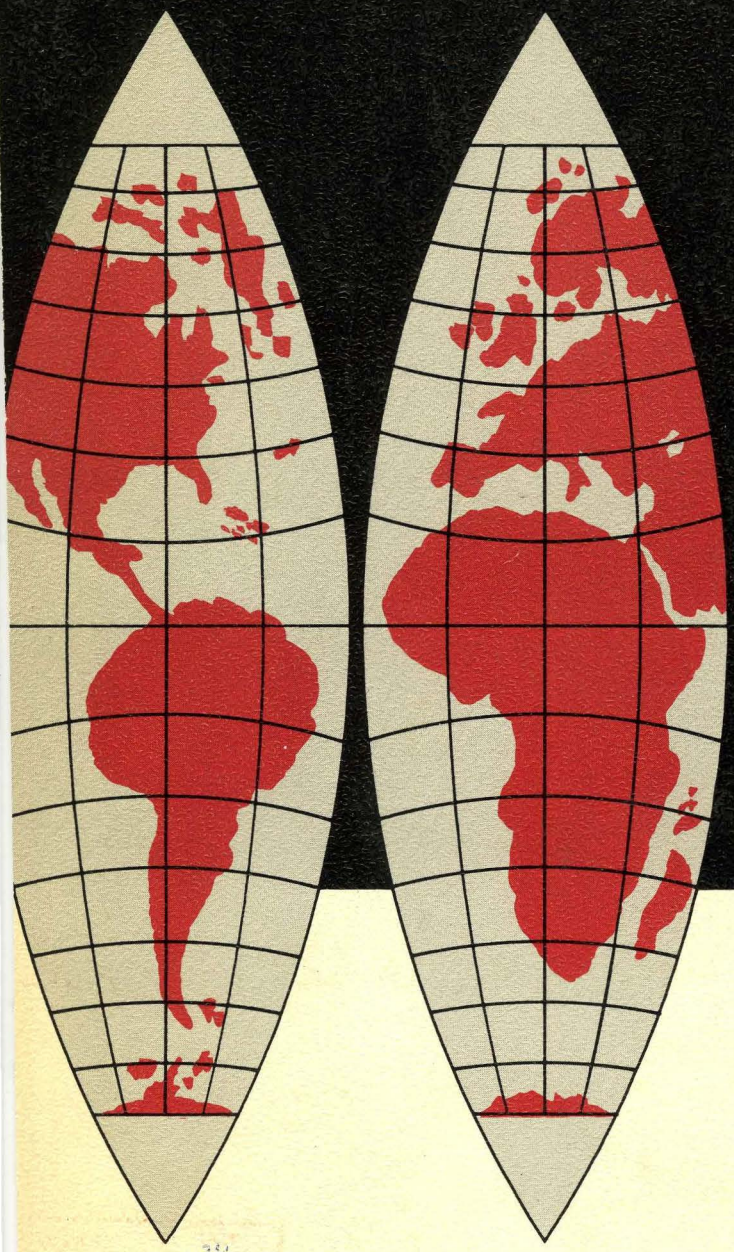

SEMICONDUCTOR

DIODE & SCR

D.A.T.A.BOOK

FALL 1971

28th EDITION

THIS D.A.T.A.BOOK VALID UNTIL SPRING 1972 EDITION

D.A.T.A. REFERENCE STANDARDS FOR INDUSTRY

20 JUL 1971

D.A.T.A. REFERENCE STANDARDS FOR INDUSTRY

SEMICONDUCTOR
DIODE & SCR
D.A.T.A.BOOK

Staff

President ..... Henry Tulchin
Vice President & Gen. Mgr. ..... Gordon Newman
Director, Operations ..... Herman Schlesinger
Director, Marketing ..... J. Paul Fischer
Data Processing Manager ..... Fred Lepow, CDP

COPYRIGHT © 1971 D.A.T.A., *Subsidiary of* COMPUTING AND SOFTWARE, INC.

32 LINCOLN AVENUE • ORANGE, N. J. 07050

Tel. 201-673-8030 • TWX 710-994-5839

FALL 1971

28TH EDITION

EDITORIAL PROCEDURES AND OBSERVATIONS

ABOUT THIS D.A.T.A.BOOK

Purpose

This **D.A.T.A.BOOK** is designed to report comprehensively on what is presently being produced (throughout the free world) in this specific component field. While a **D.A.T.A.BOOK** such as this cannot possibly provide 100% of the answers you might need, its primary aim is that of both facilitating the selection of types suitable to your technical requirements and directing you to sources of their manufacture.

Technical Data Collection

D.A.T.A. acquires and processes the information presented in this **D.A.T.A.BOOK** with the cooperation of the participating manufacturers who supply us with latest changes. Manufacturers are not charged for technical listings of their products.

JEDEC Type Numbers

For 1N, 2N and 3N types, the electrical and physical characteristics data included in this **D.A.T.A.BOOK** are those registered with JEDEC. Indicated manufacturers' types may or may not conform exactly with the registered specifications; therefore, individual manufacturers' complete specifications should be checked to determine suitability for particular requirements.

Substitute Types

This **D.A.T.A.BOOK** cannot truly claim to be an interchangeability chart; however, because of the sequencing arrangement, by characteristics, in the technical data sections, types with near-identical or similar characteristics appear together, one after the other. For the engineer, this immediate source of technical comparison is superior to, and safer than, a mere listing of possible replacement type numbers.

Price and Availability

Because of the rapid change in the Diode & SCR field, back-up, delivery, and price information should be obtained direct from the manufacturers or their local offices, as included in this D.A.T.A.BOOK. See Table of Contents.

Manufacturers' Specifications

This **D.A.T.A.BOOK** includes currently manufactured types, with their major characteristics and their manufacturers. Every effort is made to ensure the accuracy of all entries herein; however, the publisher cannot be held responsible or guarantee against the possibility of error or omission. Only the manufacturers themselves can provide you with complete technical details.

TABLE OF CONTENTS

HOW TO USE THIS D.A.T.A.BOOK — iv - vii

1. TYPE NUMBER CROSS INDEX — 2 - 164

TECHNICAL DATA SECTIONS

2. Silicon Reference Diodes — 165 - 245
   In order of ref. voltage, diss., and type no.
3. Diodes — 246 - 261
   In order of PIV, min. fwd. current V_f, and type no.
4. Switching Diodes — 262 - 291
   In order of PIV, recovery time, and type no.
5. Rectifiers — 292 - 413
   In order of PIV, max avg. forward current, temp., and type no.
6. Silicon Controlled Rectifiers — 414 - 495
   In order of PRV, max. cont. current, temp., and type no.
7. Miscellaneous Silicon PNPN Devices — 496 - 509
   In order of use, max. fwd. breakover voltage, max. reverse voltage, max. current, and type no.
8. Microwave Mixer Diodes — 510 - 516
   In order of test freq. and type no.
9. Microwave Video Detector Diodes — 517 - 518
   In order of test freq. and type no.
10. Voltage Variable Capacitors & Varactors Diodes — 519 - 565
    In order of capacitance, test voltage, and type no.
11. Tunnel Diodes — 566 - 574
    In order of peak current, max. capacitance, and type no.
12. Miscellaneous Diodes — 575 - 601
    In order of use (coded) and type number. See Symbol/Code Interpreter for explanations of use codes.

TECHNICAL DATA SECTIONS

SUPPLEMENTARY SECTIONS

14. Diodes with U. S. Military Specifications Including Qualified Manufacturers — 602 - 607
15. Outline Drawings — 608 - 718
    In assigned number order
16. Diode & SCR Manufacturers' Local Offices — 719 - 760
17. Semiconductor Mounting Hardware Availability — 761 - 765
18. Mounting Hardware Manufacturer's Local Offices — 766
19. Diode & SCR Manufacturer Codes, Names and Addresses — 767 - 769

- SYMBOL/CODE EXPLANATIONS — See Interpreter Cards At Back of Book

HOW TO USE THIS D.A.T.A.BOOK

Basic Procedure

1. Find below the "known-unknown" situation corresponding with your requirement;
2. Follow the outlined steps;
3. If the answer leads to another "known-unknown" situation, repeat 1. and 2. until all possible answers are obtained.

NOTE:
Each section of the D.A.T.A.BOOK is organized in a distinct sequence, as indicated at the top of each page.

1ST	**KNOWN:** Electrical and Mechanical Requirements **UNKNOWN:** Suitable Type Number(s) a. Turn to Technical Data Section coinciding with your general requirements. (Breakdown of the twelve technical sections, and page numbers, is provided in Table of Contents.) b. By checking the order of listing at the top of each page, you will be able quickly to locate those types most closely fitting your requirements. The drawing number referenced at end of each technical data line will be found in Outline Drawings, Section 15, in drawing number order. c. To ascertain manufacturers of selected type numbers, see "2nd known-unkown situation below.
2ND	**KNOWN:** Type Number **UNKNOWN:** Manufacturer(s), Address, Local Office a. Turn to Type No. Cross Index, Section 1 (in type number order). b. The manufacturers (coded) are shown for each type number. c. Manufacturers' names, in code order, are listed at back of D.A.T.A.BOOK, (with addresses).
3RD	**KNOWN:** Type Number **UNKNOWN:** Its Characteristics a. Turn to Type No. Cross Index, Section 1 (in type number order). b. Opposite each type number is the page and line number, which is significant only for locating the technical data. Page and line numbers can change from issue to issue o f the D.A.T.A.BOOK. c. Turn to the pertinent page and line number in the Technical Data Sections. In addition to the electrical data, the drawing number referenced at the end of the technical data line will be found in Outline Drawings, Section 15, in drawing number order.
4TH	**KNOWN:** Type Number **UNKNOWN:** Equivalents or Similar Types a. Follow through "3rd known-unknown" situation above. . . and b. Survey characteristics of types immediately above and below that line number to determine which type numbers might fill your need. c. To ascertain manufacturers of suitable type numbers, see "2nd known-unknown" situation above.
5TH	**KNOWN:** Type Number **UNKNOWN:** Case and Dimensions a. Follow through "3rd known-unknown" situation above.
6TH	**KNOWN:** Military Requirement **UNKNOWN:** Suitable Type Number(s) with MIL Specs. a. Turn to the Technical Data Section coinciding with your general military requirements. (Breakdown of the twelve technical sections, and page numbers, is provided in Table of Contents.) b. By checking the order of listing at the top of each page, you will be able quickly to locate those military types (prefixed by USAF, USA, USN, or JAN) most closely fitting the requirements. In addition to the electrical data, the drawing number referenced at the end of the technical data line will be found in Outline Drawings, Section 15, in drawing number order. c. To ascertain qualified manufacturers of type numbers under consideration, turn to Types with U.S. MIL Specs., Section 14, (coded) where types are listed in type number order, giving manufacturers and MIL Spec. number. d. Manufacturer codes are explained at back of D.A.T.A.BOOK (with addresses).
7TH	**KNOWN:** Type Number with MIL Specs. **UNKNOWN:** Qualified Manufacturer(s) and/or MIL Spec. Number a. Turn to Types with U.S. Military Specifications, Section 14, where opposite each type number are the qualified manufacturers (coded) and the MIL Spec. number. b. Manufacturer codes are explained at back of D.A.T.A.BOOK (with addresses).

HOW A FAMILY OF TYPES AND DATA ARE LISTED IN SECTIONS 2 AND 10

2. SILICON REFERENCE DIODES

The basic type number and the suffixes representing the various tolerances are given in the type number column. The corresponding tolerances are indicated in the tolerance column either by X marks under the applicable heading or by the listing of the actual percentage. In some cases, it is necessary to use two or more lines to depict a family or series, each having a separate line number.

EXAMPLES

LINE No.	3 TYPE No.	TOLERANCE 20	10	5	2 ± (%)
1	1.5R39,A,B	xxx			
2	1.5Z39,A,B,C				xxx1
3	1N3803,A,B	xxx			
4	1N4479			5	
5	JAN1N4479		10		
6	JAN1N4972			5	

EXPLANATION OF EXAMPLES

Actual Type Nos. and Tolerances

Line 1: 1.5R39(20%), 1.5R39A(10%), 1.5R39B(5%)
Line 2: 1.5Z39(20%), 1.5Z39A(10%)
1.5Z39B(5%), 1.5Z39C(1%)
Line 3: 1N3803(20%) 1N3803A(10%), 1N3803B(5%)
Line 4: 1N4479(5%)
Line 5: JAN1N4479(10%)
Line 6: JAN1N4972(5%)

10. VOLTAGE VARIABLE CAPACITORS AND VARACTOR DIODES

Two families or series are found in this section. One of these groups consists of types which are identical for min. cutoff frequency; the other group is composed of types which are identical except for capacitance range. In either case the values given correspond in sequence to the basic type number and its suffices. In some cases, it is necessary to use two or more lines to depict the series; however, only one line number is assigned.

EXAMPLES

LINE No.	3 TYPE No.	MINIMUM CUTOFF FREQUENCY (Corresponding to Type Numbers in previous column) (Hz)	(Hz)	(Hz)	(Hz)	(Hz)	(Hz)	TYP. CAP. 1 CAP. Cj (F)	2 at TEST VOLT (V)	CAPACITANCE RANGE (for V = 0 to PIV) ϕ - at TEST VOLT. (pF)
1	PL0510A,B-F	30G	40G	50G	60G	70G	80G	250f	6.0	.10-.40ϕ
22	MV12,A							12p	4.0	±2.4,±1.2ϕ

EXPLANATION OF EXAMPLES

Actual Type Nos. and Tolerances

Line 1: PL0510A(30GHz), PL0510B(40GHz)
PL0510C(50GHz), PL0510D(60GHz)
PL0510E(70GHz), PL0510F(80GHz)

Line 2: MV12(12±2.4pf), MV12A(12±1.2pf)

HOW TYPE NUMBERS ARE SEQUENCED IN THE TYPE No. CROSS INDEX

Type numbers are listed in numeric-alphabetic sequence; i.e. type numbers beginning with a number (decimal, fraction, or whole) precede type numbers beginning with a letter.

EXPLANATION AND EXAMPLES

1. Decimals and fractions precede whole numbers. An equivalent decimal precedes the fraction when the remainder of type number is identical.	.25Z15D 1/4Z15D 3/4M12Z 1T3
2. Zeros are ignored in sequencing except when the zero is the only basis for distinguishing one type number from another. In this case the type number containing the zero is listed first.	0112 112 0113 00115 AP01 AP1 AP02
3. Number and/or letter groupings preceding hyphens or slashes are the controlling factors in sequencing. The hyphens and slashes themselves precede any identically positioned letters also having the same beginning number/letter groupings.	66-0706 66M1 70/10 70A9
4. Identical type numbers representing devices with different characteristics are listed in order of manufacturer letter code.	TD6 △ GESY TD6 ⧄ GIC
5. A military prefix (USA, USAF, USN, JAN) is ignored in the numeric-alphabetic sequencing of type numbers. A military type number directly follows its equivalent JEDEC type number provided that the sequencing data are identical.	1N645 JAN 1N645

HOW UNITS OF MEASURE ARE PRESENTED IN THIS D.A.T.A.BOOK

The basic unit, for each column heading in the technical data sections, is the one most applicable in tabulating that parameter. There are exceptions, however, which require the use of space-saving "suffix indicators," as explained below.

1. Since the column heading indicates a basic unit only, a "suffix indicator" may be added to the technical data presented in the column. The "suffix indicator" modifies the basic unit in accordance with established engineering practices.

EXAMPLES:

Column Heading	Data if Based on Column Heading	Space-saving Listing Technique	Meaning
A	0.003	3.0m	3 milliamperes
Hz	5,000	5.0k	5 kilohertz
Ohms	9,000,000	9.0M	9 megaohms
Sec.	0.000007	7.0μ	7 microseconds

See box below for prefixes and symbols

PREFIXES & SYMBOLS Indicating Powers of Ten — Recommended by International Committee on Weights and Measures Adopted by National Bureau of Standards

Power	Prefix	Symbol	Power	Prefix	Symbol	Power	Prefix	Symbol
10^{12}	tera	T	10	deka	da	10^{-9}	nano	n
10^{9}	giga	G	10^{-1}	deci	d	10^{-12}	pico	p
10^{6}	mega	M	10^{-2}	centi	c	10^{-15}	femto	f
10^{3}	kilo	k	10^{-3}	milli	m	10^{-18}	atto	a
10^{2}	hecto	h	10^{-6}	micro	μ			

1. TYPE No. CROSS INDEX

IN TYPE NUMBER SEQUENCE

TYPE No.	MFRS	Pg&Line
1/4A6.8,A,B	ASC	176-204
1/4A7.5,A,B	ASC	179- 39
1/4A8 2,A,B	ASC	181- 91
1/4A9 1,A,B	ASC	185- 1
1/4A10,A,B	ASC	187- 84
1/4A11,A,B	ASC	189-131
1/4A12,A,B	ASC	191-168
1/4A13,A,B	ASC	194- 66
1/4A14,A,B	ASC	196- 17
1/4A15,A,B	ASC	197- 7
1/4A16,A,B	ASC	199- 17
1/4A17,A,B	ASC	200-164
1/4A18,A,B	ASC	201- 90
1/4A19,A,B	ASC	203-104
1/4A20,A,B	ASC	204- 72
1/4A22,A,B	ASC	206- 39
1/4A24,A,B	ASC	208- 43
1/4A25,A,B	ASC	209-182
1/4A27,A,B	ASC	210-109
1/4A30,A,B	ASC	212-147
1/4A33,A,B	ASC	214- 96
1/4A36,A,B	ASC	216- 62
1/4A39,A,B	ASC	217-137
1/4A43,A,B	ASC	219- 42
1/4A45,A,B	ASC	220- 80
1/4A47,A,B	ASC	220-163
1/4A50,A,B	ASC	222- 49
1/4A52,A,B	ASC	223-144
1/4A56,A,B	ASC	224- 13
1/4A62,A,B	ASC	225-153
1/4A68,A,B	ASC	227- 21
1/4A75,A,B	ASC	228-123
1/4A82,A,B	ASC	230- 21
1/4A91,A,B	ASC	231-146
1/4A100,A,B	ASC	232-193
1/4A105,A,B	ASC	234- 63
1/4A110,A,B	ASC	234-140
1/4A120,A,B	ASC	236- 1
1/4A130,A,B	ASC	237- 45
1/4A140,A,B	ASC	238- 63
1/4A150,A,B	ASC	239- 14
1/4A175,A,B	ASC	241- 83
1/4A200,A,B	ASC	243- 27
1/4M2 4AZ,10,5		165-151
♦	MOTA	
1/4M2 7AZ,10,5		166- 11
♦	MOTA	
1/4M3 0AZ,10,5		166- 78
♦	MOTA	
1/4M3 3AZ,10,5		166-156
♦	MOTA	
1/4M3 6AZ,10,5		167-113
♦	MOTA	
1/4M3 9AZ,10,5		168- 65
♦	MOTA	
1/4M4 3AZ,10,5		169- 60
♦	MOTA	
1/4M4 7AZ,10,5		170- 49
♦	MOTA	
1/4M5 1AZ,10,5		171- 95
♦	MOTA	
1/4M5 6AZ,10,5		172-108
♦	MOTA	
1/4M6 2AZ,10,5		174- 80
♦	MOTA	
1/4M6 8AZ,10,5		176-205
♦	MOTA	
1/4M6 8Z,10,5		176-206
♦	MOTA	
1/4M7 5Z,10,5		179- 40
♦	MOTA	
1/4M8 2Z,10,5		181- 92
♦	MOTA	
1/4M9 1Z,10,5		185- 2
♦	MOTA	
1/4M10Z,10,	5♦ MOTA	187- 85
1/4M11Z,10,	5♦ MOTA	189-132
1/4M12Z,10,	5♦ MOTA	191-169
1/4M13Z,10,	5♦ MOTA	194- 67
1/4M14Z,10,	5♦ MOTA	196- 18
1/4M15Z,10,	5♦ MOTA	197- 8
1/4M16Z,10,	5♦ MOTA	199- 18
1/4M17Z,10,	5♦ MOTA	200-165
1/4M18Z,10,	5♦ MOTA	201- 91
1/4M19Z,10,	5♦ MOTA	203-105
1/4M20Z,10,	5♦ MOTA	204- 73
1/4M22Z,10,	5♦ MOTA	206- 40
1/4M24Z,10,	5♦ MOTA	208- 44
1/4M25Z,10,	5♦ MOTA	209-183
1/4M27Z,10,	5♦ MOTA	210-110
1/4M30Z,10,	5♦ MOTA	212-148
1/4M33Z,10,	5♦ MOTA	214- 97
1/4M36Z,10,	5♦ MOTA	216- 63
1/4M39Z,10,	5♦ MOTA	217-138
1/4M43Z,10,	5♦ MOTA	219- 43
1/4M45Z,10,	5♦ MOTA	220- 81
1/4M47Z,10,	5♦ MOTA	220-164
1/4M50Z,10,	5♦ MOTA	222- 50
1/4M51Z,10,	5♦ MOTA	222-124
1/4M52Z,10,	5♦ MOTA	223-145
1/4M56Z,10,	5♦ MOTA	224- 14
1/4M62Z,10,	5♦ MOTA	225-154
1/4M68Z,10,	5♦ MOTA	227- 22
1/4M75Z,10,	5♦ MOTA	228-124
1/4M82Z,10,	5♦ MOTA	230- 22
1/4M91Z,10,	5♦ MOTA	231-147
1/4M100Z,10,5		233- 1
♦	MOTA	
1/4M105Z,10,5		234- 64
♦	MOTA	
1/4M110Z,10,5		234-141
♦	MOTA	
1/4M120Z,10,5		236- 2
♦	MOTA	

TYPE No.	MFRS	Pg&Line
1/4M130Z,10,5		237- 46
♦	MOTA	
1/4M140Z,10,5		238- 64
♦	MOTA	
1/4M150Z,10,5		239- 15
♦	MOTA	
1/4M160Z,10,5	MOTA	240- 52
1/4M175Z,10,5		241- 84
♦	MOTA	
1/4M180Z,10,5		241-148
♦	MOTA	
1/4M200Z,10,5		243- 28
♦	MOTA	
.25N6 8	TNC	176-207
25N7 5	TNC	179- 41
.25N8.2	TNC	181- 93
25N9 1	TNC	185- 3
.25N10	TNC	187- 86
.25N11	TNC	189-133
.25N12	TNC	191-170
.25N13	TNC	194- 68
.25N14	TNC	196- 19
25N15	TNC	197- 9
25N16	TNC	199- 19
25N17	TNC	200-166
.25N18	TNC	201- 92
.25N19	TNC	203-106
.25N20	TNC	204- 74
25N22	TNC	206- 41
25N24	TNC	208- 45
.25N25	TNC	209-184
.25N27	TNC	210-111
.25N30	TNC	212-149
25N33	TNC	214- 98
.25N36	TNC	216- 64
25N39	TNC	217-139
25N43	TNC	219- 44
25N45	TNC	220- 82
.25N47	TNC	220-165
25N50	TNC	222- 51
.25N52	TNC	223-146
.25N56	TNC	224- 15
25N62	TNC	225-155
25N68	TNC	227- 23
25N75	TNC	228-125
25N82	TNC	230- 23
.25N91	TNC	231-148
25N100	TNC	233- 2
25N105	TNC	234- 65
.25N110	TNC	234-142
25N120	TNC	236- 3
25N130	TNC	237- 47
.25N140	TNC	238- 65
25N150	TNC	239- 16
25N175	TNC	241- 85
25N200	TNC	243- 29
4M1.36FR2	♦ MOTA	165- 58
4M1 36FR5	♦ MOTA	165- 59
4M2.04FR2	♦ MOTA	165-123
4M2.04FR5	♦ MOTA	165-124
4M.64FR10/1N816		165- 16
♦	MOTA	
5E1	PWC	299- 65
.5E2	PWC	310- 28
5E3	PWC	320- 83
5E4	PWC	328- 95
5E05	PWC	293- 29
5E5	PWC	339- 47
.5E6	PWC	346- 40
5E7	PWC	355- 23
5E8	PWC	359- 50
5E10	PWC	369-105
5E12	PWC	377- 80
.5J1	PWC	299- 66
5J2	PWC	310- 29
.5J3	PWC	320- 84
.5J4	PWC	328- 96
5J05	PWC	293- 30
5J5	PWC	339- 48
5J6	PWC	346- 41
5J7	PWC	355- 24
5J8	PWC	359- 51
.5J10	PWC	369-106
.5J12	PWC	377- 81
1/2Z3.3T5	TEC	167- 27
1/2Z3 6T5	TEC	167-176
1/2Z3 9T5	TEC	168-129
1/2Z4 3T5	TEC	169-128
1/2Z4.7T5	TEC	170-128
1/2Z5.1T5	TEC	171-173
1/2Z5.6T5	TEC	173- 37
1/2Z6 2T5	TEC	175- 11
1/2Z6.8T5	TEC	177-107
1/2Z7 5T5	TEC	179-156
1/2Z8.2T5	TEC	182- 22
1/2Z9.1T5	TEC	185-135
1/2Z10T5	TEC	188- 21
1/2Z11T5	TEC	190- 32
1/2Z12T5	TEC	192- 90
1/2Z13T5	TEC	194-158
1/2Z15T5	TEC	197-110
1/2Z16T5	TEC	199-109
1/2Z18T5	TEC	202- 17
1/2Z20T5	TEC	204-162
1/2Z22T5	TEC	206-131
1/2Z24T5	TEC	208-126
1/2Z27T5	TEC	211- 14
1/2Z30T5	TEC	213- 28
1/2Z33T5	TEC	214-171
1/2Z36T5	TEC	216-114
1/2Z39T5	TEC	218- 7
1/2Z43T5	TEC	219- 92
1/2Z47T5	TEC	221- 22
1/2Z51T5	TEC	222-166

TYPE No.	MFRS	Pg&Line
1/2Z56T5	TEC	224- 58
1/2Z62T5	TEC	226- 15
1/2Z68T5	TEC	227- 67
1/2Z75T5	TEC	228-167
1/2Z82T5	TEC	230- 62
1/2Z91T5	TEC	232- 9
1/2Z100T5	TEC	233- 41
7E1	PWC	300- 18
.7E2	PWC	310-105
7E3	PWC	321- 26
7E4	PWC	329- 79
.7E05	PWC	293- 70
.7E5	PWC	340- 2
7E6	PWC	347- 3
.7E7	PWC	355- 51
7E8	PWC	360- 3
7E10	PWC	370- 48
7E12	PWC	377-106
7J1	PWC	300- 19
7J2	PWC	310-106
7J3	PWC	321- 27
.7J4	PWC	329- 80
7J05	PWC	293- 71
.7J5	PWC	340- 3
7J6	PWC	347- 4
7J7	PWC	355- 52
7J8	PWC	360- 4
7J10	PWC	370- 49
7J12	PWC	377-107
7JZ6.8	PWC	177-131
.7JZ7 5	PWC	179-178
.7JZ8 2	PWC	182- 45
.7JZ9.1	PWC	185-157
.7JZ10	PWC	188- 48
.7JZ11	PWC	190- 49
7JZ12	PWC	192-116
7JZ13	PWC	194-176
7JZ14	PWC	196- 67
7JZ15	PWC	197-134
.7JZ16	PWC	199-127
.7JZ17	PWC	201- 20
.7JZ18	PWC	202- 41
7JZ19	PWC	203-157
7JZ20	PWC	204-180
.7JZ22	PWC	206-154
7JZ24	PWC	208-145
7JZ25	PWC	210- 29
7JZ27	PWC	211- 37
.7JZ30	PWC	213- 46
7JZ33	PWC	215- 10
7JZ36	PWC	216-123
.7JZ39	PWC	218- 20
7JZ43	PWC	219-101
7JZ45	PWC	220- 83
.7JZ47	PWC	221- 35
7JZ50	PWC	222- 52
7JZ51	PWC	222-173
7JZ52	PWC	223-147
.7JZ56	PWC	224- 66
.7JZ62	PWC	226- 21
.7JZ68	PWC	227- 74
.7JZ75	PWC	228-172
7JZ82	PWC	230- 71
7JZ91	PWC	232- 14
7JZ100	PWC	233- 49
7JZ105	PWC	234- 92
.7JZ110	PWC	235- 22
.7JZ120	PWC	236- 45
.7JZ130	PWC	237- 85
.7JZ140	PWC	238- 98
.7JZ150	PWC	239- 58
7JZ160	PWC	240- 90
7JZ175	PWC	241-111
7JZ180	PWC	242- 26
7JZ200	PWC	243- 68
7JZ220	PWC	244- 31
7Z6 8,A,B,D	PWC	177-132
7Z6 8C	PWC	177-133
.7Z7.5,A,B,D	PWC	179-179
7Z7 5C	PWC	179-180
7Z8.2,A,B,D	PWC	182- 46
7Z8 2C	PWC	182- 47
7Z9 1,A,B,D	PWC	185-158
7Z9.1C	PWC	185-159
7Z10,A,B,D	PWC	188- 49
7Z10C	PWC	188- 50
7Z11,A,B,D	PWC	190- 50
7Z11C	PWC	190- 51
7Z12,A,B,D	PWC	192-117
7Z12C	PWC	192-118
7Z13,A,B,D	PWC	194-177
7Z13C	PWC	194-178
7Z14,A,B,D	PWC	196- 68
7Z14C	PWC	196- 69
7Z15,A,B,D	PWC	197-135
7Z15C	PWC	197-136
7Z16,A,B,D	PWC	199-128
7Z16C	PWC	199-129
7Z17,A,B,D	PWC	201- 21
7Z17C	PWC	201- 22
7Z18,A,B,D	PWC	202- 42
7Z18C	PWC	202- 43
.7Z19,A,B,D	PWC	203-158
7Z19C	PWC	203-159
7Z20,A,B,D	PWC	204-181
7Z20C	PWC	204-182
7Z22,A,B,D	PWC	206-155
7Z22C	PWC	206-156
7Z24,A,B,D	PWC	208-146
7Z24C	PWC	208-147
7Z25,A,B,D	PWC	210- 30
7Z25C	PWC	210- 31
7Z27,A,B,D	PWC	211- 38
7Z27C	PWC	211- 39

TYPE No.	MFRS	Pg&Line
.7Z30,A,B,D	PWC	213- 47
7Z30C	PWC	213- 48
7Z33,A,B,D	PWC	215- 11
.7Z33C	PWC	215- 12
.7Z36,A,B,D	PWC	216-124
7Z36C	PWC	216-125
.7Z39,A,B,D	PWC	218- 21
.7Z39C	PWC	218- 22
7Z43,A,B,D	PWC	219-102
.7Z43C	PWC	219-103
.7Z45,A,B,D	PWC	220- 84
7Z45C	PWC	220- 85
.7Z47,A,B,D	PWC	221- 36
.7Z47C	PWC	221- 37
.7Z50,A,B,D	PWC	222- 53
.7Z50C	PWC	222- 54
.7Z51,A,B,D	PWC	222-174
.7Z51C	PWC	222-175
.7Z52,A,B,D	PWC	223-148
.7Z52C	PWC	223-149
.7Z56,A,B,D	PWC	224- 67
.7Z56C	PWC	224- 68
.7Z62,A,B,D	PWC	226- 22
.7Z62C	PWC	226- 23
.7Z68,A,B,D	PWC	227- 75
.7Z68C	PWC	227- 76
.7Z75,A,B,D	PWC	228-173
.7Z75C	PWC	228-174
.7Z82,A,B,D	PWC	230- 72
.7Z82C	PWC	230- 73
.7Z91,A,B,D	PWC	232- 15
7Z91C	PWC	232- 16
7Z100,A,B,D	PWC	233- 50
7Z100C	PWC	233- 51
.7Z105,A,B,D	PWC	234- 93
.7Z105C	PWC	234- 94
.7Z110,A,B,D	PWC	235- 23
.7Z110C	PWC	235- 24
.7Z120,A,B,D	PWC	236- 46
7Z120C	PWC	236- 47
.7Z130,A,B,D	PWC	237- 86
7Z130C	PWC	237- 87
.7Z140,A,B,D	PWC	238- 99
.7Z140C	PWC	238-100
7Z150,A,B,D	PWC	239- 59
.7Z150C	PWC	239- 60
.7Z160,A,B,D	PWC	240- 91
.7Z160C	PWC	240- 92
.7Z175,A,B,D	PWC	241-112
.7Z175C	PWC	241-113
.7Z180,A,B,D	PWC	242- 27
7Z180C	PWC	242- 28
.7Z200,A,B,D	PWC	243- 69
.7Z200C	PWC	243- 70
.7Z220,A,B,D	PWC	244- 32
7Z220C	PWC	244- 33
.7ZM6.8,A,B,D	PWC	177-134
.7ZM6.8C	PWC	177-135
.7ZM7.5,A,B,D	PWC	180- 1
.7ZM7 5C	PWC	180- 2
.7ZM8 2,A,B,D	PWC	182- 48
.7ZM8 2C	PWC	182- 49
7ZM9 1,A,B,D	PWC	185-160
.7ZM9.1C	PWC	185-161
.7ZM10,A,B,D	PWC	188- 51
7ZM10C	PWC	188- 52
.7ZM11,A,B,D	PWC	190- 52
.7ZM11C	PWC	190- 53
.7ZM12,A,B,D	PWC	192-119
7ZM12C	PWC	192-120
.7ZM13,A,B,D	PWC	194-179
.7ZM13C	PWC	194-180
.7ZM14,A,B,D	PWC	196- 70
.7ZM14C	PWC	196- 71
.7ZM15,A,B,D	PWC	197-137
.7ZM15C	PWC	197-138
7ZM16,A,B,D	PWC	199-130
.7ZM16C	PWC	199-131
.7ZM17,A,B,D	PWC	201- 23
.7ZM17C	PWC	201- 24
.7ZM18,A,B,D	PWC	202- 44
.7ZM18C	PWC	202- 45
.7ZM19,A,B,D	PWC	203-160
7ZM19C	PWC	203-161
.7ZM20,A,B,D	PWC	204-183
7ZM20C	PWC	204-184
.7ZM22,A,B,D	PWC	206-157
7ZM22C	PWC	206-158
7ZM24,A,B,D	PWC	208-148
7ZM24C	PWC	208-149
.7ZM25,A,B,D	PWC	210- 32
.7ZM25C	PWC	210- 33
7ZM27,A,B,D	PWC	211- 40
.7ZM27C	PWC	211- 41
7ZM30,A,B,D	PWC	213- 49
7ZM30C	PWC	213- 50
7ZM33,A,B,D	PWC	215- 13
7ZM33C	PWC	215- 14
7ZM36,A,B,D	PWC	216-126
.7ZM36C	PWC	216-127
.7ZM39,A,B,D	PWC	218- 23
.7ZM39C	PWC	218- 24
7ZM43,A,B,D	PWC	219-104
7ZM43C	PWC	219-105
.7ZM45,A,B,D	PWC	220- 86
.7ZM45C	PWC	220- 87
7ZM47,A,B,D	PWC	221- 38
.7ZM47C	PWC	221- 39
7ZM50,A,B,D	PWC	222- 55
.7ZM50C	PWC	222- 56
7ZM51,A,B,D	PWC	222-176
7ZM51C	PWC	222-177
7ZM52,A,B,D	PWC	223-150
7ZM52C	PWC	223-151

TYPE No.	MFRS	Pg&Line
.7ZM56,A,B,D	PWC	224- 69
.7ZM56C	PWC	224- 70
.7ZM62,A,B,D	PWC	226- 24
.7ZM62C	PWC	226- 25
.7ZM68,A,B,D	PWC	227- 77
.7ZM68C	PWC	227- 78
.7ZM75,A,B,D	PWC	228-175
.7ZM75C	PWC	228-176
.7ZM82,A,B,D	PWC	230- 74
.7ZM82C	PWC	230- 75
.7ZM91,A,B,D	PWC	232- 17
.7ZM91C	PWC	232- 18
.7ZM100,A,B,D	PWC	233- 52
.7ZM100C	PWC	233- 53
.7ZM105,A,B,D	PWC	234- 95
.7ZM105C	PWC	234- 96
.7ZM110,A,B,D	PWC	235- 25
.7ZM110C	PWC	235- 26
.7ZM120,A,B,D	PWC	236- 48
.7ZM120C	PWC	236- 49
.7ZM130,A,B,D	PWC	237- 88
.7ZM130C	PWC	237- 89
.7ZM140,A,B,D	PWC	238-101
.7ZM140C	PWC	238-102
.7ZM150,A,B,D	PWC	239- 61
.7ZM150C	PWC	239- 62
.7ZM160,A,B,D	PWC	240- 93
.7ZM160C	PWC	240- 94
.7ZM175,A,B,D	PWC	241-114
7ZM175C	PWC	241-115
.7ZM180,A,B,D	PWC	242- 29
.7ZM180C	PWC	242- 30
.7ZM200,A,B,D	PWC	243- 71
.7ZM200C	PWC	243- 72
.7ZM220,A,B,D	PWC	244- 34
7ZM220C	PWC	244- 35
1A6 8M,A,B	♦ ASC	177-143
1A7 5M,A,B	♦ ASC	180- 12
1A8.2M,A,B	♦ ASC	182- 57
1A9.1M,A,B	♦ ASC	185-168
1A10M,A,B	♦ ASC	188- 63
1A11M,A,B	♦ ASC	190- 62
1A12M,A,B	♦ ASC	192-131
1A13M,A,B	♦ ASC	195- 1
1A15M,A,B	♦ ASC	197-149
1A16M,A,B	♦ ASC	199-141
1A18M,A,B	♦ ASC	202- 56
1A20M,A,B	♦ ASC	205- 10
1A22M,A,B	♦ ASC	206-168
1A24M,A,B	♦ ASC	208-159
1A27M,A,B	♦ ASC	211- 49
1A30M,A,B	♦ ASC	213- 57
1A33M,A,B	♦ ASC	215- 20
1A36M,A,B	♦ ASC	216-133
1A39M,A,B	♦ ASC	218- 30
1A43M,A,B	♦ ASC	219-111
1A47M,A,B	♦ ASC	221- 45
1A51M,A,B	♦ ASC	223- 2
1A52	HAFO	165-160
1A53	HAFO	166- 24
1A54	HAFO	166- 95
1A55	HAFO	166-173
1A56	HAFO	167-129
1A56M,A,B	♦ ASC	224- 75
1A57	HAFO	168- 83
1A58	HAFO	169- 83
1A59	HAFO	170- 75
1A60	HAFO	171-122
1A61	HAFO	172-162
1A62	HAFO	174-139
1A62M,A,B	♦ ASC	226- 30
1A68M,A,B	♦ ASC	227- 83
1A75M,A,B	♦ ASC	229- 2
1A82M,A,B	♦ ASC	230- 80
1A91M,A,B	♦ ASC	232- 23
1A100M,A,B	♦ ASC	233- 58
1A110M,A,B	♦ ASC	235- 31
1A120M,A,B	♦ ASC	236- 54
1A130M,A,B	♦ ASC	237- 94
1A150M,A,B	♦ ASC	239- 67
1A160M,A,B	♦ ASC	240- 99
1A180M,A,B	♦ ASC	242- 35
1A200M,A,B	♦ ASC	243- 77
1AS027	TIIB	361- 47
TIID	TIIF	
1AS029	TIIB	371- 79
TIID	TIIF	
1AU601	PHIL	598- 8
1AU601A	PHIL	598- 9
1AU601B	PHIL	598- 10
1B1	PWC	300- 96
1B2	PWC	311- 83
1B4	PWC	330- 65
1B05	PWC	294- 11
1B05J05	TIID	250- 63
1B05J10	TIID	254- 36
	TIIF	
1B05J20	TIID	257- 52
	TIIF	
1B05J40	TIID	259- 68
	TIIF	
1B6	PWC	347- 92
1B08T05	TIID	250- 67
	TIIF	
1B08T10	TIID	254- 41
	TIIF	
1B08T20	TIID	257- 57
	TIIF	
1B08T40	TIID	259- 73
	TIIF	
1B08T60	TIID	260- 18
	TIIF	
1B08T80	TIID	260- 48
	TIIF	

△-Registered with JEDEC by this manufacturer

♦-Copy of mfr's data sheet may be ordered from D.A.T.A.

1. TYPE No. CROSS INDEX

IN TYPE NUMBER SEQUENCE

TYPE No.	MFRS	Pg&Line
1B8	PWC	360- 75
1B10	PWC	371- 3
1B12	PWC	378- 32
1B14	PWC	382- 21
1B16	PWC	386- 28
1B18	PWC	388- 26
1B20	PWC	390- 29
1B20K05	TIID	250- 68
	TIIF	
1B20K10	TIID	254- 42
	TIIF	
1B20K20	TIID	257- 59
	TIIF	
1B20K40	TIID	259- 75
	TIIF	
1B20K60	TIID	260- 20
	TIIF	
1B20K80	TIID	260- 50
	TIIF	
1B40K05	TIID	250- 70
	TIIF	
1B40K10	TIID	254- 44
	TIIF	
1B40K20	TIID	257- 62
	TIIF	
1B40K40	TIID	259- 77
	TIIF	
1B40K60	TIID	260- 22
	TIIF	
1B40K80	TIID	260- 52
	TIIF	
1B100M05	TIID	250- 72
	TIIF	
1B100M10	TIID	254- 46
	TIIF	
1B100M20	TIID	257- 64
	TIIF	
1B100M30	TIID	258-106
	TIIF	
1B100M40	TIID	259- 79
	TIIF	
1B100M60	TIID	260- 24
	TIIF	
1B100M80	TIID	260- 54
	TIIF	
1C1	PWC	300- 97
1C2Ø	PWC	311- 84
1C4Ø	PWC	330- 66
1C05	PWC	294- 12
1C6Ø	PWC	347- 93
1C8Ø	PWC	360- 76
1C10Ø	PWC	371- 4
1C12Ø	PWC	378- 33
1C14	PWC	382- 22
1C16	PWC	386- 29
1C18	PWC	388- 27
1C20	PWC	390- 30
1D1	PWC	301- 12
1D2	PWC	312- 10
1D3 3A,B	DII	167- 43
1D3 6A,B	DII	168- 1
1D3 9A,B	DII	168-149
1D4	PWC	330-101
1D4 3A,B	DII	169-147
1D4 7A,B	DII	170-153
1D5 1A,B	DII	171-193
1D5.6A,B	DII	173- 63
1D6	PWC	348- 19
1D6 2A,B	DII	175- 37
1D8	PWC	361- 1
1D10	PWC	371- 36
1D14	PWC	382- 23
1D16	PWC	386- 30
1D18	PWC	388- 29
1D20	PWC	390- 32
1E1	PWC	300- 98
1E2	PWC	311- 85
1E6 8Z,10,5	CODI	177-144
1E7 5Z,10,5	CODI	180- 13
1E8 2Z,10,5	CODI	182- 58
1E9 1Z,10,5	CODI	185-169
1E10Z,10,5	CODI	188- 64
1E11Z,10,5	CODI	190- 63
1E12Z,10,5	CODI	192-132
1E13Z,10,5	CODI	195- 2
1E14Z,10,5	CODI	196- 75
1E15Z,10,5	CODI	197-150
1E16Z,10,5	CODI	199-142
1E17Z,10,5	CODI	201- 28
1E18Z,10,5	CODI	202- 57
1E19Z,10,5	CODI	203-166
1E20Z,10,5	CODI	205- 11
1E22Z,10,5	CODI	206-169
1E24Z,10,5	CODI	208-160
1E25Z,10,5	CODI	210- 34
1E27Z,10,5	CODI	211- 50
1E30Z,10,5	CODI	213- 58
1E33Z,10,5	CODI	215- 21
1E36Z,10,5	CODI	216-134
1E39Z,10,5	CODI	218- 31
1E43Z,10,5	CODI	219-112
1E45Z,10,5	CODI	220- 88
1E47Z,10,5	CODI	221- 46
1E50Z,10,5	CODI	222- 57
1E51Z,10,5	CODI	223- 3
1E52Z,10,5	CODI	223-152
1E56Z,10,5	CODI	224- 76
1E62Z,10,5	CODI	226- 31
1E68Z,10,5	CODI	227- 84
1E75Z,10,5	CODI	229- 3
1E82Z,10,5	CODI	230- 81
1E91Z,10,5	CODI	232- 24
1E100Z,10,5	CODI	233- 59
1E110Z,10,5	CODI	235- 32

TYPE No.	MFRS	Pg&Line
1E120Z,10,5	CODI	236- 55
1E130Z,10,5	CODI	237- 95
1E150Z,10,5	CODI	239- 68
1E160Z,10,5	CODI	240-100
1E180Z,10,5	CODI	242- 36
1E200Z,10,5	CODI	243- 78
1F1	PWC	301- 29
1F2	PWC	312- 29
1F3	PWC	322- 2
1F4	PWC	331- 10
1F05	PWC	294- 40
1F6	PWC	348- 36
1F8	PWC	361- 13
1F10	PWC	371- 48
1F12	PWC	378- 40
1F20	PWC	390- 31
1G8	AEIL	300- 20
1HY40	♦INRI	329- 42
1HY50	♦INRI	339- 87
1HY80	♦INRI	359- 90
1HY100	♦INRI	370- 31
1M9 1Z,10,5	♦MOTA	185-170
1M10Z,10,5	♦MOTA	188- 65
1M11Z,10,5	♦MOTA	190- 64
1M12Z,10,5	♦MOTA	192-133
1M13Z,10,5	♦MOTA	195- 3
1M14Z,10,5	MOTA	196- 76
1M15Z,10,5	♦MOTA	197-151
1M16Z,10,5	♦MOTA	199-143
1M17Z,10,5	MOTA	201- 29
1M18Z,10,5	♦MOTA	202- 58
1M19Z,10,5	MOTA	203-167
1M20Z,10,5	♦MOTA	205- 12
1M22Z,10,5	♦MOTA	206-170
1M24Z,10,5	♦MOTA	208-161
1M25Z,10,5	MOTA	210- 35
1M27Z,10,5	♦MOTA	211- 51
1M30Z,10,5	♦MOTA	213- 59
1M33Z,10,5	♦MOTA	215- 22
1M36Z,10,5	♦MOTA	216-135
1M39Z,10,5	♦MOTA	218- 32
1M43Z,10,5	♦MOTA	219-113
1M47Z,10,5	♦MOTA	221- 47
1M51Z,10,5	♦MOTA	223- 4
1M56Z,10,5	♦MOTA	224- 77
1M62Z,10,5	♦MOTA	226- 32
1M68Z,10,5	♦MOTA	227- 85
1M75Z,10,5	♦MOTA	229- 4
1M82Z,10,5	♦MOTA	230- 82
1M91Z,10,5	♦MOTA	232- 25
1M100Z,10,5	♦MOTA	233- 60
1M110Z,10,5	♦MOTA	235- 33
1M120Z,10,5	♦MOTA	236- 56
1M130Z,10,5	♦MOTA	237- 96
1M140Z,10,5	MOTA	238-103
1M150Z,10,5	♦MOTA	239- 69
1M160Z,10,5	♦MOTA	240-101
1M180Z,10,5	♦MOTA	242- 37
1M200Z,10,5	♦MOTA	243- 79
1N21B	♦ESMF	510- 57
KEM	MIC	
MISI	NECJ	
1N21C	♦△ALP	510- 58
♦ESMF	KEM	
MIC	MISI	
	NECJ	
1N21D	♦△ALP	510- 59
♦ESMF	KEM	
MIC	MISI	
	NECJ	
1N21E	△MIC	510- 60
♦ALP	♦ESMF	
KEM	MISI	
	NECJ	
1N21F	♦△ALP	510- 61
♦ESMF	KEM	
MIC	MISI	
	NECJ	
1N21G	♦△ALP	510- 62
MIC	NECJ	
1N21WD	NECJ	510- 63
1N21WE	♦ALP	510- 64
KEM	MIC	
	NECJ	
JAN1N21WE,WEM,WEMR		
ALP	MIC	510- 65
1N21WF	NECJ	510- 66
1N21WG	NECJ	510- 67
JAN1N21WG,WGM,WGMR		
ALP	MIC	510- 68
1N23A	NECJ	514- 92
1N23B	♦ESMF	512- 27
KEM	MIC	
MISI	NECJ	
1N23C	♦△ALP	512- 28
♦ESMF	KEM	
MIC	MISI	
	NECJ	
1N23D	♦△ALP	512- 29
♦ESMF	KEM	
MIC	MISI	
	NECJ	
1N23E	△MIC	512- 30
♦ALP	♦ESMF	
KEM	MISI	
	NECJ	
1N23F	△MIC	512- 31
♦ALP	♦ESMF	
KEM	MISI	
	NECJ	
1N23G	♦△ALP	512- 32
MIC	NECJ	
1N23WD	NECJ	512- 33

TYPE No.	MFRS	Pg&Line
1N23WE	♦ALP	512- 34
KEM	MIC	
	NECJ	
JAN1N23WE,WEM,WEMR		
ALP	MIC	512- 35
1N23WF	NECJ	512- 36
1N23WG	NECJ	512- 37
JAN1N23WG,WGM,WGMR		
ALP	MIC	512- 38
1N25	♦△ALP	510- 10
	KEM	
JAN1N25	ALP	510- 11
	KEM	
1N25A	♦△ALP	510- 12
	KEM	
1N25B	♦△ALP	510- 13
	KEM	
1N25WA	ALP	510- 14
JAN1N25WA	ALP	510- 15
1N26	♦△ALP	516- 34
	MIC	
1N26A	♦△ALP	516- 35
	MIC	
1N26B	♦ALP	510- 16
	MIC	
JAN1N26B,BM,BMR,BR		
	ALP	516- 38
1N26C	♦△ALP	516- 36
1N28J	NECJ	512- 6
1N31	♦△ALP	517- 70
	KEM	
JAN1N31	ALP	517- 71
	KEM	
1N31A	KEM	517- 72
1N32	♦△ALP	517- 34
♦ESMF	KEM	
MIC	MISI	
JAN1N32	MIC	517- 35
1N34	APX	250-103
BNT	GELC	
GIC	IDC	
ITT	KEM	
NECJ	PHIC	
SES	TEC	
TEK	♦TFKG	
	UPI	
1N34A	APX	250-104
BNT	EMLS	
ESMF	GELC	
GIC	HITJ	
IDC	ITT	
KEM	MISI	
NECJ	NJRC	
♦NPC	PHIC	
SDI	SES	
SOD	TEC	
TEK	UPI	
1N34AS	GELC	252- 29
	HSC	
1N35	GELC	249-102
HITJ	ITT	
KEM	SDI	
SES	TEK	
	UPI	
1N36	GIC	248- 84
ITT	KEM	
SES	TEC	
TEK	UPI	
1N38	APX	253- 78
GELC	GIC	
HSC	IDC	
ITT	KEM	
NECJ	SES	
TEC	TEK	
1N38A	APX	254- 58
ESMF	GELC	
GIC	HITJ	
HSC	IDC	
ITT	KEM	
MISI	NECJ	
NJRC	NPC	
SDI	SES	
TEC	TEK	
1N38B	GELC	254-106
GIC	HSC	
ITT	SDI	
SES	TEC	
	TEK	
1N39	GESY	257- 90
HSC	IDC	
ITT	KEM	
NECJ	NJRC	
	SES	
1N39A	HSC	257-109
IDC	KEM	
	SES	
1N39B	HSC	256-102
IDC	KEM	
	SES	
1N40	IDC	247- 62
KEM	TEC	
	UPI	
1N41	KEM	248- 53
	UPI	
1N42	GIC	254- 63
IDC	KEM	
	TEC	
1N43	ESMF	251- 83
ITT	KEM	
MISI	SES	
	UPI	
1N44	GIC	254- 56
ITT	KEM	
SES	TEC	

TYPE No.	MFRS	Pg&Line
1N45	GIC	252- 26
ITT	KEM	
SES	TEC	
	UPI	
1N46	GIC	250- 97
ITT	KEM	
NECJ	SES	
TEC	UPI	
1N47	GIC	255- 66
ITT	KEM	
	SES	
1N48	APX	252- 68
ESMF	GELC	
GIC	IDC	
ITT	KEM	
MISI	NPC	
SDI	SES	
TEC	♦TFKG	
	UPI	
1N49	GIC	252- 30
IDC	ITT	
SES	TEC	
	UPI	
1N50	GELC	252- 31
GIC	IDC	
ITT	SES	
TEC	UPI	
1N51	ESMF	249- 64
GELC	GIC	
ITT	KEM	
MISI	SES	
TEC	UPI	
1N52	ESMF	252- 69
GELC	GIC	
IDC	ITT	
KEM	MISI	
SES	TEC	
	UPI	
1N52A	GELC	249- 92
ITT	SES	
TEC	UPI	
1N53	♦△ALP	516- 44
GESY	MIC	
JAN1N53	ALP	516- 45
	MIC	
1N53A	△MIC	516- 46
	♦ALP	
1N53B	♦△ALP	516- 47
	MIC	
JAN1N53B,BM,BMR,BR		
	ALP	516- 48
1N53C	♦△ALP	516- 49
1N53D	♦△ALP	516- 50
1N54	APX	249- 93
GELC	GIC	
ITT	KEM	
NECJ	SES	
TEC	UPI	
1N54A	APX	249- 94
EMLS	ESMF	
GELC	HSC	
ITT	KEM	
MISI	NECJ	
NJRC	♦NPC	
SDI	SES	
TEC	UPI	
1N55	BNT	255- 67
GESY	GIC	
IDC	ITT	
KEM	SES	
	UPI	
1N55A	GIC	256- 59
ITT	KEM	
NECJ	NPC	
	SES	
	♦TEC	
1N55B	GIC	256- 82
IDC	ITT	
	SES	
1N56	BNT	249- 66
GELC	GIC	
ITT	KEM	
NECJ	SES	
TEC	UPI	
1N56A	BNT	249- 10
GELC	GIC	
HITJ	ITT	
KEM	NECJ	
NJRC	SES	
SOD	TEC	
	UPI	
1N57	GESY	252- 70
GIC	KEM	
SES	TEC	
	UPI	
1N57A	GIC	252- 71
IDC	KEM	
SES	TEC	
	UPI	
1N58	APX	254- 59
GELC	GIC	
HSC	IDC	
ITT	KEM	
SES	TEC	
1N58A	APX	253- 79
ESMF	GELC	
GIC	HSC	
IDC	ITT	
KEM	MISI	
NECJ	SDI	
SES	TEC	
1N59	GESY	258- 67
	IDC	
1N60	APX	248-101
cont.next col.		

TYPE No.	MFRS	Pg&Line
1N60		
(cont)	BNT	
♦DETM	ELBR	
ESMF	GELC	
GIC	HITJ	
IDC	ITT	
KEM	MISI	
NECJ	NJRC	
NPC	SES	
TEC	♦TFKG	
TOSJ	UPI	
1N60A	GELC	249- 4
ITT	KEM	
SES	TEC	
	UPI	
1N60C	GELC	249- 95
	UPI	
1N60S	HSC	247- 56
	♦NPC	
1N61	GELC	255- 53
GIC	ITT	
KEM	SES	
	TEC	
1N62	GELC	255- 54
GIC	IDC	
ITT	SES	
	TEC	
1N63	APX	253- 80
♦ESMF	GELC	
GIC	IDC	
ITT	KEM	
MCPE	MISI	
SDI	SES	
TEC	UPI	
1N63A	GIC	253- 81
IDC	ITT	
SES	TEC	
1N64	APX	247- 53
BNT	ESMF	
GELC	IDC	
KEM	MISI	
NPC	SDI	
TFKG	UPI	
1N64A	IDC	247- 5
KEM	UPI	
1N65	ESMF	252- 63
GELC	GIC	
IDC	ITT	
KEM	MISI	
SDI	SES	
TEC	UPI	
1N66	ELBR	250-105
EMLS	ESMF	
GELC	GESY	
GIC	ITT	
KEM	MISI	
SDI	SES	
TEC	UPI	
1N66A	GELC	250-106
GIC	ITT	
KEM	SES	
TEC	UPI	
1N67	BNT	253- 47
ELBR	GELC	
GIC	IDC	
ITT	KEM	
SES	TEC	
1N67A	APX	252- 72
BNT	EMLS	
GELC	GIC	
HSC	IDC	
ITT	KEM	
♦NPC	SDI	
SES	SOD	
♦TEC	UPI	
1N68	BNT	253- 70
ELBR	GELC	
GIC	IDC	
ITT	KEM	
SES	TEC	
1N68A	APX	253- 71
BNT	ESMF	
GELC	GIC	
IDC	ITT	
KEM	MISI	
SDI	SES	
	TEC	
1N69	ESMF	251- 84
GELC	GESY	
GIC	IDC	
ITT	KEM	
MISI	NPC	
SES	TEC	
	UPI	
1N69A	EMLS	252- 32
GELC	ITT	
KEM	NECJ	
SDI	SES	
SOD	TEC	
	UPI	
1N70	ESMF	254- 88
GELC	GIC	
ITT	KEM	
MISI	NECJ	
SES	TEC	
	UPI	
1N70A	ESMF	254-103
GELC	IDC	
ITT	KEM	
MISI	NPC	
SDI	SES	
	TEC	
1N71	GESY	581- 67
cont next page		

△-Registered with JEDEC by this manufacturer

♦-Copy of mfr's data sheet may be ordered from D.A.T.A.

1. TYPE No. CROSS INDEX

IN TYPE NUMBER SEQUENCE

TYPE No.	MFRS	Pg&Line
1N71		
(cont.)	GIC	
	ITT	
	KEM	
	SES	
	UPI	
1N72	GESY	575- 2
1N73	GESY	251- 92
	GIC	
	IDC	
	KEM	
	UPI	
1N74	GESY	252- 43
	GIC	
	KEM	
	UPI	
1N75	ESMF	253- 69
	GELC	
	GIC	
	IDC	
	ITT	
	KEM	
	MISI	
	SES	
	TEC	
1N76	♦△ALP	517- 73
	GESY	
	KEM	
1N76A	♦△ALP	517- 74
	KEM	
1N76C	KEM	517- 75
1N78	GESY	515- 44
	MIC	
1N78A	MIC	515- 45
1N78B	♦△ALP	515- 46
	MIC	
JAN1N78B	ALP	515- 47
	MIC	
1N78C	♦ALP	515- 48
	MIC	
JAN1N78C,CM,CMR,CR		
	ALP	
	MIC	515- 49
1N78D	♦△ALP	515- 50
	MIC	
1N78E	△MIC	515- 51
	♦ALP	
1N78F	♦ALP	515- 52
	MIC	
1N78G	MIC	515- 53
1N79	GESY	598- 11
	KEM	
1N81	ESMF	248-106
	GELC	
	GIC	
	ITT	
	KEM	
	MISI	
	NECJ	
	NPC	
	SES	
	SOD	
	TEC	
	UPI	
1N81A	EMLS	250- 77
	GELC	
	ITT	
	KEM	
	SDI	
	SES	
	SOD	
	TEC	
	UPI	
1N82	GIC	575- 3
	IDC	
	KEM	
	NJRC	
	♦NPC	
1N82A	BNT	575- 4
	GELC	
	GIC	
	IDC	
	KEM	
	MIC	
	NJRC	
	♦NPC	
	SAR	
JAN1N82A,AG	GIC	575- 5
	MIC	
1N82AG	GELC	575- 6
	GIC	
	IDC	
	KEM	
	MIC	
	NPC	
	SAR	
1N83	GESY	259- 38
	IDC	
	UPI	
1N84	GESY	247- 74
	GIC	
	IDC	
	ITT	
	SES	
	TEC	
	UPI	
1N86	GELC	251- 82
	GIC	
	ITT	
	KEM	
	SES	
	SOD	
	TEC	
	UPI	
1N87	ESMF	247- 38
	GIC	
	ITT	
	KEM	
	MISI	
	♦NPC	
	PHIC	
	SES	
	TEC	
	UPI	
1N87A	△APX	247- 39
	GELC	
	GIC	
	IDC	
	ITT	
	KEM	
	PHIC	
	SES	
	TEC	
	♦TFKG	
	UPI	
1N87S	♦NPC	247- 57
	UPI	
1N87T	♦NPC	247- 58
1N88	△APX	253- 35
	EMLS	
	GELC	
	GIC	
	ITT	
	KEM	
	SES	
	SOD	
	TEC	
1N89	APX	252- 65
	EMLS	
	GELC	
	GIC	
	ITT	
	KEM	
	SES	
	SOD	
	TEC	
	UPI	
1N90	APX	250-107
	EMLS	
	GELC	
	GIC	
	ITT	
	KEM	
	SDI	
	SES	
	SOD	
	TEC	
	UPI	
1N91	△GESY	298-107
	GELC	
	IDC	
	MOTA	
	SSI	
	UPI	

TYPE No.	MFRS	Pg&Line
1N92	△GESY	309- 63
	GELC	
	IDC	
	MOTA	
	SSI	
	UPI	
1N93	△GESY	320- 23
	GELC	
	IDC	
	MOTA	
	SSI	
	UPI	
JAN1N93A	GESY	320- 34
1N95	EMLS	251- 9
	GELC	
	GIC	
	ITT	
	KEM	
	SES	
	SOD	
	TEC	
	UPI	
1N96	EMLS	251- 13
	GELC	
	GIC	
	ITT	
	KEM	
	NECJ	
	SDI	
	SES	
	SOD	
	♦TEC	
	UPI	
1N96A	♦△TEC	251- 20
	EMLS	
	GELC	
	GIC	
	ITT	
	KEM	
	SES	
	SOD	
	UPI	
1N97	EMLS	252- 79
	GELC	
	GIC	
	ITT	
	KEM	
	SES	
	TEC	
	UPI	
1N97A	GELC	253- 48
	GIC	
	ITT	
	KEM	
	SES	
	TEC	
	UPI	
1N98	BNT	252- 81
	EMLS	
	GELC	
	GIC	
	ITT	
	KEM	
	SDI	
	SES	
	SOD	
	♦TEC	
	UPI	
1N98A	♦△TEC	252- 88
	EMLS	
	GELC	
	GIC	
	HSC	
	ITT	
	KEM	
	SDI	
	SES	
	SOD	
	UPI	
1N99	BNT	252- 80
	EMLS	
	GELC	
	GIC	
	ITT	
	KEM	
	SDI	
	SES	
	SOD	
	TEC	
	UPI	
1N99A	BNT	253- 49
	GELC	
	ITT	
	KEM	
	SES	
	TEC	
1N100	BNT	252- 82
	EMLS	
	GELC	
	GIC	
	IDC	
	ITT	
	KEM	
	SDI	
	SES	
	SOD	
	♦TEC	
	UPI	
1N100A	♦△TEC	252- 89
	BNT	
	EMLS	
	GELC	
	GIC	
	HSC	
	ITT	
	KEM	
	NJRC	
	SDI	
	SES	
	SOD	
	UPI	
1N102	GELC	255- 2
	GIC	
	IDC	
	ITT	
	SES	
1N103	GIC	247- 18
	IDC	
	ITT	
	SES	
	TEC	
	UPI	
1N104	GIC	247- 67
	IDC	
	ITT	
	SES	
	TEC	
	UPI	
1N105	GELC	592- 42
	KEM	
1N107	GELC	246- 55
	GIC	
	IDC	
	ITT	
	KEM	
	SES	
	TEC	
	UPI	
1N108	GELC	250- 16
	GIC	
	ITT	
	NJRC	
	SES	
	TEC	
	UPI	
1N109	KEM	598- 12
1N111	GELC	251- 85
	GIC	
	ITT	
	KEM	
	SES	
	TEC	
	UPI	
1N112	GELC	251- 86
	GIC	
	ITT	
	KEM	
	SES	
	TEC	
	UPI	
1N113	GELC	251- 79
	GIC	
	ITT	
	KEM	
	SES	
	TEC	
	UPI	
1N114	GELC	251- 80
	GIC	
	ITT	
	KEM	
	SES	
	TEC	
	UPI	
1N115	GELC	251- 81
	GIC	
	ITT	
	KEM	
	SDI	
	SES	
	SOD	
	TEC	
	UPI	

TYPE No.	MFRS	Pg&Line
1N116	APX	250-108
	EMLS	
	GELC	
	GIC	
	IDC	
	ITT	
	KEM	
	SDI	
	SES	
	SOD	
	TEC	
	UPI	
1N116A	ITT	251- 91
	KEM	
	SES	
	UPI	
1N117	APX	251- 10
	EMLS	
	GELC	
	GIC	
	ITT	
	KEM	
	SDI	
	SES	
	SOD	
	UPI	
1N117A	GELC	251- 94
	GIC	
	ITT	
	KEM	
	SES	
	UPI	
1N118	EMLS	251- 14
	GELC	
	GIC	
	ITT	
	KEM	
	SDI	
	SES	
	SOD	♦TEC
	UPI	
1N118A	♦△TEC	251- 21
	EMLS	
	GELC	
	GIC	
	ITT	
	KEM	
	SDI	
	SES	
	SOD	
	UPI	
1N119	EMLS	273- 97
	GELC	
	IDC	
	ITT	
	SES	
	TEC	
1N120	EMLS	273- 98
	GELC	
	GIC	
	IDC	
	ITT	
	SES	
	SOD	
	TEC	
1N126	APX	250-109
	BNT	
	EMLS	
	GELC	
	GIC	
	ITT	
	KEM	
	SES	
	SOD	
	TEC	
	UPI	
1N126A	APX	252- 33
	BNT	
	EMLS	
	♦ESMF	
	GELC	
	ITT	
	KEM	
	MISI	
	NPC	
	SDI	
	SES	
	SOD	
	TEC	
	UPI	
1N127	BNT	253- 72
	GELC	
	GIC	
	IDC	
	ITT	
	KEM	
	SES	
	SOD	
	TEC	
1N127A	BNT	254-104
	ESMF	
	GELC	
	GIC	
	IDC	
	ITT	
	KEM	
	MISI	
	NPC	
	SDI	
	SES	
	TEC	
1N128	APX	248-107
	BNT	
	EMLS	
	♦ESMF	
	GELC	
	GIC	
	ITT	
	KEM	
	MISI	
	SDI	
	SES	
	UPI	
1N128A	BNT	248-108
	GELC	
	GIC	
	ITT	
	KEM	
	SES	
	UPI	
1N132	KEM	575- 7
1N133	EMLS	246- 13
	GIC	
	IDC	
	ITT	
	KEM	
	SES	
	UPI	
1N135	GIC	252- 34
	IDC	
	ITT	
	SES	
	TEC	
	UPI	
1N137A	♦△CRL	248- 83
	CODI	
	ITT	
	SES	
	SSI	
	TSC	
	UPI	
	USS	
1N137B	ITT	248- 85
	SES	
	SSI	
	UPI	
1N138A	♦△CRL	246- 94
	CODI	
	ITT	
	SES	
	SSI	
	TSC	
	UPI	
	USS	
1N138B	ITT	246- 97
	SES	
	UPI	
1N139	△TEC	249- 67
	EMLS	
	GELC	
	GIC	
	ITT	
	SES	
	SOD	
	UPI	
1N140	△TEC	252- 90
	EMLS	
	GELC	
	GIC	
	ITT	
	SES	
	SOD	
	UPI	
1N141	EMLS	252- 83
cont next col		

TYPE No.	MFRS	Pg&Line
1N141		
(cont.)	GELC	
	GIC	
	ITT	
	SES	
	SOD	
	UPI	
1N142	EMLS	254- 60
	GELC	
	GIC	
	ITT	
	SES	
1N143	EMLS	254- 71
	GELC	
	GIC	
	ITT	
	SES	
1N144	△TEC	248- 65
	GELC	
	GIC	
	ITT	
	SES	
	UPI	
1N145	△TEC	249- 13
	GELC	
	GIC	
	ITT	
	SES	
	UPI	
1N149	△MIC	512- 39
	ALP	♦ESMF
	KEM	
	MISI	
1N150	△MIC	512- 8
	KEM	
1N151	GELC	301- 62
1N152	GELC	311-106
1N153	GELC	321- 46
1N158	GELC	328- 8
1N160	△MIC	512- 9
	KEM	
1N175	IDC	254-109
	ITT	
	SES	
	TEC	
1N191	APX	276- 92
	BNT	
	EMLS	
	ESMF	
	GELC	
	GIC	
	IDC	
	ITT	
	MISI	
	NPC	
	PHIC	
	SDI	
	SES	
	SOD	♦TEC
1N192	APX	274- 54
	BNT	
	EMLS	
	ESMF	
	GELC	
	GIC	
	IDC	
	ITT	
	MISI	
	NPC	
	PHIC	
	SDI	
	SES	
	SOD	♦TEC
1N194	CODI	272- 7
	HSC	
	IDC	
	ITT	
	SES	
1N194A	CODI	269- 67
	HSC	
	IDC	
	ITT	
	SDI	
	SES	
1N195	CODI	272- 8
	HSC	
	IDC	
	ITT	
	SDI	
	SES	
1N196	CODI	272- 9
	HSC	
	IDC	
	ITT	
	SDI	
	SES	
1N198	APX	252- 73
	BNT	
	ESMF	
	GELC	
	GIC	
	IDC	
	ITT	
	MISI	
	NPC	
	SDI	
	SES	
	TEC	
	TEK	
	TFKG	
	UPI	
1N198A	BNT	252- 74
	EMLS	
	GELC	
	GIC	
	IDC	
	ITT	
	SDI	
	SES	
	TEC	
	TEK	
	UPI	
1N198B	BNT	279- 39
	EMLS	
	GELC	
	IDC	
	ITT	
	SDI	
	SES	
	SOD	
	TEK	
1N198M	IDC	252- 75
	ITT	
	UPI	
1N200	♦△CRL	246- 22
	CODI	
	SCA	
	SDI	
	SSI	
	TSC	
	UPI	
	USS	
	WSI	
1N201	♦△CRL	246- 32
	CODI	
	SCA	
	SDI	
	SSI	
	TSC	
	UPI	
	USS	
	WSI	
1N202	♦△CRL	246- 44
	CODI	
	SCA	
	SDI	
	SSI	
	TSC	
	UPI	
	USS	
	WSI	
1N203	♦△CRL	246- 62
	CODI	
	SCA	
	SDI	
	SSI	
	TSC	
	UPI	
	USS	
	WSI	
1N204	♦△CRL	246- 69
	CODI	
	SCA	
	SDI	
	SSI	
	TSC	
	UPI	
	USS	
	WSI	
1N205	♦△CRL	246- 95
	CODI	
	SCA	
	SDI	
cont.next col		

TYPE No.	MFRS	Pg&Line
1N205		
(cont.)	SSI	
	TSC	
	UPI	
	USS	
	WSI	
1N206	♦△CRL	247- 35
	CODI	
	SCA	
	SDI	
	SSI	
	TSC	
	UPI	
	USS	
	WSI	
1N207	♦△CRL	247- 83
	CODI	
	SCA	
	SDI	
	SSI	
	TSC	
	UPI	
	USS	
	WSI	
1N208	♦△CRL	248- 56
	CODI	
	SCA	
	SDI	
	SSI	
	TSC	
	USS	
	WSI	
1N209	♦△CRL	248- 94
	CODI	
	ITT	
	SCA	
	SDI	
	SSI	
	TSC	
	UPI	
	USS	
	WSI	
1N210	♦△CRL	249- 72
	CODI	
	ITT	
	SCA	
	SDI	
	SSI	
	TSC	
	UPI	
	USS	
	WSI	
1N211	♦△CRL	250- 83
	CODI	
	ITT	
	SCA	
	SDI	
	SSI	
	TSC	
	UPI	
	USS	
	WSI	
1N212	♦△CRL	251- 63
	CODI	
	ITT	
	SCA	
	SDI	
	SSI	
	TSC	
	UPI	
	USS	
	WSI	
1N213	♦△CRL	253- 11
	CODI	
	ITT	
	SCA	
	SDI	
	SSI	
	TSC	
	UPI	
	USS	
	WSI	
1N214	♦△CRL	253- 66
	CODI	
	ITT	
	SCA	
	SDI	
	SSI	
	TSC	
	WSI	
1N215	♦△CRL	254- 86
	CODI	
	SCA	
	SDI	
	SSI	
	TSC	
	WSI	
1N216	♦△CRL	255- 58
	CODI	
	SCA	
	SDI	
	SSI	
	TSC	
	WSI	
1N217	♦△CRL	256- 83
	CODI	
	SCA	
	SDI	
	SSI	
	TSC	
	WSI	
1N218	♦△CRL	257- 91
	CODI	
	SCA	
	SDI	
	SSI	
	TSC	
	WSI	
1N219	♦△CRL	258- 34
	CODI	
	SCA	
	SDI	
	SSI	
	TSC	
	WSI	
1N220	♦△CRL	259- 6
	CODI	
	SCA	
	SDI	
	SSI	
	TSC	
	WSI	
1N221	♦△CRL	259- 43
	CODI	
	SCA	
	SDI	
	SSI	
	TSC	
	WSI	
1N222	♦△CRL	259- 89
	CODI	
	SCA	
	SDI	
	SSI	
	TSC	
	WSI	
1N225	CODI	184- 59
	♦CRL	♦DIC
	GSE	MSC
	SDI	SEN
	SSI	TSC
	USS	WSI
1N225A	CODI	184- 60
	♦CRL	♦DIC
	GSE	MSC
	SDI	SEN
	SSI	TSC
	USS	WSI
1N226	CODI	189-107
	♦CRL	♦DIC
	GSE	MSC
	SDI	SEN
	SSI	TSC
	USS	WSI
1N226A	CODI	189-108
	♦CRL	♦DIC
	GSE	MSC
	SDI	SEN
	SSI	TSC
	USS	WSI
1N227	CODI	194- 5
	♦CRL	♦DIC
	GSE	MSC
cont next page		

△-Registered with JEDEC by this manufacturer

♦-Copy of mfr's data sheet may be ordered from D.A.T.A.

1. TYPE No. CROSS INDEX

IN TYPE NUMBER SEQUENCE

TYPE No.	MFRS	Pg&Line
1N227		
(cont)	SDI	
SEN	SES	
SSI	TSC	
USS	WSI	
1N227A	CODI	194 - 6
♦CRL	♦DIC	
GSE	MSC	
SDI	SEN	
SES	SSI	
TSC	USS	
	WSI	
1N228	CODI	198-199
♦CRL	♦DIC	
GSE	MSC	
SDI	SEN	
SSI	TSC	
USS	WSI	
1N228A	CODI	198-200
♦CRL	♦DIC	
GSE	MSC	
SDI	SEN	
SSI	TSC	
UPI	USS	
	WSI	
1N229	CODI	203 - 99
♦CRL	♦DIC	
GSE	MSC	
SDI	SEN	
SSI	TSC	
	USS	
1N229A	CODI	203-100
♦CRL	♦DIC	
GSE	MSC	
SDI	SEN	
SSI	TSC	
	USS	
1N230	CODI	208 - 27
♦CRL	♦DIC	
GSE	MSC	
SDI	SEN	
SSI	TSC	
	USS	
1N230A	CODI	208 - 28
♦DIC	GSE	
MSC	SDI	
SEN	SSI	
TSC	USS	
1N231	CODI	212-130
♦CRL	♦DIC	
GSE	MSC	
SDI	SEN	
SSI	TSC	
	USS	
1N231A	CODI	212-131
♦DIC	GSE	
MSC	SDI	
SEN	SSI	
TSC	USS	
1N232	CODI	216 - 45
♦CRL	♦DIC	
GSE	MSC	
SDI	SEN	
SSI	TSC	
	USS	
1N232A	CODI	216 - 46
♦DIC	GSE	
MSC	SDI	
SEN	SSI	
TSC	USS	
1N233	CODI	219 - 24
♦CRL	♦DIC	
GSE	MSC	
SDI	SEN	
SSI	TSC	
	USS	
1N233A	CODI	219 - 25
♦DIC	GSE	
MSC	SDI	
SEN	SSI	
TSC	USS	
1N234	♦CRL	222 - 31
♦DIC	GSE	
MSC	SCA	
SDI	SEN	
	USS	
1N234A	♦DIC	222 - 32
GSE	MSC	
SCA	SDI	
SEN	USS	
1N235	♦CRL	225 - 83
♦DIC	GSE	
IDC	MSC	
SCA	SDI	
SEN	USS	
1N235A	♦DIC	225 - 84
GSE	IDC	
MSC	SCA	
SDI	SEN	
	USS	
1N236	♦CRL	228-102
SCA	SDI	
1N237	♦CRL	231-104
	SDI	
1N238	♦CRL	234 - 60
	SDI	
1N239	♦CRL	237 - 40
SCA	SDI	
1N248	△TEC	296 - 45
BRA	EDL	
ETC	GESY	
IDC	INRB	
INRC	INRI	
cont next col		

TYPE No.	MFRS	Pg&Line
1N248		
(cont)	INRJ	
ITT	SAR	
SES	SOD	
SSI	SYN	
TRW	UPI	
	WESY	
1N248A	△TEC	297 - 45
BRA	EDL	
ETC	GESY	
IDC	INRB	
INRC	INRI	
INRJ	ITT	
SAR	SES	
SOD	SSI	
SYN	TRW	
	WESY	
1N248B	△TEC	297 - 46
BRA	EDL	
♦ESMF	ETC	
GESY	IDC	
INRB	INRC	
INRI	INRJ	
ITT	MISI	
♦MOTA	SAR	
SOD	SOIF	
SSI	SYN	
TRW	WESY	
1N248C	♦△RCA	298 - 32
BRA	EDL	
ETC	GESY	
IDC	INRB	
INRC	INRI	
INRJ	ITT	
♦MOTA	SAR	
SCN	SOD	
SSI	SYN	
TRW	UPI	
1N249	△TEC	304 - 19
BRA	EDL	
ETC	GESY	
IDC	INRB	
INRC	INRI	
INRJ	ITT	
SAR	SES	
SOD	SSI	
SYN	TRW	
	WESY	
1N249B	△TEC	305 - 48
BRA	EDL	
♦ESMF	ETC	
GESY	IDC	
INRB	INRC	
INRI	INRJ	
ITT	MISI	
♦MOTA	SAR	
SOD	SOIF	
SSI	SYN	
TRW	WESY	
JAN1N249B,RB	GESY	307 - 34
	WESY	
1N249C	♦△RCA	307 - 22
BRA	EDL	
ETC	GESY	
IDC	INRB	
INRC	INRI	
INRJ	ITT	
♦MOTA	SAR	
SCN	SOD	
SSI	SYN	
TRW	UPI	
1N250	△TEC	315 - 44
BRA	EDL	
ETC	GESY	
IDC	INRB	
INRC	INRI	
INRJ	ITT	
SAR	SES	
SOD	SSI	
SYN	TRW	
UPI	WESY	
1N250A	△TEC	316 - 89
BRA	EDL	
ETC	GESY	
IDC	INRB	
INRC	INRI	
INRJ	ITT	
SAR	SES	
SOD	SSI	
SYN	TRW	
	WESY	
1N250B	△TEC	316 - 90
BRA	EDL	
♦ESMF	ETC	
GESY	IDC	
INRB	INRC	
INRI	INRJ	
ITT	MISI	
♦MOTA	NPC	
SAR	SOD	
SOIF	SSI	
SYN	TRW	
	WESY	

TYPE No.	MFRS	Pg&Line
JAN1N250B,RB	GESY	319 - 51
	WESY	
1N250C	♦△RCA	318 - 90
BRA	EDL	
ETC	GESY	
IDC	INRB	
INRC	INRI	
INRJ	ITT	
♦MOTA	SAR	
SCN	SOD	
SSI	SYN	
	TRW	
1N251	△TEC	269 - 59
AMD	CODI	
EMLS	FSC	
GESY	IDC	
ITT	NJRC	
RAYN	SDI	
SES	SGSI	
SOD	♦TII	
TIID	♦TIIF	
TSC	WSI	
JAN1N251	FSC	269 - 57
RAYN	TEC	
	TII	
1N251A	CODI	280 - 78
FSC	IDC	
ITT	SGSI	
TSC	WSI	
1N252	△TEC	265-103
AMD	CODI	
EMLS	FSC	
HSC	IDC	
ITT	RAYN	
SDI	SES	
SGSI	SOD	
TIID	♦TIIF	
TSC	WSI	
1N252A	CODI	280 - 79
HSC	IDC	
	ITT	
1N253	△TEC	298 - 92
BRA	EDI	
EDL	EMLS	
ESP	ETC	
GELC	GESY	
GIC	GICC	
IDC	INRB	
INRC	INRI	
INRJ	ITT	
MOTA	SAR	
SCN	SES	
SSI	TII	
TIIB	TIID	
	TIIF	
JAN1N253	GIC	301 - 44
1N254	△TEC	309 - 51
BRA	EDI	
EDL	EMLS	
ESP	ETC	
GELC	GESY	
GIC	GICC	
INRB	INRC	
INRI	INRJ	
ITT	MOTA	
SAR	SCN	
SES	SSI	
TII	TIIB	
TIID	TIIF	
JAN1N254	GIC	310 - 6
1N255	△TEC	328 - 7
BRA	EDI	
EDL	EMLS	
ESP	ETC	
GELC	GESY	
GIC	GICC	
INRB	INRC	
INRI	INRJ	
ITT	MOTA	
SAR	SCN	
SES	SSI	
TII	TIIB	
TIID	TIIF	
JAN1N255	GIC	328 - 74
1N256	△TEC	345 - 70
BRA	EDI	
EDL	EMLS	
ESP	ETC	
GELC	GESY	
GIC	GICC	
INRB	INRC	
INRI	INRJ	
ITT	MOTA	
SAR	SCN	
SES	SSI	
TII	TIIB	
TIID	TIIF	
JAN1N256	GIC	345-107
1N258	IDC	517 - 8
1N263	△PHIL	512 - 40
	NECJ	
JAN1N263	PHIL	512 - 41
1N265	GELC	252 - 76
IDC	ITT	
KEM	SES	
1N266	GELC	249 - 96
ITT	KEM	
SES	UPI	
1N267	GELC	247-105
IDC	ITT	
KEM	SES	
	UPI	
1N268	GELC	247 - 99
cont next col		

TYPE No.	MFRS	Pg&Line
1N268		
(cont)	ITT	
KEM	SES	
	UPI	
1N270	♦△TEC	254 - 6
APX	BNT	
EMLS	ESMF	
GELC	GIC	
HSC	IDC	
ITT	MISI	
♦NPC	SDI	
SES	SOD	
	UPI	
JAN1N270	GIC	254 - 7
ITT	TEC	
1N273	♦△TEC	248 - 54
EMLS	GELC	
GIC	IDC	
ITT	SES	
SOD	UPI	
1N276	♦△TEC	279 - 40
APX	BNT	
EMLS	ESMF	
GELC	GIC	
HSC	IDC	
ITT	MISI	
NJRC	♦NPC	
SDI	SES	
	SOD	
JAN1N276	GIC	279 - 41
ITT	TEC	
1N277	△TEC	255 - 7
APX	BNT	
ESMF	GELC	
GIC	IDC	
ITT	MISI	
NJRC	NPC	
SDI	SES	
SOD	UPI	
JAN1N277	GIC	254-108
ITT	TEC	
1N277M	IDC	253-108
	ITT	
1N278	♦△TEC	250 - 86
BNT	EMLS	
GELC	GIC	
IDC	ITT	
SES	SOD	
	UPI	
1N279	♦△TEC	248 - 55
BNT	EMLS	
GELC	GIC	
IDC	ITT	
SDI	SES	
SOD	UPI	
1N281	△TEC	252 - 48
BNT	EMLS	
GELC	GIC	
IDC	ITT	
NJRC	♦NPC	
SDI	SES	
SOD	UPI	
1N282	△TEC	246 - 78
IDC	UPI	
1N283	♦△TEC	247 - 43
EMLS	GELC	
GIC	IDC	
ITT	NJRC	
SDI	SES	
SOD	UPI	
1N286A	♦△ALP	515 - 54
1N287	EMLS	249 - 11
GELC	GIC	
ITT	SES	
SOD	TEC	
	UPI	
1N288	BNT	251-105
EMLS	GELC	
GIC	IDC	
ITT	SES	
SOD	TEC	
	UPI	
1N289	BNT	252 - 84
EMLS	GELC	
GIC	IDC	
ITT	SES	
SOD	TEC	
	UPI	
1N290	GELC	253 - 83
GIC	IDC	
ITT	SES	
	TEC	
1N291	EMLS	253 - 98
GELC	GIC	
IDC	ITT	
SES	TEC	
	UPI	
1N292	EMLS	252 - 3
GELC	GIC	
IDC	ITT	
SES	SOD	
	UPI	
1N294	BNT	250-110
ELBR	ESMF	
GELC	GIC	
IDC	ITT	
KEM	MISI	
♦NPC	SDI	
SES	TEC	
	UPI	
1N294A	GELC	251 - 1
GIC	IDC	
ITT	SES	
TEC	UPI	

TYPE No.	MFRS	Pg&Line
1N295	APX	248 - 99
BNT	ELBR	
ESMF	GELC	
GIC	IDC	
KEM	MISI	
♦NPC	SDI	
TEC	UPI	
1N295A	GELC	248-100
IDC	UPI	
1N295S	♦NPC	247-106
1N295X	♦NPC	247-104
1N297	ELBR	252 - 66
GELC	GIC	
ITT	KEM	
SDI	SES	
TEC	UPI	
1N297A	GELC	252 - 67
ITT	SES	
TEC	UPI	
1N298	BNT	251-103
GELC	GIC	
IDC	ITT	
KEM	SDI	
SES	SOD	
TEC	UPI	
1N298A	GELC	251-104
GIC	IDC	
ITT	SES	
TEC	UPI	
1N299	KEM	575 - 8
1N300	△RAYN	246 - 68
SSI	TSC	
	UPI	
1N300A	△RAYN	246 - 77
IDC	SSI	
TSC	UPI	
1N300B	IDC	246 - 82
SSI	TSC	
	UPI	
1N301	△RAYN	251 - 87
BNT	SSI	
UPI	WSI	
1N301A	△RAYN	251 - 93
BNT	SSI	
UPI	WSI	
1N301B	SSI	251-107
UPI	WSI	
1N302	△RAYN	257 - 95
BNT	SSI	
	WSI	
1N302A	△RAYN	257 - 96
BNT	SSI	
	WSI	
1N302B	ERI	257 - 97
SSI	WSI	
1N303	△RAYN	254-105
BNT	ETC	
IDC	SSI	
	WSI	
1N303A	△RAYN	255 - 1
BNT	ETC	
IDC	SSI	
	WSI	
1N303B	ETC	255 - 4
IDC	SSI	
	WSI	
1N304	GIC	250 - 76
ITT	SES	
TEC	UPI	
1N305	ITT	251 - 23
SES	TEC	
	UPI	
1N306	IDC	246 - 84
ITT	SES	
TEC	UPI	
1N307	IDC	255 - 8
ITT	SES	
	TEC	
1N308	GELC	246 - 31
GIC	IDC	
ITT	SES	
TEC	UPI	
1N309	GELC	248 - 23
GIC	ITT	
SES	TEC	
	UPI	
1N310	GELC	253 - 92
GIC	ITT	
SES	TEC	
1N312	GELC	250 - 12
GIC	ITT	
SES	TEC	
	UPI	
1N313	GELC	253 - 95
GIC	ITT	
SES	TEC	
1N314	IDC	252 - 42
ITT	SES	
TEC	UPI	
1N315	△GESY	320 - 24
IDC	SSI	
	UPI	
1N316	BRA	293 - 2
ETC	GIC	
IDC	INRB	
INRC	INRI	
INRJ	ITT	
SCN	SES	
SSI	TEC	
	UPI	
1N316A	BRA	293 - 3
ETC	GIC	
IDC	ITT	
cont next page		

△-Registered with JEDEC by this manufacturer

♦-Copy of mfr's data sheet may be ordered from D.A.T.A.

1. TYPE No. CROSS INDEX

IN TYPE NUMBER SEQUENCE

TYPE No.	MFRS	Pg&Line
1N316A (cont)	SCN	
	SES	
	SSI	
	TEC	
	UPI	
1N317	BRA	299 - 27
	ETC	
	GIC	
	IDC	
	INRB	
	INRC	
	INRI	
	INRJ	
	ITT	
	SCN	
	SES	
	SSI	
	TEC	
	UPI	
1N317A	BRA	299 - 28
	ETC	
	GIC	
	IDC	
	ITT	
	SCN	
	SES	
	SSI	
	TEC	
	UPI	
1N318	BRA	309 - 98
	ETC	
	GIC	
	IDC	
	INRB	
	INRC	
	INRI	
	INRJ	
	ITT	
	SCN	
	SES	
	SSI	
	TEC	
	UPI	
1N318A	BRA	309 - 99
	ETC	
	GIC	
	IDC	
	ITT	
	SCN	
	SES	
	SSI	
	TEC	
	UPI	
1N319	BRA	327 - 31
	ETC	
	GIC	
	INRB	
	INRC	
	INRI	
	INRJ	
	ITT	
	SCN	
	SES	
	SSI	
	TEC	
	UPI	
1N319A	BRA	327 - 30
	ETC	
	GIC	
	ITT	
	SCN	
	SES	
	SSI	
	TEC	
	UPI	
1N320	BRA	339 - 17
	ETC	
	GIC	
	IDC	
	INRB	
	INRC	
	INRI	
	INRJ	
	ITT	
	SCN	
	SES	
	SSI	
	TEC	
1N320A	BRA	339 - 18
	ETC	
	GIC	
	ITT	
	SCN	
	SES	
	SSI	
	TEC	
1N321	BRA	366 - 92
	ETC	
	SCN	
	SES	
	SSI	
	TEC	
1N321A	BRA	366 - 93
	ETC	
	ITT	
	SCN	
	SES	
	SSI	
	TEC	
1N322	BRA	369 - 79
	ETC	
	IDC	
	SCN	
	SES	
	SSI	
	TEC	
1N322A	BRA	369 - 80
	ETC	
	ITT	
	SCN	
	SES	
	SSI	
	TEC	
1N323	BRA	293 - 14
	ETC	
	GIC	
	IDC	
	ITT	
	SCN	
	SES	
	TEC	
	UPI	
1N323A	BRA	293 - 15
	ETC	
	GIC	
	IDC	
	ITT	
	SCN	
	SES	
	TEC	
	UPI	
1N324	BRA	299 - 42
	ETC	
	GIC	
	IDC	
	ITT	
	SCN	
	SES	
	TEC	
	UPI	
1N324A	BRA	299 - 43
	ETC	
	GIC	
	IDC	
	ITT	
	SCN	
	SES	
	TEC	
	UPI	
1N325	BRA	310 - 2
	ETC	
	GIC	
	ITT	
	SCN	
	SES	
	TEC	
	UPI	
1N325A	BRA	310 - 3
	ETC	
	GIC	
	ITT	
	SCN	
	SES	
	TEC	
	UPI	
1N326	BRA	327 - 34
	ETC	
	GIC	
	ITT	
	SCN	
	SES	
	SSI	
	TEC	
	UPI	
1N326A	BRA	327 - 35
	ETC	
	GIC	
	ITT	
	SCN	
	SES	
	SSI	
	TEC	
	UPI	
1N327	BRA	339 - 32

cont next col.

TYPE No.	MFRS	Pg&Line
1N327 (cont.)	ETC	
	GIC	
	IDC	
	ITT	
	SCN	
	SES	
	SSI	
	TEC	
1N327A	BRA	339 - 33
	ETC	
	GIC	
	ITT	
	SCN	
	SES	
	SSI	
	TEC	
1N328	BRA	366 - 95
	ETC	
	SCN	
	SES	
	SSI	
	TEC	
1N328A	BRA	366 - 96
	ETC	
	ITT	
	SCN	
	SES	
	SSI	
	TEC	
1N329	BRA	369 - 90
	ETC	
	SCN	
	SES	
	SSI	
	TEC	
1N329A	BRA	369 - 91
	ETC	
	ITT	
	SCN	
	SES	
	SSI	
	TEC	
1N330	IDC	248 - 52
	TSC	
	UPI	
1N331	IDC	246 - 89
	TSC	
	UPI	
	WSI	
1N332	△TEC	328 - 75
	BRA	
	EDI	
	EDL	
	ETC	
	GELC	
	GIC	
	GICC	
	IDC	
	INRB	
	INRC	
	INRI	
	INRJ	
	ITT	
	MOTA	
	SAR	
	SCN	
	SES	
	SOD	
	SSI	
	TII	
	TIID	
	TIIF	
	UPI	
1N333	△TEC	328 - 44
	BRA	
	EDI	
	EDL	
	ETC	
	GELC	
	GIC	
	GICC	
	IDC	
	INRB	
	INRC	
	INRI	
	INRJ	
	ITT	
	MOTA	
	SAR	
	SCN	
	SES	
	SOD	
	SSI	
	TII	
	TIID	
	TIIF	
	UPI	
1N334	△TEC	320 - 70
	BRA	
	EDI	
	ETC	
	GELC	
	GIC	
	GICC	
	IDC	
	INRB	
	INRC	
	INRI	
	INRJ	
	ITT	
	MOTA	
	SAR	
	SCN	
	SES	
	SOD	
	SSI	
	TII	
	TIID	
	TIIF	
	UPI	
1N335	△TEC	320 - 50
	BRA	
	EDI	
	EDL	
	ETC	
	GELC	
	GIC	
	GICC	
	IDC	
	INRB	
	INRC	
	INRI	
	INRJ	
	ITT	
	MOTA	
	SAR	
	SCN	
	SES	
	SOD	
	SSI	
	TII	
	TIID	
	TIIF	
	UPI	
1N336	△TEC	310 - 7
	BRA	
	EDI	
	EDL	
	ETC	
	GELC	
	GIC	
	GICC	
	INRB	
	INRC	
	INRI	
	INRJ	
	ITT	
	MOTA	
	SAR	
	SCN	
	SES	
	SOD	
	SSI	
	TII	
	TIID	
	TIIF	
	UPI	
1N337	△TEC	309 - 89
	BRA	
	EDI	
	EDL	
	ETC	
	GELC	
	GIC	
	GICC	
	IDC	
	INRB	
	INRC	
	INRI	
	INRJ	
	ITT	
	MOTA	
	SAR	
	SCN	
	SES	
	SOD	
	SSI	
	TII	
	TIID	
	TIIF	
	UPI	
1N338	△TEC	301 - 45
	BRA	
	EDI	
	EDL	
	ETC	
	GIC	
	GICC	
	INRB	
	INRC	

cont next col

TYPE No.	MFRS	Pg&Line
1N338 (cont.)	INRI	
	INRJ	
	ITT	
	MOTA	
	SAR	
	SCN	
	SES	
	SOD	
	SSI	
	TII	
	TIID	
	TIIF	
	UPI	
1N339	△TEC	299 - 46
	BRA	
	EDI	
	EDL	
	ETC	
	GELC	
	GIC	
	GICC	
	IDC	
	INRB	
	INRC	
	INRI	
	INRJ	
	ITT	
	MOTA	
	SAR	
	SCN	
	SES	
	SOD	
	SSI	
	TII	
	TIID	
	TIIF	
1N340	△TEC	299 - 19
	BRA	
	EDI	
	EDL	
	ETC	
	GELC	
	GIC	
	GICC	
	IDC	
	INRB	
	INRC	
	INRI	
	INRJ	
	ITT	
	MOTA	
	SAR	
	SCN	
	SES	
	SOD	
	SSI	
	TII	
	TIID	
	TIIF	
1N341	△TEC	328 - 76
	BRA	
	EDI	
	EDL	
	ETC	
	GELC	
	GIC	
	GICC	
	INRB	
	INRC	
	INRI	
	INRJ	
	ITT	
	MOTA	
	SAR	
	SCN	
	SES	
	SOD	
	SSI	
	TII	
	TIID	
	TIIF	
	UPI	
1N342	△TEC	328 - 45
	BRA	
	EDI	
	EDL	
	ETC	
	GELC	
	GIC	
	GICC	
	IDC	
	INRB	
	INRC	
	INRI	
	INRJ	
	ITT	
	MOTA	
	SAR	
	SCN	
	SES	
	SOD	
	SSI	
	TII	
	TIID	
	TIIF	
	UPI	
1N343	△TEC	320 - 71
	BRA	
	EDI	
	EDL	
	ETC	
	GELC	
	GIC	
	GICC	
	INRB	
	INRC	
	INRI	
	INRJ	
	ITT	
	MOTA	
	SAR	
	SCN	
	SES	
	SOD	
	SSI	
	TII	
	TIID	
	TIIF	
	UPI	
1N344	△TEC	320 - 51
	BRA	
	EDI	
	EDL	
	ETC	
	GELC	
	GIC	
	GICC	
	IDC	
	INRB	
	INRC	
	INRI	
	INRJ	
	ITT	
	MOTA	
	SAR	
	SCN	
	SES	
	SOD	
	SSI	
	TII	
	TIID	
	TIIF	
	UPI	
1N345	△TEC	310 - 8
	BRA	
	EDI	
	EDL	
	ETC	
	GELC	
	GIC	
	GICC	
	INRB	
	INRC	
	INRI	
	INRJ	
	ITT	
	MOTA	
	SAR	
	SCN	
	SES	
	SOD	
	SSI	
	TII	
	TIID	
	TIIF	
	UPI	
1N346	△TEC	309 - 90
	BRA	
	EDI	
	EDL	
	ETC	
	GELC	
	GIC	
	GICC	
	IDC	
	INRB	
	INRC	
	INRI	
	INRJ	
	ITT	
	MOTA	
	SAR	
	SCN	
	SES	
	SOD	
	SSI	
	TII	
	TIID	
	TIIF	
	UPI	
1N347	△TEC	301 - 46
	BRA	
	EDI	
	EDL	
	ETC	
	GELC	
	GIC	
	GICC	
	INRB	

cont next col

TYPE No.	MFRS	Pg&Line
1N347 (cont)	INRC	
	INRI	
	INRJ	
	ITT	
	MOTA	
	SAR	
	SCN	
	SES	
	SOD	
	SSI	
	TII	
	TIID	
	TIIF	
	UPI	
1N348	△TEC	299 - 47
	BRA	
	EDI	
	EDL	
	ETC	
	GELC	
	GIC	
	GICC	
	IDC	
	INRB	
	INRC	
	INRI	
	INRJ	
	ITT	
	MOTA	
	SAR	
	SCN	
	SES	
	SOD	
	SSI	
	TII	
	TIID	
	TIIF	
1N349	△TEC	299 - 20
	BRA	
	EDI	
	EDL	
	ETC	
	GELC	
	GIC	
	GICC	
	IDC	
	INRB	
	INRC	
	INRI	
	INRJ	
	ITT	
	MOTA	
	SAR	
	SCN	
	SES	
	SOD	
	SSI	
	TII	
	TIID	
	TIIF	
	UPI	
1N350	ITT	251 - 95
	SCA	
	SSI	
	UPI	
	WSI	
1N351	SCA	254 - 91
	SSI	
	WSI	
1N352	SCA	256 - 62
	SSI	
	WSI	
1N353	SCA	247 - 63
	SSI	
	UPI	
1N354	SCA	259 - 4
	SSI	
1N355	GELC	252 - 77
	ITT	
	SES	
	SSI	
	TEC	
	UPI	
1N358	♦△ALP	517 - 39
	MIC	
1N358A	♦△ALP	517 - 40
	MIC	
JAN1N358A,AM,AMR,AR	ALP	517 - 1
1N359	BRA	292 - 84
	ETC	
	GIC	
	IDC	
	INRB	
	INRC	
	INRI	
	INRJ	
	ITT	
	SCN	
	SES	
	SSI	
	TEC	
	UPI	
1N359A	BRA	292 - 88
	ETC	
	GIC	
	IDC	
	ITT	
	SCN	
	SSI	
	TEC	
	UPI	
1N360	BRA	298 -101
	ETC	
	GIC	
	IDC	
	ITT	
	SCN	
	SES	
	SSI	
	TEC	
	UPI	
1N360A	BRA	298 -110
	ETC	
	GIC	
	IDC	
	ITT	
	SCN	
	SSI	
	TEC	
	UPI	
1N361	BRA	309 - 65
	ETC	
	GIC	
	IDC	
	ITT	
	SCN	
	SES	
	SSI	
	TEC	
	UPI	
1N361A	BRA	309 - 72
	ETC	
	GIC	
	IDC	
	ITT	
	SCN	
	SSI	
	TEC	
	UPI	
1N362	BRA	327 - 25
	ETC	
	GIC	
	ITT	
	SCN	
	SES	
	SSI	
	TEC	
	UPI	
1N362A	BRA	327 - 26
	ETC	
	GIC	
	ITT	
	SCN	
	SSI	
	TEC	
	UPI	
1N363	BRA	338 -102
	ETC	
	GIC	
	IDC	
	ITT	
	SCN	
	SES	
	SSI	
	TEC	
1N363A	BRA	338 -106
	ETC	
	GIC	
	ITT	
	SCN	
	SSI	
	TEC	
1N364	BRA	366 - 90
	ETC	
	SCN	
	SSI	
	TEC	
1N364A	BRA	366 - 91

cont next col.

TYPE No.	MFRS	Pg&Line
1N364A (cont)	ETC	
	ITT	
	SCN	
	SES	
	SSI	
	TEC	
1N365	BRA	369 - 31
	ETC	
	SCN	
	SSI	
	TEC	
1N365A	BRA	369 - 53
	ETC	
	ITT	
	SCN	
	SES	
	SSI	
	TEC	
1N367	ITT	246 - 71
	KEM	
	SES	
	UPI	
1N368	IDC	309 - 64
	UPI	
1N369	♦△ALP	517 - 41
	IDC	
	MIC	
1N369A	♦△ALP	517 - 42
	IDC	
	MIC	
1N370	IDC	165 -102
	SDI	
	TSC	
	WSI	
1N371	IDC	165 -149
	SDI	
	TSC	
	WSI	
1N372	IDC	166 - 76
	SDI	
	TSC	
	WSI	
1N373	IDC	167 - 93
	SDI	
	TSC	
	WSI	
1N374	IDC	169 - 33
	SDI	
	TSC	
	WSI	
1N375	IDC	169 - 34
	SDI	
	TSC	
	WSI	
1N376	IDC	171 - 60
	SDI	
	TSC	
	WSI	
1N377	IDC	173 -178
	SDI	
	TSC	
	WSI	
1N378	IDC	179 - 16
	SDI	
	TSC	
	WSI	
1N379	ETC	246 - 33
	HSC	
	IDC	
	ITT	
	SDI	
	SES	
	TSC	
	UPI	
	WSI	
1N380	ETC	246 - 45
	HSC	
	IDC	
	ITT	
	SDI	
	SES	
	TSC	
	UPI	
	WSI	
1N381	ETC	246 - 63
	HSC	
	IDC	
	ITT	
	SDI	
	SES	
	TSC	
	UPI	
	WSI	
1N382	ETC	246 - 70
	HSC	
	IDC	
	ITT	
	SDI	
	SES	
	TSC	
	UPI	
	WSI	
1N383	ETC	246 - 96
	HSC	
	IDC	
	ITT	
	SDI	
	SES	
	TSC	
	UPI	
	WSI	
1N384	ETC	247 - 36
	HSC	
	IDC	
	ITT	
	SDI	
	SES	
	TSC	
	UPI	
	WSI	
1N385	ETC	247 - 84
	HSC	
	IDC	
	ITT	
	SDI	
	SES	
	TSC	
	UPI	
	WSI	
1N386	ETC	248 - 57
	HSC	
	ITT	
	SDI	
	SES	
	TSC	
	UPI	
	WSI	
1N387	ETC	248 - 95
	HSC	
	IDC	
	ITT	
	SDI	
	SES	
	TSC	
	UPI	
	WSI	
1N388	ETC	249 - 73
	HSC	
	ITT	
	SDI	
	SES	
	TSC	
	UPI	
	WSI	
1N389	HSC	250 - 84
	IDC	
	ITT	
	SDI	
	SES	
	TSC	
	UPI	
	WSI	
1N390	HSC	251 - 64
	IDC	
	ITT	
	SDI	
	SES	
	TSC	
	UPI	
	WSI	
1N391	HSC	253 - 12
	IDC	
	ITT	
	SDI	
	SES	
	TSC	
	UPI	
	WSI	

△-Registered with JEDEC by this manufacturer

♦-Copy of mfr's data sheet may be ordered from D.A.T.A.

1. TYPE No. CROSS INDEX

IN TYPE NUMBER SEQUENCE

TYPE No.	MFRS	Pg&Line
1N392	HSC	253 - 67
IDC	ITT	
SDI	SES	
TSC	WSI	
1N393	HSC	254 - 87
IDC	ITT	
SDI	SES	
TSC	WSI	
1N394	ETC	255 - 59
IDC	ITT	
SDI	SES	
TSC	WSI	
1N411B	EDL	297 - 58
ITT	SSI	
	SYN	
1N412B	EDL	305 - 68
ITT	SSI	
	SYN	
1N413B	EDL	317 - 6
ITT	SSI	
	SYN	
1N415B	ALP	512 - 42
♦ ESMF	KEM	
MIC	MISI	
1N415C	♦ ALP	512 - 43
♦ ESMF	KEM	
MIC	MISI	
1N415D	♦ ALP	512 - 44
♦ ESMF	KEM	
MIC	MISI	
1N415E	△ MIC	512 - 45
♦ ALP	♦ ESMF	
KEM	MISI	
1N415F	♦△ ALP	512 - 46
♦ ESMF	MIC	
	MISI	
1N415G	♦ ALP	512 - 47
	MIC	
1N416B	♦ ESMF	510 - 69
KEM	MIC	
	MISI	
1N416C	♦ ALP	510 - 70
♦ ESMF	KEM	
MIC	MISI	
1N416D	♦ ALP	510 - 71
♦ ESMF	KEM	
MIC	MISI	
1N416E	△ MIC	510 - 72
♦ ALP	♦ ESMF	
KEM	MISI	
1N416F	♦△ ALP	510 - 73
♦ ESMF	MIC	
	MISI	
1N416G	♦△ ALP	510 - 74
	MIC	
1N417	IDC	273 - 81
ITT	SES	
	TEC	
1N418	IDC	273 - 82
ITT	SES	
	TEC	
1N419	IDC	276 - 46
ITT	SES	
	TEC	
1N429	♦△ CRL	174 - 74
CODI	♦ DIC	
GSE	INRB	
INRC	INRI	
INRJ	♦ MOTA	
♦ MSC	SCA	
SEN	SSI	
TEC	TNC	
TSC	WSI	
JAN1N429	CRL	174 - 75
DIC	MOTA	
TEC	TRW	
1N430	♦△ CRL	183 -121
♦ DIC	GSE	
INRB	INRC	
INRI	INRJ	
♦ MSC	SEN	
SSI	TRW	
TSC	WSI	
1N430A	♦△ CRL	183 -122
♦ DIC	GSE	
INRB	INRC	
INRI	INRJ	
MSC	SEN	
SSI	TRW	
TSC	WSI	
JAN1N430A	none	183 -123
1N430B	♦△ CRL	183 -124
♦ DIC	GSE	
MSC	SEN	
SSI	TSC	
	WSI	
JAN1N430B	none	183 -125
1N431	♦△ CRL	251 - 72
SCA	UPI	
	WSI	
1N432	△ RAYN	268 -103
IDC	ITT	
SES	TEC	
	WSI	
1N432A	△ RAYN	268 -104
IDC	ITT	
SES	WSI	
1N432B	IDC	268 -105
ITT	SES	
	WSI	
1N433	△ RAYN	280 - 97
ITT	SES	
	WSI	

TYPE No.	MFRS	Pg&Line
1N433A	△ RAYN	280 - 98
ITT	SES	
	WSI	
1N433B	ITT	280 - 99
	SES	
1N434	△ RAYN	281 - 68
SES	SGSI	
TEC	WSI	
1N434A	△ RAYN	281 - 69
SES	WSI	
1N434B	SES	281 - 70
	WSI	
1N435	GELC	248 - 96
GIC	UPI	
1N440	△ GIC	299 - 32
BRA	ETC	
GELC	GICC	
IDC	INRB	
INRC	INRI	
INRJ	ITT	
SAR	SCN	
SES	TEC	
	UPI	
1N440B	BRA	300 - 21
ETC	GELC	
GIC	GICC	
IDC	INRB	
INRC	INRI	
INRJ	ITT	
♦ RCA	SAR	
SCN	SES	
TEC	TII	
TIID	TIIF	
	UPI	
1N441	△ GIC	309 -103
BRA	ETC	
GELC	GICC	
INRB	INRC	
INRI	INRJ	
ITT	SAR	
SCN	SES	
TEC	UPI	
1N441B	BRA	310 -107
ETC	GELC	
GIC	GICC	
IDC	INRB	
INRC	INRI	
INRJ	ITT	
♦ RCA	SAR	
SCN	SES	
TEC	TII	
TIID	TIIF	
	UPI	
1N442	△ GIC	320 - 59
BRA	ETC	
GELC	GICC	
INRB	INRC	
INRI	INRJ	
ITT	SAR	
SCN	SES	
TEC	UPI	
1N442B	BRA	321 - 28
ETC	GELC	
GIC	GICC	
IDC	INRB	
INRC	INRI	
INRJ	ITT	
♦ RCA	SAR	
SCN	SES	
TEC	TII	
TIID	TIIF	
	UPI	
1N443	△ GIC	328 - 56
BRA	ETC	
GELC	GICC	
INRB	INRC	
INRI	INRJ	
ITT	SAR	
SCN	SES	
TEC	UPI	
1N443B	BRA	329 - 81
ETC	GELC	
GIC	GICC	
IDC	INRB	
INRC	INRI	
INRJ	ITT	
♦ RCA	SAR	
SCN	SES	
TEC	TII	
TIID	TIIF	
	UPI	
1N444	△ GIC	339 - 22
BRA	ETC	
GELC	GICC	
IDC	INRB	
INRC	INRI	
INRJ	ITT	
SAR	SCN	
SES	TEC	
1N444B	BRA	339 -110
ETC	GELC	
GIC	GICC	
IDC	INRB	
INRC	INRI	
INRJ	ITT	
♦ RCA	SAR	
SCN	SES	
TEC	TII	
TIID	TIIF	
1N445	△ GIC	346 - 7
BRA	ETC	
GELC	GICC	
IDC	INRB	

cont next col.

TYPE No.	MFRS	Pg&Line
1N445		
(cont.)	INRC	
INRI	INRJ	
ITT	SAR	
SCN	SES	
	TEC	
1N445B	BRA	347 - 1
ETC	GELC	
GIC	GICC	
IDC	INRB	
INRC	INRI	
INRJ	ITT	
♦ RCA	SAR	
SCN	SES	
TEC	TII	
TIID	TIIF	
1N446	♦△ ALP	518 - 45
1N447	GELC	249 - 12
GIC	ITT	
SES	SOD	
TEC	UPI	
1N448	GELC	253 - 97
IDC	ITT	
SES	TEC	
1N449	GELC	249 - 14
ITT	SES	
SOD	TEC	
	UPI	
1N450	GELC	253 - 99
IDC	ITT	
SES	SOD	
	TEC	
1N451	IDC	256 - 67
ITT	SES	
	TEC	
1N452	GELC	248 - 66
IDC	ITT	
SES	TEC	
	UPI	
1N453	GELC	254 - 77
IDC	ITT	
SES	TEC	
1N454	GELC	250 - 89
ITT	SES	
TEC	UPI	
1N455	GELC	248 - 76
ITT	SES	
TEC	UPI	
1N456	AMD	247 - 68
APD	APX	
BNT	CODI	
EAS	EMLS	
ESMF	ETC	
♦ FSC	GESY	
GIC	GICC	
HSC	IDC	
ITT	MISI	
NJRC	♦ NPC	
PHIC	♦ QUA	
RAYN	SDI	
♦ SES	SGSI	
SOIF	TEC	
♦ TII	TIID	
♦ TIIF	TRW	
TSC	UPI	
	WSI	
1N456A	△ TRW	248 - 24
AMD	APD	
♦ BNT	CODI	
EAS	FSC	
GIC	GICC	
HSC	IDC	
ITT	NJRC	
♦ NPC	QUA	
RAYN	SDI	
♦ SES	SGSI	
TEC	TII	
TIID	♦ TIIF	
TSC	UPI	
	WSI	
1N457	AMD	251 - 96
APD	APX	
BNT	CODI	
EAS	EMLS	
ESMF	ETC	
♦ FSC	GIC	
GICC	HSC	
IDC	ITT	
MISI	NJRC	
♦ NPC	PHIC	
♦ QUA	RAYN	
SDI	♦ SES	
SGSI	SOIF	
TEC	TEK	
♦ TII	TIID	
♦ TIIF	TRW	
TSC	UPI	
	WSI	
JAN1N457	CODI	298 - 40
FSC	GIC	
RAYN	TEC	
TII	TRW	
	TSC	
1N457A	△ TRW	252 - 4
AMD	♦ BNT	
CODI	EAS	
FSC	GIC	
GICC	HSC	
IDC	ITT	
NJRC	♦ NPC	
QUA	RAYN	
SDI	♦ SES	
SGSI	TEC	

cont next col

TYPE No.	MFRS	Pg&Line
1N457A		
(cont)	TEK	
TII	TIID	
♦ TIIF	TSC	
UPI	WSI	
1N457M	TRW	252 - 85
	UPI	
1N458	AMD	255 - 68
APD	APX	
BNT	CODI	
EAS	EMLS	
ETC	♦ FSC	
GIC	GICC	
HSC	ITT	
NJRC	♦ NPC	
PHIC	♦ QUA	
RAYN	SDI	
♦ SES	SGSI	
TEC	TEK	
♦ TII	TIID	
♦ TIIF	TRW	
TSC	UPI	
	WSI	
JAN1N458	CODI	307 - 47
FSC	GIC	
RAYN	TEC	
TII	TRW	
	TSC	
1N458A	△ TRW	255 - 94
AMD	APD	
♦ BNT	CODI	
EAS	FSC	
GIC	GICC	
HSC	ITT	
NJRC	♦ NPC	
QUA	RAYN	
SDI	♦ SES	
SGSI	TEC	
TEK	TII	
TIID	♦ TIIF	
TSC	WSI	
1N458M	TRW	256 - 66
1N459	AMD	256 - 97
APX	BNT	
CODI	EAS	
EMLS	ETC	
♦ FSC	GIC	
GICC	HSC	
ITT	NJRC	
♦ NPC	PHIC	
♦ QUA	RAYN	
SDI	♦ SES	
SGSI	TEC	
TEK	♦ TII	
TIID	♦ TIIF	
TRW	TSC	
UPI	WSI	
JAN1N459	CODI	309 - 54
FSC	GIC	
RAYN	TEC	
TII	TRW	
	TSC	
1N459A	△ TRW	257 - 3
AMD	BNT	
CODI	EAS	
FSC	GIC	
GICC	HSC	
ITT	NJRC	
♦ NPC	QUA	
RAYN	SDI	
♦ SES	SGSI	
TEC	TEK	
TII	TIID	
♦ TIIF	TSC	
	WSI	
1N459M	TRW	257 -108
1N460	HSC	276 - 98
ITT	SES	
UPI	WSI	
1N460A	HSC	276 - 99
ITT	SDI	
SES	WSI	
1N460B	ITT	276 -100
SES	WSI	
1N461	AMD	248 - 62
APX	CODI	
EMLS	ESMF	
FSC	GESY	
GIC	GICC	
HSC	ITT	
MISI	NJRC	
♦ NPC	PHIC	
♦ QUA	RAYN	
SDI	♦ SES	
SGSI	SOD	
SOIF	TEC	
TEK	♦ TII	
TIID	♦ TIIF	
TRW	TSC	
UPI	WSI	
1N461A	△ TRW	248 - 25
AMD	CODI	
FSC	GIC	
GICC	HSC	
ITT	NJRC	
♦ NPC	QUA	
RAYN	SDI	
♦ SES	SGSI	
TEC	TEK	
TII	TSC	
UPI	WSI	
1N462	AMD	252 - 78
APX	CODI	

cont.next col

TYPE No.	MFRS	Pg&Line
1N462		
(cont)	EMLS	
ESMF	FSC	
GIC	GICC	
HSC	ITT	
MISI	NJRC	
♦ NPC	PHIC	
♦ QUA	RAYN	
SDI	♦ SES	
SGSI	SOIF	
TEC	TEK	
♦ TII	TIID	
♦ TIIF	TRW	
TSC	UPI	
	WSI	
1N462A	△ TRW	252 - 5
AMD	CODI	
FSC	GIC	
GICC	HSC	
ITT	NJRC	
♦ NPC	QUA	
RAYN	SDI	
♦ SES	SGSI	
TEC	TEK	
TSC	UPI	
	WSI	
1N463	AMD	257 -107
APX	CODI	
EMLS	FSC	
GIC	GICC	
HSC	ITT	
NJRC	♦ NPC	
♦ QUA	RAYN	
SDI	♦ SES	
SGSI	TEC	
TEK	♦ TII	
TIID	♦ TIIF	
TRW	TSC	
	WSI	
1N463A	△ TRW	257 - 4
AMD	CODI	
FSC	GIC	
GICC	HSC	
ITT	NJRC	
♦ NPC	QUA	
RAYN	SDI	
♦ SES	TEC	
TEK	TSC	
	WSI	
1N464	AMD	256 - 63
APX	CODI	
EMLS	FSC	
GIC	GICC	
HSC	ITT	
NJRC	♦ NPC	
♦ QUA	RAYN	
SDI	♦ SES	
SGSI	TEC	
TEK	♦ TII	
TIID	♦ TIIF	
TRW	TSC	
UPI	WSI	
1N464A	△ TRW	255 - 95
AMD	CODI	
FSC	GIC	
GICC	HSC	
ITT	NJRC	
♦ NPC	QUA	
RAYN	SDI	
♦ SES	SGSI	
TEC	TEK	
TSC	WSI	
1N465	△ CRL	166 - 3
BNT	CODI	
DIC	GSE	
INRB	INRC	
INRI	INRJ	
SCA	SDI	
SEN	SSI	
TSC	USS	
	WSI	
1N465A	△ CRL	166 - 4
BNT	CODI	
DIC	GSE	
INRB	INRC	
INRI	INRJ	
SCA	SDI	
SEN	SSI	
TSC	USS	
	WSI	
1N465B	△ CRL	166 - 5
BNT	CODI	
DIC	GSE	
INRB	INRC	
INRI	INRJ	
SCA	SDI	
SEN	TSC	
USS	WSI	
1N466	△ CRL	167 - 97
BNT	CODI	
DIC	GSE	
INRB	INRC	
INRI	INRJ	
SCA	SDI	
SEN	SSI	
TSC	USS	
	WSI	
1N466A	△ CRL	167 - 98
BNT	CODI	
DIC	GSE	
INRB	INRC	
INRI	INRJ	
SCA	SDI	

cont next page

△-Registered with JEDEC by this manufacturer

♦-Copy of mfr's data sheet may be ordered from D.A.T.A.

1. TYPE No. CROSS INDEX

IN TYPE NUMBER SEQUENCE

TYPE No.	MFRS	Pg&Line
1N466A		
(cont.)	SEN	
	SSI	TSC
	USS	WSI
1N466B	△CRL	167 - 99
	BNT	CODI
	DIC	GSE
	INRB	INRC
	INRI	INRJ
	SCA	SDI
	SEN	TSC
	USS	WSI
1N467	△CRL	169 - 41
	BNT	CODI
	DIC	GSE
	INRB	INRC
	INRI	INRJ
	SCA	SDI
	SEN	SSI
	TSC	USS
		WSI
1N467A	△CRL	169 - 42
	BNT	CODI
	DIC	GSE
	INRB	INRC
	INRI	INRJ
	SCA	SDI
	SEN	SSI
	TSC	USS
		WSI
1N467B	△CRL	169 - 43
	BNT	CODI
	DIC	GSE
	INRB	INRC
	INRI	INRJ
	SCA	SDI
	SEN	TSC
	USS	WSI
1N468	△CRL	171 - 51
	BNT	CODI
	DIC	GSE
	INRB	INRC
	INRI	INRJ
	SCA	SDI
	SEN	SSI
	TSC	USS
		WSI
1N468A	△CRL	171 - 52
	BNT	CODI
	DIC	GSE
	INRB	INRC
	INRI	INRJ
	SCA	SDI
	SEN	SSI
	TSC	USS
		WSI
1N468B	△CRL	171 - 53
	BNT	CODI
	DIC	GSE
	INRB	INRC
	INRI	INRJ
	SCA	SDI
	SEN	TSC
	USS	WSI
1N469	△CRL	173-162
	BNT	CODI
	DIC	GSE
	INRB	INRC
	INRI	INRJ
	SCA	SDI
	SEN	SSI
	TSC	USS
		WSI
1N469A	△CRL	173-163
	BNT	CODI
	DIC	GSE
	INRB	INRC
	INRI	INRJ
	SCA	SDI
	SEN	SSI
	TSC	USS
		WSI
1N469B	△CRL	173-164
	BNT	CODI
	DIC	GSE
	INRB	INRC
	INRI	INRJ
	SCA	SDI
	SEN	TSC
	USS	WSI
1N470	△CRL	178-194
	BNT	CODI
	DIC	GSE
	INRB	INRC
	INRI	INRJ
	SCA	SDI
	SEN	SSI
	TSC	USS
		WSI
1N470A	△CRL	178-195
	BNT	CODI
	DIC	GSE
	INRB	INRC
	INRI	INRJ
	SCA	SDI
	SEN	SSI
	TSC	USS
		WSI
1N470B	△CRL	178-196
	BNT	CODI
	DIC	GSE
	INRB	INRC
	INRI	INRJ
cont next col		

TYPE No.	MFRS	Pg&Line
1N470B		
(cont)	SCA	
	SDI	SEN
	TSC	USS
		WSI
1N471	♦△CRL	167 - 94
	BNT	CODI
	♦DIC	GSE
	SDI	SEN
	SSI	USS
		WSI
1N471A	♦△CRL	167 - 95
	BNT	CODI
	♦DIC	GSE
	SDI	SEN
	SSI	USS
		WSI
1N471B	BNT	167 - 96
	CODI	DIC
	GSE	SDI
	SEN	SSI
	USS	WSI
1N472	♦△CRL	169 - 37
	BNT	CODI
	♦DIC	GSE
	SDI	SEN
	SSI	USS
		WSI
1N472A	♦△CRL	169 - 38
	BNT	CODI
	♦DIC	GSE
	SDI	SEN
	SSI	USS
		WSI
1N472B	BNT	169 - 39
	CODI	DIC
	GSE	SDI
	SEN	SSI
	USS	WSI
1N473	♦△CRL	171 - 47
	BNT	CODI
	♦DIC	GSE
	MSC	SDI
	SEN	SSI
	USS	WSI
1N473A	♦△CRL	171 - 48
	BNT	CODI
	♦DIC	GSE
	MSC	SDI
	SEN	SSI
	USS	WSI
1N473B	BNT	171 - 49
	CODI	DIC
	GSE	MSC
	SDI	SEN
	SSI	USS
		WSI
1N474	♦△CRL	173-157
	BNT	CODI
	♦DIC	GSE
	SDI	SEN
	SSI	USS
		WSI
1N474A	♦△CRL	173-158
	BNT	CODI
	♦DIC	GSE
	SDI	SEN
	SSI	USS
		WSI
1N474B	BNT	173-159
	CODI	DIC
	GSE	SDI
	SEN	SSI
	USS	WSI
1N475	♦△CRL	178-189
	BNT	CODI
	♦DIC	GSE
	IDC	MSC
	SDI	SEN
	SSI	USS
		WSI
1N475A	♦△CRL	178-190
	BNT	CODI
	♦DIC	GSE
	IDC	MSC
	SDI	SEN
	SSI	USS
		WSI
1N475B	BNT	178-191
	CODI	DIC
	GSE	IDC
	MSC	SDI
	SEN	SSI
	USS	WSI
1N476	△APX	253 - 31
	GELC	ITT
	PHIC	SES
		TEC
1N477	ITT	253 - 32
	PHIC	SES
		TEC
1N478	△APX	253 - 36
	GELC	ITT
	PHIC	SES
		TEC
1N479	ITT	253 - 37
	PHIC	SES
		TEC
1N480	△APX	273 - 99
	EMLS	GELC
	GIC	IDC
	ITT	PHIC
		SES

TYPE No.	MFRS	Pg&Line
1N482	△TEC	248 - 89
	AMD	BNT
	CODI	EMLS
	ETC	FSC
	GELC	GIC
	GICC	HSC
	IDC	NJRC
	♦NPC	♦QUA
	RAYN	SDI
	♦SES	SGSI
	TEK	♦TII
	TIID	♦TIIF
	TRW	TSC
	UPI	♦WAB
		WSI
1N482A	△TEC	248 - 86
	AMD	BNT
	CODI	EMLS
	ETC	FSC
	GIC	GICC
	HSC	IDC
	ITT	NJRC
	♦NPC	QUA
	RAYN	SDI
	♦SES	SGSI
	TEK	TII
	TIID	♦TIIF
	TRW	TSC
	UPI	♦WAB
		WSI
1N482B	△TEC	248 - 87
	AMD	BNT
	CODI	EMLS
	ETC	FSC
	GIC	GICC
	HSC	IDC
	ITT	NJRC
	♦NPC	QUA
	RAYN	SDI
	♦SES	SGSI
	TEK	TII
	TIID	♦TIIF
	TRW	TSC
	UPI	♦WAB
		WSI
1N482C	CODI	248 - 88
	ITT	SES
	TEK	UPI
1N483	△TEC	252 - 20
	AMD	BNT
	CODI	EMLS
	FSC	GELC
	GIC	GICC
	HSC	NJRC
	♦NPC	♦QUA
	RAYN	SDI
	♦SES	SGSI
	TEK	♦TII
	TIID	♦TIIF
	TRW	TSC
	UPI	♦WAB
		WSI
1N483A	△TEC	252 - 6
	AMD	BNT
	CODI	EMLS
	FSC	GIC
	GICC	HSC
	ITT	NJRC
	♦NPC	QUA
	RAYN	SDI
	♦SES	SGSI
	TEK	TII
	TIID	♦TIIF
	TRW	TSC
	UPI	♦WAB
		WSI
1N483AM	TEK	252 - 91
	UPI	
1N483B	△TEC	252 - 92
	AMD	APD
	BNT	CODI
	EMLS	ESMF
	FSC	GIC
	GICC	HSC
	ITT	MISI
	NJRC	♦NPC
	QUA	RAYN
	SDI	♦SES
	SGSI	TEK
	TII	TIID
	♦TIIF	TRW
	TSC	UPI
	♦WAB	WSI
JAN1N483B	FSC	252 - 93
	GIC	RAYN
	TEC	TII
	TRW	TSC
1N483BM	TEK	252 - 94
	UPI	
1N483C	ITT	252 - 7
	SES	TEK
		UPI
1N484	△TEC	255 - 22
	AMD	BNT
	CODI	EMLS
	ESMF	ETC
	FSC	GELC
	GIC	GICC
	HSC	IDC
	ITT	MISI
	NJRC	♦NPC
	♦QUA	RAYN
	SDI	♦SES
cont next col		

TYPE No.	MFRS	Pg&Line
1N484		
(cont.)	SGSI	
	TEK	♦TII
	TIID	♦TIIF
	TRW	TSC
	♦WAB	WSI
1N484A	△TEC	255 - 19
	AMD	BNT
	CODI	EMLS
	ESMF	ETC
	FSC	GIC
	GICC	HSC
	IDC	ITT
	MISI	NJRC
	♦NPC	QUA
	RAYN	SDI
	♦SES	SGSI
	TEK	♦TFKG
	TII	TIID
	♦TIIF	TRW
	TSC	♦WAB
		WSI
1N484B	△TEC	255 - 20
	AMD	BNT
	CODI	EMLS
	ETC	FSC
	GIC	GICC
	HSC	IDC
	ITT	NJRC
	♦NPC	QUA
	RAYN	SDI
	♦SES	SGSI
	TEK	TII
	TIID	♦TIIF
	TRW	TSC
	♦WAB	WSI
1N484C	ITT	255 - 21
	SES	TEK
1N485	△TEC	256 - 89
	AMD	BNT
	CODI	EMLS
	ETC	FSC
	GELC	GIC
	GICC	HSC
	IDC	ITT
	NJRC	♦NPC
	♦QUA	RAYN
	SDI	♦SES
	SGSI	SSI
	TEK	♦TII
	TIID	♦TIIF
	TRW	TSC
	UPI	♦WAB
		WSI
1N485A	△TEC	256 - 84
	AMD	♦BNT
	CODI	EMLS
	ETC	FSC
	GIC	GICC
	HSC	IDC
	ITT	NJRC
	♦NPC	QUA
	RAYN	SDI
	♦SES	SGSI
	SSI	TEK
	TII	TIID
	♦TIIF	TRW
	TSC	♦WAB
		WSI
1N485B	△TEC	257 - 5
	AMD	BNT
	CODI	EMLS
	ETC	♦FSC
	GIC	GICC
	HSC	ITT
	NJRC	♦NPC
	QUA	RAYN
	SDI	♦SES
	SGSI	SSI
	TEK	TII
	TIID	♦TIIF
	TRW	TSC
	♦WAB	WSI
JAN1N485B	FSC	257 - 6
	GIC	RAYN
	TEC	TII
	TRW	TSC
1N485C	ITT	256 - 85
	SES	TEK
1N486	△TEC	257-100
	AMD	BNT
	CODI	EMLS
	ETC	FSC
	GIC	GICC
	HSC	IDC
	ITT	NJRC
	♦NPC	QUA
	RAYN	SDI
	♦SES	SGSI
	SSI	TRW
	TSC	♦WAB
		WSI
1N486A	△TEC	257 - 98
	AMD	♦BNT
	CODI	EMLS
	ETC	FSC
	GIC	GICC
	HSC	IDC
	ITT	NJRC
	♦NPC	QUA
	RAYN	SDI
	♦SES	SGSI
	SSI	TRW
cont next col		

TYPE No.	MFRS	Pg&Line
1N486A		
(cont.)	TSC	
	♦WAB	WSI
1N486B	△TEC	258 - 13
	AMD	BNT
	CODI	ETC
	FSC	GIC
	GICC	HSC
	ITT	NJRC
	♦NPC	QUA
	RAYN	SDI
	♦SES	SGSI
	SSI	TRW
	TSC	♦WAB
		WSI
JAN1N486B	FSC	258 - 14
	GIC	RAYN
	TEC	TRW
		TSC
1N487	△TEC	258 - 77
	AMD	BNT
	CODI	EMLS
	ETC	GIC
	GICC	HSC
	IDC	ITT
	NJRC	♦NPC
	QUA	RAYN
	SDI	SSI
	TRW	WSI
1N487A	△TEC	258 - 73
	AMD	BNT
	CODI	EMLS
	ETC	GELC
	GIC	GICC
	HSC	IDC
	ITT	NJRC
	♦NPC	QUA
	RAYN	SDI
	SSI	TRW
		WSI
1N487B	AMD	258 - 74
	BNT	CODI
	NJRC	QUA
	SDI	SSI
1N488	△TEC	259 - 42
	AMD	BNT
	CODI	EMLS
	ETC	GIC
	GICC	HSC
	IDC	ITT
	NJRC	♦NPC
	QUA	RAYN
	SDI	SSI
	TRW	WSI
1N488A	△TEC	259 - 40
	AMD	BNT
	CODI	EMLS
	ETC	GIC
	GICC	HSC
	IDC	ITT
	NJRC	♦NPC
	QUA	RAYN
	SDI	SSI
	TRW	WSI
1N488B	AMD	259 - 41
	BNT	ETC
	IDC	NJRC
	QUA	SDI
		SSI
1N490	△APX	273-100
	GELC	GIC
	IDC	ITT
		SES
1N497	GELC	247 - 76
	GIC	IDC
	ITT	SDI
	SES	SOD
	TEC	UPI
1N498	GELC	249 - 70
	GIC	ITT
	SDI	SES
	SOD	TEC
		UPI
1N499	GELC	251 - 47
	GIC	IDC
	ITT	SES
	SOD	TEC
		UPI
1N500	EMLS	252 - 8
	GELC	GIC
	IDC	ITT
	SDI	SES
	SOD	TEC
	UPI	WSI
1N501	GELC	253 - 50
	GIC	IDC
	ITT	SES
		TEC
1N502	GELC	254 - 76
	GIC	ITT
	SES	TEC
1N527	IDC	246 - 35
	ITT	SES
	TEC	UPI
1N530	△GIC	299 - 29
	BRA	ETC
	GICC	IDC
	INRB	INRC
	INRI	INRJ
	ITT	SCN
	SES	TEC
	TII	UPI
1N531	△GIC	309-100
cont next page		

1. TYPE No. CROSS INDEX

IN TYPE NUMBER SEQUENCE

TYPE No.	MFRS	Pg&Line
1N531 (cont)	BRA	
	ETC	
	GICC	
	IDC	
	INRB	
	INRC	
	INRI	
	INRJ	
	ITT	
	SCN	
	SES	
	TEC	
	TII	
	UPI	
1N532	△GIC	320-56
	BRA	
	ETC	
	GICC	
	IDC	
	INRB	
	INRC	
	INRI	
	INRJ	
	ITT	
	SAR	
	SCN	
	SES	
	TEC	
	TII	
	UPI	
1N533	△GIC	328-53
	BRA	
	ETC	
	GICC	
	IDC	
	INRB	
	INRC	
	INRI	
	INRJ	
	ITT	
	SAR	
	SCN	
	SES	
	TEC	
	TII	
1N534	△GIC	339-19
	BRA	
	ETC	
	GICC	
	IDC	
	INRB	
	INRC	
	INRI	
	INRJ	
	ITT	
	SAR	
	SCN	
	SES	
	TEC	
	TII	
1N535	△GIC	346-3
	BRA	
	ETC	
	GICC	
	IDC	
	INRB	
	INRC	
	INRI	
	INRJ	
	ITT	
	SAR	
	SCN	
	SES	
	TEC	
	TII	
1N536	BRA	293-72
	ETC	
	GELC	
	GIC	
	GICC	
	IDC	
	INRB	
	INRC	
	INRI	
	INRJ	
	ITT	
♦RCA	SAR	
	SCN	
	SES	
	TEC	
♦TII	TIIB	
	TIID	
	TIIF	
	UPI	
1N537	BRA	300-22
	EDI	
	ETC	
	GELC	
	GIC	
	GICC	
	IDC	
	INRB	
	INRC	
	INRI	
	INRJ	
	ITT	
♦RCA	SAR	
	SCN	
	SES	
	TEC	
♦TII	TIIB	
	TIID	
	TIIF	
	UPI	
1N538	BRA	310-108
	EDI	
	ETC	
	GELC	
	GIC	
	GICC	
	IDC	
	INRB	
	INRC	
	INRI	
	INRJ	
	ITT	
♦RCA	SAR	
	SCN	
	SES	
	SST	
	TEC	
♦TII	TIIB	
	TIID	
	TIIF	
	UPI	
JAN1N538	GIC	318-100
	INRC	
	TEC	
1N539	BRA	321-29
	EDI	
	ETC	
	GELC	
	GIC	
	GICC	
	IDC	
	INRB	
	INRC	
	INRI	
	INRJ	
	ITT	
♦RCA	SAR	
	SCN	
	SES	
	SST	
	TEC	
♦TII	TIIB	
	TIID	
	TIIF	
	UPI	
1N540	BRA	329-82
	EDI	
	ETC	
	GELC	
	GIC	
	GICC	
	IDC	
	INRB	
	INRC	
	INRI	
	INRJ	
	ITT	
♦RCA	SAR	
	SCN	
	SES	
	SST	
	TEC	
♦TII	TIIB	
	TIID	
	TIIF	
	UPI	
JAN1N540	GIC	338-68
	INRC	
	TEC	
1N541	△APX	247-88
	ESMF	
	GELC	
	IDC	
	ITT	
	MISI	
	♦NPC	
	PHIC	
	SES	
	TEC	
	♦TFKG	
	UPI	
1N542	△APX	247-89
cont next col		

TYPE No.	MFRS	Pg&Line
1N542 (cont)	ESMF	
	GELC	
	IDC	
	ITT	
	MISI	
	♦NPC	
	PHIC	
	SES	
	♦TFKG	
	UPI	
1N543	EDL	377-47
1N543A	EDL	377-48
1N547	△GIC	347-5
	BRA	
	♦ETC	
	GELC	
	GICC	
	INRB	
	INRC	
	INRI	
	INRJ	
	ITT	
	♦RCA	
	SAR	
	SCN	
	SES	
	SST	
	TEC	
	♦TII	
	TIIB	
	TIID	
	TIIF	
JAN1N547	GIC	358-72
	INRC	
	TEC	
1N548	IDC	366-107
1N549	IDC	377-70
1N550	△GIC	299-83
	BRA	
	EDI	
	EDL	
	ETC	
	GELC	
	GICC	
	IDC	
	INRB	
	INRC	
	INRI	
	INRJ	
	ITT	
	MOTA	
	SAR	
	SCN	
	SES	
	SSI	
	TEC	
	TII	
	TIID	
	TIIF	
1N551	△GIC	310-48
	BRA	
	EDI	
	EDL	
	ETC	
	GELC	
	GICC	
	IDC	
	INRB	
	INRC	
	INRI	
	INRJ	
	ITT	
	MOTA	
	SAR	
	SCN	
	SES	
	SSI	
	TEC	
	TII	
	TIID	
	TIIF	
	UPI	
1N552	△GIC	320-94
	BRA	
	EDI	
	EDL	
	ETC	
	GELC	
	GICC	
	INRB	
	INRC	
	INRI	
	INRJ	
	ITT	
	MOTA	
	SAR	
	SCN	
	SES	
	SSI	
	TEC	
	TII	
	TIID	
	TIIF	
	UPI	
1N553	△GIC	329-8
	BRA	
	EDI	
	EDL	
	ETC	
	GELC	
	GICC	
	INRB	
	INRC	
	INRI	
	INRJ	
	ITT	
	MOTA	
	SAR	
	SCN	
	SES	
	SSI	
	TEC	
	TII	
	TIID	
	TIIF	
	UPI	
1N554	△GIC	339-63
	BRA	
	EDI	
	EDL	
	ETC	
	GELC	
	GICC	
	INRB	
	INRC	
	INRI	
	INRJ	
	ITT	
	MOTA	
	SAR	
	SCN	
	SES	
	SSI	
	TEC	
	TII	
	TIID	
	TIIF	
1N555	△GIC	346-59
	BRA	
	EDI	
	EDL	
	ETC	
	GELC	
	GICC	
	INRB	
	INRC	
	INRI	
	INRJ	
	ITT	
	MOTA	
	SAR	
	SCN	
	SES	
	SSI	
	TEC	
	TII	
	TIID	
	TIIF	
1N560	△GIC	359-23
	BRA	
	EDI	
	ETC	
	GICC	
	IDC	
	INRB	
	INRC	
	INRI	
	INRJ	
	ITT	
	SAR	
	SCN	
	SES	
	SSI	
	TEC	
	TIID	
	TIIF	
	TNC	
JAN1N560	EDI	359-95
	GIC	
1N561	△GIC	369-81
	BRA	
	EDI	
	ETC	
	GICC	
	IDC	
	INRB	
	INRC	
	INRI	
	INRJ	
	ITT	
	SAR	
	SCN	
cont next col		

TYPE No.	MFRS	Pg&Line
1N561 (cont.)	SES	
	SSI	
	SST	
	TEC	
	TIID	
	TIIF	
	TNC	
JAN1N561	EDI	370-34
1N562	△GIC	359-33
	BRA	
	EDI	
	EDL	
	ESP	
	ETC	
	GICC	
	IDC	
	INRB	
	INRC	
	INRI	
	INRJ	
	ITT	
	MOTA	
	SAR	
	SCN	
	SES	
	SSI	
	TEC	
1N563	△GIC	369-92
	BRA	
	EDI	
	EDL	
	ESP	
	ETC	
	GICC	
	IDC	
	INRB	
	INRC	
	INRI	
	INRJ	
	ITT	
	SCN	
	SES	
	SSI	
	TEC	
1N566	IDC	258-65
1N567	IDC	255-13
	ITT	
	SES	
1N568	GELC	249-90
	IDC	
	ITT	
	SES	
	UPI	
1N569	IDC	247-81
	ITT	
	SES	
	UPI	
1N570	CODI	384-76
	EDI	
	GIC	
	GICC	
	INRB	
	INRC	
	INRI	
	INRJ	
	♦SCN	
	SOIF	
	SSI	
1N571	IDC	265-31
	ITT	
	SES	
	SSI	
	TEC	
1N588	EDI	384-10
	GIC	
	ITT	
	SCN	
	SES	
	SSI	
	TNC	
	TRW	
1N589	EDI	384-33
	GIC	
	ITT	
	SCN	
	SES	
	SSI	
	TNC	
	TRW	
1N590	♦SSI	383-100
1N591	♦SSI	383-101
1N596	△INRC	345-89
	CODI	
	IDC	
	INRB	
	INRI	
	INRJ	
	ITT	
	SCN	
	SSI	
1N597	△INRC	359-7
	CODI	
	IDC	
	INRB	
	INRI	
	INRJ	
	ITT	
	SCN	
	SSI	
1N598	△INRC	369-50
	CODI	
	INRB	
	INRI	
	INRJ	
	ITT	
	SCN	
	SSI	
1N599	△INRC	293-6
	BRA	
	ETC	
	GELC	
	GIC	
	GICC	
	IDC	
	INRB	
	INRI	
	INRJ	
	ITT	
	SAR	
	SCN	
	SES	
	TEC	
	TII	
	TIID	
	TIIF	
	UPI	
1N599A	△INRC	293-7
	BRA	
	ETC	
	GELC	
	GIC	
	GICC	
	IDC	
	INRB	
	INRI	
	INRJ	
	ITT	
	SAR	
	SCN	
	SES	
	TEC	
	TII	
	TIID	
	TIIF	
	UPI	
1N600	△INRC	299-33
	BRA	
	ETC	
	GELC	
	GIC	
	GICC	
	IDC	
	INRB	
	INRI	
	INRJ	
	ITT	
	SAR	
	SCN	
	SES	
	TEC	
	TII	
	TIID	
	TIIF	
	UPI	
1N600A	△INRC	299-34
	BRA	
	ETC	
	GELC	
	GIC	
	GICC	
	IDC	
	INRB	
	INRI	
	INRJ	
	ITT	
	SAR	
	SCN	
	SES	
	TEC	
	TII	
	TIID	
	TIIF	
	UPI	
1N601	△INRC	307-62
	BRA	
	ETC	
	GELC	
	GIC	
cont next col.		

TYPE No.	MFRS	Pg&Line
1N601 (cont.)	GICC	
	IDC	
	INRB	
	INRI	
	INRJ	
	ITT	
	SAR	
	SCN	
	SES	
	TEC	
	TII	
	TIID	
	TIIF	
	UPI	
1N601A	△INRC	307-63
	BRA	
	ETC	
	GELC	
	GIC	
	GICC	
	IDC	
	INRB	
	INRI	
	INRJ	
	ITT	
	SAR	
	SCN	
	SES	
	TEC	
	TII	
	TIID	
	TIIF	
	UPI	
1N602	△INRC	309-104
	BRA	
	ETC	
	GELC	
	GIC	
	GICC	
	IDC	
	INRB	
	INRI	
	INRJ	
	ITT	
	SAR	
	SCN	
	SES	
	TEC	
	TII	
	TIID	
	TIIF	
	UPI	
1N602A	△INRC	309-105
	BRA	
	ETC	
	GELC	
	GIC	
	GICC	
	IDC	
	INRB	
	INRI	
	INRJ	
	ITT	
	SAR	
	SCN	
	SES	
	TEC	
	TII	
	TIID	
	TIIF	
	UPI	
1N603	△INRC	320-60
	BRA	
	ETC	
	GELC	
	GIC	
	GICC	
	IDC	
	INRB	
	INRI	
	INRJ	
	ITT	
	SAR	
	SCN	
	SES	
	TEC	
	TII	
	TIID	
	TIIF	
	UPI	
1N603A	△INRC	320-61
	BRA	
	ETC	
	GELC	
	GIC	
	GICC	
	IDC	
	INRB	
	INRI	
	INRJ	
	ITT	
	SAR	
	SCN	
	SES	
	TEC	
	TII	
	TIID	
	TIIF	
	UPI	
1N604	△INRC	328-57
	BRA	
	ETC	
	GELC	
	GIC	
	GICC	
	IDC	
	INRB	
	INRI	
	INRJ	
	ITT	
	SAR	
	SCN	
	SES	
	TEC	
	TII	
	TIID	
	TIIF	
	UPI	
1N604A	△INRC	328-58
	BRA	
	ETC	
	GELC	
	GIC	
	GICC	
	IDC	
	INRB	
	INRI	
	INRJ	
	ITT	
	SAR	
	SCN	
	SES	
	TEC	
	TII	
	TIID	
	TIIF	
	UPI	
1N605	△INRC	339-23
	BRA	
	ETC	
	GELC	
	GIC	
	GICC	
	IDC	
	INRB	
	INRI	
	INRJ	
	ITT	
	SAR	
	SCN	
	SES	
	TEC	
	TII	
	TIID	
	TIIF	
	UPI	
1N605A	△INRC	339-24
	BRA	
	ETC	
	GELC	
	GIC	
	GICC	
	IDC	
	INRB	
	INRI	
	INRJ	
	ITT	
	SAR	
	SCN	
	SES	
	TEC	
	TII	
	TIID	
	TIIF	
	UPI	
1N606	△INRC	346-8
	BRA	
	ETC	
	GELC	
	GIC	
	GICC	
	IDC	
	INRB	
	INRI	
	INRJ	
	ITT	
	SAR	
	SCN	
	SES	
	TEC	
	TII	
	TIID	
	TIIF	
	UPI	
1N606A	△INRC	346-9
	BRA	
	ETC	
	GELC	
	GIC	
	GICC	
	IDC	
cont next col.		

TYPE No.	MFRS	Pg&Line
1N606A (cont)	INRB	
	INRI	
	INRJ	
	ITT	
	SAR	
	SCN	
	SES	
	TEC	
	TII	
	TIID	
	TIIF	
1N607	△INRC	293-92
	BRA	
	EDI	
	EDL	
	ETC	
	GELC	
	GIC	
	GICC	
	IDC	
	INRB	
	INRI	
	INRJ	
	ITT	
	MOTA	
	SAR	
	SCN	
	SES	
	SOD	
	SSI	
	TEC	
	TII	
♦TIIB	TIID	
	TIIF	
1N607A	△INRC	293-93
	BRA	
	EDI	
	ETC	
	GELC	
	GIC	
	GICC	
	IDC	
	INRB	
	INRI	
	INRJ	
	ITT	
	MOTA	
	SAR	
	SCN	
	SES	
	SOD	
	SSI	
	TEC	
	TII	
♦TIIB	TIID	
	TIIF	
1N608	△INRC	300-58
	BRA	
	EDL	
	ETC	
	GELC	
	GIC	
	GICC	
	IDC	
	INRB	
	INRI	
	INRJ	
	ITT	
	MOTA	
	SAR	
	SCN	
	SES	
	SOD	
	SSI	
	TEC	
	TII	
♦TIIB	TIID	
	TIIF	
1N608A	△INRC	300-59
	BRA	
	EDL	
	ETC	
	GELC	
	GIC	
	GICC	
	IDC	
	INRB	
	INRI	
	INRJ	
	ITT	
	MOTA	
	SAR	
	SCN	
	SES	
	SOD	
	SSI	
	TEC	
	TII	
♦TIIB	TIID	
	TIIF	
1N609	△INRC	307-77
	BRA	
	EDL	
	ETC	
	GELC	
	GIC	
	GICC	
	INRB	
	INRI	
	INRJ	
	ITT	
	MOTA	
	SAR	
	SCN	
	SES	
	SOD	
	SSI	
	TEC	
	TII	
♦TIIB	TIID	
	TIIF	
1N609A	△INRC	307-78
	BRA	
	EDL	
	ETC	
	GELC	
	GIC	
	GICC	
	INRB	
	INRI	
	INRJ	
	ITT	
	MOTA	
	SAR	
	SCN	
	SES	
	SOD	
	SSI	
	TEC	
	TII	
♦TIIB	TIID	
	TIIF	
1N610	△INRC	311-42
	BRA	
	EDL	
	ETC	
	GELC	
	GIC	
	GICC	
	INRB	
	INRI	
	INRJ	
	ITT	
	MOTA	
	SAR	
	SCN	
	SES	
	SSI	
	TEC	
	TII	
♦TIIB	TIID	
	TIIF	
1N610A	△INRC	311-43
	BRA	
	EDL	
	ETC	
	GELC	
	GIC	
	GICC	
	INRB	
	INRI	
	INRJ	
	ITT	
	MOTA	
	SAR	
	SCN	
	SES	
	SSI	
	TEC	
	TII	
♦TIIB	TIID	
	TIIF	
1N611	△INRC	321-63
	BRA	
	EDL	
	ETC	
	GELC	
	GIC	
	GICC	
	INRB	
	INRI	
	INRJ	
	ITT	
	MOTA	
	SAR	
	SCN	
	SES	
	SSI	
	TEC	
cont.next page		

△-Registered with JEDEC by this manufacturer

♦-Copy of mfr's data sheet may be ordered from D.A.T.A.

1. TYPE No. CROSS INDEX

IN TYPE NUMBER SEQUENCE

TYPE No.	MFRS	Pg&Line
1N611 (cont)	TII	
♦TIIB	TIID	
TIIF	UPI	
1N611A	△INRC	321-64
BRA	EDL	
ETC	GELC	
GIC	GICC	
INRB	INRI	
INRJ	ITT	
MOTA	SAR	
SCN	SES	
SSI	TEC	
TII	♦TIIB	
TIID	TIIF	
	UPI	
1N612	△INRC	330-22
BRA	EDL	
ETC	GELC	
GIC	GICC	
IDC	INRB	
INRI	INRJ	
ITT	MOTA	
SAR	SCN	
SES	SOD	
SSI	TEC	
TII	♦TIIB	
TIID	TIIF	
	UPI	
1N612A	△INRC	330-23
BRA	EDL	
ETC	GELC	
GIC	GICC	
IDC	INRB	
INRI	INRJ	
ITT	MOTA	
SAR	SCN	
SES	SOD	
SSI	TEC	
TII	♦TIIB	
TIID	TIIF	
	UPI	
1N613	△INRC	340-33
BRA	EDL	
ETC	GELC	
GIC	GICC	
INRB	INRI	
INRJ	ITT	
MOTA	SAR	
SCN	SES	
SOD	SSI	
TEC	TII	
♦TIIB	TIID	
	TIIF	
1N613A	△INRC	340-34
BRA	EDL	
ETC	GELC	
GIC	GICC	
INRB	INRI	
INRJ	ITT	
MOTA	SAR	
SCN	SES	
SOD	SSI	
TEC	TII	
♦TIIB	TIID	
	TIIF	
1N614	△INRC	347-50
BRA	EDL	
ETC	GELC	
GIC	GICC	
IDC	INRB	
INRI	INRJ	
ITT	MOTA	
SAR	SCN	
SES	SOD	
SSI	TEC	
TII	♦TIIB	
TIID	TIIF	
1N614A	△INRC	347-51
BRA	EDL	
ETC	GELC	
GIC	GICC	
IDC	INRB	
INRI	INRJ	
ITT	MOTA	
SAR	SCN	
SES	SOD	
SSI	TEC	
TII	♦TIIB	
TIID	TIIF	
1N616	△APX	247-107
GELC	ITT	
SES	TEC	
	UPI	
1N617	△APX	253-33
GELC	ITT	
PHIC	SES	
	TEC	
1N618	△APX	253-38
GELC	ITT	
PHIC	SES	
	TEC	
1N619	APD	247-101
FSC	HSC	
IDC	ITT	
SDI	SES	
UPI	WSI	
1N622	CODI	255-69
FSC	ITT	
SES	SGSI	
TRW	WSI	
1N625	AMD	268-11
CODI	EMLS	

cont next col

TYPE No.	MFRS	Pg&Line
1N625 (cont)	FSC	
GESY	HSC	
IDC	ITT	
NECJ	NJRC	
NPC	RAYN	
SDI	SES	
SGSI	SOD	
TEC	♦TII	
TIID	♦TIIF	
TRW	TSC	
	WSI	
1N625A	CODI	266-8
IDC	ITT	
SES	SOD	
1N625M	IDC	268-12
1N626	AMD	272-105
CODI	EMLS	
FSC	GESY	
HSC	IDC	
ITT	NJRC	
RAYN	SDI	
SES	SGSI	
SOD	TEC	
♦TII	TIID	
♦TIIF	TRW	
TSC	WSI	
1N626A	CODI	268-80
IDC	ITT	
SES	SOD	
	WSI	
1N626M	IDC	272-106
1N627	AMD	279-104
CODI	EMLS	
FSC	HSC	
IDC	ITT	
NJRC	RAYN	
SDI	SES	
SGSI	SOD	
TEC	♦TII	
TIID	♦TIIF	
TRW	TSC	
	WSI	
1N627A	CODI	276-9
IDC	ITT	
SES	WSI	
1N628	AMD	281-48
CODI	EMLS	
FSC	HSC	
IDC	ITT	
NJRC	RAYN	
SDI	SES	
SGSI	TEC	
♦TII	TIID	
♦TIIF	TRW	
TSC	WSI	
1N628A	CODI	280-84
IDC	ITT	
SES	WSI	
1N629	AMD	283-34
CODI	EMLS	
FSC	HSC	
ITT	NJRC	
RAYN	SDI	
SES	SGSI	
TEC	♦TII	
TIID	♦TIIF	
TRW	TSC	
	WSI	
1N629A	IDC	281-64
ITT	SES	
	WSI	
1N630	♦△ALP	517-43
	MIC	
1N630A	ALP	517-2
1N631	GELC	273-83
GIC	IDC	
ITT	SDI	
SES	TEC	
1N632	GELC	273-84
GIC	IDC	
ITT	SDI	
SES	TEC	
1N633	GELC	276-86
GIC	IDC	
ITT	SDI	
SES	TEC	
1N634	GELC	255-5
GIC	IDC	
ITT	SDI	
SES	TEC	
1N635	IDC	256-68
ITT	SDI	
	SES	
1N636	APX	249-88
EMLS	ESMF	
GELC	GIC	
ITT	MISI	
♦NPC	SDI	
SES	TEC	
	UPI	
1N643	△TRW	282-102
AMD	CODI	
EMLS	ETC	
FSC	HSC	
IDC	ITT	
NJRC	RAYN	
SES	SGSI	
SSI	TEC	
♦TII	TIID	
♦TIIF	TSC	
	WSI	
JAN1N643	FSC	282-103

cont next col

TYPE No.	MFRS	Pg&Line
JAN1N643 (cont)	RAYN	
TEC	TII	
	TSC	
1N643A	AMD	282-104
CODI	EMLS	
ERI	ETC	
FSC	HSC	
ITT	NJRC	
RAYN	SDI	
SES	SGSI	
SSI	TRW	
TSC	WSI	
1N643M	TRW	282-105
1N645	♦△TII	318-92
AMD	BNT	
CNS	CODI	
EMLS	♦ESMF	
ETC	♦GIC	
GICC	GICI	
IDC	ITT	
MISI	♦NPC	
SEN	♦SES	
SOIF	SSI	
TEC	TEK	
TIIB	TIID	
♦TIIF	TNC	
TRW	UPI	
	WSI	
JAN1N645	GIC	320-6
ITT	TEC	
TII	TRW	
1N645A	♦△TII	257-102
CODI	ETC	
GESY	GIC	
ITT	SEN	
SSI	TEC	
TIID	♦TIIF	
	WSI	
1N645B	ETC	257-103
IDC	SEN	
	SSI	
1N645J	♦ERI	258-29
1N646	♦△TII	320-62
AMD	BNT	
CODI	EMLS	
♦ESMF	ETC	
♦GIC	GICC	
GICI	ITT	
MISI	♦NPC	
SEN	♦SES	
SOIF	SSI	
TEC	TEK	
TIIB	TIID	
♦TIIF	TNC	
TRW	UPI	
	WSI	
1N647	♦△TII	328-60
AMD	BNT	
CODI	EMLS	
♦ESMF	ETC	
♦GIC	GICC	
GICI	IDC	
ITT	MISI	
♦NPC	SEN	
♦SES	SOIF	
SSI	TEC	
TEK	TIIB	
TIID	♦TIIF	
TNC	TRW	
UPI	WSI	
JAN1N647	GIC	338-69
ITT	TII	
	TRW	
1N648	♦△TII	339-26
AMD	BNT	
CODI	EMLS	
♦ESMF	♦GIC	
GICC	GICI	
IDC	ITT	
MISI	♦NPC	
SEN	♦SES	
SOIF	SSI	
TEC	TEK	
TIID	♦TIIF	
TNC	TRW	
	WSI	
1N649	♦△TII	346-10
AMD	BNT	
CNS	CODI	
EMLS	♦ESMF	
♦GIC	GICC	
GICI	IDC	
ITT	MISI	
♦NPC	SEN	
♦SES	SOIF	
SSI	TEC	
TEK	TIIB	
TIID	♦TIIF	
TNC	TRW	
	WSI	
JAN1N649	GESY	358-73
GIC	ITT	
TII	TRW	
1N658	AMD	280-48
CODI	♦FSC	
HSC	IDC	
ITT	NJRC	
RAYN	SDI	
♦SES	SGSI	
SSI	TEC	
TII	TIID	
♦TIIF	TSC	
♦WAB	WSI	

TYPE No.	MFRS	Pg&Line
JAN1N658	FSC	279-42
RAYN	TEC	
	TSC	
1N658A	△RAYN	280-49
CODI	HSC	
IDC	ITT	
NJRC	SDI	
SES	SSI	
	WSI	
1N658M	CODI	279-43
	TRW	
1N659	♦△TII	272-77
AMD	CODI	
EMLS	FSC	
HSC	IDC	
ITT	NJRC	
RAYN	SDI	
♦SES	SGSI	
SOD	TEC	
TIIB	TIID	
♦TIIF	TRW	
TSC	♦WAB	
	WSI	
1N659A	△RAYN	272-78
CODI	HSC	
IDC	ITT	
SDI	SES	
TEC	WSI	
1N660	♦△TII	279-44
AMD	CODI	
FSC	HSC	
ITT	NJRC	
RAYN	♦SES	
SGSI	TEC	
TIIB	TIID	
♦TIIF	TRW	
TSC	♦WAB	
	WSI	
JAN1N660	TEC	279-45
1N660A	△RAYN	279-46
CODI	HSC	
IDC	ITT	
NJRC	SDI	
SES	WSI	
1N661	♦△TII	282-106
AMD	CODI	
FSC	HSC	
ITT	NJRC	
RAYN	SDI	
♦SES	SGSI	
TEC	TIIB	
TIID	♦TIIF	
TRW	TSC	
♦WAB	WSI	
JAN1N661	TEC	282-107
1N661A	△RAYN	282-108
CODI	IDC	
1N662	△TRW	279-80
AMD	CODI	
EMLS	♦FSC	
HSC	ITT	
NJRC	RAYN	
SDI	♦SES	
SGSI	SOD	
TEC	♦TII	
TIID	♦TIIF	
TSC	♦WAB	
JAN1N662	FSC	279-81
RAYN	TEC	
TII	TSC	
1N662A	AMD	279-82
CODI	EMLS	
FSC	HSC	
ITT	NJRC	
RAYN	SDI	
SES	SGSI	
SOD	TEC	
TRW	TSC	
1N663	△TRW	279-83
AMD	CODI	
FSC	HSC	
IDC	ITT	
NJRC	RAYN	
SDI	♦SES	
SGSI	SOD	
TEC	♦TII	
TIID	♦TIIF	
TSC	♦WAB	
	WSI	
JAN1N663	FSC	279-84
RAYN	TEC	
TII	TSC	
1N663A	AMD	278-67
CODI	FSC	
HSC	IDC	
ITT	NJRC	
RAYN	SDI	
SES	SOD	
TRW	TSC	
	WSI	
1N663M	TRW	279-47
1N664	IDC	181-127
MSC	SSI	
	WSI	
1N665	IDC	191-205
MSC	SSI	
	WSI	
1N666	IDC	197-34
MSC	SSI	
	WSI	
1N667	IDC	201-118
MSC	SSI	
	WSI	

TYPE No.	MFRS	Pg&Line
1N668	IDC	206-60
MSC	SSI	
1N669	IDC	210-125
MSC	SSI	
1N670	IDC	227-28
MSC	SSI	
1N671	IDC	233-7
MSC	SSI	
1N672	IDC	239-20
MSC	SSI	
1N673	SSI	328-61
TEC	UPI	
	WSI	
1N674	IDC	170-76
SSI	WSI	
1N675	IDC	174-140
MSC	SSI	
1N676	△TEC	299-3
CODI	ETC	
FSC	GELC	
GIC	IDC	
ITT	NJRC	
RAYN	SGSI	
SOIF	SSI	
TRW	UPI	
	WSI	
1N677	△TEC	299-35
CODI	GELC	
GIC	IDC	
ITT	SSI	
TRW	WSI	
1N678	△TEC	309-73
CODI	ETC	
FSC	GELC	
GIC	ITT	
NJRC	RAYN	
SGSI	SOIF	
SSI	TRW	
UPI	WSI	
1N679	△TEC	309-106
CODI	ETC	
GELC	GIC	
ITT	SSI	
TRW	UPI	
	WSI	
1N681	△TEC	320-25
CODI	ETC	
GELC	GIC	
IDC	ITT	
NJRC	RAYN	
SSI	TRW	
UPI	WSI	
1N682	△TEC	320-32
CODI	ETC	
GELC	GIC	
ITT	SSI	
TRW	UPI	
	WSI	
1N683	△TEC	328-14
CODI	ETC	
GELC	GIC	
ITT	NJRC	
RAYN	SOIF	
SSI	TRW	
UPI	WSI	
1N684	△TEC	328-27
CODI	ETC	
GELC	GIC	
ITT	SSI	
TRW	UPI	
	WSI	
1N685	△TEC	338-97
CODI	GELC	
GIC	IDC	
ITT	NJRC	
RAYN	SSI	
TRW	WSI	
1N686	△TEC	338-107
CODI	GELC	
GIC	IDC	
ITT	SSI	
TRW	WSI	
1N687	△TEC	345-75
CODI	ETC	
GELC	GIC	
IDC	ITT	
NJRC	RAYN	
SOIF	SSI	
TRW	WSI	
1N689	△TEC	345-92
CODI	GELC	
GIC	IDC	
ITT	SSI	
TRW	WSI	
1N690	AMD	268-88
CODI	GIC	
HSC	IDC	
ITT	NJRC	
RAYN	SDI	
SES	SSI	
TEC	TSC	
	WSI	
1N691	AMD	276-55
GIC	HSC	
IDC	ITT	
NJRC	RAYN	
SDI	SES	
SSI	TEC	
TSC	WSI	
JAN1N691	RAYN	273-101
1N692	AMD	279-103
HSC	IDC	
ITT	NJRC	

cont.next page

△-Registered with JEDEC by this manufacturer

♦-Copy of mfr's data sheet may be ordered from D.A.T.A.

1. TYPE No. CROSS INDEX

IN TYPE NUMBER SEQUENCE

TYPE No.	MFRS	Pg&Line
1N692 (cont)	RAYN	
	SDI	SES
	SSI	TEC
		WSI
1N693	AMD	280- 92
	HSC	IDC
	ITT	NJRC
	RAYN	SDI
	SES	SSI
	TEC	WSI
1N695	♦△TEC	266- 4
	BNT	EMLS
	GELC	GIC
	IDC	ITT
	SDI	SES
1N695A	△TEC	266-103
	BNT	GELC
	IDC	ITT
	NJRC	SES
		SOD
1N696	CODI	269- 31
	HSC	IDC
	ITT	SDI
	SES	SSI
	TEC	WSI
1N697	CODI	280- 38
	HSC	ITT
	NJRC	RAYN
	SDI	SES
	SSI	TEC
		WSI
JAN1N697	RAYN	280- 39
1N698	△APX	265- 29
	IDC	ITT
	PHIC	SES
1N699	GELC	280- 18
	IDC	ITT
	SES	TEC
1N701	CNS	187-119
	IDC	MSC
		WSI
1N702	♦△CRL	166- 6
	BNT	CNS
	CODI	♦DIC
	EMLS	ETC
	GSE	IDC
	INRB	INRC
	INRI	INRJ
	MOTA	♦NPC
	SDI	SEN
	SOD	♦SSI
	TEC	TEK
	♦TII	TNC
	TRW	TSC
	USS	WSI
1N702A	BNT	166- 7
	CODI	♦CRL
	♦DIC	EMLS
	ETC	GSE
	IDC	INRB
	INRC	INRI
	INRJ	MOTA
	♦NPC	SDI
	SEN	SOD
	SSI	TEC
	TEK	♦TII
	TNC	TRW
	TSC	USS
		WSI
1N703	♦△CRL	167-100
	BNT	CNS
	CODI	♦DIC
	EMLS	ETC
	GSE	IDC
	INRB	INRC
	INRI	INRJ
	MOTA	♦NPC
	SDI	SEN
	SOD	SSI
	TEC	TEK
	♦TII	TNC
	TRW	TSC
	USS	WSI
1N703A	BNT	167-101
	CODI	♦CRL
	♦DIC	EMLS
	ETC	GSE
	IDC	INRB
	INRC	INRI
	INRJ	MOTA
	♦NPC	SDI
	SEN	SOD
	SSI	TEC
	TEK	♦TII
	TNC	TRW
	TSC	USS
		WSI
1N704	♦△CRL	169- 44
	BNT	CNS
	CODI	♦DIC
	EMLS	ETC
	GSE	IDC
	INRB	INRC
	INRI	INRJ
	MOTA	♦NPC
	SDI	SEN
	SOD	SSI
	TEC	TEK
	♦TII	TNC
	TRW	TSC
	USS	WSI
1N704A	BNT	170- 19

cont next col

TYPE No.	MFRS	Pg&Line
1N704A (cont)	CODI	
	♦CRL	♦DIC
	EMLS	ETC
	GSE	IDC
	INRB	INRC
	INRI	INRJ
	MOTA	♦NPC
	SDI	SEN
	SOD	SSI
	TEC	TEK
	♦TII	TNC
	TRW	TSC
	USS	WSI
1N705	♦△CRL	171- 36
	BNT	CNS
	CODI	♦DIC
	EMLS	ETC
	GSE	IDC
	INRB	INRC
	INRI	INRJ
	MOTA	MSC
	♦NPC	SDI
	SEN	SOD
	SSI	TEC
	TEK	♦TII
	TNC	TRW
	TSC	USS
		WSI
1N705A	BNT	171- 37
	CODI	♦CRL
	♦DIC	EMLS
	ETC	GSE
	IDC	INRB
	INRC	INRI
	INRJ	MOTA
	MSC	♦NPC
	SDI	SEN
	SOD	SSI
	TEC	TEK
	♦TII	TNC
	TRW	TSC
	USS	WSI
1N706	♦△CRL	173-165
	BNT	CNS
	CODI	♦DIC
	EMLS	ETC
	GSE	IDC
	INRB	INRC
	INRI	INRJ
	MOTA	MSC
	♦NPC	SDI
	SEN	SOD
	SSI	TEC
	TEK	♦TII
	TNC	TRW
	TSC	USS
		WSI
1N706A	BNT	173-166
	CODI	♦CRL
	♦DIC	EMLS
	ETC	GSE
	IDC	INRB
	INRC	INRI
	INRJ	MOTA
	MSC	♦NPC
	SDI	SEN
	SOD	SSI
	TEC	TEK
	♦TII	TNC
	TRW	TSC
	USS	WSI
1N707	♦△CRL	179- 1
	BNT	CNS
	CODI	♦DIC
	EMLS	ETC
	GSE	IDC
	INRB	INRC
	INRI	INRJ
	MOTA	MSC
	♦NPC	SDI
	SEN	SOD
	SSI	TEC
	TEK	♦TII
	TNC	TRW
	TSC	USS
		WSI
1N707A	BNT	179- 2
	CODI	♦CRL
	♦DIC	EMLS
	ETC	GSE
	IDC	INRB
	INRC	INRI
	INRJ	MOTA
	MSC	♦NPC
	SDI	SEN
	SOD	SSI
	TEC	TEK
	♦TII	TNC
	TRW	TSC
	USS	WSI
1N708,A	♦△CRL	172-109
	ASC	BNT
	CNS	CODI
	♦DIC	EMLS
	ETC	GSE
	IDC	INRB
	INRC	INRI
	INRJ	MOTA
	MSC	♦NPC
	SAR	SDI
	SEN	SOD
	SOIF	SSI
cont next col		

TYPE No.	MFRS	Pg&Line
1N708,A (cont)	TEC	
	TEK	♦TII
	TNC	TRW
	TSC	USS
		WSI
1N708B	BNT	172-110
		SAR
1N709,A	♦△CRL	174- 81
	ASC	BNT
	CNS	CODI
	♦DIC	EMLS
	ETC	GSE
	IDC	INRB
	INRC	INRI
	INRJ	MOTA
	MSC	♦NPC
	SAR	SDI
	SEN	SOD
	SOIF	SSI
	TEC	TEK
	♦TII	TNC
	TRW	TSC
	USS	WSI
1N709B	BNT	174- 82
	IDC	SAR
1N710,A	♦△CRL	176-208
	APD	ASC
	BNT	CNS
	CODI	♦DIC
	EMLS	ETC
	GSE	IDC
	INRB	INRC
	INRI	INRJ
	MOTA	MSC
	♦NPC	SAR
	SDI	SEN
	SOD	SOIF
	SSI	TEC
	TEK	♦TII
	TNC	TRW
	TSC	UNI
	USS	WSI
1N710B	APD	176-209
	BNT	IDC
		SAR
1N711,A	♦△CRL	179- 42
	APD	ASC
	BNT	CNS
	CODI	♦DIC
	EMLS	ETC
	GSE	IDC
	INRB	INRC
	INRI	INRJ
	MOTA	MSC
	♦NPC	SAR
	SDI	SEN
	SOD	SOIF
	SSI	TEC
	TEK	♦TII
	TNC	TRW
	TSC	UNI
	USS	WSI
1N711B	APD	179- 43
	BNT	IDC
		SAR
1N712	♦△CRL	181- 94
	APD	ASC
	BNT	CNS
	CODI	DIC
	EMLS	ETC
	GSE	IDC
	INRB	INRC
	INRI	INRJ
	ITT	MOTA
	MSC	♦NPC
	SAR	SDI
	SEN	SOD
	SOIF	SSI
	TEC	TEK
	♦TII	TNC
	TRW	TSC
	UNI	USS
		WSI
1N712A	♦△CRL	181- 95
	APD	ASC
	BNT	CNS
	CODI	DIC
	EMLS	ETC
	GSE	IDC
	INRB	INRC
	INRI	INRJ
	ITT	KSC
	MOTA	MSC
	♦NPC	SAR
	SDI	SEN
	SOD	SOIF
	SSI	TEC
	TEK	♦TII
	TNC	TRW
	TSC	UNI
	USS	WSI
1N712B	APD	181- 96
	BNT	IDC
	KSC	SAR
1N713,A	♦△CRL	185- 4
	APD	ASC
	BNT	CNS
	CODI	♦DIC
	EMLS	ESP
	ETC	GSE
	IDC	INRB
	INRC	INRI
cont next col		

TYPE No.	MFRS	Pg&Line
1N713,A (cont)	INRJ	
	ITT	MOTA
	MSC	♦NPC
	SAR	SDI
	SEN	SOD
	SOIF	SSI
	TEC	TEK
	♦TII	TNC
	TRW	TSC
	UNI	USS
		WSI
1N713B	APD	185- 5
	BNT	IDC
		SAR
1N714,A	♦△CRL	187- 87
	APD	ASC
	BNT	CNS
	CODI	♦DIC
	EMLS	ESP
	ETC	GSE
	IDC	INRB
	INRC	INRI
	INRJ	ITT
	MOTA	MSC
	♦NPC	SAR
	SDI	SEN
	SOD	SOIF
	SSI	TEC
	TEK	♦TII
	TNC	TRW
	TSC	UNI
	USS	WSI
1N714B	APD	187- 88
	BNT	IDC
		SAR
1N715,A	♦△CRL	189-134
	APD	ASC
	BNT	CNS
	CODI	♦DIC
	EMLS	ESP
	ETC	GSE
	IDC	INRB
	INRC	INRI
	INRJ	ITT
	MOTA	MSC
	♦NPC	SAR
	SDI	SEN
	SOD	SOIF
	SSI	TEC
	TEK	♦TII
	TNC	TRW
	TSC	UNI
	USS	WSI
1N715B	APD	189-135
	BNT	IDC
		SAR
1N716,A	♦△CRL	191-171
	APD	ASC
	BNT	CNS
	CODI	♦DIC
	EMLS	ESP
	ETC	GSE
	IDC	INRB
	INRC	INRI
	INRJ	ITT
	MOTA	MSC
	♦NPC	SAR
	SDI	SEN
	SOD	SOIF
	SSI	TEC
	TEK	♦TII
	TNC	TRW
	TSC	UNI
	USS	WSI
1N716B	APD	191-172
	BNT	IDC
		SAR
1N717,A	♦△CRL	194- 69
	APD	ASC
	BNT	CNS
	CODI	♦DIC
	EMLS	ESP
	ETC	GSE
	IDC	INRB
	INRC	INRI
	INRJ	ITT
	MOTA	MSC
	♦NPC	SAR
	SDI	SEN
	SOD	SOIF
	TEC	TEK
	TNC	TRW
	TSC	UNI
	USS	WSI
1N717B	APD	194- 70
	BNT	IDC
		SAR
1N718,A	♦△CRL	197- 10
	APD	ASC
	BNT	CNS
	CODI	♦DIC
	EMLS	ESP
	ETC	GSE
	IDC	INRB
	INRC	INRI
	INRJ	ITT
	MOTA	MSC
	♦NPC	SAR
	SDI	SEN
	SOD	SOIF
	TEC	TEK
	TNC	TRW
cont next col		

TYPE No.	MFRS	Pg&Line
1N718,A (cont.)	TSC	
	UNI	USS
		WSI
1N718B	APD	197- 11
	BNT	IDC
		SAR
1N719,A	♦△CRL	199- 20
	APD	ASC
	BNT	CNS
	CODI	♦DIC
	EMLS	ESP
	ETC	GSE
	IDC	INRB
	INRC	INRI
	INRJ	ITT
	MOTA	MSC
	♦NPC	SAR
	SDI	SEN
	SOD	SOIF
	TEC	TEK
	TNC	TRW
	TSC	UNI
	USS	WSI
1N719B	APD	199- 21
	BNT	IDC
		SAR
1N720,A	♦△CRL	201- 93
	APD	ASC
	BNT	CNS
	CODI	♦DIC
	EMLS	ESP
	ETC	GSE
	IDC	INRB
	INRC	INRI
	INRJ	ITT
	MOTA	MSC
	♦NPC	SAR
	SDI	SEN
	SOD	SOIF
	TEC	TEK
	TNC	TRW
	TSC	UNI
	USS	WSI
1N720B	APD	201- 94
	BNT	IDC
		SAR
1N721,A	♦△CRL	204- 75
	APD	ASC
	CNS	CODI
	♦DIC	EMLS
	ESP	ETC
	GSE	IDC
	INRB	INRC
	INRI	INRJ
	ITT	MOTA
	MSC	♦NPC
	SAR	SDI
	SEN	SOD
	SOIF	TEC
	TEK	TNC
	TSC	UNI
		USS
1N721B	APD	204- 76
		SAR
1N722,A	♦△CRL	206- 42
	APD	ASC
	CNS	CODI
	♦DIC	EMLS
	ESP	ETC
	GSE	IDC
	INRB	INRC
	INRI	INRJ
	ITT	MOTA
	MSC	♦NPC
	SAR	SDI
	SEN	SOD
	SOIF	TEC
	TEK	TNC
	TSC	UNI
		USS
1N722B	APD	206- 43
	IDC	SAR
1N723,A	♦△CRL	208- 46
	APD	ASC
	CNS	CODI
	♦DIC	EMLS
	ESP	ETC
	GSE	IDC
	INRB	INRC
	INRI	INRJ
	ITT	MOTA
	MSC	♦NPC
	SAR	SDI
	SEN	SOD
	SOIF	TEC
	TEK	TNC
	TSC	UNI
		USS
1N723B	APD	208- 47
	IDC	SAR
1N724,A	♦△CRL	210-112
	APD	ASC
	CNS	CODI
	♦DIC	EMLS
	ESP	ETC
	GSE	IDC
	INRB	INRC
	INRI	INRJ
	ITT	MOTA
	MSC	♦NPC
	SAR	SDI
	SEN	SOD
	SOIF	TEC
	TEK	TNC
	TSC	UNI
cont next page		

△-Registered with JEDEC by this manufacturer

♦-Copy of mfr's data sheet may be ordered from D.A.T.A.

1. TYPE No. CROSS INDEX

IN TYPE NUMBER SEQUENCE

TYPE No	MFRS	Pg&Line
1N724,A		
(cont.)	SOIF	
	TEC	TEK
	TNC	TSC
	UNI	USS
1N724B	APD	210-113
	IDC	SAR
1N725,A	♦△CRL	212-150
	APD	ASC
	CNS	CODI
	♦DIC	EMLS
	ESP	GSE
	IDC	INRB
	INRC	INRI
	INRJ	ITT
	MOTA	MSC
	♦NPC	SAR
	SDI	SEN
	SOD	SOIF
	TEC	TEK
	TNC	TSC
	UNI	USS
1N725B	APD	212-151
	IDC	SAR
1N726,A	♦△CRL	214-99
	APD	ASC
	CNS	CODI
	♦DIC	EMLS
	ESP	GSE
	IDC	INRB
	INRC	INRI
	INRJ	ITT
	MOTA	MSC
	♦NPC	SAR
	SDI	SEN
	SOD	SOIF
	TEC	TEK
	TNC	TSC
	UNI	USS
1N726B	APD	214-100
	IDC	SAR
1N727,A	♦△CRL	216-65
	ASC	CNS
	CODI	♦DIC
	ESP	GSE
	IDC	ITT
	MOTA	MSC
	♦NPC	SAR
	SDI	SEN
	SOIF	TEC
	TEK	TNC
	TSC	UNI
		USS
1N727B	IDC	216-66
	SAR	
1N728,A	♦△CRL	217-140
	ASC	CNS
	CODI	♦DIC
	ESP	GSE
	IDC	ITT
	MOTA	MSC
	♦NPC	SAR
	SDI	SEN
	SOIF	TEC
	TEK	TNC
	TSC	UNI
		USS
1N728B	IDC	217-116
	SAR	
1N729,A	♦△CRL	219-45
	ASC	CNS
	CODI	♦DIC
	ESP	GSE
	IDC	ITT
	MOTA	MSC
	♦NPC	SAR
	SDI	SEN
	SOIF	TEC
	TEK	TNC
	TSC	UNI
		USS
1N729B	IDC	219-46
	SAR	
1N730,A	♦△CRL	220-166
	ASC	CNS
	CODI	♦DIC
	ESP	GSE
	IDC	ITT
	MOTA	MSC
	♦NPC	SAR
	SDI	SEN
	SOIF	TEC
	TEK	TNC
	TSC	UNI
		USS
1N730B	IDC	220-167
	SAR	
1N731,A	♦△CRL	222-125
	ASC	CNS
	CODI	♦DIC
	ESP	GSE
	IDC	ITT
	MOTA	MSC
	♦NPC	SAR
	SDI	SEN
	SOIF	TEC
	TEK	TNC
	TSC	UNI
		USS
1N731B	IDC	222-126
	SAR	
1N732,A	♦△CRL	224-16
	ASC	CNS
	IDC	ITT
cont next col		

TYPE No.	MFRS	Pg&Line
1N732,A		
(cont)	CODI	
	♦DIC	ESP
	GSE	IDC
	ITT	MOTA
	MSC	♦NPC
	SAR	SDI
	SEN	SOIF
	TEC	TEK
	TNC	TSC
	UNI	USS
1N732B	IDC	224-17
	SAR	
1N733,A	♦△CRL	225-156
	ASC	CNS
	CODI	♦DIC
	ESP	GSE
	IDC	ITT
	MOTA	MSC
	♦NPC	SAR
	SDI	SEN
	SOIF	TEC
	TEK	TNC
	TSC	UNI
		USS
1N733B	IDC	225-157
	SAR	
1N734,A	♦△CRL	227-24
	ASC	CNS
	CODI	♦DIC
	ESP	GSE
	IDC	ITT
	MOTA	MSC
	♦NPC	SAR
	SDI	SEN
	SOIF	TEC
	TEK	TNC
	TSC	UNI
		USS
1N734B	IDC	227-25
	SAR	
1N735,A	♦△CRL	228-126
	ASC	CNS
	CODI	♦DIC
	ESP	GSE
	IDC	ITT
	MOTA	MSC
	♦NPC	SAR
	SDI	SEN
	SOIF	TEC
	TEK	TNC
	TSC	UNI
		USS
1N735B	IDC	228-127
	SAR	
1N736,A	♦△CRL	230-24
	ASC	CNS
	CODI	♦DIC
	ESP	GSE
	IDC	ITT
	MOTA	MSC
	♦NPC	SAR
	SDI	SEN
	SOIF	TEC
	TEK	TNC
	TSC	UNI
		USS
1N736B	IDC	230-25
	SAR	
1N737,A	♦△CRL	231-149
	ASC	CNS
	CODI	♦DIC
	ESP	GSE
	IDC	ITT
	MOTA	MSC
	♦NPC	SAR
	SDI	SEN
	SOIF	TEC
	TEK	TNC
	UNI	USS
1N737B	IDC	231-150
	SAR	
1N738,A	♦△CRL	233-3
	ASC	CNS
	CODI	♦DIC
	ESP	GSE
	IDC	ITT
	MOTA	MSC
	♦NPC	SAR
	SDI	SEN
	SOIF	TEC
	TEK	TNC
	UNI	USS
1N738B	IDC	233-4
	SAR	
1N739,A	♦△CRL	234-143
	ASC	CNS
	CODI	♦DIC
	ESP	GSE
	IDC	ITT
	MOTA	MSC
	♦NPC	SAR
	SEN	SOIF
	TEC	TEK
	TNC	UNI
		USS
1N739B	IDC	234-144
	SAR	
1N740,A	♦△CRL	236-4
	ASC	CNS
	CODI	♦DIC
	ESP	GSE
	IDC	ITT
cont next col		

TYPE No.	MFRS	Pg&Line
1N740,A		
(cont)	MOTA	
	MSC	♦NPC
	SAR	SEN
	SOIF	TEC
	TEK	TNC
	UNI	USS
1N740B	IDC	236-5
	SAR	
1N741,A	♦△CRL	237-48
	ASC	CNS
	CODI	♦DIC
	ESP	GSE
	IDC	ITT
	MOTA	MSC
	♦NPC	SAR
	SEN	SLCB
	SOIF	TEC
	TEK	TNC
	UNI	USS
1N741B	IDC	237-49
	SAR	
1N742,A	♦△CRL	239-17
	ASC	CNS
	CODI	♦DIC
	ESP	GSE
	IDC	ITT
	MOTA	MSC
	♦NPC	SAR
	SEN	SOIF
	TEC	TEK
	TNC	UNI
		USS
1N742B	IDC	239-18
	SAR	
1N743,A	♦△CRL	240-53
	ASC	CNS
	CODI	♦DIC
	ESP	GSE
	IDC	ITT
	MOTA	MSC
	♦NPC	SAR
	SEN	SOIF
	TEC	TEK
	TNC	UNI
		USS
1N743B	IDC	240-54
	SAR	
1N744,A	♦△CRL	241-149
	ASC	CNS
	CODI	♦DIC
	ESP	GSE
	IDC	ITT
	MOTA	MSC
	♦NPC	SAR
	SEN	SOIF
	TEC	TEK
	TNC	UNI
		USS
1N744B	IDC	241-150
	SAR	
1N745,A	♦△CRL	243-30
	ASC	CNS
	CODI	♦DIC
	ESP	GSE
	IDC	ITT
	MOTA	MSC
	SAR	SEN
	TEC	TEK
	TNC	UNI
		USS
1N745B	IDC	243-31
	SAR	
1N746	△TII	166-174
	ASC	BNT
	CNS	CODI
	♦CRL	♦DIC
	♦ETC	FSC
	GSE	HSC
	IDC	INRB
	INRC	INRI
	INRJ	MOTA
	NPC	SDI
	SEN	SES
	SLCB	SOD
	TEC	TEK
	TIID	TIIF
	TNC	TRW
	TSC	USS
		WSI
1N746A	△TII	166-175
	ASC	BNT
	CNS	CODI
	♦CRL	♦DIC
	♦ETC	♦FSC
	GSE	HSC
	IDC	INRB
	INRC	INRI
	INRJ	MOTA
	♦MULB	NPC
	SDI	SEN
	SES	SLCB
	SOD	TEC
	TEK	TNC
	TRW	TSC
	USS	WSI
JAN1N746A	CODI	166-176
	CRL	DIC
	INRC	MOTA
	TEC	TII
	TSC	USS
1N747	△TII	167-130
	ASC	BNT
cont next col		

TYPE No.	MFRS	Pg&Line
1N747		
(cont.)	CNS	
	CODI	♦CRL
	♦DIC	♦ETC
	FSC	GSE
	HSC	IDC
	INRB	INRC
	INRI	INRJ
	MOTA	NPC
	SDI	SEN
	SES	SLCB
	SOD	TEC
	TEK	TIIB
	TIID	TIIF
	TNC	TRW
	TSC	USS
		WSI
1N747A	△TII	167-131
	ASC	BNT
	CNS	CODI
	♦CRL	♦DIC
	♦ETC	♦FSC
	GSE	HSC
	IDC	INRB
	INRC	INRI
	INRJ	MOTA
	♦MULB	NPC
	SDI	SEN
	SLCB	SOD
	TEC	TEK
	TIIB	TNC
	TRW	TSC
	USS	WSI
JAN1N747A	CODI	167-132
	CRL	DIC
	INRC	MOTA
	TEC	TII
	TSC	USS
1N748	△TII	168-84
	ASC	BNT
	CNS	CODI
	♦CRL	♦DIC
	♦ETC	FSC
	GSE	HSC
	IDC	INRB
	INRC	INRI
	INRJ	MOTA
	NPC	SDI
	SEN	SES
	SLCB	SOD
	TEC	TEK
	TIIB	TIID
	TIIF	TNC
	TRW	TSC
	USS	WSI
1N748A	△TII	168-85
	ASC	BNT
	CNS	CODI
	♦CRL	♦DIC
	♦ETC	♦FSC
	GSE	HSC
	IDC	INRB
	INRC	INRI
	INRJ	MOTA
	♦MULB	NPC
	♦PHIC	SDI
	SEN	SES
	SLCB	SOD
	TEC	TEK
	TIIB	TNC
	TRW	TSC
	USS	WSI
JAN1N748A	CODI	168-86
	CRL	DIC
	INRC	MOTA
	SOD	TEC
	TII	TSC
		USS
1N749	△TII	169-84
	ASC	BNT
	CNS	CODI
	♦CRL	♦DIC
	♦ETC	FSC
	GSE	HSC
	IDC	INRB
	INRC	INRI
	INRJ	MOTA
	NPC	SDI
	SEN	SES
	SLCB	SOD
	TEC	TEK
	TIIB	TIID
	TIIF	TNC
	TRW	TSC
	USS	WSI
1N749A	△TII	169-85
	ASC	BNT
	CNS	CODI
	♦CRL	♦DIC
	♦ETC	♦FSC
	GSE	HSC
	IDC	INRB
	INRC	INRI
	INRJ	MOTA
	♦MULB	NPC
	♦PHIC	SDI
	SEN	SES
	SLCB	SOD
	TEC	TEK
	TIIB	TNC
	TRW	TSC
	USS	WSI
JAN1N749A	CODI	169-86
cont next col		

TYPE No.	MFRS	Pg&Line
JAN1N749A		
(cont)	CRL	
	DIC	INRC
	MOTA	MULB
	SOD	TEC
	TII	TSC
		USS
1N750	△TII	170-77
	ASC	BNT
	CNS	CODI
	♦CRL	♦DIC
	♦ETC	♦FSC
	GSE	HSC
	IDC	INRB
	INRC	INRI
	INRJ	ITT
	MOTA	♦NPC
	SDI	SEN
	SES	SLCB
	SOD	TEC
	TEK	TIIB
	TIID	TIIF
	TNC	TRW
	TSC	USS
		WSI
1N750A	△TII	170-78
	ASC	BNT
	CNS	CODI
	♦CRL	♦DIC
	♦ETC	♦FSC
	GSE	HSC
	IDC	INRB
	INRC	INRI
	INRJ	ITT
	MOTA	♦MULB
	♦NPC	♦PHIC
	♦RADF	SDI
	SEN	SES
	SLCB	SOD
	TEC	TEK
	TIIB	TNC
	TSC	USS
		WSI
JAN1N750A	CODI	170-79
	CRL	DIC
	INRC	MOTA
	MULB	SOD
	TEC	TII
	TSC	USS
1N751	△TII	171-123
	APX	ASC
	BNT	CNS
	CODI	♦CRL
	♦DIC	♦ETC
	♦FSC	GSE
	HSC	IDC
	INRB	INRC
	INRI	INRJ
	ITT	MOTA
	♦NPC	SDI
	SEN	SES
	SLCB	SOD
	TEC	TEK
	TIIB	TIID
	TIIF	TNC
	TRW	TSC
	USS	WSI
1N751A	△TII	171-124
	APX	ASC
	BNT	CNS
	CODI	♦CRL
	♦DIC	♦ETC
	♦FSC	GSE
	HSC	IDC
	INRB	INRC
	INRI	INRJ
	ITT	MOTA
	♦MULB	♦NPC
	♦PHIC	♦RADF
	SDI	SEN
	SES	SLCB
	SOD	TEC
	TEK	TIIB
	TNC	TRW
	TSC	USS
		WSI
JAN1N751A	CODI	171-125
	CRL	DIC
	INRC	MOTA
	MULB	SOD
	TEC	TII
	TSC	USS
1N752	△TII	172-163
	APX	ASC
	BNT	CNS
	CODI	♦CRL
	♦DIC	♦ETC
	♦FSC	GSE
	HSC	IDC
	INRB	INRC
	INRI	INRJ
	ITT	MOTA
	MSC	♦NPC
	SAR	SDI
	SEN	SES
	SLCB	SOD
	SOIF	TEC
	TEK	TIIB
	TIID	TIIF
	TNC	TRW
	TSC	USS
		WSI
1N752A	△TII	172-164
cont next page		

△-Registered with JEDEC by this manufacturer

♦-Copy of mfr's data sheet may be ordered from D.A.T.A.

1. TYPE No. CROSS INDEX

IN TYPE NUMBER SEQUENCE

TYPE No.	MFRS	Pg&Line
1N752A		
(cont)		
	APX	
	ASC	
	BNT	
	CNS	
	CODI	
	♦CRL	♦DIC
	♦ETC	♦FSC
	GSE	HSC
	IDC	INRB
	INRC	INRI
	INRJ	ITT
	MOTA	MSC
	♦MULB	♦NPC
	♦PHIC	♦RADF
	SAR	SDI
	SEN	SES
	SLCB	SOD
	SOIF	TEC
	TEK	TIIB
	TNC	TRW
	TSC	USS
		WSI
JAN1N752A	CODI	172-165
	CRL	DIC
	INRC	MOTA
	MULB	SOD
	TEC	TII
	TSC	USS
1N753	△TII	174-141
	APD	APX
	ASC	BNT
	CNS	CODI
	♦CRL	♦DIC
	♦ETC	♦FSC
	GSE	HSC
	IDC	INRB
	INRC	INRI
	INRJ	ITT
	MOTA	MSC
	♦NPC	SAR
	SDI	SEN
	SES	SLCB
	SOD	SOIF
	TEC	TEK
	TIIB	TIID
	TIIF	TNC
	TRW	TSC
	USS	WSI
1N753A	△TII	174-142
	APD	APX
	ASC	BNT
	CNS	CODI
	♦CRL	♦DIC
	♦ETC	♦FSC
	GSE	HSC
	IDC	INRB
	INRC	INRI
	INRJ	ITT
	MOTA	MSC
	♦MULB	♦NPC
	♦PHIC	♦RADF
	SAR	SDI
	SEN	SES
	SLCB	SOD
	SOIF	TEC
	TEK	TIIB
	TNC	TRW
	TSC	USS
		WSI
JAN1N753A	CODI	174-143
	CRL	DIC
	FSC	INRC
	MOTA	MULB
	SOD	TEC
	TII	TSC
		USS
1N754	△TII	177-21
	APD	APX
	ASC	BNT
	CNS	CODI
	♦CRL	♦DIC
	♦ETC	♦FSC
	GSE	HSC
	IDC	INRB
	INRC	INRI
	INRJ	ITT
	MOTA	MSC
	♦NPC	SAR
	SDI	SEN
	SES	SLCB
	SOD	SOIF
	TEC	TEK
	TIIB	TIID
	TIIF	TNC
	TRW	TSC
	UNI	USS
		WSI
1N754A	△TII	177-22
	APD	APX
	ASC	BNT
	CNS	CODI
	♦CRL	♦DIC
	♦ETC	♦FSC
	GSE	HSC
	IDC	INRB
	INRC	INRI
	INRJ	ITT
	MOTA	MSC
	♦MULB	♦NPC
	♦PHIC	♦RADF
	SAR	SDI
	SEN	SES
	SLCB	SOD
	SOIF	TEC
cont next col		

TYPE No.	MFRS	Pg&Line
1N754A		
(cont)		
	TEK	
	TIIB	TNC
	TRW	TSC
	UNI	USS
		WSI
JAN1N754A	CODI	177-23
	CRL	DIC
	FSC	INRC
	MOTA	MULB
	SOD	TEC
	TII	TSC
		USS
1N755	△TII	179-74
	APD	APX
	ASC	BNT
	CNS	CODI
	♦CRL	♦DIC
	♦ETC	♦FSC
	GSE	HSC
	IDC	INRB
	INRC	INRI
	INRJ	ITT
	MOTA	MSC
	♦NPC	SAR
	SDI	SEN
	SES	SLCB
	SOIF	TEK
	TIID	TIIF
	TNC	TSC
	UNI	USS
1N755A	△TII	179-75
	APD	APX
	ASC	BNT
	CNS	CODI
	♦CRL	♦DIC
	♦ETC	♦FSC
	GSE	HSC
	IDC	INRB
	INRC	INRI
	INRJ	ITT
	MOTA	MSC
	♦MULB	♦NPC
	♦PHIC	♦RADF
	SAR	SDI
	SEN	SES
	SLCB	SOIF
	TEK	TNC
	TSC	UNI
		USS
JAN1N755A	CODI	179-76
	CRL	DIC
	FSC	INRC
	MOTA	MULB
	SOD	TEC
	TII	TSC
		USS
1N756	△TII	181-128
	APD	APX
	ASC	BNT
	CNS	CODI
	♦CRL	♦DIC
	♦ETC	♦FSC
	GSE	HSC
	IDC	INRB
	INRC	INRI
	INRJ	ITT
	MOTA	MSC
	♦NPC	SAR
	SDI	SEN
	SES	SLCB
	SOD	SOIF
	TEC	TEK
	TIIB	TIID
	TIIF	TNC
	TRW	TSC
	UNI	USS
		WSI
1N756A	△TII	181-129
	APD	APX
	ASC	BNT
	CNS	CODI
	♦CRL	♦DIC
	♦ETC	♦FSC
	GSE	HSC
	IDC	INRB
	INRC	INRI
	INRJ	ITT
	MOTA	MSC
	♦MULB	♦NPC
	♦PHIC	♦RADF
	SAR	SDI
	SEN	SES
	SLCB	SOD
	SOIF	TEC
	TEK	TIIB
	TNC	TRW
	TSC	UNI
	USS	WSI
JAN1N756A	CODI	181-130
	CRL	DIC
	FSC	INRC
	MOTA	MULB
	SOD	TEC
	TII	TSC
		USS
1N757	△TII	185-54
	APD	APX
	ASC	BNT
	CNS	CODI
	♦CRL	♦DIC
	♦ETC	♦FSC
	GSE	HSC
cont next col		

TYPE No.	MFRS	Pg&Line
1N757		
(cont)		
	IDC	
	INRB	INRC
	INRI	INRJ
	ITT	MOTA
	MSC	♦NPC
	SAR	SDI
	SEN	SES
	SLCB	SOD
	SOIF	TEC
	TEK	TIIB
	TIID	TIIF
	TNC	TRW
	TSC	UNI
	USS	WSI
1N757A	△TII	185-55
	APD	APX
	ASC	BNT
	CNS	CODI
	♦CRL	♦DIC
	♦ETC	♦FSC
	GSE	HSC
	IDC	INRB
	INRC	INRI
	INRJ	ITT
	MOTA	MSC
	♦MULB	♦NPC
	♦PHIC	♦RADF
	SAR	SDI
	SEN	SES
	SLCB	SOD
	SOIF	TEC
	TEK	TIIB
	TNC	TRW
	TSC	UNI
	USS	WSI
JAN1N757A	CODI	185-56
	CRL	DIC
	FSC	INRC
	MOTA	MULB
	SOD	TEC
	TII	TSC
		USS
1N758	△TII	187-120
	APD	APX
	ASC	BNT
	CNS	CODI
	♦CRL	♦DIC
	♦ETC	♦FSC
	GSE	HSC
	IDC	INRB
	INRC	INRI
	INRJ	ITT
	MOTA	MSC
	♦NPC	SAR
	SDI	SEN
	SES	SLCB
	SOD	SOIF
	TEC	TEK
	TIIB	TIID
	TIIF	TNC
	TRW	TSC
	UNI	USS
		WSI
1N758A	△TII	187-121
	APD	APX
	ASC	BNT
	CNS	CODI
	♦CRL	♦DIC
	♦ETC	♦FSC
	GSE	HSC
	IDC	INRB
	INRC	INRI
	INRJ	ITT
	MOTA	MSC
	♦MULB	♦NPC
	♦PHIC	♦RADF
	SAR	SDI
	SEN	SES
	SLCB	SOD
	SOIF	TEC
	TEK	TIIB
	TNC	TRW
	TSC	UNI
	USS	WSI
JAN1N758A	CODI	187-122
	CRL	DIC
	FSC	INRC
	MOTA	MULB
	SOD	TEC
	TII	TSC
		USS
1N759	△TII	191-206
	APD	APX
	ASC	BNT
	CNS	CODI
	♦CRL	♦DIC
	♦ETC	♦FSC
	GSE	HSC
	IDC	INRB
	INRC	INRI
	INRJ	ITT
	MOTA	MSC
	♦NPC	SAR
	SDI	SEN
	SES	SLCB
	SOD	SOIF
	TEC	TEK
	TIID	TIIF
	TNC	TRW
	TSC	UNI
	USS	WSI
1N759A	△TII	191-207
cont next col.		

TYPE No.	MFRS	Pg&Line
1N759A		
(cont)		
	APD	
	APX	ASC
	BNT	CNS
	CODI	♦CRL
	♦DIC	♦ETC
	♦FSC	GSE
	HSC	IDC
	INRB	INRC
	INRI	INRJ
	ITT	MOTA
	MSC	♦MULB
	♦NPC	♦PHIC
	♦RADF	SAR
	SDI	SEN
	SES	SLCB
	SOD	SOIF
	TEC	TEK
	TNC	TRW
	TSC	UNI
	USS	WSI
JAN1N759A	CODI	192-1
	CRL	DIC
	FSC	INRC
	MOTA	SOD
	TEC	TII
	TSC	USS
1N760	CNS	273-72
	IDC	ITT
	SEN	SES
		TEK
1N761	△TEC	171-54
	CNS	CODI
	CRL	♦DIC
	GSE	IDC
	INRB	INRC
	INRI	INRJ
	MOTA	SEN
	SOD	SSI
	TEK	TII
	TNC	TRW
	TSC	USS
		WSI
1N761-1	♦DIC	170-25
	GSE	IDC
	SEN	TEC
1N761-2	♦DIC	171-64
	GSE	IDC
	SEN	TEC
1N761A	CNS	171-55
	CODI	♦DIC
	GSE	IDC
	INRB	INRC
	INRI	INRJ
	MOTA	SEN
	SOD	TEC
	TEK	TNC
	TRW	TSC
	USS	WSI
1N762	△TEC	173-167
	CNS	CODI
	CRL	♦DIC
	GSE	IDC
	INRB	INRC
	INRI	INRJ
	MOTA	MSC
	SAR	SEN
	SOD	SSI
	TEK	TII
	TNC	TRW
	TSC	USS
		WSI
1N762-1	♦DIC	172-75
	GSE	IDC
	SEN	TEC
1N762-2	♦DIC	173-191
	GSE	IDC
	SEN	TEC
1N762A	CNS	173-168
	CODI	♦DIC
	GSE	IDC
	INRB	INRC
	INRI	INRJ
	MOTA	MSC
	SAR	SEN
	SOD	TEC
	TEK	TNC
	TRW	TSC
	USS	WSI
1N763	△TEC	179-3
	CNS	CODI
	CRL	♦DIC
	GSE	IDC
	INRB	INRC
	INRI	INRJ
	KSC	MOTA
	MSC	SAR
	SDI	SEN
	SOD	SSI
	TEK	TII
	TNC	TRW
	TSC	USS
		WSI
1N763-1	APD	176-119
	♦DIC	GSE
	IDC	SEN
		TEC
1N763-2	APD	178-169
	♦DIC	GSE
	IDC	SEN
		TEC
1N763-3	APD	179-44
	♦DIC	GSE
cont next col		

TYPE No.	MFRS	Pg&Line
1N763-3		
(cont)		
	IDC	
	SEN	TEC
1N763A	CNS	179-4
	CODI	♦DIC
	GSE	IDC
	INRB	INRC
	INRI	INRJ
	KSC	MOTA
	MSC	SAR
	SDI	SEN
	SOD	TEC
	TEK	TNC
	TRW	TSC
	USS	WSI
1N764	△TEC	184-68
	APD	CNS
	CODI	CRL
	♦DIC	GSE
	IDC	INRB
	INRC	INRI
	INRJ	ITT
	MOTA	MSC
	SAR	SDI
	SEN	SOD
	SSI	TEK
	TII	TNC
	TRW	TSC
	USS	WSI
1N764-1	APD	181-49
	♦DIC	GSE
	IDC	SEN
		TEC
1N764-2	APD	183-175
	♦DIC	GSE
	IDC	SEN
		TEC
1N764-3	APD	184-104
	♦DIC	GSE
	IDC	SEN
		TEC
1N764-4	APD	187-37
	♦DIC	GSE
	IDC	SEN
		TEC
1N764A	CNS	184-69
	CODI	♦DIC
	GSE	IDC
	INRB	INRC
	INRI	INRJ
	ITT	MOTA
	MSC	SAR
	SDI	SEN
	SOD	TEC
	TEK	TNC
	TRW	TSC
	USS	WSI
1N765	△TEC	187-89
	APD	CNS
	CODI	CRL
	♦DIC	GSE
	IDC	INRB
	INRC	INRI
	INRJ	ITT
	MOTA	MSC
	SAR	SDI
	SEN	SOD
	SSI	TEK
	TII	TNC
	TRW	TSC
	USS	WSI
1N765-1	APD	187-90
	♦DIC	GSE
	IDC	SEN
		TEC
1N765-2	APD	189-136
	♦DIC	GSE
	IDC	SEN
		TEC
1N765A	CNS	187-91
	CODI	♦DIC
	GSE	IDC
	INRB	INRC
	INRI	INRJ
	ITT	MOTA
	MSC	SAR
	SDI	SEN
	SOD	TEC
	TEK	TNC
	TRW	TSC
	USS	WSI
1N766	△TEC	194-10
	APD	CNS
	CODI	CRL
	♦DIC	GSE
	IDC	INRB
	INRC	INRI
	INRJ	ITT
	MOTA	MSC
	SAR	SDI
	SEN	SOD
	SSI	TEK
	TII	TNC
	TRW	TSC
	USS	WSI
1N766-1	APD	191-173
	♦DIC	GSE
	IDC	SEN
		TEC
1N766-2	APD	194-71
	♦DIC	GSE
	IDC	SEN
		TEC

△-Registered with JEDEC by this manufacturer

♦-Copy of mfr's data sheet may be ordered from D.A.T.A.

1. TYPE No. CROSS INDEX

IN TYPE NUMBER SEQUENCE

TYPE No	MFRS	Pg&Line
1N766-3	APD	196 - 20
	♦DIC	
	GSE	
	IDC	
	SEN	
	TEC	
1N766A	CNS	194 - 11
	CODI	♦DIC
	GSE	IDC
	INRB	INRC
	INRI	INRJ
	ITT	MOTA
	MSC	SAR
	SDI	SEN
	SOD	TEC
	TEK	TNC
	TRW	TSC
	USS	WSI
1N767	APD	△TEC 199 - 3
	CODI	CNS
	♦DIC	♦CRL
	IDC	GSE
	INRC	INRB
	INRJ	INRI
	MOTA	ITT
	♦SAR	MSC
	SEN	SDI
	SSI	SOD
	TNC	TEK
	TSC	TRW
		USS
		WSI
1N767-1	APD	197 - 12
	♦DIC	GSE
	IDC	SEN
		TEC
1N767-2	APD	199 - 22
	♦DIC	GSE
	IDC	SEN
		TEC
1N767-3	APD	200-167
	♦DIC	GSE
	IDC	SEN
		TEC
1N767A	CNS	199 - 4
	CODI	♦DIC
	GSE	IDC
	INRB	INRC
	INRI	INRJ
	ITT	MOTA
	MSC	♦SAR
	SDI	SEN
	SOD	SSI
	TEC	TEK
	TNC	TRW
	TSC	USS
		WSI
1N768	APD	△TEC 203-107
	CODI	CNS
	♦DIC	♦CRL
	IDC	GSE
	INRC	INRB
	INRJ	INRI
	MOTA	ITT
	♦SAR	MSC
	SEN	SDI
	TEK	SOD
	TRW	TNC
		TSC
		USS
1N768-1	APD	201 - 95
	♦DIC	GSE
	IDC	SEN
		TEC
1N768-2	APD	203-108
	♦DIC	GSE
	IDC	SEN
		TEC
1N768-3	APD	204 - 77
	♦DIC	GSE
	IDC	SEN
		TEC
1N768A	CNS	203-109
	CODI	♦DIC
	GSE	IDC
	INRB	INRC
	INRI	INRJ
	ITT	MOTA
	MSC	♦SAR
	SDI	SEN
	SOD	TEC
	TEK	TNC
	TRW	TSC
		USS
1N769	APD	△TEC 208 - 32
	CODI	CNS
	♦DIC	♦CRL
	IDC	GSE
	INRC	INRB
	INRJ	INRI
	MOTA	ITT
	♦SAR	MSC
	SEN	SDI
	TEK	SOD
	TSC	TNC
		USS
1N769-1	APD	206 - 44
	♦DIC	GSE
	IDC	SEN
		TEC
1N769-2	APD	208 - 48
	♦DIC	GSE
	IDC	SEN
		TEC
1N769-3	APD	210 - 84
cont next col		

TYPE No	MFRS	Pg&Line
1N769-3		
(cont.)	♦DIC	
	GSE	IDC
	SEN	TEC
1N769-4	♦DIC	212 - 87
	GSE	IDC
	SEN	TEC
1N769A	CNS	208 - 33
	CODI	♦DIC
	GSE	IDC
	INRB	INRC
	INRI	INRJ
	ITT	MOTA
	MSC	♦SAR
	SDI	SEN
	SOD	TEC
	TEK	TNC
	TSC	USS
1N770		CNS 266 - 7
	EMLS	GELC
	GIC	IDC
	ITT	SDI
	SES	TEC
1N771		△GIC 253 - 51
	CNS	GELC
	IDC	ITT
	SES	SOD
		TEC
1N771A		△GIC 253 - 52
	GELC	IDC
	ITT	SES
	SOD	TEC
1N771B		△GIC 253 - 55
	GELC	IDC
	ITT	SES
	SOD	TEC
1N772		△GIC 252 - 95
	CNS	GELC
	IDC	ITT
	SES	SOD
	TEC	UPI
1N772A		△GIC 252-110
	GELC	IDC
	ITT	SES
	SOD	TEC
		UPI
1N773		△GIC 252 - 49
	CNS	GELC
	IDC	ITT
	SES	SOD
	TEC	UPI
1N773A		△GIC 252 - 51
	GELC	IDC
	ITT	SES
	SOD	TEC
		UPI
1N774		△GIC 252 - 9
	CNS	GELC
	IDC	ITT
	SES	SOD
	TEC	UPI
1N774A		△GIC 251 - 36
	GELC	IDC
	ITT	SES
	SOD	TEC
		UPI
1N775		△GIC 252 - 10
	CNS	GELC
	IDC	ITT
	SES	SOD
	TEC	UPI
1N776		△GIC 247 - 24
	CNS	GELC
	IDC	ITT
	SES	SOD
	TEC	UPI
1N777		△GIC 276 - 10
	CNS	GELC
	IDC	ITT
	SES	SOD
		TEC
1N778		CNS 279 - 48
	CODI	FSC
	HSC	ITT
	RAYN	SDI
	SES	TSC
		WSI
1N779		CNS 281 - 62
	CODI	FSC
	HSC	ITT
	RAYN	SDI
	SES	SGSI
	TSC	WSI
1N781		△TEC 269 - 78
	CNS	GELC
	ITT	SOD
1N781A		△TEC 269 - 79
	GELC	ITT
	SES	SOD
1N788		CNS 273 - 73
	IDC	ITT
		SES
1N789		△TRW 266-109
	AMD	CNS
	CODI	FSC
	HSC	IDC
	ITT	NECJ
	NJRC	RAYN
	SDI	SES
	SGSI	TSC
		WSI
1N789M		IDC 267-108
		MSC

TYPE No.	MFRS	Pg&Line
1N790	△TRW	267 - 98
	AMD	CNS
	CODI	FSC
	HSC	IDC
	ITT	RAYN
	SDI	SES
	TSC	WSI
1N790M		IDC 267 - 99
		MSC
1N791	△TRW	266-110
	AMD	CNS
	CODI	FSC
	HSC	IDC
	ITT	NJRC
	RAYN	SDI
	SES	SGSI
	TSC	WSI
1N791M		IDC 267-109
		MSC
1N792	△TRW	267 - 1
	AMD	CNS
	CODI	FSC
	HSC	IDC
	ITT	NJRC
	RAYN	SDI
	SES	TSC
		WSI
1N792M		IDC 267-110
		MSC
1N793	△TRW	273-102
	AMD	CNS
	CODI	FSC
	HSC	ITT
	RAYN	SDI
	SES	TSC
		WSI
1N793M		MSC 273-103
1N794	△TRW	273 - 75
	AMD	CNS
	CODI	FSC
	HSC	IDC
	ITT	RAYN
	SDI	SES
	TSC	WSI
1N795	△TRW	273-104
	AMD	CNS
	CODI	FSC
	ITT	RAYN
	SDI	SES
	TSC	WSI
1N796	△TRW	273-105
	AMD	CNS
	CODI	FSC
	ITT	RAYN
	SDI	SES
	TSC	WSI
1N797	△TRW	280 - 59
	AMD	CNS
	CODI	ERI
	FSC	HSC
	ITT	RAYN
	SDI	SES
	TSC	WSI
1N798	△TRW	280 - 43
	AMD	CNS
	CODI	HSC
	ITT	RAYN
	SDI	SES
	TSC	WSI
1N799	△TRW	280 - 60
	AMD	CNS
	CODI	FSC
	HSC	ITT
	RAYN	SDI
	SES	TSC
		WSI
1N800	△TRW	280 - 61
	AMD	CNS
	CODI	HSC
	ITT	RAYN
	SDI	SES
	TSC	WSI
1N801	△TRW	281 - 37
	AMD	CNS
	CODI	FSC
	HSC	ITT
	RAYN	SDI
	SES	TSC
		WSI
1N802	△TRW	281 - 38
	AMD	CNS
	CODI	HSC
	ITT	RAYN
	SDI	SES
	TSC	WSI
1N803	△TRW	283 - 23
	AMD	CNS
	CODI	HSC
	ITT	RAYN
	SDI	SES
	TSC	WSI
1N804	△TRW	283 - 24
	AMD	CNS
	CODI	FSC
	HSC	ITT
	RAYN	SDI
	SES	TSC
		WSI
1N805		CNS 248-109
	GELC	GIC
	HSC	ITT
	SDI	SES
	TEC	UPI

TYPE No.	MFRS	Pg&Line
1N806	△TEC	279 - 49
	AMD	CNS
	CODI	EMLS
	FSC	HSC
	IDC	ITT
	RAYN	SDI
	SES	TSC
		WSI
1N807	△TEC	282-109
	AMD	CNS
	CODI	FSC
	HSC	IDC
	ITT	RAYN
	SDI	SES
	TSC	WSI
1N808	AMD	279 - 50
	CNS	CODI
	FSC	HSC
	IDC	ITT
	RAYN	SDI
	SES	TSC
		WSI
1N809	AMD	282-110
	CNS	CODI
	EMLS	FSC
	HSC	IDC
	ITT	RAYN
	SDI	SES
	SGSI	WSI
1N810	AMD	271 - 96
	CNS	CODI
	HSC	IDC
	ITT	SDI
	SES	SOD
1N811	△TEC	265-107
	AMD	BNT
	CNS	CODI
	FSC	GIC
	HSC	IDC
	ITT	RAYN
	SDI	SES
	SOD	TSC
		WSI
1N811M		IDC 267-100
		MSC
1N812	△TEC	267-101
	AMD	BNT
	CNS	CODI
	FSC	GIC
	HSC	IDC
	ITT	RAYN
	SDI	SES
	SOD	TSC
		WSI
1N813M		IDC 265-108
		MSC
1N814	△TEC	269 - 70
	AMD	BNT
	CNS	CODI
	FSC	GIC
	HSC	IDC
	ITT	RAYN
	SDI	SES
	SOD	TSC
		WSI
1N814M		IDC 272 - 65
		MSC
1N815	△TEC	265 - 25
	AMD	BNT
	CNS	CODI
	FSC	GIC
	HSC	IDC
	ITT	RAYN
	SDI	SES
	SOD	WSI
1N815M		IDC 266 - 1
		MSC
1N816	△TEC	173-184
	APD	BNT
	CNS	CODI
	EAS	FSC
	GIC	IDC
	ITT	SDI
	SES	SOD
	TRW	TSC
		UPI
JAN1N816		ITT 165 - 17
		TEC
1N817		CNS 283 - 35
	HSC	SDI
1N818		CNS 274 - 55
	CODI	ERI
	FSC	GIC
	HSC	IDC
	ITT	RAYN
	SDI	SES
	SOD	TSC
		WSI
1N818M		MSC 276 - 53
1N821	♦△TEC	174 - 83
	CNS	CODI
	♦CRL	♦DIC
cont next col		

TYPE No.	MFRS	Pg&Line
1N821		
(cont.)	GSE	
	IDC	INRB
	INRC	INRI
	INRJ	KSC
	♦MOTA	♦MSC
	SDI	SEN
	SOIF	SSI
	TNC	TSC
	♦USS	WSI
JAN1N821	CODI	174 - 84
	CRL	DIC
	GSE	INRC
	KSC	MOTA
	MSC	TEC
	TRW	TSC
		USS
1N821A	♦△MOTA	174-144
	CODI	♦CRL
	♦DIC	GSE
	IDC	INRB
	INRC	INRI
	INRJ	KSC
	♦MSC	SDI
	SEN	SOIF
	SSI	♦TEC
	TNC	TSC
	♦USS	WSI
1N822	♦△TEC	174 - 85
	CNS	CODI
	♦CRL	♦DIC
	GSE	IDC
	SEN	SSI
	TNC	♦USS
		WSI
1N822A		IDC 174 - 86
		SSI
1N823	♦△TEC	174 - 87
	CNS	CODI
	♦CRL	♦DIC
	GSE	IDC
	INRB	INRC
	INRI	INRJ
	KSC	♦MOTA
	♦MSC	SDI
	SEN	♦SLCB
	SOIF	SSI
	TNC	♦USS
		WSI
JAN1N823	CODI	174 - 88
	CRL	DIC
	GSE	INRC
	KSC	MOTA
	MSC	TEC
	TRW	TSC
		USS
1N823A	♦△MOTA	174-145
	CODI	♦CRL
	♦DIC	GSE
	IDC	INRB
	INRC	INRI
	INRJ	KSC
	♦MSC	SDI
	SEN	SOIF
	SSI	♦TEC
	TNC	TSC
	♦USS	WSI
1N824	♦△TEC	174 - 89
	CNS	CODI
	♦CRL	♦DIC
	GSE	IDC
	SEN	SSI
	TNC	♦USS
		WSI
1N824A		IDC 174 - 90
		SSI
1N825	♦△TEC	174 - 91
	CNS	CODI
	♦CRL	♦DIC
	GSE	IDC
	INRB	INRC
	INRI	INRJ
	KSC	♦MOTA
	♦MSC	SDI
	SEN	♦SLCB
	SOIF	SSI
	TNC	TSC
	♦USS	WSI
JAN1N825	CODI	174 - 92
	CRL	DIC
	GSE	INRC
	KSC	MOTA
	MSC	TEC
	TRW	TSC
		USS
1N825A	♦△MOTA	174-146
	CODI	♦CRL
	♦DIC	GSE
	IDC	INRB
	INRC	INRI
	INRJ	KSC
	♦MSC	SDI
	SEN	SOIF
	SSI	♦TEC
	TNC	TSC
	♦USS	WSI
1N826	CNS	176-151
	CODI	CRL
	♦DIC	GSE
	IDC	INRB
	INRC	INRI
	INRJ	SEN
	SSI	TNC
	TSC	♦USS

△-Registered with JEDEC by this manufacturer

♦-Copy of mfr's data sheet may be ordered from D.A.T.A.

1. TYPE No. CROSS INDEX

IN TYPE NUMBER SEQUENCE

TYPE No.	MFRS	Pg&Line
1N826A	IDC	176-152
	SSI	
1N827	♦△TEC	174- 93
CNS	CODI	
♦CRL	♦DIC	
GSE	IDC	
INRB	INRC	
INRI	INRJ	
KSC	♦MOTA	
♦MSC	SDI	
SEN	♦SLCB	
SOIF	SSI	
TNC	TSC	
♦USS	WSI	
JAN1N827	CODI	174- 94
CRL	DIC	
GSE	INRC	
KSC	MOTA	
MSC	TEC	
TRW	TSC	
	USS	
1N827A	♦△MOTA	174-147
CODI	♦CRL	
♦DIC	GSE	
IDC	INRB	
INRC	INRI	
INRJ	KSC	
♦MSC	SDI	
SEN	SOIF	
SSI	♦TEC	
TNC	TSC	
♦USS	WSI	
1N828	CNS	176-153
CODI	CRL	
♦DIC	GSE	
IDC	INRB	
INRC	INRI	
INRJ	SEN	
SSI	TSC	
	♦USS	
1N828A	IDC	176-154
	SSI	
1N829	♦△TEC	174- 95
CNS	CODI	
♦CRL	♦DIC	
GSE	IDC	
INRB	INRC	
INRI	INRJ	
KSC	♦MOTA	
♦MSC	SDI	
SEN	♦SLCB	
SOIF	SSI	
TNC	TSC	
	♦USS	
JAN1N829	CODI	174- 96
DIC	GSE	
INRC	KSC	
MOTA	MSC	
TEC	TRW	
TSC	USS	
1N829A	CODI	174- 97
♦CRL	DIC	
GSE	IDC	
INRB	INRC	
INRI	INRJ	
KSC	♦MOTA	
♦MSC	SDI	
SEN	SOIF	
SSI	TNC	
	♦USS	
1N830	♦△ALP	598- 13
CNS	KEM	
	MIC	
1N830A	♦ALP	592- 43
GIC	KEM	
	MIC	
JAN1N830A	ALP	592- 44
GIC	MIC	
1N831	♦△ALP	510- 75
CNS	KEM	
	MIC	
1N831A	♦△ALP	510- 76
KEM	MIC	
JAN1N831A	ALP	510- 77
1N831B	♦△ALP	510- 78
	MIC	
1N831C	ALP	510- 79
	MIC	
1N832	♦△ALP	512- 48
CNS	KEM	
	MIC	
1N832A	△MIC	512- 49
♦ALP	KEM	
1N832B	♦ALP	512- 50
	MIC	
JAN1N832B	ALP	512- 51
1N832C	♦△ALP	510- 1
	MIC	
1N832D	△ALP	512- 52
1N833	♦△ALP	517- 76
CNS	KEM	
	MIC	
1N833A	△MIC	517- 77
	♦ALP	
1N835	CNS	268- 1
EMLS	GELC	
IDC	ITT	
	SES	
1N837	AMD	279- 85
CNS	CODI	
FSC	HSC	
ITT	RAYN	
SES	SGSI	
SOD	TSC	

TYPE No.	MFRS	Pg&Line
1N837A	AMD	279- 51
CODI	FSC	
HSC	ITT	
SDI	SES	
SGSI	SOD	
	TSC	
1N838	AMD	281- 39
CNS	CODI	
FSC	HSC	
ITT	RAYN	
SDI	SES	
TSC	WSI	
1N839	AMD	283- 25
CNS	CODI	
FSC	HSC	
ITT	RAYN	
SDI	SES	
SGSI	WSI	
1N840	AMD	269- 72
CNS	CODI	
FSC	HSC	
IDC	ITT	
RAYN	SDI	
SES	SGSI	
SOD	TSC	
	WSI	
1N840M	IDC	272- 79
1N841	AMD	280- 50
CNS	CODI	
FSC	HSC	
ITT	RAYN	
SDI	SES	
SGSI	TSC	
	WSI	
1N842	AMD	281- 53
CNS	FSC	
HSC	ITT	
RAYN	SDI	
SES	WSI	
1N843	AMD	283- 1
CNS	FSC	
HSC	NJRC	
RAYN	SDI	
SGSI	WSI	
1N844	AMD	279- 86
CNS	CODI	
FSC	HSC	
ITT	RAYN	
SDI	SES	
	WSI	
1N845	AMD	283- 26
CNS	CODI	
FSC	HSC	
ITT	RAYN	
SDI	SES	
SGSI	WSI	
1N846	CNS	292- 91
CODI	GIC	
IDC	SOIF	
TEC	TSC	
UPI	WSI	
1N847	CNS	299- 4
GIC	IDC	
SOIF	TEC	
TSC	UPI	
	WSI	
1N848	CNS	309- 74
GIC	TEC	
TSC	UPI	
	WSI	
1N849	CNS	320- 35
CODI	GIC	
TEC	TSC	
UPI	WSI	
1N850	CNS	328- 28
CODI	GIC	
SSI	TEC	
UPI	WSI	
1N851	CNS	338-109
CODI	GIC	
IDC	SSI	
TEC	WSI	
1N852	CNS	345- 93
CODI	GIC	
TEC	WSI	
1N853	CNS	355- 5
CODI	GIC	
TEC	WSI	
1N854	CNS	359- 10
GIC	IDC	
TEC	WSI	
1N855	CNS	366-105
GIC	IDC	
TEC	WSI	
1N856	CNS	369- 55
GIC	TEC	
	WSI	
1N857	CNS	292- 85
GIC	IDC	
TEC	TSC	
UPI	WSI	
1N858	CNS	298-103
GIC	IDC	
TEC	TSC	
UPI	WSI	
1N859	CNS	309- 67
CODI	GIC	
IDC	TEC	
TSC	UPI	
	WSI	
1N860	CNS	320- 30
GIC	TEC	
TSC	UPI	
	WSI	

TYPE No.	MFRS	Pg&Line
1N861	CNS	328- 22
CODI	GIC	
IDC	TEC	
UPI	WSI	
1N862	CNS	338-103
CODI	GIC	
TEC	WSI	
1N863	CNS	345- 85
CODI	GIC	
TEC	WSI	
1N864	CNS	355- 4
CODI	GIC	
TEC	WSI	
1N865	CNS	359- 2
CODI	GIC	
TEC	WSI	
1N866	CNS	366-104
CODI	GIC	
IDC	TEC	
	WSI	
1N867	CNS	369- 44
CODI	GIC	
TEC	WSI	
1N868	CNS	292- 79
CODI	GIC	
IDC	SOIF	
TEC	TSC	
UPI	WSI	
1N869	CNS	298- 97
CODI	GIC	
IDC	SOIF	
TEC	TSC	
UPI	WSI	
1N870	CNS	309- 57
CODI	GIC	
IDC	TEC	
TSC	UPI	
	WSI	
1N871	CNS	320- 26
CODI	GIC	
IDC	TSC	
UPI	WSI	
1N872	CNS	328- 15
CODI	GIC	
TEC	UPI	
	WSI	
1N873	CNS	338- 98
CODI	GIC	
IDC	TEC	
	WSI	
1N874	CNS	345- 76
CODI	GIC	
TEC	WSI	
1N875	CNS	355- 2
CODI	GIC	
IDC	TEC	
	WSI	
1N876	CNS	358-106
CODI	GIC	
TEC	WSI	
1N877	CNS	366-102
CODI	GIC	
TEC	WSI	
1N878	CNS	369- 32
CODI	GIC	
TEC	WSI	
1N879	CNS	292- 77
CODI	GIC	
SOD	TEC	
TSC	UPI	
	WSI	
1N880	CNS	298- 95
CODI	GIC	
IDC	TEC	
TSC	UPI	
	WSI	
1N881	CNS	309- 55
CODI	GIC	
SDI	TEC	
TSC	WSI	
1N882	CNS	320- 21
CODI	GIC	
TEC	TSC	
UPI	WSI	
1N883	CNS	328- 11
CODI	GIC	
TEC	WSI	
1N884	CNS	338- 93
CODI	GIC	
IDC	TEC	
	WSI	
1N885	CNS	345- 72
CODI	GIC	
IDC	WSI	
1N886	CNS	355- 1
CODI	GIC	
IDC	TEC	
1N887	CNS	358-104
CODI	GIC	
	TEC	
1N888	CNS	366-101
CODI	GIC	
	TEC	
1N889	CNS	369- 25
CODI	GIC	
	TEC	
1N890	APD	251- 15
CNS	CODI	
FSC	GIC	
INRB	INRC	
INRI	INRJ	
ITT	SES	
	WSI	

TYPE No.	MFRS	Pg&Line
1N891	△GIC	273- 85
CNS	CODI	
FSC	HSC	
IDC	ITT	
RAYN	SDI	
SES	SOD	
TEC	TSC	
	WSI	
1N892	CNS	279- 52
CODI	HSC	
IDC	ITT	
RAYN	SDI	
SES	TSC	
	WSI	
1N893	CNS	283- 86
CODI	HSC	
IDC	RAYN	
SDI	WSI	
1N897	CNS	249- 97
CODI	♦MSC	
	UPI	
1N898	CNS	250- 27
CODI	♦MSC	
	UPI	
1N899	CNS	253- 84
CODI	♦MSC	
1N900	CNS	253-100
CODI	♦MSC	
1N901	CNS	253-109
CODI	IDC	
	♦MSC	
1N902	CNS	256-104
CODI	♦MSC	
1N903	BNT	265- 70
CNS	CODI	
EMLS	FSC	
GESY	GIC	
HSC	IDC	
ITT	NJRC	
QUA	RAYN	
SDI	SES	
SGSI	SOD	
TEC	TSC	
	WSI	
1N903A	△FSC	270- 59
BNT	CODI	
GESY	GIC	
HSC	IDC	
ITT	NJRC	
QUA	SDI	
SES	SOD	
TEC	TSC	
	WSI	
1N903AM	IDC	270- 60
1N903M	IDC	270- 61
1N904	BNT	267- 36
CNS	CODI	
EMLS	FSC	
GESY	GIC	
HSC	IDC	
ITT	NJRC	
QUA	RAYN	
SDI	SES	
SGSI	SOD	
TEC	TSC	
	WSI	
1N904A	△FSC	268-107
BNT	CODI	
GIC	HSC	
IDC	ITT	
NJRC	QUA	
SDI	SES	
SGSI	SOD	
TEC	TSC	
	WSI	
1N904AM	IDC	268-108
1N904M	IDC	268-109
1N905	BNT	268-110
CNS	CODI	
EMLS	FSC	
GIC	HSC	
IDC	ITT	
NJRC	QUA	
RAYN	SDI	
SES	SGSI	
SOD	TEC	
TSC	WSI	
1N905A	△FSC	267- 37
BNT	CODI	
GIC	HSC	
IDC	ITT	
NJRC	QUA	
SDI	SES	
SGSI	SOD	
TEC	TSC	
	WSI	
1N905AM	IDC	267- 38
1N905M	IDC	267- 39
1N906	BNT	265- 71
CNS	CODI	
EMLS	FSC	
GIC	HSC	
IDC	ITT	
NJRC	QUA	
RAYN	SDI	
SES	SOD	
TEC	TSC	
	WSI	
1N906A	△FSC	267- 40
BNT	CODI	
GIC	HSC	
IDC	ITT	
NJRC	QUA	
cont.next col		

TYPE No.	MFRS	Pg&Line
1N906A		
(cont)	SDI	
SES	SOD	
TEC	TSC	
	WSI	
1N906AM	IDC	267- 41
1N906M	IDC	267- 42
1N907	BNT	267- 43
CNS	CODI	
EMLS	FSC	
GIC	HSC	
IDC	ITT	
NJRC	QUA	
RAYN	SDI	
SES	SOD	
TEC	TSC	
	WSI	
1N907A	△FSC	269- 1
BNT	CODI	
GIC	HSC	
IDC	ITT	
NJRC	QUA	
SDI	SES	
SOD	TEC	
TSC	WSI	
1N907AM	IDC	269- 2
1N907M	IDC	269- 3
1N908	BNT	269- 4
CNS	CODI	
EMLS	FSC	
GIC	HSC	
IDC	ITT	
NJRC	QUA	
RAYN	SDI	
SES	SOD	
TEC	TSC	
	WSI	
1N908A	△FSC	270- 62
BNT	CODI	
GIC	HSC	
IDC	ITT	
NJRC	QUA	
SDI	SES	
SOD	TEC	
TSC	WSI	
1N908AM	IDC	270- 63
1N908M	IDC	270- 64
1N909	△GIC	251- 24
BNT	CNS	
GELC	IDC	
ITT	SES	
	UPI	
1N910	△GIC	249- 18
BNT	CNS	
GELC	ITT	
SES	UPI	
1N911	△GIC	248- 26
BNT	CNS	
GELC	GESY	
IDC	ITT	
SES	TEC	
	UPI	
1N912,A	BNT	165- 14
CNS	CODI	
IDC	TSC	
1N913,A	BNT	165- 15
CNS	CODI	
IDC	TSC	
1N914	♦△TII	277- 47
AEIL	AMD	
APX	♦BNT	
CNS	CODI	
♦ESMF	FSC	
GESY	GIC	
HSC	IDC	
INTG	ITT	
MISI	♦MULB	
NECJ	NJRC	
♦NPC	♦PHIC	
QUA	RADF	
RAYN	SDI	
SES	SGSI	
SOD	TEC	
TIIB	TIID	
TIIF	TSC	
UPI	♦VALG	
JAN1N914	FSC	277- 98
GIC	ITT	
RAYN	TEC	
TII	TSC	
1N914A	△FSC	275- 13
AMD	APX	
BNT	CODI	
♦ESMF	GESY	
GIC	HSC	
IDC	INTG	
ITT	♦MISI	
♦MULB	NJRC	
♦NPC	♦PHIC	
QUA	RADF	
RAYN	SDI	
SES	SGSI	
TEC	♦TII	
TIID	TIIF	
TSC	UPI	
♦VALG	WSI	
1N914B	△TII	275- 14
APX	BNT	
CODI	♦ESMF	
FSC	GESY	
GIC	HSC	
IDC	INTG	
ITT	MISI	
cont.next page		

△-Registered with JEDEC by this manufacturer

♦-Copy of mfr's data sheet may be ordered from D.A.T.A.

1. TYPE No. CROSS INDEX

IN TYPE NUMBER SEQUENCE

TYPE No.	MFRS	Pg&Line
1N914B		
(cont.)	♦MULB	
NJRC	♦NPC	
♦PHIC	QUA	
RADF	SDI	
SES	SGSI	
TEC	TIID	
TIIF	TSC	
UPI	♦VALG	
1N914M	CODI	275 - 15
	IDC	
1N915	♦△TII	271 - 53
BNT	CNS	
CODI	IDC	
♦SES	SOD	
TIIB	TIID	
	♦TIIF	
1N916	♦△TII	277 - 48
AEIL	AMD	
APX	BNT	
CNS	CODI	
♦ESMF	FSC	
GESY	GIC	
HSC	IDC	
ITT	MISI	
♦MULB	NJRC	
♦NPC	♦PHIC	
QUA	RADF	
RAYN	SDI	
SES	SGSI	
SOD	TEC	
TIIB	TIID	
TIIF	TSC	
♦VALG	WSI	
1N916A	△FSC	275 - 16
AMD	APX	
BNT	CODI	
♦ESMF	GESY	
GIC	HSC	
IDC	ITT	
MISI	♦MULB	
NJRC	♦NPC	
♦PHIC	QUA	
RADF	RAYN	
SDI	SES	
SGSI	SOD	
TEC	♦TII	
TIID	TIIF	
TSC	♦VALG	
1N916B	△GESY	275 - 17
APX	BNT	
CODI	♦ESMF	
FSC	GIC	
HSC	IDC	
ITT	MISI	
♦MULB	NJRC	
NPC	♦PHIC	
QUA	RADF	
SDI	SES	
SGSI	SOD	
TEC	♦TII	
TIID	TIIF	
	♦VALG	
1N917	♦△TII	267 - 35
CNS	CODI	
IDC	♦SES	
SOD	TIIB	
TIID	♦TIIF	
1N918	CNS	515 - 55
1N919	CNS	281 - 31
SSI	TEC	
	TSC	
1N920	AMD	268 - 87
CNS	HSC	
IDC	ITT	
RAYN	SDI	
SES	SSI	
TSC	WSI	
1N921	AMD	276 - 47
CNS	HSC	
IDC	ITT	
NJRC	RAYN	
SDI	SES	
SSI	TSC	
	WSI	
1N922	AMD	279 - 53
CNS	HSC	
IDC	ITT	
NJRC	RAYN	
SDI	SES	
SSI	TSC	
	WSI	
1N923	AMD	280 - 89
CNS	HSC	
IDC	ITT	
NJRC	RAYN	
SDI	SES	
SSI	WSI	
1N924	CNS	274 - 6
IDC	ITT	
	SES	
1N925	AMD	269 - 60
CNS	FSC	
GIC	HSC	
IDC	ITT	
NJRC	RAYN	
SDI	SES	
TEC	WSI	
1N926	AMD	269 - 61
CNS	FSC	
GIC	HSC	
IDC	ITT	
NJRC	RAYN	
cont next col		

TYPE No.	MFRS	Pg&Line
1N926		
(cont.)	SDI	
SES	TEC	
	WSI	
1N927	AMD	274 - 24
CNS	FSC	
GIC	HSC	
IDC	ITT	
NJRC	RAYN	
SDI	SES	
SGSI	TEC	
	WSI	
1N928	AMD	280 - 40
CNS	FSC	
HSC	ITT	
NJRC	RAYN	
SDI	SES	
TEC	WSI	
1N929	△GIC	247 - 40
CNS	CODI	
ETC	HSC	
IDC	ITT	
SDI	SES	
SOD	UPI	
1N930	△GIC	250 - 87
CNS	CODI	
ETC	HSC	
IDC	ITT	
SDI	SES	
SOD	UPI	
1N931	△GIC	254 - 64
CNS	CODI	
ETC	HSC	
IDC	ITT	
SDI	SES	
1N932	△GIC	257-110
CNS	CODI	
ETC	IDC	
1N933	△TEC	279 - 78
BNT	CNS	
IDC	ITT	
SDI	SES	
SOD	SSI	
JAN1N933	none	279 - 79
1N934	AMD	274 - 58
CNS	CODI	
HSC	IDC	
ITT	NJRC	
RAYN	SDI	
	SES	
1N935	♦△MOTA	184-152
AMD	BNT	
CNS	CODI	
♦CRL	♦DIC	
GSE	IDC	
INRB	INRC	
INRI	INRJ	
♦MSC	SDI	
SEN	♦SLCB	
SOIF	TEC	
TNC	USS	
1N935A	♦△MOTA	184-153
BNT	CODI	
♦CRL	♦DIC	
GSE	IDC	
INRB	INRC	
INRI	INRJ	
♦MSC	SDI	
SEN	♦SLCB	
SOIF	TEC	
TNC	TSC	
	USS	
1N935B	♦△MOTA	184-154
BNT	CODI	
♦CRL	♦DIC	
GSE	IDC	
INRB	INRC	
INRI	INRJ	
♦MSC	SDI	
SEN	♦SLCB	
SOIF	TEC	
TNC	USS	
1N936	♦△MOTA	184-156
AMD	BNT	
CNS	CODI	
♦CRL	♦DIC	
GSE	IDC	
INRB	INRC	
INRI	INRJ	
♦MSC	SDI	
SEN	♦SLCB	
SOIF	TEC	
TNC	USS	
1N936A	♦△MOTA	184-157
BNT	CODI	
♦CRL	♦DIC	
GSE	IDC	
INRB	INRC	
INRI	INRJ	
♦MSC	SDI	
SEN	♦SLCB	
SOIF	TEC	
TNC	TSC	
	USS	
1N936B	♦△MOTA	184-158
BNT	CODI	
♦CRL	♦DIC	
cont next col		

TYPE No.	MFRS	Pg&Line
1N936B		
(cont.)	GSE	
IDC	INRB	
INRC	INRI	
INRJ	♦MSC	
SDI	SEN	
♦SLCB	SOIF	
TEC	TNC	
TSC	USS	
1N937	♦△MOTA	184-159
AMD	BNT	
CNS	CODI	
♦CRL	♦DIC	
GSE	IDC	
INRB	INRC	
INRI	INRJ	
♦MSC	SDI	
SEN	♦SLCB	
SOIF	TEC	
TNC	USS	
1N937A	♦△MOTA	184-160
BNT	CODI	
♦CRL	♦DIC	
GSE	IDC	
INRB	INRC	
INRI	INRJ	
♦MSC	SDI	
SEN	♦SLCB	
SOIF	TEC	
TNC	TSC	
	USS	
1N937B	♦△MOTA	184-161
BNT	CODI	
♦CRL	♦DIC	
GSE	IDC	
INRB	INRC	
INRI	INRJ	
♦MSC	SDI	
SEN	♦SLCB	
SOIF	TEC	
TNC	TSC	
	USS	
JAN1N937B	CRL	184-162
DIC	GSE	
INRC	MOTA	
MSC	TEC	
TSC	USS	
1N938	♦△MOTA	184-163
AMD	BNT	
CNS	CODI	
♦CRL	♦DIC	
GSE	IDC	
INRB	INRC	
INRI	INRJ	
♦MSC	SDI	
SEN	♦SLCB	
SOIF	TEC	
TNC	TSC	
	USS	
1N938A	♦△MOTA	184-164
BNT	CODI	
♦CRL	♦DIC	
GSE	IDC	
INRB	INRC	
INRI	INRJ	
♦MSC	SDI	
SEN	♦SLCB	
SOIF	TEC	
TNC	TSC	
	USS	
1N938B	♦△MOTA	184-165
BNT	CODI	
♦CRL	♦DIC	
GSE	IDC	
INRB	INRC	
INRI	INRJ	
♦MSC	SDI	
SEN	♦SLCB	
SOIF	TEC	
TNC	TSC	
	USS	
JAN1N938B	DIC	184-166
GSE	INRC	
MOTA	MSC	
TEC	TSC	
	USS	
1N939	♦△MOTA	184-167
AMD	BNT	
CNS	CODI	
♦CRL	♦DIC	
GSE	IDC	
INRB	INRC	
INRI	INRJ	
♦MSC	SDI	
SEN	♦SLCB	
SOIF	TEC	
TNC	TSC	
	USS	
1N939A	♦△MOTA	184-168
BNT	CODI	
♦CRL	♦DIC	
GSE	IDC	
INRB	INRC	
INRI	INRJ	
♦MSC	SDI	
SEN	♦SLCB	
SOIF	TEC	
TNC	TSC	
	USS	
1N939B	♦△MOTA	184-169
BNT	CODI	
♦CRL	♦DIC	
GSE	IDC	
cont next col		

TYPE No.	MFRS	Pg&Line
1N939B		
(cont.)	INRB	
INRC	INRI	
INRJ	♦MSC	
SDI	SEN	
♦SLCB	SOIF	
TEC	TNC	
TSC	USS	
JAN1N939B	DIC	184-170
INRC	MOTA	
	USS	
1N940	♦△MOTA	184-171
AMD	BNT	
CNS	CODI	
CRL	♦DIC	
GSE	IDC	
MSC	SDI	
SEN	♦SLCB	
TEC	USS	
1N940A	♦△MOTA	184-172
BNT	CODI	
CRL	♦DIC	
GSE	IDC	
MSC	SDI	
SEN	♦SLCB	
TEC	USS	
1N940B	♦△MOTA	184-173
BNT	CODI	
CRL	♦DIC	
GSE	IDC	
MSC	SDI	
SEN	♦SLCB	
TEC	USS	
JAN1N940B	DIC	184-174
1N941	♦△MOTA	191-112
AMD	BNT	
CNS	CODI	
♦CRL	♦DIC	
GSE	IDC	
SDI	SEN	
SOIF	TEC	
TNC	USS	
	WSI	
1N941A	♦△MOTA	191-113
BNT	CODI	
♦CRL	♦DIC	
GSE	IDC	
SDI	SEN	
SOIF	TEC	
TNC	USS	
	WSI	
1N941B	♦△MOTA	191-114
BNT	CODI	
♦CRL	♦DIC	
GSE	IDC	
SDI	SEN	
SOIF	TEC	
TNC	USS	
	WSI	
JAN1N941B	DIC	191-115
ESP	GSE	
MOTA	USS	
1N942	♦△MOTA	191-116
AMD	BNT	
CNS	CODI	
♦CRL	♦DIC	
GSE	IDC	
SDI	SEN	
SOIF	TEC	
TNC	USS	
	WSI	
1N942A	♦△MOTA	191-117
BNT	CODI	
♦CRL	♦DIC	
GSE	IDC	
SDI	SEN	
SOIF	TEC	
TNC	USS	
	WSI	
1N942B	♦△MOTA	191-118
BNT	CODI	
♦CRL	♦DIC	
GSE	IDC	
SDI	SEN	
SOIF	TEC	
TNC	USS	
	WSI	
1N943	♦△MOTA	191-119
AMD	BNT	
CNS	CODI	
♦CRL	♦DIC	
GSE	IDC	
SDI	SEN	
SOIF	TEC	
TNC	USS	
	WSI	
1N943A	♦△MOTA	191-120
BNT	CODI	
♦CRL	♦DIC	
GSE	IDC	
SDI	SEN	
SOIF	TEC	
TNC	USS	
	WSI	
1N943B	♦△MOTA	191-121
BNT	CODI	
♦CRL	♦DIC	
GSE	IDC	
SDI	SEN	
SOIF	TEC	
TNC	USS	
	WSI	
JAN1N943B	△MOTA	191-122
cont next col		

TYPE No.	MFRS	Pg&Line
JAN1N943B		
(cont.)	DIC	
ESP	GSE	
	USS	
1N944	♦△MOTA	191-123
AMD	BNT	
CNS	CODI	
♦CRL	♦DIC	
GSE	IDC	
SDI	SEN	
SOIF	TEC	
TNC	USS	
	WSI	
1N944A	♦△MOTA	191-124
BNT	CODI	
♦CRL	♦DIC	
GSE	IDC	
SDI	SEN	
SOIF	TEC	
TNC	USS	
	WSI	
1N944B	♦△MOTA	191-125
BNT	CODI	
♦CRL	♦DIC	
GSE	IDC	
SDI	SEN	
SOIF	TEC	
TNC	USS	
	WSI	
JAN1N944B	DIC	191-126
ESP	GSE	
MOTA	USS	
1N945	♦△MOTA	191-127
AMD	BNT	
CNS	CODI	
CRL	♦DIC	
GSE	IDC	
ITT	SDI	
SEN	SES	
TEC	TNC	
USS	WSI	
1N945A	♦△MOTA	191-128
BNT	CODI	
CRL	♦DIC	
GSE	IDC	
SDI	SEN	
TEC	TNC	
USS	WSI	
1N945B	♦△MOTA	191-129
BNT	CODI	
CRL	♦DIC	
GSE	IDC	
SDI	SEN	
TEC	TNC	
USS	WSI	
JAN1N945B	DIC	191-130
	USS	
1N946	♦△MOTA	191 - 87
AMD	BNT	
CNS	CODI	
♦DIC	GSE	
IDC	SEN	
TEC	USS	
1N946A	♦△MOTA	191 - 88
BNT	CODI	
♦DIC	GSE	
IDC	SEN	
TEC	USS	
1N946B	♦△MOTA	191 - 89
BNT	CODI	
♦DIC	GSE	
IDC	SEN	
TEC	USS	
1N947	AMD	346 - 11
BNT	CNS	
IDC	ITT	
	SEN	
1N948	△TEC	268 - 89
AMD	BNT	
CNS	IDC	
SEN	SOD	
1N949	AMD	249-105
BNT	CNS	
GELC	GESY	
ITT	SDI	
SEN	SES	
SOD	TEC	
	UPI	
1N950	AMD	555 - 71
BNT	CNS	
♦CODI	♦CRY	
♦EAS	EMLS	
KSC	SOD	
1N950A	BNT	555 - 72
	♦CODI	
1N951	AMD	558-103
BNT	CNS	
♦CODI	♦CRY	
♦EAS	EMLS	
KSC	SOD	
1N951A	BNT	558-104
	♦CODI	
1N952	AMD	561 - 3
BNT	CNS	
♦CODI	♦CRY	
♦EAS	EMLS	
KSC	SOD	
1N952A	BNT	561 - 4
	♦CODI	
1N953	AMD	561 - 88
BNT	CNS	
♦CODI	♦CRY	
♦EAS	EMLS	
KSC	SOD	

△-Registered with JEDEC by this manufacturer

♦-Copy of mfr's data sheet may be ordered from D.A.T.A.

1. TYPE No. CROSS INDEX

IN TYPE NUMBER SEQUENCE

TYPE No.	MFRS	Pg&Line
1N953A	BNT	561- 89
	CODI	
1N954	AMD	555- 73
	BNT	
	CNS	
	CODI	♦CRY
	♦EAS	EMLS
	KSC	SOD
1N955	AMD	558-105
	BNT	
	CNS	
	CODI	♦CRY
	♦EAS	EMLS
	KSC	SOD
1N956	AMD	561- 5
	BNT	
	CNS	
	CODI	♦CRY
	♦EAS	EMLS
	KSC	SOD
1N957,A,B	♦△MOTA	177- 24
	AMD	APD
	ASC	BNT
	CNS	CODI
	♦CRL	♦DIC
	ETC	♦FSC
	GSE	IDC
	INRB	INRC
	INRI	INRJ
	ITT	MSC
	♦MULB	SAR
	SDI	SEN
	SES	♦SLCB
	SOD	SOIF
	TEC	TEK
	TII	TNC
	TRW	TSC
	UNI	USS
		WSI
1N958,A,B	♦△MOTA	179- 77
	AMD	APD
	ASC	BNT
	CNS	CODI
	♦CRL	♦DIC
	ETC	♦FSC
	GSE	IDC
	INRB	INRC
	INRI	INRJ
	ITT	MSC
	♦MULB	SAR
	SDI	SEN
	SES	♦SLCB
	SOD	SOIF
	TEC	TEK
	TII	TNC
	TRW	TSC
	UNI	USS
		WSI
1N959	AMD	181-131
	APD	ASC
	BNT	CNS
	CODI	♦CRL
	♦DIC	ETC
	FSC	GSE
	IDC	INRB
	INRC	INRI
	INRJ	ITT
	KSC	MSC
	♦MULB	NPC
	SAR	SDI
	SEN	SES
	SLCB	SOD
	SOIF	TEC
	TEK	TII
	TNC	TRW
	TSC	UNI
	USS	WSI
1N959A	AMD	181-132
	APD	ASC
	BNT	CNS
	CODI	♦CRL
	♦DIC	ETC
	FSC	GSE
	IDC	INRB
	INRC	INRI
	INRJ	ITT
	MSC	♦MULB
	NPC	SAR
	SDI	SEN
	SES	SLCB
	SOD	SOIF
	TEC	TEK
	TII	TNC
	TRW	TSC
	UNI	USS
		WSI
1N959B	AMD	181-133
	APD	ASC
	BNT	CNS
	CODI	♦CRL
	♦DIC	ETC
	FSC	GSE
	IDC	INRB
	INRC	INRI
	INRJ	ITT
	MSC	♦MULB
	NPC	SAR
	SDI	SEN
	SES	SLCB
	SOD	SOIF
	TEC	TEK
	TII	TNC
	TRW	TSC
	UNI	USS
		WSI
1N960,A,B	♦△MOTA	185- 57
cont next col		

TYPE No.	MFRS	Pg&Line
1N960,A,B		
(cont)	AMD	
	APD	ASC
	BNT	CNS
	CODI	♦CRL
	♦DIC	ESP
	ETC	♦FSC
	GSE	IDC
	INRB	INRC
	INRI	INRJ
	ITT	MSC
	♦MULB	NPC
	SAR	SDI
	SEN	SES
	♦SLCB	SOD
	SOIF	TEC
	TEK	TII
	TNC	TRW
	TSC	UNI
	UNI	USS
		WSI
1N961,A,B	♦△MOTA	187-123
	AMD	APD
	ASC	BNT
	CNS	CODI
	♦CRL	♦DIC
	ESP	ETC
	♦FSC	GSE
	IDC	INRB
	INRC	INRI
	INRJ	ITT
	MSC	♦MULB
	♦NPC	SAR
	SDI	SEN
	SES	♦SLCB
	SOD	SOIF
	TEC	TEK
	TII	TNC
	TRW	TSC
	UNI	USS
		WSI
1N962,A,B	♦△MOTA	189-159
	AMD	APD
	ASC	BNT
	CNS	CODI
	♦CRL	♦DIC
	ESP	ETC
	♦FSC	GSE
	IDC	INRB
	INRC	INRI
	INRJ	ITT
	MSC	♦MULB
	♦NPC	SAR
	SDI	SEN
	SES	♦SLCB
	SOD	SOIF
	TEC	TEK
	TNC	TRW
	TSC	UNI
	USS	WSI
JAN1N962B	CRL	189-160
	DIC	ESP
	FSC	MOTA
	TSC	USS
1N963,A,B	♦△MOTA	192- 2
	AMD	APD
	ASC	BNT
	CNS	CODI
	♦CRL	♦DIC
	ESP	ETC
	♦FSC	GSE
	IDC	INRB
	INRC	INRI
	INRJ	ITT
	MSC	♦MULB
	♦NPC	SAR
	SDI	SEN
	SES	♦SLCB
	SOD	SOIF
	TEC	TEK
	TNC	TRW
	TSC	UNI
	USS	WSI
JAN1N963B	CRL	192- 3
	DIC	ESP
	FSC	MOTA
	TSC	USS
1N964,A,B	♦△MOTA	194- 88
	AMD	APD
	ASC	BNT
	CNS	CODI
	♦CRL	♦DIC
	ESP	ETC
	♦FSC	GSE
	IDC	INRB
	INRC	INRI
	INRJ	ITT
	MSC	♦MULB
	♦NPC	SAR
	SDI	SEN
	SES	♦SLCB
	SOD	SOIF
	TEC	TEK
	TNC	TRW
	TSC	UNI
	USS	WSI
JAN1N964B	CRL	194- 89
	DIC	ESP
	FSC	MOTA
	TSC	USS
1N965,A,B	♦△MOTA	197- 35
	AMD	APD
	ASC	BNT
	CNS	CODI
cont next col		

TYPE No.	MFRS	Pg&Line
1N965,A,B		
(cont)	♦CRL	
	♦DIC	ESP
	ETC	♦FSC
	GSE	IDC
	INRB	INRC
	INRI	INRJ
	ITT	MSC
	♦MULB	♦NPC
	SAR	SDI
	SEN	SES
	♦SLCB	SOD
	SOIF	TEC
	TEK	TNC
	TRW	TSC
	UNI	USS
		WSI
JAN1N965B	CRL	197- 36
	DIC	ESP
	FSC	MOTA
	TSC	USS
1N966,A,B	♦△MOTA	199- 40
	AMD	APD
	ASC	BNT
	CNS	CODI
	♦CRL	♦DIC
	ESP	ETC
	♦FSC	GSE
	IDC	INRB
	INRC	INRI
	INRJ	ITT
	MSC	♦MULB
	♦NPC	SAR
	SDI	SEN
	SES	♦SLCB
	SOD	SOIF
	TEC	TEK
	TNC	TRW
	TSC	UNI
	USS	WSI
JAN1N966B	CRL	199- 41
	DIC	ESP
	FSC	MOTA
	TSC	USS
1N967,A,B	♦△MOTA	201-119
	AMD	APD
	ASC	BNT
	CNS	CODI
	♦CRL	♦DIC
	ESP	ETC
	♦FSC	GSE
	IDC	INRB
	INRC	INRI
	INRJ	ITT
	MSC	♦MULB
	♦NPC	SAR
	SDI	SEN
	SES	♦SLCB
	SOD	SOIF
	TEC	TEK
	TNC	TRW
	TSC	UNI
	USS	WSI
JAN1N967B	CRL	201-120
	DIC	ESP
	FSC	MOTA
	TSC	USS
1N968,A,B	♦△MOTA	204- 93
	AMD	APD
	ASC	BNT
	CNS	CODI
	♦CRL	♦DIC
	ESP	ETC
	♦FSC	GSE
	IDC	INRB
	INRC	INRI
	INRJ	ITT
	MSC	♦MULB
	♦NPC	SAR
	SDI	SEN
	SES	♦SLCB
	SOD	SOIF
	TEC	TEK
	TNC	TRW
	TSC	UNI
		USS
JAN1N968B	CRL	204- 94
	DIC	ESP
	FSC	MOTA
	TSC	USS
1N969,A,B	♦△MOTA	206- 61
	AMD	APD
	ASC	BNT
	CNS	CODI
	♦CRL	♦DIC
	ESP	ETC
	♦FSC	GSE
	IDC	INRB
	INRC	INRI
	INRJ	ITT
	MSC	♦MULB
	♦NPC	SAR
	SDI	SEN
	SES	♦SLCB
	SOD	SOIF
	TEC	TEK
	TNC	TRW
	TSC	UNI
		USS
JAN1N969B	CRL	206- 62
	DIC	ESP
	FSC	MOTA
	TSC	USS
1N970,A,B	♦△MOTA	208- 60
cont next col.		

TYPE No.	MFRS	Pg&Line
1N970,A,B		
(cont)	AMD	
	APD	ASC
	BNT	CNS
	CODI	♦CRL
	♦DIC	ESP
	ETC	♦FSC
	GSE	IDC
	INRB	INRC
	INRI	INRJ
	ITT	MSC
	♦MULB	♦NPC
	SAR	SDI
	SEN	SES
	♦SLCB	SOD
	SOIF	TEC
	TEK	TNC
	TSC	UNI
		USS
JAN1N970B	CRL	208- 61
	DIC	ESP
	FSC	MOTA
	TSC	USS
1N971,A,B	♦△MOTA	210-126
	AMD	APD
	ASC	BNT
	CNS	CODI
	♦CRL	♦DIC
	ESP	ETC
	♦FSC	GSE
	IDC	INRB
	INRC	INRI
	INRJ	ITT
	MSC	♦MULB
	♦NPC	SAR
	SDI	SEN
	SES	♦SLCB
	SOD	SOIF
	TEC	TEK
	TNC	TSC
	UNI	USS
JAN1N971B	CRL	210-127
	DIC	ESP
	FSC	MOTA
	TSC	USS
1N972,A,B	♦△MOTA	212-162
	AMD	APD
	ASC	BNT
	CNS	CODI
	♦CRL	♦DIC
	ESP	♦ETC
	♦FSC	GSE
	IDC	INRB
	INRC	INRI
	INRJ	ITT
	MSC	♦MULB
	♦NPC	SAR
	SDI	SEN
	SES	♦SLCB
	SOD	SOIF
	TEC	TEK
	TNC	TSC
	UNI	USS
JAN1N972B	CRL	212-163
	DIC	ESP
	FSC	MOTA
	TSC	USS
1N973,A,B	♦△MOTA	214-112
	AMD	APD
	ASC	BNT
	CNS	CODI
	♦CRL	♦DIC
	ESP	♦ETC
	♦FSC	GSE
	IDC	INRB
	INRC	INRI
	INRJ	ITT
	MSC	♦NPC
	SAR	SDI
	SEN	SES
	SOD	SOIF
	TEC	TEK
	TNC	TSC
	UNI	USS
JAN1N973B	CRL	214-113
	DIC	ESP
	FSC	♦MOTA
	TSC	USS
1N974,A,B	♦△MOTA	216- 71
	AMD	ASC
	BNT	CNS
	CODI	♦CRL
	♦DIC	ESP
	♦FSC	GSE
	IDC	ITT
	MSC	♦NPC
	SAR	SDI
	SEN	SES
	SOD	SOIF
	TEC	TEK
	TNC	TSC
	UNI	USS
JAN1N974B	DIC	216- 72
	ESP	MOTA
	TSC	USS
1N975,A,B	♦△MOTA	217-145
	AMD	ASC
	BNT	CNS
	CODI	♦CRL
	♦DIC	ESP
	♦ETC	♦FSC
	GSE	IDC
	ITT	MSC
cont next col.		

TYPE No.	MFRS	Pg&Line
1N975,A,B		
(cont)	♦NPC	
	SAR	SDI
	SEN	SES
	SOD	SOIF
	TEC	TEK
	TNC	TSC
	UNI	USS
JAN1N975B	DIC	217-146
	ESP	MOTA
	TSC	USS
1N976,A,B	♦△MOTA	219- 50
	AMD	ASC
	BNT	CNS
	CODI	♦CRL
	♦DIC	ESP
	♦ETC	♦FSC
	GSE	IDC
	ITT	MSC
	♦NPC	SAR
	SDI	SEN
	SES	SOIF
	TEC	TEK
	TNC	TSC
	UNI	USS
JAN1N976B	DIC	219- 51
	ESP	MOTA
	TSC	USS
1N977,A,B	♦△MOTA	220-171
	AMD	ASC
	BNT	CNS
	CODI	♦CRL
	♦DIC	ESP
	♦ETC	♦FSC
	GSE	IDC
	ITT	MSC
	♦NPC	SAR
	SDI	SEN
	SES	SOIF
	TEC	TEK
	TNC	TSC
	UNI	USS
JAN1N977B	DIC	220-172
	ESP	MOTA
	TSC	USS
1N978,A,B	♦△MOTA	222-128
	AMD	ASC
	BNT	CNS
	CODI	♦CRL
	♦DIC	ESP
	♦ETC	♦FSC
	GSE	IDC
	ITT	MSC
	♦NPC	SAR
	SDI	SEN
	SES	SOIF
	TEC	TEK
	TNC	TSC
	UNI	USS
JAN1N978B	DIC	222-129
	ESP	MOTA
	TSC	USS
1N979,A,B	♦△MOTA	224- 20
	AMD	ASC
	BNT	CNS
	CODI	♦CRL
	♦DIC	ESP
	♦ETC	♦FSC
	GSE	IDC
	ITT	MSC
	♦NPC	SAR
	SDI	SEN
	SES	SOIF
	TEC	TEK
	TNC	TSC
	UNI	USS
JAN1N979B	DIC	224- 21
	ESP	MOTA
	TSC	USS
1N980,A,B	♦△MOTA	225-159
	AMD	ASC
	BNT	CNS
	CODI	♦CRL
	♦DIC	ESP
	♦ETC	♦FSC
	GSE	IDC
	ITT	MSC
	♦NPC	SAR
	SDI	SEN
	SES	SOIF
	TEC	TEK
	TNC	TSC
	UNI	USS
JAN1N980B	DIC	225-160
	ESP	MOTA
	TSC	USS
1N981,A,B	♦△MOTA	227- 29
	AMD	ASC
	BNT	CNS
	CODI	♦CRL
	♦DIC	ESP
	♦ETC	♦FSC
	GSE	IDC
	ITT	MSC
	♦NPC	SAR
	SDI	SEN
	SES	SOIF
	TEC	TEK
	TNC	TSC
	UNI	USS
JAN1N981B	DIC	227- 30
	ESP	MOTA
	TSC	USS

△-Registered with JEDEC by this manufacturer

♦-Copy of mfr's data sheet may be ordered from D.A.T.A.

1. TYPE No. CROSS INDEX

IN TYPE NUMBER SEQUENCE

TYPE No.	MFRS	Pg&Line
1N982,A,B	♦△MOTA	228-129
AMD	ASC	
BNT	CNS	
CODI	♦CRL	
♦DIC	ESP	
♦FSC	GSE	
ITT	MSC	
♦NPC	SAR	
SDI	SEN	
SES	SOIF	
TEC	TEK	
TNC	TSC	
UNI	USS	
JAN1N982B	DIC	228-130
ESP	MOTA	
TSC	USS	
1N983,A,B	♦△MOTA	230- 28
AMD	ASC	
BNT	CNS	
CODI	♦CRL	
♦DIC	ESP	
♦FSC	GSE	
IDC	ITT	
MSC	♦NPC	
SAR	SDI	
SEN	SES	
SOIF	TEC	
TEK	TNC	
TSC	UNI	
	USS	
JAN1N983B	DIC	230- 29
ESP	MOTA	
TSC	USS	
1N984,A,B	♦△MOTA	231-152
AMD	ASC	
BNT	CNS	
CODI	♦CRL	
♦DIC	ESP	
♦FSC	GSE	
IDC	ITT	
MSC	♦NPC	
SAR	SDI	
SEN	SES	
SOIF	TEC	
TEK	TNC	
UNI	USS	
JAN1N984B	DIC	231-153
ESP	MOTA	
TSC	USS	
1N985,A,B	♦△MOTA	233- 8
AMD	ASC	
BNT	CNS	
CODI	♦CRL	
♦DIC	ESP	
♦FSC	GSE	
IDC	ITT	
MSC	♦NPC	
SAR	SDI	
SEN	SES	
SOIF	TEK	
TNC	UNI	
	USS	
JAN1N985B	ESP	233- 9
	MOTA	
1N986,A,B	♦△MOTA	234-145
AMD	ASC	
BNT	CNS	
CODI	♦CRL	
♦DIC	ESP	
♦FSC	GSE	
IDC	ITT	
MSC	♦NPC	
SAR	SDI	
SEN	SES	
SOIF	TEK	
TNC	UNI	
	USS	
JAN1N986B	ESP	234-146
	MOTA	
1N987,A,B	♦△MOTA	236- 7
AMD	ASC	
BNT	CNS	
CODI	♦CRL	
♦DIC	ESP	
♦FSC	GSE	
IDC	ITT	
MSC	♦NPC	
SAR	SDI	
SEN	SES	
SOIF	TEK	
TNC	UNI	
	USS	
JAN1N987B	ESP	236- 8
	MOTA	
1N988,A,B	♦△MOTA	237- 50
AMD	ASC	
BNT	CNS	
CODI	♦CRL	
♦DIC	ESP	
♦FSC	GSE	
IDC	ITT	
MSC	♦NPC	
SAR	SDI	
SEN	SES	
SOIF	TEK	
TNC	UNI	
	USS	
JAN1N988B	ESP	237- 51
	MOTA	
1N989,A,B	♦△MOTA	239- 21
AMD	ASC	
BNT	CNS	
CODI	♦CRL	
cont.next col.		

TYPE No.	MFRS	Pg&Line
1N989,A,B		
(cont)	♦DIC	
ESP	♦FSC	
GSE	IDC	
ITT	MSC	
♦NPC	SAR	
SDI	SEN	
SES	SOIF	
TEK	TNC	
UNI	USS	
JAN1N989B	ESP	239- 22
	MOTA	
1N990,A,B	♦△MOTA	240- 55
AMD	ASC	
BNT	CNS	
CODI	♦CRL	
♦DIC	ESP	
♦FSC	GSE	
IDC	ITT	
MSC	♦NPC	
SAR	SDI	
SEN	SES	
SOIF	TEK	
TNC	UNI	
	USS	
JAN1N990B	ESP	240- 56
	MOTA	
1N991,A,B	♦△MOTA	241-152
AMD	ASC	
BNT	CNS	
CODI	♦CRL	
♦DIC	ESP	
♦FSC	GSE	
IDC	ITT	
MSC	♦NPC	
SAR	SDI	
SEN	SES	
SOIF	TEK	
TNC	UNI	
	USS	
JAN1N991B	ESP	241-153
	MOTA	
1N992,A,B	♦△MOTA	243- 32
AMD	ASC	
BNT	CNS	
CODI	♦CRL	
♦DIC	ESP	
♦FSC	GSE	
ITT	MSC	
SAR	SDI	
SEN	SES	
TEK	TNC	
UNI	USS	
JAN1N992B	ESP	243- 33
	MOTA	
1N993	△TEC	263- 85
AMD	CNS	
CODI	IDC	
ITT	SES	
SSI	TSC	
1N994	△TEC	263- 60
AMD	CNS	
GELC	IDC	
ITT	SES	
	SSI	
1N995	△TEC	265- 14
AMD	BNT	
CNS	EMLS	
ESMF	GELC	
IDC	ITT	
MISI	NECJ	
NPC	SDI	
SES	SSI	
JAN1N995	GIC	265- 15
	TEC	
1N996	△TEC	266- 5
AMD	CNS	
GELC	IDC	
ITT	SDI	
SES	SSI	
1N997	AMD	268- 76
CNS	CODI	
IDC	ITT	
SES	SSI	
1N998	△RAYN	307- 45
AMD	CNS	
SSI	UPI	
1N999	CNS	277- 49
IDC	SSI	
1N1028	IDC	293- 37
	SSI	
1N1029	SSI	299- 84
1N1030	SSI	307- 72
1N1031	SSI	310- 49
	UPI	
1N1032	SSI	320- 95
	UPI	
1N1033	SSI	329- 9
	UPI	
1N1034	EDL	294- 41
IDC	SCN	
	SSI	
1N1035	EDL	301- 30
IDC	SCN	
	SSI	
1N1036	EDL	307- 88
SCN	SSI	
1N1037	EDL	312- 30
SCN	SSI	
1N1038	EDL	322- 3
IDC	SCN	
	SSI	
1N1039	EDL	331- 11
SCN	SSI	

TYPE No.	MFRS	Pg&Line
1N1040	EDL	294- 42
IDC	SCN	
	SSI	
1N1041	EDL	301- 31
IDC	SCN	
	SSI	
1N1042	EDL	307- 89
SCN	SSI	
1N1043	EDL	312- 31
SCN	SSI	
1N1044	EDL	322- 4
IDC	SCN	
	SSI	
1N1045	EDL	331- 12
SCN	SSI	
1N1046	IDC	294- 43
ITT	SSI	
1N1047	IDC	301- 32
ITT	SSI	
1N1048	ITT	307- 90
	SSI	
1N1049	ITT	312- 32
	SSI	
1N1050	IDC	322- 5
ITT	SSI	
1N1051	ITT	331- 13
	SSI	
1N1052	♦△SAR	294-108
IDC	SSI	
	UPI	
1N1053	♦△SAR	302- 11
SSI	UPI	
1N1054	♦△SAR	307- 94
SSI	UPI	
1N1055	♦△SAR	313- 13
SSI	UPI	
1N1056	♦△SAR	322- 74
SSI	UPI	
1N1057	♦△SAR	331-110
SSI	UPI	
1N1058	♦△SAR	295-101
IDC	SOD	
	SSI	
1N1059	♦△SAR	303- 48
EDL	SOD	
	SSI	
1N1060	♦△SAR	307-110
EDL	SOD	
	SSI	
1N1061	♦△SAR	314- 62
EDL	SOD	
	SSI	
1N1062	♦△SAR	323- 84
EDL	SOD	
	SSI	
1N1063	♦△SAR	333- 54
EDL	SOD	
	SSI	
1N1064	♦△SAR	295-102
EDL	IDC	
SOD	SSI	
1N1065	♦△SAR	303- 49
SOD	SSI	
1N1066	♦△SAR	308- 1
EDL	SOD	
	SSI	
1N1067	♦△SAR	314- 63
SOD	SSI	
1N1068	♦△SAR	323- 85
SOD	SSI	
1N1069	♦△SAR	333- 55
EDL	SOD	
	SSI	
1N1070	△SAR	295-103
	SSI	
1N1071	△SAR	303- 50
	SSI	
1N1072	△SAR	308- 2
	SSI	
1N1073	△SAR	314- 64
	SSI	
1N1074	△SAR	323- 86
	SSI	
1N1075	△SAR	333- 56
	SSI	
1N1076	♦△SAR	296- 85
	SSI	
1N1077	♦△SAR	304- 64
1N1078	♦△SAR	308- 25
1N1079	♦△SAR	315- 96
1N1080	♦△SAR	324- 77
1N1081	△SAR	299- 85
INRB	INRC	
INRI	INRJ	
PWC	SCN	
	SOD	
1N1081A	SCN	300- 23
	SOD	
1N1082	△SAR	310- 50
INRB	INRC	
INRI	INRJ	
PWC	SCN	
	SOD	
1N1082A	SCN	310-109
	SOD	
1N1083	△SAR	320- 96
INRB	INRC	
INRI	INRJ	
PWC	SCN	
	SOD	
1N1083A	SCN	321- 30
	SOD	
1N1084	△SAR	329- 10
cont.next col		

TYPE No.	MFRS	Pg&Line
1N1084		
(cont)	INRB	
INRC	INRI	
INRJ	PWC	
SCN	SOD	
JAN1N1084	none	338- 70
1N1084A	SCN	329- 83
	SOD	
1N1085	SCN	302- 12
	SOD	
1N1085A	SAR	302- 62
SCN	SOD	
1N1086	IDC	313- 14
SCN	SOD	
1N1086A	SAR	313- 68
SCN	SOD	
1N1087	SCN	322- 75
	SOD	
1N1087A	SAR	323- 5
SCN	SOD	
1N1088	SCN	332- 1
	SOD	
1N1088A	SAR	332- 54
SCN	SOD	
1N1089	△SAR	303- 51
SCN	SOD	
1N1089A	♦SAR	303- 52
1N1090	△SAR	314- 65
IDC	SCN	
	SOD	
1N1090A	♦SAR	314- 66
1N1091	△SAR	323- 87
SCN	SOD	
1N1091A	♦SAR	323- 88
1N1092	△SAR	333- 57
SCN	SOD	
1N1092A	♦SAR	333- 58
1N1093	IDC	265- 30
ITT	SES	
1N1095	BRA	340- 1
ETC	GELC	
GIC	GICC	
IDC	INRB	
INRC	INRI	
INRJ	ITT	
NPC	♦RCA	
SAR	SCN	
SES	SOD	
TEC	♦TII	
TIIB	TIID	
	TIIF	
1N1096	BRA	347- 2
ETC	GELC	
GIC	GICC	
IDC	INRB	
INRC	INRI	
INRJ	ITT	
NPC	SAR	
SCN	SES	
SOD	TEC	
♦TII	TIIB	
TIID	TIIF	
1N1100	△GIC	300- 50
BRA	ETC	
GELC	GICC	
IDC	INRB	
INRC	INRI	
INRJ	ITT	
SAR	SCN	
SES	TEC	
TII	TIID	
TIIF	UPI	
1N1101	△GIC	311- 33
BRA	ETC	
GELC	GICC	
IDC	INRB	
INRC	INRI	
INRJ	ITT	
SAR	SCN	
SES	TEC	
TII	TIID	
TIIF	UPI	
1N1102	△GIC	321- 56
BRA	ETC	
GELC	GICC	
IDC	INRB	
INRC	INRI	
INRJ	ITT	
SAR	SCN	
SES	TEC	
TII	TIID	
TIIF	UPI	
1N1103	△GIC	330- 9
BRA	ETC	
GELC	GICC	
IDC	INRB	
INRC	INRI	
INRJ	ITT	
SAR	SCN	
SES	TEC	
TII	TIID	
TIIF	UPI	
1N1104	△GIC	340- 27
BRA	ETC	
GICC	IDC	
INRB	INRC	
INRI	INRJ	
ITT	SAR	
SCN	SES	
TEC	TII	
TIID	TIIF	
1N1105	△GIC	347- 26
BRA	ETC	
cont.next col.		

TYPE No	MFRS	Pg&Line
1N1105		
(cont)	GICC	
IDC	INRB	
INRC	INRI	
INRJ	ITT	
SAR	SCN	
SES	TEC	
TII	TIID	
	TIIF	
1N1108	♦△SAR	359- 39
ETC	GIC	
IDC	SCN	
SET	SOD	
SSI	TEC	
1N1109	♦△SAR	377- 76
GIC	SCN	
SET	SOD	
	SSI	
1N1110	♦△SAR	385- 97
GIC	SCN	
SET	SOD	
	SSI	
1N1111	♦△SAR	389-100
GIC	SCN	
SET	SOD	
	SSI	
1N1112	♦△SAR	391- 75
GIC	SCN	
SET	SOD	
	SSI	
1N1113	♦△SAR	393- 23
GIC	SCN	
SET	SOD	
	SSI	
1N1115	BRA	302- 10
EDI	EDL	
ETC	GELC	
GIC	GICC	
IDC	INRB	
INRC	INRI	
INRJ	ITT	
MOTA	SAR	
SCN	SES	
SOD	SSI	
TEC	TII	
TIID	TIIF	
	UPI	
1N1116	BRA	313- 12
EDI	EDL	
ETC	GELC	
GIC	GICC	
IDC	INRB	
INRC	INRI	
INRJ	ITT	
MOTA	SAR	
SCN	SES	
SOD	SSI	
TEC	TII	
TIID	TIIF	
	UPI	
1N1117	BRA	322- 73
EDI	EDL	
ETC	GELC	
GIC	GICC	
INRB	INRC	
INRI	INRJ	
ITT	MOTA	
SAR	SCN	
SES	SOD	
SSI	TEC	
TII	TIID	
TIIF	UPI	
1N1118	BRA	331-109
EDI	EDL	
ETC	GELC	
GIC	GICC	
INRB	INRC	
INRI	INRJ	
ITT	MOTA	
SAR	SCN	
SES	SOD	
SSI	TEC	
TII	TIIB	
TIID	TIIF	
	UPI	
1N1119	BRA	341- 37
EDI	EDL	
ETC	GELC	
GIC	GICC	
INRB	INRC	
INRI	INRJ	
ITT	MOTA	
SAR	SCN	
SES	SOD	
SSI	TEC	
TII	TIIB	
TIID	TIIF	
1N1120	BRA	349- 17
EDI	EDL	
ETC	GELC	
GIC	GICC	
IDC	INRB	
INRC	INRI	
INRJ	ITT	
MOTA	SAR	
SCN	SES	
SOD	SSI	
TEC	TII	
TIIB	TIID	
	TIIF	
1N1124	BRA	314- 3
EDI	EDL	
ETC	GIC	
cont.next page		

△-Registered with JEDEC by this manufacturer

♦-Copy of mfr's data sheet may be ordered from D.A.T.A.

1. TYPE No. CROSS INDEX

IN TYPE NUMBER SEQUENCE

TYPE No.	MFRS	Pg&Line
1N1124 (cont)	INRB	
	INRC	
	INRI	
	INRJ	
	ITT	
	MOTA	
	SAR	
	SCN	
	SES	
	SET	
	SOD	
	SSI	
	SYN	
	TEC	
	TIIB	
	TIID	
	TIIF	
	TNC	
	UPI	
	WESY	
1N1124A	BRA	319 - 34
	EDI	
	EDL	
	ETC	
	GIC	
	IDC	
	INRB	
	INRC	
	INRI	
	INRJ	
	MOTA	
	SAR	
	SCN	
	SES	
	SOD	
	SSI	
	TEC	
	TII	
	TIID	
	TIIF	
	TNC	
	UPI	
	WESY	
JAN1N1124A,RA	EDI	319 - 35
	SOD	
1N1125	BRA	323 - 37
	EDI	
	EDL	
	ETC	
	GIC	
	IDC	
	INRB	
	INRC	
	INRI	
	INRJ	
	ITT	
	MOTA	
	SAR	
	SCN	
	SES	
	SET	
	SOD	
	SSI	
	SYN	
	TEC	
	TIIB	
	TIID	
	TIIF	
	TNC	
	UPI	
	WESY	
1N1125A	BRA	323 - 62
	EDI	
	EDL	
	ETC	
	GIC	
	IDC	
	INRB	
	INRC	
	INRI	
	INRJ	
	MOTA	
	SAR	
	SCN	
	SOD	
	SSI	
	TEC	
	TII	
	TIID	
	TIIF	
	TNC	
	UPI	
1N1126	BRA	332 -104
	EDI	
	EDL	
	ETC	
	GIC	
	INRB	
	INRC	
	INRI	
	INRJ	
	ITT	
	MOTA	
	SAR	
	SCN	
	SES	
	SET	
	SOD	
	SSI	
	SYN	
	TEC	
	TIIB	
	TIID	
	TIIF	
	TNC	
	UPI	
	WESY	
1N1126A	BRA	342 - 18
	EDI	
	EDL	
	ETC	
	GIC	
	INRB	
	INRC	
	INRI	
	INRJ	
	MOTA	
	SAR	
	SCN	
	SES	
	SOD	
	SSI	
	TEC	
	TII	
	TIID	
	TIIF	
	TNC	
	WESY	
JAN1N1126A,RA	EDI	342 - 19
	SOD	
1N1127	BRA	341 -106
	EDI	
	EDL	
	ETC	
	GIC	
	INRB	
	INRC	
	INRI	
	INRJ	
	ITT	
	MOTA	
	SAR	
	SCN	
	SES	
	SET	
	SOD	
	SSI	
	SYN	
	TEC	
	TIIB	
	TIID	
	TIIF	
	TNC	
	WESY	
1N1127A	BRA	342 - 20
	EDI	
	EDL	
	ETC	
	GIC	
	INRB	
	INRC	
	INRI	
	INRJ	
	MOTA	
	SAR	
	SCN	
	SOD	
	SSI	
	TEC	
	TII	
	TIID	
	TIIF	
	TNC	
1N1128	BRA	350 - 12
	EDI	
	EDL	
	ETC	
	GIC	
	INRB	
	INRC	
	INRI	
	INRJ	
	ITT	
	MOTA	
	SAR	
	SCN	
	SES	
	SET	
	SOD	
	SSI	
	SYN	
	TEC	
	TIIB	
	TIID	
	TIIF	
	TNC	
	WESY	

TYPE No.	MFRS	Pg&Line
1N1128A	BRA	358 - 98
	EDI	
	EDL	
	ETC	
	GIC	
	IDC	
	INRB	
	INRC	
	INRI	
	INRJ	
	MOTA	
	SAR	
	SCN	
	SES	
	SOD	
	SSI	
	TEC	
	TII	
	TIID	
	TIIF	
	TNC	
	WESY	
JAN1N1128A,RA	EDI	358 - 99
	SOD	
1N1130	EDI	384 - 39
	GIC	
	GICC	
	INRB	
	INRC	
	INRI	
	INRJ	
	SCN	
	SES	
	TEC	
	TIIB	
	TNC	
JAN1N1130	EDI	387 - 76
1N1131	EDI	384 - 40
	GIC	
	GICC	
	INRB	
	INRC	
	INRI	
	INRJ	
	ITT	
	SCN	
	SES	
	TIIB	
	TNC	
JAN1N1131	EDI	387 - 77
1N1132	♦△ALP	512 - 15
	MIC	
JAN1N1132,R	ALP	512 - 10
1N1133	BRA	383 -107
	♦DIC	
	EDI	
	GELC	
	GIC	
	GICC	
	INRB	
	INRC	
	INRI	
	INRJ	
	ITT	
	SAR	
	SCN	
	SCO	
	SET	
	SOD	
	SSI	
	TEC	
	TNC	
	TRW	
1N1134	△INRC	384 - 12
	BRA	
	♦DIC	
	EDI	
	GIC	
	GICC	
	INRB	
	INRI	
	INRJ	
	ITT	
	SAR	
	SCN	
	SCO	
	SET	
	SOD	
	SSI	
	TEC	
	TNC	
	TRW	
1N1135	BRA	388 - 2
	♦DIC	
	EDI	
	GIC	
	GICC	
	INRB	
	INRC	
	INRI	
	INRJ	
	ITT	
	SAR	
	SCN	
	SCO	
	SET	
	SOD	
	SSI	
	TEC	
	TNC	
	TRW	
1N1136	△INRC	388 - 3
	BRA	
	♦DIC	
	EDI	
	GIC	
	GICC	
	INRB	
	INRI	
	INRJ	
	ITT	
	SAR	
	SCN	
	SCO	
	SET	
	SOD	
	SSI	
	TEC	
	TNC	
	TRW	
1N1137	BRA	391 - 61
	♦DIC	
	EDI	
	GELC	
	GIC	
	GICC	
	INRB	
	INRC	
	INRI	
	INRJ	
	ITT	
	SAR	
	SCN	
	SCO	
	SET	
	SOD	
	SSI	
	TEC	
	TNC	
	TRW	
1N1138	BRA	391 - 64
	♦DIC	
	EDI	
	GIC	
	GICC	
	INRB	
	INRC	
	INRI	
	INRJ	
	ITT	
	SAR	
	SCN	
	SCO	
	SET	
	SOD	
	SSI	
	TEC	
	TNC	
	TRW	
1N1139	BRA	395 - 93
	♦DIC	
	EDI	
	GELC	
	GIC	
	GICC	
	INRB	
	INRC	
	INRI	
	INRJ	
	ITT	
	SAR	
	SCN	
	SCO	
	SET	
	SOD	
	SSI	
	TEC	
	TNC	
	TRW	
1N1140	BRA	395 - 94
	♦DIC	
	EDI	
	GIC	
	GICC	
	INRB	
	INRC	
	INRI	
	INRJ	
	ITT	
	SAR	
	SCN	
	SCO	
cont next col		

TYPE No.	MFRS	Pg&Line
1N1140 (cont.)	SET	
	SOD	
	SSI	
	TEC	
	TNC	
	TRW	
1N1141	BRA	398 - 57
	♦DIC	
	EDI	
	GELC	
	GIC	
	GICC	
	INRB	
	INRC	
	INRI	
	INRJ	
	ITT	
	SAR	
	SCN	
	SCO	
	SET	
	SOD	
	SSI	
	TEC	
	TNC	
	TRW	
1N1142	△INRC	398 - 56
	BRA	
	♦DIC	
	EDI	
	GIC	
	GICC	
	INRB	
	INRI	
	INRJ	
	ITT	
	SAR	
	SCN	
	SCO	
	SET	
	SOD	
	SSI	
	TEC	
	TNC	
	TRW	
1N1143	△INRC	400 - 93
	BRA	
	♦DIC	
	EDI	
	GIC	
	GICC	
	INRB	
	INRI	
	INRJ	
	ITT	
	SAR	
	SCN	
	SCO	
	SET	
	SOD	
	SSI	
	TEC	
	TNC	
	TRW	
1N1143A	BRA	400 - 96
	♦DIC	
	EDI	
	GELC	
	GIC	
	GICC	
	GSE	
	INRB	
	INRC	
	INRI	
	INRJ	
	ITT	
	SAR	
	SCN	
	SCO	
	SET	
	SOD	
	SSI	
	TEC	
	TNC	
	TRW	
1N1144	△INRC	402 - 73
	BRA	
	♦DIC	
	EDI	
	GIC	
	GICC	
	INRB	
	INRI	
	INRJ	
	ITT	
	SAR	
	SCN	
	SCO	
	SET	
	SOD	
	SSI	
	TEC	
	TNC	
	TRW	
1N1145	△INRC	402 - 74
	BRA	
	♦DIC	
	EDI	
	GELC	
	GIC	
	GICC	
	INRB	
	INRI	
	INRJ	
	ITT	
	SAR	
	SCN	
	SCO	
	SET	
	SOD	
	SSI	
	TEC	
	TNC	
	TRW	
1N1146	BRA	403 - 44
	♦DIC	
	EDI	
	GELC	
	GIC	
	GICC	
	INRB	
	INRC	
	INRI	
	INRJ	
	ITT	
	SAR	
	SCN	
	SCO	
	SET	
	SOD	
	SSI	
	TEC	
	TNC	
	TRW	
1N1147	BRA	407 - 6
	♦DIC	
	EDI	
	GELC	
	GIC	
	GICC	
	INRB	
	INRC	
	INRI	
	INRJ	
	ITT	
	SAR	
	SCN	
	SCO	
	SET	
	SOD	
	SSI	
	TEC	
	TNC	
	TRW	
JAN1N1147	INRC	407 - 83
1N1148	△INRC	407 - 90
	BRA	
	♦DIC	
	EDI	
	GIC	
	GICC	
	INRB	
	INRI	
	INRJ	
	ITT	
	SAR	
	SCN	
	SCO	
	SET	
	SOD	
	SSI	
	TEC	
	TNC	
	TRW	
1N1149	BRA	408 - 98
	♦DIC	
	EDI	
	GIC	
	GICC	
	INRB	
	INRC	
	INRI	
	INRJ	
	ITT	
	SAR	
	SCN	
	SCO	
	SET	
	SOD	
	SSI	
	TEC	
	TNC	
	TRW	
JAN1N1149	INRC	409 - 71
	TRW	

TYPE No.	MFRS	Pg&Line
1N1150	EDL	386 - 15
	GIC	
	GICC	
	ITT	
	♦SCN	
	SOD	
	SSI	
1N1150A	△SAR	386 - 16
	EDL	
	INRB	
	INRC	
	INRI	
	INRJ	
	ITT	
	SCN	
	SSI	
1N1169	BRA	330 - 10
	GELC	
	GIC	
	GICC	
	INRB	
	INRC	
	INRI	
	INRJ	
	ITT	
	SAR	
	SCN	
1N1169A	BRA	329 - 11
	ETC	
	GIC	
	INRB	
	INRC	
	INRI	
	INRJ	
	ITT	
	SAR	
	SCN	
	TEC	
	UPI	
1N1183	♦△WESY	297 - 41
	AMD	
	BRA	
	EDL	
	ETC	
	♦GESY	
	INRB	
	INRC	
	INRI	
	INRJ	
	ITT	
	♦MOTA	
	SAR	
	SEN	
	SES	
	SOD	
	SOIF	
	SSI	
	SYN	
	TEC	
	TNC	
	TRW	
	♦TUNL	
1N1183A	BRA	297 - 52
	EDL	
	IDC	
	ITT	
	♦RCA	
	SAR	
	SSI	
	SYN	
	TEC	
	TNC	
	♦TUNL	
	WESY	
1N1184	♦△WESY	305 - 41
	AMD	
	BRA	
	EDL	
	ESMF	
	ETC	
	♦GESY	
	INRB	
	INRC	
	INRI	
	INRJ	
	ITT	
	MISI	
	♦MOTA	
	SAR	
	SEN	
	SES	
	SOD	
	SOIF	
	SSI	
	SYN	
	TEC	
	TNC	
	TRW	
	♦TUNL	
	WESY	
JAN1N1184,R	GESY	307 - 32
	TRW	
	WESY	
1N1184A	BRA	305 - 59
	EDL	
	ETC	
	IDC	
	ITT	
	♦RCA	
	SAR	
	SSI	
	SYN	
	TEC	
	TNC	
	♦TUNL	
	WESY	
1N1185	♦△WESY	308 - 48
	AMD	
	BRA	
	EDL	
	ETC	
	♦GESY	
	INRB	
	INRC	
	INRI	
	INRJ	
	ITT	
	♦MOTA	
	SAR	
	SEN	
	SES	
	SOD	
	SSI	
	SYN	
	TEC	
	TNC	
	TRW	
	♦TUNL	
1N1185A	BRA	308 - 56
	EDL	
	IDC	
	ITT	
	SAR	
	SSI	
	SYN	
	TEC	
	TNC	
	♦TUNL	
	WESY	
1N1186	♦△WESY	316 - 84
	AMD	
	BRA	
	EDL	
	ESMF	
	ETC	
	♦GESY	
	INRB	
	INRC	
	INRI	
	INRJ	
	ITT	
	MISI	
	♦MOTA	
	SAR	
	SEN	
	SES	
	SOD	
	SOIF	
	SSI	
	SYN	
	TEC	
	TNC	
	TRW	
	♦TUNL	
JAN1N1186,R	GESY	318 -105
	TRW	
	WESY	
1N1186A	BRA	316 -104
	EDL	
	ETC	
	IDC	
	ITT	
	♦RCA	
	SAR	
	SSI	
	SYN	
	TEC	
	TNC	
	♦TUNL	
	WESY	
1N1187	♦△WESY	325 - 27
	AMD	
	BRA	
	EDL	
	ETC	
	♦GESY	
	INRB	
	INRC	
	INRI	
	INRJ	
	ITT	
	♦MOTA	
	SAR	
	SEN	
	SES	
	SOD	
	SOIF	
cont next col		

TYPE No.	MFRS	Pg&Line
1N1187 (cont.)	SSI	
	SYN	
	TEC	
	TNC	
	TRW	
	♦TUNL	
1N1187A	♦△RCA	325 - 40
	BRA	
	EDL	
	ETC	
	IDC	
	SAR	
	SSI	
	SYN	
	TEC	
	♦TUNL	
	WESY	
1N1188	♦△WESY	335 - 96
	AMD	
	BRA	
	EDL	
	ESMF	
	ETC	
	♦GESY	
	INRB	
	INRC	
	INRI	
	INRJ	
	ITT	
	MISI	
	♦MOTA	
	SAR	
	SEN	
	SES	
	SOD	
	SOIF	
	SSI	
	SYN	
	TEC	
	TNC	
	TRW	
	♦TUNL	
JAN1N1188,R	GESY	338 - 73
	TRW	
	WESY	
1N1188A	♦△RCA	336 - 9
	BRA	
	EDL	
	ETC	
	IDC	
	SAR	
	SSI	
	SYN	
	TEC	
	TNC	
	♦TUNL	
	WESY	
1N1189	♦△WESY	343 - 75
	AMD	
	BRA	
	EDL	
	ETC	
	♦GESY	
	INRB	
	INRC	
	INRI	
	INRJ	
	ITT	
	♦MOTA	
	SAR	
	SEN	
	SES	
	SOD	
	SOIF	
	SSI	
	SYN	
	TEC	
	TNC	
	♦TUNL	
1N1189A	♦△RCA	343 - 85
	BRA	
	EDL	
	ETC	
	IDC	
	SAR	
	SSI	
	SYN	
	TEC	
	TNC	
	♦TUNL	
	WESY	
1N1190	♦△WESY	352 - 81
	AMD	
	BRA	
	EDL	
	ESMF	
	ETC	
	♦GESY	
	INRB	
	INRC	
	INRI	
	INRJ	
	ITT	
	MISI	
	♦MOTA	
	SAR	
	SEN	
	SES	
	SOD	
	SOIF	
	SSI	
	SYN	
	TEC	
	TNC	
	♦TUNL	
JAN1N1190,R	TRW	358 - 78
	WESY	
1N1190A	♦△RCA	352 -100
	BRA	
	EDL	
	IDC	
	SAR	
	SSI	
	SYN	
	TEC	
	TNC	
	♦TUNL	
	WESY	
1N1191	♦△WESY	296 - 98
	BRA	
	EDL	
	ETC	
	GESY	
	INRB	
	INRC	
	INRI	
	INRJ	
	ITT	
	♦MOTA	
	SAR	
	SEN	
	SES	
	SOD	
	SSI	
	SYN	
	TEC	
	TNC	
	♦TUNL	
1N1191A	BRA	297 - 5
	EDL	
	ETC	
	IDC	
	INRB	
	INRC	
	INRI	
	INRJ	
	ITT	
	SAR	
	SSI	
	TEC	
	TUNL	
	UPI	
1N1192	♦△WESY	305 - 21
	BRA	
	EDL	
	ETC	
	GESY	
	INRB	
	INRC	
	INRI	
	INRJ	
	ITT	
	♦MOTA	
	SAR	
	SEN	
	SES	
	SOD	
	SSI	
	SYN	
	TEC	
	TNC	
	♦TUNL	
1N1192A	BRA	304 -110
	EDL	
	ETC	
	IDC	
	INRB	
	INRC	
	INRI	
	INRJ	
	ITT	
	SAR	
	SSI	
	TEC	
	TUNL	
	UPI	
1N1193	♦△WESY	308 - 42
	BRA	
	EDL	
cont.next page		

△-Registered with JEDEC by this manufacturer

♦-Copy of mfr's data sheet may be ordered from D.A.T.A.

1. TYPE No. CROSS INDEX

IN TYPE NUMBER SEQUENCE

TYPE No.	MFRS	Pg&Line
1N1193 (cont)	ETC	
	GESY	
	INRC	
	INRJ	
	♦MOTA	
	SEN	
	SOD	
	SYN	
	TNC	
	♦TUNL	
1N1193A	BRA	308 - 36
	EDL	
	IDC	
	INRC	
	INRJ	
	SAR	
	TEC	
	UPI	
1N1194	♦△WESY	316 - 63
	BRA	
	ETC	
	INRB	
	INRI	
	ITT	
	SAR	
	SES	
	SSI	
	TEC	
	♦MOTA	
	SEN	
	SOD	
	SYN	
	TNC	
	♦TUNL	
1N1194A	BRA	316 - 34
	EDL	
	IDC	
	INRC	
	INRJ	
	SAR	
	SSI	
	TUNL	
1N1195	♦△WESY	325 - 10
	BRA	
	ETC	
	INRB	
	INRI	
	ITT	
	SAR	
	SES	
	SSI	
	TEC	
	♦MOTA	
	SEN	
	SOD	
	SYN	
	TNC	
	♦TUNL	
1N1195A	♦△RCA	324 -105
	BRA	
	♦ESMF	
	GESY	
	INRB	
	INRI	
	ITT	
	♦MOTA	
	SCN	
	SSI	
	TUNL	
1N1196	♦△WESY	335 - 66
	BRA	
	ETC	
	INRB	
	INRI	
	ITT	
	SAR	
	SES	
	SSI	
	TEC	
	♦MOTA	
	SCN	
	SOIF	
	SSI	
	TEC	
	UPI	
1N1196A	♦△RCA	335 - 33
	BRA	
	♦ESMF	
	GESY	
	INRB	
	INRI	
	ITT	
	♦MOTA	
	SCN	
	SSI	
	TEC	
	TUNL	
1N1197	♦△WESY	343 - 60
	BRA	
	ETC	
	INRB	
	INRI	
	ITT	
	SAR	
	SES	
	SSI	
	TEC	
	♦TUNL	
1N1197A	♦△RCA	343 - 46
	BRA	
	♦ESMF	
	GESY	
	INRB	
	INRI	
	ITT	
	♦MOTA	
	SCN	
	SSI	
	TUNL	
1N1198	♦△WESY	352 - 54
	BRA	
	GESY	
	INRC	
	INRJ	
	♦MOTA	
	SEN	
	SOD	
	SYN	
	TNC	
1N1198A	♦△RCA	352 - 30
	BRA	
	♦ESMF	
	IDC	
	INRC	
	INRJ	
	MISI	
	SAR	
	SOIF	
	TEC	
JAN1N1198A,RA	WESY	358 -100
1N1199	△WESY	296 - 61
	AMD	
	EDI	
	ETC	
	INRB	
	INRI	
	ITT	
	SAR	
	SES	
	SOD	
	SYN	
	TNC	
1N1199A	♦△GESY	296 - 62
	BRA	
	ERI	
	IDC	
	INRC	
	INRJ	
	MOTA	
	SAR	
	SEN	
	SOD	
	SYN	
	TNC	
	TUNL	
1N1199B	BRA	296 - 63
	EDL	
	ETC	
	INRB	
	INRI	
	ITT	
	SCN	
	SOD	
	TEC	
	TRW	
	UPI	
1N1200	△WESY	304 - 37
	AMD	
	EDI	
	ETC	
	INRB	
	INRI	
	ITT	
	♦SAR	
	SES	
	SOD	
	SYN	
	TNC	
1N1200A	♦△GESY	304 - 38
	BRA	
	EDL	
	ETC	
	INRB	
	INRI	
	ITT	
	♦RCA	
	SCN	
	SES	
	SSI	
	TEC	
	TRW	
	UPI	
1N1200B	BRA	304 - 39
	EDL	
	ETC	
	INRB	
	INRI	
	ITT	
	SCN	
	SOD	
	TEC	
	TRW	
	UPI	
1N1201	△WESY	308 - 19
	AMD	
	EDI	
	ETC	
	INRB	
	INRI	
	ITT	
	SAR	
	SES	
	SOD	
	SYN	
	TNC	
1N1201A	♦△GESY	308 - 20
	BRA	
	EDL	
	ETC	
	INRB	
	INRI	
	ITT	
	SAR	
	SEN	
	SOD	
	SYN	
	TNC	
	TUNL	
1N1201B	BRA	308 - 21
	EDL	
	ERI	

cont next col

TYPE No.	MFRS	Pg&Line
1N1201B (cont.)	ETC	
	IDC	
	INRC	
	INRJ	
	SAR	
	SES	
	SSI	
	TNC	
	TUNL	
1N1202	△WESY	315 - 65
	AMD	
	EDI	
	ETC	
	INRB	
	INRI	
	ITT	
	♦SAR	
	SES	
	SOD	
	SYN	
	TNC	
1N1202A	♦△GESY	315 - 66
	BRA	
	EDL	
	ETC	
	INRB	
	INRI	
	ITT	
	♦RCA	
	SCN	
	SES	
	SSI	
	TEC	
	TRW	
	UPI	
JAN1N1202A,RA	GESY	315 - 67
	INRC	
	TRW	
1N1202B	BRA	315 - 68
	EDL	
	ETC	
	INRB	
	INRI	
	ITT	
	SCN	
	SOD	
	TEC	
	TRW	
	UPI	
1N1203	△WESY	324 - 53
	AMD	
	EDI	
	ETC	
	INRB	
	INRI	
	ITT	
	♦SAR	
	SES	
	SOD	
	SYN	
	TNC	
1N1203A	♦△GESY	324 - 54
	BRA	
	EDL	
	ETC	
	INRB	
	INRI	
	ITT	
	♦RCA	
	SCN	
	SES	
	SSI	
	TEC	
	TRW	
	UPI	
1N1203B	BRA	324 - 55
	EDL	
	ETC	
	INRB	
	INRI	
	ITT	
	SCN	
	SOD	
	TEC	
	TRW	
	UPI	
1N1204	△WESY	334 - 66
	AMD	
	EDL	
	GESY	
	INRC	
	INRJ	
	MOTA	♦SAR
	SEN	
	SET	
	SSI	
	TEC	
1N1204A	♦△GESY	334 - 67
	BRA	
	EDL	
	ETC	
	INRB	
	INRI	
	ITT	
	♦RCA	
	SCN	
	SES	
	SSI	
	TEC	
	TRW	
	UPI	
JAN1N1204A,RA	GESY	334 - 68
	INRC	
	TRW	
1N1204B	BRA	334 - 69
	EDL	
	ETC	
	INRB	
	INRI	
	ITT	
	SCN	
	SOD	
	TEC	
	TRW	
	UPI	
1N1205	△WESY	342 -105
	AMD	
	EDL	
	GESY	
	INRC	
	INRJ	
	MOTA	♦SAR
	SEN	
	SET	
	SSI	
	TEC	
1N1205A	♦△GESY	342 -106
	BRA	
	EDL	
	ETC	
	INRB	
	INRI	
	ITT	
	♦RCA	
	SCN	
	SOD	
	SYN	
	TNC	
1N1205B	BRA	342 -107
	EDL	
	ETC	
	INRB	
	INRI	
	ITT	
	SCN	
	SOD	
	TEC	
	TUNL	
1N1206	△WESY	351 - 74
	AMD	
	EDL	
	GESY	
	INRC	
	INRJ	
	MOTA	♦SAR
	SEN	
	SET	
	SSI	
	TEC	
1N1206A	♦△GESY	351 - 75
	BRA	
	EDL	
	ETC	
	INRB	
	INRI	
	ITT	
	♦RCA	
	SCN	
	SOD	
	SYN	
	TNC	
	TUNL	
	WESY	
JAN1N1206A,RA	GESY	351 - 76
	INRC	
	TRW	
1N1206B	BRA	351 - 77
	EDL	
	ETC	
	INRB	
	INRI	
	ITT	
	SCN	
	SOD	
	TEC	
	TUNL	
1N1217	BRA	295 - 1
	ETC	
	GIC	
	INRB	
	INRI	
	ITT	
	SCN	
	TEC	
1N1217A	BRA	295 - 6
	ETC	
	IDC	
	INRC	
	INRJ	
	SAR	
	SES	
1N1217B	ETC	295 - 4
	IDC	
	INRC	
	INRJ	
1N1218	BRA	302 - 21
	ETC	
	GIC	
	INRB	
	INRI	
	ITT	
	SCN	
	TEC	
1N1218A	BRA	302 - 26
	ETC	
	GIC	
	IDC	
	INRB	
	INRC	
	INRI	
	INRJ	
	ITT	
	SAR	
	SCN	
	SES	
	TEC	
	UPI	
1N1218B	ETC	302 - 23
	IDC	
	INRB	
	INRC	
	INRI	
	INRJ	
	SCN	
	UPI	
1N1219	BRA	307 - 97
	ETC	
	GELC	
	GIC	
	IDC	
	INRB	
	INRC	
	INRI	
	INRJ	
	ITT	
	SAR	
	SCN	
	SES	
	TEC	
	UPI	
1N1219A	BRA	307 -102
	ETC	
	GIC	
	IDC	
	INRB	
	INRC	
	INRI	
	INRJ	
	ITT	
	SAR	
	SCN	
	SES	
	TEC	
	UPI	
1N1219B	ETC	307 - 99
	IDC	
	INRB	
	INRC	
	INRI	
	INRJ	
	SCN	
	UPI	
1N1220	BRA	313 - 22
	ETC	
	GELC	
	GIC	
	IDC	
	INRB	
	INRC	
	INRI	
	INRJ	
	ITT	
	SAR	
	SCN	
	SES	
	TEC	
	UPI	
1N1220A	BRA	313 - 27
	ETC	
	GIC	
	IDC	
	INRB	
	INRC	
	INRI	
	INRJ	
	ITT	
	SAR	
	SCN	
	SES	
	TEC	
	UPI	
1N1220B	ETC	313 - 24
	IDC	
	INRB	
	INRC	
	INRI	
	INRJ	
	SCN	
	UPI	
1N1221	BRA	322 - 83
	ETC	
	GELC	
	GIC	
	IDC	
	INRB	
	INRC	
	INRI	
	INRJ	
	ITT	
	SAR	
	SCN	
	SES	
	TEC	
	UPI	
1N1221A	BRA	322 - 88
	ETC	
	GIC	
	IDC	
	INRB	
	INRC	
	INRI	
	INRJ	
	ITT	
	SAR	
	SCN	
	SES	
	TEC	
	UPI	
1N1221B	ETC	322 - 85
	INRB	
	INRC	
	INRI	
	INRJ	
	SCN	
	UPI	
1N1222	BRA	332 - 9
	ETC	
	GELC	
	GIC	
	IDC	
	INRB	
	INRC	
	INRI	
	INRJ	
	ITT	
	SAR	
	SCN	
	SES	
	TEC	
	UPI	
1N1222A	BRA	332 - 14
	ETC	
	GIC	
	IDC	
	INRB	
	INRC	
	INRI	
	INRJ	
	ITT	
	SAR	
	SCN	
	SES	
	TEC	
	UPI	
1N1222B	ETC	332 - 11
	IDC	
	INRB	
	INRC	
	INRI	
	INRJ	
	SCN	
	UPI	
1N1223	BRA	341 - 46
	ETC	
	GELC	
	GIC	
	IDC	
	INRB	
	INRC	
	INRI	
	INRJ	
	ITT	
	SAR	
	SCN	
	SES	
	TEC	
1N1223A	BRA	341 - 51
	ETC	
	GIC	
	IDC	
	INRB	
	INRC	
	INRI	
	INRJ	
	ITT	
	SAR	
	SCN	
	SES	
	TEC	
1N1223B	ETC	341 - 48
	IDC	
	INRB	

cont next page

△-Registered with JEDEC by this manufacturer

♦-Copy of mfr's data sheet may be ordered from D.A.T.A.

1. TYPE No. CROSS INDEX

IN TYPE NUMBER SEQUENCE

TYPE No.	MFRS	Pg&Line
1N1223B		
(cont)	INRC	
INRI	INRJ	
	SCN	
1N1224	BRA	349 - 29
ETC	GELC	
GIC	IDC	
INRB	INRC	
INRI	INRJ	
ITT	SAR	
SCN	SES	
	TEC	
1N1224A	BRA	349 - 34
ETC	GIC	
IDC	INRB	
INRC	INRI	
INRJ	ITT	
SAR	SCN	
SES	TEC	
1N1224B	ETC	349 - 31
IDC	INRB	
INRC	INRI	
INRJ	SCN	
1N1225	BRA	356 - 23
ETC	GIC	
IDC	INRB	
INRC	INRI	
INRJ	SAR	
SCN	SES	
	TEC	
1N1225A	ETC	355 - 96
IDC	INRB	
INRC	INRI	
INRJ	SCN	
	TEC	
1N1225B	ETC	356 - 25
IDC	INRB	
INRC	INRI	
INRJ	SCN	
1N1226	BRA	361 - 98
ETC	GIC	
IDC	INRB	
INRC	INRI	
INRJ	SAR	
SCN	SES	
	TEC	
1N1226A	ETC	360 - 44
IDC	INRB	
INRC	INRI	
INRJ	SCN	
	TEC	
1N1226B	ETC	361-100
IDC	INRB	
INRC	INRI	
INRJ	SCN	
1N1227	BRA	295 - 2
IDC	INRB	
INRC	INRI	
INRJ	ITT	
SCN	SES	
	TEC	
1N1227A	BRA	295 - 3
IDC	ITT	
SCN	SES	
	TEC	
1N1227B	EDL	294-110
IDC	SCN	
1N1228	BRA	302 - 22
EDL	INRB	
INRC	INRI	
INRJ	ITT	
SCN	SES	
SSI	TEC	
1N1228A	BRA	302 - 24
EDL	ITT	
SCN	SES	
SSI	TEC	
1N1228B	EDL	302 - 19
	SCN	
1N1229	BRA	307 - 98
EDL	INRB	
INRC	INRI	
INRJ	ITT	
SCN	SES	
	TEC	
1N1229A	BRA	307-100
EDL	ITT	
SCN	SES	
	TEC	
1N1229B	EDL	307 - 96
	SCN	
1N1230	BRA	313 - 23
EDL	INRB	
INRC	INRI	
INRJ	ITT	
SCN	SES	
	TEC	
1N1230A	BRA	313 - 25
EDL	ITT	
SCN	SES	
	TEC	
1N1230B	EDL	313 - 20
	SCN	
1N1231	BRA	322 - 84
EDL	INRB	
INRC	INRI	
INRJ	ITT	
SCN	SES	
	TEC	
1N1231A	BRA	322 - 86
EDL	ITT	
	SCN	
	SES	
	TEC	
	TNC	

TYPE No.	MFRS	Pg&Line
1N1231B	EDL	322 - 81
	SCN	
1N1232	BRA	332 - 10
EDL	INRB	
INRC	INRI	
INRJ	ITT	
SCN	SES	
	TEC	
1N1232A	BRA	332 - 12
EDL	ITT	
SCN	SES	
	TEC	
1N1232B	EDL	332 - 7
	SCN	
1N1233	BRA	341 - 47
EDL	INRB	
INRC	INRI	
INRJ	ITT	
SCN	SES	
SSI	TEC	
1N1233A	BRA	341 - 49
EDL	ITT	
SCN	SES	
SSI	TEC	
1N1233B	EDL	341 - 44
SCN	SSI	
1N1234	BRA	349 - 30
EDL	INRB	
INRC	INRI	
INRJ	ITT	
SCN	SES	
SSI	TEC	
1N1234A	BRA	349 - 32
EDL	ITT	
SCN	SES	
SSI	TEC	
1N1234B	EDL	349 - 27
SCN	SSI	
1N1235	BRA	356 - 24
EDL	INRB	
INRC	INRI	
INRJ	ITT	
SCN	SES	
SSI	TEC	
1N1235A	EDL	356 - 20
SCN	SSI	
1N1235B	EDL	356 - 21
SCN	SSI	
1N1236	BRA	361 - 99
EDL	INRB	
INRC	INRI	
INRJ	ITT	
SCN	SES	
SSI	TEC	
1N1236A	EDL	361 - 95
SCN	SSI	
1N1236B	EDL	361 - 96
SCN	SSI	
1N1237	△SAR	386 - 17
CODI	EDI	
EDL	GIC	
GICC	INRB	
INRC	INRI	
INRJ	ITT	
♦SCN	SOD	
SOIF	SSI	
1N1238	△SAR	386 - 18
CODI	EDI	
EDL	GIC	
GICC	INRB	
INRC	INRI	
INRJ	ITT	
♦SCN	SOD	
SOIF	SSI	
1N1239	△SAR	393 - 27
BRA	CODI	
EDI	EDL	
GIC	GICC	
INRB	INRC	
INRI	INRJ	
ITT	♦SCN	
SOD	SOIF	
	SSI	
1N1251	ETC	293 - 20
IDC	ITT	
SCN	SSI	
	TEC	
1N1252	ETC	299 - 50
IDC	ITT	
SCN	SSI	
	TEC	
1N1253	ETC	310 - 12
ITT	SCN	
SSI	TEC	
	UPI	
1N1254	ETC	320 - 74
ITT	SCN	
SSI	TEC	
1N1255	ETC	328 - 79
ITT	SCN	
SSI	TEC	
	UPI	
1N1255A	SCN	328 - 80
SSI	UPI	
1N1256	ETC	339 - 25
ITT	SCN	
SSI	TEC	
1N1257	ETC	346 - 4
ITT	SCN	
SSI	TEC	
1N1258	ETC	355 - 15
ITT	SCN	
SSI	TEC	

TYPE No.	MFRS	Pg&Line
1N1259	ETC	359 - 24
ITT	SCN	
SSI	TEC	
1N1260	ETC	366-106
ITT	SCN	
SSI	TEC	
1N1261	ETC	369 - 71
ITT	SCN	
SSI	TEC	
1N1262	△SAR	398 - 24
EDI	EDL	
GICC	INRB	
INRC	INRI	
INRJ	♦SCN	
SOD	SSI	
1N1281	△WESY	297 - 92
ETC	SSI	
1N1282	△WESY	306 - 32
ETC	SSI	
1N1283	△WESY	308 - 93
ETC	SSI	
1N1284	△WESY	317 - 91
ETC	SSI	
1N1285	△WESY	326 - 17
ETC	SSI	
1N1286	△WESY	337 - 15
ETC	SSI	
1N1287	△WESY	344 - 55
	SSI	
1N1291	△WESY	297 - 93
	SSI	
1N1292	△WESY	306 - 33
	SSI	
1N1293	△WESY	308 - 94
	SSI	
1N1294	△WESY	317 - 92
	SSI	
1N1295	△WESY	326 - 18
	SSI	
1N1296	△WESY	337 - 16
	SSI	
1N1297	△WESY	344 - 56
	SSI	
1N1301	EDL	297 - 47
ETC	IDC	
SOD	SSI	
SYN	TEC	
1N1302	EDL	305 - 49
ETC	IDC	
SOD	SSI	
SYN	TEC	
1N1304	EDL	316 - 91
ETC	IDC	
SOD	SSI	
SYN	TEC	
1N1306	EDL	325 - 31
ETC	IDC	
SOD	SSI	
SYN	TEC	
1N1313,A	♦△CRL	184 - 61
BNT	CODI	
♦DIC	GSE	
INRB	INRC	
INRI	INRJ	
MOTA	MSC	
SCA	SDI	
SEN	SSI	
TRW	TSC	
USS	WSI	
1N1314,A	♦△CRL	189-109
BNT	CODI	
♦DIC	GSE	
IDC	INRB	
INRC	INRI	
INRJ	MOTA	
MSC	SCA	
SDI	SEN	
SSI	TRW	
TSC	USS	
	WSI	
1N1315,A	♦△CRL	194 - 7
BNT	CODI	
♦DIC	GSE	
INRB	INRC	
INRI	INRJ	
MOTA	MSC	
SCA	SDI	
SEN	SSI	
TRW	TSC	
USS	WSI	
1N1316,A	♦△CRL	198-201
BNT	CODI	
♦DIC	GSE	
INRB	INRC	
INRI	INRJ	
MOTA	MSC	
SCA	SDI	
SEN	SSI	
TRW	TSC	
USS	WSI	
1N1317,A	♦△CRL	203-101
BNT	CODI	
♦DIC	GSE	
INRB	INRC	
INRI	INRJ	
MOTA	MSC	
SCA	SDI	
SEN	SSI	
TRW	TSC	
USS	WSI	
1N1318,A	♦△CRL	208 - 29
BNT	CODI	
♦DIC	GSE	
cont next col		

TYPE No.	MFRS	Pg&Line
1N1318,A		
(cont)	INRB	
INRC	INRI	
INRJ	MOTA	
MSC	SCA	
SDI	SEN	
SSI	TRW	
TSC	USS	
	WSI	
1N1319,A	♦△CRL	212-132
BNT	CODI	
♦DIC	GSE	
INRB	INRC	
INRI	INRJ	
MOTA	MSC	
SCA	SDI	
SEN	SSI	
TRW	TSC	
USS	WSI	
1N1320,A	♦△CRL	216 - 47
CODI	♦DIC	
GSE	INRB	
INRC	INRI	
INRJ	MOTA	
MSC	SCA	
SDI	SEN	
SSI	TRW	
TSC	USS	
	WSI	
1N1321,A	♦△CRL	219 - 26
CODI	♦DIC	
GSE	MOTA	
MSC	SCA	
SDI	SEN	
SSI	TRW	
TSC	USS	
	WSI	
1N1322,A	♦△CRL	222 - 40
CODI	♦DIC	
GSE	MOTA	
MSC	SCA	
SDI	SEN	
SSI	TRW	
TSC	USS	
	WSI	
1N1323,A	♦△CRL	225 - 85
CODI	♦DIC	
GSE	MOTA	
MSC	SCA	
SDI	SEN	
SSI	TRW	
TSC	USS	
	WSI	
1N1324	♦△CRL	228-103
CODI	♦DIC	
GSE	IDC	
MOTA	MSC	
SDI	SEN	
SSI	TRW	
TSC	USS	
	WSI	
1N1324A	CODI	228-104
♦DIC	GSE	
IDC	MOTA	
MSC	SDI	
SEN	SSI	
TRW	TSC	
USS	WSI	
1N1325	♦△CRL	231 - 74
CODI	♦DIC	
GSE	MOTA	
MSC	SDI	
SEN	SSI	
TRW	USS	
	WSI	
1N1325A	CODI	231 - 75
♦DIC	GSE	
MOTA	MSC	
SDI	SEN	
SSI	TRW	
USS	WSI	
1N1326	♦△CRL	234 - 61
CODI	♦DIC	
GSE	MOTA	
MSC	SDI	
SEN	SSI	
TRW	USS	
	WSI	
1N1326A	CODI	234 - 62
♦DIC	GSE	
MOTA	MSC	
SDI	SEN	
SSI	TRW	
USS	WSI	
1N1327	♦△CRL	237 - 41
CODI	♦DIC	
GSE	MOTA	
MSC	SEN	
SSI	TRW	
USS	WSI	
1N1327A	CODI	237 - 42
♦DIC	GSE	
MOTA	MSC	
SEN	SSI	
TRW	USS	
	WSI	
1N1330	INRB	298 - 1
INRC	INRI	
INRJ	SSI	
1N1331	INRB	306 - 55
INRC	INRI	
INRJ	SSI	
1N1332	INRB	308-109
cont next col		

TYPE No.	MFRS	Pg&Line
1N1332		
(cont)	INRC	
INRI	INRJ	
	SSI	
1N1333	INRB	318 - 5
INRC	INRI	
INRJ	SSI	
1N1334	INRB	326 - 40
INRC	INRI	
INRJ	SSI	
1N1335	INRB	337 - 43
INRC	INRI	
INRJ	SSI	
1N1336	INRB	344 - 77
INRC	INRI	
INRJ	SSI	
1N1341	△WESY	296 - 8
AMD	BRA	
EDI	EDL	
ETC	GESY	
IDC	INRB	
INRC	INRI	
INRJ	ITT	
MOTA	SAR	
SCN	SEN	
SES	SET	
SOD	SSI	
SYN	TEC	
	TNC	
1N1341A	△GESY	296 - 9
BRA	EDI	
EDL	ETC	
IDC	INRB	
INRC	INRI	
INRJ	ITT	
MOTA	SAR	
SCN	SEN	
SES	SOD	
SSI	SYN	
TEC	TNC	
UPI	WESY	
1N1341B	BRA	296 - 10
EDI	EDL	
ETC	IDC	
INRB	INRC	
INRI	INRJ	
ITT	MOTA	
♦RCA	SCN	
SEN	SES	
SOD	SOIF	
SSI	SYN	
TEC	TNC	
TUNL	UPI	
1N1342	△WESY	303 - 74
AMD	BRA	
EDI	EDL	
ETC	GESY	
INRB	INRC	
INRI	INRJ	
ITT	MOTA	
SAR	SCN	
SEN	SES	
SET	SOD	
SSI	SYN	
TEC	TNC	
1N1342A	△GESY	303 - 75
BRA	EDI	
EDL	ETC	
IDC	INRB	
INRC	INRI	
INRJ	ITT	
MOTA	SAR	
SCN	SEN	
SES	SOD	
SSI	SYN	
TEC	TNC	
UPI	WESY	
1N1342B	BRA	303 - 76
EDI	EDL	
ETC	IDC	
INRB	INRC	
INRI	INRJ	
ITT	MOTA	
♦RCA	SCN	
SEN	SES	
SOD	SOIF	
SSI	SYN	
TEC	TNC	
TUNL	UPI	
1N1343	△WESY	308 - 7
AMD	BRA	
EDI	EDL	
ETC	GESY	
INRB	INRC	
INRI	INRJ	
ITT	MOTA	
SAR	SCN	
SEN	SES	
SET	SOD	
SSI	SYN	
TEC	TNC	
1N1343A	△GESY	308 - 8
BRA	EDI	
EDL	ETC	
IDC	INRB	
INRC	INRI	
INRJ	ITT	
MOTA	SAR	
SCN	SEN	
SES	SOD	
SSI	SYN	
TEC	TNC	
UPI	WESY	

△-Registered with JEDEC by this manufacturer

♦-Copy of mfr's data sheet may be ordered from D.A.T.A.

1. TYPE No. CROSS INDEX

IN TYPE NUMBER SEQUENCE

TYPE No.	MFRS	Pg&Line
1N1343B	BRA	308- 9
	EDI	
	ETC	
	INRB	
	INRI	
	ITT	
	SCN	
	SES	
	SSI	
	TEC	
1N1344	△WESY	314- 94
	AMD	
	EDI	
	ETC	
	INRB	
	INRI	
	ITT	
	SAR	
	SEN	
	SET	
	SSI	
	TEC	
1N1344A	△GESY	314- 95
	BRA	
	EDL	
	IDC	
	INRC	
	INRJ	
	MOTA	
	SCN	
	SES	
	SSI	
	TEC	
1N1344B	BRA	314- 96
	EDI	
	ETC	
	INRB	
	INRI	
	ITT	
	♦RCA	
	SEN	
	SOD	
	SSI	
	TEC	
1N1345	△WESY	323-107
	AMD	
	EDI	
	ETC	
	INRB	
	INRI	
	ITT	
	SAR	
	SEN	
	SET	
	SSI	
	TEC	
1N1345A	△GESY	323-108
	BRA	
	EDL	
	IDC	
	INRC	
	INRJ	
	MOTA	
	SCN	
	SES	
	SSI	
	TEC	
	UPI	
1N1345B	BRA	323-109
	EDI	
	ETC	
	INRC	
	INRJ	
	MOTA	♦RCA
	SCN	
	SES	
	SOIF	
	SYN	
	TNC	
1N1346	△WESY	333- 87
	AMD	
	EDI	
	ETC	
	INRB	
	INRI	
	ITT	
	SAR	
	SEN	
	SET	
	SSI	
	TEC	
1N1346A	△GESY	333- 88
	BRA	
	EDL	
	IDC	
	INRC	
	INRJ	
	MOTA	
	SCN	
	SES	
	SSI	
	TEC	
	UPI	
1N1346B	BRA	333- 89
	EDI	
	ETC	
	INRB	
	INRI	
	ITT	
cont.next col		

TYPE No.	MFRS	Pg&Line
1N1346B		
(cont)	♦RCA	
	SCN	
	SES	
	SOIF	
	SYN	
	TNC	
1N1347	△WESY	342- 52
	AMD	
	EDI	
	ETC	
	INRB	
	INRI	
	ITT	
	SAR	
	SEN	
	SET	
	SSI	
	TEC	
1N1347A	△GESY	342- 53
	BRA	
	EDL	
	IDC	
	INRC	
	INRJ	
	MOTA	
	SCN	
	SES	
	SSI	
	TEC	
1N1347B	BRA	342- 54
	EDI	
	ETC	
	INRB	
	INRI	
	ITT	
	♦RCA	
	SEN	
	SOD	
	SSI	
	TEC	
1N1348	△WESY	350-103
	AMD	
	EDI	
	ETC	
	INRB	
	INRC	
	INRJ	
	MOTA	
	SCN	
	SES	
	SOD	
	SYN	
1N1348A	△GESY	350-104
	BRA	
	EDL	
	IDC	
	INRC	
	INRJ	
	MOTA	
	SCN	
	SES	
	SSI	
	TEC	
1N1348B	BRA	350-105
	EDI	
	ETC	
	INRB	
	INRI	
	ITT	
	♦RCA	
	SEN	
	SOD	
	SSI	
	TEC	
1N1351,A	ASC	189- 41
	♦DIC	
	ESP	
	GSE	
	INRB	
	INRI	
	ITT	
	MULB	
	SAR	
	SDI	
	SSI	
	TEK	
	TRW	♦USS
1N1351B	IDC	189- 42
	SAR	SSI
1N1351C,CA	♦DIC	189- 43
1N1352,A	ASC	191- 21
	♦DIC	
	ESP	
	GSE	
	INRB	
	INRI	
	ITT	
	MULB	
	SAR	
	SDI	
	SSI	
	TEK	
	TRW	♦USS
1N1352B	IDC	191- 22
	SAR	SSI
1N1352C,CA	♦DIC	191- 23

TYPE No.	MFRS	Pg&Line
1N1353,A	ASC	193-131
	♦DIC	
	ESP	
	GSE	
	INRB	
	INRI	
	ITT	
	MULB	
	SAR	
	SDI	
	SSI	
	TEK	
	TRW	♦USS
1N1353B	IDC	193-132
	SAR	SSI
1N1353C,CA	♦DIC	193-133
1N1354,A	ASC	195-154
	♦DIC	
	ESP	
	GSE	
	INRB	
	INRI	
	ITT	
	MULB	
	SAR	
	SDI	
	SSI	
	TEK	
	TRW	♦USS
1N1354B	IDC	195-155
	SAR	SSI
1N1354C,CA	♦DIC	195-156
1N1355,A	ASC	198-132
	♦DIC	
	ESP	
	GSE	
	INRB	
	INRI	
	ITT	
	MULB	
	SAR	
	SDI	
	SSI	
	TEK	
	TRW	♦USS
1N1355B	IDC	198-133
	SAR	SSI
1N1355C,CA	♦DIC	198-134
1N1356,A	ASC	200- 93
	♦DIC	
	ESP	
	GSE	
	INRB	
	INRI	
	ITT	
	MULB	
	SAR	
	SDI	
	SSI	
	TEK	
	TRW	♦USS
1N1356B	IDC	200- 94
	SAR	SSI
1N1356C,CA	♦DIC	200- 95
1N1357,A	ASC	203- 24
	♦DIC	
	ESP	
	GSE	
	INRB	
	INRI	
	ITT	
	MULB	
	SAR	
	SDI	
	SSI	
	TEK	
	TRW	♦USS
1N1357B	IDC	203- 25
	SAR	SSI
1N1357C,CA	♦DIC	203- 26
1N1358,A	ASC	205-160
	♦DIC	
	ESP	
	GSE	
	INRB	
	INRI	
	ITT	
	MULB	
	SAR	
	SDI	
	SSI	
	TEK	
	TRW	♦USS
1N1358B	SAR	205-161
	SSI	
1N1358C,CA	♦DIC	205-162
1N1359,A	ASC	207-147
	♦DIC	
	ESP	
	GSE	
	INRB	
	INRI	
	ITT	
	MULB	
	SAR	
	SDI	
	SSI	
	TEK	
	TRW	♦USS
1N1359B	IDC	207-148
	SAR	SSI
1N1359C,CA	♦DIC	207-149
1N1360,A	ASC	209-121
cont.next col.		

TYPE No.	MFRS	Pg&Line
1N1360,A		
(cont)	♦DIC	
	EDI	
	ETC	
	IDC	
	INRC	
	INRJ	
	MOTA	
	PWC	
	SCN	
	SOD	
	TEC	
	TNC	
	♦USS	
1N1360B	IDC	209-122
	SAR	SSI
1N1360C,CA	♦DIC	209-123
1N1361,A	ASC	212- 18
	♦DIC	
	ESP	
	GSE	
	INRB	
	INRI	
	ITT	
	MULB	
	SAR	
	SDI	
	SSI	
	TEK	
	TRW	♦USS
1N1361B	IDC	212- 19
	SAR	SSI
1N1361C,CA	♦DIC	212- 20
1N1362,A	ASC	214- 21
	♦DIC	
	ESP	
	GSE	
	INRB	
	INRI	
	ITT	
	MULB	
	SAR	
	SDI	
	SSI	
	TEK	
	TRW	♦USS
1N1362B	IDC	214- 22
	SAR	SSI
1N1362C,CA	♦DIC	214- 23
1N1363,A	ASC	215-178
	♦DIC	
	ESP	
	GSE	
	INRB	
	INRI	
	ITT	
	MULB	
	SAR	
	SDI	
	SSI	
	TEK	
	TRW	♦USS
1N1363B	IDC	215-179
	SAR	SSI
1N1363C,CA	♦DIC	215-180
1N1364,A	ASC	217- 70
	♦DIC	
	ESP	
	GSE	
	INRB	
	INRI	
	ITT	
	MULB	
	SAR	
	SDI	
	SSI	
	TEK	
	TRW	♦USS
1N1364B	IDC	217- 71
	SAR	SSI
1N1364C,CA	♦DIC	217- 72
1N1365,A	ASC	218-140
	♦DIC	
	ESP	
	GSE	
	INRB	
	INRI	
	ITT	
	MULB	
	SAR	
	SDI	
	SSI	
	TEK	
	TRW	♦USS
1N1365B	IDC	218-141
	SAR	SSI
1N1365C,CA	♦DIC	218-142
1N1366,A	ASC	220- 31
	♦DIC	
	ESP	
	GSE	
	INRB	
	INRI	
	ITT	
	MULB	
	SAR	
	SDI	
	SSI	
	TEK	
	TRW	♦USS
1N1366B	IDC	220- 32
	SAR	SSI
1N1366C,CA	♦DIC	220- 33

TYPE No.	MFRS	Pg&Line
1N1367,A	ASC	221-163
	♦DIC	
	ESP	
	GSE	
	INRB	
	INRI	
	ITT	
	MULB	
	SAR	
	SDI	
	SSI	
	TEK	
	TRW	♦USS
1N1367B	IDC	221-164
	SAR	SSI
1N1367C,CA	♦DIC	221-165
1N1368,A	ASC	223-102
	♦DIC	
	ESP	
	GSE	
	INRB	
	INRI	
	ITT	
	MULB	
	SAR	
	SDI	
	SSI	
	TEK	
	TRW	♦USS
1N1368B	IDC	223-103
	SAR	SSI
1N1368C,CA	♦DIC	223-104
1N1369,A	ASC	225- 20
	♦DIC	
	ESP	
	GSE	
	INRB	
	INRI	
	ITT	
	MULB	
	SAR	
	SDI	
	SSI	
	TEK	
		♦USS
1N1369B	IDC	225- 21
	SAR	SSI
1N1369C,CA	♦DIC	225- 22
1N1370,A	ASC	226-134
	♦DIC	
	ESP	
	GSE	
	INRB	
	INRI	
	ITT	
	MULB	
	SAR	
	SDI	
	SSI	
	TEK	
		♦USS
1N1370B	IDC	226-135
	SAR	SSI
1N1370C,CA	♦DIC	226-136
1N1371,A	ASC	228- 16
	♦DIC	
	ESP	
	GSE	
	INRB	
	INRI	
	ITT	
	MULB	
	SAR	
	SDI	
	SSI	
	TEK	
		♦USS
1N1371B	IDC	228- 17
	SAR	SSI
1N1371C,CA	♦DIC	228- 18
1N1372,A	ASC	229-118
	♦DIC	
	ESP	
	GSE	
	INRB	
	INRI	
	ITT	
	MULB	
	SAR	
	SDI	
	SSI	
	TEK	
		♦USS
1N1372B	IDC	229-119
	SAR	SSI
1N1372C,CA	♦DIC	229-120
1N1373,A	ASC	231- 6
	♦DIC	
	ESP	
	GSE	
	INRB	
	INRI	
	ITT	
	PWC	SAR
	SCN	SDI
	SOD	SSI
	TEC	TEK
	TNC	♦USS
1N1373B	IDC	231- 7
	SAR	SSI
1N1373C,CA	♦DIC	231- 8
1N1374,A	ASC	232-118
	♦DIC	EDI
cont.next page		

△-Registered with JEDEC by this manufacturer

♦-Copy of mfr's data sheet may be ordered from D.A.T.A.

1. TYPE No. CROSS INDEX

IN TYPE NUMBER SEQUENCE

TYPE No.	MFRS	Pg&Line
1N1374,A (cont.)	ESP	
ETC	GSE	
IDC	INRB	
INRC	INRI	
INRJ	ITT	
MOTA	PWC	
SAR	SCN	
SDI	SOD	
SSI	TEC	
TEK	TNC	
	♦USS	
1N1374B	IDC	232-119
SAR	SSI	
1N1374C,CA	♦DIC	232-120
1N1375,A	ASC	234- 8
♦DIC	EDI	
ESP	ETC	
GSE	IDC	
INRB	INRC	
INRI	INRJ	
ITT	MOTA	
PWC	SAR	
SCN	SDI	
SOD	SSI	
TEC	TEK	
TNC	♦USS	
1N1375C,CA	♦DIC	234- 9
1N1376	ETC	298- 2
INRB	INRC	
INRI	INRJ	
	SSI	
1N1377	ETC	306- 56
INRB	INRC	
INRI	INRJ	
	SSI	
1N1378	ETC	308-110
INRB	INRC	
INRI	INRJ	
	SSI	
1N1379	ETC	318- 6
INRB	INRC	
INRI	INRJ	
	SSI	
1N1380	ETC	326- 41
INRB	INRC	
INRI	INRJ	
	SSI	
1N1381	ETC	337- 44
INRB	INRC	
INRI	INRJ	
	SSI	
1N1382	INRB	344- 78
INRC	INRI	
INRJ	SSI	
1N1396	EDL	297- 71
ITT	SSI	
SYN	♦TUNL	
1N1397	EDL	305- 92
ITT	SSI	
SYN	♦TUNL	
1N1398	EDL	308- 71
ITT	SSI	
SYN	♦TUNL	
1N1399	EDL	317- 35
ITT	SSI	
SYN	♦TUNL	
1N1400	EDL	325- 76
ITT	SSI	
SYN	♦TUNL	
1N1401	EDL	336- 57
ITT	SSI	
SYN	♦TUNL	
1N1402	EDL	344- 5
ITT	SSI	
SYN	♦TUNL	
1N1403	EDL	353- 28
ITT	SSI	
SYN	♦TUNL	
1N1406	ΔINRC	345- 84
BRA	CODI	
ETC	INRB	
INRI	INRJ	
ITT	SSI	
TEC	WSI	
1N1407	ΔINRC	359- 1
BRA	CODI	
ETC	INRB	
INRI	INRJ	
ITT	SCN	
SSI	TEC	
	WSI	
1N1408	ΔINRC	369- 43
BRA	CODI	
ETC	INRB	
INRI	INRJ	
ITT	SCN	
SSI	TEC	
	WSI	
1N1409	BRA	377- 54
CODI	ITT	
SCN	SCO	
SSI	WSI	
1N1410	BRA	384- 14
CODI	ITT	
SCN	SCO	
SSI	WSI	
1N1411	BRA	388- 5
CODI	ITT	
SCN	SCO	
	SSI	
1N1412	BRA	389- 61
CODI	ITT	

cont next col

TYPE No.	MFRS	Pg&Line
1N1412 (cont.)	SCN	
SCO	SSI	
1N1413	BRA	391- 68
CODI	ITT	
SCN	SCO	
	SSI	
1N1415	IDC	330- 35
SSI	UPI	
1N1416	SSI	183- 26
1N1417	SSI	193-134
1N1418	SSI	198-135
1N1419	SSI	203- 27
1N1420	IDC	207-150
	SSI	
1N1421	SSI	212- 21
1N1422	SSI	228- 19
1N1423	SSI	234- 10
1N1424	SSI	240- 6
1N1425	IDC	182- 59
	SSI	
1N1426	SSI	192-134
1N1428	SSI	202- 59
1N1429	SSI	206-171
1N1430	SSI	211- 52
1N1431	SSI	227- 86
1N1432	SSI	233- 61
1N1433	SSI	239- 70
1N1434	EDL	297- 32
ETC	ITT	
SES	SSI	
SYN	TEC	
	TUNL	
1N1435	EDL	305- 27
ETC	ITT	
SES	SSI	
SYN	TEC	
	TUNL	
1N1436	EDL	316- 69
ETC	ITT	
SES	SSI	
SYN	TEC	
	TUNL	
1N1437	EDL	335- 72
ETC	ITT	
SES	SSI	
SYN	TEC	
	TUNL	
1N1438	EDL	352- 61
ITT	SES	
SSI	SYN	
TEC	TUNL	
1N1440	ETC	311- 20
1N1441	ETC	321- 47
IDC	UPI	
1N1443	BRA	372- 15
ETC	IDC	
INRB	INRC	
INRI	INRJ	
ITT	SCN	
SES	SSI	
	TEC	
1N1443A	ETC	370- 86
INRB	INRC	
INRI	INRJ	
SCN	SSI	
1N1443B	SCN	372- 16
1N1444	BRA	372- 17
ITT	SCN	
SES	SSI	
	TEC	
1N1444A	SCN	372- 12
	SSI	
1N1444B	SCN	372- 13
	SSI	
1N1446	AMD	302- 17
	SCN	
1N1447	AMD	313- 19
	SCN	
1N1448	AMD	322- 79
	SCN	
1N1449	AMD	332- 6
	SCN	
1N1450	AMD	302- 13
	SCN	
1N1451	AMD	313- 15
	SCN	
1N1452	AMD	322- 76
	SCN	
1N1453	AMD	332- 2
	SCN	
1N1454	AMD	305- 1
	SSI	
1N1455	AMD	316- 35
	SSI	
1N1456	AMD	325- 1
	SSI	
1N1457	AMD	335- 41
	SSI	
1N1458	AMD	305- 37
	SSI	
1N1459	AMD	316- 80
	SSI	
1N1460	AMD	325- 23
	SSI	
1N1461	AMD	335- 83
	SSI	
1N1462	AMD	305- 64
	SSI	
1N1463	AMD	317- 2
	SSI	
1N1464	AMD	325- 48
	SSI	

TYPE No.	MFRS	Pg&Line
1N1465	AMD	336- 22
	SSI	
1N1466	AMD	305- 98
	SSI	
1N1467	AMD	317- 41
	SSI	
1N1468	AMD	325- 81
	SSI	
1N1469	AMD	336- 62
	SSI	
1N1470	AMD	305-104
	SSI	
1N1471	AMD	317- 48
	SSI	
1N1472	AMD	325- 85
	SSI	
1N1473	AMD	336- 71
	SSI	
1N1474	AMD	306- 16
	SSI	
1N1475	AMD	317- 75
	SSI	
1N1476	AMD	326- 2
	SSI	
1N1477	AMD	336-104
	SSI	
1N1478	AMD	306- 38
	SSI	
1N1479	AMD	318- 62
	SSI	
1N1480	AMD	325- 35
	SSI	
1N1481	AMD	338- 2
	SSI	
1N1482	SSI	171- 19
1N1483	IDC	175-111
	SSI	
1N1484	IDC	170-154
MSC	SSI	
1N1485	IDC	175- 38
MSC	SSI	
1N1486	BRA	340- 28
ETC	GIC	
GICC	ITT	
SCN	SSI	
	TEC	
1N1487	BRA	299-106
ETC	GELC	
GIC	GICC	
IDC	INRB	
INRC	INRI	
INRJ	ITT	
SAR	SCN	
TEC	TII	
TIID	TIIF	
1N1488	BRA	310- 76
ETC	GELC	
GIC	GICC	
IDC	INRB	
INRC	INRI	
INRJ	ITT	
SAR	SCN	
TEC	TII	
TIID	TIIF	
	UPI	
1N1489	BRA	321- 5
ETC	GELC	
GIC	GICC	
IDC	INRB	
INRC	INRI	
INRJ	ITT	
SAR	SCN	
TEC	TII	
TIID	TIIF	
	UPI	
1N1490	BRA	329- 46
ETC	GELC	
GIC	GICC	
IDC	INRB	
INRC	INRI	
INRJ	ITT	
SAR	SCN	
TEC	TII	
TIID	TIIF	
	UPI	
1N1491	ΔGESY	339- 90
BRA	ETC	
GELC	GIC	
GICC	IDC	
INRB	INRC	
INRI	INRJ	
ITT	SAR	
SCN	TEC	
TII	TIID	
	TIIF	
1N1492	BRA	346- 82
ETC	GELC	
GIC	GICC	
IDC	INRB	
INRC	INRI	
INRJ	ITT	
SAR	SCN	
TEC	TII	
TIID	TIIF	
1N1507	ΔINRC	168-145
CODI	♦DIC	
GSE	IDC	
INRB	INRI	
INRJ	ITT	
MOTA	SSI	
TNC	TRW	
	WSI	
1N1507A	ΔINRC	168-146

cont next col

TYPE No.	MFRS	Pg&Line
1N1507A (cont.)	CODI	
♦DIC	GSE	
IDC	INRB	
INRI	INRJ	
ITT	MOTA	
SSI	TNC	
TRW	WSI	
1N1508	ΔINRC	170-149
CODI	♦DIC	
GSE	IDC	
INRB	INRI	
INRJ	ITT	
MOTA	SSI	
TNC	TRW	
	WSI	
1N1508A	ΔINRC	170-150
CODI	♦DIC	
GSE	IDC	
INRB	INRI	
INRJ	ITT	
MOTA	SSI	
TNC	TRW	
	WSI	
1N1509,A	ΔINRC	173- 59
CODI	♦DIC	
GSE	IDC	
INRB	INRI	
INRJ	MOTA	
MSC	SAR	
SSI	TNC	
TRW	WSI	
1N1510,A	ΔINRC	177-136
CODI	♦DIC	
GSE	IDC	
INRB	INRI	
INRJ	MOTA	
MSC	SAR	
SSI	TNC	
TRW	UNI	
	WSI	
1N1511,A	ΔINRC	182- 50
CODI	♦DIC	
GSE	IDC	
INRB	INRI	
INRJ	MOTA	
MSC	SAR	
SSI	TNC	
TRW	UNI	
	WSI	
1N1512,A	ΔINRC	188- 53
CODI	♦DIC	
GSE	IDC	
INRB	INRI	
INRJ	MOTA	
MSC	SAR	
SSI	TNC	
TRW	UNI	
	WSI	
1N1513,A	ΔINRC	192-121
CODI	♦DIC	
GSE	IDC	
INRB	INRI	
INRJ	MOTA	
MSC	SAR	
SSI	TNC	
TRW	UNI	
	WSI	
1N1514,A	ΔINRC	197-139
CODI	♦DIC	
GSE	IDC	
INRB	INRI	
INRJ	MOTA	
MSC	SAR	
SSI	TNC	
TRW	UNI	
	WSI	
1N1515,A	ΔINRC	202- 46
CODI	♦DIC	
GSE	IDC	
INRB	INRI	
INRJ	MOTA	
MSC	SAR	
SSI	TNC	
TRW	UNI	
	WSI	
1N1516,A	ΔINRC	206-159
CODI	♦DIC	
GSE	IDC	
INRB	INRI	
INRJ	MOTA	
MSC	SAR	
SSI	TNC	
TRW	UNI	
	WSI	
1N1517,A	ΔINRC	211- 42
CODI	♦DIC	
GSE	IDC	
INRB	INRI	
INRJ	MOTA	
MSC	SAR	
SSI	TNC	
TRW	UNI	
	WSI	
1N1518	ΔINRC	168-150
CODI	♦DIC	
GSE	IDC	
INRB	INRI	
INRJ	ITT	
MOTA	MSC	
SDI	SSI	
TNC	TRW	
	WSI	
1N1518A	ΔINRC	168-151

cont.next col

TYPE No.	MFRS	Pg&Line
1N1518A (cont.)	CODI	
♦DIC	GSE	
IDC	INRB	
INRI	INRJ	
ITT	MOTA	
SDI	SSI	
TNC	TRW	
	WSI	
1N1519,A	ΔINRC	170-155
CODI	♦DIC	
GSE	IDC	
INRB	INRI	
INRJ	ITT	
MOTA	MSC	
SDI	SSI	
TNC	TRW	
	WSI	
1N1520,A	ΔINRC	173- 64
CODI	♦DIC	
GSE	IDC	
INRB	INRI	
INRJ	ITT	
MOTA	MSC	
SAR	SDI	
SSI	TNC	
TRW	UNI	
	WSI	
1N1521,A	ΔINRC	177-145
CODI	♦DIC	
GSE	IDC	
INRB	INRI	
INRJ	ITT	
MOTA	MSC	
SAR	SCN	
SDI	SSI	
TNC	TRW	
UNI	WSI	
1N1522,A	ΔINRC	182- 60
CODI	♦DIC	
GSE	IDC	
INRB	INRI	
INRJ	ITT	
MOTA	MSC	
SAR	SCN	
SDI	SSI	
TNC	TRW	
UNI	WSI	
1N1523,A	ΔINRC	188- 66
CODI	♦DIC	
GSE	IDC	
INRB	INRI	
INRJ	ITT	
MOTA	MSC	
SAR	SCN	
SDI	SSI	
TNC	TRW	
UNI	WSI	
1N1524,A	ΔINRC	192-135
CODI	♦DIC	
GSE	IDC	
INRB	INRI	
INRJ	ITT	
MOTA	MSC	
SAR	SCN	
SDI	SSI	
TNC	TRW	
UNI	WSI	
1N1525,A	ΔINRC	197-152
CODI	♦DIC	
GSE	IDC	
INRB	INRI	
INRJ	ITT	
MOTA	MSC	
SAR	SCN	
SDI	SSI	
TNC	TRW	
UNI	WSI	
1N1526,A	ΔINRC	202- 60
CODI	♦DIC	
GSE	IDC	
INRB	INRI	
INRJ	ITT	
MOTA	MSC	
SAR	SCN	
SDI	SSI	
TNC	TRW	
UNI	WSI	
1N1527,A	ΔINRC	206-172
CODI	♦DIC	
GSE	IDC	
INRB	INRI	
INRJ	ITT	
MOTA	MSC	
SAR	SCN	
SDI	SSI	
TNC	TRW	
UNI	WSI	
1N1528,A	ΔINRC	211- 53
CODI	♦DIC	
GSE	IDC	
INRB	INRI	
INRJ	ITT	
MOTA	MSC	
SAR	SCN	
SDI	SSI	
TNC	TRW	
UNI	WSI	
1N1530	♦ΔCRL	183-126
CODI	♦DIC	
GSE	INRB	
INRC	INRI	
INRJ	♦MOTA	

cont.next page

Δ-Registered with JEDEC by this manufacturer

♦-Copy of mfr's data sheet may be ordered from D.A.T.A.

1. TYPE No. CROSS INDEX

IN TYPE NUMBER SEQUENCE

TYPE No.	MFRS	Pg&Line
1N1530		
(cont)	♦MSC	
SSI	TRW	
TSC	WSI	
1N1530A	♦△CRL	183-127
CODI	♦DIC	
GSE	INRB	
INRC	INRI	
INRJ	♦MOTA	
♦MSC	SSI	
TRW	TSC	
	WSI	
JAN1N1530A	DIC	183-128
	MOTA	
1N1537	BRA	295- 5
EDI	ETC	
GIC	IDC	
INRB	INRC	
INRI	INRJ	
ITT	MOTA	
SAR	SCN	
SES	SOD	
SSI	TEC	
TNC	UPI	
1N1538	BRA	302- 25
EDI	ETC	
GIC	IDC	
INRB	INRC	
INRI	INRJ	
ITT	MOTA	
SAR	SCN	
SES	SOD	
SSI	TEC	
TNC	UPI	
1N1539	BRA	307-101
EDI	ETC	
GIC	INRB	
INRC	INRI	
INRJ	ITT	
MOTA	SAR	
SCN	SES	
SOD	SSI	
TEC	TNC	
	UPI	
1N1540	BRA	313- 26
EDI	ETC	
GIC	IDC	
INRB	INRC	
INRI	INRJ	
ITT	MOTA	
SAR	SCN	
SES	SOD	
SSI	TEC	
TNC	UPI	
1N1541	BRA	322- 87
EDI	ETC	
GIC	INRB	
INRC	INRI	
INRJ	ITT	
MOTA	SAR	
SCN	SES	
SOD	SSI	
TEC	TNC	
	UPI	
1N1542	BRA	332- 13
EDI	ETC	
GIC	INRB	
INRC	INRI	
INRJ	ITT	
MOTA	SAR	
SCN	SES	
SOD	SSI	
TEC	TNC	
	UPI	
1N1543	△WESY	341- 50
BRA	EDI	
ETC	GIC	
INRB	INRC	
INRI	INRJ	
ITT	MOTA	
SAR	SCN	
SES	SOD	
SSI	TEC	
	TNC	
1N1544	△WESY	349- 33
BRA	EDI	
ETC	GIC	
INRB	INRC	
INRI	INRJ	
ITT	MOTA	
SAR	SCN	
SES	SOD	
SSI	TEC	
	TNC	
1N1551	BRA	301- 33
ETC	GIC	
IDC	SCN	
SSI	TEC	
1N1552	BRA	312- 33
ETC	GIC	
IDC	SCN	
SSI	TEC	
	UPI	
1N1553	BRA	322- 6
ETC	GIC	
IDC	SCN	
SSI	TEC	
	UPI	
1N1554	BRA	331- 14
ETC	GIC	
IDC	SCN	
SSI	TEC	
	UPI	

TYPE No.	MFRS	Pg&Line
1N1555	BRA	340- 86
ETC	GIC	
IDC	SCN	
SSI	TEC	
1N1556	BRA	300- 48
ETC	GIC	
SCN	TEC	
	UPI	
1N1557	BRA	311- 31
ETC	GIC	
IDC	SCN	
TEC	UPI	
1N1558	BRA	321- 54
ETC	GIC	
SCN	TEC	
	UPI	
1N1559	BRA	330- 7
ETC	GIC	
SCN	TEC	
	UPI	
1N1560	BRA	340- 25
ETC	GIC	
IDC	SCN	
	TEC	
1N1563	△MOTA	301-109
	SSI	
1N1564	SSI	312-110
1N1565	SSI	322- 63
1N1566	SSI	331- 96
1N1567	SSI	341- 31
1N1568	SSI	349- 10
1N1575	GIC	303- 27
	SSI	
1N1576	GIC	314- 36
	SSI	
1N1577	GIC	323- 63
	SSI	
1N1578	GIC	333- 29
	SSI	
1N1581	△TEC	295- 85
AMD	BRA	
EDI	EDL	
ESMF	ETC	
IDC	INRB	
INRC	INRI	
INRJ	ITT	
MISI	SAR	
SES	SET	
SOD	SOIF	
SSI	SYN	
TII	TIIB	
TIID	TIIF	
TNC	TUNL	
	UPI	
1N1582	△TEC	303- 24
AMD	BRA	
EDI	EDL	
ESMF	ETC	
IDC	INRB	
INRC	INRI	
INRJ	ITT	
MISI	SAR	
SES	SET	
SOD	SOIF	
SSI	SYN	
TII	TIIB	
TIID	TIIF	
TNC	TUNL	
	UPI	
1N1583	△TEC	314- 33
AMD	BRA	
EDI	EDL	
ESMF	ETC	
INRB	INRC	
INRI	INRJ	
ITT	MISI	
SAR	SES	
SET	SOD	
SOIF	SSI	
SYN	TII	
TIIB	TIID	
TIIF	TNC	
TUNL	UPI	
1N1584	△TEC	323- 58
AMD	BRA	
EDI	EDL	
ESMF	ETC	
INRB	INRC	
INRI	INRJ	
ITT	MISI	
SAR	SES	
SET	SOD	
SOIF	SSI	
SYN	TII	
TIIB	TIID	
TIIF	TNC	
TUNL	UPI	
1N1585	△TEC	333- 26
AMD	BRA	
EDI	EDL	
ESMF	ETC	
IDC	INRB	
INRC	INRI	
INRJ	ITT	
MISI	SAR	
SES	SET	
SOD	SOIF	
SSI	SYN	
TII	TIIB	
TIID	TIIF	
TNC	TUNL	
	UPI	
1N1586	△TEC	342- 15
cont.next col		

TYPE No.	MFRS	Pg&Line
1N1586		
(cont)	AMD	
BRA	EDI	
EDL	ESMF	
ETC	IDC	
INRB	INRC	
INRI	INRJ	
ITT	MISI	
SAR	SES	
SET	SOD	
SOIF	SSI	
SYN	TII	
TIIB	TIID	
TIIF	TNC	
	TUNL	
1N1587	△TEC	350- 44
AMD	BRA	
EDI	EDL	
ESMF	ETC	
IDC	INRB	
INRC	INRI	
INRJ	ITT	
MISI	SAR	
SES	SET	
SOD	SOIF	
SSI	SYN	
TII	TIIB	
TIID	TIIF	
TNC	TUNL	
1N1588,A	△INRC	169- 5
ASC	♦DIC	
GSE	IDC	
INRB	INRI	
INRJ	ITT	
MOTA	MSC	
SDI	SSI	
TNC	USS	
1N1589,A	△INRC	171- 12
ASC	♦DIC	
GSE	IDC	
INRB	INRI	
INRJ	ITT	
MOTA	MSC	
SDI	SSI	
TNC	USS	
1N1590,A	△INRC	173-127
ASC	♦DIC	
GSE	IDC	
INRB	INRI	
INRJ	ITT	
MOTA	MSC	
SAR	SDI	
SSI	TNC	
	USS	
1N1591,A	△INRC	178- 89
ASC	♦DIC	
GSE	IDC	
INRB	INRI	
INRJ	ITT	
MOTA	MSC	
SAR	SCN	
SDI	SOD	
SSI	TNC	
	USS	
1N1592,A	△INRC	182-185
ASC	♦DIC	
GSE	IDC	
INRB	INRI	
INRJ	ITT	
MOTA	MSC	
SAR	SCN	
SDI	SOD	
SSI	TNC	
	USS	
1N1593,A	△INRC	189- 12
ASC	♦DIC	
GSE	IDC	
INRB	INRI	
INRJ	ITT	
MOTA	MSC	
SAR	SCN	
SDI	SOD	
SSI	TNC	
	USS	
1N1594,A	△INRC	193-101
ASC	♦DIC	
GSE	IDC	
INRB	INRI	
INRJ	ITT	
MOTA	MSC	
SAR	SCN	
SDI	SOD	
SSI	TNC	
	USS	
1N1595,A	△INRC	198-102
ASC	♦DIC	
GSE	IDC	
INRB	INRI	
INRJ	ITT	
MOTA	MSC	
SAR	SCN	
SDI	SOD	
SSI	TNC	
	USS	
1N1596,A	△INRC	202-194
ASC	♦DIC	
GSE	IDC	
INRB	INRI	
INRJ	ITT	
MOTA	MSC	
SAR	SCN	
SDI	SOD	
SSI	TNC	
	USS	

TYPE No.	MFRS	Pg&Line
1N1597,A	△INRC	207-117
ASC	♦DIC	
GSE	IDC	
INRB	INRI	
INRJ	ITT	
MOTA	MSC	
SAR	SCN	
SDI	SOD	
SSI	TNC	
	USS	
1N1598,A	△INRC	211-184
ASC	♦DIC	
GSE	IDC	
INRB	INRI	
INRJ	ITT	
MOTA	MSC	
SAR	SCN	
SDI	SOD	
SSI	TNC	
	USS	
1N1599,A	△INRC	169- 12
♦DIC	EDI	
GSE	IDC	
INRB	INRI	
INRJ	ITT	
MOTA	SDI	
SOD	SSI	
TNC	♦USS	
1N1600,A	△INRC	171- 20
♦DIC	EDI	
GSE	IDC	
INRB	INRI	
INRJ	ITT	
MOTA	SDI	
SOD	SSI	
TNC	♦USS	
1N1601,A	△INRC	173-134
♦DIC	EDI	
GSE	IDC	
INRB	INRI	
INRJ	ITT	
MOTA	SAR	
SDI	SOD	
SSI	TNC	
	♦USS	
1N1602,A	△INRC	178-115
ASC	♦DIC	
EDI	GSE	
IDC	INRB	
INRI	INRJ	
MOTA	SAR	
SCN	SDI	
SOD	SSI	
TNC	TRW	
	♦USS	
1N1603,A	△INRC	183- 27
ASC	♦DIC	
EDI	GSE	
IDC	INRB	
INRI	INRJ	
ITT	MOTA	
SAR	SCN	
SDI	SOD	
SSI	TNC	
TRW	♦USS	
1N1604,A	△INRC	189- 44
ASC	♦DIC	
EDI	ETC	
GSE	IDC	
INRB	INRI	
INRJ	ITT	
MOTA	SAR	
SCN	SDI	
SOD	SSI	
TNC	TRW	
	♦USS	
1N1605,A	△INRC	193-135
ASC	♦DIC	
EDI	ETC	
GSE	IDC	
INRB	INRI	
INRJ	ITT	
MOTA	SAR	
SCN	SDI	
SOD	SSI	
TNC	TRW	
	♦USS	
1N1606,A	△INRC	198-136
ASC	♦DIC	
EDI	ETC	
GSE	IDC	
INRB	INRI	
INRJ	ITT	
MOTA	SAR	
SCN	SDI	
SOD	SSI	
TNC	TRW	
	♦USS	
1N1607,A	△INRC	203- 28
ASC	♦DIC	
EDI	ETC	
GSE	IDC	
INRB	INRI	
INRJ	ITT	
MOTA	SAR	
SCN	SDI	
SOD	SSI	
TNC	TRW	
	♦USS	
1N1608,A	△INRC	207-151
ASC	♦DIC	
EDI	ETC	
GSE	IDC	
cont.next col.		

TYPE No.	MFRS	Pg&Line
1N1608,A		
(cont)	INRB	
INRI	INRJ	
ITT	MOTA	
SAR	SCN	
SDI	SOD	
SSI	TNC	
TRW	♦USS	
1N1609,A	△INRC	212- 22
ASC	♦DIC	
EDI	ETC	
GSE	IDC	
INRB	INRI	
INRJ	ITT	
MOTA	SAR	
SCN	SDI	
SOD	SSI	
TNC	TRW	
	♦USS	
1N1610	♦ALP	517- 3
	MIC	
1N1611	△ALP	517- 44
	MIC	
1N1611A	△MIC	517- 45
ALP	KEM	
1N1611B	△MIC	517- 46
	♦ALP	
1N1612	△SOD	295- 94
BRA	EDI	
EDL	♦ETC	
♦GESY	IDC	
INRB	INRC	
INRI	INRJ	
ITT	MOTA	
♦RCA	SAR	
SCN	SES	
SET	SSI	
SYN	TEC	
TII	TIIB	
TIID	TIIF	
TNC	TUNL	
UPI	WESY	
1N1612A	BRA	295-107
EDI	ETC	
IDC	INRB	
INRC	INRI	
INRJ	ITT	
SAR	SCN	
SOD	SSI	
	UPI	
1N1612R	♦ETC	296- 23
♦GESY	SSI	
	UPI	
1N1613	△SOD	303- 41
BRA	EDI	
EDL	♦ETC	
♦GESY	IDC	
INRB	INRC	
INRI	INRJ	
ITT	MOTA	
♦RCA	SAR	
SCN	SES	
SET	SSI	
SYN	TEC	
TII	TIIB	
TIID	TIIF	
TNC	TUNL	
UPI	WESY	
1N1613A	BRA	303- 59
EDI	ETC	
IDC	INRB	
INRC	INRI	
INRJ	ITT	
SAR	SCN	
SOD	SSI	
	UPI	
1N1613R	♦ETC	303- 89
♦GESY	UPI	
1N1614	△SOD	314- 51
BRA	EDI	
EDL	♦ETC	
♦GESY	IDC	
INRB	INRC	
INRI	INRJ	
ITT	MOTA	
♦RCA	SAR	
SCN	SES	
SET	SSI	
SYN	TEC	
TII	TIIB	
TIID	TIIF	
TNC	TUNL	
UPI	WESY	
JAN1N1614,R	GESY	318-104
SOD	TRW	
	WESY	
1N1614A	BRA	314- 73
EDI	ETC	
IDC	INRB	
INRC	INRI	
INRJ	ITT	
SAR	SCN	
SOD	SSI	
	UPI	
1N1614R	♦ETC	314-109
♦GESY	UPI	
1N1615	△SOD	333- 43
BRA	EDI	
EDL	♦ETC	
♦GESY	IDC	
INRB	INRC	
INRI	INRJ	
ITT	MOTA	
cont.next page		

△-Registered with JEDEC by this manufacturer

♦-Copy of mfr's data sheet may be ordered from D.A.T.A.

1. TYPE No. CROSS INDEX

IN TYPE NUMBER SEQUENCE

TYPE No.	MFRS	Pg&Line
1N1615		
(cont)	♦RCA	
SAR	SCN	
SES	SET	
SSI	SYN	
TEC	TII	
TIIB	TIID	
TIIF	TNC	
TUNL	UPI	
	WESY	
JAN1N1615,R	GESY	338 - 72
SOD	TRW	
	WESY	
1N1615A	BRA	333 - 65
EDI	ETC	
IDC	INRB	
INRC	INRI	
INRJ	ITT	
SAR	SCN	
SOD	SSI	
	UPI	
1N1615R	♦ETC	333 -108
♦GESY	UPI	
1N1616	△SOD	350 - 64
BRA	EDI	
EDL	♦ETC	
♦GESY	IDC	
INRB	INRC	
INRI	INRJ	
ITT	MOTA	
♦RCA	SAR	
SCN	SES	
SET	SSI	
SYN	TEC	
TII	TIIB	
TIID	TIIF	
TNC	TUNL	
	WESY	
JAN1N1616,R	GESY	358 - 76
SOD	TRW	
	WESY	
1N1616A	BRA	350 - 79
EDI	ETC	
IDC	INRB	
INRC	INRI	
INRJ	ITT	
SAR	SCN	
SOD	SSI	
1N1616R	♦ETC	351 - 15
	♦GESY	
1N1617	△SAR	302 - 14
	UPI	
1N1618	△SAR	313 - 16
	UPI	
1N1619	△SAR	322 - 77
	UPI	
1N1620	△SAR	332 - 3
	UPI	
1N1621	♦△SAR	304 - 5
1N1622	♦△SAR	315 - 29
1N1623	♦△SAR	324 - 31
1N1624	♦△SAR	334 - 28
1N1625	EDL	249 - 75
1N1625A	EDL	249 - 80
1N1626	EDL	253 - 60
1N1626A	EDL	253 - 56
1N1627	△INRC	249 - 87
EDL	INRB	
INRI	INRJ	
1N1628	△INRC	253 - 57
EDL	INRB	
INRI	INRJ	
1N1629	△INRC	255 - 52
EDL	INRB	
INRI	INRJ	
1N1630	△INRC	256 - 91
EDL	INRB	
INRI	INRJ	
1N1631	△INRC	258 - 2
EDL	INRB	
INRI	INRJ	
1N1632	△INRC	258 - 33
EDL	INRB	
INRI	INRJ	
1N1633	△INRC	259 - 5
EDL	INRB	
INRI	INRJ	
1N1634	△INRC	258 - 64
EDL	INRB	
INRI	INRJ	
1N1635	△INRC	249 - 98
EDL	INRB	
INRI	INRJ	
1N1636	△INRC	253 - 58
EDL	IDC	
INRB	INRI	
	INRJ	
1N1637	△INRC	255 - 56
EDL	INRB	
INRI	INRJ	
1N1638	△INRC	256 - 92
EDL	INRB	
INRI	INRJ	
1N1639	△INRC	258 - 3
EDL	INRB	
INRI	INRJ	
1N1640	△INRC	250 - 1
EDL	INRB	
INRI	INRJ	
1N1641	△INRC	253 - 59
EDL	IDC	
INRB	INRI	
	INRJ	

TYPE No.	MFRS	Pg&Line
1N1642	△INRC	255 - 57
EDL	INRB	
INRI	INRJ	
1N1644	ETC	293 - 73
GIC	IDC	
ITT	SCN	
	TEC	
1N1645	ETC	300 - 24
GIC	ITT	
SCN	TEC	
1N1646	ETC	307 - 75
GIC	ITT	
SCN	TEC	
1N1647	ETC	310 -110
GIC	ITT	
SCN	TEC	
	UPI	
1N1648	ETC	319 - 25
GIC	ITT	
SCN	TEC	
	UPI	
1N1649	ETC	321 - 31
GIC	ITT	
SCN	TEC	
	UPI	
1N1650	ETC	327 - 39
GIC	ITT	
SCN	TEC	
	UPI	
1N1651	ETC	329 - 84
GIC	ITT	
SCN	TEC	
	UPI	
1N1652	ETC	340 - 4
GIC	ITT	
SCN	TEC	
1N1653	ETC	347 - 6
GIC	ITT	
SCN	TEC	
1N1660	EDL	297 - 87
ETC	INRB	
INRC	INRI	
INRJ	SSI	
SYN	TUNL	
1N1661	EDL	306 - 14
ETC	INRB	
INRC	INRI	
INRJ	SSI	
SYN	TUNL	
1N1662	EDL	308 - 86
ETC	INRB	
INRC	INRI	
INRJ	SSI	
SYN	TUNL	
1N1663	EDL	317 - 71
ETC	INRB	
INRC	INRI	
INRJ	SSI	
SYN	TUNL	
1N1664	EDL	325 -109
ETC	INRB	
INRC	INRI	
INRJ	SSI	
SYN	TUNL	
1N1665	EDL	336 - 98
ETC	INRB	
INRC	INRI	
INRJ	SSI	
SYN	TUNL	
1N1666	EDL	344 - 34
INRB	INRC	
INRI	INRJ	
SSI	SYN	
	TUNL	
1N1670	INRB	297 -109
INRC	INRI	
INRJ	SSI	
	TUNL	
1N1671	ETC	306 - 53
INRB	INRC	
INRI	INRJ	
SSI	TUNL	
1N1672	ETC	308 -107
INRB	INRC	
INRI	INRJ	
SSI	TUNL	
1N1673	ETC	318 - 3
INRB	INRC	
INRI	INRJ	
SSI	TUNL	
1N1674	ETC	326 - 38
INRB	INRC	
INRI	INRJ	
SSI	TUNL	
1N1675	ETC	337 - 41
INRB	INRC	
INRI	INRJ	
SSI	TUNL	
1N1676	INRB	344 - 75
INRC	INRI	
INRJ	SSI	
	TUNL	
1N1680	SSI	308 - 62
1N1681	SSI	319 - 65
1N1682	SSI	325 - 56
1N1683	SSI	327 - 76
1N1684	SSI	336 - 30
1N1685	SSI	338 - 58
1N1686	SSI	343 - 94
1N1687	SSI	353 - 2
1N1688	SSI	357 - 66
1N1689	SSI	365 - 19
1N1690	SSI	368 - 8
1N1691	SSI	374 - 75

TYPE No.	MFRS	Pg&Line
1N1692	BRA	299 - 98
ETC	GELC	
GIC	GICC	
IDC	INRB	
INRC	INRI	
INRJ	ITT	
KEM	SAR	
SCN	SES	
TEC	TII	
TIID	TIIF	
1N1693	BRA	310 - 67
ETC	GELC	
GIC	GICC	
IDC	INRB	
INRC	INRI	
INRJ	ITT	
SAR	SCN	
SES	TEC	
TII	TIID	
TIIF	UPI	
1N1694	BRA	320 -109
ETC	GELC	
GIC	GICC	
IDC	INRB	
INRC	INRI	
INRJ	ITT	
SAR	SCN	
SES	TEC	
TII	TIID	
TIIF	UPI	
1N1695	BRA	329 - 35
ETC	GELC	
GIC	GICC	
IDC	INRB	
INRC	INRI	
INRJ	ITT	
SAR	SCN	
SES	TEC	
TII	TIID	
	TIIF	
1N1696	BRA	339 - 81
ETC	GELC	
GIC	GICC	
IDC	INRB	
INRC	INRI	
INRJ	ITT	
SAR	SCN	
SES	TEC	
TII	TIID	
	TIIF	
1N1697	BRA	346 - 74
ETC	GELC	
GIC	GICC	
IDC	INRB	
INRC	INRI	
INRJ	ITT	
SAR	SCN	
SES	TEC	
TII	TIID	
	TIIF	
1N1698	△INRC	401 -108
INRB	INRI	
INRJ	SCO	
1N1699	△INRC	406 - 26
INRB	INRI	
INRJ	SCO	
1N1700	△INRC	407 - 45
INRB	INRI	
INRJ	SCO	
1N1701	IDC	293 - 4
ITT	SAR	
SCN	SES	
TEC	UPI	
1N1702	IDC	299 - 30
ITT	SAR	
SCN	SES	
TEC	UPI	
1N1703	IDC	309 -101
ITT	SAR	
SCN	SES	
TEC	UPI	
1N1704	ITT	320 - 57
SAR	SCN	
SES	TEC	
	UPI	
1N1705	ITT	328 - 54
SAR	SCN	
SES	TEC	
	UPI	
1N1706	IDC	339 - 20
ITT	SAR	
SCN	SES	
	TEC	
1N1707	IDC	293 - 33
ITT	SAR	
SCN	SES	
	TEC	
1N1708	ITT	299 - 73
SAR	SCN	
SES	TEC	
1N1709	ITT	310 - 36
SAR	SCN	
SES	TEC	
	UPI	
1N1710	ITT	320 - 87
SAR	SCN	
SES	TEC	
	UPI	
1N1711	ITT	328 -103
SAR	SCN	
SES	TEC	
	UPI	
1N1712	ITT	339 - 52
cont next col		

TYPE No.	MFRS	Pg&Line
1N1712		
(cont)	SAR	
SCN	SES	
	TEC	
1N1730	△TRW	369 - 56
BRA	CODI	
♦DIC	EDI	
EDL	EMLS	
♦GESY	♦GIC	
GICC	GSE	
INRB	INRC	
INRI	INRJ	
ITT	MOTA	
MSC	RAYN	
SAR	SCN	
SCO	SEN	
SES	SET	
SOD	SSI	
TEC	TNC	
	WSI	
1N1730A	△TRW	369 - 29
EDL	♦GIC	
INRB	INRC	
INRI	INRJ	
MSC	SCN	
SEN	SOD	
	SSI	
1N1731	△TRW	384 - 20
BRA	CODI	
♦DIC	EDI	
EDL	EMLS	
♦GESY	♦GIC	
GICC	INRB	
INRC	INRI	
INRJ	ITT	
MOTA	MSC	
RAYN	SAR	
SCN	SCO	
SEN	SES	
SET	SOD	
SSI	TEC	
TNC	WSI	
1N1731A	△TRW	383 -106
EDL	♦GIC	
INRB	INRC	
INRI	INRJ	
MSC	SCN	
SEN	SOD	
	SSI	
JAN1N1731A	GIC	388 - 7
	TRW	
1N1732	△TRW	389 - 67
BRA	CODI	
♦DIC	EDI	
EDL	EMLS	
♦GESY	♦GIC	
GICC	INRB	
INRC	INRI	
INRJ	ITT	
MOTA	MSC	
RAYN	SAR	
SCN	SCO	
SEN	SES	
SET	SOD	
SOIF	SSI	
TEC	TNC	
	WSI	
1N1732A	△TRW	389 - 43
EDL	♦GIC	
INRB	INRC	
INRI	INRJ	
MSC	SCN	
SEN	SOD	
	SSI	
1N1733	△TRW	393 -108
BRA	CODI	
♦DIC	EDI	
EDL	EMLS	
♦GESY	♦GIC	
GICC	INRB	
INRC	INRI	
INRJ	ITT	
MOTA	MSC	
RAYN	SAR	
SCN	SCO	
SEN	SES	
SET	SOD	
SOIF	SSI	
TEC	TNC	
	WSI	
1N1733A	△TRW	393 - 89
EDL	♦GIC	
INRB	INRC	
INRI	INRJ	
MSC	SCN	
SEN	SOD	
	SSI	
JAN1N1733A	GIC	395 -101
	TRW	
1N1734	△TRW	399 - 28
BRA	CODI	
♦DIC	EDI	
EDL	EMLS	
♦GESY	♦GIC	
GICC	INRB	
INRC	INRI	
INRJ	ITT	
MOTA	MSC	
RAYN	SAR	
SCN	SCO	
SEN	SES	
SET	SOD	
SOIF	SSI	
cont next col		

TYPE No.	MFRS	Pg&Line
1N1734		
(cont)	TEC	
TNC	WSI	
1N1734A	△TRW	399 - 26
EDL	♦GIC	
INRB	INRC	
INRI	INRJ	
MSC	SCN	
SEN	SOD	
	SSI	
JAN1N1734A	GIC	401 - 36
	TRW	
1N1735	♦△CRL	174 - 76
CODI	♦DIC	
GSE	IDC	
INRB	INRC	
INRI	INRJ	
ITT	♦MOTA	
♦MSC	SDI	
SSI	TNC	
TRW	TSC	
USS	WSI	
1N1736	♦△CRL	193 -196
CODI	♦DIC	
GSE	IDC	
INRB	INRC	
INRI	INRJ	
ITT	♦MOTA	
MSC	SDI	
SOD	SSI	
TNC	TRW	
TSC	USS	
	WSI	
1N1736A	♦△CRL	193 -197
CODI	♦DIC	
GSE	IDC	
INRB	INRC	
INRI	INRJ	
♦MOTA	MSC	
SDI	SOD	
SSI	TNC	
TRW	TSC	
USS	WSI	
1N1737	♦△CRL	203 - 96
CODI	♦DIC	
GSE	IDC	
INRB	INRC	
INRI	INRJ	
ITT	♦MOTA	
MSC	SDI	
SOD	SOIF	
SSI	TNC	
TRW	TSC	
USS	WSI	
1N1737A	♦△CRL	203 - 97
CODI	♦DIC	
GSE	IDC	
INRB	INRC	
INRI	INRJ	
♦MOTA	MSC	
SDI	SOD	
SOIF	SSI	
TNC	TRW	
TSC	USS	
	WSI	
1N1738	♦△CRL	209 -180
CODI	♦DIC	
GSE	IDC	
INRB	INRC	
INRI	INRJ	
ITT	♦MOTA	
MSC	SDI	
SOD	SOIF	
SSI	TNC	
TRW	TSC	
USS	WSI	
1N1738A	♦△CRL	209 -181
CODI	♦DIC	
GSE	IDC	
INRB	INRC	
INRI	INRJ	
♦MOTA	MSC	
SDI	SOD	
SOIF	SSI	
TNC	TRW	
TSC	USS	
	WSI	
1N1739	♦△CRL	214 - 73
CODI	♦DIC	
GSE	IDC	
INRB	INRC	
INRI	INRJ	
ITT	♦MOTA	
MSC	SDI	
SOD	SSI	
TNC	TRW	
TSC	USS	
1N1739A	♦△CRL	214 - 74
CODI	♦DIC	
GSE	IDC	
INRB	INRC	
INRI	INRJ	
♦MOTA	MSC	
SDI	SOD	
SSI	TNC	
TRW	TSC	
	USS	
1N1740	♦△CRL	217 -123
CODI	♦DIC	
GSE	IDC	
INRB	INRC	
INRI	INRJ	
ITT	♦MOTA	
cont next page		

△-Registered with JEDEC by this manufacturer

♦-Copy of mfr's data sheet may be ordered from D.A.T.A.

1. TYPE No. CROSS INDEX

IN TYPE NUMBER SEQUENCE

TYPE No.	MFRS	Pg&Line
1N1740 (cont)	MSC	
	SDI	
	SOD	
	SSI	
	TNC	
	TRW	
	TSC	
	USS	
1N1740A	♦△CRL	217-124
	CODI	♦DIC
	GSE	IDC
	INRB	INRC
	INRI	INRJ
	♦MOTA	MSC
	SDI	SOD
	SSI	TNC
	TRW	TSC
		USS
1N1741	♦△CRL	220-74
	CODI	♦DIC
	GSE	IDC
	INRB	INRC
	INRI	INRJ
	ITT	♦MOTA
	MSC	SDI
	SOD	SSI
	TNC	TRW
	TSC	USS
1N1741A	♦△CRL	220-75
	CODI	♦DIC
	GSE	IDC
	INRB	INRC
	INRI	INRJ
	♦MOTA	MSC
	SDI	SOD
	SSI	TNC
	TRW	TSC
		USS
1N1742	♦△CRL	222-45
	CODI	♦DIC
	GSE	IDC
	INRB	INRC
	INRI	INRJ
	ITT	♦MOTA
	MSC	SDI
	SOD	SSI
	TNC	TRW
	TSC	USS
1N1742A	♦△CRL	222-46
	CODI	♦DIC
	GSE	IDC
	INRB	INRC
	INRI	INRJ
	♦MOTA	MSC
	SDI	SOD
	SSI	TNC
	TRW	TSC
		USS
JAN1N1742A	DIC	222-47
	MOTA	TSC
1N1744	MSC	188-67
1N1745	△INRC	384-48
	BRA	♦DIC
	INRB	INRI
	INRJ	ITT
	SCN	SCO
	SES	SOD
	SSI	TNC
1N1746	△INRC	384-52
	BRA	♦DIC
	INRB	INRI
	INRJ	ITT
	SCN	SCO
	SES	SOD
	SSI	TNC
1N1747	△INRC	388-8
	BRA	♦DIC
	INRB	INRI
	INRJ	ITT
	SCN	SCO
	SES	SOD
	SSI	TNC
1N1748	△INRC	388-11
	BRA	♦DIC
	INRB	INRI
	INRJ	ITT
	SCN	SCO
	SES	SOD
	SSI	TNC
1N1749	△INRC	391-74
	BRA	♦DIC
	INRB	INRI
	INRJ	ITT
	SCN	SCO
	SES	SOD
	SSI	TNC
1N1750	△INRC	391-76
	BRA	♦DIC
	INRB	INRI
	INRJ	ITT
	SCN	SCO
	SES	SOD
	SSI	TNC
1N1751	△INRC	395-103
	BRA	♦DIC
	INRB	INRI
	INRJ	ITT
	SCN	SCO
	SES	SOD
		SSI
1N1752	△INRC	395-102
	BRA	♦DIC
	INRB	INRI
	INRJ	ITT
	SCN	SCO
cont next col		

TYPE No.	MFRS	Pg&Line
1N1752 (cont)	SES	
	SOD	SSI
		TNC
1N1753	△INRC	398-63
	BRA	♦DIC
	INRB	INRI
	INRJ	ITT
	SCN	SCO
	SES	SOD
		SSI
1N1754	△INRC	398-62
	BRA	♦DIC
	INRB	INRI
	INRJ	ITT
	SCN	SCO
	SES	SOD
	SSI	TNC
1N1755	△INRC	401-25
	BRA	♦DIC
	INRB	INRI
	INRJ	ITT
	SCN	SCO
	SES	SOD
		SSI
1N1756	△INRC	401-39
	BRA	♦DIC
	INRB	INRI
	INRJ	ITT
	SCN	SCO
	SES	SOD
		SSI
1N1757	△INRC	402-80
	BRA	♦DIC
	INRB	INRI
	INRJ	ITT
	SCN	SCO
	SES	SOD
	SSI	TNC
1N1758	△INRC	402-82
	BRA	♦DIC
	INRB	INRI
	INRJ	ITT
	SCN	SCO
	SES	SOD
		SSI
1N1759	△INRC	403-85
	BRA	♦DIC
	INRB	INRI
	INRJ	ITT
	SCN	SCO
	SES	SOD
	SSI	TNC
1N1760	△INRC	407-37
	BRA	♦DIC
	INRB	INRI
	INRJ	ITT
	SCN	SCO
	SES	SOD
	SSI	TNC
1N1761	△INRC	407-103
	BRA	♦DIC
	INRB	INRI
	INRJ	ITT
	SCN	SCO
	SES	SOD
	SSI	TNC
1N1762	△INRC	409-10
	BRA	♦DIC
	INRB	INRI
	INRJ	ITT
	SCN	SCO
	SES	SOD
	SSI	TNC
1N1763	△RCA	328-110
	BRA	GELC
	GIC	INRB
	INRC	INRI
	INRJ	ITT
	SAR	SCN
	TEC	UPI
1N1763A	♦△RCA	330-102
	ETC	IDC
	INRB	INRC
	INRI	INRJ
	SCN	UPI
1N1764	△RCA	339-55
	BRA	GIC
	GICC	IDC
	ITT	SAR
	SCN	TEC
1N1764A	♦△RCA	340-78
	ETC	IDC
	INRB	INRC
	INRI	INRJ
		SCN
1N1765,A	CODI	173-65
	♦DIC	♦ETC
	GESY	GSE
	IDC	INRB
	INRC	INRI
	INRJ	ITT
	MOTA	MSC
	SAR	SDI
	SSI	TEC
	TEK	TNC
1N1766,A	CODI	175-39
	♦DIC	♦ETC
	GESY	GSE
	IDC	INRB
	INRC	INRI
	INRJ	ITT
	MOTA	MSC
cont next col		

TYPE No.	MFRS	Pg&Line
1N1766,A (cont)	SAR	
	SDI	SSI
	TEC	TEK
	TNC	TRW
1N1767,A	APD	177-146
	CODI	♦DIC
	♦ETC	GESY
	GSE	IDC
	INRB	INRC
	INRI	INRJ
	ITT	MOTA
	MSC	SAR
	SCN	SDI
	SSI	TEC
	TEK	TNC
	TRW	UNI
1N1768,A	APD	180-14
	CODI	♦DIC
	♦ETC	GESY
	GSE	IDC
	INRB	INRC
	INRI	INRJ
	ITT	MOTA
	MSC	SAR
	SCN	SDI
	SSI	TEC
	TEK	TNC
	TRW	UNI
1N1769,A	APD	182-61
	CODI	♦DIC
	♦ETC	GESY
	GSE	IDC
	INRB	INRC
	INRI	INRJ
	ITT	MOTA
	MSC	SAR
	SCN	SDI
	SSI	TEC
	TEK	TNC
	TRW	UNI
1N1770,A	APD	185-171
	CODI	♦DIC
	♦ETC	GESY
	GSE	IDC
	INRB	INRC
	INRI	INRJ
	ITT	MOTA
	MSC	SAR
	SCN	SDI
	SSI	TEC
	TEK	TNC
	TRW	UNI
1N1771,A	APD	188-68
	ASC	CODI
	♦DIC	♦ETC
	GESY	GSE
	IDC	INRB
	INRC	INRI
	INRJ	ITT
	MOTA	MSC
	SAR	SCN
	SDI	SSI
	TEC	TEK
	TNC	TRW
1N1772,A	APD	190-65
	ASC	CODI
	♦DIC	♦ETC
	GESY	GSE
	IDC	INRB
	INRC	INRI
	INRJ	ITT
	MOTA	MSC
	SAR	SCN
	SDI	SSI
	TEC	TEK
	TNC	TRW
		UNI
1N1773,A	APD	192-136
	ASC	CODI
	♦DIC	♦ETC
	GESY	GSE
	IDC	INRB
	INRC	INRI
	INRJ	ITT
	MOTA	MSC
	SAR	SCN
	SDI	SSI
	TEC	TEK
	TNC	TRW
		UNI
1N1774,A	APD	195-4
	ASC	CODI
	♦DIC	♦ETC
	GESY	GSE
	IDC	INRB
	INRC	INRI
	INRJ	ITT
	MOTA	MSC
	SAR	SCN
	SDI	SSI
	TEC	TEK
	TNC	TRW
		UNI
1N1775,A	APD	197-153
	ASC	CODI
	♦DIC	♦ETC
	GESY	GSE
	IDC	INRB
	INRC	INRI
	INRJ	ITT
	MOTA	MSC
	SAR	SCN
	SDI	SSI
	TEC	TEK
cont next col		

TYPE No.	MFRS	Pg&Line
1N1775,A (cont)	SAR	
	SCN	SDI
	SSI	TEC
	TEK	TNC
	TRW	UNI
1N1776,A	APD	199-144
	ASC	CODI
	♦DIC	♦ETC
	GESY	GSE
	IDC	INRB
	INRC	INRI
	INRJ	ITT
	MOTA	MSC
	SAR	SCN
	SDI	SSI
	TEC	TEK
	TNC	TRW
1N1777,A	APD	202-61
	ASC	CODI
	♦DIC	♦ETC
	GSE	IDC
	INRB	INRC
	INRI	INRJ
	ITT	MOTA
	MSC	SAR
	SCN	SDI
	SSI	TEC
	TEK	TNC
	TRW	UNI
1N1778,A	APD	205-13
	ASC	CODI
	♦DIC	♦ETC
	GSE	IDC
	INRB	INRC
	INRI	INRJ
	ITT	MOTA
	MSC	SAR
	SCN	SDI
	SSI	TEC
	TEK	TNC
	TRW	UNI
1N1779,A	APD	206-173
	ASC	CODI
	♦DIC	♦ETC
	GSE	IDC
	INRB	INRC
	INRI	INRJ
	ITT	MOTA
	MSC	SAR
	SCN	SDI
	SSI	TEC
	TEK	TNC
	TRW	UNI
1N1780,A	APD	208-162
	ASC	CODI
	♦DIC	♦ETC
	GSE	IDC
	INRB	INRC
	INRI	INRJ
	ITT	MOTA
	MSC	SAR
	SCN	SDI
	SSI	TEC
	TEK	TNC
	TRW	UNI
1N1781,A	APD	211-54
	ASC	CODI
	♦DIC	♦ETC
	GSE	IDC
	INRB	INRC
	INRI	INRJ
	ITT	MOTA
	MSC	SAR
	SCN	SDI
	SSI	TEC
	TEK	TNC
	TRW	UNI
1N1782,A	APD	213-60
	ASC	CODI
	♦DIC	♦ETC
	GSE	IDC
	INRB	INRC
	INRI	INRJ
	ITT	MOTA
	MSC	SAR
	SCN	SDI
	SSI	TEC
	TEK	TNC
	TRW	UNI
1N1783,A	APD	215-23
	ASC	CODI
	♦DIC	♦ETC
	GSE	IDC
	INRB	INRC
	INRI	INRJ
	ITT	MOTA
	MSC	SAR
	SCN	SDI
	SSI	TEC
	TEK	TNC
	TRW	UNI
1N1784,A	ASC	216-136
	CODI	♦DIC
	♦ETC	GSE
	IDC	INRB
	INRC	INRI
	INRJ	ITT
	MOTA	MSC
	SAR	SCN
	SDI	SSI
	TEC	TEK
cont next col		

TYPE No.	MFRS	Pg&Line
1N1784,A (cont)	TNC	
	TRW	UNI
1N1785,A	ASC	218-33
	CODI	♦DIC
	♦ETC	GSE
	IDC	INRB
	INRC	INRI
	INRJ	ITT
	MOTA	MSC
	SAR	SCN
	SDI	SSI
	TEC	TEK
	TNC	TRW
		UNI
1N1786,A	ASC	219-114
	CODI	♦DIC
	♦ETC	GSE
	IDC	INRB
	INRC	INRI
	INRJ	ITT
	MOTA	MSC
	SAR	SCN
	SDI	SSI
	TEC	TEK
	TNC	TRW
		UNI
1N1787,A	ASC	221-48
	CODI	♦DIC
	♦ETC	GSE
	IDC	INRB
	INRC	INRI
	INRJ	ITT
	MOTA	MSC
	SAR	SCN
	SDI	SSI
	TEC	TEK
	TNC	UNI
1N1788,A	ASC	223-5
	CODI	♦DIC
	♦ETC	GSE
	IDC	INRB
	INRC	INRI
	INRJ	ITT
	MOTA	MSC
	SAR	SCN
	SDI	SSI
	TEC	TEK
	TNC	UNI
1N1789,A	ASC	224-78
	CODI	♦DIC
	♦ETC	GSE
	IDC	INRB
	INRC	INRI
	INRJ	ITT
	MOTA	MSC
	SAR	SCN
	SDI	SSI
	TEC	TEK
	TNC	UNI
1N1790,A	ASC	226-33
	CODI	♦DIC
	♦ETC	GSE
	IDC	INRB
	INRC	INRI
	INRJ	ITT
	MOTA	MSC
	SAR	SCN
	SDI	SSI
	TEC	TEK
	TNC	UNI
1N1791,A	ASC	227-87
	CODI	♦DIC
	♦ETC	GSE
	IDC	INRB
	INRC	INRI
	INRJ	ITT
	MOTA	MSC
	SAR	SCN
	SDI	SSI
	TEC	TEK
	TNC	UNI
1N1792,A	ASC	229-5
	CODI	♦DIC
	♦ETC	GSE
	IDC	INRB
	INRC	INRI
	INRJ	ITT
	MOTA	MSC
	SAR	SCN
	SDI	SSI
	TEC	TEK
	TNC	UNI
1N1793,A	ASC	230-83
	CODI	♦DIC
	♦ETC	GSE
	IDC	INRB
	INRC	INRI
	INRJ	ITT
	MOTA	MSC
	SAR	SCN
	SDI	SSI
	TEC	TEK
	TNC	UNI
1N1794,A	ASC	232-26
	CODI	♦DIC
	♦ETC	GSE
	IDC	INRB
	INRC	INRI
	INRJ	ITT
	MOTA	MSC
	SAR	SCN
	SDI	SSI
cont.next page		

△-Registered with JEDEC by this manufacturer

♦-Copy of mfr's data sheet may be ordered from D.A.T.A.

1. TYPE No. CROSS INDEX

IN TYPE NUMBER SEQUENCE

TYPE No	MFRS	Pg&Line
1N1794,A		
(cont)	TEC	
TEK	TNC	
	UNI	
1N1795,A	ASC	233 - 62
CODI	♦DIC	
♦ETC	GSE	
IDC	INRB	
INRC	INRI	
INRJ	ITT	
MOTA	MSC	
SAR	SCN	
SDI	SSI	
TEC	TEK	
TNC	UNI	
1N1796,A	CODI	235 - 34
♦DIC	♦ETC	
GSE	IDC	
INRB	INRC	
INRI	INRJ	
ITT	MOTA	
MSC	SAR	
SCN	SDI	
SSI	TEK	
TNC	UNI	
1N1797,A	CODI	236 - 57
♦DIC	♦ETC	
GSE	IDC	
INRB	INRC	
INRI	INRJ	
ITT	MOTA	
MSC	SAR	
SCN	SDI	
SSI	TEK	
TNC	UNI	
1N1798,A	CODI	237 - 97
♦DIC	♦ETC	
GSE	IDC	
INRB	INRC	
INRI	INRJ	
ITT	MOTA	
MSC	SAR	
SCN	SDI	
SSI	TEK	
TNC	UNI	
1N1799,A	CODI	239 - 71
♦DIC	♦ETC	
GSE	INRB	
INRC	INRI	
INRJ	ITT	
MOTA	MSC	
SAR	SCN	
SDI	SSI	
TEK	TNC	
	UNI	
1N1800,A	♦DIC	240-102
♦ETC	GSE	
INRB	INRC	
INRI	INRJ	
ITT	MOTA	
MSC	SAR	
SCN	SDI	
SSI	TEK	
TNC	UNI	
1N1801	♦DIC	242 - 38
♦ETC	GSE	
IDC	INRB	
INRC	INRI	
INRJ	ITT	
MOTA	MSC	
SAR	SCN	
SDI	SSI	
TEK	TNC	
	UNI	
1N1801A	♦DIC	242 - 39
♦ETC	GSE	
INRB	INRC	
INRI	INRJ	
ITT	MOTA	
MSC	SAR	
SCN	SDI	
SSI	TEK	
TNC	UNI	
1N1802,A	♦DIC	243 - 80
♦ETC	GSE	
INRB	INRC	
INRI	INRJ	
ITT	MOTA	
MSC	SAR	
SCN	SDI	
SSI	TEK	
TNC	UNI	
1N1803,A	♦DIC	173-135
GSE	IDC	
ITT	MOTA	
SAR	SDI	
SSI	TEC	
TNC	♦USS	
1N1803B	IDC	173-136
	SAR	
1N1803C,CA	♦DIC	173-137
1N1804,A	ASC	175-112
♦DIC	GSE	
IDC	ITT	
MOTA	SAR	
SDI	SSI	
TEC	TNC	
	♦USS	
1N1804B	IDC	175-113
	SAR	
1N1804C,CA	♦DIC	175-114
1N1805,A	ASC	178-116
♦DIC	GSE	

cont next col

TYPE No.	MFRS	Pg&Line
1N1805,A		
(cont)	IDC	
INRB	INRC	
INRI	INRJ	
ITT	MOTA	
SAR	SCN	
SDI	SSI	
TEC	TNC	
TRW	♦USS	
1N1805B	IDC	178-117
	SAR	
1N1805C,CA	♦DIC	178-118
1N1806,A	ASC	180-158
♦DIC	GSE	
IDC	INRB	
INRC	INRI	
INRJ	ITT	
MOTA	SAR	
SCN	SDI	
SSI	TEC	
TNC	TRW	
	♦USS	
1N1806B	IDC	180-159
	SAR	
1N1806C,CA	♦DIC	180-160
1N1807,A	ASC	183 - 28
♦DIC	EDI	
GSE	IDC	
INRB	INRC	
INRI	INRJ	
ITT	MOTA	
SAR	SCN	
SDI	SSI	
TEC	TNC	
TRW	♦USS	
1N1807B	SAR	183 - 29
1N1807C,CA	♦DIC	183 - 30
1N1808,A	ASC	186-142
♦DIC	EDI	
ESP	GSE	
IDC	INRB	
INRC	INRI	
INRJ	ITT	
MOTA	SAR	
SCN	SDI	
SSI	TEC	
TNC	TRW	
	♦USS	
1N1808B	IDC	186-143
	SAR	
1N1808C,CA	♦DIC	186-144
1N1809,A	ASC	235-130
♦DIC	EDI	
ESP	ETC	
GSE	IDC	
INRB	INRC	
INRI	INRJ	
ITT	MOTA	
SAR	SCN	
SDI	SSI	
TEC	TNC	
	♦USS	
1N1809B	IDC	235-131
	SAR	
1N1809C,CA	♦DIC	235-132
1N1810,A	ASC	236-163
♦DIC	EDI	
ESP	ETC	
GSE	IDC	
INRB	INRC	
INRI	INRJ	
ITT	MOTA	
SAR	SCN	
SDI	SSI	
TEC	TNC	
	♦USS	
1N1810B	IDC	236-164
	SAR	
1N1810C,CA	♦DIC	236-165
1N1811,A	ASC	238 - 21
♦DIC	EDI	
ESP	ETC	
GSE	IDC	
INRB	INRC	
INRI	INRJ	
ITT	MOTA	
SAR	SCN	
SDI	SSI	
TEC	TNC	
	♦USS	
1N1811B	IDC	238 - 22
	SAR	
1N1811C,CA	♦DIC	238 - 23
1N1812,A	ASC	240 - 7
♦DIC	EDI	
ESP	ETC	
GSE	INRB	
INRC	INRI	
INRJ	ITT	
MOTA	SAR	
SCN	SDI	
SSI	TEC	
TNC	♦USS	
1N1812B	SAR	240 - 8
1N1812C,CA	♦DIC	240 - 9
1N1813,A	ASC	241 - 19
♦DIC	EDI	
ESP	ETC	
GSE	INRB	
INRC	INRI	
INRJ	ITT	
MOTA	SAR	
SCN	SDI	

cont next col

TYPE No.	MFRS	Pg&Line
1N1813,A		
(cont)	SSI	
TEC	TNC	
	♦USS	
1N1813B	SAR	241 - 20
1N1813C,CA	♦DIC	241 - 21
1N1814,A	ASC	242-136
♦DIC	EDI	
ESP	ETC	
GSE	INRB	
INRC	INRI	
INRJ	ITT	
MOTA	SAR	
SCN	SDI	
SSI	TEC	
TNC	♦USS	
1N1814B	SAR	242-137
1N1814C,CA	♦DIC	242-138
1N1815,A	ASC	243-173
♦DIC	EDI	
ESP	ETC	
GSE	INRB	
INRC	INRI	
INRJ	ITT	
MOTA	SAR	
SCN	SDI	
SSI	TEC	
TNC	♦USS	
1N1815B	SAR	243-174
1N1815C,CA	♦DIC	244 - 1
1N1816	ASC	195-157
DIC	EDI	
ESP	ETC	
GSE	IDC	
INRB	INRC	
INRI	INRJ	
ITT	MOTA	
SAR	SCN	
SDI	SSI	
TEC	TII	
TIID	TIIF	
TNC	USS	
1N1816A	ASC	195-158
DIC	EDI	
ESP	ETC	
GSE	IDC	
INRB	INRC	
INRI	INRJ	
ITT	MOTA	
SAR	SDI	
SSI	TEC	
TII	TIID	
TIIF	TNC	
	USS	
1N1816C,CA	♦DIC	195-159
GSE	MOTA	
TII	TIID	
TIIF	USS	
1N1817	ASC	198-137
DIC	EDI	
ESP	ETC	
GSE	IDC	
INRB	INRC	
INRI	INRJ	
ITT	MOTA	
SAR	SCN	
SDI	SSI	
TEC	TII	
TIIB	TIID	
TIIF	TNC	
	USS	
1N1817A	ASC	198-138
DIC	EDI	
ESP	ETC	
GSE	IDC	
INRB	INRC	
INRI	INRJ	
ITT	MOTA	
SAR	SDI	
SSI	TEC	
TII	TIIB	
TIID	TIIF	
TNC	USS	
1N1817C,CA	♦DIC	198-139
GSE	MOTA	
TII	TIIB	
TIID	TIIF	
	USS	
1N1818	ASC	200 - 96
DIC	EDI	
ESP	ETC	
GSE	IDC	
INRB	INRC	
INRI	INRJ	
ITT	MOTA	
SAR	SCN	
SDI	SSI	
TEC	TII	
TIIB	TIID	
TIIF	TNC	
	USS	
1N1818A	ASC	200 - 97
DIC	EDI	
ESP	ETC	
GSE	IDC	
INRB	INRC	
INRI	INRJ	
ITT	MOTA	
SAR	SDI	
SSI	TEC	
TII	TIIB	
TIID	TIIF	
TNC	USS	

TYPE No.	MFRS	Pg&Line
1N1818C,CA	♦DIC	200 - 98
GSE	MOTA	
TII	TIIB	
TIID	TIIF	
	USS	
1N1819	ASC	203 - 29
DIC	EDI	
ESP	ETC	
GSE	IDC	
INRB	INRC	
INRI	INRJ	
ITT	MOTA	
SAR	SCN	
SDI	SSI	
TEC	TII	
TIIB	TIID	
TIIF	TNC	
	USS	
1N1819A	ASC	203 - 30
DIC	EDI	
ESP	ETC	
GSE	IDC	
INRB	INRC	
INRI	INRJ	
ITT	MOTA	
SAR	SDI	
SSI	TEC	
TII	TIIB	
TIID	TIIF	
TNC	USS	
1N1819C,CA	♦DIC	203 - 31
GSE	MOTA	
TII	TIIB	
TIID	TIIF	
	USS	
1N1820	ASC	205-163
DIC	EDI	
ESP	ETC	
GSE	IDC	
INRB	INRC	
INRI	INRJ	
ITT	MOTA	
SAR	SCN	
SDI	SSI	
TEC	TII	
TIIB	TIID	
TIIF	TNC	
	USS	
1N1820A	ASC	205-164
DIC	EDI	
ESP	ETC	
GSE	IDC	
INRB	INRC	
INRI	INRJ	
ITT	MOTA	
SAR	SCN	
SDI	SSI	
TEC	TII	
TIIB	TIID	
TIIF	TNC	
	USS	
1N1820C,CA	♦DIC	205-165
GSE	MOTA	
TII	TIIB	
TIID	TIIF	
	USS	
1N1821	ASC	207-152
DIC	EDI	
ESP	ETC	
GSE	IDC	
INRB	INRC	
INRI	INRJ	
ITT	MOTA	
SAR	SCN	
SDI	SSI	
TEC	TII	
TIIB	TIID	
TIIF	TNC	
	USS	
1N1821A	ASC	207-153
DIC	EDI	
ESP	ETC	
GSE	IDC	
INRB	INRC	
INRI	INRJ	
ITT	MOTA	
SAR	SDI	
SSI	TEC	
TII	TIIB	
TIID	TIIF	
TNC	USS	
1N1821C,CA	♦DIC	207-154
GSE	MOTA	
TII	TIIB	
TIID	TIIF	
	USS	
1N1822	ASC	209-124
DIC	EDI	
ESP	ETC	
GSE	IDC	
INRB	INRC	
INRI	INRJ	
ITT	MOTA	
SAR	SCN	
SDI	SSI	
TEC	TII	
TIIB	TIID	
TIIF	TNC	
	USS	
1N1822A	ASC	209-125
DIC	EDI	
ESP	ETC	
GSE	IDC	
INRB	INRC	

cont next col.

TYPE No.	MFRS	Pg&Line
1N1822A		
(cont.)	INRI	
INRJ	ITT	
MOTA	SAR	
SDI	SSI	
TEC	TII	
TIIB	TIID	
TIIF	TNC	
	USS	
1N1822C,CA	♦DIC	209-126
GSE	MOTA	
TII	TIIB	
TIID	TIIF	
	USS	
1N1823	ASC	212 - 23
DIC	EDI	
ESP	ETC	
GSE	IDC	
INRB	INRC	
INRI	INRJ	
ITT	MOTA	
SAR	SCN	
SDI	SSI	
TEC	TII	
TIIB	TIID	
TIIF	TNC	
	USS	
1N1823A	ASC	212 - 24
DIC	EDI	
ESP	ETC	
GSE	IDC	
INRB	INRC	
INRI	INRJ	
ITT	MOTA	
SAR	SDI	
SSI	TEC	
TII	TIIB	
TIID	TIIF	
TNC	USS	
1N1823C,CA	♦DIC	212 - 25
GSE	MOTA	
TII	TIIB	
TIID	TIIF	
	USS	
1N1824	ASC	214 - 24
DIC	EDI	
ESP	ETC	
GSE	IDC	
INRB	INRC	
INRI	INRJ	
ITT	MOTA	
SAR	SCN	
SDI	SSI	
TEC	TII	
TIIB	TIID	
TIIF	TNC	
	USS	
1N1824A	ASC	214 - 25
DIC	EDI	
ESP	ETC	
GSE	IDC	
INRB	INRC	
INRI	INRJ	
ITT	MOTA	
SAR	SDI	
SSI	TEC	
TII	TIIB	
TIID	TIIF	
TNC	USS	
1N1824C,CA	♦DIC	214 - 26
GSE	MOTA	
TII	TIIB	
TIID	TIIF	
	USS	
1N1825	ASC	215-181
DIC	EDI	
ESP	ETC	
GSE	IDC	
INRB	INRC	
INRI	INRJ	
ITT	MOTA	
SAR	SCN	
SDI	SSI	
TEC	TII	
TIIB	TIID	
TIIF	TNC	
	USS	
1N1825A	ASC	215-182
DIC	EDI	
ESP	ETC	
GSE	IDC	
INRB	INRC	
INRI	INRJ	
ITT	MOTA	
SAR	SDI	
SSI	TEC	
TII	TIIB	
TIID	TIIF	
TNC	USS	
1N1825C,CA	♦DIC	215-183
GSE	MOTA	
TII	TIIB	
TIID	TIIF	
	USS	
1N1826	ASC	217 - 73
DIC	EDI	
ESP	ETC	
GSE	INRB	
INRC	INRI	
INRJ	ITT	
MOTA	SAR	
SCN	SDI	
SSI	TEC	

cont next page

Δ-Registered with JEDEC by this manufacturer

♦-Copy of mfr's data sheet may be ordered from D.A.T.A.

1. TYPE No. CROSS INDEX

IN TYPE NUMBER SEQUENCE

TYPE No.	MFRS	Pg&Line
1N1826		
(cont)	TII	
TIIB	TIID	
TIIF	TNC	
	USS	
1N1826A	ASC	217 - 74
DIC	EDI	
ESP	ETC	
GSE	INRB	
INRC	INRI	
INRJ	ITT	
MOTA	SAR	
SDI	SSI	
TEC	TII	
TIIB	TIID	
TIIF	TNC	
	USS	
1N1826C,CA	♦ DIC	217 - 75
GSE	MOTA	
TII	TIIB	
TIID	TIIF	
	USS	
1N1827	ASC	218 -143
DIC	EDI	
ESP	ETC	
GSE	IDC	
INRB	INRC	
INRI	INRJ	
ITT	MOTA	
SAR	SCN	
SDI	SSI	
TEC	TII	
TIIB	TIID	
TIIF	TNC	
	USS	
1N1827A	ASC	218 -144
DIC	EDI	
ESP	ETC	
GSE	IDC	
INRB	INRC	
INRI	INRJ	
ITT	MOTA	
SAR	SDI	
SSI	TEC	
TII	TIIB	
TIID	TIIF	
TNC	USS	
1N1827C,CA	♦ DIC	218 -145
GSE	MOTA	
TII	TIIB	
TIID	TIIF	
	USS	
1N1828	ASC	220 - 34
DIC	EDI	
ESP	ETC	
GSE	IDC	
INRB	INRC	
INRI	INRJ	
ITT	MOTA	
SAR	SCN	
SDI	SSI	
TEC	TII	
TIIB	TIID	
TIIF	TNC	
	USS	
1N1828A	ASC	220 - 35
DIC	EDI	
ESP	ETC	
GSE	IDC	
INRB	INRC	
INRI	INRJ	
ITT	MOTA	
SAR	SDI	
SSI	TEC	
TII	TIIB	
TIID	TIIF	
TNC	USS	
1N1828C,CA	♦ DIC	220 - 36
GSE	MOTA	
TII	TIIB	
TIID	TIIF	
	USS	
1N1829	ASC	221 -166
DIC	EDI	
ESP	ETC	
GSE	IDC	
INRB	INRC	
INRI	INRJ	
ITT	MOTA	
SAR	SCN	
SDI	SSI	
TEC	TII	
TIIB	TIID	
TIIF	TNC	
	USS	
1N1829A	ASC	221 -167
DIC	EDI	
ESP	ETC	
GSE	IDC	
INRB	INRC	
INRI	INRJ	
ITT	MOTA	
SAR	SDI	
SSI	TEC	
TII	TIIB	
TIID	TIIF	
TNC	USS	
1N1829C,CA	♦ DIC	221 -168
GSE	MOTA	
TII	TIIB	
TIID	TIIF	
	USS	
1N1830	ASC	223 -105
cont next col		

TYPE No.	MFRS	Pg&Line
1N1830		
(cont)	DIC	
EDI	ESP	
ETC	GSE	
IDC	INRB	
INRC	INRI	
INRJ	ITT	
MOTA	SAR	
SCN	SDI	
SSI	TEC	
TII	TIIB	
TIID	TIIF	
TNC	USS	
1N1830A	ASC	223 -106
DIC	EDI	
ESP	ETC	
GSE	IDC	
INRB	INRC	
INRI	INRJ	
ITT	MOTA	
SAR	SCN	
SDI	SSI	
TEC	TII	
TIIB	TIID	
TIIF	TNC	
	USS	
1N1830C,CA	♦ DIC	223 -107
GSE	MOTA	
TII	TIIB	
TIID	TIIF	
	USS	
1N1831	ASC	225 - 23
DIC	EDI	
ESP	ETC	
GSE	IDC	
INRB	INRC	
INRI	INRJ	
ITT	MOTA	
SAR	SCN	
SDI	SSI	
TEC	TII	
TIIB	TIID	
TIIF	TNC	
	USS	
1N1831A	ASC	225 - 24
DIC	EDI	
ESP	ETC	
GSE	IDC	
INRB	INRC	
INRI	INRJ	
ITT	MOTA	
SAR	SDI	
SSI	TEC	
TII	TIIB	
TIID	TIIF	
TNC	USS	
1N1831C,CA	♦ DIC	225 - 25
GSE	MOTA	
TII	TIIB	
TIID	TIIF	
	USS	
1N1832	ASC	226 -137
DIC	EDI	
ESP	ETC	
GSE	IDC	
INRB	INRC	
INRI	INRJ	
ITT	MOTA	
SAR	SCN	
SDI	SSI	
TEC	TII	
TIIB	TIID	
TIIF	TNC	
	USS	
1N1832A	ASC	226 -138
DIC	EDI	
ESP	ETC	
GSE	IDC	
INRB	INRC	
INRI	INRJ	
ITT	MOTA	
SAR	SDI	
SSI	TEC	
TII	TIIB	
TIID	TIIF	
TNC	USS	
1N1832C,CA	♦ DIC	226 -139
GSE	MOTA	
TII	TIIB	
TIID	TIIF	
	USS	
1N1833	ASC	228 - 20
DIC	EDI	
ESP	ETC	
GSE	IDC	
INRB	INRC	
INRI	INRJ	
ITT	MOTA	
SAR	SCN	
SDI	SSI	
TEC	TII	
TIIB	TIID	
TIIF	TNC	
	USS	
1N1833A	ASC	228 - 21
DIC	EDI	
ESP	ETC	
GSE	IDC	
INRB	INRC	
INRI	INRJ	
ITT	MOTA	
SAR	SDI	
SSI	TEC	
TII	TIIB	
TIID	TIIF	
TNC	USS	
cont next col		

TYPE No.	MFRS	Pg&Line
1N1833A		
(cont)	TIID	
TIIF	TNC	
	USS	
1N1833C,CA	♦ DIC	228 - 22
GSE	MOTA	
TII	TIIB	
TIID	TIIF	
	USS	
1N1834	ASC	229 -121
DIC	EDI	
ESP	ETC	
GSE	IDC	
INRB	INRC	
INRI	INRJ	
ITT	MOTA	
SAR	SCN	
SDI	SSI	
TEC	TII	
TIIB	TIID	
TIIF	TNC	
	USS	
1N1834A	ASC	229 -122
DIC	EDI	
ESP	ETC	
GSE	IDC	
INRB	INRC	
INRI	INRJ	
ITT	MOTA	
SAR	SDI	
SSI	TEC	
TII	TIIB	
TIID	TIIF	
TNC	USS	
1N1834C,CA	♦ DIC	229 -123
GSE	MOTA	
TII	TIIB	
TIID	TIIF	
	USS	
1N1835	ASC	231 - 9
DIC	EDI	
ESP	ETC	
GSE	INRB	
INRC	INRI	
INRJ	ITT	
MOTA	SAR	
SCN	SDI	
SSI	TEC	
TII	TIIB	
TIID	TIIF	
TNC	USS	
1N1835A	ASC	231 - 10
DIC	EDI	
ESP	ETC	
GSE	INRB	
INRC	INRI	
INRJ	ITT	
MOTA	SAR	
SDI	SSI	
TEC	TII	
TIIB	TIID	
TIIF	TNC	
	USS	
1N1835C,CA	♦ DIC	231 - 11
GSE	MOTA	
TII	TIIB	
TIID	TIIF	
	USS	
1N1836	ASC	232 -121
DIC	EDI	
ESP	ETC	
GSE	IDC	
INRB	INRC	
INRI	INRJ	
ITT	MOTA	
SAR	SCN	
SDI	SSI	
TEC	TII	
TIIB	TIID	
TIIF	TNC	
	USS	
1N1836A	ASC	232 -122
DIC	EDI	
ESP	ETC	
GSE	IDC	
INRB	INRC	
INRI	INRJ	
ITT	MOTA	
SAR	SDI	
SSI	TEC	
TII	TIIB	
TIID	TIIF	
TNC	USS	
1N1836C,CA	♦ DIC	232 -123
GSE	MOTA	
TII	TIIB	
TIID	TIIF	
	USS	
1N1838	△ PHIL	515 - 39
	SCA	
JAN1N1838	none	514 - 94
1N1839	SCA	246 - 23
SSI	UPI	
1N1840	SCA	246 - 46
SSI	UPI	
1N1841	SCA	246 - 75
SSI	UPI	
1N1842	SCA	247 - 37
SSI	UPI	
1N1843	SCA	248 - 58
SSI	UPI	
1N1844	SCA	249 - 74
SSI	UPI	

TYPE No.	MFRS	Pg&Line
1N1845	SCA	251 - 65
SSI	UPI	
1N1846	SCA	253 - 68
	SSI	
1N1847	SCA	255 - 60
	SSI	
1N1848	SCA	257 - 92
	SSI	
1N1849	SCA	259 - 7
	SSI	
1N1850	SCA	259 - 90
	SSI	
1N1875	△ USS	182 - 62
CODI	DIC	
GSE	ITT	
MSC	SAR	
SCN	SDI	
SSI	TEK	
TNC	TRW	
	UNI	
1N1875A	CODI	182 - 63
DIC	GSE	
ITT	MSC	
SAR	SDI	
TEK	TNC	
TRW	UNI	
	USS	
1N1875B	♦ DIC	183 - 82
	IDC	
1N1876	△ USS	188 - 69
CODI	DIC	
GSE	IDC	
ITT	MSC	
SAR	SCN	
SDI	SSI	
TEK	TNC	
TRW	UNI	
1N1876A	CODI	188 - 70
DIC	GSE	
IDC	ITT	
MSC	SAR	
SDI	TEK	
TNC	TRW	
UNI	USS	
1N1876B	♦ DIC	188 - 71
1N1877	△ USS	192 -137
CODI	DIC	
GSE	ITT	
MSC	SAR	
SCN	SDI	
SSI	TEK	
TNC	TRW	
	UNI	
1N1877A	CODI	192 -138
DIC	GSE	
ITT	MSC	
SAR	SDI	
TEK	TNC	
TRW	UNI	
	USS	
1N1877B	♦ DIC	192 -139
	IDC	
1N1878	△ USS	197 -154
CODI	DIC	
GSE	ITT	
MSC	SAR	
SCN	SDI	
SSI	TEK	
TNC	TRW	
	UNI	
1N1878A	CODI	197 -155
DIC	GSE	
ITT	MSC	
SAR	SDI	
TEK	TNC	
TRW	UNI	
	USS	
1N1878B	♦ DIC	197 -156
	IDC	
1N1879	△ USS	202 - 62
CODI	DIC	
GSE	ITT	
MSC	SAR	
SCN	SDI	
SSI	TEK	
TNC	TRW	
	UNI	
1N1879A	CODI	202 - 63
DIC	GSE	
ITT	MSC	
SAR	SDI	
TEK	TNC	
TRW	UNI	
	USS	
1N1879B	♦ DIC	202 - 64
	IDC	
1N1880	△ USS	206 -174
CODI	DIC	
GSE	ITT	
MSC	SAR	
SCN	SDI	
SSI	TEK	
TNC	TRW	
	UNI	
1N1880A	CODI	206 -175
DIC	GSE	
ITT	MSC	
SAR	SDI	
TEK	TNC	
TRW	UNI	
	USS	
1N1880B	♦ DIC	206 -176
	IDC	

TYPE No.	MFRS	Pg&Line
1N1881	△ USS	211 - 55
CODI	DIC	
GSE	ITT	
MSC	SAR	
SCN	SDI	
SSI	TEK	
TNC	TRW	
	UNI	
1N1881A	CODI	211 - 56
DIC	GSE	
ITT	MSC	
SAR	SDI	
TEK	TNC	
TRW	UNI	
	USS	
1N1881B	♦ DIC	211 - 57
	IDC	
1N1882	△ USS	215 - 24
CODI	DIC	
GSE	ITT	
MSC	SAR	
SCN	SDI	
SSI	TEK	
TNC	TRW	
	UNI	
1N1882A	CODI	215 - 25
DIC	GSE	
ITT	MSC	
SAR	SDI	
TEK	TNC	
TRW	UNI	
	USS	
1N1882B	♦ DIC	215 - 26
	IDC	
1N1883	△ USS	218 - 34
CODI	DIC	
GSE	ITT	
MSC	SAR	
SCN	SDI	
SSI	TEK	
TNC	TRW	
	UNI	
1N1883A	CODI	218 - 35
DIC	GSE	
ITT	MSC	
SAR	SDI	
TEK	TNC	
TRW	UNI	
	USS	
1N1883B	♦ DIC	218 -193
	IDC	
1N1884	△ USS	221 - 49
CODI	DIC	
GSE	ITT	
MSC	SAR	
SCN	SDI	
SSI	TEK	
TNC	UNI	
1N1884A	CODI	221 - 50
DIC	GSE	
ITT	MSC	
SAR	SDI	
TEK	TNC	
UNI	USS	
1N1884B	♦ DIC	221 - 51
	IDC	
1N1885	△ USS	224 - 79
CODI	DIC	
GSE	ITT	
MSC	SAR	
SCN	SDI	
SSI	TEK	
TNC	UNI	
1N1885A	CODI	224 - 80
DIC	GSE	
ITT	MSC	
SAR	SDI	
TEK	TNC	
UNI	USS	
1N1885B	♦ DIC	225 - 77
	IDC	
1N1886	△ USS	227 - 88
CODI	DIC	
GSE	ITT	
MSC	SAR	
SCN	SDI	
SSI	TEK	
TNC	UNI	
1N1886A	CODI	227 - 89
DIC	GSE	
ITT	MSC	
SAR	SDI	
TEK	TNC	
UNI	USS	
1N1886B	♦ DIC	228 - 69
	IDC	
1N1887	△ USS	230 - 84
CODI	DIC	
GSE	ITT	
MSC	SAR	
SCN	SDI	
SSI	TEK	
TNC	UNI	
1N1887A	CODI	230 - 85
DIC	GSE	
ITT	MSC	
SAR	SDI	
TEK	TNC	
UNI	USS	
1N1887B	♦ DIC	231 -105
	IDC	
1N1888	△ USS	233 - 63
CODI	DIC	
cont.next page		

△-Registered with JEDEC by this manufacturer

♦-Copy of mfr's data sheet may be ordered from D.A.T.A.

1. TYPE No. CROSS INDEX

IN TYPE NUMBER SEQUENCE

TYPE No	MFRS	Pg&Line
1N1888		
(cont)	GSE	
	ITT	
	MSC	
	SAR	
	SCN	
	SDI	
	SSI	
	TEK	
	TNC	
	UNI	
1N1888A	CODI	233 - 64
	DIC	
	GSE	
	ITT	
	MSC	
	SAR	
	SDI	
	TEK	
	TNC	
	UNI	
	USS	
1N1888B	♦DIC	232-175
1N1889	IDC	236-120
	SSI	
	TNC	
1N1889A	IDC	236-121
	TNC	
1N1889B	IDC	236-122
	TNC	
1N1890	IDC	239 - 6
	SSI	
	TNC	
1N1890A	IDC	239 - 7
	TNC	
1N1890B	IDC	239 - 8
	TNC	
1N1891	△USS	183 - 31
	SSI	
1N1891A	USS	183 - 32
1N1892	△USS	189 - 45
	SSI	
1N1892A	USS	189 - 46
1N1893	△USS	193-136
	SSI	
1N1893A	USS	193-137
1N1894	△USS	198-140
	IDC	
	SSI	
1N1894A	IDC	198-141
	USS	
1N1895	△USS	203 - 32
	SSI	
1N1895A	USS	203 - 33
1N1896	△USS	207-155
	SSI	
1N1896A	USS	207-156
1N1897	△USS	212 - 26
	SSI	
1N1897A	USS	212 - 27
1N1898	△USS	215-184
	IDC	
	SSI	
1N1898A	IDC	215-185
	USS	
1N1899	△USS	218-146
	IDC	
	SSI	
1N1899A	IDC	218-147
	USS	
1N1900	△USS	221-169
	SSI	
1N1900A	USS	221-170
1N1901	△USS	225 - 26
	SSI	
1N1901A	USS	225 - 27
1N1902	△USS	228 - 23
	IDC	
	SSI	
1N1902A	IDC	228 - 24
	USS	
1N1903	△USS	231 - 12
	SSI	
1N1903A	USS	231 - 13
1N1904	△USS	234 - 11
	SSI	
1N1904A	USS	234 - 12
1N1907	EDL	294 - 72
	IDC	
	INRB	
	INRC	
	INRI	
	INRJ	
	ITT	
	SCN	
	SES	
	SSI	
	TNC	
	UPI	
1N1908	EDL	301 - 68
	INRB	
	INRC	
	INRI	
	INRJ	
	ITT	
	SCN	
	SSI	
	SES	
	SYN	
	TNC	
	UPI	
1N1909	EDL	312 - 67
	INRB	
	INRC	
	INRI	
	INRJ	
	ITT	
	SCN	
	SSI	
	SES	
	SYN	
	TNC	
	UPI	
1N1910	INRB	322 - 31
	INRC	
	INRI	
	INRJ	
	ITT	
	SCN	
	SES	
	SSI	
	SYN	
	TNC	
	UPI	
1N1911	EDL	331 - 52
	INRB	
	INRC	
	INRI	
	INRJ	
	ITT	
	SCN	
	SES	
	SSI	
	SYN	
	TNC	
	UPI	
1N1912	EDL	341 - 2
	IDC	
	INRB	
	INRC	
	INRI	
	INRJ	
	ITT	
	SCN	
	SES	
	SSI	
	SYN	
	TNC	

TYPE No.	MFRS	Pg&Line
1N1913	EDL	348 - 77
	INRB	
	INRC	
	INRI	
	INRJ	
	ITT	
	SCN	
	SES	
	SSI	
	SYN	
	TNC	
1N1914	EDL	355-106
	IDC	
	INRB	
	INRC	
	INRI	
	INRJ	
	ITT	
	SCN	
	SES	
	SSI	
	SYN	
	TNC	
1N1915	EDL	361 - 48
	INRB	
	INRC	
	INRI	
	INRJ	
	ITT	
	QUA	
	SCN	
	SES	
	SSI	
	SYN	
	TNC	
1N1916	EDL	367 - 19
	INRB	
	INRC	
	INRI	
	INRJ	
	ITT	
	QUA	
	SCN	
	SES	
	SSI	
	SYN	
	TNC	
1N1917	IDC	295 - 87
	SSI	
1N1927,A,B	CODI	168 - 64
	IDC	
	MSC	
	SDI	
	SSI	
	WSI	
1N1928,A,B	CODI	170 - 48
	IDC	
	MSC	
	SDI	
	SSI	
	WSI	
1N1929	BNT	172-105
	CODI	
	IDC	
	MSC	
	SDI	
	SSI	
	TSC	
	WSI	
1N1929A	BNT	172-106
	CODI	
	IDC	
	MSC	
	SDI	
	TSC	
	WSI	
1N1929B	BNT	172-107
	CODI	
	IDC	
	MSC	
	SDI	
	TSC	
	WSI	
1N1930	CODI	176-200
	IDC	
	MSC	
	SDI	
	SSI	
	TSC	
	WSI	
1N1930A	CODI	176-201
	IDC	
	MSC	
	SDI	
	TSC	
	WSI	
1N1930B	CODI	176-202
	IDC	
	MSC	
	SDI	
	TSC	
	WSI	
1N1931	CODI	181 - 88
	IDC	
	ITT	
	MSC	
	SDI	
	SSI	
	TSC	
	WSI	
1N1931A	CODI	181 - 89
	IDC	
	ITT	
	MSC	
	SDI	
	TSC	
	WSI	
1N1931B	CODI	181 - 90
	IDC	
	ITT	
	MSC	
	SDI	
	TSC	
	WSI	
1N1932	CODI	187 - 78
	IDC	
	ITT	
	MSC	
	SDI	
	SSI	
	TSC	
	WSI	
1N1932A	CODI	187 - 79
	IDC	
	ITT	
	MSC	
	SDI	
	TSC	
	WSI	
1N1932B	CODI	187 - 80
	IDC	
	ITT	
	MSC	
	SDI	
	TSC	
	WSI	
1N1933	CODI	191-162
	ITT	
	MSC	
	SDI	
	SSI	
	TSC	
	WSI	
1N1933A	CODI	191-163
	ITT	
	MSC	
	SDI	
	TSC	
	WSI	
1N1933B	CODI	191-164
	ITT	
	MSC	
	SDI	
	TSC	
	WSI	
1N1934	CODI	197 - 2
	ITT	
	MSC	
	SDI	
	SSI	
	TSC	
	WSI	
1N1934A	CODI	197 - 3
	ITT	
	MSC	
	SDI	
	TSC	
	WSI	
1N1934B	CODI	197 - 4
	ITT	
	MSC	
	SDI	
	TSC	
	WSI	
1N1935,A,B	CODI	201 - 88
cont next col		

TYPE No.	MFRS	Pg&Line
1N1935,A,B		
(cont)	ITT	
	MSC	
	SDI	
	SSI	
	TSC	
	WSI	
1N1936,A,B	CODI	206 - 37
	ITT	
	MSC	
	SDI	
	SSI	
	TSC	
	WSI	
1N1937,A,B	BNT	210-107
	CODI	
	ITT	
	MSC	
	SDI	
	SSI	
	TSC	
	WSI	
1N1938,A,B	ITT	214 - 93
	MSC	
	SDI	
	SSI	
	WSI	
1N1939,A,B	MSC	217-135
	SDI	
	SSI	
	WSI	
1N1940,A,B	MSC	220-160
	SDI	
	SSI	
	WSI	
1N1941,A,B	MSC	224 - 11
	SDI	
	SSI	
	WSI	
1N1942,A,B	MSC	227 - 19
	SDI	
	SSI	
	WSI	
1N1943,A,B	MSC	230 - 19
	SDI	
	SSI	
	WSI	
1N1944,A,B	MSC	232-191
	SDI	
	SSI	
	WSI	
1N1945,A,B	IDC	235-175
	MSC	
	SDI	
1N1946,A,B	MSC	239 - 4
	SDI	
1N1947,A,B	MSC	241-147
	SDI	
1N1948	IDC	244 - 28
	MSC	
	SDI	
1N1948A	MSC	244 - 29
	SDI	
1N1948B	MSC	244 - 30
	SDI	
1N1949	IDC	244-103
	MSC	
	SDI	
1N1949A	MSC	244-104
	SDI	
1N1949B	MSC	244-105
	SDI	
1N1950	IDC	244-156
	MSC	
	SDI	
1N1950A	MSC	244-157
	SDI	
1N1950B	MSC	244-158
	SDI	
1N1951	IDC	245 - 12
	MSC	
	SDI	
1N1951A	MSC	245 - 13
	SDI	
1N1951B	MSC	245 - 14
	SDI	
1N1952	IDC	245 - 32
	MSC	
	SDI	
1N1952A	MSC	245 - 33
	SDI	
1N1952B	MSC	245 - 34
	SDI	
1N1953	IDC	245 - 38
	MSC	
	SDI	
1N1953A	MSC	245 - 39
	SDI	
1N1953B	MSC	245 - 40
	SDI	
1N1954,A,B	CODI	169 - 25
	IDC	
	SDI	
1N1955,A,B	CODI	170 - 80
	IDC	
	SDI	
1N1956,A,B	CODI	173-151
	IDC	
	INRB	
	INRC	
	INRI	
	INRJ	
	SAR	
	SDI	
	WSI	
1N1957,A,B	CODI	178-161
	IDC	
	INRB	
	INRC	
	INRI	
	INRJ	
	SAR	
	SDI	
	WSI	
1N1958,A,B	CODI	183 - 79
	IDC	
	INRB	
	INRC	
	INRI	
	INRJ	
	SAR	
	SDI	
	WSI	
1N1959,A,B	CODI	187 - 51
	IDC	
	INRB	
	INRC	
	INRI	
	INRJ	
	SAR	
	SDI	
	WSI	
1N1960,A,B	CODI	192 - 4
	IDC	
	INRB	
	INRC	
	INRI	
	INRJ	
	SAR	
	SDI	
	WSI	
1N1961	CODI	196-162
	IDC	
	INRB	
	INRC	
	INRI	
	INRJ	
	SAR	
	SDI	
	WSI	
1N1961A	CODI	196-163
	IDC	
	INRB	
cont next col.		

TYPE No.	MFRS	Pg&Line
1N1961A		
(cont)	INRC	
	INRI	
	INRJ	
	SAR	
	SDI	
	WSI	
1N1961B	CODI	196-164
	INRB	
	INRC	
	INRI	
	INRJ	
	SAR	
	SDI	
	WSI	
1N1962,A,B	CODI	201-121
	IDC	
	INRB	
	INRC	
	INRI	
	INRJ	
	SAR	
	SDI	
	WSI	
1N1963,A,B	CODI	206 - 63
	IDC	
	INRB	
	INRC	
	INRI	
	INRJ	
	SAR	
	SDI	
	WSI	
1N1964,A,B	CODI	210-128
	IDC	
	INRB	
	INRC	
	INRI	
	INRJ	
	SAR	
	SDI	
	WSI	
1N1965,A,B	IDC	214-114
	INRB	
	INRC	
	INRI	
	INRJ	
	SAR	
	SDI	
	WSI	
1N1966	SDI	218-191
1N1967	SDI	220-173
1N1968	SDI	225 - 75
1N1969	SDI	228 - 66
1N1970	SDI	231 - 54
1N1981	△USS	168 - 56
	CODI	
	CRL	
	♦DIC	
	GIC	
	IDC	
	MSC	
	SCA	
	SDI	
	SSI	
	WSI	
1N1981A	CODI	168 - 57
	CRL	
	♦DIC	
	GIC	
	IDC	
	MSC	
	SCA	
	SDI	
	SSI	
	USS	
	WSI	
1N1981B	CODI	168 - 58
	CRL	
	♦DIC	
	GIC	
	IDC	
	MSC	
	SDI	
	SSI	
	USS	
	WSI	
1N1982	△USS	170 - 39
	CODI	
	CRL	
	♦DIC	
	GIC	
	IDC	
	MSC	
	SCA	
	SDI	
	SSI	
	WSI	
1N1982A	CODI	170 - 40
	CRL	
	♦DIC	
	GIC	
	IDC	
	MSC	
	SCA	
	SDI	
	SSI	
	USS	
	WSI	
1N1982B	CODI	170 - 41
	CRL	
	♦DIC	
	GIC	
	IDC	
	MSC	
	SDI	
	SSI	
	USS	
	WSI	
1N1983	△USS	172 - 96
	CODI	
	CRL	
	♦DIC	
	GIC	
	IDC	
	MSC	
	SCA	
	SDI	
	SSI	
	WSI	
1N1983A	CODI	172 - 97
	CRL	
	♦DIC	
	GIC	
	IDC	
	MSC	
	SCA	
	SDI	
	SSI	
	USS	
	WSI	
1N1983B	CODI	172 - 98
	CRL	
	♦DIC	
	GIC	
	IDC	
	MSC	
	SDI	
	SSI	
	USS	
	WSI	
1N1984	CODI	176-191
	CRL	
	♦DIC	
	GIC	
	IDC	
	MSC	
	SCA	
	SDI	
	SSI	
	USS	
	WSI	
1N1984A	CODI	176-192
	CRL	
	♦DIC	
	GIC	
	IDC	
	MSC	
	SCA	
	SDI	
	SSI	
	USS	
	WSI	
1N1984B	CODI	176-193
	CRL	
	♦DIC	
	GIC	
	IDC	
	MSC	
	SDI	
	SSI	
	USS	
	WSI	
1N1985	△USS	181 - 80
	CODI	
	CRL	
	♦DIC	
	GIC	
	IDC	
	MSC	
	SCA	
	SDI	
	SSI	
	WSI	

TYPE No.	MFRS	Pg&Line
1N1985A	CODI	181 - 81
	CRL	
	♦DIC	
	GIC	
	IDC	
	MSC	
	SCA	
	SDI	
	SSI	
	USS	
	WSI	
1N1985B	CODI	181 - 82
	CRL	
	♦DIC	
	GIC	
	IDC	
	MSC	
	SDI	
	SSI	
	USS	
	WSI	
1N1986	△USS	187 - 70
	CODI	
	CRL	
	♦DIC	
	GIC	
	IDC	
	MSC	
	SCA	
	SDI	
	SSI	
	WSI	
1N1986A	CODI	187 - 71
	CRL	
	♦DIC	
	GIC	
	IDC	
	MSC	
	SCA	
	SDI	
	SSI	
	USS	
	WSI	
1N1986B	CODI	187 - 72
	CRL	
	♦DIC	
	GIC	
	IDC	
	MSC	
	SDI	
	SSI	
	USS	
	WSI	
1N1987	△USS	191-155
	CODI	
	CRL	
	♦DIC	
	GIC	
	IDC	
	MSC	
	SCA	
	SDI	
	SSI	
	WSI	
1N1987A	CODI	191-156
	CRL	
	♦DIC	
	GIC	
	IDC	
	MSC	
	SCA	
	SDI	
	SSI	
	USS	
	WSI	
1N1987B	CODI	191-157
	CRL	
	♦DIC	
	GIC	
	IDC	
	MSC	
	SDI	
	SSI	
	USS	
	WSI	
1N1988	△USS	196-179
	CODI	
	CRL	
	♦DIC	
	GIC	
	IDC	
	MSC	
	SCA	
	SDI	
	SSI	
	WSI	
1N1988A	CODI	196-180
	CRL	
	♦DIC	
	GIC	
	IDC	
	MSC	
	SCA	
	SDI	
	SSI	
	USS	
	WSI	
1N1988B	CODI	196-181
	CRL	
	♦DIC	
	GIC	
	IDC	
	MSC	
	SDI	
	SSI	
	USS	
	WSI	
1N1989	△USS	201 - 82
	CODI	
	CRL	
	♦DIC	
	GIC	
	IDC	
	MSC	
	SCA	
	SDI	
	SSI	
	WSI	
1N1989A	CODI	201 - 83
	CRL	
	♦DIC	
	GIC	
	IDC	
	MSC	
	SCA	
	SDI	
	SSI	
	USS	
	WSI	
1N1989B	CODI	201 - 84
	CRL	
	♦DIC	
	GIC	
	IDC	
	MSC	
	SDI	
	SSI	
	USS	
	WSI	
1N1990	△USS	206 - 31
	CODI	
	CRL	
	♦DIC	
	GIC	
	IDC	
	MSC	
	SCA	
	SDI	
	SSI	
	WSI	
1N1990A	CODI	206 - 32
	CRL	
	♦DIC	
	GIC	
	IDC	
	MSC	
	SCA	
	SDI	
	SSI	
	USS	
	WSI	
1N1990B	CODI	206 - 33
	CRL	
	♦DIC	
	GIC	
	IDC	
	MSC	
	SDI	
	SSI	
	USS	
	WSI	
1N1991	△USS	210-101
	CODI	
	CRL	
	♦DIC	
	GIC	
	IDC	
	MSC	
	SCA	
	SDI	
	SSI	
	WSI	
1N1991A	CODI	210-102
	CRL	
	DIC	
	GIC	
	IDC	
	MSC	
	SCA	
	SDI	
	SSI	
	USS	
	WSI	

△-Registered with JEDEC by this manufacturer

♦-Copy of mfr's data sheet may be ordered from D.A.T.A.

1. TYPE No. CROSS INDEX

IN TYPE NUMBER SEQUENCE

TYPE No.	MFRS	Pg&Line
1N1991B	CODI	210-103
	CRL	
	GIC	
	MSC	
	SDI	
	SSI	
	USS	
	WSI	
1N1992	△USS	214- 88
	CODI	
	CRL	
	DIC	
	GIC	
	IDC	
	MSC	
	SCA	
	SDI	
	SSI	
	WSI	
1N1992A	CODI	214- 89
	CRL	
	♦DIC	
	GIC	
	IDC	
	MSC	
	SCA	
	SDI	
	SSI	
	USS	
	WSI	
1N1992B	CODI	214- 90
	CRL	
	♦DIC	
	GIC	
	IDC	
	MSC	
	SDI	
	SSI	
	USS	
	WSI	
1N1993	△USS	217-130
	CODI	
	CRL	
	♦DIC	
	GIC	
	IDC	
	MSC	
	SCA	
	SDI	
	SSI	
	USS	
	WSI	
1N1993A	CODI	217-131
	CRL	
	♦DIC	
	GIC	
	IDC	
	MSC	
	SCA	
	SDI	
	SSI	
	USS	
	WSI	
1N1993B	CODI	217-132
	CRL	
	♦DIC	
	GIC	
	IDC	
	MSC	
	SDI	
	SSI	
	USS	
	WSI	
1N1994	△USS	220-157
	CODI	
	CRL	
	♦DIC	
	GIC	
	IDC	
	MSC	
	SCA	
	SDI	
	SSI	
	USS	
	WSI	
1N1994A	CODI	220-158
	CRL	
	♦DIC	
	GIC	
	IDC	
	MSC	
	SCA	
	SDI	
	SSI	
	USS	
	WSI	
1N1994B	CODI	220-159
	CRL	
	♦DIC	
	GIC	
	IDC	
	MSC	
	SDI	
	SSI	
	USS	
	WSI	
1N1995	△USS	224- 8
	CODI	
	CRL	
	♦DIC	
	GIC	
	IDC	
	MSC	
	SCA	
	SDI	
	SSI	
	USS	
	WSI	
1N1995A	CODI	224- 9
	CRL	
	♦DIC	
	GIC	
	IDC	
	MSC	
	SCA	
	SDI	
	SSI	
	USS	
	WSI	
1N1995B	CODI	224- 10
	CRL	
	♦DIC	
	GIC	
	IDC	
	MSC	
	SDI	
	SSI	
	USS	
	WSI	
1N1996	△USS	227- 16
	CODI	
	CRL	
	♦DIC	
	GIC	
	IDC	
	MSC	
	SCA	
	SDI	
	SSI	
	USS	
	WSI	
1N1996A	CODI	227- 17
	CRL	
	♦DIC	
	GIC	
	IDC	
	MSC	
	SCA	
	SDI	
	SSI	
	USS	
	WSI	
1N1996B	CODI	227- 18
	CRL	
	♦DIC	
	GIC	
	IDC	
	MSC	
	SDI	
	SSI	
	USS	
	WSI	
1N1997	△USS	230- 16
	CODI	
	CRL	
	♦DIC	
	GIC	
	IDC	
	MSC	
	SCA	
	SDI	
	SSI	
	USS	
	WSI	
1N1997A	CODI	230- 17
	CRL	
	♦DIC	
	GIC	
	IDC	
	MSC	
	SCA	
	SDI	
	SSI	
	USS	
	WSI	
1N1997B	CODI	230- 18
	CRL	
	♦DIC	
	GIC	
	IDC	
	MSC	
	SDI	
	SSI	
	USS	
	WSI	
1N1998,A,B	△USS	232-190
	CRL	
	♦DIC	
	GIC	
	MSC	
	SDI	
	SSI	
	WSI	
1N1999	CRL	235-172
	♦DIC	
	GIC	
	MSC	
	SSI	
	USS	
1N1999A	CRL	235-173
	♦DIC	
	GIC	
	MSC	
	SSI	
	USS	
1N1999B	CRL	235-174
	♦DIC	
	GIC	
	MSC	
	SSI	
	USS	
1N2000,A,B	CRL	239- 13
	♦DIC	
	MSC	
	SSI	
	USS	
1N2001,A,B	CRL	241-146
	♦DIC	
	MSC	
	SSI	
	USS	
1N2002,A,B	CRL	244- 27
	♦DIC	
	MSC	
	SSI	
1N2003,A,B	CRL	244-102
	♦DIC	
	MSC	
	SSI	
1N2004,A,B	CRL	244-155
	MSC	
	SSI	
1N2005,A,B	CRL	245- 5
	MSC	
	SSI	
1N2006,A,B	MSC	245- 31
	SSI	
1N2007,A,B	MSC	245- 37
	SSI	
1N2008	ASC	234- 13
	DIC	
	EDI	
	ESP	
	ETC	
	GSE	
	IDC	
	INRB	
	INRC	
	INRI	
	INRJ	
	MOTA	
	SAR	
	SCN	
	SSI	
	TIIB	
	TNC	
	USS	
1N2008A	ASC	234- 14
	DIC	
	EDI	
	ESP	
	ETC	
	GSE	
	IDC	
	INRB	
	INRC	
	INRI	
	INRJ	
	MOTA	
	SAR	
	SCN	
	SSI	
	TIIB	
	TNC	
	USS	
1N2008C,CA	♦DIC	234- 15
1N2009	ASC	235-133
	DIC	
	EDI	
	ESP	
	ETC	
	GSE	
	IDC	
	INRB	
	INRC	
	INRI	
	INRJ	
	MOTA	
	SAR	
	SCN	
	SSI	
	TIIB	
	TNC	
	USS	
1N2009A	ASC	235-134
	DIC	
	EDI	
	ESP	
	ETC	
	GSE	
	IDC	
	INRB	
	INRC	
	INRI	
	INRJ	
	MOTA	
	SAR	
	SCN	
	SSI	
	TIIB	
	TNC	
	USS	
1N2009C,CA	♦DIC	235-135
1N2010	ASC	236-166
	DIC	
	EDI	
	ESP	
	ETC	
	GSE	
	IDC	
	INRB	
	INRC	
	INRI	
	INRJ	
	MOTA	
	SAR	
	SCN	
	SSI	
	TIIB	
	TNC	
	USS	
1N2010A	ASC	236-167
	DIC	
	EDI	
	ESP	
	ETC	
	GSE	
	IDC	
	INRB	
	INRC	
	INRI	
	INRJ	
	MOTA	
	SAR	
	SCN	
	SSI	
	TIIB	
	TNC	
	USS	
1N2010C,CA	♦DIC	236-168
1N2011	ASC	238- 24
	DIC	
	EDI	
	ESP	
	ETC	
	GSE	
	IDC	
	INRB	
	INRC	
	INRI	
	INRJ	
	MOTA	
	SAR	
	SCN	
	SSI	
	TIIB	
	TNC	
	USS	
1N2011A	ASC	238- 25
	DIC	
	EDI	
	ESP	
	ETC	
	GSE	
	IDC	
	INRB	
	INRC	
	INRI	
	INRJ	
cont next col.		

TYPE No.	MFRS	Pg&Line
1N2011A		
(cont.)	MOTA	
	SAR	
	SSI	
	TIIB	
	TNC	
	USS	
1N2011C,CA	♦DIC	238- 26
1N2012	ASC	240- 10
	DIC	
	EDI	
	ESP	
	ETC	
	GSE	
	INRB	
	INRC	
	INRI	
	INRJ	
	MOTA	
	SAR	
	SCN	
	SSI	
	TIIB	
	TNC	
	USS	
1N2012A	ASC	240- 11
	DIC	
	EDI	
	ESP	
	ETC	
	GSE	
	INRB	
	INRC	
	INRI	
	INRJ	
	MOTA	
	SAR	
	SCN	
	SSI	
	TIIB	
	TNC	
	USS	
1N2012C,CA	♦DIC	240- 12
1N2013	EDL	292-107
	IDC	
	ITT	
	SCN	
	SES	
	SSI	
	TNC	
1N2014	IDC	299- 21
	ITT	
	SCN	
	SES	
	SSI	
	TNC	
1N2015	△TEC	307- 56
	IDC	
	ITT	
	SCN	
	SES	
	SSI	
	TNC	
1N2016	△TEC	309- 91
	IDC	
	ITT	
	SCN	
	SES	
	SSI	
	TNC	
1N2017	△TEC	319- 15
	IDC	
	ITT	
	SCN	
	SES	
	SSI	
	TNC	
1N2018	△TEC	320- 52
	ITT	
	SCN	
	SES	
	SSI	
	TNC	
1N2019	△TEC	327- 28
	ITT	
	SCN	
	SES	
	SSI	
	TNC	
1N2020	IDC	328- 46
	ITT	
	SCN	
	SES	
	SSI	
	TNC	
1N2021	△TEC	308- 15
	EDL	
	ETC	
	IDC	
	SES	
	SOD	
	SSI	
	SYN	
	TNC	
	TUNL	
	UPI	
1N2022	△TEC	319- 43
	EDL	
	ETC	
	IDC	
	SES	
	SOD	
	SSI	
	SYN	
	TNC	
	TUNL	
	UPI	
1N2023	△TEC	324- 39
	EDL	
	ETC	
	IDC	
	SES	
	SOD	
	SSI	
	SYN	
	TNC	
	TUNL	
	UPI	
1N2024	△TEC	327- 55
	EDL	
	ETC	
	IDC	
	SES	
	SOD	
	SSI	
	SYN	
	TNC	
	TUNL	
	UPI	
1N2025	△TEC	334- 43
	EDL	
	ETC	
	IDC	
	SES	
	SOD	
	SSI	
	SYN	
	TNC	
	TUNL	
	UPI	
1N2026	△TEC	294- 50
	BRA	
	EDL	
	ETC	
	GIC	
	IDC	
	ITT	
	SCN	
	SES	
	SOD	
	SSI	
	TNC	
	UPI	
1N2027	△TEC	312- 43
	BRA	
	EDL	
	ETC	
	GIC	
	IDC	
	ITT	
	SCN	
	SES	
	SOD	
	SSI	
	TNC	
	UPI	
1N2028	△TEC	322- 12
	BRA	
	EDL	
	ETC	
	GIC	
	IDC	
	ITT	
	SCN	
	SES	
	SOD	
	SSI	
	TNC	
	UPI	
1N2029	△TEC	331- 24
	BRA	
	EDL	
	ETC	
	GIC	
	IDC	
	ITT	
	SCN	
	SES	
cont.next col.		

TYPE No.	MFRS	Pg&Line
1N2029		
(cont)	SOD	
	SSI	
	TNC	
	UPI	
1N2030	△TEC	340- 92
	BRA	
	EDL	
	ETC	
	GIC	
	IDC	
	ITT	
	SCN	
	SES	
	SOD	
	SSI	
	TNC	
1N2031	△TEC	348- 45
	BRA	
	EDL	
	ETC	
	GIC	
	IDC	
	ITT	
	SCN	
	SES	
	SOD	
	SSI	
	TNC	
1N2032	△TEC	171- 57
	CODI	
	♦DIC	
	GSE	
	IDC	
	ITT	
	MOTA	
	MSC	
	SSI	
	TNC	
	TRW	
1N2032-2	CODI	171- 79
	GSE	
	IDC	
	SSI	
	TEC	
1N2032A	MOTA	170- 28
1N2033	△TEC	173-172
	CODI	
	♦DIC	
	GSE	
	IDC	
	ITT	
	MOTA	
	MSC	
	SAR	
	SSI	
	TNC	
	TRW	
1N2033-2	CODI	174- 7
	GSE	
	IDC	
	SSI	
	TEC	
1N2033A	IDC	172- 78
	MOTA	
1N2034	△TEC	176-170
	CODI	
	♦DIC	
	GSE	
	IDC	
	ITT	
	MOTA	
	MSC	
	SAR	
	SCN	
	SSI	
	TNC	
	TRW	
	UNI	
1N2034-2	APD	178-177
	CODI	
	GSE	
	IDC	
	SSI	
	TEC	
1N2034-3	APD	180- 3
	GSE	
	IDC	
	SSI	
	TEC	
1N2034A	MOTA	176-143
1N2035	△TEC	184- 70
	CODI	
	♦DIC	
	GSE	
	IDC	
	ITT	
	MOTA	
	MSC	
	SAR	
	SCN	
	SSI	
	TNC	
	TRW	
	UNI	
1N2035-2	APD	183-205
	CODI	
	GSE	
	IDC	
	SSI	
	TEC	
1N2035-3	APD	184-183
	GSE	
	IDC	
	SSI	
	TEC	
1N2035-4	APD	187- 44
	GSE	
	IDC	
	SSI	
	TEC	
1N2035A	MOTA	181- 63
1N2036	△TEC	189-114
	CODI	
	♦DIC	
	GSE	
	IDC	
	ITT	
	MOTA	
	MSC	
	SAR	
	SCN	
	SSI	
	TNC	
	TRW	
	UNI	
1N2036-2	APD	190- 54
	CODI	
	GSE	
	IDC	
	SEN	
	SSI	
	TEC	
1N2036A	IDC	188- 54
	MOTA	
1N2037	△TEC	194- 53
	CODI	
	♦DIC	
	GSE	
	IDC	
	ITT	
	MOTA	
	MSC	
	SAR	
	SCN	
	SSI	
	TNC	
	TRW	
	UNI	
1N2037-2	APD	194-181
	CODI	
	GSE	
	IDC	
	SSI	
	TEC	
1N2037-3	APD	196- 72
	GSE	
	IDC	
	SEN	
	SSI	
	TEC	
1N2037A	IDC	192-122
	MOTA	
1N2038	△TEC	199- 7
	CODI	
	♦DIC	
	GSE	
	IDC	
	ITT	
	MOTA	
	MSC	
	SAR	
	SCN	
	SSI	
cont.next col.		

TYPE No.	MFRS	Pg&Line
1N2038		
(cont)	TNC	
	TRW	
	UNI	
1N2038-2	APD	199-132
	CODI	
	GSE	
	IDC	
	SSI	
	TEC	
1N2038-3	APD	201- 25
	GSE	
	IDC	
	SSI	
	TEC	
1N2038A	IDC	197-140
	MOTA	
1N2039	△TEC	203-162
	CODI	
	♦DIC	
	GSE	
	IDC	
	ITT	
	MOTA	
	MSC	
	SAR	
	SCN	
	SSI	
	TNC	
	TRW	
	UNI	
1N2039-2	APD	203-163
	CODI	
	GSE	
	IDC	
	SSI	
	TEC	
1N2039-3	APD	205- 1
	GSE	
	IDC	
	SSI	
	TEC	
1N2039A	IDC	202- 47
	MOTA	
1N2040	△TEC	208- 35
	CODI	
	♦DIC	
	GSE	
	IDC	
	ITT	
	MOTA	
	MSC	
	SAR	
	SCN	
	SSI	
	TNC	
	TRW	
	UNI	
1N2040-2	APD	208-150
	CODI	
	GSE	
	IDC	
	SSI	
	TEC	
1N2040-3	APD	210- 86
	GSE	
	SSI	
	TEC	
1N2040-4	GSE	212-116
	SSI	
	TEC	
1N2040A	IDC	206-160
	MOTA	
1N2041	△TEC	171- 58
	♦DIC	
	GSE	
	IDC	
	INRB	
	INRC	
	INRI	
	INRJ	
	ITT	
	MOTA	
	SSI	
	TNC	
1N2041-1	IDC	170- 32
	TEC	
1N2041-2	IDC	171- 83
	TEC	
1N2041A	♦DIC	170- 23
	GSE	
	MOTA	
	SSI	
	TEC	
1N2041B	DIC	171- 61
	GSE	
	SSI	
	TEC	
1N2041C	DIC	171- 59
	GSE	
	SSI	
1N2042	△TEC	173-175
	♦DIC	
	GSE	
	IDC	
	INRB	
	INRC	
	INRI	
	INRJ	
	MOTA	
	SAR	
	SSI	
	TNC	
1N2042-1	IDC	172- 83
	TEC	
1N2042-2	IDC	174- 20
	TEC	
1N2042A	△TEC	172- 84
	♦DIC	
	GSE	
	MOTA	
	SSI	
1N2042B	△TEC	173-185
	DIC	
	GSE	
	IDC	
	SSI	
1N2042C	DIC	173-176
	GSE	
	SSI	
1N2043	△TEC	176-171
	ASC	
	♦DIC	
	GSE	
	IDC	
	INRB	
	INRC	
	INRI	
	INRJ	
	ITT	
	MOTA	
	SAR	
	SCN	
	SSI	
	TNC	
	TRW	
1N2043-1	IDC	176-149
	SSI	
	TEC	
1N2043-2	IDC	178-187
	SSI	
	TEC	
1N2043-3	IDC	180-161
	SSI	
	TEC	
1N2043A	△TEC	176-112
	♦DIC	
	GSE	
	ITT	
	MOTA	
	SSI	
	TRW	
1N2043B	△TEC	178-162
	DIC	
	GSE	
	ITT	
	SSI	
	TRW	
1N2043C	△TEC	179- 25
	DIC	
	GSE	
	IDC	
	ITT	
	SSI	
	TRW	

△-Registered with JEDEC by this manufacturer

♦-Copy of mfr's data sheet may be ordered from D.A.T.A.

1. TYPE No. CROSS INDEX

IN TYPE NUMBER SEQUENCE

TYPE No.	MFRS	Pg&Line
1N2044	△TEC	184- 71
ASC	♦DIC	
EDI	GSE	
IDC	INRB	
INRC	INRI	
INRJ	ITT	
MOTA	SAR	
SCN	SOD	
SSI	TNC	
	TRW	
1N2044-1	IDC	181- 71
	TEC	
1N2044-2	IDC	184- 3
	TEC	
1N2044-3	IDC	184-195
	TEC	
1N2044-4	IDC	187- 49
	TEC	
1N2044A	△TEC	181- 47
♦DIC	EDI	
GSE	ITT	
MOTA	SSI	
	TRW	
1N2044B	△TEC	183-164
DIC	GSE	
ITT	SSI	
	TRW	
1N2044C	△TEC	184- 88
DIC	GSE	
ITT	SSI	
	TRW	
1N2044D	△TEC	187- 36
GSE	ITT	
1N2045	△TEC	189-117
ASC	♦DIC	
EDI	GSE	
IDC	INRB	
INRC	INRI	
INRJ	ITT	
MOTA	SAR	
SCN	SOD	
SSI	TNC	
	TRW	
1N2045-1	IDC	189- 47
	TEC	
1N2045-2	IDC	191- 24
	TEC	
1N2045A	△TEC	189- 48
♦DIC	EDI	
GSE	IDC	
ITT	MOTA	
SSI	TRW	
1N2045B	△TEC	189-122
DIC	GSE	
IDC	ITT	
SSI	TRW	
1N2045C	DIC	189-118
GSE	IDC	
SSI	TRW	
1N2046	△TEC	194- 56
ASC	♦DIC	
EDI	GSE	
INRB	INRC	
INRI	INRJ	
ITT	MOTA	
SAR	SCN	
SOD	SSI	
TNC	TRW	
1N2046-1	IDC	193-138
	TEC	
1N2046-2	IDC	195-160
	TEC	
1N2046-3	IDC	196-143
	TEC	
1N2046A	△TEC	191-148
♦DIC	EDI	
GSE	IDC	
ITT	MOTA	
SSI	TRW	
1N2046B	△TEC	194- 58
DIC	GSE	
ITT	SSI	
	TRW	
1N2046C	△TEC	196- 14
DIC	GSE	
IDC	ITT	
SSI	TRW	
1N2047	△TEC	199- 10
ASC	♦DIC	
EDI	GSE	
IDC	INRB	
INRC	INRI	
INRJ	ITT	
MOTA	SAR	
SCN	SOD	
SSI	TNC	
	TRW	
1N2047-1	IDC	198-142
	TEC	
1N2047-2	IDC	200- 99
	TEC	
1N2047-3	IDC	201- 65
	TEC	
1N2047A	△TEC	196-171
♦DIC	EDI	
GSE	IDC	
ITT	MOTA	
SSI	TRW	
1N2047B	△TEC	199- 12
DIC	GSE	
IDC	ITT	
SSI	TRW	
1N2047C	△TEC	200-163
cont.next col		

TYPE No.	MFRS	Pg&Line
1N2047C		
(cont)	DIC	
GSE	ITT	
SSI	TRW	
1N2048	△TEC	204- 24
ASC	♦DIC	
EDI	GSE	
IDC	INRB	
INRC	INRI	
INRJ	ITT	
MOTA	SAR	
SCN	SOD	
SSI	TNC	
	TRW	
1N2048-1	IDC	203- 34
	TEC	
1N2048-2	IDC	204- 25
	TEC	
1N2048-3	IDC	205-166
	TEC	
1N2048A	△TEC	201- 78
♦DIC	EDI	
GSE	IDC	
ITT	MOTA	
SSI	TRW	
1N2048B	△TEC	203- 98
DIC	GSE	
ITT	SSI	
	TRW	
1N2048C	△TEC	204- 70
DIC	GSE	
ITT	SSI	
	TRW	
1N2049	△TEC	208- 38
ASC	♦DIC	
EDI	GSE	
IDC	INRB	
INRC	INRI	
INRJ	ITT	
MOTA	SAR	
SCN	SOD	
SSI	TNC	
	TRW	
1N2049-1	IDC	207-157
SSI	TEC	
1N2049-2	IDC	209-127
SSI	TEC	
1N2049-3	IDC	210- 93
SSI	TEC	
1N2049-4	IDC	212-127
SSI	TEC	
1N2049A	△TEC	206- 27
♦DIC	EDI	
GSE	IDC	
ITT	MOTA	
SSI	TRW	
1N2049B	△TEC	208- 40
DIC	GSE	
ITT	SSI	
	TRW	
1N2049C	△TEC	210- 83
DIC	GSE	
IDC	ITT	
SSI	TRW	
1N2054	EDL	298- 5
ETC	INRB	
INRC	INRI	
INRJ	SAR	
SES	SSI	
SYN	TNC	
	TUNL	
1N2056	△INRC	309- 3
EDL	ETC	
INRB	INRI	
INRJ	SAR	
SES	SSI	
SYN	TNC	
	TUNL	
1N2057	△INRC	318- 15
EDL	ETC	
INRB	INRI	
INRJ	SAR	
SES	SSI	
SYN	TNC	
	TUNL	
1N2058	△INRC	319- 98
EDL	ETC	
INRB	INRI	
INRJ	SAR	
SES	SSI	
SYN	TNC	
	TUNL	
1N2059	△INRC	326- 49
EDL	ETC	
INRB	INRI	
INRJ	SAR	
SES	SSI	
SYN	TNC	
	TUNL	
1N2060	△INRC	327-102
EDL	ETC	
INRB	INRI	
INRJ	SAR	
SES	SSI	
SYN	TNC	
	TUNL	

TYPE No.	MFRS	Pg&Line
1N2061	△INRC	337- 55
EDL	ETC	
INRB	INRI	
INRJ	SAR	
SES	SSI	
SYN	TNC	
	TUNL	
1N2062	△INRC	338- 64
EDL	INRB	
INRI	INRJ	
SAR	SES	
SSI	SYN	
TNC	TUNL	
1N2063	△INRC	344- 85
INRB	INRI	
INRJ	SAR	
SES	SSI	
SYN	TNC	
	TUNL	
1N2064	△INRC	354- 6
INRB	INRI	
INRJ	SES	
SSI	TNC	
	TUNL	
1N2065	△INRC	358- 14
INRB	INRI	
INRJ	SES	
SSI	TNC	
1N2066	△INRC	366- 10
INRB	INRI	
INRJ	SES	
SSI	TNC	
1N2067	△INRC	368- 54
INRB	INRI	
INRJ	SES	
SSI	TNC	
1N2068	△INRC	375- 53
INRB	INRI	
INRJ	SES	
SSI	TNC	
1N2069	♦△TII	310- 77
BNT	CNS	
CODI	DII	
EDI	EDL	
ERI	ETC	
GIC	GICC	
INRB	INRC	
INRI	INRJ	
ITT	MSC	
PWC	QUA	
♦SAR	SCN	
SCO	♦SES	
SET	SOD	
SST	TEC	
TEK	TIIB	
TIID	TIIF	
TNC	UPI	
1N2069A	BNT	310- 78
CODI	EDL	
ERI	ETC	
GIC	GICC	
INRB	INRC	
INRI	INRJ	
ITT	MSC	
PWC	QUA	
SAR	SCN	
SCO	SDI	
SET	SOD	
TEC	TEK	
♦TII	UPI	
1N2070	♦△TII	329- 47
BNT	CNS	
CODI	DII	
EDI	EDL	
ERI	ETC	
GIC	GICC	
INRB	INRC	
INRI	INRJ	
ITT	MSC	
PWC	QUA	
SAR	SCN	
SCO	SDI	
SET	SOD	
TEC	TEK	
♦TII	UPI	
1N2070A	BNT	329- 48
CODI	EDL	
ERI	ETC	
GIC	GICC	
INRB	INRC	
INRI	INRJ	
ITT	MSC	
PWC	QUA	
SAR	SCN	
SCO	SDI	
SET	SOD	
TEC	TEK	
♦TII	UPI	
1N2071	♦△TII	346- 83
BNT	CODI	
DII	EDI	
EDL	ERI	
ETC	GIC	
GICC	IDC	
INRB	INRC	
INRI	INRJ	
ITT	MSC	
PWC	QUA	
♦SAR	SCN	
SCO	♦SES	
SET	SOD	
cont.next col		

TYPE No.	MFRS	Pg&Line
1N2071		
(cont.)	SST	
TEC	TEK	
TIIB	TIID	
TIIF	TNC	
1N2071A	BNT	346- 84
CODI	EDL	
ERI	ETC	
GIC	GICC	
INRB	INRC	
INRI	INRJ	
ITT	MSC	
PWC	QUA	
SAR	SCN	
SCO	SDI	
SET	SOD	
TEC	TEK	
	♦TII	
1N2072	ERI	293- 53
ETC	IDC	
ITT	SCN	
SSI	TEC	
1N2073	ERI	299-107
ETC	ITT	
SCN	SSI	
	TEC	
1N2074	ERI	307- 74
ETC	ITT	
SCN	SSI	
	TEC	
1N2075	ERI	310- 79
ETC	ITT	
SCN	SSI	
TEC	UPI	
1N2076	ERI	319- 23
ETC	ITT	
SCN	SSI	
TEC	UPI	
1N2077	ERI	321- 6
ETC	ITT	
SCN	SSI	
TEC	UPI	
1N2078	ERI	329- 49
ETC	ITT	
SCN	SSI	
TEC	UPI	
1N2079	ERI	339- 91
ETC	ITT	
SCN	SSI	
	TEC	
1N2080	BRA	293- 21
ETC	GIC	
IDC	ITT	
SCN	SSI	
	TEC	
1N2081	BRA	299- 51
ETC	GIC	
IDC	ITT	
SCN	SSI	
	TEC	
1N2082	BRA	310- 13
ETC	GIC	
ITT	SCN	
SSI	TEC	
	UPI	
1N2083	BRA	320- 75
ETC	GIC	
ITT	SCN	
SSI	TEC	
	UPI	
1N2084	BRA	328- 81
ETC	GIC	
ITT	SCN	
SSI	TEC	
1N2085	BRA	339- 37
ETC	GIC	
IDC	ITT	
SCN	SSI	
	TEC	
1N2086	BRA	346- 24
ETC	GIC	
IDC	ITT	
SCN	SSI	
	TEC	
1N2090	IDC	293- 74
	SCN	
1N2091	SCN	300- 25
1N2092	SCN	311- 1
1N2093	SCN	321- 32
1N2094	SCN	329- 85
1N2095	IDC	340- 5
	SCN	
1N2096	SCN	347- 7
1N2102	△MIC	517- 36
♦ALP	♦ESMF	
	MISI	
1N2103	ETC	293- 54
IDC	INRB	
INRC	INRI	
INRJ	ITT	
SAR	SCN	
SES	TEC	
1N2104	ETC	299-108
INRB	INRC	
INRI	INRJ	
ITT	SAR	
SCN	SES	
SYN	TEC	
1N2105	ETC	310- 80
INRB	INRC	
INRI	INRJ	
ITT	SAR	
SCN	SES	
cont.next col		

TYPE No.	MFRS	Pg&Line
1N2105		
(cont.)	SYN	
TEC	UPI	
1N2106	ETC	321- 7
INRB	INRC	
INRI	INRJ	
ITT	SAR	
SCN	SES	
SYN	TEC	
	UPI	
1N2107	ETC	329- 50
INRB	INRC	
INRI	INRJ	
ITT	SAR	
SCN	SES	
SYN	TEC	
	UPI	
1N2108	ETC	339- 92
INRB	INRC	
INRI	INRJ	
ITT	SAR	
SCN	SES	
SYN	TEC	
1N2109	IDC	295- 9
1N2115	ETC	328- 6
IDC	ITT	
SCN	TEC	
1N2116	SCN	329- 86
	SSI	
1N2117	BRA	358- 74
ETC	INRB	
INRC	INRI	
INRJ	ITT	
SCN	SSI	
	TEC	
1N2127	ITT	517- 78
	MIC	
1N2127A	ITT	517- 79
1N2128	△INRC	297- 64
EDL	♦ETC	
IDC	INRB	
INRI	INRJ	
ITT	SSI	
SYN	TEC	
	TUNL	
1N2128A	△INRC	297- 65
EDL	ETC	
IDC	INRB	
INRI	INRJ	
ITT	SSI	
	TEC	
1N2129	△INRC	305- 80
EDL	♦ETC	
INRB	INRI	
INRJ	ITT	
SSI	SYN	
TEC	TUNL	
1N2129A	△INRC	305- 81
ETC	INRB	
INRI	INRJ	
ITT	SSI	
	TEC	
1N2130	△INRC	308- 65
EDL	♦ETC	
IDC	INRB	
INRI	INRJ	
ITT	SSI	
SYN	TEC	
	TUNL	
1N2130A	△INRC	308- 66
ETC	IDC	
INRB	INRI	
INRJ	ITT	
SSI	TEC	
1N2131	△INRC	317- 20
EDL	♦ETC	
INRB	INRI	
INRJ	ITT	
SSI	SYN	
TEC	TUNL	
1N2131A	△INRC	317- 21
ETC	INRB	
INRI	INRJ	
ITT	SSI	
	TEC	
1N2132	△INRC	319- 68
EDL	♦ETC	
INRB	INRI	
INRJ	ITT	
SSI	SYN	
TEC	TUNL	
1N2132A	△INRC	319- 69
ETC	INRB	
INRI	INRJ	
ITT	SSI	
	TEC	
1N2133	△INRC	325- 63
EDL	♦ETC	
INRB	INRI	
INRJ	ITT	
SSI	SYN	
TEC	TUNL	
1N2133A	△INRC	325- 64
ETC	INRB	
INRI	INRJ	
ITT	SSI	
	TEC	
1N2134	△INRC	327- 79
EDL	♦ETC	
INRB	INRI	
INRJ	ITT	
SSI	SYN	
TEC	TUNL	

△-Registered with JEDEC by this manufacturer

♦-Copy of mfr's data sheet may be ordered from D.A.T.A.

1. TYPE No. CROSS INDEX

IN TYPE NUMBER SEQUENCE

TYPE No.	MFRS	Pg&Line
1N2134A	△INRC	327- 80
ETC	INRB	
INRI	INRJ	
ITT	SSI	
	TEC	
1N2135	△INRC	336- 40
EDL	♦ETC	
INRB	INRI	
INRJ	ITT	
SSI	SYN	
TEC	TUNL	
1N2135A	△INRC	336- 41
ETC	INRB	
INRI	INRJ	
ITT	SSI	
TEC	WESY	
JAN1N2135A,RA	GESY	343- 47
	WESY	
1N2136	△INRC	338- 59
EDL	♦ETC	
INRB	INRI	
INRJ	ITT	
SSI	SYN	
	TUNL	
1N2136A	△INRC	338- 60
ETC	INRB	
INRI	INRJ	
ITT	SSI	
1N2137	△INRC	343-101
EDL	♦ETC	
INRB	INRI	
INRJ	ITT	
SSI	SYN	
	TUNL	
1N2137A	△INRC	343-102
ETC	INRB	
INRI	INRJ	
ITT	SSI	
1N2138	△INRC	353- 12
EDL	INRB	
INRI	INRJ	
ITT	SSI	
SYN	TUNL	
1N2138A	△INRC	353- 13
INRB	INRI	
INRJ	ITT	
	SSI	
1N2139	△INRC	409-108
INRB	INRI	
INRJ	ITT	
SCN	SCO	
	SSI	
JAN1N2146	none	280- 35
1N2147	△BRA	296- 11
EDL	ITT	
SCN	SSI	
1N2147A	△BRA	296- 12
EDL	ITT	
SCN	SSI	
1N2148	△BRA	303- 77
ITT	SCN	
SSI	TEC	
	UPI	
1N2148A	△BRA	303- 78
ITT	SCN	
	SSI	
1N2149	△BRA	314- 97
ITT	SCN	
SSI	TEC	
1N2149A	△BRA	314- 98
ITT	SCN	
	SSI	
1N2150	△BRA	323-110
ITT	SCN	
SSI	TEC	
1N2150A	△BRA	324- 1
ITT	SCN	
	SSI	
1N2151	△BRA	333- 90
ITT	SCN	
SSI	TEC	
1N2151A	△BRA	333- 91
ITT	SCN	
	SSI	
1N2152	△BRA	342- 55
ITT	SCN	
SSI	TEC	
1N2152A	△BRA	342- 56
ITT	SCN	
	SSI	
1N2153	△BRA	350-106
ITT	SCN	
SSI	TEC	
JAN1N2153	BRA	350- 48
1N2153A	△BRA	350-107
ITT	SCN	
	SSI	
1N2154	△GESY	297- 27
AMD	BRA	
EDL	ETC	
IDC	INRB	
INRC	INRI	
INRJ	ITT	
SAR	SCN	
SES	SOD	
SSI	SYN	
TEC	TNC	
TRW	TUNL	
UPI	WESY	
1N2155	△GESY	305- 22
AMD	BRA	
EDL	ETC	
INRB	INRC	
cont next col		

TYPE No.	MFRS	Pg&Line
1N2155		
(cont)	INRI	
INRJ	ITT	
SAR	SCN	
SES	SOD	
SSI	SYN	
TEC	TNC	
TRW	TUNL	
UPI	WESY	
1N2156	△GESY	316- 64
AMD	BRA	
EDL	ETC	
IDC	INRB	
INRC	INRI	
INRJ	ITT	
SAR	SCN	
SES	SOD	
SSI	SYN	
TEC	TNC	
TRW	TUNL	
UPI	WESY	
1N2157	△GESY	325- 11
AMD	BRA	
EDL	ETC	
IDC	INRB	
INRC	INRI	
INRJ	ITT	
SAR	SCN	
SES	SOD	
SSI	SYN	
TEC	TNC	
TRW	TUNL	
UPI	WESY	
1N2158	△GESY	335- 67
AMD	BRA	
EDL	ETC	
IDC	INRB	
INRC	INRI	
INRJ	ITT	
SAR	SCN	
SES	SOD	
SSI	SYN	
TEC	TNC	
TRW	TUNL	
UPI	WESY	
1N2159	△GESY	343- 61
AMD	BRA	
EDL	ETC	
IDC	INRB	
INRC	INRI	
INRJ	ITT	
SAR	SCN	
SES	SOD	
SSI	SYN	
TEC	TNC	
TRW	TUNL	
UPI	WESY	
1N2160	△GESY	352- 55
AMD	BRA	
EDL	IDC	
INRB	INRC	
INRI	INRJ	
ITT	SAR	
SCN	SES	
SOD	SSI	
SYN	TEC	
TNC	TUNL	
	WESY	
1N2163,A	△USS	187- 26
CODI	♦DIC	
GSE	♦MOTA	
♦MSC	SDI	
SSI	TNC	
1N2164,A	△USS	187- 27
CODI	♦DIC	
GSE	♦MOTA	
♦MSC	SDI	
SSI	TNC	
1N2165,A	△USS	187- 28
CODI	♦DIC	
GSE	♦MOTA	
♦MSC	SDI	
SSI	TNC	
1N2166,A	△USS	187- 29
CODI	♦DIC	
GSE	♦MOTA	
♦MSC	SDI	
SSI	TNC	
1N2167,A	△USS	187- 30
CODI	♦DIC	
GSE	♦MOTA	
♦MSC	SDI	
SSI	TNC	
1N2168,A	△USS	187- 31
CODI	♦DIC	
GSE	♦MOTA	
♦MSC	SDI	
SSI	TNC	
1N2169,A	△USS	187- 32
CODI	♦DIC	
GSE	♦MOTA	
♦MSC	SDI	
SSI	TNC	
1N2170,A	△USS	187- 33
CODI	♦DIC	
GSE	♦MOTA	
♦MSC	SDI	
SSI	TNC	
1N2171,A	△USS	187- 34
CODI	♦DIC	
GSE	♦MOTA	
♦MSC	SDI	
SSI	TNC	
1N2172	EDL	297- 61
	SSI	

TYPE No.	MFRS	Pg&Line
1N2173	EDL	305- 72
	SSI	
1N2174	SSI	317- 10
1N2175	♦△TII	575- 24
	TIIB	
1N2214	△INRC	172- 81
♦DIC	IDC	
INRB	INRI	
INRJ	SSI	
1N2216	BRA	294- 73
EDL	ETC	
IDC	ITT	
SCN	SOD	
SSI	TEC	
	UPI	
1N2217	BRA	294- 74
IDC	ITT	
SCN	SOD	
SSI	TEC	
1N2218	BRA	341- 3
ETC	IDC	
ITT	SCN	
SOD	SSI	
	TEC	
1N2219	BRA	341- 4
ITT	SCN	
SOD	SSI	
	TEC	
1N2220	BRA	348- 78
ETC	IDC	
ITT	SCN	
SOD	SSI	
	TEC	
1N2221	BRA	348- 79
ITT	SCN	
SOD	SSI	
	TEC	
1N2222	BRA	360- 45
ETC	IDC	
ITT	SCN	
SOD	SSI	
	TEC	
1N2222A	BRA	360- 46
ETC	IDC	
SCN	SSI	
	TEC	
1N2223	BRA	360- 47
IDC	ITT	
SCN	SOD	
SSI	TEC	
1N2223A	BRA	360- 48
IDC	ITT	
SCN	SSI	
	TEC	
1N2224	BRA	370- 87
ETC	IDC	
ITT	SCN	
SOD	SSI	
	TEC	
1N2224A	BRA	370- 88
ETC	ITT	
SCN	SSI	
	TEC	
1N2225	BRA	370- 89
ITT	SCN	
SOD	SSI	
	TEC	
1N2225A	BRA	370- 90
ITT	SCN	
SSI	TEC	
1N2226	IDC	378- 16
ITT	SCN	
SOD	SSI	
	TEC	
1N2226A	IDC	378- 17
ITT	SCN	
SSI	TEC	
1N2227	ITT	378- 18
SCN	SOD	
SSI	TEC	
1N2227A	ITT	378- 19
SCN	SSI	
	TEC	
1N2228	BRA	295- 95
EDL	ETC	
IDC	ITT	
SCN	SOD	
SSI	SYN	
TEC	UPI	
1N2228A	BRA	295- 96
EDL	ETC	
IDC	ITT	
SCN	SOD	
SSI	TEC	
1N2229	BRA	295- 97
IDC	ITT	
SCN	SOD	
SSI	TEC	
1N2229A	BRA	295- 98
IDC	ITT	
SCN	SOD	
SSI	TEC	
1N2230	BRA	314- 52
EDL	ETC	
IDC	ITT	
SCN	SOD	
SSI	SYN	
TEC	TUNL	
	UPI	
1N2230A	BRA	314- 53
ETC	IDC	
ITT	SCN	
SOD	SSI	
TEC	UPI	

TYPE No.	MFRS	Pg&Line
1N2231	BRA	314- 54
ITT	SCN	
SOD	SSI	
	TEC	
1N2231A	BRA	314- 55
ITT	SCN	
SOD	SSI	
	TEC	
1N2232	BRA	323- 77
EDL	ETC	
IDC	ITT	
SCN	SOD	
SSI	SYN	
TEC	TUNL	
	UPI	
1N2232A	BRA	323- 78
ETC	IDC	
ITT	SCN	
SOD	SSI	
TEC	UPI	
1N2233	BRA	323- 79
ITT	SCN	
SOD	SSI	
	TEC	
1N2233A	BRA	323- 80
ITT	SCN	
SOD	SSI	
	TEC	
1N2234	BRA	333- 44
EDL	ETC	
IDC	ITT	
SCN	SOD	
SSI	SYN	
TEC	TUNL	
	UPI	
1N2234A	BRA	333- 45
ETC	IDC	
ITT	SCN	
SOD	SSI	
TEC	UPI	
1N2235	BRA	333- 46
ITT	SCN	
SOD	SSI	
	TEC	
1N2235A	BRA	333- 47
ITT	SCN	
SOD	SSI	
	TEC	
1N2236	BRA	342- 29
EDL	ETC	
IDC	ITT	
SCN	SOD	
SSI	SYN	
TEC	TUNL	
1N2236A	BRA	342- 30
ETC	IDC	
ITT	SCN	
SOD	SSI	
	TEC	
1N2237	BRA	342- 31
ITT	SCN	
SOD	SSI	
	TEC	
1N2237A	BRA	342- 32
ITT	SCN	
SOD	SSI	
	TEC	
1N2238	BRA	350- 65
EDL	ETC	
IDC	ITT	
SCN	SOD	
SSI	SYN	
TEC	TUNL	
1N2238A	BRA	350- 66
ETC	IDC	
ITT	SCN	
SOD	SSI	
1N2239	BRA	350- 67
ITT	SCN	
SOD	SSI	
	TEC	
1N2239A	BRA	350- 68
ITT	SCN	
SOD	SSI	
	TEC	
1N2240	BRA	363- 4
EDI	EDL	
ETC	IDC	
ITT	SCN	
SOD	SSI	
SYN	TEC	
	TUNL	
1N2240A	BRA	363- 5
EDI	ETC	
IDC	ITT	
SCN	SOD	
SSI	TEC	
1N2241	BRA	363- 6
ITT	SCN	
SOD	SSI	
	TEC	
1N2241A	BRA	363- 7
ITT	SCN	
SOD	SSI	
	TEC	
1N2242	BRA	372- 70
EDI	ETC	
IDC	ITT	
SCN	SOD	
SSI	TEC	
1N2242A	BRA	372- 71
EDI	ETC	
IDC	ITT	
cont next col		

TYPE No.	MFRS	Pg&Line
1N2242A		
(cont)	SCN	
SOD	SSI	
	TEC	
1N2243	BRA	372- 72
ITT	SCN	
SSI	TEC	
1N2243A	BRA	372- 73
ITT	SCN	
SSI	TEC	
1N2244	EDI	379- 14
IDC	ITT	
SCN	SSI	
1N2244A	EDI	379- 15
IDC	ITT	
SCN	SSI	
1N2245	ITT	379- 16
SCN	SSI	
1N2245A	ITT	379- 17
SCN	SSI	
1N2246	BRA	296- 33
EDL	ERI	
ETC	IDC	
ITT	SSI	
SYN	TUNL	
	UPI	
1N2246A	BRA	296- 34
EDL	ERI	
ETC	IDC	
ITT	SCN	
SSI	TUNL	
	UPI	
1N2247	BRA	296- 35
ITT	SSI	
	TEC	
1N2247A	BRA	296- 36
ITT	SSI	
1N2248	BRA	303-104
EDL	ERI	
ETC	IDC	
ITT	SSI	
SYN	TEC	
TUNL	UPI	
1N2248A	BRA	303-105
ERI	ETC	
IDC	ITT	
SCN	SSI	
TEC	TUNL	
	UPI	
1N2249	BRA	303-106
ITT	SSI	
	TEC	
1N2249A	BRA	303-107
ITT	SSI	
	TEC	
1N2250	BRA	315- 15
EDL	ERI	
ETC	IDC	
ITT	SSI	
SYN	TEC	
TUNL	UPI	
1N2250A	BRA	315- 16
ERI	ETC	
IDC	ITT	
SCN	SSI	
TEC	TUNL	
	UPI	
1N2251	BRA	315- 17
ITT	SSI	
	TEC	
1N2251A	BRA	315- 18
ITT	SSI	
	TEC	
1N2252	BRA	324- 22
EDL	ERI	
ETC	IDC	
ITT	SSI	
SYN	TEC	
TUNL	UPI	
1N2252A	BRA	324- 23
ERI	ETC	
IDC	ITT	
SCN	SSI	
TEC	TUNL	
	UPI	
1N2253	BRA	324- 24
ITT	SSI	
	TEC	
1N2253A	BRA	324- 25
ITT	SSI	
	TEC	
1N2254	BRA	334- 15
EDL	ERI	
ETC	IDC	
ITT	SSI	
SYN	TEC	
TUNL	UPI	
1N2254A	BRA	334- 16
ERI	ETC	
IDC	ITT	
SCN	SSI	
TEC	TUNL	
	UPI	
1N2255	BRA	334- 17
ITT	SSI	
	TEC	
1N2255A	BRA	334- 18
ITT	SSI	
	TEC	
1N2256	BRA	342- 76
EDL	ERI	
ETC	IDC	
ITT	SSI	
cont next page		

△-Registered with JEDEC by this manufacturer

♦-Copy of mfr's data sheet may be ordered from D.A.T.A.

1. TYPE No. CROSS INDEX

IN TYPE NUMBER SEQUENCE

TYPE No	MFRS	Pg&Line
1N2256		
(cont)	SYN	
	TEC	
	TUNL	
1N2256A	BRA	342 - 77
	ERI	
	ETC	
	IDC	
	ITT	
	SCN	
	SSI	
	TEC	
	TUNL	
1N2257	BRA	342 - 78
	ITT	
	SSI	
	TEC	
1N2257A	BRA	342 - 79
	ITT	
	SSI	
	TEC	
1N2258	BRA	351 - 28
	EDL	
	ERI	
	ETC	
	IDC	
	ITT	
	SSI	
	SYN	
	TEC	
	TUNL	
1N2258A	BRA	351 - 29
	ERI	
	ETC	
	IDC	
	ITT	
	SCN	
	SSI	
	TEC	
	TUNL	
1N2259	BRA	351 - 30
	ITT	
	SSI	
	TEC	
1N2259A	BRA	351 - 31
	ITT	
	SSI	
	TEC	
1N2260	BRA	363 - 72
	EDI	
	EDL	
	ERI	
	ETC	
	IDC	
	ITT	
	SSI	
	SYN	
	TEC	
	TUNL	
1N2260A	BRA	363 - 73
	EDI	
	ERI	
	ETC	
	IDC	
	ITT	
	SCN	
	SSI	
	TEC	
1N2261	BRA	363 - 74
	ITT	
	SSI	
	TEC	
1N2261A	BRA	363 - 75
	ITT	
	SSI	
	TEC	
1N2262	BRA	373 - 58
	EDI	
	ERI	
	ETC	
	IDC	
	ITT	
	SSI	
	SYN	
	TEC	
	TUNL	
1N2262A	BRA	373 - 59
	EDI	
	ERI	
	ETC	
	IDC	
	ITT	
	SCN	
	SSI	
	TEC	
1N2263	BRA	373 - 60
	ITT	
	SSI	
	TEC	
1N2263A	BRA	373 - 61
	ITT	
	SSI	
	TEC	
1N2264	EDI	379 - 33
	ERI	
	IDC	
	ITT	
	SSI	
1N2264A	EDI	379 - 34
	ERI	
	IDC	
	ITT	
	SSI	
1N2265	ITT	379 - 35
	SSI	
1N2265A	ITT	379 - 36
	SSI	
1N2266	BRA	293-103
	EDI	
	EDL	
	ETC	
	IDC	
	ITT	
	SCN	
	SOD	
	SSI	
	TEC	
	UPI	
1N2267	BRA	293-104
	IDC	
	ITT	
	SCN	
	SSI	
	TEC	
1N2268	BRA	340 - 45
	EDI	
	ETC	
	IDC	
	ITT	
	SCN	
	SOD	
	SSI	
	TEC	
1N2269	BRA	340 - 46
	IDC	
	ITT	
	SCN	
	SSI	
	TEC	
1N2270	BRA	347 - 64
	EDI	
	ETC	
	IDC	
	ITT	
	SCN	
	SOD	
	SSI	
	TEC	
	♦TIIB	
1N2271	BRA	347 - 65
	ITT	
	SCN	
	SSI	
	TEC	
1N2272	ETC	296-101
	IDC	
	ITT	
	SOD	
	SSI	
	TEC	
	TUNL	
	UPI	
1N2273	ETC	304 - 86
	IDC	
	ITT	
	SOD	
	SSI	
	TEC	
	TUNL	
	UPI	

TYPE No	MFRS	Pg&Line
1N2274	ETC	316 - 11
	IDC	
	ITT	
	SOD	
	SSI	
	TEC	
	TUNL	
1N2275	ETC	324 - 96
	IDC	
	ITT	
	SOD	
	SSI	
	TEC	
	TUNL	
	UPI	
1N2276	ETC	343 - 38
	IDC	
	ITT	
	SOD	
	SSI	
	TEC	
	TUNL	
1N2277	ETC	352 - 14
	IDC	
	ITT	
	SOD	
	SSI	
	TEC	
	TUNL	
1N2278	ETC	357 - 37
	IDC	
	ITT	
	SOD	
	SSI	
	TEC	
	TUNL	
1N2279	ETC	364 - 45
	IDC	
	ITT	
	SOD	
	SSI	
	TEC	
1N2280	ETC	374 - 16
	IDC	
	ITT	
	SOD	
	SSI	
1N2281	IDC	379 - 63
	ITT	
	SOD	
	SSI	
1N2282	EDL	325 - 24
	IDC	
	ITT	
	SOD	
	SSI	
	SYN	
	TUNL	
	UPI	
1N2283	EDL	335 - 84
	ETC	
	IDC	
	ITT	
	SOD	
	SSI	
	SYN	
	TUNL	
	UPI	
1N2284	EDL	343 - 71
	IDC	
	ITT	
	SOD	
	SSI	
	SYN	
	TUNL	
1N2285	EDL	352 - 72
	IDC	
	ITT	
	SOD	
	SSI	
	SYN	
	TUNL	
1N2286	EDL	364 - 82
	IDC	
	ITT	
	SOD	
	SSI	
	SYN	
1N2287	EDL	374 - 49
	IDC	
	ITT	
	SOD	
	SSI	
	SYN	
1N2288	IDC	379 - 78
	ITT	
	SOD	
	SSI	
	SYN	
1N2289	BRA	301 - 69
	SCN	
	SSI	
1N2289A	BRA	301 - 70
	EDI	
	ETC	
	IDC	
	ITT	
	SCN	
	SSI	
	UPI	
1N2290	BRA	303 - 42
	ITT	
	SCN	
	SSI	
1N2290A	BRA	301 - 71
	EDI	
	ETC	
	IDC	
	ITT	
	SCN	
	SSI	
	UPI	
1N2291	BRA	312 - 68
	ITT	
	SCN	
	SSI	
1N2291A	BRA	322 - 32
	EDI	
	ETC	
	IDC	
	ITT	
	SCN	
	SSI	
	UPI	
1N2292	BRA	322 - 33
	ITT	
	SCN	
	SSI	
1N2292A	BRA	322 - 34
	EDI	
	ETC	
	ITT	
	SCN	
	SSI	
	UPI	
1N2293	BRA	331 - 53
	ITT	
	SCN	
	SSI	
1N2293A	BRA	331 - 54
	EDI	
	ETC	
	IDC	
	ITT	
	SCN	
	SSI	
	UPI	
1N2326	♦△RCA	598 - 14
1N2327	SSI	376 - 28
1N2328	SSI	391 - 15
1N2348	INRB	295 - 66
	INRC	
	INRI	
	INRJ	
1N2349	INRB	302-103
	INRC	
	INRI	
	INRJ	
1N2350	INRB	307-105
	INRC	
	INRI	
	INRJ	
1N2357	EDI	382 - 8
	ITT	
	SCN	
	SSI	

TYPE No	MFRS	Pg&Line
1N2358	EDI	384 - 49
	ITT	
	SCN	
	SSI	
1N2359	EDI	385 - 96
	ITT	
	SCN	
	SSI	
1N2360	EDI	388 - 9
	ITT	
	SCN	
	SSI	
1N2361	EDI	389-101
	ITT	
	SCN	
	SSI	
JAN1N2361	EDI	389-102
1N2362	EDI	382 - 14
	EDL	
	ITT	
	SCN	
	SSI	
1N2362A	EDL	382 - 45
	ITT	
	SSI	
1N2362B	EDL	382 - 54
	ITT	
	SSI	
1N2363	ITT	382 - 15
	SCN	
	SSI	
1N2363A	ITT	382 - 46
	SSI	
1N2363B	ITT	382 - 55
	SSI	
1N2364	EDI	384 - 81
	EDL	
	ITT	
	SCN	
	SSI	
1N2364A	EDL	384-107
	ITT	
	SCN	
	SSI	
1N2364B	EDL	385 - 6
	ITT	
	SCN	
	SSI	
1N2365	ITT	384 - 82
	SCN	
	SSI	
1N2365A	ITT	384-108
	SCN	
	SSI	
1N2365B	ITT	385 - 7
	SCN	
	SSI	
1N2366	EDI	386 - 21
	EDL	
	ITT	
	SCN	
	SSI	
1N2366A	EDL	386 - 56
	ITT	
	SCN	
	SSI	
1N2366B	EDL	386 - 66
	ITT	
	SCN	
	SSI	
1N2367	ITT	386 - 22
	SCN	
	SSI	
1N2367A	ITT	386 - 57
	SCN	
	SSI	
1N2367B	ITT	386 - 67
	SCN	
	SSI	
1N2368	EDI	388 - 20
	EDL	
	ITT	
	SCN	
	SSI	
1N2368A	EDL	388 - 46
	ITT	
	SCN	
	SSI	
1N2368B	EDL	388 - 55
	ITT	
	SCN	
	SSI	
1N2369	ITT	388 - 21
	SCN	
	SSI	
1N2369A	ITT	388 - 47
	SCN	
	SSI	
1N2369B	ITT	388 - 56
	SCN	
	SSI	
1N2370	EDI	390 - 20
	EDL	
	ITT	
	SCN	
	SSI	
1N2370A	EDL	390 - 51
	ITT	
	SCN	
	SSI	
1N2370B	EDL	390 - 59
	ITT	
	SCN	
	SSI	
1N2371	ITT	390 - 21
	SCN	
	SSI	
1N2371A	ITT	390 - 52
	SCN	
	SSI	
1N2371B	ITT	390 - 60
	SCN	
	SSI	
1N2372	EDI	369 - 70
	EDL	
	ETC	
	IDC	
	ITT	
	SCN	
	SSI	
1N2373	△INRC	345 - 83
	EDI	
	ETC	
	GIC	
	GICC	
	INRB	
	INRI	
	INRJ	
	ITT	
	SAR	
	SCN	
	SOD	
	SSI	
	TEC	
1N2374	△INRC	369 - 42
	CODI	♦DIC
	EDI	
	ETC	
	GIC	
	GICC	
	INRB	
	INRI	
	INRJ	
	ITT	
	SAR	
	SCN	
	SCO	
	SOD	
	SSI	
	TEC	
1N2375	△INRC	384 - 13
	CODI	♦DIC
	EDI	
	GIC	
	GICC	
	INRB	
	INRJ	
	SAR	
cont next col		

TYPE No.	MFRS	Pg&Line
1N2375		
(cont)	SCN	
	SCO	
	SOD	
	SSI	
1N2376	△INRC	389 - 60
	CODI	♦DIC
	EDI	
	GIC	
	GICC	
	INRB	
	INRI	
	INRJ	
	ITT	
	SAR	
	SCN	
	SCO	
	SOD	
	SSI	
1N2377	△INRC	391 - 66
	CODI	♦DIC
	EDI	
	GIC	
	GICC	
	INRB	
	INRI	
	INRJ	
	ITT	
	SAR	
	SCN	
	SCO	
	SOD	
	SSI	
1N2378	△INRC	393 - 93
	CODI	♦DIC
	EDI	
	GIC	
	GICC	
	INRB	
	INRI	
	INRJ	
	ITT	
	SAR	
	SCN	
	SCO	
	SOD	
	SSI	
1N2379	△INRC	396 - 74
	CODI	♦DIC
	EDI	
	GIC	
	GICC	
	INRB	
	INRI	
	INRJ	
	ITT	
	SAR	
	SCN	
	SCO	
	SOD	
	SOIF	
	SSI	
1N2380	△INRC	400 - 94
	CODI	♦DIC
	EDI	
	GIC	
	GICC	
	INRB	
	INRI	
	INRJ	
	ITT	
	SAR	
	SCN	
	SCO	
	SOD	
	SOIF	
	SSI	
1N2381	△INRC	405 - 49
	CODI	♦DIC
	EDI	
	GIC	
	GICC	
	INRB	
	INRI	
	INRJ	
	ITT	
	SAR	
	SCN	
	SCO	
	SOD	
	SOIF	
	SSI	
1N2382	△TRW	396 - 90
	CODI	♦DIC
	EDI	
	EMLS	
	♦GESY	
	GIC	
	GICC	
	INRB	
	INRC	
	INRI	
	INRJ	
	ITT	
	MOTA	
	RAYN	
	SAR	
	SCN	
	SCO	
	SES	
	SET	
	SOD	
	SOIF	
	SSI	
	TEC	
1N2382A	△TRW	397 - 19
	CODI	
	ITT	
	SCN	
	SOD	
	SSI	
1N2383	△TRW	400 - 98
	CODI	♦DIC
	EDI	
	EMLS	
	♦GESY	
	GIC	
	GICC	
	INRB	
	INRC	
	INRI	
	INRJ	
	ITT	
	MOTA	
	RAYN	
	SAR	
	SCN	
	SCO	
	SES	
	SET	
	SOD	
	SOIF	
	SSI	
	TEC	
1N2383A	△TRW	401 - 37
	CODI	
	ITT	
	SCN	
	SOD	
	SSI	
1N2384	△TRW	403 - 56
	CODI	♦DIC
	EDI	
	EMLS	
	♦GESY	
	GIC	
	GICC	
	INRB	
	INRC	
	INRI	
	INRJ	
	ITT	
	MOTA	
	RAYN	
	SAR	
	SCN	
	SCO	
	SES	
	SET	
	SOD	
	SOIF	
	SSI	
	TEC	
1N2384A	△TRW	403 - 86
	CODI	
	ITT	
	SCN	
	SOD	
	SSI	
1N2385	△TRW	405 - 64
	CODI	♦DIC
	EDI	
	EMLS	
	♦GESY	
	GIC	
	GICC	
	INRB	
	INRC	
	INRI	
	INRJ	
	ITT	
cont next col		

TYPE No.	MFRS	Pg&Line
1N2385		
(cont)	MOTA	
	RAYN	
	SAR	
	SCN	
	SCO	
	SES	
	SET	
	SOD	
	SOIF	
	SSI	
	TEC	
1N2385A	△TRW	405 - 92
	CODI	
	ITT	
	SCN	
	SOD	
	SSI	
1N2387	△USS	213 - 61
	ITT	
	SSI	
1N2389	△SAR	386 - 10
	CODI	
	EDI	
	GIC	
	GICC	
	INRB	
	INRC	
	INRI	
	INRJ	
	♦SCN	
	SOD	
	SOIF	
	SSI	
1N2390	IDC	294 - 99
	ITT	
	SSI	
	UPI	
1N2391	ITT	301-110
	SSI	
	UPI	
1N2392	ITT	313 - 1
	SSI	
	UPI	
1N2393	ITT	322 - 64
	SSI	
	UPI	
1N2394	ITT	331 - 97
	SSI	
	UPI	
1N2395	ITT	341 - 32
	SSI	
1N2396	ITT	349 - 11
	SSI	
1N2397	ITT	356 - 12
	SSI	
1N2398	ITT	361 - 84
	SSI	
1N2399	IDC	294-100
	ITT	
	SSI	
1N2400	ITT	302 - 1
	SSI	
1N2401	ITT	313 - 2
	SSI	
1N2402	ITT	322 - 65
	SSI	
1N2403	ITT	331 - 98
	SSI	
1N2404	ITT	341 - 33
	SSI	
1N2405	ITT	349 - 12
	SSI	
1N2406	ITT	356 - 13
	SSI	
1N2407	ITT	361 - 85
	SSI	
1N2408	IDC	294-101
	ITT	
	SSI	
1N2409	ITT	302 - 2
	SSI	
1N2410	ITT	313 - 3
	SSI	
1N2411	ITT	322 - 66
	SSI	
1N2412	ITT	331 - 99
	SSI	
1N2413	ITT	341 - 34
	SSI	
1N2414	ITT	349 - 13
	SSI	
1N2415	ITT	356 - 14
	SSI	
1N2416	ITT	361 - 86
	SSI	
1N2417	IDC	294-102
	ITT	
	SSI	
1N2418	ITT	302 - 3
	SSI	
1N2419	ITT	313 - 4
	SSI	
1N2420	ITT	322 - 67
	SSI	
1N2421	ITT	331-100
	SSI	
1N2422	ITT	341 - 35
	SSI	
1N2423	ITT	349 - 14
	SSI	
1N2424	ITT	356 - 15
	SSI	
1N2425	ITT	361 - 87
	SSI	
1N2426	EDL	297 - 79
	SSI	
	SYN	
1N2427	EDL	305-107
	SSI	
	SYN	
1N2428	EDL	308 - 77
	SSI	
	SYN	
1N2429	EDL	317 - 52
	SSI	
	SYN	
1N2430	EDL	319 - 77
	SSI	
	SYN	
1N2431	EDL	325 - 91
	SSI	
	SYN	
1N2432	EDL	327 - 86
	SSI	
	SYN	
1N2433	EDL	336 - 77
	SSI	
	SYN	
1N2434	EDL	344 - 16
	SSI	
	SYN	
1N2435	EDL	353 - 41
	SSI	
	SYN	

△-Registered with JEDEC by this manufacturer

♦-Copy of mfr's data sheet may be ordered from D.A.T.A.

1. TYPE No. CROSS INDEX

IN TYPE NUMBER SEQUENCE

TYPE No.	MFRS	Pg&Line
1N2436	EDL	297- 89
	SSI	
	SYN	
	TUNL	
1N2437	EDL	306- 17
	SSI	
	SYN	
	TUNL	
1N2438	EDL	308- 89
	SSI	
	SYN	
	TUNL	
1N2439	EDL	317- 76
	SSI	
	SYN	
	TUNL	
1N2440	EDL	319- 85
	SSI	
	SYN	
	TUNL	
1N2441	EDL	326- 3
	SSI	
	SYN	
	TUNL	
1N2442	EDL	327- 92
	SSI	
	SYN	
	TUNL	
1N2443	EDL	336-105
	SSI	
	SYN	
	TUNL	
1N2444	EDL	344- 40
	SSI	
	SYN	
	TUNL	
1N2445	EDL	353- 66
	SSI	
	SYN	
	TUNL	
1N2446	EDL	297- 56
	ETC	
	IDC	
	SOD	
	SSI	
	TEC	
	TRW	
	TUNL	
1N2447	ETC	305- 63
	IDC	
	SOD	
	SSI	
	TEC	
	TRW	
	TUNL	
1N2448	ETC	308- 58
	IDC	
	SOD	
	SSI	
	TEC	
	TRW	
	TUNL	
1N2449	ETC	317- 1
	IDC	
	SOD	
	SSI	
	TEC	
	TRW	
	TUNL	
1N2450	ETC	319- 63
	IDC	
	SOD	
	SSI	
	TEC	
	TRW	
	TUNL	
1N2451	ETC	325- 47
	IDC	
	SOD	
	SSI	
	TEC	
	TRW	
	TUNL	
1N2452	ETC	327- 74
	IDC	
	SOD	
	SSI	
	TEC	
	TRW	
	TUNL	
1N2453	ETC	336- 20
	IDC	
	SOD	
	SSI	
	TEC	
	TRW	
	TUNL	
1N2454	ETC	343- 91
	IDC	
	SOD	
	SSI	
	TEC	
	TRW	
	TUNL	
1N2455	IDC	352-106
	SOD	
	SSI	
	TEC	
	TRW	
	TUNL	
1N2456	IDC	357- 62
	SOD	
	SSI	
	TEC	
	TRW	
	TUNL	
1N2457	IDC	365- 10
	SOD	
	SSI	
	TEC	
	TRW	
	TUNL	
1N2458	EDL	297- 63
	ETC	
	IDC	
	SOD	
	SSI	
	SYN	
	TRW	
	TUNL	
1N2459	EDL	305- 77
	ETC	
	SOD	
	SSI	
	SYN	
	TRW	
	TUNL	
1N2460	EDL	308- 64
	ETC	
	IDC	
	SOD	
	SSI	
	SYN	
	TRW	
	TUNL	
1N2461	EDL	317- 17
	ETC	
	SOD	
	SSI	
	SYN	
	TRW	
	TUNL	
1N2462	EDL	319- 67
	ETC	
	SOD	
	SSI	
	SYN	
	TRW	
	TUNL	
1N2463	EDL	325- 62
	ETC	
	SOD	
	SSI	
	SYN	
	TRW	
	TUNL	
1N2464	EDL	327- 78
	ETC	
	SOD	
	SSI	
	SYN	
	TRW	
	TUNL	
1N2465	EDL	336- 37
	ETC	
	SOD	
	SSI	
	SYN	
	TRW	
	TUNL	
1N2466	EDL	343-100
cont next col		

TYPE No.	MFRS	Pg&Line
1N2466		
(cont)	ETC	
	SOD	
	SSI	
	SYN	
	TUNL	
1N2467	EDL	353- 9
	ITT	
	SOD	
	SSI	
	SYN	
	TUNL	
1N2468	ITT	357- 71
	SOD	
	SSI	
	TUNL	
1N2469	ITT	365- 25
	SOD	
	SSI	
	TUNL	
1N2482	Δ SAR	311- 21
	BNT	
	CODI	
	EDI	
	ETC	
	ITT	
	QUA	
	SCN	
	SCO	
	SET	
	SOD	
	SSI	
	TEC	
	TEK	
	UPI	
1N2483	Δ SAR	329-106
	BNT	
	CODI	
	EDI	
	ETC	
	ITT	
	QUA	
	SCN	
	SCO	
	SES	
	SET	
	SOD	
	SSI	
	TEC	
	TEK	
	UPI	
1N2484	Δ SAR	347- 27
	BNT	
	CODI	
	EDI	
	ETC	
	ITT	
	QUA	
	SCN	
	SCO	
	SES	
	SET	
	SOD	
	SSI	
	TEC	
	TEK	
1N2485	Δ SAR	311- 22
	ETC	
	ITT	
	QUA	
	SCN	
	SET	
	SOD	
	TEC	
	UPI	
1N2486	Δ SAR	321- 48
	ETC	
	IDC	
	ITT	
	QUA	
	SCN	
	SET	
	SOD	
	TEC	
	UPI	
1N2487	Δ SAR	329-107
	ETC	
	ITT	
	QUA	
	SCN	
	SET	
	SOD	
	TEC	
	UPI	
1N2488	Δ SAR	340- 20
	ETC	
	ITT	
	QUA	
	SCN	
	SET	
	SOD	
	TEC	
1N2489	Δ SAR	347- 28
	ETC	
	ITT	
	QUA	
	SCN	
	SET	
	SOD	
	TEC	
1N2490	Δ SAR	385-102
	CODI	
	EDI	
	GIC	
	GICC	
	INRB	
	INRC	
	INRI	
	INRJ	
	ITT	♦ SCN
	SOD	
	SSI	
1N2491	Δ TEC	296- 13
	BRA	
	EDI	
	EDL	
	ETC	
	IDC	
	INRB	
	INRC	
	INRI	
	INRJ	
	ITT	
	SES	
	SET	
	SOD	
	SSI	
	SYN	
	TNC	
	TUNL	
	UPI	
1N2492	Δ TEC	303- 79
	BRA	
	EDI	
	EDL	
	ETC	
	IDC	
	INRB	
	INRC	
	INRI	
	INRJ	
	ITT	
	SES	
	SET	
	SOD	
	SSI	
	SYN	
	TNC	
	TUNL	
	UPI	
1N2493	Δ TEC	314- 99
	BRA	
	EDI	
	EDL	
	ETC	
	IDC	
	INRB	
	INRC	
	INRI	
	INRJ	
	ITT	
	SES	
	SET	
	SOD	
	SSI	
	SYN	
	TNC	
	TUNL	
	UPI	
1N2494	Δ TEC	324- 2
	BRA	
	EDI	
	EDL	
	ETC	
	IDC	
	INRB	
	INRC	
	INRI	
	INRJ	
	ITT	
	SES	
	SET	
	SOD	
	SSI	
	SYN	
	TNC	
	TUNL	
	UPI	
1N2495	Δ TEC	333- 92
cont.next col.		

TYPE No.	MFRS	Pg&Line
1N2495		
(cont)	BRA	
	EDI	
	EDL	
	ETC	
	IDC	
	INRB	
	INRC	
	INRI	
	INRJ	
	ITT	
	SES	
	SET	
	SOD	
	SSI	
	SYN	
	TNC	
	TUNL	
	UPI	
1N2496	Δ TEC	342- 57
	BRA	
	EDI	
	EDL	
	ETC	
	IDC	
	INRB	
	INRC	
	INRI	
	INRJ	
	ITT	
	SES	
	SET	
	SOD	
	SSI	
	SYN	
	TNC	
	TUNL	
1N2497	Δ TEC	350-108
	BRA	
	EDI	
	EDL	
	ETC	
	IDC	
	INRB	
	INRC	
	INRI	
	INRJ	
	ITT	
	SES	
	SET	
	SOD	
	SSI	
	SYN	
	TNC	
	TUNL	
1N2498	ASC	189- 49
	DIC	
	EDI	
	ESP	
	ETC	
	GSE	
	IDC	
	INRB	
	INRC	
	INRI	
	INRJ	
	ITT	
	MOTA	
	SAR	
	SCN	
	SOD	
	SSI	
	TNC	
	TRW	
	USS	
1N2498A	ASC	189- 50
	DIC	
	EDI	
	ESP	
	ETC	
	GSE	
	IDC	
	INRB	
	INRC	
	INRI	
	INRJ	
	ITT	
	MOTA	
	SAR	
	SCN	
	SOD	
	SSI	
	TNC	
	TRW	
	USS	
1N2498C,CA	♦ DIC	189- 51
	ITT	
1N2499	ASC	191- 25
	DIC	
	EDI	
	ESP	
	ETC	
	GSE	
	IDC	
	INRB	
	INRC	
	INRI	
	INRJ	
	ITT	
	MOTA	
	SAR	
	SCN	
	SOD	
	SSI	
	TNC	
	TRW	
	USS	
1N2499A	ASC	191- 26
	DIC	
	EDI	
	ESP	
	ETC	
	GSE	
	IDC	
	INRB	
	INRC	
	INRI	
	INRJ	
	ITT	
	MOTA	
	SAR	
	SCN	
	SOD	
	SSI	
	TNC	
	TRW	
	USS	
1N2499C,CA	♦ DIC	191- 27
	ITT	
1N2500	ASC	193-139
	DIC	
	EDI	
	ESP	
	ETC	
	GSE	
	IDC	
	INRB	
	INRC	
	INRI	
	INRJ	
	ITT	
	MOTA	
	PWC	
	SAR	
	SCN	
	SOD	
	SSI	
	TNC	
	TRW	
	USS	
1N2500A	ASC	193-140
	DIC	
	EDI	
	ESP	
	ETC	
	GSE	
	IDC	
	INRB	
	INRC	
	INRI	
	INRJ	
	ITT	
	MOTA	
	PWC	
	SAR	
	SOD	
	SSI	
	TNC	
	TRW	
	USS	
1N2500C,CA	♦ DIC	193-141
	ITT	
1N2501	Δ TEC	359- 3
	BRA	
	ETC	
	IDC	
	ITT	
	SCN	
	SSI	
1N2502	Δ TEC	369- 45
	BRA	
	ETC	
	IDC	
	ITT	
	SCN	
	SSI	
1N2503	IDC	377- 56
	ITT	
	SCN	
	SSI	
1N2504	EDL	384- 15
cont next col.		

TYPE No	MFRS	Pg&Line
1N2504		
(cont.)	ITT	
	SCN	
	SSI	
1N2505	Δ TEC	359- 25
	BRA	
	ETC	
	IDC	
	ITT	
	SCN	
	SSI	
1N2506	Δ TEC	369- 82
	BRA	
	ETC	
	ITT	
	SCN	
	SSI	
	UPI	
1N2507	IDC	377- 71
	ITT	
	SCN	
	SSI	
1N2508	ITT	384- 41
	SCN	
	SSI	
1N2509	MIC	512- 22
1N2510	♦ Δ ALP	514- 93
1N2512	BRA	303- 36
	EDI	
	ETC	
	GIC	
	IDC	
	INRB	
	INRC	
	INRI	
	INRJ	
	ITT	
	SCN	
	SES	
	SOD	
	SSI	
	TNC	
	UPI	
1N2513	BRA	314- 46
	EDI	
	ETC	
	GIC	
	IDC	
	INRB	
	INRC	
	INRI	
	INRJ	
	ITT	
	SCN	
	SES	
	SOD	
	SSI	
	TNC	
	UPI	
1N2514	BRA	323- 70
	EDI	
	ETC	
	GIC	
	IDC	
	INRB	
	INRC	
	INRI	
	INRJ	
	ITT	
	SCN	
	SES	
	SOD	
	SSI	
	TNC	
1N2515	BRA	333- 38
	EDI	
	ETC	
	GIC	
	IDC	
	INRB	
	INRC	
	INRI	
	INRJ	
	ITT	
	SCN	
	SES	
	SOD	
	SSI	
	TNC	
1N2516	BRA	342- 24
	EDI	
	ETC	
	GIC	
	IDC	
	INRB	
	INRC	
	INRI	
	INRJ	
	ITT	
	SCN	
	SES	
	SOD	
	SSI	
	TNC	
1N2517	BRA	350- 58
	EDI	
	ETC	
	GIC	
	IDC	
	INRB	
	INRC	
	INRI	
	INRJ	
	ITT	
	SCN	
	SES	
	SOD	
	SSI	
	TNC	
1N2518	BRA	303- 37
	GIC	
	ITT	
	SCN	
	SOD	
	SSI	
1N2519	BRA	314- 47
	GIC	
	ITT	
	SCN	
	SSI	
1N2520	BRA	323- 71
	GIC	
	ITT	
	SCN	
	SSI	
1N2521	BRA	333- 39
	ETC	
	GIC	
	IDC	
	ITT	
	SCN	
	SSI	
	UPI	
1N2522	BRA	342- 25
	GIC	
	ITT	
	SCN	
	SSI	
1N2523	BRA	350- 59
	ETC	
	GIC	
	IDC	
	ITT	
	SCN	
	SSI	
1N2524	Δ BRA	295- 43
	IDC	
	ITT	
	SCN	
	SSI	
1N2525	Δ BRA	302- 75
	ITT	
	SCN	
	SSI	
1N2526	Δ BRA	313- 84
	ITT	
	SCN	
	SSI	
1N2527	Δ BRA	323- 14
	ITT	
	SCN	
	SSI	
1N2528	BRA	332- 71
	ITT	
	SCN	
	SSI	
1N2529	Δ BRA	341- 83
	ITT	
	SCN	
	SSI	
1N2530	Δ BRA	349- 86
	ITT	
	SCN	
	SSI	
1N2531	Δ BRA	356- 40
cont next col.		

TYPE No.	MFRS	Pg&Line
1N2531		
(cont.)	ITT	
	SCN	
	SSI	
1N2532	Δ BRA	362- 40
	ITT	
	SCN	
	SSI	
1N2533	Δ BRA	367- 30
	ITT	
	SCN	
	SSI	
1N2534	Δ BRA	372- 59
	ITT	
	SCN	
	SSI	
1N2535	Δ BRA	295- 44
	IDC	
	ITT	
	SCN	
	SSI	
1N2536	Δ BRA	302- 76
	ITT	
	SCN	
	SSI	
1N2537	Δ BRA	313- 85
	ITT	
	SCN	
	SSI	
1N2538	Δ BRA	323- 15
	ITT	
	SCN	
	SSI	
1N2539	Δ BRA	332- 72
	ITT	
	SCN	
	SSI	
1N2540	Δ BRA	341- 84
	ITT	
	SCN	
	SSI	
1N2541	Δ BRA	349- 87
	ITT	
	SCN	
	SSI	
1N2542	Δ BRA	356- 41
	ITT	
	SCN	
	SSI	
1N2543	Δ BRA	362- 41
	ITT	
	SCN	
	SSI	
1N2544	Δ BRA	367- 31
	ITT	
	SCN	
	SSI	
1N2545	Δ BRA	372- 60
	ITT	
	SCN	
	SSI	
1N2546	Δ BRA	295- 45
	IDC	
	ITT	
	SCN	
	SSI	
1N2547	Δ BRA	302- 77
	ITT	
	SCN	
	SSI	
1N2548	Δ BRA	313- 86
	ITT	
	SCN	
	SSI	
1N2549	Δ BRA	323- 16
	ITT	
	SCN	
	SSI	
1N2550	Δ BRA	332- 73
	ITT	
	SCN	
	SSI	
1N2551	Δ BRA	341- 85
	ITT	
	SCN	
	SSI	
1N2552	Δ BRA	349- 88
	ITT	
	SCN	
	SSI	
1N2553	Δ BRA	356- 42
	ITT	
	SCN	
	SSI	
1N2554	Δ BRA	362- 42
	ITT	
	SCN	
	SSI	
1N2555	Δ BRA	367- 32
	ITT	
	SCN	
	SSI	
1N2556	Δ BRA	372- 61
	ITT	
	SCN	
	SSI	
1N2557	Δ BRA	356- 84
	ITT	
	SSI	
1N2558	BRA	363- 37
	ITT	
	SSI	
1N2559	Δ BRA	367- 59
	ITT	
	SSI	
1N2560	Δ BRA	373- 31
	ITT	
	SSI	
1N2561	Δ BRA	356- 85
	ITT	
	SSI	
1N2562	Δ BRA	363- 38
	ITT	
	SSI	
1N2563	Δ BRA	367- 60
	ITT	
	SSI	
1N2564	Δ BRA	373- 32
	ITT	
	SSI	
1N2565	Δ BRA	296- 14
	ITT	
	SSI	
1N2566	Δ BRA	303- 80
	ITT	
	SSI	
1N2567	BRA	314-100
	ITT	
	SSI	
1N2568	Δ BRA	324- 3
	ITT	
	SSI	
1N2569	Δ BRA	333- 93
	ITT	
	SSI	
1N2570	Δ BRA	342- 58
	ITT	
	SSI	
1N2571	Δ BRA	350-109
	ITT	
	SSI	
1N2572	Δ BRA	356- 86
	ITT	
	SSI	
1N2573	Δ BRA	363- 39
	ITT	
	SSI	
1N2574	Δ BRA	367- 61
	ITT	
	SSI	

Δ-Registered with JEDEC by this manufacturer

♦-Copy of mfr's data sheet may be ordered from D.A.T.A.

1. TYPE No. CROSS INDEX

IN TYPE NUMBER SEQUENCE

TYPE No.	MFRS	Pg&Line
1N2575	△BRA	373- 33
	ITT	
	SSI	
1N2576	△BRA	296- 64
	ITT	
	SSI	
1N2577	△BRA	304- 40
	ITT	
	SSI	
1N2578	△BRA	315- 69
	ITT	
	SSI	
1N2579	△BRA	324- 56
	ITT	
	SSI	
1N2580	△BRA	334- 70
	ITT	
	SSI	
1N2581	△BRA	342-108
	ITT	
	SSI	
1N2582	△BRA	351- 78
	ITT	
	SSI	
1N2583	△BRA	357- 5
	ITT	
	SSI	
1N2584	△BRA	363-109
	ITT	
	SSI	
1N2585	△BRA	367- 84
	ITT	
	SSI	
1N2586	△BRA	373- 90
	ITT	
	SSI	
1N2587	△BRA	296- 65
	ITT	
	SSI	
1N2588	△BRA	304- 41
	ITT	
	SSI	
1N2589	△BRA	315- 70
	ITT	
	SSI	
1N2590	△BRA	324- 57
	ITT	
	SSI	
1N2591	△BRA	334- 71
	ITT	
	SSI	
1N2592	△BRA	342-109
	ITT	
	SSI	
1N2593	△BRA	351- 79
	ITT	
	SSI	
1N2594	△BRA	357- 6
	ITT	
	SSI	
	UPI	
1N2595	△BRA	363-110
	ITT	
	SSI	
1N2596	△BRA	367- 85
	ITT	
	SSI	
1N2597	△BRA	373- 91
	ITT	
	SSI	
1N2598	△BRA	296- 66
	ETC	
	ITT	
	SSI	
	UPI	
1N2599	△BRA	304- 42
	ITT	
	SSI	
1N2600	△BRA	315- 71
	ITT	
	SSI	
1N2601	△BRA	324- 58
	ITT	
	SSI	
1N2602	△BRA	334- 72
	ITT	
	SSI	
1N2603	△BRA	342-110
	ITT	
	SSI	
1N2604	△BRA	351- 80
	ITT	
	SSI	
1N2605	△BRA	357- 7
	ITT	
	SSI	
1N2606	△BRA	364- 1
	ITT	
	SSI	
1N2607	△BRA	367- 86
	ITT	
	SSI	
1N2608	△BRA	373- 92
	ITT	
	SSI	
1N2609	EDL	293- 75
	ERI	
	ITT	
	SCN	
	SOIF	
	TEC	
1N2610	EDL	300- 26
	ERI	
	GIC	
	INRB	
	INRC	
	INRI	
	INRJ	
	ITT	
	QUA	
	♦SAR	
	SCN	
	SEN	
	SOIF	
	SYN	
	TEC	
	UPI	
	WESY	
1N2611	EDL	311- 2
	ERI	
	GIC	
	INRB	
	INRC	
	INRI	
	INRJ	
	ITT	
	QUA	
	♦SAR	
	SCN	
	SEN	
	SOIF	
	SYN	
	TEC	
	UPI	
	WESY	
1N2612	EDL	321- 33
	ERI	
	GIC	
	INRB	
	INRC	
	INRI	
	INRJ	
	ITT	
	QUA	
	♦SAR	
	SCN	
	SEN	
	SOIF	
	SYN	
	TEC	
	UPI	
	WESY	
1N2613	EDL	329- 87
	GIC	
	INRB	
	INRC	
	INRI	
	INRJ	
	ITT	
	QUA	
	♦SAR	
	SCN	
	SEN	
	SOIF	
	SYN	
	TEC	
	UPI	
	WESY	
1N2614	EDL	340- 6
cont next col		

TYPE No.	MFRS	Pg&Line
1N2614		
(cont)	GIC	
	INRB	
	INRC	
	INRI	
	INRJ	
	ITT	
	QUA	
	♦SAR	
	SCN	
	SEN	
	SOIF	
	SYN	
	TEC	
	WESY	
1N2615	EDL	347- 8
	GIC	
	IDC	
	INRB	
	INRC	
	INRI	
	INRJ	
	ITT	
	QUA	
	♦SAR	
	SCN	
	SEN	
	SOIF	
	SYN	
	TEC	
	WESY	
1N2616	EDL	360- 5
	GIC	
	IDC	
	INRB	
	INRC	
	INRI	
	INRJ	
	ITT	
	QUA	
	♦SAR	
	SCN	
	SEN	
	SOIF	
	SYN	
	TEC	
	WESY	
1N2617	EDL	370- 50
	GIC	
	INRB	
	INRC	
	INRI	
	INRJ	
	ITT	
	QUA	
	♦SAR	
	SCN	
	SEN	
	SOIF	
	SYN	
	TEC	
	WESY	
1N2618	ITT	377-108
	QUA	
	SCN	
1N2619	ITT	384- 74
	QUA	
	SCN	
	SSI	
1N2620	△MOTA	186-187
	CODI	
	♦DIC	
	GSE	
	IDC	
	ITT	
	♦MSC	
	SDI	
	SSI	
	TNC	
	USS	
1N2620A	△MOTA	186-188
	CODI	
	♦DIC	
	GSE	
	IDC	
	ITT	
	♦MSC	
	SDI	
	SSI	
	TNC	
	USS	
1N2620B	△MOTA	186-189
	CODI	
	♦DIC	
	GSE	
	IDC	
	ITT	
	♦MSC	
	SDI	
	SSI	
	TNC	
	USS	
1N2621	△MOTA	186-190
	CODI	
	♦DIC	
	GSE	
	IDC	
	ITT	
	♦MSC	
	SDI	
	SSI	
	TNC	
	USS	
1N2621A	△MOTA	186-191
	CODI	
	♦DIC	
	GSE	
	IDC	
	ITT	
	♦MSC	
	SDI	
	SSI	
	TNC	
	USS	
1N2621B	△MOTA	186-192
	CODI	
	♦DIC	
	GSE	
	IDC	
	ITT	
	♦MSC	
	SDI	
	SSI	
	TNC	
	USS	
1N2622	△MOTA	186-193
	♦DIC	
	GSE	
	IDC	
	ITT	
	♦MSC	
	SDI	
	SSI	
	TNC	
	USS	
1N2622A	△MOTA	186-194
	♦DIC	
	GSE	
	IDC	
	ITT	
	♦MSC	
	SDI	
	SSI	
	TNC	
	USS	
1N2622B	△MOTA	186-195
	♦DIC	
	GSE	
	IDC	
	ITT	
	♦MSC	
	SDI	
	SSI	
	TNC	
	USS	
1N2623	△MOTA	186-196
	CODI	
	♦DIC	
	GSE	
	IDC	
	ITT	
	♦MSC	
	SDI	
	SSI	
	TNC	
	USS	
1N2623A	△MOTA	187- 1
	CODI	
	♦DIC	
	GSE	
	IDC	
	ITT	
	♦MSC	
	SDI	
	SSI	
	TNC	
	USS	
1N2623B	△MOTA	187- 2
	CODI	
	♦DIC	
	GSE	
	IDC	
	ITT	
	♦MSC	
	SDI	
	SSI	
	TNC	
	USS	
1N2624	△MOTA	187- 3
cont next col		

TYPE No.	MFRS	Pg&Line
1N2624		
(cont)	CODI	
	♦DIC	
	GSE	
	IDC	
	ITT	
	♦MSC	
	SDI	
	SSI	
	TNC	
	USS	
1N2624A	△MOTA	187- 4
	CODI	
	♦DIC	
	GSE	
	IDC	
	ITT	
	♦MSC	
	SDI	
	SSI	
	TNC	
	USS	
1N2624B	△MOTA	187- 5
	CODI	
	♦DIC	
	GSE	
	IDC	
	ITT	
	♦MSC	
	SDI	
	SSI	
	TNC	
	USS	
1N2630	△INRC	383-109
	CODI	
	EDI	
	GIC	
	GICC	
	INRB	
	INRI	
	INRJ	
	ITT	
	SAR	
	♦SCN	
	SOD	
	SOIF	
	SSI	
1N2631	△INRC	386- 6
	CODI	
	EDI	
	GIC	
	GICC	
	INRB	
	INRI	
	INRJ	
	ITT	
	SAR	
	♦SCN	
	SOD	
	SOIF	
	SSI	
1N2632	△INRC	393- 18
	CODI	
	EDI	
	EDL	
	GIC	
	GICC	
	INRB	
	INRI	
	INRJ	
	ITT	
	SAR	
	♦SCN	
	SOD	
	SOIF	
	SSI	
1N2633	△INRC	386- 7
	CODI	
	EDI	
	GIC	
	GICC	
	INRB	
	INRI	
	INRJ	
	ITT	
	SAR	
	♦SCN	
	SOD	
	SOIF	
	SSI	
1N2634	△INRC	386- 8
	CODI	
	EDI	
	GIC	
	GICC	
	INRB	
	INRI	
	INRJ	
	ITT	
	SAR	
	♦SCN	
	SOD	
	SSI	
1N2635	△INRC	383-110
	CODI	
	EDI	
	GIC	
	GICC	
	INRB	
	INRI	
	INRJ	
	ITT	
	SAR	
	♦SCN	
	SOD	
	SOIF	
	SSI	
1N2636	△INRC	384- 1
	CODI	
	EDI	
	GIC	
	GICC	
	INRB	
	INRI	
	INRJ	
	ITT	
	♦SCN	
	SOD	
	SSI	
1N2637	△INRC	405-107
	EDI	
	EDL	
	INRB	
	INRI	
	INRJ	
	ITT	
	SAR	
	♦SCN	
	SOD	
1N2638	△INRC	301- 72
	IDC	
	INRB	
	INRI	
	INRJ	
	ITT	
	SCN	
	SSI	
1N2641	△INRC	312- 69
	INRB	
	INRI	
	INRJ	
	ITT	
	SCN	
1N2644	△INRC	322- 35
	INRB	
	INRI	
	INRJ	
	ITT	
	SCN	
1N2647	△INRC	331- 55
	INRB	
	INRI	
	INRJ	
	ITT	
	SCN	
1N2650	△INRC	348- 80
	INRB	
	INRI	
	INRJ	
	ITT	
	SCN	
1N2653	△INRC	361- 49
	INRB	
	INRI	
	INRJ	
	ITT	
	SCN	
1N2656	△INRC	378- 64
	INRB	
	INRI	
	INRJ	
	ITT	
	SCN	
1N2659	△INRC	386- 35
	INRB	
	INRI	
	INRJ	
	ITT	
	SCN	
1N2662	△INRC	390- 35
cont next col		

TYPE No.	MFRS	Pg&Line
1N2662		
(cont.)	INRB	
	INRI	
	INRJ	
	ITT	
	SCN	
1N2664	△INRC	391- 87
	INRB	
	INRI	
	INRJ	
	ITT	
1N2666	△INRC	395- 15
	INRB	
	INRI	
	INRJ	
	ITT	
1N2667	△INRC	397- 50
	INRB	
	INRI	
	INRJ	
	ITT	
	SCN	
1N2668	△INRC	398- 69
	INRB	
	INRI	
	INRJ	
	ITT	
	SCN	
1N2669	△INRC	303- 30
	IDC	
	INRB	
	INRI	
	INRJ	
	ITT	
	SCN	
1N2673	△INRC	314- 39
	INRB	
	INRI	
	INRJ	
	ITT	
	SCN	
1N2677	△INRC	323- 66
	INRB	
	INRI	
	INRJ	
	ITT	
	SCN	
1N2681	△INRC	333- 32
	INRB	
	INRI	
	INRJ	
	ITT	
	SCN	
1N2685	△INRC	350- 51
	INRB	
	INRI	
	INRJ	
	ITT	
	SCN	
1N2687	△INRC	362-105
	INRB	
	INRI	
	INRJ	
	ITT	
	SCN	
1N2689	△INRC	367- 47
	INRB	
	INRI	
	INRJ	
	ITT	
	SCN	
1N2690	△INRC	379- 6
	INRB	
	INRI	
	INRJ	
	ITT	
	SCN	
1N2691	△INRC	386- 51
	INRB	
	INRI	
	INRJ	
	ITT	
	SCN	
1N2692	△INRC	303- 90
	INRB	
	INRI	
	INRJ	
	ITT	
	SCN	
1N2694	△INRC	314-110
	INRB	
	INRI	
	INRJ	
	ITT	
	SCN	
1N2696	△INRC	324- 13
	INRB	
	INRI	
	INRJ	
	ITT	
	SCN	
1N2698	△INRC	333-109
	INRB	
	INRI	
	INRJ	
	ITT	
	SCN	
1N2700	△INRC	351- 16
	INRB	
	INRI	
	INRJ	
	ITT	
	SCN	
1N2701	△INRC	363- 63
	INRB	
	INRI	
	INRJ	
	ITT	
	SCN	
1N2702	△INRC	302- 87
	IDC	
	INRB	
	INRI	
	INRJ	
	ITT	
	SCN	
1N2705	△INRC	313- 96
	INRB	
	INRI	
	INRJ	
	ITT	
	SCN	
1N2708	△INRC	323- 26
	INRB	
	INRI	
	INRJ	
	ITT	
	SCN	
1N2711	△INRC	332- 89
	INRB	
	INRI	
	INRJ	
	ITT	
	SCN	
1N2714	△INRC	349-104
	INRB	
	INRI	
	INRJ	
	ITT	
	SCN	
1N2717	△INRC	362- 58
	INRB	
	INRI	
	INRJ	
	ITT	
	SCN	
1N2720	△INRC	378-103
	INRB	
	INRI	
	INRJ	
	ITT	
	SCN	
1N2722	△INRC	386- 47
	INRB	
	INRI	
	INRJ	
	ITT	
	SCN	
1N2723	△INRC	390- 45
	INRB	
	INRI	
	INRJ	
	ITT	
	SCN	

TYPE No.	MFRS	Pg&Line
1N2724	△INRC	391- 91
	INRB	
	INRI	
	INRJ	
	ITT	
	SCN	
1N2725	△INRC	302- 88
	IDC	
	INRB	
	INRI	
	INRJ	
	ITT	
	SCN	
1N2728	△INRC	313- 97
	INRB	
	INRI	
	INRJ	
	ITT	
	SCN	
1N2731	△INRC	323- 27
	INRB	
	INRI	
	INRJ	
	ITT	
	SCN	
1N2734	△INRC	332- 90
	INRB	
	INRI	
	INRJ	
	ITT	
	SCN	
1N2737	△INRC	349-105
	INRB	
	INRI	
	INRJ	
	ITT	
	SCN	
1N2738	△INRC	362- 59
	INRB	
	INRI	
	INRJ	
	ITT	
	SCN	
1N2739	△INRC	378-104
	INRB	
	INRI	
	INRJ	
	ITT	
	SCN	
1N2740	△INRC	303- 31
	EDL	
	IDC	
	INRB	
	INRI	
	INRJ	
	ITT	
	SCN	
1N2742	△INRC	314- 40
	EDL	
	INRB	
	INRI	
	INRJ	
	ITT	
	SCN	
1N2744	△INRC	323- 67
	EDL	
	INRB	
	INRI	
	INRJ	
	ITT	
	SCN	
1N2746	△INRC	333- 33
	EDL	
	INRB	
	INRI	
	INRJ	
	ITT	
	SCN	
1N2748	△INRC	350- 52
	EDL	
	INRB	
	INRI	
	INRJ	
	ITT	
	SCN	
1N2749	△INRC	362-106
	EDL	
	INRB	
	INRI	
	INRJ	
	ITT	
	SCN	
1N2750	△INRC	302- 89
	IDC	
	INRB	
	INRI	
	INRJ	
	ITT	
	SCN	
1N2753	△INRC	313- 98
	INRB	
	INRI	
	INRJ	
	ITT	
	SCN	
1N2756	△INRC	323- 28
	INRB	
	INRI	
	INRJ	
	ITT	
	SCN	
1N2759	△INRC	332- 91
	INRB	
	INRI	
	INRJ	
	ITT	
	SCN	
1N2762	△INRC	349-106
	INRB	
	INRI	
	INRJ	
	ITT	
	SCN	
1N2763	△INRC	362- 60
	INRB	
	INRI	
	INRJ	
	ITT	
	SCN	
1N2764	△INRC	378-105
	INRB	
	INRI	
	INRJ	
	ITT	
	SCN	
1N2765	△TRW	176-182
	CODI	
	♦DIC	
	GSE	
	IDC	
	♦MSC	
	SSI	
	TNC	
	TSC	
	USS	
1N2765A	△TRW	176-183
	CODI	
	♦DIC	
	GSE	
	IDC	
	♦MSC	
	SSI	
	TNC	
	TSC	
	USS	
1N2766	△TRW	196- 11
	CODI	
	♦DIC	
	GSE	
	MSC	
	SSI	
	TSC	
	USS	
1N2766A	△TRW	196- 12
	CODI	
	♦DIC	
	GSE	
	SSI	
	TSC	
	USS	
1N2767	△TRW	206- 15
	CODI	
	♦DIC	
	GSE	
	IDC	
	MSC	
	SSI	
	TSC	
	USS	
1N2767A	△TRW	206- 16
	CODI	
	♦DIC	
cont next page		

△-Registered with JEDEC by this manufacturer

♦-Copy of mfr's data sheet may be ordered from D.A.T.A.

1. TYPE No. CROSS INDEX

IN TYPE NUMBER SEQUENCE

TYPE No.	MFRS	Pg&Line
1N2767A		
(cont)	GSE	
IDC	SSI	
TSC	USS	
1N2768	△TRW	212- 81
CODI	♦DIC	
GSE	IDC	
MSC	SSI	
TSC	USS	
1N2768A	△TRW	212- 82
CODI	♦DIC	
GSE	IDC	
SSI	TSC	
	USS	
1N2769	△TRW	216- 36
CODI	♦DIC	
GSE	IDC	
MSC	SSI	
TSC	USS	
1N2769A	△TRW	216- 37
CODI	♦DIC	
GSE	IDC	
SSI	TSC	
	USS	
1N2770	△TRW	219- 22
CODI	♦DIC	
GSE	IDC	
MSC	SSI	
TSC	USS	
1N2770A	△TRW	219- 23
CODI	♦DIC	
GSE	IDC	
SSI	TSC	
	USS	
1N2771	△MIC	517- 10
1N2772	IDC	355- 41
ITT	SSI	
1N2773	IDC	359- 96
ITT	SSI	
1N2774	IDC	367- 6
ITT	SSI	
1N2775	ITT	370- 35
	SSI	
1N2776	ITT	376- 31
	SSI	
1N2777	ITT	377- 97
	SSI	
1N2778	ITT	381- 30
	SSI	
1N2779	ITT	382- 9
	SSI	
1N2780	ITT	384- 69
	SSI	
1N2781	ALP	386- 11
ITT	SSI	
1N2784	△SYN	316- 31
EDL	ETC	
IDC	ITT	
SOD	SSI	
	UPI	
1N2785	△SYN	335- 38
EDL	ETC	
IDC	ITT	
SOD	SSI	
	UPI	
1N2786	IDC	315- 14
SSI	UPI	
1N2787	IDC	334- 14
SSI	UPI	
1N2788	△SYN	317- 5
EDL	IDC	
ITT	SOD	
	SSI	
1N2789	△SYN	336- 24
EDL	IDC	
ITT	SOD	
	SSI	
1N2790	MSC	183-208
	SSI	
1N2791	SSI	284- 78
	WESY	
1N2792	♦△PHIL	516- 69
JAN1N2792	none	516- 70
1N2792A	♦PHIL	516- 71
1N2792B	♦PHIL	516- 72
1N2793	BRA	296- 31
EDL	ETC	
IDC	ITT	
SOD	SSI	
SYN	TEC	
TUNL	UPI	
1N2794	BRA	303-102
EDL	ETC	
IDC	ITT	
SOD	SSI	
SYN	TEC	
TUNL	UPI	
1N2795	BRA	308- 12
EDL	ETC	
IDC	ITT	
SOD	SSI	
SYN	TEC	
TUNL	UPI	
1N2796	BRA	315- 12
EDL	ETC	
IDC	ITT	
SOD	SSI	
SYN	TEC	
TUNL	UPI	
1N2797	BRA	319- 42
EDL	ETC	
IDC	ITT	
SSI	SYN	
cont next col		

TYPE No.	MFRS	Pg&Line
1N2797		
(cont)	TEC	
TUNL	UPI	
1N2798	BRA	324- 20
EDL	ETC	
IDC	ITT	
SOD	SSI	
SYN	TEC	
TUNL	UPI	
1N2799	BRA	327- 54
EDL	ETC	
IDC	ITT	
SOD	SSI	
SYN	TEC	
TUNL	UPI	
1N2800	BRA	334- 11
EDL	ETC	
IDC	ITT	
SSI	SYN	
TEC	TUNL	
	UPI	
1N2801	IDC	266- 9
ITT	SES	
1N2802	MIC	512- 53
1N2804,A,B	♦△MOTA	178-147
ASC	♦DIC	
ETC	GSE	
SDI	SEN	
SES	TEC	
JAN1N2804B,RB	ASC	178-148
	MOTA	
1N2805,A,B	♦△MOTA	180-187
ASC	♦DIC	
ETC	GSE	
SDI	SEN	
SES	TEC	
JAN1N2805B,RB	ASC	180-188
	MOTA	
1N2806,A,B	♦△MOTA	183- 63
ASC	♦DIC	
ETC	GSE	
SDI	SEN	
SES	TEC	
JAN1N2806B,RB	ASC	183- 64
DIC	MOTA	
1N2807,A,B	♦△MOTA	186-170
ASC	♦DIC	
ETC	GSE	
SDI	SEN	
SES	TEC	
JAN1N2807B,RB	ASC	186-171
DIC	MOTA	
1N2808,A,B	♦△MOTA	189- 87
ASC	♦DIC	
ETC	GSE	
SDI	SEN	
SES	TEC	
JAN1N2808B,RB	ASC	189- 88
DIC	MOTA	
1N2809,A,B	♦△MOTA	191- 55
ASC	♦DIC	
ETC	GSE	
SDI	SEN	
SES	TEC	
JAN1N2809B,RB	ASC	191- 56
DIC	MOTA	
1N2810,A,B	♦△MOTA	193-180
ASC	♦DIC	
ETC	GSE	
SDI	SEN	
SES	TEC	
JAN1N2810B,RB	ASC	193-181
DIC	MOTA	
1N2811,A,B	♦△MOTA	195-189
ASC	♦DIC	
ETC	GSE	
SDI	SEN	
SES	TEC	
JAN1N2811B,RB	ASC	195-190
DIC	MOTA	
1N2812,A,B	♦△MOTA	196-153
ASC	♦DIC	
ETC	GSE	
SDI	SEN	
SES	TEC	
JAN1N2813B,RB	ASC	198-184
DIC	MOTA	
1N2814,A,B	♦△MOTA	200-129
ASC	♦DIC	
ETC	GSE	
SDI	SEN	
SES	TEC	
JAN1N2814B,RB	ASC	200-130
DIC	MOTA	
1N2815,A,B	♦△MOTA	201- 70
ASC	♦DIC	
ETC	GSE	
SDI	SEN	
	TEC	
1N2816,A,B	♦△MOTA	203- 74
ASC	♦DIC	
ETC	GSE	
SDI	SEN	
SES	TEC	
JAN1N2816B,RB	DIC	203- 75
	MOTA	
1N2817,A,B	♦△MOTA	204- 30
ASC	♦DIC	
cont next col		

TYPE No.	MFRS	Pg&Line
1N2817,A,B		
(cont)	ETC	
GSE	SDI	
SEN	TEC	
1N2818,A,B	♦△MOTA	205-201
ASC	♦DIC	
ETC	GSE	
SDI	SEN	
SES	TEC	
JAN1N2818B,RB	DIC	206- 1
	MOTA	
1N2819,A,B	♦△MOTA	207-196
ASC	♦DIC	
ETC	GSE	
SDI	SEN	
SES	TEC	
JAN1N2819B,RB	DIC	207-197
	MOTA	
1N2820,A,B	♦△MOTA	209-157
ASC	♦DIC	
ETC	GSE	
SDI	SEN	
SES	TEC	
JAN1N2820B,RB	DIC	209-158
	MOTA	
1N2821,A,B	♦△MOTA	210- 74
ASC	♦DIC	
ETC	GSE	
SDI	SEN	
	TEC	
1N2822,A,B	♦△MOTA	212- 64
ASC	♦DIC	
ETC	GSE	
SDI	SEN	
SES	TEC	
JAN1N2822B,RB	DIC	212- 65
	MOTA	
1N2823,A,B	♦△MOTA	214- 58
ASC	♦DIC	
ETC	GSE	
SDI	SEN	
SES	TEC	
JAN1N2823B,RB	DIC	214- 59
	MOTA	
1N2824,A,B	♦△MOTA	216- 19
ASC	♦DIC	
ETC	GSE	
SDI	SEN	
SES	TEC	
JAN1N2824B,RB	DIC	216- 20
	MOTA	
1N2825,A,B	♦△MOTA	217-104
ASC	♦DIC	
ETC	GSE	
SDI	SEN	
SES	TEC	
JAN1N2825B,RB	DIC	217-105
	MOTA	
1N2826,A,B	♦△MOTA	218-177
ASC	♦DIC	
ETC	GSE	
SDI	SEN	
SES	TEC	
JAN1N2826B,RB	DIC	218-178
	MOTA	
1N2827,A,B	♦△MOTA	220- 62
ASC	♦DIC	
ETC	GSE	
SDI	SEN	
SES	TEC	
JAN1N2827B,RB	DIC	220- 63
	MOTA	
1N2828,A,B	♦△MOTA	220-144
ASC	♦DIC	
ETC	GSE	
SDI	SEN	
	TEC	
1N2829,A,B	♦△MOTA	222- 15
ASC	♦DIC	
ETC	GSE	
SDI	SEN	
SES	TEC	
JAN1N2829B,RB	DIC	222- 16
	MOTA	
1N2830,A,B	♦△MOTA	222-114
ASC	♦DIC	
ETC	GSE	
SDI	SEN	
	TEC	
1N2831,A,B	♦△MOTA	223-132
ASC	♦DIC	
ETC	GSE	
SDI	SEN	
SES	TEC	
JAN1N2831B,RB	DIC	223-133
	MOTA	
1N2832,A,B	♦△MOTA	225- 60
ASC	♦DIC	
ETC	GSE	
SDI	SEN	
SES	TEC	
JAN1N2832B,RB	DIC	225- 61
	MOTA	
1N2833,A,B	♦△MOTA	226-165
ASC	♦DIC	
ETC	GSE	
SDI	SEN	
SES	TEC	
JAN1N2833B,RB	DIC	226-166
	MOTA	
1N2834,A,B	♦△MOTA	228- 54
ASC	♦DIC	
ETC	GSE	
cont next col		

TYPE No	MFRS	Pg&Line
1N2834,A,B		
(cont.)	SDI	
SEN	SES	
	TEC	
JAN1N2834B,RB	DIC	228- 55
	MOTA	
1N2835,A,B	♦△MOTA	229-153
ASC	♦DIC	
ETC	GSE	
SDI	SEN	
	TEC	
JAN1N2835B,RB	DIC	229-154
	MOTA	
1N2836,A,B	♦△MOTA	231- 41
ASC	♦DIC	
ETC	GSE	
SDI	SEN	
SES	TEC	
JAN1N2836B,RB	DIC	231- 42
	MOTA	
1N2837,A,B	♦△MOTA	232-148
ASC	♦DIC	
ETC	GSE	
SDI	SEN	
SES	TEC	
JAN1N2837B,RB	DIC	232-149
	MOTA	
1N2838,A,B	♦△MOTA	234- 47
ASC	♦DIC	
ETC	GSE	
SDI	SEN	
SES	TEC	
JAN1N2838B,RB	MOTA	234- 48
1N2839,A,B	♦△MOTA	234-132
ASC	♦DIC	
ETC	GSE	
SDI	SEN	
	TEC	
1N2840,A,B	♦△MOTA	235-157
ASC	♦DIC	
ETC	GSE	
SDI	SEN	
SES	TEC	
JAN1N2840B,RB	MOTA	235-158
1N2841,A,B	♦△MOTA	237- 24
ASC	♦DIC	
ETC	GSE	
SDI	SEN	
SES	TEC	
JAN1N2841B,RB	MOTA	237- 25
1N2842,A,B	♦△MOTA	238- 44
ASC	♦DIC	
ETC	GSE	
SDI	SEN	
SES	TEC	
JAN1N2842B,RB	MOTA	238- 45
1N2843,A,B	♦△MOTA	240- 41
ASC	♦DIC	
ETC	GSE	
SDI	SEN	
SES	TEC	
JAN1N2843B,RB	MOTA	240- 42
1N2844,A,B	♦△MOTA	241- 36
ASC	♦DIC	
ETC	GSE	
SDI	SEN	
SES	TEC	
JAN1N2844B,RB	MOTA	241- 37
1N2845,A,B	♦△MOTA	242-162
ASC	♦DIC	
ETC	GSE	
SDI	SEN	
SES	TEC	
JAN1N2845B,RB	MOTA	242-163
1N2846,A,B	♦△MOTA	244- 19
ASC	♦DIC	
ETC	GSE	
SDI	SEN	
SES	TEC	
JAN1N2846B,RB	MOTA	244- 20
1N2847	BRA	302- 6
ITT	SCN	
SSI	TEC	
1N2848	BRA	313- 8
ITT	SCN	
SSI	TEC	
1N2849	BRA	322- 69
ITT	SCN	
	TEC	
1N2850	BRA	331-105
ITT	SCN	
	TEC	
1N2851	BRA	341- 26
ITT	SCN	
SSI	TEC	
1N2852	BRA	349- 1
ITT	SCN	
SSI	TEC	
1N2858	△RCA	293- 86
BRA	ERI	
ETC	INRB	
INRC	INRI	
INRJ	ITT	
SAR	SCN	
SSI	TEC	
1N2858A	♦△RCA	294- 30
EDI	ETC	
IDC	INRB	
INRC	INRI	
INRJ	SCN	
SSI	UPI	
1N2859	△RCA	300- 44
BRA	ERI	
cont next col		

TYPE No.	MFRS	Pg&Line
1N2859		
(cont.)	ETC	
IDC	INRB	
INRC	INRI	
INRJ	ITT	
SAR	SCN	
SSI	TEC	
1N2859A	♦△RCA	301- 13
EDI	ETC	
IDC	INRB	
INRC	INRI	
INRJ	SCN	
SSI	UPI	
1N2860	△RCA	311- 24
BRA	ERI	
ETC	IDC	
INRB	INRC	
INRI	INRJ	
ITT	SAR	
SCN	SSI	
	TEC	
1N2860A	♦△RCA	312- 11
EDI	IDC	
INRB	INRC	
INRI	INRJ	
SCN	SSI	
	UPI	
1N2861	△RCA	321- 49
BRA	ERI	
ETC	INRB	
INRC	INRI	
INRJ	ITT	
SAR	SCN	
SSI	TEC	
1N2861A	♦△RCA	321-104
EDI	ETC	
IDC	INRB	
INRC	INRI	
INRJ	SCN	
SSI	UPI	
1N2862	△RCA	329-109
BRA	ERI	
ETC	IDC	
INRB	INRC	
INRI	INRJ	
ITT	SAR	
SCN	SSI	
	TEC	
1N2862A	♦△RCA	330-103
EDI	ETC	
IDC	INRB	
INRC	INRI	
INRJ	SCN	
SSI	UPI	
1N2863	△RCA	340- 21
BRA	ERI	
ETC	IDC	
INRB	INRC	
INRI	INRJ	
ITT	SAR	
SCN	SSI	
	TEC	
1N2863A	♦△RCA	340- 79
EDI	ETC	
IDC	INRB	
INRC	INRI	
INRJ	SCN	
	SSI	
1N2864	△RCA	347- 30
BRA	ERI	
ETC	IDC	
INRB	INRC	
INRI	INRJ	
ITT	SAR	
SCN	SSI	
	TEC	
1N2864A	♦△RCA	348- 20
EDI	ETC	
IDC	INRB	
INRC	INRI	
INRJ	SCN	
	SSI	
1N2865	ITT	354-109
	SCN	
1N2866	ITT	370- 33
	SCN	
1N2878	CODI	355- 13
GIC	GICC	
ITT	SCN	
SCO	SOD	
SSI	TIIB	
1N2879	CODI	355- 14
GIC	GICC	
IDC	ITT	
SCN	SCO	
SOD	SSI	
	TIIB	
1N2880	CODI	369- 72
GIC	GICC	
ITT	SCN	
SCO	SOD	
SSI	TIIB	
1N2881	CODI	369- 73
GIC	GICC	
ITT	SCN	
SCO	SOD	
SSI	TIIB	
1N2882	CODI	369- 74
GIC	GICC	
ITT	SCN	
SOD	SSI	
	TIIB	
1N2883	CODI	369- 75
cont next page		

△-Registered with JEDEC by this manufacturer

♦-Copy of mfr's data sheet may be ordered from D.A.T.A.

1. TYPE No. CROSS INDEX

IN TYPE NUMBER SEQUENCE

TYPE No	MFRS	Pg&Line
1N2883		
(cont)	GIC	
	GICC	
	ITT	
	SCN	
	SCO	
	SOD	
	SSI	
	TIIB	
1N2884	CODI	382- 6
	GIC	
	GICC	
	ITT	
	SCN	
	SCO	
	SOD	
	SSI	
	TIIB	
1N2885	CODI	382- 7
	GIC	
	GICC	
	ITT	
	SCN	
	SCO	
	SOD	
	SSI	
	TIIB	
1N2886	CODI	384- 28
	GIC	
	GICC	
	ITT	
	SCN	
	SCO	
	SOD	
	SSI	
	TIIB	
1N2887	CODI	384- 29
	GIC	
	GICC	
	ITT	
	SCN	
	SCO	
	SOD	
	SOIF	
	SSI	
	TIIB	
1N2888	CODI	387- 74
	GIC	
	GICC	
	ITT	
	SCN	
	SCO	
	SOD	
	TIIB	
1N2889	CODI	387- 75
	GIC	
	GICC	
	ITT	
	SCN	
	SCO	
	SOD	
	SSI	
	TIIB	
1N2890	CODI	389- 76
	GIC	
	GICC	
	ITT	
	SCN	
	SCO	
	SOD	
	SSI	
	TIIB	
1N2891	CODI	389- 77
	GIC	
	GICC	
	ITT	
	SCN	
	SCO	
	SOD	
	SOIF	
	SSI	
	TIIB	
1N2892	CODI	390-108
	GIC	
	GICC	
	ITT	
	SCN	
	SCO	
	SOD	
	SSI	
	TIIB	
1N2893	CODI	390-109
	GIC	
	GICC	
	ITT	
	SCN	
	SCO	
	SOD	
	SSI	
	TIIB	
1N2894	CODI	391- 71
	GIC	
	GICC	
	ITT	
	SCN	
	SCO	
	SOD	
	SSI	
	TIIB	
1N2895	CODI	391- 72
	GIC	
	GICC	
	ITT	
	SCN	
	SCO	
	SOD	
	SSI	
	TIIB	
1N2896	CODI	392- 37
	GIC	
	GICC	
	ITT	
	SCN	
	SCO	
	SOD	
	SSI	
	TIIB	
1N2897	CODI	392- 38
	GIC	
	GICC	
	ITT	
	SCN	
	SCO	
	SOD	
	SOIF	
	SSI	
	TIIB	
1N2898	CODI	393- 20
	GIC	
	GICC	
	ITT	
	SCN	
	SCO	
	SOD	
	SSI	
	TIIB	
1N2899	CODI	393- 21
	GIC	
	GICC	
	ITT	
	SCN	
	SCO	
	SOD	
	SSI	
	TIIB	
1N2900	CODI	394- 16
	GIC	
	GICC	
	ITT	
	SCN	
	SCO	
	SOD	
	SSI	
	TIIB	
1N2901	CODI	394- 17
	♦ESMF	GIC
	GICC	ITT
	MISI	SCN
	SCO	SOD
	SOIF	SSI
		TIIB
1N2902	CODI	395- 3
	GIC	
	GICC	
	ITT	
	SCN	
	SCO	
	SOD	
	TIIB	
1N2903	CODI	395- 4
	GIC	
	GICC	
	ITT	
	SCN	
	SCO	
	SOD	
	TIIB	
1N2904	CODI	395- 65
	GIC	
	GICC	
cont next col		

TYPE No.	MFRS	Pg&Line
1N2904		
(cont)	ITT	
	SCN	
	SCO	
	SOD	
	TIIB	
1N2905	CODI	395- 66
	GIC	
	GICC	
	ITT	
	SCN	
	SCO	
	SOD	
	SOIF	
	TIIB	
1N2906	CODI	395- 67
	GIC	
	GICC	
	ITT	
	SCN	
	SCO	
	SOD	
	TIIB	
1N2907	CODI	395- 68
	GIC	
	GICC	
	ITT	
	SCN	
	SCO	
	SOD	
	TIIB	
1N2908	CODI	396- 24
	GIC	
	GICC	
	ITT	
	SCN	
	SCO	
	SOD	
	TIIB	
1N2909	CODI	396- 25
	GIC	
	GICC	
	ITT	
	SCO	
	SOD	
	TIIB	
1N2910	CODI	396-110
	GIC	
	GICC	
	ITT	
	SCN	
	SCO	
	SOD	
	TIIB	
1N2911	CODI	397- 1
	♦ESMF	GIC
	GICC	ITT
	MISI	SCN
	SCO	SOD
	SOIF	TIIB
1N2912	CODI	397- 77
	GIC	
	GICC	
	ITT	
	SCN	
	SCO	
	SOD	
	TIIB	
1N2913	CODI	397- 78
	GIC	
	GICC	
	ITT	
	SCN	
	SCO	
	SOD	
	TIIB	
1N2914	CODI	398- 18
	GIC	
	GICC	
	ITT	
	SCN	
	SCO	
	SOD	
	SSI	
	TIIB	
1N2915	CODI	398- 19
	GIC	
	GICC	
	ITT	
	SCN	
	SCO	
	SOD	
	SOIF	
	SSI	
	TIIB	
1N2916	CODI	398- 20
	GIC	
	GICC	
	ITT	
	SCN	
	SCO	
	SOD	
	SSI	
	TIIB	
1N2917	CODI	398- 21
	GIC	
	GICC	
	ITT	
	SCN	
	SCO	
	SOD	
	SSI	
	TIIB	
1N2918	CODI	399- 61
	GIC	
	GICC	
	ITT	
	SCN	
	SCO	
	SOD	
	SSI	
	TIIB	
1N2919	CODI	399- 62
	♦ESMF	GIC
	GICC	ITT
	MISI	SCN
	SCO	SOD
	SOIF	SSI
		TIIB
1N2920	CODI	400- 45
	GIC	
	GICC	
	ITT	
	SCN	
	SCO	
	SOD	
	SSI	
	TIIB	
1N2921	CODI	400- 46
	GIC	
	GICC	
	ITT	
	SCN	
	SCO	
	SOD	
	SOIF	
	SSI	
	TIIB	
1N2922	CODI	401- 18
	GIC	
	GICC	
	ITT	
	SCN	
	SCO	
	SOD	
	SSI	
	TIIB	
1N2923	CODI	401- 19
	♦ESMF	GIC
	GICC	ITT
	MISI	SCN
	SCO	SOD
	SOIF	SSI
		TIIB
1N2924	CODI	401- 91
	GIC	
	GICC	
	ITT	
	SCN	
	SCO	
	SOD	
	SSI	
	TIIB	
1N2925	CODI	401- 92
	GIC	
	GICC	
	ITT	
	SCN	
cont next col		

TYPE No.	MFRS	Pg&Line
1N2925		
(cont)	SCO	
	SOD	
	SOIF	
	TIIB	
1N2926	♦△ALP	518- 32
1N2926A	♦△ALP	518- 33
1N2927	♦△CRL	566- 26
	SSI	
1N2927A	♦△CRL	566- 27
	SSI	
1N2928	♦△CRL	566- 94
	SSI	
1N2928A	♦△CRL	566- 95
	SSI	
1N2929	♦△CRL	567-102
	SSI	
1N2929A	♦△CRL	567-103
	SSI	
1N2930	♦△CRL	570-109
	SSI	
1N2930A	♦△CRL	570-110
	SSI	
1N2931	♦△CRL	572- 29
	SSI	
1N2931A	♦△CRL	572- 30
	SSI	
1N2932	♦△CRL	572- 95
	SSI	
1N2932A	♦△CRL	572- 85
	SSI	
1N2933	♦△CRL	572-107
	SSI	
1N2933A	♦△CRL	572-105
	SSI	
1N2934	♦△CRL	573- 67
	SSI	
1N2934A	♦△CRL	573- 68
	SSI	
1N2937	♦DIC	220-137
IDC	SOD	
	SSI	
1N2938	IDC	165- 40
SOD	SSI	
1N2970,A,B	♦△MOTA	178-119
ASC	♦DIC	
DII	EDI	
ETC	GSE	
IDC	INRB	
INRC	INRI	
INRJ	MULB	
PWC	♦SAR	
SCN	SDI	
SEN	SES	
SOD	SOIF	
SSI	TEC	
TII	TIID	
TIIF	TNC	
TRW	♦USS	
JAN1N2970B,RB	DIC	178-120
INRC	MOTA	
TRW	USS	
1N2971,A,B	♦△MOTA	180-162
ASC	♦DIC	
DII	EDI	
ETC	GSE	
IDC	INRB	
INRC	INRI	
INRJ	MULB	
PHIC	PWC	
♦SAR	SCN	
SDI	SEN	
SES	SOD	
SOIF	SSI	
TEC	TII	
TIID	TIIF	
TNC	TRW	
	♦USS	
JAN1N2971B,RB	DIC	180-163
INRC	MOTA	
TRW	USS	
1N2972,A,B	♦△MOTA	183- 33
ASC	♦DIC	
DII	EDI	
ETC	GSE	
IDC	INRB	
INRC	INRI	
INRJ	MULB	
PHIC	PWC	
♦SAR	SCN	
SDI	SEN	
SES	SOD	
SOIF	SSI	
TEC	TII	
TIID	TIIF	
TNC	TRW	
	♦USS	
JAN1N2972B,RB	DIC	183- 34
INRC	MOTA	
TRW	USS	
1N2973,A,B	♦△MOTA	186-145
ASC	♦DIC	
DII	EDI	
ESP	ETC	
GSE	IDC	
INRB	INRC	
INRI	INRJ	
MULB	PHIC	
PWC	♦SAR	
SCN	SDI	
SEN	SES	
SOD	SOIF	
SSI	TEC	
TII	TIID	
TIIF	TNC	
	♦USS	
JAN1N2973B,RB	DIC	186-146
INRC	MOTA	
TRW	USS	
1N2974,A,B	♦△MOTA	189- 52
ASC	♦DIC	
DII	EDI	
ESP	ETC	
GSE	IDC	
INRB	INRC	
INRI	INRJ	
MULB	PHIC	
PWC	♦SAR	
SCN	SDI	
SEN	SES	
SOD	SOIF	
SSI	TEC	
TII	TIID	
TIIF	TNC	
	♦USS	
JAN1N2974B,RB	DIC	189- 53
ESP	INRC	
MOTA	USS	
1N2975,A,B	♦△MOTA	191- 28
ASC	♦DIC	
DII	EDI	
ESP	ETC	
GSE	IDC	
INRB	INRC	
INRI	INRJ	
MULB	SAR	
SCN	SDI	
SEN	SOD	
SSI	TEC	
TII	TIID	
TIIF	TNC	
	♦USS	
JAN1N2975B,RB	DIC	191- 29
ESP	INRC	
MOTA	USS	
1N2976,A,B	♦△MOTA	193-142
ASC	♦DIC	
DII	EDI	
ESP	ETC	
GSE	IDC	
INRB	INRC	
INRI	INRJ	
MULB	PHIC	
PWC	♦SAR	
SCN	SDI	
SEN	SES	
SOD	SOIF	
SSI	TEC	
TII	TIID	
TIIF	TNC	
	♦USS	
JAN1N2976B,RB	DIC	193-143
ESP	INRC	
MOTA	USS	
1N2977,A,B	♦△MOTA	195-161
ASC	♦DIC	
DII	EDI	
ESP	ETC	
GSE	IDC	
INRB	INRC	
INRI	INRJ	
MULB	PHIC	
PWC	♦SAR	
SCN	SDI	
SEN	SES	
SOD	SOIF	
SSI	TEC	
TII	TIID	
TIIF	TNC	
	♦USS	
JAN1N2977B,RB	DIC	195-162
ESP	INRC	
MOTA	USS	
1N2978,A,B	♦△MOTA	196-144
♦DIC	EDI	
ESP	ETC	
GSE	IDC	
INRB	INRC	
INRI	INRJ	
MULB	SAR	
SCN	SDI	
SEN	SES	
SOD	SSI	
TEC	TII	
TIID	TIIF	
TNC	♦USS	
1N2979,A,B	♦△MOTA	198-143
ASC	♦DIC	
DII	EDI	
ESP	ETC	
GSE	IDC	
INRB	INRC	
INRI	INRJ	
MULB	PHIC	
PWC	♦SAR	
SCN	SDI	
SEN	SES	
SOD	SOIF	
SSI	TEC	
TII	TIID	
TIIF	TNC	
	♦USS	
JAN1N2979B,RB	DIC	198-144
cont.next col		

TYPE No.	MFRS	Pg&Line
JAN1N2979B,RB		
(cont)	ESP	
	INRC	MOTA
		USS
1N2980,A,B	♦△MOTA	200-100
	ASC	♦DIC
	DII	EDI
	ESP	ETC
	GSE	IDC
	INRB	INRC
	INRI	INRJ
	MULB	PHIC
	PWC	♦SAR
	SCN	SDI
	SEN	SES
	SOD	SOIF
	SSI	TEC
	TII	TIID
	TIIF	TNC
		♦USS
JAN1N2980B,RB	DIC	200-101
	ESP	INRC
	MOTA	USS
1N2981,A,B	♦△MOTA	201- 66
♦DIC		EDI
	ESP	ETC
	GSE	IDC
	INRB	INRC
	INRI	INRJ
	MULB	SAR
	SCN	SDI
	SEN	SOD
	SSI	TEC
	TII	TIID
	TIIF	TNC
		♦USS
1N2982,A,B	♦△MOTA	203- 35
	ASC	♦DIC
	DII	EDI
	ESP	ETC
	GSE	IDC
	INRB	INRC
	INRI	INRJ
	MULB	PHIC
	PWC	♦SAR
	SCN	SDI
	SEN	SES
	SOD	SOIF
	SSI	TEC
	TII	TIID
	TIIF	TNC
		♦USS
JAN1N2982B,RB	DIC	203- 36
	ESP	INRC
	MOTA	USS
1N2983,A,B	♦△MOTA	204- 26
♦DIC		EDI
	ESP	ETC
	GSE	IDC
	INRB	INRC
	INRI	INRJ
	MULB	SAR
	SCN	SDI
	SEN	SOD
	SSI	TEC
	TII	TIID
	TIIF	TNC
		♦USS
1N2984,A,B	♦△MOTA	205-167
	ASC	♦DIC
	DII	EDI
	ESP	ETC
	GSE	IDC
	INRB	INRC
	INRI	INRJ
	MULB	PHIC
	PWC	♦SAR
	SCN	SDI
	SEN	SES
	SOD	SOIF
	SSI	TEC
	TII	TIID
	TIIF	TNC
		♦USS
JAN1N2984B,RB	DIC	205-168
	ESP	INRC
	MOTA	USS
1N2985,A,B	♦△MOTA	207-158
	ASC	♦DIC
	DII	EDI
	ESP	ETC
	GSE	IDC
	INRB	INRC
	INRI	INRJ
	MULB	PHIC
	PWC	♦SAR
	SCN	SDI
	SEN	SES
	SOD	SOIF
	SSI	TEC
	TII	TIID
	TIIF	TNC
		♦USS
JAN1N2985B,RB	DIC	207-159
	ESP	INRC
	MOTA	USS
1N2986,A,B	♦△MOTA	209-128
	ASC	♦DIC
	DII	EDI
	ESP	ETC
	GSE	IDC
	INRB	INRC
	INRI	INRJ
cont next page		

△-Registered with JEDEC by this manufacturer

♦-Copy of mfr's data sheet may be ordered from D.A.T.A.

1. TYPE No. CROSS INDEX

IN TYPE NUMBER SEQUENCE

TYPE No.	MFRS	Pg&Line
1N2986,A,B		
(cont)	MULB	
PHIC	PWC	
♦SAR	SCN	
SDI	SEN	
SES	SOD	
SOIF	SSI	
TEC	TII	
TIID	TIIF	
TNC	♦USS	
JAN1N2986B,RB	DIC	209-129
ESP	INRC	
MOTA	USS	
1N2987,A,B	♦△MOTA	210- 70
♦DIC	EDI	
ESP	ETC	
GSE	IDC	
INRB	INRC	
INRI	INRJ	
MULB	SAR	
SCN	SDI	
SEN	SOD	
SOIF	SSI	
TEC	TII	
TIID	TIIF	
TNC	♦USS	
1N2988,A,B	♦△MOTA	212- 28
ASC	♦DIC	
DII	EDI	
ESP	ETC	
GSE	IDC	
INRB	INRC	
INRI	INRJ	
MULB	PHIC	
PWC	♦SAR	
SCN	SDI	
SEN	SES	
SOD	SOIF	
SSI	TEC	
TII	TIID	
TIIF	TNC	
	♦USS	
JAN1N2988B,RB	DIC	212- 29
ESP	INRC	
MOTA	USS	
1N2989,A,B	♦△MOTA	214- 27
ASC	♦DIC	
DII	EDI	
ESP	ETC	
GSE	IDC	
INRB	INRC	
INRI	INRJ	
MULB	PHIC	
PWC	♦SAR	
SCN	SDI	
SEN	SES	
SOD	SOIF	
SSI	TEC	
TII	TIID	
TIIF	TNC	
	♦USS	
JAN1N2989B,RB	DIC	214- 28
ESP	INRC	
MOTA	USS	
1N2990,A,B	♦△MOTA	215-186
ASC	♦DIC	
DII	EDI	
ESP	ETC	
GSE	IDC	
INRB	INRC	
INRI	INRJ	
MULB	PHIC	
PWC	♦SAR	
SCN	SDI	
SEN	SES	
SOD	SOIF	
SSI	TEC	
TII	TIID	
TIIF	TNC	
	♦USS	
JAN1N2990B,RB	DIC	215-187
ESP	INRC	
MOTA	USS	
1N2991,A,B	♦△MOTA	217- 76
ASC	♦DIC	
DII	EDI	
ESP	ETC	
GSE	IDC	
INRB	INRC	
INRI	INRJ	
MULB	PHIC	
PWC	♦SAR	
SCN	SDI	
SEN	SES	
SOD	SOIF	
SSI	TEC	
TII	TIID	
TIIF	TNC	
	♦USS	
JAN1N2991B,RB	DIC	217- 77
ESP	INRC	
MOTA	USS	
1N2992,A,B	♦△MOTA	218-148
ASC	♦DIC	
DII	EDI	
ESP	ETC	
GSE	IDC	
INRB	INRC	
INRI	INRJ	
MULB	PHIC	
PWC	♦SAR	
SCN	SDI	
SEN	SES	
cont.next col.		

TYPE No.	MFRS	Pg&Line
1N2992,A,B		
(cont)	SOD	
SOIF	SSI	
TEC	TII	
TIID	TIIF	
TNC	♦USS	
JAN1N2992B,RB	DIC	218-149
ESP	INRC	
MOTA	USS	
1N2993,A,B	♦△MOTA	220- 37
ASC	♦DIC	
DII	EDI	
ESP	ETC	
GSE	IDC	
INRB	INRC	
INRI	INRJ	
MULB	PHIC	
PWC	♦SAR	
SCN	SDI	
SEN	SES	
SOD	SOIF	
SSI	TEC	
TII	TIID	
TIIF	TNC	
	♦USS	
JAN1N2993B,RB	DIC	220- 38
ESP	INRC	
MOTA	USS	
1N2994,A,B	♦△MOTA	220-138
♦DIC	EDI	
ESP	ETC	
GSE	IDC	
INRB	INRC	
INRI	INRJ	
MULB	SAR	
SCN	SDI	
SEN	SOD	
SSI	TEC	
TII	TIID	
TIIF	TNC	
	♦USS	
1N2995,A,B	♦△MOTA	221-171
ASC	♦DIC	
DII	EDI	
ESP	ETC	
GSE	IDC	
INRB	INRC	
INRI	INRJ	
MULB	PHIC	
PWC	♦SAR	
SCN	SDI	
SEN	SES	
SOD	SOIF	
SSI	TEC	
TII	TIID	
TIIF	TNC	
	♦USS	
JAN1N2995B,RB	DIC	221-172
ESP	INRC	
MOTA	USS	
1N2996,A,B	♦△MOTA	222-108
♦DIC	EDI	
ESP	ETC	
GSE	IDC	
INRB	INRC	
INRI	INRJ	
MULB	SAR	
SCN	SDI	
SEN	SOD	
SSI	TEC	
TII	TIID	
TIIF	TNC	
	♦USS	
1N2997,A,B	♦△MOTA	223-108
ASC	♦DIC	
DII	EDI	
ESP	ETC	
GSE	IDC	
INRB	INRC	
INRI	INRJ	
MULB	PHIC	
PWC	♦SAR	
SCN	SDI	
SEN	SES	
SOD	SOIF	
SSI	TEC	
TII	TIID	
TIIF	TNC	
	♦USS	
JAN1N2997B,RB	DIC	223-109
ESP	INRC	
MOTA	USS	
1N2998,A,B	♦△MOTA	223-183
♦DIC	EDI	
ESP	ETC	
GSE	IDC	
INRB	INRC	
INRI	INRJ	
MULB	SAR	
SCN	SDI	
SEN	SOD	
SSI	TEC	
TII	TIID	
TIIF	TNC	
	♦USS	
1N2999,A,B	♦△MOTA	225- 28
ASC	♦DIC	
DII	EDI	
ESP	ETC	
GSE	IDC	
INRB	INRC	
INRI	INRJ	
MULB	PHIC	
cont.next col.		

TYPE No.	MFRS	Pg&Line
1N2999,A,B		
(cont)	PWC	
♦SAR	SCN	
SDI	SEN	
SES	SOD	
SOIF	SSI	
TEC	TII	
TIID	TIIF	
TNC	♦USS	
JAN1N2999B,RB	DIC	225- 29
ESP	INRC	
MOTA	USS	
1N3000,A,B	♦△MOTA	226-140
ASC	♦DIC	
DII	EDI	
ESP	ETC	
GSE	IDC	
INRB	INRC	
INRI	INRJ	
MULB	PHIC	
PWC	♦SAR	
SCN	SDI	
SEN	SES	
SOD	SOIF	
SSI	TEC	
TII	TIID	
TIIF	TNC	
	♦USS	
JAN1N3000B,RB	DIC	226-141
ESP	INRC	
MOTA	USS	
1N3001,A,B	♦△MOTA	228- 25
ASC	♦DIC	
DII	EDI	
ESP	ETC	
GSE	IDC	
INRB	INRC	
INRI	INRJ	
MULB	PHIC	
PWC	♦SAR	
SCN	SDI	
SEN	SES	
SOD	SOIF	
SSI	TEC	
TII	TIID	
TIIF	TNC	
	♦USS	
JAN1N3001B,RB	DIC	228- 26
ESP	INRC	
MOTA	USS	
1N3002,A,B	♦△MOTA	229-124
ASC	♦DIC	
DII	EDI	
ESP	ETC	
GSE	IDC	
INRB	INRC	
INRI	INRJ	
MULB	PHIC	
PWC	♦SAR	
SCN	SDI	
SEN	SOD	
SOIF	SSI	
TEC	TII	
TIID	TIIF	
TNC	♦USS	
JAN1N3002B,RB	DIC	229-125
ESP	INRC	
MOTA	USS	
1N3003,A,B	♦△MOTA	231- 14
ASC	♦DIC	
DII	EDI	
ESP	ETC	
GSE	IDC	
INRB	INRC	
INRI	INRJ	
PWC	♦SAR	
SCN	SDI	
SEN	SES	
SOIF	SSI	
TIID	TIIF	
TNC	♦USS	
JAN1N3003B,RB	DIC	231- 15
ESP	INRC	
MOTA	USS	
1N3004,A,B	♦△MOTA	232-124
ASC	♦DIC	
DII	EDI	
ESP	ETC	
GSE	IDC	
INRB	INRC	
INRI	INRJ	
PWC	♦SAR	
SCN	SDI	
SEN	SES	
SOD	SOIF	
SSI	TEC	
TII	TIID	
TIIF	TNC	
	♦USS	
JAN1N3004B,RB	DIC	232-125
ESP	INRC	
MOTA	USS	
1N3005,A,B	♦△MOTA	234- 16
ASC	♦DIC	
DII	EDI	
ESP	ETC	
GSE	IDC	
INRB	INRC	
INRI	INRJ	
PWC	♦SAR	
SCN	SDI	
SEN	SES	
SOD	SOIF	
cont.next col		

TYPE No.	MFRS	Pg&Line
1N3005,A,B		
(cont)	SSI	
TEC	TII	
TIID	TIIF	
TNC	♦USS	
JAN1N3005B,RB	DIC	234- 17
ESP	INRC	
	MOTA	
1N3006,A,B	♦△MOTA	234-129
♦DIC	EDI	
ESP	ETC	
GSE	IDC	
INRB	INRC	
INRI	INRJ	
SAR	SCN	
SDI	SEN	
SOD	SSI	
TEC	TII	
TIID	TIIF	
TNC	♦USS	
1N3007,A,B	♦△MOTA	235-136
ASC	♦DIC	
DII	EDI	
ESP	ETC	
GSE	IDC	
INRB	INRC	
INRI	INRJ	
PWC	♦SAR	
SCN	SDI	
SEN	SES	
SOD	SOIF	
SSI	TEC	
TII	TIID	
TIIF	TNC	
	♦USS	
JAN1N3007B,RB	DIC	235-137
ESP	INRC	
	MOTA	
1N3008,A,B	♦△MOTA	236-169
ASC	♦DIC	
DII	EDI	
ESP	ETC	
GSE	IDC	
INRB	INRC	
INRI	INRJ	
PWC	♦SAR	
SCN	SDI	
SEN	SES	
SOD	SOIF	
SSI	TEC	
TII	TIID	
TIIF	TNC	
	♦USS	
JAN1N3008B,RB	DIC	236-170
ESP	INRC	
	MOTA	
1N3009,A,B	♦△MOTA	238- 27
ASC	♦DIC	
DII	EDI	
ESP	ETC	
GSE	IDC	
INRB	INRC	
INRI	INRJ	
PWC	♦SAR	
SCN	SDI	
SEN	SES	
SOD	SOIF	
SSI	TEC	
TII	TIID	
TIIF	TNC	
	♦USS	
JAN1N3009B,RB	DIC	238- 28
ESP	INRC	
	MOTA	
1N3010,A,B	♦△MOTA	238-159
♦DIC	EDI	
ESP	ETC	
GSE	IDC	
INRB	INRC	
INRI	INRJ	
SAR	SCN	
SDI	SEN	
SOD	SSI	
TEC	TII	
TIID	TIIF	
TNC	♦USS	
1N3011,A,B	♦△MOTA	240- 13
ASC	♦DIC	
DII	EDI	
ESP	ETC	
GSE	IDC	
INRB	INRC	
INRI	INRJ	
PWC	♦SAR	
SCN	SDI	
SEN	SES	
SOD	SOIF	
SSI	TEC	
TII	TIID	
TIIF	TNC	
	♦USS	
JAN1N3011B,RB	DIC	240- 14
ESP	INRC	
	MOTA	
1N3012,A,B	♦△MOTA	241- 22
ASC	♦DIC	
DII	EDI	
ESP	ETC	
GSE	IDC	
INRB	INRC	
INRI	INRJ	
PWC	♦SAR	
SCN	SDI	
cont.next col.		

TYPE No.	MFRS	Pg&Line
1N3012,A,B		
(cont)	SEN	
SES	SOD	
SOIF	SSI	
TEC	TIID	
TIIF	TNC	
	♦USS	
JAN1N3012B,RB	ESP	241- 23
INRC	MOTA	
1N3013,A,B	♦△MOTA	241-140
♦DIC	EDI	
ESP	ETC	
GSE	IDC	
INRB	INRC	
INRI	INRJ	
SAR	SCN	
SDI	SEN	
SOD	SSI	
TEC	TIID	
TIIF	TNC	
	♦USS	
1N3014,A,B	♦△MOTA	242-139
ASC	♦DIC	
DII	EDI	
ESP	ETC	
GSE	IDC	
INRB	INRC	
INRI	INRJ	
PWC	♦SAR	
SCN	SDI	
SEN	SES	
SOD	SOIF	
SSI	TEC	
TIID	TIIF	
TNC	♦USS	
JAN1N3014B,RB	ESP	242-140
INRC	MOTA	
1N3015,A,B	♦△MOTA	244- 2
ASC	♦DIC	
DII	EDI	
ESP	ETC	
GSE	IDC	
INRB	INRC	
INRI	INRJ	
PWC	♦SAR	
SCN	SDI	
SEN	SES	
SOD	SSI	
TEC	TIID	
TIIF	TNC	
	♦USS	
JAN1N3015B,RB	ESP	244- 3
INRC	MOTA	
1N3016	APD	177-147
ASC	CODI	
♦DIC	ESMF	
ESP	ETC	
GSE	IDC	
INRB	INRC	
INRI	INRJ	
ITT	MISI	
MSC	SAR	
SEN	SES	
SOIF	SSI	
TEC	TNC	
UNI	USS	
1N3016A	ASC	177-148
CODI	♦DIC	
ESMF	ESP	
ETC	GSE	
IDC	INRB	
INRC	INRI	
INRJ	ITT	
MISI	MSC	
SAR	SEN	
SES	SOIF	
SSI	TEC	
TNC	UNI	
	USS	
1N3016B	ASC	177-149
CODI	♦DIC	
♦ESMF	ESP	
ETC	GSE	
IDC	INRB	
INRC	INRI	
INRJ	ITT	
MISI	MSC	
NPC	SAR	
SEN	SES	
SOIF	SSI	
TEC	TNC	
UNI	USS	
JAN1N3016B	CODI	177-150
DIC	INRC	
MOTA	TEC	
TRW	USS	
1N3017	APD	180- 15
ASC	CODI	
♦DIC	ESMF	
ESP	ETC	
GSE	IDC	
INRB	INRC	
INRI	INRJ	
ITT	MISI	
MSC	SAR	
SDI	SEN	
SES	SOIF	
SSI	TEC	
TNC	UNI	
	USS	
1N3017A	ASC	180- 16
CODI	♦DIC	
ESMF	ESP	
cont.next page		

Δ-Registered with JEDEC by this manufacturer

♦-Copy of mfr's data sheet may be ordered from D.A.T.A.

1. TYPE No. CROSS INDEX

IN TYPE NUMBER SEQUENCE

TYPE No.	MFRS	Pg&Line
1N3017A		
(cont)	ETC	
	GSE	
	IDC	
	INRB	
	INRC	
	INRI	
	INRJ	
	ITT	
	MISI	
	MSC	
	SAR	
	SDI	
	SEN	
	SES	
	SOIF	
	SSI	
	TEC	
	TNC	
	UNI	
	USS	
1N3017B	ASC	180- 17
	CODI	♦DIC
	♦ESMF	ESP
	ETC	GSE
	IDC	INRB
	INRC	INRI
	INRJ	ITT
	MISI	MSC
	NPC	SAR
	SDI	SEN
	SES	SOIF
	SSI	TEC
	TNC	UNI
		USS
JAN1N3017B	CODI	180- 18
	DIC	INRC
	MOTA	TEC
	TRW	USS
1N3018	APD	182- 64
	ASC	CODI
	♦DIC	ESMF
	ESP	ETC
	GSE	IDC
	INRB	INRC
	INRI	INRJ
	ITT	MISI
	MSC	SAR
	SDI	SEN
	SES	SOIF
	SSI	TEC
	TNC	UNI
		USS
1N3018A	ASC	182- 65
	CODI	♦DIC
	ESMF	ESP
	ETC	GSE
	IDC	INRB
	INRC	INRI
	INRJ	ITT
	MISI	MSC
	SAR	SDI
	SEN	SES
	SOIF	SSI
	TEC	TNC
	UNI	USS
1N3018B	ASC	182- 66
	CODI	♦DIC
	♦ESMF	ESP
	ETC	GSE
	IDC	INRB
	INRC	INRI
	INRJ	ITT
	MISI	MSC
	NPC	SAR
	SDI	SEN
	SES	SOIF
	SSI	TEC
	TNC	UNI
		USS
JAN1N3018B	CODI	182- 67
	DIC	INRC
	MOTA	TEC
	TRW	USS
1N3019	APD	185-172
	ASC	CODI
	♦DIC	ESMF
	ESP	ETC
	GSE	IDC
	INRB	INRC
	INRI	INRJ
	ITT	MISI
	MSC	SAR
	SDI	SEN
	SES	SOIF
	SSI	TEC
	TNC	UNI
		USS
1N3019A	ASC	185-173
	CODI	♦DIC
	ESMF	ESP
	ETC	GSE
	IDC	INRB
	INRC	INRI
	INRJ	ITT
	MISI	MSC
	SAR	SDI
	SEN	SES
	SOIF	SSI
	TEC	TNC
	UNI	USS
1N3019B	ASC	185-174
	CODI	♦DIC
	♦ESMF	ESP
	ETC	GSE
	IDC	INRB
	INRC	INRI
	INRJ	ITT
	MISI	MSC
	NPC	SAR
	SDI	SEN
	SES	SOIF
cont next col		

TYPE No.	MFRS	Pg&Line
1N3019B		
(cont)	SSI	
	TEC	TNC
	UNI	USS
JAN1N3019B	CODI	186- 1
	DIC	INRC
	MOTA	TEC
	TRW	USS
1N3020	APD	188- 72
	ASC	CODI
	♦DIC	ESMF
	ESP	ETC
	GSE	IDC
	INRB	INRC
	INRI	INRJ
	ITT	MISI
	MSC	SAR
	SDI	SEN
	SES	SOIF
	SSI	TEC
	TNC	UNI
		USS
1N3020A	ASC	188- 73
	CODI	♦DIC
	ESMF	ESP
	ETC	GSE
	IDC	INRB
	INRC	INRI
	INRJ	ITT
	MISI	MSC
	SAR	SDI
	SEN	SES
	SOIF	SSI
	TEC	TNC
	UNI	USS
1N3020B	ASC	188- 74
	CODI	♦DIC
	♦ESMF	ESP
	ETC	GSE
	IDC	INRB
	INRC	INRI
	INRJ	ITT
	MISI	MSC
	NPC	SAR
	SDI	SEN
	SES	SOIF
	SSI	TEC
	TNC	UNI
		USS
JAN1N3020B	CODI	188- 75
	DIC	ESP
	INRC	MOTA
	TEC	TRW
		USS
1N3021	APD	190- 66
	ASC	CODI
	♦DIC	ESMF
	ESP	ETC
	GSE	IDC
	INRB	INRC
	INRI	INRJ
	ITT	MISI
	MSC	SAR
	SDI	SEN
	SES	SOIF
	SSI	TEC
	TNC	UNI
		USS
1N3021A	ASC	190- 67
	CODI	♦DIC
	ESMF	ESP
	ETC	GSE
	IDC	INRB
	INRC	INRI
	INRJ	ITT
	MISI	MSC
	SAR	SDI
	SEN	SES
	SOIF	SSI
	TEC	TNC
	UNI	USS
1N3021B	ASC	190- 68
	CODI	♦DIC
	♦ESMF	ESP
	ETC	GSE
	IDC	INRB
	INRC	INRI
	INRJ	ITT
	MISI	MSC
	NPC	SAR
	SDI	SEN
	SES	SOIF
	SSI	TEC
	TNC	UNI
		USS
JAN1N3021B	CODI	190- 69
	DIC	ESP
	INRC	MOTA
	TEC	TRW
		USS
1N3022	APD	192-140
	ASC	CODI
	♦DIC	ESMF
	ESP	ETC
	GSE	IDC
	INRB	INRC
	INRI	INRJ
	ITT	MISI
	MSC	SAR
	SDI	SEN
	SES	SOIF
	SSI	TEC
	TNC	UNI
		USS

TYPE No.	MFRS	Pg&Line
1N3022A	ASC	192-141
	CODI	♦DIC
	ESMF	ESP
	ETC	GSE
	IDC	INRB
	INRC	INRI
	INRJ	ITT
	MISI	MSC
	SAR	SDI
	SEN	SES
	SOIF	SSI
	TEC	TNC
	UNI	USS
1N3022B	ASC	192-142
	CODI	♦DIC
	♦ESMF	ESP
	ETC	GSE
	IDC	INRB
	INRC	INRI
	INRJ	ITT
	MISI	MSC
	NPC	SAR
	SDI	SEN
	SES	SOIF
	SSI	TEC
	TNC	UNI
		USS
JAN1N3022B	CODI	192-143
	DIC	ESP
	INRC	MOTA
	TEC	TRW
		USS
1N3023	APD	195- 5
	ASC	CODI
	♦DIC	ESMF
	ESP	ETC
	GSE	IDC
	INRB	INRC
	INRI	INRJ
	ITT	MISI
	MSC	SAR
	SDI	SEN
	SES	SOIF
	SSI	TEC
	TNC	UNI
		USS
1N3023A	ASC	195- 6
	CODI	♦DIC
	ESMF	ESP
	ETC	GSE
	IDC	INRB
	INRC	INRI
	INRJ	ITT
	MISI	MSC
	SAR	SDI
	SEN	SES
	SOIF	SSI
	TEC	TNC
	UNI	USS
1N3023B	ASC	195- 7
	CODI	♦DIC
	♦ESMF	ESP
	ETC	GSE
	IDC	INRB
	INRC	INRI
	INRJ	ITT
	MISI	MSC
	SAR	SDI
	SEN	SES
	SOIF	SSI
	TEC	TNC
	UNI	USS
JAN1N3023B	CODI	195- 8
	DIC	ESP
	INRC	MOTA
	TEC	TRW
		USS
1N3024	APD	197-157
	ASC	CODI
	♦DIC	ESMF
	ESP	ETC
	GSE	IDC
	INRB	INRC
	INRI	INRJ
	ITT	MISI
	MSC	SAR
	SDI	SEN
	SES	SOIF
	SSI	TEC
	TNC	UNI
		USS
1N3024A	ASC	197-158
	CODI	♦DIC
	ESMF	ESP
	ETC	GSE
	IDC	INRB
	INRC	INRI
	INRJ	ITT
	MISI	MSC
	SAR	SDI
	SEN	SES
	SOIF	SSI
	TEC	TNC
	UNI	USS
1N3024B	ASC	197-159
	CODI	♦DIC
	♦ESMF	ESP
	ETC	GSE
	IDC	INRB
	INRC	INRI
	INRJ	ITT
	MISI	MSC
	NPC	SAR
cont next col		

TYPE No	MFRS	Pg&Line
1N3024B		
(cont)	SDI	
	SEN	
	SES	
	SOIF	
	SSI	
	TEC	
	TNC	
	UNI	
JAN1N3024B	CODI	197-160
	DIC	ESP
	INRC	MOTA
	TEC	TRW
		USS
1N3025	APD	199-145
	ASC	CODI
	♦DIC	ESMF
	ESP	ETC
	GSE	IDC
	INRB	INRC
	INRI	INRJ
	ITT	MISI
	MSC	SAR
	SDI	SEN
	SES	SOIF
	SSI	TEC
	TNC	UNI
		USS
1N3025A	ASC	199-146
	CODI	♦DIC
	ESMF	ESP
	ETC	GSE
	IDC	INRB
	INRC	INRI
	INRJ	ITT
	MISI	MSC
	SAR	SDI
	SEN	SES
	SOIF	SSI
	TEC	TNC
	UNI	USS
1N3025B	ASC	199-147
	CODI	♦DIC
	♦ESMF	ESP
	ETC	GSE
	IDC	INRB
	INRC	INRI
	INRJ	ITT
	MISI	MSC
	NPC	SAR
	SDI	SEN
	SES	SOIF
	SSI	TEC
	TNC	UNI
		USS
JAN1N3025B	CODI	199-148
	DIC	ESP
	INRC	MOTA
	TEC	TRW
		USS
1N3026	APD	202- 65
	ASC	CODI
	♦DIC	ESMF
	ESP	ETC
	GSE	IDC
	INRB	INRC
	INRI	INRJ
	ITT	MISI
	MSC	SAR
	SDI	SEN
	SES	SOIF
	SSI	TEC
	TNC	UNI
		USS
1N3026A	ASC	202- 66
	CODI	♦DIC
	ESMF	ESP
	ETC	GSE
	IDC	INRB
	INRC	INRI
	INRJ	ITT
	MISI	MSC
	SAR	SDI
	SEN	SES
	SOIF	SSI
	TEC	TNC
	UNI	USS
1N3026B	ASC	202- 67
	CODI	♦DIC
	♦ESMF	ESP
	ETC	IDC
	INRB	INRC
	INRI	INRJ
	ITT	MISI
	MSC	NPC
	SAR	SDI
	SEN	SES
	SOIF	SSI
	TEC	TNC
	UNI	USS
JAN1N3026B	CODI	202- 68
	DIC	ESP
	INRC	MOTA
	TEC	TRW
		USS
1N3027	APD	205- 14
	ASC	CODI
	♦DIC	ESMF
	ESP	ETC
	IDC	INRB
	INRC	INRI
	INRJ	ITT
	MISI	MSC
	SAR	SDI
	SEN	SES
	SOIF	SSI
cont.next col.		

TYPE No.	MFRS	Pg&Line
1N3027		
(cont.)	TEC	
	TNC	UNI
		USS
1N3027A	ASC	205- 15
	CODI	♦DIC
	ESMF	ESP
	ETC	IDC
	INRB	INRC
	INRI	INRJ
	ITT	MISI
	MSC	SAR
	SDI	SEN
	SES	SOIF
	SSI	TEC
	TNC	UNI
		USS
1N3027B	ASC	205- 16
	CODI	♦DIC
	♦ESMF	ESP
	ETC	GSE
	IDC	INRB
	INRC	INRI
	INRJ	ITT
	MISI	MSC
	NPC	SAR
	SDI	SEN
	SES	SOIF
	SSI	TEC
	TNC	UNI
		USS
JAN1N3027B	CODI	205- 17
	DIC	ESP
	INRC	MOTA
	TEC	TRW
		USS
1N3028	APD	206-177
	ASC	CODI
	♦DIC	ESMF
	ESP	ETC
	GSE	IDC
	INRB	INRC
	INRI	INRJ
	ITT	MISI
	MSC	SAR
	SDI	SEN
	SES	SOIF
	SSI	TEC
	TNC	UNI
		USS
1N3028A	ASC	206-178
	CODI	♦DIC
	ESMF	ESP
	ETC	GSE
	IDC	INRB
	INRC	INRI
	INRJ	ITT
	MISI	MSC
	SAR	SDI
	SEN	SES
	SOIF	SSI
	TEC	TNC
	UNI	USS
1N3028B	ASC	206-179
	CODI	♦DIC
	♦ESMF	ESP
	ETC	GSE
	IDC	INRB
	INRC	INRI
	INRJ	ITT
	MISI	MSC
	NPC	SAR
	SDI	SEN
	SES	SOIF
	SSI	TEC
	TNC	UNI
		USS
JAN1N3028B	CODI	206-180
	DIC	ESP
	INRC	MOTA
	TEC	TRW
		USS
1N3029	APD	208-163
	ASC	CODI
	♦DIC	ESMF
	ESP	ETC
	GSE	IDC
	INRB	INRC
	INRI	INRJ
	ITT	MISI
	MSC	SAR
	SDI	SEN
	SES	SOIF
	SSI	TEC
	TNC	UNI
		USS
1N3029A	ASC	208-164
	CODI	♦DIC
	ESMF	ESP
	ETC	GSE
	IDC	INRB
	INRC	INRI
	INRJ	ITT
	MISI	MSC
	SAR	SDI
	SEN	SES
	SOIF	SSI
	TEC	TNC
	UNI	USS
1N3029B	ASC	208-165
	CODI	♦DIC
	♦ESMF	ESP
	ETC	GSE
cont next page		

△-Registered with JEDEC by this manufacturer

♦-Copy of mfr's data sheet may be ordered from D.A.T.A.

1. TYPE No. CROSS INDEX

IN TYPE NUMBER SEQUENCE

TYPE No.	MFRS	Pg&Line
1N3029B		
(cont)	IDC	
INRB	INRC	
INRI	INRJ	
ITT	MISI	
MSC	NPC	
SAR	SDI	
SEN	SES	
SOIF	SSI	
TEC	TNC	
UNI	USS	
JAN1N3029B	CODI	208-166
DIC	ESP	
INRC	MOTA	
TEC	TRW	
	USS	
1N3030,A,B	♦△MOTA	211-58
APD	ASC	
CODI	♦DIC	
ESP	ETC	
GSE	IDC	
INRB	INRC	
INRI	INRJ	
ITT	MSC	
SAR	SCN	
SDI	SEN	
SES	SOIF	
SSI	TEC	
TNC	UNI	
	USS	
JAN1N3030B	CODI	211-59
DIC	ESP	
INRC	MOTA	
TEC	TRW	
	USS	
1N3031,A,B	♦△MOTA	213-62
APD	ASC	
CODI	♦DIC	
ESP	ETC	
GSE	IDC	
INRB	INRC	
INRI	INRJ	
ITT	MSC	
SAR	SCN	
SDI	SEN	
SES	SOIF	
SSI	TEC	
TNC	UNI	
	USS	
JAN1N3031B	CODI	213-63
DIC	ESP	
INRC	MOTA	
TEC	TRW	
	USS	
1N3032,A,B	♦△MOTA	215-27
APD	ASC	
CODI	♦DIC	
ESP	ETC	
GSE	IDC	
INRB	INRC	
INRI	INRJ	
ITT	MSC	
SAR	SCN	
SDI	SEN	
SES	SOIF	
SSI	TEC	
TNC	UNI	
	USS	
JAN1N3032B	CODI	215-28
DIC	ESP	
INRC	MOTA	
TEC	TRW	
	USS	
1N3033,A,B	♦△MOTA	216-137
ASC	CODI	
♦DIC	ESP	
ETC	GSE	
IDC	INRB	
INRC	INRI	
INRJ	ITT	
MSC	SAR	
SCN	SDI	
SEN	SES	
SOIF	SSI	
TEC	TNC	
UNI	USS	
JAN1N3033B	CODI	216-138
DIC	ESP	
INRC	MOTA	
TRW	USS	
1N3034,A,B	♦△MOTA	218-36
ASC	CODI	
♦DIC	ESP	
ETC	GSE	
IDC	INRB	
INRC	INRI	
INRJ	ITT	
MSC	SAR	
SCN	SDI	
SEN	SES	
SOIF	SSI	
TEC	TNC	
UNI	USS	
JAN1N3034B	CODI	218-37
DIC	ESP	
INRC	MOTA	
TRW	USS	
1N3035,A,B	♦△MOTA	219-115
ASC	CODI	
♦DIC	ESP	
ETC	GSE	
IDC	INRB	
INRC	INRI	
cont next col		

TYPE No.	MFRS	Pg&Line
1N3035,A,B		
(cont)	INRJ	
ITT	MSC	
SAR	SCN	
SDI	SEN	
SES	SOIF	
SSI	TEC	
TNC	UNI	
	USS	
JAN1N3035B	CODI	219-116
DIC	ESP	
INRC	MOTA	
TRW	USS	
1N3036,A,B	♦△MOTA	221-52
ASC	CODI	
♦DIC	ESP	
ETC	GSE	
IDC	INRB	
INRC	INRI	
INRJ	ITT	
MSC	SAR	
SCN	SDI	
SEN	SES	
SOIF	SSI	
TEC	TNC	
UNI	USS	
JAN1N3036B	CODI	221-53
DIC	ESP	
INRC	MOTA	
TRW	USS	
1N3037,A,B	♦△MOTA	223-6
ASC	CODI	
♦DIC	ESP	
ETC	GSE	
IDC	INRB	
INRC	INRI	
INRJ	ITT	
MSC	SAR	
SCN	SDI	
SEN	SES	
SOIF	SSI	
TEC	TNC	
UNI	USS	
JAN1N3037B	CODI	223-7
DIC	ESP	
INRC	MOTA	
TRW	USS	
1N3038,A,B	♦△MOTA	224-81
ASC	CODI	
♦DIC	ESP	
ETC	GIC	
GSE	IDC	
INRB	INRC	
INRI	INRJ	
ITT	MSC	
SAR	SCN	
SDI	SEN	
SES	SOIF	
SSI	TEC	
TNC	UNI	
	USS	
JAN1N3038B	CODI	224-82
DIC	ESP	
INRC	MOTA	
TRW	USS	
1N3039,A,B	♦△MOTA	226-34
ASC	CODI	
♦DIC	ESP	
ETC	GSE	
IDC	INRB	
INRC	INRI	
INRJ	ITT	
MSC	SAR	
SCN	SDI	
SEN	SES	
SOIF	SSI	
TEC	TNC	
UNI	USS	
JAN1N3039B	CODI	226-35
DIC	ESP	
INRC	MOTA	
TRW	USS	
1N3040,A,B	♦△MOTA	227-90
ASC	CODI	
♦DIC	ESP	
ETC	GSE	
IDC	INRB	
INRC	INRI	
INRJ	ITT	
MSC	SAR	
SCN	SDI	
SEN	SES	
SOIF	SSI	
TEC	TNC	
UNI	USS	
JAN1N3040B	CODI	227-91
DIC	ESP	
INRC	MOTA	
TRW	USS	
1N3041,A,B	♦△MOTA	229-6
ASC	CODI	
♦DIC	ESP	
ETC	GSE	
IDC	INRB	
INRC	INRI	
INRJ	ITT	
MSC	SAR	
SCN	SDI	
SEN	SES	
SOIF	SSI	
TEC	TNC	
UNI	USS	
JAN1N3041B	CODI	229-7
cont next col		

TYPE No.	MFRS	Pg&Line
JAN1N3041B		
(cont.)	DIC	
ESP	INRC	
MOTA	TRW	
	USS	
1N3042,A,B	♦△MOTA	230-86
ASC	CODI	
♦DIC	ESP	
ETC	GSE	
IDC	INRB	
INRC	INRI	
INRJ	ITT	
MSC	SAR	
SCN	SDI	
SEN	SES	
SOIF	SSI	
TEC	TNC	
UNI	USS	
JAN1N3042B	CODI	230-87
DIC	ESP	
INRC	MOTA	
TRW	USS	
1N3043,A,B	♦△MOTA	232-27
ASC	CODI	
♦DIC	ESP	
ETC	GSE	
IDC	INRB	
INRC	INRI	
INRJ	ITT	
MSC	SAR	
SCN	SDI	
SEN	SES	
SOIF	SSI	
TEC	TNC	
UNI	USS	
JAN1N3043B	CODI	232-28
DIC	ESP	
INRC	MOTA	
TRW	USS	
1N3044,A,B	♦△MOTA	233-65
ASC	CODI	
♦DIC	ESP	
ETC	GSE	
IDC	INRB	
INRC	INRI	
INRJ	ITT	
MSC	SAR	
SCN	SDI	
SEN	SES	
SOIF	SSI	
TEC	TNC	
UNI	USS	
JAN1N3044B	CODI	233-66
DIC	ESP	
INRC	MOTA	
TRW	USS	
1N3045,A,B	♦△MOTA	235-35
ASC	CODI	
♦DIC	ESP	
ETC	GSE	
IDC	INRB	
INRC	INRI	
INRJ	ITT	
MSC	SAR	
SCN	SDI	
SEN	SES	
SOIF	SSI	
TEC	TNC	
UNI	USS	
JAN1N3045B	CODI	235-36
DIC	ESP	
INRC	MOTA	
	TRW	
1N3046,A,B	♦△MOTA	236-58
ASC	CODI	
♦DIC	ESP	
ETC	GSE	
IDC	INRB	
INRC	INRI	
INRJ	ITT	
MSC	SAR	
SCN	SDI	
SEN	SES	
SOIF	SSI	
TEC	TNC	
UNI	USS	
JAN1N3046B	CODI	236-59
DIC	ESP	
INRC	MOTA	
	TRW	
1N3047,A,B	♦△MOTA	237-98
ASC	CODI	
♦DIC	ESP	
ETC	GSE	
IDC	INRB	
INRC	INRI	
INRJ	ITT	
MSC	SAR	
SCN	SDI	
SEN	SES	
SOIF	SSI	
TEC	TNC	
UNI	USS	
JAN1N3047B	CODI	237-99
DIC	ESP	
INRC	MOTA	
	TRW	
1N3048,A,B	♦△MOTA	239-72
ASC	CODI	
♦DIC	ESP	
ETC	GSE	
IDC	INRB	
INRC	INRI	
cont next col		

TYPE No.	MFRS	Pg&Line
1N3048,A,B		
(cont)	INRJ	
ITT	MSC	
SAR	SCN	
SDI	SEN	
SES	SOIF	
SSI	TEC	
TNC	UNI	
	USS	
JAN1N3048B	CODI	239-73
DIC	ESP	
INRC	MOTA	
	TRW	
1N3049,A,B	♦△MOTA	240-103
ASC	CODI	
♦DIC	ESP	
ETC	GSE	
IDC	INRB	
INRC	INRI	
INRJ	ITT	
MSC	SAR	
SCN	SDI	
SEN	SES	
SOIF	SSI	
TEC	TNC	
UNI	USS	
JAN1N3049B	CODI	240-104
ESP	INRC	
MOTA	TRW	
1N3050,A,B	♦△MOTA	242-40
ASC	CODI	
♦DIC	ESP	
ETC	GSE	
IDC	INRB	
INRC	INRI	
INRJ	ITT	
MSC	SAR	
SCN	SDI	
SEN	SES	
SOIF	SSI	
TEC	TNC	
UNI	USS	
JAN1N3050B	CODI	242-41
ESP	INRC	
MOTA	TRW	
1N3051,A,B	♦△MOTA	243-81
ASC	CODI	
♦DIC	ESP	
ETC	GSE	
IDC	INRB	
INRC	INRI	
INRJ	ITT	
MSC	SAR	
SCN	SDI	
SEN	SES	
SOIF	SSI	
TEC	TNC	
UNI	USS	
JAN1N3051B	CODI	243-82
ESP	INRC	
MOTA	TRW	
1N3052	△TRW	407-18
CODI	♦DIC	
EDI	ITT	
SCN	SCO	
SEN	SET	
SOD	SSI	
	♦TEC	
1N3053	△TRW	407-92
CODI	♦DIC	
EDI	ITT	
SCN	SCO	
♦SEN	SET	
SOD	SSI	
	♦TEC	
1N3054	△TRW	408-105
CODI	♦DIC	
EDI	ITT	
SCN	SCO	
SEN	SET	
SOD	SSI	
	♦TEC	
1N3055	△TRW	409-51
CODI	♦DIC	
EDI	ITT	
SCN	SCO	
SEN	SET	
SOD	SSI	
	♦TEC	
1N3056	△TRW	410-9
CODI	♦DIC	
EDI	ITT	
SCN	SCO	
SEN	SET	
SOD	SSI	
	♦TEC	
1N3057	△TRW	410-67
CODI	♦DIC	
EDI	ITT	
SCN	SCO	
SEN	SET	
SOD	SSI	
	♦TEC	
1N3058	△TRW	410-95
CODI	♦DIC	
EDI	ITT	
SCN	SCO	
♦SEN	SET	
SOD	SSI	
	♦TEC	
1N3059	△TRW	411-58
CODI	♦DIC	
EDI	ITT	
cont next col		

TYPE No.	MFRS	Pg&Line
1N3059		
(cont.)	SCN	
SCO	SEN	
SET	SOD	
SSI	♦TEC	
1N3060	△TRW	411-84
CODI	♦DIC	
EDI	ITT	
SCN	SCO	
SEN	SET	
SOD	SSI	
	♦TEC	
1N3061	△TRW	412-21
CODI	♦DIC	
EDI	ITT	
SCN	SCO	
SET	SOD	
SSI	♦TEC	
1N3062	♦△FSC	274-62
AMD	♦BNT	
CODI	EMLS	
HSC	IDC	
ITT	NJRC	
QUA	RAYN	
SDI	SES	
SGSI	SOD	
TEC	TIIB	
TIID	♦TIIF	
TRW	TSC	
1N3063	△FSC	275-18
AMD	BNT	
CODI	EMLS	
ESMF	GESY	
GIC	HSC	
IDC	ITT	
MISI	NECJ	
NJRC	NPC	
♦QUA	RAYN	
SDI	SES	
SGSI	SOD	
TEC	TIIB	
TIID	TIIF	
TRW	TSC	
1N3064	△FSC	275-19
AMD	APD	
BNT	CODI	
EMLS	ESMF	
♦GESY	GIC	
HSC	IDC	
ITT	MIC	
MISI	♦MULB	
NJRC	♦NPC	
PHIC	♦QUA	
RAYN	SDI	
SES	SGSI	
SOD	TEC	
♦TII	TIIB	
TIID	♦TIIF	
TRW	TSC	
JAN1N3064	FSC	270-65
ITT	RAYN	
TEC	TSC	
1N3064M	♦MSC	275-20
1N3065	△FSC	275-21
AMD	BNT	
CODI	EMLS	
HSC	IDC	
ITT	NJRC	
QUA	RAYN	
SDI	SES	
SGSI	SOD	
TEC	TIIB	
TIID	♦TIIF	
1N3066	△FSC	274-63
AMD	BNT	
CODI	EMLS	
HSC	IDC	
ITT	NJRC	
QUA	RAYN	
SDI	SES	
SGSI	SOD	
TEC	TIIB	
TIID	♦TIIF	
1N3067	△FSC	267-44
AMD	BNT	
CODI	EMLS	
GESY	HSC	
IDC	ITT	
QUA	RAYN	
SDI	SES	
SGSI	SOD	
TEC	TIIB	
TIID	♦TIIF	
	TSC	
1N3068	△FSC	267-81
AMD	BNT	
CODI	EMLS	
GESY	HSC	
IDC	ITT	
NJRC	QUA	
RAYN	SDI	
SES	SGSI	
SOD	TEC	
TIIB	TIID	
♦TIIF	TSC	
1N3069	AMD	274-19
BNT	CODI	
EMLS	♦ESMF	
IDC	MISI	
NJRC	RAYN	
SDI	SES	
SGSI	TEC	
TIIB	TIID	
TIIF	TSC	

△-Registered with JEDEC by this manufacturer

♦-Copy of mfr's data sheet may be ordered from D.A.T.A.

1. TYPE No. CROSS INDEX

IN TYPE NUMBER SEQUENCE

TYPE No	MFRS	Pg&Line
1N3069M	♦MSC	274-26
1N3070	△FSC	281-104
AMD	BNT	
CODI	ESMF	
HSC	IDC	
ITT	MISI	
NJRC	QUA	
RAYN	SDI	
SES	SGSI	
SSI	TEC	
♦TII	TIIB	
TIID	♦TIIF	
	TSC	
JAN1N3070	FSC	281-58
RAYN	TII	
	TSC	
1N3071	△FSC	281-105
AMD	BNT	
CODI	ESMF	
HSC	IDC	
ITT	MISI	
NJRC	QUA	
RAYN	SDI	
SES	SGSI	
SSI	TEC	
TIID	♦TIIF	
	TSC	
1N3072	△TEC	292-108
EDL	SCN	
	UPI	
1N3073	△TEC	299-22
EDL	IDC	
SCN	UPI	
1N3074	△TEC	307-57
EDL	IDC	
SCN	UPI	
1N3075	△TEC	309-92
EDL	IDC	
SCN	UPI	
1N3076	△TEC	319-16
EDL	SCN	
	UPI	
1N3077	△TEC	320-53
EDL	SCN	
	UPI	
1N3078	△TEC	327-29
EDI	EDL	
SCN	UPI	
1N3079	△TEC	328-47
EDL	IDC	
SCN	UPI	
1N3080	△TEC	339-12
EDL	IDC	
	SCN	
1N3081	△TEC	345-108
EDI	EDL	
IDC	SCN	
1N3082	EDL	310-56
ITT	SCN	
TEC	UPI	
1N3083	△TEC	329-22
EDL	ITT	
SCN	UPI	
1N3084	△TEC	346-64
EDL	ITT	
	SCN	
1N3085	△INRC	306-19
INRB	INRI	
INRJ	SES	
	♦SSI	
1N3086	△INRC	317-78
INRB	INRI	
INRJ	SES	
	♦SSI	
1N3087	INRB	326-4
INRC	INRI	
INRJ	SES	
	♦SSI	
1N3088	△INRC	336-107
INRB	INRI	
INRJ	SES	
	♦SSI	
1N3089	△INRC	344-43
INRB	INRI	
INRJ	SES	
	♦SSI	
1N3090	△INRC	353-70
INRB	INRI	
INRJ	SES	
	♦SSI	
1N3091	△INRC	365-79
INRB	INRI	
INRJ	SES	
	♦SSI	
1N3092	△INRC	375-17
INRB	INRI	
INRJ	SES	
	♦SSI	
1N3097	IDC	268-2
1N3098,A	ITT	236-60
SSI	USS	
1N3099,A	ITT	239-74
SSI	USS	
1N3100,A	ITT	242-42
SSI	USS	
1N3101,A	ITT	244-36
	USS	
1N3102,A	USS	237-1
1N3103,A	USS	240-15
1N3104,A	USS	242-141
1N3105,A	USS	244-68
1N3106	ITT	345-49
	SCN	

TYPE No	MFRS	Pg&Line
1N3107	IDC	366-88
	ITT	
	SCN	
1N3109	IDC	366-89
1N3110	GELC	263-89
	IDC	
	ITT	
	SES	
	SSI	
1N3111	△INRC	297-90
	INRB	
	INRI	
	INRJ	♦SSI
1N3112	CODI	179-24
	♦DIC	
	GSE	
	ITT	
	MSC	
1N3118	KMC	572-14
1N3121	△APX	272-97
	GELC	
	GESY	
	IDC	
	ITT	
	PHIC	
	SES	
1N3122	△APX	266-11
	IDC	
	ITT	
	PHIC	
	SES	
	SSI	
1N3123	CODI	269-5
	HSC	
	IDC	
	ITT	
	SDI	
	SES	
	SOD	
	SSI	
	TSC	
	WSI	
1N3124	CODI	269-6
	HSC	
	IDC	
	ITT	
	SDI	
	SES	
	SOD	
	SSI	
	TSC	
	WSI	
1N3125	BNT	273-15
	GELC	
	GESY	
	IDC	
	ITT	
	SDI	
	SES	
	SOD	
1N3128	KMC	571-48
1N3129	KMC	572-58
1N3130	KMC	573-7
1N3138	KMC	573-20
1N3139	△WESY	297-72
	EDL	
	SSI	
	SYN	
1N3140	△WESY	305-93
	EDL	
	SSI	
	SYN	
1N3141	△WESY	308-72
	EDL	
	SSI	
	SYN	
1N3142	△WESY	317-36
	EDL	
	SSI	
	SYN	
1N3143	△MIC	517-80
	♦ALP	
1N3146	△IDC	266-36
	ITT	
	SES	
	SSI	
1N3147	APD	251-25
	TSC	
	UPI	
1N3148	IDC	183-203
	♦MSC	
	TSC	
1N3151	△INRC	402-76
	INRB	
	INRI	
	INRJ	
	ITT	
	SOD	
1N3154	♦△MOTA	183-150
	CODI	
	♦CRL	
	♦DIC	
	GSE	
	IDC	
	INRB	
	INRC	
	INRI	
	INRJ	
	ITT	
	KSC	
	♦MSC	
	SDI	
	SOIF	
	TEC	
	TNC	
	TRW	
	TSC	
	USS	
	WSI	
JAN1N3154	DIC	183-160
	MOTA	
	MSC	
	TEC	
	USS	
1N3154A	♦△MOTA	183-151
	CODI	
	♦CRL	
	♦DIC	
	GSE	
	IDC	
	INRB	
	INRC	
	INRI	
	INRJ	
	ITT	
	KSC	
	♦MSC	
	SDI	
	SOIF	
	TEC	
	TNC	
	TRW	
	TSC	
	USS	
	WSI	
1N3155	♦△MOTA	183-152
	CODI	
	♦CRL	
	♦DIC	
	GSE	
	IDC	
	INRB	
	INRC	
	INRI	
	INRJ	
	ITT	
	KSC	
	♦MSC	
	SDI	
	SOIF	
	TEC	
	TNC	
	TRW	
	TSC	
	USS	
	WSI	
JAN1N3155	DIC	183-161
	MOTA	
	MSC	
	TEC	
	USS	
1N3155A	♦△MOTA	183-153
	CODI	
	♦CRL	
	♦DIC	
	GSE	
	IDC	
	INRB	
	INRC	
	INRI	
	INRJ	
	ITT	
	KSC	
	♦MSC	
cont next col		

TYPE No.	MFRS	Pg&Line
1N3155A		
(cont)	SDI	
	SOIF	
	TEC	
	TNC	
	TRW	
	TSC	
	USS	
	WSI	
1N3156	♦△MOTA	183-154
	CODI	
	♦CRL	
	♦DIC	
	GSE	
	IDC	
	INRB	
	INRC	
	INRI	
	INRJ	
	ITT	
	♦MSC	
	SDI	
	SOIF	
	TEC	
	TNC	
	TRW	
	TSC	
	USS	
	WSI	
JAN1N3156	DIC	183-162
	MOTA	
	MSC	
	TEC	
	USS	
1N3156A	♦△MOTA	183-155
	CODI	
	♦CRL	
	♦DIC	
	GSE	
	IDC	
	INRB	
	INRC	
	INRI	
	INRJ	
	ITT	
	♦MSC	
	SDI	
	SOIF	
	TEC	
	TNC	
	TRW	
	TSC	
	USS	
	WSI	
1N3157	♦△MOTA	183-156
	CODI	
	♦CRL	
	♦DIC	
	GSE	
	IDC	
	INRB	
	INRC	
	INRI	
	INRJ	
	ITT	
	♦MSC	
	SDI	
	SOIF	
	TEC	
	TRW	
	TSC	
	USS	
	WSI	
JAN1N3157	DIC	183-163
	MOTA	
	MSC	
	TEC	
	USS	
1N3157A	CODI	183-157
	♦CRL	
	♦DIC	
	GSE	
	IDC	
	♦MOTA	
	♦MSC	
	SDI	
	SOIF	
	TEC	
	TRW	
	TSC	
	USS	
1N3159	IDC	265-28
	SSI	
1N3160	UPI	251-2
		298-33
1N3161	△WESY	297-110
	EDL	
	INRB	
	INRC	
	INRI	
	INRJ	
	SAR	
	SES	
	SSI	
	TNC	
	TUNL	
1N3162	△WESY	306-54
	EDL	
	INRB	
	INRC	
	INRI	
	INRJ	
	SAR	
	SES	
	SSI	
	TNC	
	TUNL	
1N3163	△WESY	308-108
	EDL	
	INRB	
	INRC	
	INRI	
	INRJ	
	SAR	
	SES	
	SSI	
	TNC	
	TUNL	
1N3164	△WESY	318-4
	EDL	
	ETC	
	INRB	
	INRC	
	INRI	
	INRJ	
	SAR	
	SES	
	SSI	
	TNC	
	TUNL	
JAN1N3164,R	WESY	319-9
1N3165	△WESY	319-96
	EDL	
	INRB	
	INRC	
	INRI	
	INRJ	
	SAR	
	SES	
	SSI	
	TNC	
	TUNL	
1N3166	△WESY	326-39
	EDL	
	INRB	
	INRC	
	INRI	
	INRJ	
	SAR	
	SES	
	SSI	
	TNC	
	TUNL	
1N3167	△WESY	327-100
	EDL	
	INRB	
	INRC	
	INRI	
	INRJ	
	SAR	
	SES	
	SSI	
	TNC	
	TUNL	
1N3168	△WESY	337-42
	EDL	
	ETC	
	HSC	
	INRB	
	INRC	
	INRI	
	INRJ	
	SAR	
	SES	
	SSI	
	TNC	
	TUNL	
JAN1N3168,R	♦WESY	338-87
1N3169	△WESY	344-76
	EDL	
	INRB	
	INRC	
	INRI	
	INRJ	
	SAR	
	SES	
	SSI	
	TNC	
	TUNL	

TYPE No.	MFRS	Pg&Line
1N3170	△WESY	353-107
	EDL	
	HSC	
	INRB	
	INRC	
	INRI	
	INRJ	
	SAR	
	SES	
	SSI	
	TNC	
	TUNL	
JAN1N3170,R	♦WESY	358-92
1N3171	SES	358-8
	SSI	
1N3171A	△WESY	358-9
	EDL	
	INRB	
	INRC	
	INRI	
	INRJ	
	SES	
	SSI	
	SYN	
	TNC	
1N3172	HSC	366-1
	SES	
	SSI	
JAN1N3172,R	none	369-16
1N3172A	△WESY	366-2
	EDL	
	INRB	
	INRC	
	INRI	
	INRJ	
	SES	
	SSI	
	SYN	
	TNC	
1N3173	SES	368-48
	SSI	
1N3173A	EDL	368-49
	INRB	
	INRC	
	INRI	
	INRJ	
	SES	
	SSI	
	SYN	
	TNC	
	WESY	
1N3174	HSC	375-45
	SES	
	SSI	
JAN1N3174,R	none	380-38
1N3174A	EDL	375-46
	INRB	
	INRC	
	INRI	
	INRJ	
	SES	
	SSI	
	SYN	
	TNC	
	WESY	
1N3175	△WESY	380-47
	HSC	
	INRB	
	INRC	
	INRI	
	INRJ	
	SES	
	SSI	
	TNC	
JAN1N3175,R	none	383-4
1N3176	△WESY	383-13
	HSC	
	INRB	
	INRC	
	INRI	
	INRJ	
	SES	
	SSI	
	TNC	
JAN1N3176,R	none	386-105
1N3177	△WESY	386-110
	HSC	
	INRB	
	INRC	
	INRI	
	INRJ	
	SES	
	SSI	
	TNC	
JAN1N3177,R	none	389-6
1N3179	△TRW	258-4
	TSC	
1N3180	△TRW	255-25
	TSC	
1N3181	△INRC	181-43
	CRL	
	DIC	
	IDC	
	INRB	
	INRI	
	INRJ	
	MSC	
	TSC	
1N3182	△APX	553-25
	CODI	
	♦EAS	
	♦NPC	
	PHIC	
	SOD	
	TRW	
1N3183	SCN	327-36
	SOD	
1N3184	SCN	339-38
	SOD	
1N3185	SCN	355-20
	SOD	
1N3186	SCN	369-95
	SOD	
1N3187	SCN	384-53
	SOD	
1N3188	SCN	389-106
	SOD	
1N3189	ASC	312-34
	EDL	
	♦GIC	
	ITT	
	QUA	
	SAR	
	SCN	
	SES	
	SOD	
	SOIF	
	SSI	
	TEC	
	TNC	
	UPI	
JAN1N3189	GIC	310-57
	SEN	
	TRW	
1N3190	ASC	331-15
	EDL	
	♦GIC	
	IDC	
	ITT	
	QUA	
	SAR	
	SCN	
	SEN	
	SES	
	SOD	
	SOIF	
	SSI	
	TEC	
	TNC	
JAN1N3190	GIC	329-23
	SEN	
	TRW	
1N3191	ASC	348-37
	EDL	
	♦GIC	
	IDC	
	ITT	
	QUA	
	SAR	
	SCN	
	SEN	
	SES	
	SOD	
	SOIF	
	SSI	
	TEC	
	TNC	

TYPE No.	MFRS	Pg&Line
JAN1N3191	GIC	346-65
	SEN	
	TRW	
1N3193	♦△RCA	311-25
	♦DETM	
	EDI	
	EDL	
	INRB	
	INRC	
	INRI	
	INRJ	
	ITT	
	QUA	
	SCN	
	SOD	
	SSI	
	TEC	
	TOSJ	
	UPI	
1N3194	♦△RCA	329-110
	♦DETM	
	EDI	
	EDL	
	IDC	
	INRB	
	INRC	
	INRI	
	INRJ	
	ITT	
	QUA	
	SCN	
	SOD	
	SSI	
	TEC	
	TOSJ	
	UPI	
1N3195	♦△RCA	347-31
	♦DETM	
	EDI	
	EDL	
	INRB	
	INRC	
	INRI	
	INRJ	
	ITT	
	QUA	
	SCN	
	SOD	
	SSI	
	TEC	
	TOSJ	
1N3196	♦△RCA	359-61
	♦DETM	
	EDI	
	EDL	
	IDC	
	INRB	
	INRC	
	INRI	
	INRJ	
	ITT	
	QUA	
	SCN	
	SOD	
	SSI	
	TEC	
1N3197	IDC	267-104
	SSI	
1N3198	IDC	165-146
	TSC	
1N3199	△TEC	183-146
	CODI	
	DIC	
	GSE	
	IDC	
	♦MSC	
	TNC	
	TSC	
1N3200	△TEC	183-147
	CODI	
	DIC	
	GSE	
	IDC	
	♦MSC	
	TNC	
	TSC	
1N3201	△TEC	183-148
	CODI	
	DIC	
	GSE	
	IDC	
	♦MSC	
	TNC	
	TSC	
1N3202	△TEC	183-149
	CODI	
	CRL	
	DIC	
	GSE	
	IDC	
	♦MSC	
	TNC	
	TSC	
1N3203	GELC	269-73
	GIC	
	IDC	
	ITT	
	MSC	
1N3204	IDC	273-86
	ITT	
	SES	
1N3205	♦△ALP	515-56
	MIC	
1N3206	△TRW	277-50
	CODI	
	GIC	
	HSC	
	ITT	
	♦MSC	
	QUA	
	SDI	
	SES	
JAN1N3206	MSC	277-51
1N3207	△TRW	273-47
	CODI	
	IDC	
	ITT	
	♦MSC	
	QUA	
JAN1N3207	MSC	273-48
	TRW	
1N3208	♦△MOTA	296-91
	♦DEL	
	EDL	
	ETC	
	GESY	
	INRB	
	INRC	
	INRI	
	INRJ	
	ITT	
	SAR	
	SCN	
	SOD	
	SSI	
	SYN	
	TEC	
	♦TUNL	
	WESY	
1N3209	♦△MOTA	304-74
	♦DEL	
	EDL	
	ETC	
	GESY	
	IDC	
	INRB	
	INRC	
	INRI	
	INRJ	
	ITT	
	SAR	
	SCN	
	SOD	
	♦SSI	
	SYN	
	TEC	
	♦TUNL	
	WESY	
1N3210	♦△MOTA	315-108
	♦DEL	
	EDL	
	ETC	
	GESY	
	IDC	
	INRB	
	INRC	
	INRI	
	INRJ	
	ITT	
	SAR	
	SCN	
	SOD	
	♦SSI	
	SYN	
	TEC	
	♦TUNL	
	WESY	
1N3211	♦△MOTA	324-87
	EDL	
	ETC	
	GESY	
	INRB	
	INRC	
	INRI	
cont next page		

△-Registered with JEDEC by this manufacturer

♦-Copy of mfr's data sheet may be ordered from D.A.T.A.

1. TYPE No. CROSS INDEX

IN TYPE NUMBER SEQUENCE

TYPE No.	MFRS	Pg&Line
1N3211		
(cont)	INRJ	
ITT	SAR	
SCN	SOD	
♦SSI	SYN	
TEC	♦TUNL	
	WESY	
1N3212	♦△MOTA	335- 3
EDL	ETC	
GESY	IDC	
INRB	INRC	
INRI	INRJ	
ITT	SAR	
SCN	SOD	
♦SSI	SYN	
TEC	♦TUNL	
	WESY	
1N3213	♦△MOTA	343- 29
EDL	ETC	
GESY	INRB	
INRC	INRI	
INRJ	SAR	
SCN	SOD	
♦SSI	TEC	
	♦TUNL	
1N3214	♦△MOTA	352- 3
EDL	GESY	
INRB	INRC	
INRI	INRJ	
SAR	SCN	
SOD	♦SSI	
TEC	♦TUNL	
1N3223	IDC	281- 47
SSI	TSC	
1N3225	ERI	269- 80
GELC	GESY	
	IDC	
1N3227	IDC	299- 52
	ITT	
1N3228	ITT	310- 14
1N3229	ITT	339- 39
1N3230	ITT	346- 25
1N3231	ITT	359- 41
1N3232	IDC	369- 96
	ITT	
1N3233	ITT	377- 78
1N3234	ITT	384- 54
1N3235	ITT	388- 12
1N3236	ITT	389-107
1N3237	EDL	293- 55
IDC	ITT	
1N3238	ITT	299-109
1N3239	ITT	310- 81
	UPI	
1N3240	ITT	329- 51
	UPI	
1N3241	IDC	346- 85
	ITT	
1N3242	ITT	359- 97
1N3243	ITT	370- 36
1N3244	ITT	377- 98
1N3245	ITT	384- 70
1N3246	EDL	293-105
IDC	ITT	
	UPI	
1N3247	ITT	300- 69
	UPI	
1N3248	ITT	311- 54
	UPI	
1N3249	ITT	330- 36
	UPI	
1N3250	ITT	347- 66
1N3251	IDC	360- 49
	ITT	
1N3252	ITT	370- 91
1N3253	♦△RCA	311- 26
EDI	EDL	
INRB	INRC	
INRI	INRJ	
ITT	QUA	
SCN	SOD	
TEC	UPI	
1N3254	♦△RCA	330- 1
EDI	EDL	
INRB	INRC	
INRI	INRJ	
ITT	QUA	
SCN	SOD	
TEC	UPI	
1N3255	♦△RCA	347- 32
EDI	EDL	
INRB	INRC	
INRI	INRJ	
ITT	QUA	
SCN	SOD	
	TEC	
1N3256	♦△RCA	359- 62
EDI	EDL	
INRB	INRC	
INRI	INRJ	
ITT	QUA	
SCN	SOD	
	TEC	
1N3257	△TRW	276- 22
CODI	ITT	
QUA	SES	
TEC	TSC	
1N3258	△TRW	276- 23
CODI	ITT	
QUA	SES	
TEC	TSC	
1N3260	△WESY	297- 94
EDL	ETC	
cont next col.		

TYPE No.	MFRS	Pg&Line
1N3260		
(cont)	GESY	
SAR	SES	
SSI	TUNL	
1N3261	△WESY	306- 34
EDL	ETC	
GESY	SAR	
SES	SSI	
	TUNL	
1N3262	△WESY	308- 95
EDL	ETC	
GESY	SAR	
SES	SSI	
	TUNL	
1N3263	△WESY	317- 93
EDL	ETC	
GESY	SAR	
SES	SSI	
	TUNL	
JAN1N3263,R	♦WESY	319- 7
1N3264	△WESY	319- 88
EDL	ETC	
GESY	SAR	
SES	SSI	
	TUNL	
1N3265	△WESY	326- 19
EDL	ETC	
GESY	SAR	
SES	SSI	
	TUNL	
1N3266	△WESY	327- 94
EDL	ETC	
GESY	SAR	
SES	SSI	
	TUNL	
1N3267	△WESY	337- 17
EDL	ETC	
GESY	HSC	
SAR	SES	
SSI	TUNL	
JAN1N3267,R	♦WESY	338- 85
1N3268	△WESY	344- 57
EDL	GESY	
SAR	SES	
	TUNL	
1N3269	△WESY	353- 85
EDL	GESY	
HSC	SAR	
SES	SSI	
	TUNL	
JAN1N3269,R	WESY	358- 90
1N3270	△WESY	357-109
EDL	GESY	
SES	SSI	
1N3271	△WESY	365- 93
EDL	GESY	
HSC	SES	
	SSI	
JAN1N3271,R	none	369- 14
1N3272	△WESY	368- 39
EDL	GESY	
SES	SSI	
1N3273	△WESY	375- 31
EDL	GESY	
HSC	SES	
	SSI	
JAN1N3273,R	none	380- 34
1N3274	△WESY	380- 35
HSC	SES	
	SSI	
1N3275	△WESY	383- 3
HSC	SES	
	SSI	
1N3276	△WESY	386-103
HSC	SES	
	SSI	
1N3277	△DII	311- 23
EDL	ETC	
ITT	QUA	
SAR	UPI	
1N3278	DII	329-108
EDL	ETC	
ITT	QUA	
	UPI	
1N3279	△DII	347- 29
EDL	ETC	
ITT	QUA	
	SES	
1N3280	△DII	360- 22
EDL	ETC	
ITT	QUA	
1N3281	△DII	370- 66
EDL	ITT	
	QUA	
1N3282	♦△MOTA	369- 33
CODI	ITT	
PPC	SCO	
	SOIF	
1N3283	CODI	384- 2
ITT	♦MOTA	
PPC	SCO	
	SOIF	
1N3284	♦△MOTA	389- 45
CODI	ITT	
PPC	SCO	
	SOIF	
1N3285	♦△MOTA	392- 19
CODI	ITT	
PPC	SCO	
	SOIF	
1N3286	♦△MOTA	393- 95
CODI	ITT	
PPC	SCO	
	SOIF	

TYPE No.	MFRS	Pg&Line
1N3287	△TEC	165- 2
IDC	ITT	
	SDI	
1N3287W	IDC	246- 18
ITT	UPI	
JAN1N3287W	GIC	165- 3
	TEC	
1N3288	EDL	306- 2
INRB	INRC	
INRI	INRJ	
SES	♦SSI	
	WESY	
1N3288A	△WESY	306- 3
ETC	INRB	
INRC	INRI	
INRJ	SES	
	♦SSI	
1N3289	♦△GESY	317- 56
EDL	INRB	
INRC	INRI	
INRJ	♦SAR	
SES	♦SSI	
TUNL	WESY	
JAN1N3289,R	GESY	319- 4
	WESY	
1N3289A	△WESY	317- 57
ETC	INRB	
INRC	INRI	
INRJ	SES	
	♦SSI	
1N3289R	♦GESY	317- 58
1N3290	♦△GESY	325- 94
EDL	INRB	
INRC	INRI	
INRJ	♦SAR	
SES	♦SSI	
TUNL	WESY	
1N3290A	△WESY	325- 95
ETC	INRB	
INRC	INRI	
INRJ	SES	
	♦SSI	
1N3290R	♦GESY	325- 96
1N3291	♦△GESY	336- 82
EDL	INRB	
INRC	INRI	
INRJ	♦SAR	
SES	♦SSI	
TUNL	WESY	
JAN1N3291,R	GESY	338- 82
	WESY	
1N3291A	△WESY	336- 83
ETC	INRB	
INRC	INRI	
INRJ	SES	
	♦SSI	
1N3291R	♦GESY	336- 84
1N3292	♦△GESY	344- 18
EDL	INRB	
INRC	INRI	
INRJ	♦SAR	
SES	♦SSI	
TUNL	WESY	
1N3292A	SES	344- 19
	SSI	
1N3292B	△WESY	344- 20
ETC	INRB	
INRC	INRI	
INRJ	SES	
♦SSI	TNC	
1N3292R	♦GESY	344- 21
1N3293	♦△GESY	353- 44
EDL	INRB	
INRC	INRI	
INRJ	♦SAR	
SES	♦SSI	
TUNL	WESY	
JAN1N3293,R	GESY	358- 87
	WESY	
1N3293A	△WESY	353- 45
INRB	INRC	
INRI	INRJ	
SES	♦SSI	
1N3293R	♦GESY	353- 46
1N3294	♦△GESY	365- 57
EDL	INRB	
INRC	INRI	
INRJ	SES	
♦SSI	WESY	
JAN1N3294,R	GESY	369- 11
	WESY	
1N3294A	△WESY	365- 58
INRB	INRC	
INRI	INRJ	
SES	♦SSI	
1N3294R	♦GESY	365- 59
1N3295	♦△GESY	374-107
EDL	INRB	
INRC	INRI	
INRJ	SES	
♦SSI	WESY	
JAN1N3295,R	GESY	380- 2
1N3295A	△WESY	374-108
INRB	INRC	
INRI	INRJ	
SES	♦SSI	
1N3295R	♦GESY	374-109
1N3296	♦△GESY	380- 9
EDL	INRB	
INRC	INRI	
INRJ	SES	
♦SSI	WESY	
JAN1N3296,R	none	382- 85

TYPE No.	MFRS	Pg&Line
1N3296A	△WESY	380- 10
INRB	INRC	
INRI	INRJ	
SES	♦SSI	
1N3296R	♦GESY	380- 11
1N3297	EDL	382- 88
INRB	INRC	
INRI	INRJ	
SES	SSI	
1N3297A	△WESY	382- 89
INRB	INRC	
INRI	INRJ	
SES	SSI	
1N3298	△TRW	269- 68
HSC	IDC	
ITT	RAYN	
SDI	SES	
	SSI	
1N3298A	ITT	274- 41
	SSI	
1N3299	APD	598- 15
1N3300	APD	498- 76
1N3300A	APD	498- 75
1N3305	♦△DIC	178-149
ETC	GSE	
INRB	INRC	
INRI	INRJ	
ITT	MOTA	
SCN	SDI	
SES	SOIF	
TEC	TNC	
1N3305A	♦△DIC	178-150
ETC	GSE	
INRB	INRC	
INRI	INRJ	
ITT	MOTA	
SDI	SES	
SOIF	TEC	
	TNC	
1N3305B	♦△DIC	178-151
ETC	GSE	
INRB	INRC	
INRI	INRJ	
ITT	MOTA	
SDI	SES	
SOIF	TEC	
	TNC	
JAN1N3305B,RB	DIC	178-152
	MOTA	
1N3306	♦△DIC	180-189
ETC	GSE	
IDC	INRB	
INRC	INRI	
INRJ	ITT	
MOTA	SCN	
SDI	SES	
SOIF	TEC	
	TNC	
1N3306A	♦△DIC	180-190
ETC	GSE	
IDC	INRB	
INRC	INRI	
INRJ	ITT	
MOTA	SDI	
SES	SOIF	
TEC	TNC	
1N3306B	♦△DIC	180-191
ETC	GSE	
IDC	INRB	
INRC	INRI	
INRJ	ITT	
MOTA	SDI	
SES	SOIF	
TEC	TNC	
JAN1N3306B,RB	DIC	180-192
	MOTA	
1N3307	♦△DIC	183- 65
ETC	GSE	
INRB	INRC	
INRI	INRJ	
ITT	MOTA	
SCN	SDI	
SES	SOD	
SOIF	TEC	
	TNC	
1N3307A	♦△DIC	183- 66
ETC	GSE	
INRB	INRC	
INRI	INRJ	
ITT	MOTA	
SDI	SES	
SOD	SOIF	
TEC	TNC	
1N3307B	♦△DIC	183- 67
ETC	GSE	
INRB	INRC	
INRI	INRJ	
ITT	MOTA	
SDI	SES	
SOD	SOIF	
TEC	TNC	
JAN1N3307B,RB	DIC	183- 68
	MOTA	
1N3308	♦△DIC	186-172
ETC	GSE	
INRB	INRC	
INRI	INRJ	
ITT	MOTA	
SCN	SDI	
SES	SOD	
SOIF	TEC	
	TNC	
1N3308A	♦△DIC	186-173
cont.next col		

TYPE No.	MFRS	Pg&Line
1N3308A		
(cont)	ETC	
GSE	INRB	
INRC	INRI	
INRJ	ITT	
MOTA	SDI	
SES	SOD	
SOIF	TEC	
	TNC	
1N3308B	♦△DIC	186-174
ETC	GSE	
INRB	INRC	
INRI	INRJ	
ITT	MOTA	
SDI	SES	
SOD	SOIF	
TEC	TNC	
JAN1N3308B,RB	DIC	186-175
	MOTA	
1N3309	♦△DIC	189- 89
ETC	GSE	
INRB	INRC	
INRI	INRJ	
ITT	MOTA	
MULB	SCN	
SDI	SES	
SOD	SOIF	
TEC	TNC	
1N3309A	♦△DIC	189- 90
ETC	GSE	
INRB	INRC	
INRI	INRJ	
ITT	MOTA	
MULB	SDI	
SES	SOD	
SOIF	TEC	
	TNC	
1N3309B	♦△DIC	189- 91
ETC	GSE	
INRB	INRC	
INRI	INRJ	
ITT	MOTA	
MULB	SDI	
SES	SOD	
SOIF	TEC	
	TNC	
JAN1N3309B,RB	DIC	189- 92
	MOTA	
1N3310	♦△DIC	191- 57
ETC	GSE	
INRB	INRC	
INRI	INRJ	
ITT	MOTA	
MULB	SCN	
SDI	SES	
SOD	SOIF	
TEC	TNC	
1N3310A	♦△DIC	191- 58
ETC	GSE	
INRB	INRC	
INRI	INRJ	
ITT	MOTA	
MULB	SDI	
SES	SOD	
SOIF	TEC	
	TNC	
JAN1N3310B,RB	DIC	191- 60
	MOTA	
1N3311	♦△DIC	193-182
ETC	GSE	
IDC	INRB	
INRC	INRI	
INRJ	ITT	
MOTA	MULB	
SCN	SDI	
SES	SOD	
SOIF	TEC	
	TNC	
1N3311A	♦△DIC	193-183
ETC	GSE	
IDC	INRB	
INRC	INRI	
INRJ	ITT	
MOTA	MULB	
SDI	SES	
SOD	SOIF	
TEC	TNC	
1N3311B	♦△DIC	193-184
ETC	GSE	
IDC	INRB	
INRC	INRI	
INRJ	ITT	
MOTA	MULB	
SDI	SES	
SOD	SOIF	
TEC	TNC	
JAN1N3311B,RB	DIC	193-185
	MOTA	
1N3312	♦△DIC	195-191
ETC	GSE	
INRB	INRC	
INRI	INRJ	
ITT	MOTA	
MULB	SCN	
cont.next page		

△-Registered with JEDEC by this manufacturer

♦-Copy of mfr's data sheet may be ordered from D.A.T.A.

1. TYPE No. CROSS INDEX

IN TYPE NUMBER SEQUENCE

TYPE No.	MFRS	Pg&Line
1N3312 (cont.)	SDI	
	SES	
	SOD	
	SOIF	
	TEC	
	TNC	
1N3312A	♦△DIC	195-192
	ETC	
	GSE	
	INRB	
	INRC	
	INRI	
	INRJ	
	ITT	
	MOTA	
	MULB	
	SDI	
	SES	
	SOD	
	SOIF	
	TEC	
	TNC	
1N3312B	♦△DIC	195-193
	ETC	
	GSE	
	INRB	
	INRC	
	INRI	
	INRJ	
	ITT	
	MOTA	
	MULB	
	SDI	
	SES	
	SOD	
	SOIF	
	TEC	
	TNC	
JAN1N3312B,RB	DIC	195-194
	MOTA	
1N3313	♦△DIC	196-154
	ETC	
	GSE	
	INRB	
	INRC	
	INRI	
	INRJ	
	ITT	
	MOTA	
	MULB	
	SCN	
	SDI	
	SES	
	SOD	
	SOIF	
	TEC	
	TNC	
1N3313A	♦△DIC	196-155
	ETC	
	GSE	
	INRB	
	INRC	
	INRI	
	INRJ	
	ITT	
	MOTA	
	MULB	
	SDI	
	SES	
	SOD	
	SOIF	
	TEC	
	TNC	
1N3313B	♦△DIC	196-156
	ETC	
	GSE	
	INRB	
	INRC	
	INRI	
	INRJ	
	ITT	
	MOTA	
	MULB	
	SDI	
	SES	
	SOD	
	SOIF	
	TEC	
	TNC	
1N3314	♦△DIC	198-185
	ETC	
	GSE	
	INRB	
	INRC	
	INRI	
	INRJ	
	ITT	
	MOTA	
	MULB	
	SCN	
	SDI	
	SES	
	SOD	
	SOIF	
	TEC	
	TNC	
1N3314A	♦△DIC	198-186
	ETC	
	GSE	
	INRB	
	INRC	
	INRI	
	INRJ	
	ITT	
	MOTA	
	MULB	
	SDI	
	SES	
	SOD	
	SOIF	
	TEC	
	TNC	
1N3314B	♦△DIC	198-187
	ETC	
	GSE	
	INRB	
	INRC	
	INRI	
	INRJ	
	ITT	
	MOTA	
	MULB	
	SDI	
	SES	
	SOD	
	SOIF	
	TEC	
	TNC	
JAN1N3314B,RB	DIC	198-188
	MOTA	
1N3315	♦△DIC	200-131
	ETC	
	GSE	
	INRB	
	INRC	
	INRI	
	INRJ	
	ITT	
	MOTA	
	MULB	
	SCN	
	SDI	
	SES	
	SOD	
	SOIF	
	TEC	
	TNC	
1N3315A	♦△DIC	200-132
	ETC	
	GSE	
	INRB	
	INRC	
	INRI	
	INRJ	
	ITT	
	MOTA	
	MULB	
	SDI	
	SES	
	SOD	
	SOIF	
	TEC	
	TNC	
1N3315B	♦△DIC	200-133
	ETC	
	GSE	
	INRB	
	INRC	
	INRI	
	INRJ	
	ITT	
	MOTA	
	MULB	
	SDI	
	SES	
	SOD	
	SOIF	
	TEC	
	TNC	
JAN1N3315B,RB	DIC	200-134
	MOTA	
1N3316	♦△DIC	201-71
	ETC	
	GSE	
	INRB	
	INRC	

cont next col

TYPE No.	MFRS	Pg&Line
1N3316 (cont)	INRI	
	INRJ	
	ITT	
	MOTA	
	MULB	
	SCN	
	SDI	
	SOD	
	TEC	
	TNC	
1N3316A	♦△DIC	201-72
	ETC	
	GSE	
	INRB	
	INRC	
	INRI	
	INRJ	
	ITT	
	MOTA	
	MULB	
	SDI	
	SOD	
	TEC	
	TNC	
1N3316B	♦△DIC	201-73
	ETC	
	GSE	
	INRB	
	INRC	
	INRI	
	INRJ	
	ITT	
	MOTA	
	MULB	
	SDI	
	SOD	
	TEC	
	TNC	
1N3317	♦△DIC	203-76
	♦ETC	
	GSE	
	INRB	
	INRC	
	INRI	
	INRJ	
	ITT	
	MOTA	
	MULB	
	SCN	
	SDI	
	SES	
	SOD	
	SOIF	
	TEC	
	TNC	
1N3317A	♦△DIC	203-77
	♦ETC	
	GSE	
	INRB	
	INRC	
	INRI	
	INRJ	
	ITT	
	MOTA	
	MULB	
	SDI	
	SES	
	SOD	
	SOIF	
	TEC	
	TNC	
1N3317B	♦△DIC	203-78
	♦ETC	
	GSE	
	INRB	
	INRC	
	INRI	
	INRJ	
	ITT	
	MOTA	
	MULB	
	SDI	
	SES	
	SOD	
	SOIF	
	TEC	
	TNC	
JAN1N3317B,RB	DIC	203-79
	MOTA	
1N3318	♦△DIC	204-31
	ETC	
	GSE	
	INRB	
	INRC	
	INRI	
	INRJ	
	ITT	
	MOTA	
	MULB	
	SCN	
	SDI	
	SOD	
	TEC	
	TNC	
1N3318A	♦△DIC	204-32
	ETC	
	GSE	
	INRB	
	INRC	
	INRI	
	INRJ	
	ITT	
	MOTA	
	MULB	
	SDI	
	SOD	
	TEC	
	TNC	
1N3318B	♦△DIC	204-33
	ETC	
	GSE	
	INRB	
	INRC	
	INRI	
	INRJ	
	ITT	
	MOTA	
	MULB	
	SDI	
	SOD	
	TEC	
	TNC	
1N3319	♦△DIC	206-2
	ETC	
	GSE	
	INRB	
	INRC	
	INRI	
	INRJ	
	ITT	
	MOTA	
	MULB	
	SCN	
	SDI	
	SES	
	SOD	
	SOIF	
	TEC	
	TNC	
1N3319A	♦△DIC	206-3
	ETC	
	GSE	
	INRB	
	INRC	
	INRI	
	INRJ	
	ITT	
	MOTA	
	MULB	
	SDI	
	SES	
	SOD	
	SOIF	
	TEC	
	TNC	
1N3319B	♦△DIC	206-4
	ETC	
	GSE	
	INRB	
	INRC	
	INRI	
	INRJ	
	ITT	
	MOTA	
	MULB	
	SDI	
	SES	
	SOD	
	SOIF	
	TEC	
	TNC	
JAN1N3319B,RB	DIC	206-5
	MOTA	
1N3320	♦△DIC	207-198
	ETC	
	GSE	
	INRB	
	INRC	
	INRI	
	INRJ	
	ITT	
	MOTA	
	MULB	
	SCN	
	SDI	
	SES	
	SOD	
	SOIF	
	TEC	
	TNC	

TYPE No.	MFRS	Pg&Line
1N3320A	♦△DIC	207-199
	ETC	
	GSE	
	INRB	
	INRC	
	INRI	
	INRJ	
	ITT	
	MOTA	
	MULB	
	SDI	
	SES	
	SOD	
	SOIF	
	TEC	
	TNC	
1N3320B	♦△DIC	207-200
	ETC	
	GSE	
	INRB	
	INRC	
	INRI	
	INRJ	
	ITT	
	MOTA	
	MULB	
	SDI	
	SES	
	SOD	
	SOIF	
	TEC	
	TNC	
JAN1N3320B,RB	DIC	208-1
	MOTA	
1N3321	♦△DIC	209-159
	ETC	
	GSE	
	INRB	
	INRC	
	INRI	
	INRJ	
	ITT	
	MOTA	
	MULB	
	SCN	
	SDI	
	SES	
	SOD	
	SOIF	
	TEC	
	TNC	
1N3321A	♦△DIC	209-160
	ETC	
	GSE	
	INRB	
	INRC	
	INRI	
	INRJ	
	ITT	
	MOTA	
	MULB	
	SDI	
	SES	
	SOD	
	SOIF	
	TEC	
	TNC	
1N3321B	♦△DIC	209-161
	ETC	
	GSE	
	INRB	
	INRC	
	INRI	
	INRJ	
	ITT	
	MOTA	
	MULB	
	SDI	
	SES	
	SOD	
	SOIF	
	TEC	
	TNC	
JAN1N3321B,RB	DIC	209-162
	MOTA	
1N3322	♦△DIC	210-75
	ETC	
	GSE	
	INRB	
	INRC	
	INRI	
	INRJ	
	ITT	
	MOTA	
	MULB	
	SCN	
	SDI	
	SOD	
	TEC	
	TNC	
1N3322A	♦△DIC	210-76
	ETC	
	GSE	
	INRB	
	INRC	
	INRI	
	INRJ	
	ITT	
	MOTA	
	MULB	
	SDI	
	SOD	
	TEC	
	TNC	
1N3322B	♦△DIC	210-77
	ETC	
	GSE	
	INRB	
	INRC	
	INRI	
	INRJ	
	ITT	
	MOTA	
	MULB	
	SDI	
	SOD	
	TEC	
	TNC	
1N3323	♦△DIC	212-66
	ETC	
	INRB	
	INRC	
	INRI	
	INRJ	
	ITT	
	MOTA	
	MULB	
	SCN	
	SDI	
	SES	
	SOD	
	SOIF	
	TEC	
	TNC	
1N3323A	♦△DIC	212-67
	ETC	
	INRB	
	INRC	
	INRI	
	INRJ	
	ITT	
	MOTA	
	MULB	
	SDI	
	SES	
	SOD	
	SOIF	
	TEC	
	TNC	
1N3323B	♦△DIC	212-68
	ETC	
	INRB	
	INRC	
	INRI	
	INRJ	
	ITT	
	MOTA	
	MULB	
	SDI	
	SES	
	SOD	
	SOIF	
	TEC	
	TNC	
JAN1N3323B,RB	DIC	212-69
	MOTA	
1N3324	♦△DIC	214-60
	ETC	
	GSE	
	INRB	
	INRC	
	INRI	
	INRJ	
	ITT	
	MOTA	
	MULB	
	SCN	
	SDI	
	SES	
	SOD	
	SOIF	
	TEC	
	TNC	
1N3324A	♦△DIC	214-61
	ETC	
	GSE	
	INRB	
	INRC	
	INRI	
	INRJ	

cont next col

TYPE No.	MFRS	Pg&Line
1N3324A (cont)	ITT	
	MOTA	
	MULB	
	SDI	
	SES	
	SOD	
	SOIF	
	TEC	
	TNC	
1N3324B	♦△DIC	214-62
	ETC	
	GSE	
	INRB	
	INRC	
	INRI	
	INRJ	
	ITT	
	MOTA	
	MULB	
	SDI	
	SES	
	SOD	
	SOIF	
	TEC	
	TNC	
JAN1N3324B,RB	DIC	214-63
	MOTA	
1N3325	♦△DIC	216-21
	ETC	
	GSE	
	INRB	
	INRC	
	INRI	
	INRJ	
	ITT	
	MOTA	
	MULB	
	SCN	
	SDI	
	SES	
	SOD	
	SOIF	
	TEC	
	TNC	
1N3325A	♦△DIC	216-22
	ETC	
	GSE	
	INRB	
	INRC	
	INRI	
	INRJ	
	ITT	
	MOTA	
	MULB	
	SDI	
	SES	
	SOD	
	SOIF	
	TEC	
	TNC	
1N3325B	♦△DIC	216-23
	ETC	
	GSE	
	INRB	
	INRC	
	INRI	
	INRJ	
	ITT	
	MOTA	
	MULB	
	SDI	
	SES	
	SOD	
	SOIF	
	TEC	
	TNC	
JAN1N3325B,RB	DIC	216-24
	MOTA	
1N3326	♦△DIC	217-106
	ETC	
	GSE	
	INRB	
	INRC	
	INRI	
	INRJ	
	ITT	
	MOTA	
	MULB	
	SCN	
	SDI	
	SES	
	SOD	
	SOIF	
	TEC	
	TNC	
1N3326A	♦△DIC	217-107
	ETC	
	GSE	
	INRB	
	INRC	
	INRI	
	INRJ	
	ITT	
	MOTA	
	MULB	
	SDI	
	SES	
	SOD	
	SOIF	
	TEC	
	TNC	
1N3326B	♦DIC	217-108
	INRI	
JAN1N3326B,RB	DIC	217-109
	MOTA	
1N3327	♦△DIC	218-179
	ETC	
	GSE	
	INRB	
	INRC	
	INRI	
	INRJ	
	ITT	
	MOTA	
	MULB	
	SCN	
	SDI	
	SES	
	SOD	
	SOIF	
	TEC	
	TNC	
1N3327A	♦△DIC	218-180
	ETC	
	GSE	
	INRB	
	INRC	
	INRI	
	INRJ	
	ITT	
	MOTA	
	MULB	
	SDI	
	SES	
	SOD	
	SOIF	
	TEC	
	TNC	
1N3327B	♦△DIC	218-181
	ETC	
	GSE	
	INRB	
	INRC	
	INRI	
	INRJ	
	ITT	
	MOTA	
	MULB	
	SDI	
	SES	
	SOD	
	SOIF	
	TEC	
	TNC	
JAN1N3327B,RB	DIC	218-182
	MOTA	
1N3328	♦△DIC	220-64
	ETC	
	GSE	
	INRB	
	INRC	
	INRI	
	INRJ	
	ITT	
	MOTA	
	MULB	
	SCN	
	SDI	
	SES	
	SOD	
	SOIF	
	TEC	
	TNC	
1N3328A	♦△DIC	220-65
	ETC	
	GSE	
	INRB	
	INRC	
	INRI	
	INRJ	
	ITT	
	MOTA	
	MULB	
	SDI	
	SES	
	SOD	

cont next col

TYPE No.	MFRS	Pg&Line
1N3328A (cont.)	SOIF	
	TEC	
	TNC	
1N3328B	♦△DIC	220-66
	ETC	
	GSE	
	INRB	
	INRC	
	INRI	
	INRJ	
	ITT	
	MOTA	
	MULB	
	SDI	
	SES	
	SOD	
	SOIF	
	TEC	
	TNC	
JAN1N3328B,RB	DIC	220-67
	MOTA	
1N3329	♦△DIC	220-145
	ETC	
	GSE	
	INRB	
	INRC	
	INRI	
	INRJ	
	ITT	
	MOTA	
	MULB	
	SCN	
	SDI	
	SOD	
	TEC	
	TNC	
1N3329A	♦△DIC	220-146
	ETC	
	GSE	
	INRB	
	INRC	
	INRI	
	INRJ	
	ITT	
	MOTA	
	MULB	
	SDI	
	SOD	
	TEC	
	TNC	
1N3329B	♦△DIC	220-147
	ETC	
	GSE	
	INRB	
	INRC	
	INRI	
	INRJ	
	ITT	
	MOTA	
	MULB	
	SDI	
	SOD	
	TEC	
	TNC	
1N3330	♦△DIC	222-17
	ETC	
	GSE	
	INRB	
	INRC	
	INRI	
	INRJ	
	ITT	
	MOTA	
	MULB	
	SCN	
	SDI	
	SES	
	SOD	
	SOIF	
	TEC	
	TNC	
1N3330A	♦△DIC	222-18
	ETC	
	GSE	
	INRB	
	INRC	
	INRI	
	INRJ	
	ITT	
	MOTA	
	MULB	
	SDI	
	SES	
	SOD	
	SOIF	
	TEC	
	TNC	
1N3330B	♦△DIC	222-19
	ETC	
	GSE	
	INRB	
	INRC	
	INRI	
	INRJ	
	ITT	
	MOTA	
	MULB	
	SDI	
	SES	
	SOD	
	SOIF	
	TEC	
	TNC	
JAN1N3330B,RB	DIC	222-20
	MOTA	
1N3331	♦△DIC	222-115
	ETC	
	GSE	
	INRB	
	INRC	
	INRI	
	INRJ	
	ITT	
	MOTA	
	MULB	
	SCN	
	SDI	
	SOD	
	TEC	
	TNC	
1N3331A	♦△DIC	222-116
	ETC	
	GSE	
	INRB	
	INRC	
	INRI	
	INRJ	
	ITT	
	MOTA	
	MULB	
	SDI	
	SOD	
	TEC	
	TNC	
1N3331B	♦△DIC	222-117
	ETC	
	GSE	
	INRB	
	INRC	
	INRI	
	INRJ	
	ITT	
	MOTA	
	MULB	
	SDI	
	SOD	
	TEC	
	TNC	
1N3332	♦△DIC	223-134
	ETC	
	GSE	
	INRB	
	INRC	
	INRI	
	INRJ	
	ITT	
	MOTA	
	MULB	
	SCN	
	SDI	
	SES	
	SOD	
	SOIF	
	TEC	
	TNC	
1N3332A	♦△DIC	223-135
	ETC	
	GSE	
	INRB	
	INRC	
	INRI	
	INRJ	
	ITT	
	MOTA	
	MULB	
	SDI	
	SES	
	SOD	
	SOIF	
	TEC	
	TNC	
1N3332B	♦△DIC	223-136
	ETC	
	GSE	
	INRB	
	INRC	
	INRI	
	INRJ	

cont next page

△-Registered with JEDEC by this manufacturer

♦-Copy of mfr's data sheet may be ordered from D.A.T.A.

1. TYPE No. CROSS INDEX

IN TYPE NUMBER SEQUENCE

TYPE No.	MFRS	Pg&Line
1N3332B		
(cont)	ITT	
	MOTA	
	MULB	
	SDI	
	SES	
	SOD	
	SOIF	
	TEC	
	TNC	
JAN1N3332B,RB	DIC	223-137
	MOTA	
1N3333	♦△DIC	223-186
	ETC	
	GSE	
	INRB	
	INRC	
	INRI	
	INRJ	
	ITT	
	MOTA	
	MULB	
	SCN	
	SDI	
	SOD	
	TEC	
	TNC	
1N3333A	♦△DIC	223-187
	ETC	
	GSE	
	INRB	
	INRC	
	INRI	
	INRJ	
	ITT	
	MOTA	
	MULB	
	SDI	
	SOD	
	TEC	
	TNC	
1N3333B	♦△DIC	223-188
	ETC	
	GSE	
	INRB	
	INRC	
	INRI	
	INRJ	
	ITT	
	MOTA	
	MULB	
	SDI	
	SOD	
	TEC	
	TNC	
1N3334	♦△DIC	225-62
	ETC	
	GSE	
	INRB	
	INRC	
	INRI	
	INRJ	
	ITT	
	MOTA	
	MULB	
	SCN	
	SDI	
	SES	
	SOD	
	SOIF	
	TEC	
	TNC	
1N3334A	♦△DIC	225-63
	ETC	
	GSE	
	INRB	
	INRC	
	INRI	
	INRJ	
	ITT	
	MOTA	
	MULB	
	SDI	
	SES	
	SOD	
	SOIF	
	TEC	
	TNC	
1N3334B	♦△DIC	225-64
	ETC	
	GSE	
	INRB	
	INRC	
	INRI	
	INRJ	
	ITT	
	MULB	
	SDI	
	SES	
	SOD	
	SOIF	
	TEC	
	TNC	
JAN1N3334B,RB	DIC	225-65
	MOTA	
1N3335	♦△DIC	226-167
	ETC	
	GSE	
	INRB	
	INRC	
	INRI	
	INRJ	
	ITT	
	MOTA	
	MULB	
	SCN	
	SDI	
	SES	
	SOD	
	SOIF	
	TEC	
	TNC	
1N3335A	♦△DIC	226-168
	ETC	
	GSE	
	INRB	
	INRC	
	INRI	
	INRJ	
	ITT	
	MOTA	
	MULB	
	SDI	
	SES	
	SOD	
	SOIF	
	TEC	
	TNC	
1N3335B	♦△DIC	226-169
	ETC	
	GSE	
	INRB	
	INRC	
	INRI	
	INRJ	
	ITT	
	MOTA	
	MULB	
	SDI	
	SES	
	SOD	
	SOIF	
	TEC	
	TNC	
JAN1N3335B,RB	DIC	226-170
	MOTA	
1N3336	♦△DIC	228-56
	ETC	
	GSE	
	INRB	
	INRC	
	INRI	
	INRJ	
	ITT	
	MOTA	
	MULB	
	SCN	
	SDI	
	SES	
	SOD	
	SOIF	
	TEC	
	TNC	
1N3336A	♦△DIC	228-57
	ETC	
	GSE	
	INRB	
	INRC	
	INRI	
	INRJ	
	ITT	
	MOTA	
	MULB	
	SDI	
	SES	
	SOD	
	SOIF	
	TEC	
	TNC	
1N3336B	♦△DIC	228-58
	ETC	
	GSE	
	INRB	
	INRC	
	INRI	
	INRJ	
	ITT	
	MOTA	
	MULB	
	SDI	
cont next col		

TYPE No.	MFRS	Pg&Line
1N3336B		
(cont)	SES	
	SOD	
	SOIF	
	TEC	
	TNC	
JAN1N3336B,RB	DIC	228-59
	MOTA	
1N3337	♦△DIC	229-155
	ETC	
	GSE	
	INRB	
	INRC	
	INRI	
	INRJ	
	ITT	
	MOTA	
	MULB	
	SCN	
	SDI	
	SOD	
	SOIF	
	TEC	
	TNC	
1N3337A	♦△DIC	229-156
	ETC	
	GSE	
	INRB	
	INRC	
	INRI	
	INRJ	
	ITT	
	MOTA	
	MULB	
	SDI	
	SOD	
	SOIF	
	TEC	
	TNC	
1N3337B	♦△DIC	229-157
	ETC	
	GSE	
	INRB	
	INRC	
	INRI	
	INRJ	
	ITT	
	MOTA	
	MULB	
	SDI	
	SOD	
	SOIF	
	TEC	
	TNC	
JAN1N3337B,RB	DIC	229-158
	MOTA	
1N3338	♦△DIC	231-43
	ETC	
	GSE	
	INRB	
	INRC	
	INRI	
	INRJ	
	ITT	
	MOTA	
	SCN	
	SDI	
	SES	
	SOD	
	SOIF	
	TEC	
	TNC	
	TUNL	
1N3338A	♦△DIC	231-44
	ETC	
	GSE	
	INRB	
	INRC	
	INRI	
	INRJ	
	ITT	
	MOTA	
	SDI	
	SES	
	SOD	
	SOIF	
	TEC	
	TNC	
1N3338B	♦△DIC	231-45
	ETC	
	GSE	
	INRB	
	INRC	
	INRI	
	INRJ	
	ITT	
	MOTA	
	SDI	
	SES	
	SOD	
	SOIF	
	TEC	
	TNC	
JAN1N3338B,RB	DIC	231-46
	MOTA	
1N3339	♦△DIC	232-150
	ETC	
	GSE	
	INRB	
	INRC	
	INRI	
	INRJ	
	ITT	
	MOTA	
	SCN	
	SDI	
	SES	
	SOD	
	SOIF	
	TEC	
	TNC	
1N3339A	♦△DIC	232-151
	ETC	
	GSE	
	INRB	
	INRC	
	INRI	
	INRJ	
	ITT	
	MOTA	
	SDI	
	SES	
	SOD	
	SOIF	
	TEC	
	TNC	
1N3339B	♦△DIC	232-152
	ETC	
	GSE	
	INRB	
	INRC	
	INRI	
	INRJ	
	ITT	
	MOTA	
	SDI	
	SES	
	SOD	
	SOIF	
	TEC	
	TNC	
JAN1N3339B,RB	DIC	232-153
	MOTA	
1N3340	♦△DIC	234-49
	ETC	
	GSE	
	INRB	
	INRC	
	INRI	
	INRJ	
	ITT	
	MOTA	
	SCN	
	SDI	
	SES	
	SOD	
	SOIF	
	TEC	
	TNC	
1N3340A	♦△DIC	234-50
	ETC	
	GSE	
	INRB	
	INRC	
	INRI	
	INRJ	
	ITT	
	MOTA	
	SDI	
	SES	
	SOD	
	SOIF	
	TEC	
	TNC	
1N3340B	♦△DIC	234-51
	ETC	
	GSE	
	INRB	
	INRC	
	INRI	
	INRJ	
	ITT	
	MOTA	
	SDI	
	SES	
	SOD	
	SOIF	
	TEC	
	TNC	
JAN1N3340B,RB	DIC	234-52
	MOTA	

TYPE No.	MFRS	Pg&Line
1N3341	♦△DIC	234-133
	ETC	
	GSE	
	ITT	
	MOTA	
	SCN	
	SDI	
	SOD	
	TEC	
	TNC	
1N3341A	♦△DIC	234-134
	ETC	
	GSE	
	ITT	
	MOTA	
	SDI	
	SOD	
	TEC	
	TNC	
1N3341B	♦△DIC	234-135
	ETC	
	GSE	
	ITT	
	MOTA	
	SDI	
	SOD	
	TEC	
	TNC	
1N3342	♦△DIC	235-159
	ETC	
	GSE	
	ITT	
	MOTA	
	SCN	
	SDI	
	SES	
	SOD	
	SOIF	
	TEC	
	TNC	
1N3342A	♦△DIC	235-160
	ETC	
	GSE	
	ITT	
	MOTA	
	SDI	
	SES	
	SOD	
	SOIF	
	TEC	
	TNC	
1N3342B	♦△DIC	235-161
	ETC	
	GSE	
	ITT	
	MOTA	
	SDI	
	SES	
	SOD	
	SOIF	
	TEC	
	TNC	
JAN1N3342B,RB	DIC	235-162
	MOTA	
1N3343	♦△DIC	237-26
	ETC	
	GSE	
	ITT	
	MOTA	
	SCN	
	SDI	
	SES	
	SOD	
	SOIF	
	TEC	
	TNC	
1N3343A	♦△DIC	237-27
	ETC	
	GSE	
	ITT	
	MOTA	
	SDI	
	SES	
	SOD	
	SOIF	
	TEC	
	TNC	
1N3343B	♦△DIC	237-28
	ETC	
	GSE	
	ITT	
	MOTA	
	SDI	
	SES	
	SOD	
	SOIF	
	TEC	
	TNC	
JAN1N3343B,RB	DIC	237-29
	MOTA	
1N3344	♦△DIC	238-46
	ETC	
	GSE	
	ITT	
	MOTA	
	SCN	
	SDI	
	SES	
	SOD	
	SOIF	
	TEC	
	TNC	
1N3344A	♦△DIC	238-47
	ETC	
	GSE	
	ITT	
	MOTA	
	SDI	
	SES	
	SOD	
	SOIF	
	TEC	
	TNC	
1N3344B	♦△DIC	238-48
	ETC	
	GSE	
	ITT	
	MOTA	
	SDI	
	SES	
	SOD	
	SOIF	
	TEC	
	TNC	
JAN1N3344B,RB	DIC	238-49
	MOTA	
1N3345	♦△DIC	238-162
	ETC	
	GSE	
	ITT	
	MOTA	
	SCN	
	SDI	
	SOD	
	TEC	
	TNC	
1N3345A	♦△DIC	238-163
	ETC	
	GSE	
	ITT	
	MOTA	
	SDI	
	SOD	
	TEC	
	TNC	
1N3345B	♦△DIC	238-164
	ETC	
	GSE	
	ITT	
	MOTA	
	SDI	
	SOD	
	TEC	
	TNC	
1N3346	♦△DIC	240-43
	ETC	
	GSE	
	ITT	
	MOTA	
	SCN	
	SDI	
	SES	
	SOD	
	SOIF	
	TEC	
	TNC	
1N3346A	♦△DIC	240-44
	ETC	
	GSE	
	ITT	
	MOTA	
	SDI	
	SES	
	SOD	
	SOIF	
	TEC	
	TNC	
1N3346B	♦△DIC	240-45
	ETC	
	GSE	
	ITT	
	MOTA	
	SDI	
	SES	
	SOD	
	SOIF	
	TEC	
	TNC	

TYPE No.	MFRS	Pg&Line
JAN1N3346B,RB	DIC	240-46
	MOTA	
1N3347	♦△DIC	241-38
	ETC	
	GSE	
	ITT	
	MOTA	
	SCN	
	SDI	
	SES	
	SOD	
	SOIF	
	TEC	
	TNC	
1N3347A	♦△DIC	241-39
	ETC	
	GSE	
	ITT	
	MOTA	
	SDI	
	SES	
	SOD	
	SOIF	
	TEC	
	TNC	
1N3347B	♦△DIC	241-40
	ETC	
	GSE	
	ITT	
	MOTA	
	SDI	
	SES	
	SOD	
	SOIF	
	TEC	
	TNC	
JAN1N3347B,RB	DIC	241-41
	MOTA	
1N3348	♦△DIC	241-142
	ETC	
	GSE	
	ITT	
	MOTA	
	SCN	
	SDI	
	SOD	
	TEC	
	TNC	
1N3348A	♦△DIC	241-143
	ETC	
	GSE	
	ITT	
	MOTA	
	SDI	
	SOD	
	TEC	
	TNC	
1N3348B	♦△DIC	241-144
	ETC	
	GSE	
	ITT	
	MOTA	
	SDI	
	SOD	
	TEC	
	TNC	
1N3349	♦△DIC	242-164
	ETC	
	GSE	
	ITT	
	MOTA	
	SCN	
	SDI	
	SES	
	SOD	
	SOIF	
	TEC	
	TNC	
1N3349A	♦△DIC	242-165
	ETC	
	GSE	
	ITT	
	MOTA	
	SDI	
	SES	
	SOD	
	SOIF	
	TEC	
	TNC	
1N3349B	♦△DIC	242-166
	ETC	
	GSE	
	ITT	
	MOTA	
	SDI	
	SES	
	SOD	
	SOIF	
	TEC	
	TNC	
JAN1N3349B,RB	DIC	242-167
	MOTA	
1N3350	♦△DIC	244-21
	ETC	
	GSE	
	ITT	
	MOTA	
	SCN	
	SDI	
	SES	
	SOD	
	TEC	
	TNC	
1N3350A	♦△DIC	244-22
	ETC	
	GSE	
	ITT	
	MOTA	
	SDI	
	SES	
	SOD	
	TEC	
	TNC	
1N3350B	♦△DIC	244-23
	ETC	
	GSE	
	ITT	
	MOTA	
	SDI	
	SES	
	SOD	
	TEC	
	TNC	
JAN1N3350B,RB	DIC	244-24
	MOTA	
1N3353	△PHIL	581-15
1N3392	SDI	165-72
1N3393	SDI	165-100
1N3394	SDI	165-142
1N3395	SDI	166-50
1N3396	IDC	167-28
	SDI	
1N3397	IDC	168-130
	SDI	
1N3398	SDI	170-129
1N3399	IDC	171-77
	SDI	
1N3400	SDI	177-108
1N3401	IDC	182-23
	SDI	
1N3402	SDI	188-22
1N3403	IDC	192-91
	SDI	
1N3404	SDI	197-111
1N3405	SDI	202-18
1N3406	SDI	206-132
1N3407	SDI	211-15
1N3408	SDI	214-172
1N3409	SDI	218-8
1N3410	SDI	221-23
1N3411	SDI	175-12
1N3412	SDI	177-109
1N3413	SDI	179-157
1N3414	IDC	182-24
	SDI	
1N3415	IDC	188-23
	SDI	
1N3416	SDI	192-92
1N3417	SDI	197-112

TYPE No.	MFRS	Pg&Line
1N3418	SDI	202-19
1N3419	SDI	206-133
1N3420	SDI	211-16
1N3421	SDI	213-29
1N3422	SDI	214-173
1N3423	SDI	218-9
1N3424	SDI	221-24
1N3425	SDI	224-59
1N3426	SDI	227-68
1N3427	SDI	230-63
1N3428	SDI	233-42
1N3429	SDI	236-38
1N3430	SDI	239-52
1N3431	SDI	242-20
1N3432	SDI	243-63
1N3464	△GELC	407-14
	SOD	
1N3465	GELC	251-37
	GESY	
	GIC	
	IDC	
	ITT	
	SES	
	UPI	
1N3466	GELC	249-30
	GESY	
	GIC	
	ITT	
	SES	
	TEC	
	UPI	
1N3467	EMLS	265-38
	GELC	
	GIC	
	IDC	
	ITT	
	SES	
	SSI	
	TEC	
1N3468	EMLS	265-39
	GELC	
	GIC	
	IDC	
	ITT	
	SES	
	SSI	
	TEC	
1N3469	IDC	248-77
	ITT	
	SES	
	TEC	
	UPI	
1N3470	IDC	248-78
	ITT	
	SES	
	TEC	
	UPI	
1N3471	IDC	268-92
1N3477,A	CODI	165-130
	CRL	
	DIC	
	GSE	
	IDC	
	MSC	
	TSC	
1N3482	△PHIL	582-74
1N3483	APX	263-63
	IDC	
	ITT	
	PHIC	
	SES	
	SSI	
1N3484	APX	274-60
	IDC	
	ITT	
	PHIC	
	SES	
1N3486	CODI	369-87
	EDI	
	ETC	
	IDC	
	ITT	
	SCN	
	SSI	
1N3487	CODI	377-74
	EDI	
	IDC	
	ITT	
	SCN	
	SSI	
1N3488	△TRW	559-10
	CODI	
	CRY	
	EAS	
1N3489	APD	496-12
1N3489A	APD	496-13
1N3490	APD	496-14
1N3491	♦△TUNL	297-8
	♦DEL	
	INRB	
	INRC	
	INRI	
	INRJ	
	♦MOTA	
	SAR	
	SCN	
	SSI	
	TEC	
	TRW	
1N3492	♦△TUNL	305-3
	♦DEL	
	INRB	
	INRC	
	INRI	
	INRJ	
	♦MOTA	
	SAR	
	SCN	
	SSI	
	TEC	
	TRW	
1N3493	♦△TUNL	316-37
	♦DEL	
	INRB	
	INRC	
	INRI	
	INRJ	
	♦MOTA	
	SAR	
	SCN	
	SSI	
	TEC	
1N3494	♦△TUNL	325-2
	INRB	
	INRC	
	INRI	
	INRJ	
	♦MOTA	
	SAR	
	SCN	
	SSI	
	TEC	
1N3495	♦△TUNL	335-43
	INRB	
	INRC	
	INRI	
	INRJ	
	♦MOTA	
	SAR	
	SCN	
	SSI	
	TEC	
1N3496	△TEC	174-98
	CODI	
	♦DIC	
	GSE	
	IDC	
	INRB	
	INRC	
	INRI	
	INRJ	
	♦MSC	
	SDI	
	SOIF	
	SSI	
	TNC	
	TSC	
	♦USS	
1N3497	△TEC	174-99
	CODI	
	♦DIC	
	GSE	
	IDC	
cont next page		

△-Registered with JEDEC by this manufacturer

♦-Copy of mfr's data sheet may be ordered from D.A.T.A.

1. TYPE No. CROSS INDEX

IN TYPE NUMBER SEQUENCE

TYPE No.	MFRS	Pg&Line
1N3497		
(cont)	INRB	
INRC	INRI	
INRJ	KSC	
♦MSC	SDI	
SOIF	SSI	
TNC	TSC	
	♦USS	
1N3498	△TEC	174-100
CODI	♦DIC	
GSE	IDC	
INRB	INRC	
INRI	INRJ	
KSC	♦MSC	
SDI	SOIF	
SSI	TNC	
TSC	♦USS	
1N3499	△TEC	174-101
CODI	♦DIC	
GSE	IDC	
INRB	INRC	
INRI	INRJ	
♦MSC	SDI	
SEN	SSI	
TNC	TSC	
	♦USS	
1N3500	△TEC	174-102
CODI	♦DIC	
GSE	IDC	
INRB	INRC	
INRI	INRJ	
KSC	♦MSC	
SDI	SOIF	
SSI	TNC	
TSC	♦USS	
1N3501	△TEC	175-163
CODI	♦DIC	
GSE	IDC	
INRB	INRC	
INRI	INRJ	
KSC	MOTA	
♦MSC	SSI	
TNC	TSC	
	♦USS	
1N3502	△TEC	175-164
CODI	♦DIC	
GSE	IDC	
INRB	INRC	
INRI	INRJ	
ITT	MOTA	
♦MSC	SSI	
TNC	TSC	
	♦USS	
1N3503	△TEC	175-165
CODI	♦DIC	
GSE	IDC	
INRB	INRC	
INRI	INRJ	
ITT	KSC	
MOTA	♦MSC	
SSI	TNC	
TSC	♦USS	
1N3503A	CODI	175-166
DIC	GSE	
IDC	SSI	
TEC	TNC	
	TSC	
1N3504	△TEC	175-167
CODI	♦DIC	
GSE	IDC	
INRB	INRC	
INRI	INRJ	
ITT	KSC	
MOTA	♦MSC	
SSI	TNC	
TSC	♦USS	
1N3504A	CODI	175-168
DIC	GSE	
IDC	SSI	
TEC	TNC	
	TSC	
1N3506	△TSC	166-177
CODI	CRL	
♦DIC	GSE	
IDC	ITT	
MSC	SDI	
SSI	TEC	
TEK	TII	
	TNC	
1N3507	△TSC	167-133
CODI	CRL	
♦DIC	GSE	
IDC	ITT	
MSC	SDI	
SSI	TEC	
TEK	TII	
	TNC	
1N3508	△TSC	168-87
CODI	CRL	
♦DIC	GSE	
IDC	ITT	
MSC	SDI	
SSI	TEC	
TEK	TII	
	TNC	
1N3509	△TSC	169-87
CODI	CRL	
♦DIC	GSE	
IDC	ITT	
MSC	SDI	
SSI	TEC	
TEK	TII	
	TNC	
1N3510	△TSC	170-81
CODI	CRL	
♦DIC	GSE	
IDC	INRB	
INRC	INRI	
INRJ	ITT	
MSC	SDI	
SSI	TEC	
TEK	TII	
	TNC	
1N3511	△TSC	171-126
CODI	CRL	
♦DIC	GSE	
IDC	INRB	
INRC	INRI	
INRJ	ITT	
MSC	SDI	
SSI	TEC	
TEK	TII	
	TNC	
1N3512	△TSC	172-166
CODI	CRL	
♦DIC	GSE	
IDC	INRB	
INRC	INRI	
INRJ	ITT	
MSC	SDI	
SSI	TEC	
TEK	TII	
	TNC	
1N3513	△TSC	174-148
CODI	CRL	
♦DIC	GSE	
IDC	INRB	
INRC	INRI	
INRJ	ITT	
MSC	SDI	
SSI	TEC	
TEK	TII	
	TNC	
1N3514	△TSC	177-25
APD	CODI	
CRL	♦DIC	
GSE	IDC	
INRB	INRC	
INRI	INRJ	
ITT	MSC	
SDI	SSI	
TEC	TEK	
TII	TNC	
1N3515	△TSC	179-78
APD	CODI	
CRL	♦DIC	
GSE	IDC	
INRB	INRC	
INRI	INRJ	
ITT	MSC	
SDI	SSI	
TEC	TEK	
TII	TNC	
1N3516	△TSC	181-134
APD	CODI	
CRL	♦DIC	
GSE	IDC	
INRB	INRC	
INRI	INRJ	
ITT	KSC	
MSC	SDI	
SSI	TEC	
TEK	TII	
	TNC	
1N3517	△TSC	185-58
APD	CODI	
CRL	♦DIC	
GSE	IDC	
INRB	INRC	
INRI	INRJ	
ITT	MSC	
SDI	SSI	
TEC	TEK	
TII	TNC	
1N3518	△TSC	187-124
APD	CODI	
CRL	♦DIC	
GSE	IDC	
INRB	INRC	
INRI	INRJ	
ITT	MSC	
SDI	SSI	
TEC	TEK	
TII	TNC	
1N3519	△TSC	189-161
APD	CODI	
CRL	♦DIC	
GSE	IDC	
INRB	INRC	
INRI	INRJ	
ITT	MSC	
SDI	SSI	
TEC	TEK	
TII	TNC	
1N3520	△TSC	192-5
APD	CODI	
CRL	♦DIC	
GSE	IDC	
INRB	INRC	
INRI	INRJ	
ITT	MSC	
SDI	SSI	
TEC	TEK	
TII	TNC	
1N3521	△TSC	194-90
APD	CODI	
cont next col		
1N3521		
(cont)	CRL	
♦DIC	GSE	
IDC	INRB	
INRC	INRI	
INRJ	ITT	
MSC	SDI	
SSI	TEC	
TEK	TNC	
1N3522	△TSC	197-37
APD	CODI	
CRL	♦DIC	
GSE	IDC	
INRB	INRC	
INRI	INRJ	
ITT	MSC	
SDI	SSI	
TEC	TEK	
	TNC	
1N3523	△TSC	199-42
APD	CODI	
CRL	♦DIC	
GSE	IDC	
INRB	INRC	
INRI	INRJ	
ITT	MSC	
SDI	SSI	
TEC	TEK	
	TNC	
1N3524	△TSC	201-122
APD	CODI	
CRL	♦DIC	
GSE	IDC	
INRB	INRC	
INRI	INRJ	
ITT	MSC	
SDI	SSI	
TEC	TEK	
	TNC	
1N3525	△TSC	204-95
APD	CODI	
CRL	♦DIC	
GSE	IDC	
INRB	INRC	
INRI	INRJ	
ITT	MSC	
SDI	SSI	
TEC	TEK	
	TNC	
1N3526	△TSC	206-64
APD	CODI	
CRL	♦DIC	
GSE	IDC	
INRB	INRC	
INRI	INRJ	
ITT	MSC	
SDI	SSI	
TEC	TEK	
	TNC	
1N3527	△TSC	208-62
APD	CODI	
CRL	♦DIC	
GSE	IDC	
INRB	INRC	
INRI	INRJ	
ITT	MSC	
SDI	SSI	
TEC	TEK	
	TNC	
1N3528	△TSC	210-129
APD	CODI	
CRL	♦DIC	
GSE	IDC	
INRB	INRC	
INRI	INRJ	
ITT	MSC	
SDI	SSI	
TEC	TEK	
	TNC	
1N3529	△TSC	212-164
APD	CODI	
CRL	♦DIC	
GSE	IDC	
INRB	INRC	
INRI	INRJ	
ITT	MSC	
SDI	SSI	
TEC	TEK	
	TNC	
1N3530	△TSC	214-115
APD	CODI	
CRL	♦DIC	
GSE	IDC	
INRB	INRC	
INRI	INRJ	
ITT	MSC	
SDI	SSI	
TEC	TEK	
	TNC	
1N3531	△TSC	216-73
CODI	CRL	
♦DIC	GSE	
IDC	ITT	
MSC	SDI	
SSI	TEC	
TEK	TNC	
1N3532	△TSC	217-147
CODI	CRL	
♦DIC	GSE	
IDC	ITT	
MSC	SDI	
SSI	TEC	
TEK	TNC	
1N3533	△TSC	219-52
CODI	CRL	
♦DIC	GSE	
IDC	ITT	
MSC	SDI	
SSI	TEC	
TEK	TNC	
1N3534	△TSC	220-174
CODI	CRL	
♦DIC	GSE	
IDC	ITT	
MSC	SDI	
SSI	TEC	
TEK	TNC	
1N3537	CODI	192-144
DIC	GSE	
IDC	ITT	
MSC	SOD	
	SSI	
1N3539	♦△CRL	581-16
	SSI	
1N3539A	♦△CRL	581-17
	SSI	
1N3540	♦△CRL	581-18
	SSI	
1N3540A	♦△CRL	581-19
	SSI	
1N3541	♦△CRL	581-20
	SSI	
1N3541A	♦△CRL	581-21
	SSI	
1N3542	♦△CRL	581-22
	SSI	
1N3542A	♦△CRL	581-23
	SSI	
1N3543	♦△CRL	581-24
	SSI	
1N3543A	♦△CRL	581-25
	SSI	
1N3544	△GESY	299-89
ITT	SOD	
1N3545	△GESY	310-58
ITT	SOD	
	UPI	
1N3546	△GESY	320-101
ITT	SOD	
	UPI	
1N3547	△GESY	329-24
ITT	SOD	
	UPI	
1N3548	GESY	339-70
IDC	ITT	
	SOD	
1N3549	△GESY	346-66
ITT	SOD	
1N3550	IDC	281-76
SDI	SSI	
	TSC	
1N3551	CODI	558-106
CRY	EAS	
	TRW	
1N3552	♦CODI	549-13
CRY	EAS	
	TRW	
1N3552A	CODI	548-34
1N3553	CODI	175-161
CRL	DIC	
GSE	IDC	
♦MSC	TNC	
	TSC	
1N3554	△TRW	543-22
CODI	CRY	
	EAS	
1N3555	△TRW	548-35
CODI	CRY	
	EAS	
1N3556	△TRW	556-74
CODI	CRY	
	EAS	
1N3557	△TRW	551-67
CODI	EAS	
1N3558	TSC	598-16
1N3559	IDC	247-44
	UPI	
1N3560	△PHIL	567-100
1N3561	△PHIL	567-101
1N3562	△PHIL	571-57
1N3563	♦△RCA	369-89
EDI	ITT	
	SCN	
1N3564	IDC	246-79
SES	UPI	
1N3565	SCN	246-20
	UPI	
1N3567	△TRW	274-64
CODI	SSI	
1N3568	△GIC	276-18
1N3569	EDI	303-29
ETC	IDC	
INRB	INRC	
INRI	INRJ	
ITT	MOTA	
SAR	SCN	
SOD	SSI	
	UPI	
1N3570	EDI	314-38
ETC	INRB	
INRC	INRI	
INRJ	ITT	
MOTA	SAR	
SCN	SOD	
SSI	UPI	
1N3571	EDI	323-65
cont next col		
1N3571		
(cont)	ETC	
INRB	INRC	
INRI	INRJ	
ITT	MOTA	
SAR	SCN	
SOD	SSI	
	UPI	
1N3572	EDI	333-31
ETC	IDC	
INRB	INRC	
INRI	INRJ	
ITT	MOTA	
SAR	SCN	
SOD	SSI	
	UPI	
1N3573	EDI	342-22
ETC	IDC	
INRB	INRC	
INRI	INRJ	
ITT	MOTA	
SAR	SCN	
SOD	SSI	
	UPI	
1N3574	EDI	350-50
ETC	IDC	
INRB	INRC	
INRI	INRJ	
ITT	MOTA	
SAR	SCN	
SOD	SSI	
1N3575	TSC	251-26
	UPI	
1N3576	TSC	255-9
1N3577	TSC	256-71
1N3578	IDC	257-99
	TSC	
1N3579	TSC	258-66
1N3580	♦△MOTA	191-133
CODI	♦DIC	
GSE	IDC	
ITT	SDI	
SSI	TNC	
	USS	
1N3580A	♦△MOTA	191-134
CODI	♦DIC	
GSE	IDC	
ITT	SDI	
SSI	TNC	
	USS	
1N3580B	♦△MOTA	191-135
CODI	♦DIC	
GSE	IDC	
ITT	SDI	
SSI	TNC	
	USS	
1N3581	♦△MOTA	191-136
CODI	♦DIC	
GSE	IDC	
ITT	SDI	
SSI	TNC	
	USS	
1N3581A	♦△MOTA	191-137
CODI	♦DIC	
GSE	IDC	
ITT	SDI	
SSI	TNC	
	USS	
1N3581B	♦△MOTA	191-138
CODI	♦DIC	
GSE	IDC	
ITT	SDI	
SSI	TNC	
	USS	
1N3582	♦△MOTA	191-139
CODI	♦DIC	
GSE	IDC	
ITT	SDI	
SSI	TNC	
	USS	
1N3582A	♦△MOTA	191-140
CODI	♦DIC	
GSE	IDC	
ITT	SDI	
SSI	TNC	
	USS	
1N3582B	♦△MOTA	191-141
CODI	♦DIC	
GSE	IDC	
ITT	SDI	
SSI	TNC	
	USS	
1N3583	♦△MOTA	191-142
CODI	♦DIC	
GSE	IDC	
ITT	SDI	
SSI	TNC	
	USS	
1N3583A	♦△MOTA	191-143
CODI	♦DIC	
GSE	IDC	
ITT	SDI	
SSI	TNC	
	USS	
1N3583B	♦△MOTA	191-144
CODI	♦DIC	
GSE	IDC	
ITT	SDI	
SSI	TNC	
	USS	
1N3584	CODI	191-145
♦DIC	GSE	
IDC	ITT	
SDI	SSI	
TNC	USS	

△-Registered with JEDEC by this manufacturer

♦-Copy of mfr's data sheet may be ordered from D.A.T.A.

1. TYPE No. CROSS INDEX

IN TYPE NUMBER SEQUENCE

TYPE No.	MFRS	Pg&Line
1N3584A	CODI	191-146
♦DIC	GSE	
IDC	ITT	
SDI	SSI	
TNC	USS	
1N3584B	CODI	191-147
♦DIC	GSE	
IDC	ITT	
SDI	SSI	
TNC	USS	
1N3585	AMD	298- 19
	SSI	
1N3586	AMD	306-109
	SSI	
1N3587	AMD	318- 63
	SSI	
1N3588	AMD	326- 92
	SSI	
1N3589	AMD	338- 3
	SSI	
1N3590	AMD	345- 22
	SSI	
1N3591	AMD	354- 58
	SSI	
1N3592	ESMF	266- 98
GELC	GIC	
IDC	ITT	
MISI	SDI	
	SSI	
1N3593	IDC	269- 42
1N3594	△GIC	273- 49
IDC	♦MSC	
1N3595	♦△FSC	256- 9
AMD	BNT	
ESMF	ETC	
HSC	IDC	
MISI	NJRC	
SDI	SGSI	
SSI	TSC	
JAN1N3595	FSC	280- 80
	RAYN	
1N3596	△FSC	265- 72
EMLS	HSC	
IDC	NJRC	
RAYN	SDI	
SGSI	SSI	
	TSC	
1N3597	△FSC	281- 32
IDC	SGSI	
SSI	TSC	
1N3598	HSC	271- 93
IDC	NJRC	
RAYN	SDI	
SSI	TSC	
1N3599	HSC	281- 3
RAYN	SDI	
	SSI	
1N3600	♦△FSC	270- 66
♦BNT	EMLS	
ESMF	♦GESY	
HSC	IDC	
ITT	MISI	
NJRC	♦NPC	
QUA	RAYN	
SDI	SGSI	
SSI	TEC	
TIID	TIIF	
	TSC	
JAN1N3600	FSC	271- 20
ITT	TEC	
	TSC	
1N3601	IDC	275- 70
QUA	TSC	
1N3602	△FSC	271- 4
IDC	QUA	
SGSI	TSC	
1N3603	△FSC	267- 66
IDC	QUA	
	TSC	
1N3604	△GESY	275- 22
BNT	CODI	
EMLS	♦ESMF	
FSC	GIC	
HSC	IDC	
INTG	ITT	
MISI	♦MULB	
NJRC	PHIC	
QUA	RAYN	
SDI	SES	
TEC	TIID	
TIIF	TSC	
1N3605	♦△GESY	269- 7
BNT	CODI	
EMLS	♦ESMF	
FSC	GIC	
HSC	IDC	
ITT	MISI	
♦QUA	RAYN	
SDI	SES	
TEC	TIID	
TIIF	TSC	
1N3606	♦△GESY	275- 23
BNT	CODI	
EMLS	♦ESMF	
FSC	GIC	
HSC	IDC	
ITT	MISI	
NJRC	♦QUA	
RAYN	SDI	
SES	TEC	
TIID	TIIF	
	TSC	
1N3607	♦△GESY	275- 24

cont next col.

TYPE No	MFRS	Pg&Line
1N3607		
(cont)	HSC	
IDC	QUA	
	SDI	
1N3608	♦△GESY	269- 8
IDC	QUA	
1N3609	♦△GESY	275- 25
1N3611	△UNI	313- 31
CRL	GIC	
♦MSC	SES	
SET	SSI	
TNC	TRW	
	UPI	
JAN1N3611	MSC	318-102
SET	UNI	
1N3612	△UNI	332- 18
CRL	GIC	
♦MSC	SES	
SET	SSI	
TNC	TRW	
	UPI	
JAN1N3612	MSC	338- 71
SET	UNI	
1N3613	△UNI	349- 39
CRL	GIC	
♦MSC	SES	
SET	SSI	
TNC	TRW	
JAN1N3613	MSC	358- 75
SET	UNI	
1N3614	△UNI	361-104
GIC	♦MSC	
SES	SET	
SSI	TNC	
	TRW	
JAN1N3614	MSC	368-107
SET	UNI	
1N3615	△INRC	296- 95
EDL	ERI	
ETC	IDC	
INRB	INRI	
INRJ	ITT	
MOTA	SAR	
SOD	SSI	
	UPI	
1N3616	△INRC	304- 78
EDI	EDL	
ERI	ETC	
IDC	INRB	
INRI	INRJ	
ITT	MOTA	
SAR	SOD	
SSI	UPI	
1N3617	△INRC	308- 30
EDI	EDL	
ERI	ETC	
IDC	INRB	
INRI	INRJ	
ITT	MOTA	
SAR	SOD	
SSI	UPI	
1N3618	△INRC	316- 2
EDI	EDL	
ERI	ETC	
IDC	INRB	
INRI	INRJ	
ITT	MOTA	
SAR	SOD	
SSI	UPI	
1N3619	△INRC	324- 90
EDI	EDL	
ERI	IDC	
INRB	INRI	
INRJ	ITT	
MOTA	SAR	
SOD	SSI	
	UPI	
1N3620	△INRC	335- 9
EDI	EDL	
ERI	ETC	
IDC	INRB	
INRI	INRJ	
ITT	MOTA	
SAR	SOD	
SSI	UPI	
1N3621	△INRC	343- 32
EDI	EDL	
ERI	ETC	
IDC	INRB	
INRI	INRJ	
ITT	MOTA	
SAR	SOD	
	SSI	
1N3622	△INRC	352- 7
EDI	EDL	
ERI	ETC	
IDC	INRB	
INRI	INRJ	
ITT	MOTA	
SAR	SOD	
	SSI	
1N3623	△INRC	364- 41
EDI	EDL	
ERI	ETC	
IDC	INRB	
INRI	INRJ	
ITT	SOD	
	SSI	
1N3624	△INRC	374- 13
EDL	ERI	
ETC	INRB	
INRI	INRJ	
ITT	SOD	
	SSI	

TYPE No.	MFRS	Pg&Line
1N3625	IDC	281- 40
	SSI	
1N3626	IDC	249-108
1N3627	CODI	549- 14
CRY	EAS	
	KSC	
1N3628	CODI	558-107
CRY	EAS	
	KSC	
1N3639	EDL	311- 27
GIC	INRB	
INRC	INRI	
INRJ	ITT	
QUA	SAR	
SCN	SYN	
	TEC	
1N3640	EDL	330- 2
GIC	INRB	
INRC	INRI	
INRJ	ITT	
QUA	SAR	
SCN	SSI	
SYN	TEC	
1N3641	EDL	347- 33
GIC	IDC	
INRB	INRC	
INRI	INRJ	
ITT	QUA	
SAR	SCN	
SSI	SYN	
	TEC	
1N3642	EDL	359- 63
GIC	INRB	
INRC	INRI	
INRJ	ITT	
QUA	SAR	
SCN	SSI	
SYN	TEC	
1N3643	△TNC	260- 76
CODI	EDI	
ITT	MSC	
QUA	SCN	
SCO	SET	
	SSI	
JAN1N3643	none	374-104
1N3644	△TNC	261- 4
CODI	EDI	
ITT	MSC	
SCN	SCO	
SET	SSI	
JAN1N3644	SET	385- 23
1N3645	△TNC	261- 23
CODI	EDI	
ITT	MSC	
SCN	SCO	
SET	SSI	
JAN1N3645	SET	390- 65
1N3646	△TNC	261- 35
CODI	EDI	
ITT	MSC	
SCN	SCO	
SET	SSI	
JAN1N3646	SET	392- 77
1N3647	△TNC	261- 46
CODI	EDI	
ITT	MSC	
SCN	SCO	
SET	SSI	
JAN1N3647	SET	394- 94
1N3649	EDI	362- 61
EDL	ETC	
IDC	INRB	
INRC	INRI	
INRJ	ITT	
MOTA	SCN	
SOD	SSI	
TIID	TIIF	
	WESY	
JAN1N3649,R	EDI	372-108
	SOD	
1N3650	EDI	372- 74
EDL	ETC	
IDC	INRB	
INRC	INRI	
INRJ	ITT	
MOTA	SCN	
SOD	SSI	
TIID	TIIF	
	WESY	
JAN1N3650,R	EDI	379- 4
	SOD	
1N3653	IDC	277- 52
ITT	SES	
TEC	TSC	
1N3654	HSC	277- 53
IDC	ITT	
SDI	TSC	
1N3655	△MIC	510- 80
	♦ALP	
1N3655A	△MIC	510- 81
	♦ALP	
JAN1N3655A,AM,AMR		
ALP	MIC	510- 82
1N3655B	♦△ALP	510- 83
	MIC	
1N3656	△UNI	310- 82
MSC	TRW	
	UPI	
1N3657	△UNI	329- 52
MSC	TRW	
	UPI	
1N3658	△UNI	346- 86
MSC	TRW	

TYPE No.	MFRS	Pg&Line
1N3659	♦△TUNL	297- 36
♦MOTA	SCN	
SSI	TEC	
1N3660	♦△TUNL	305- 32
♦MOTA	SCN	
SSI	TEC	
1N3661	♦MOTA	316- 73
SCN	SSI	
TEC	♦TUNL	
1N3662	♦△TUNL	325- 18
♦MOTA	SCN	
SSI	TEC	
1N3663	♦△TUNL	335- 76
♦MOTA	SCN	
SSI	TEC	
1N3664	♦△TUNL	343- 65
SCN	SSI	
	TEC	
1N3665	♦△TUNL	352- 65
SCN	SSI	
	TEC	
1N3666	BNT	276- 48
GELC	GIC	
IDC	ITT	
	TEC	
JAN1N3666-1	GIC	276- 49
ITT	TEC	
JAN1N3666-2	GIC	276- 50
ITT	TEC	
1N3666M1	IDC	253- 1
	ITT	
1N3666M2	IDC	253- 2
	ITT	
1N3666M	IDC	253- 3
	ITT	
1N3668	IDC	267- 91
	TSC	
1N3669	EMLS	274- 46
HSC	IDC	
SDI	TSC	
1N3670	EDI	357- 8
ETC	GESY	
IDC	INRB	
INRC	INRI	
INRJ	MOTA	
SSI	SYN	
TNC	WESY	
1N3670A	△WESY	357- 9
EDI	ETC	
♦GESY	IDC	
INRB	INRC	
INRI	INRJ	
MOTA	SSI	
SYN	TNC	
	TUNL	
1N3671	EDI	364- 2
ETC	GESY	
IDC	INRB	
INRC	INRI	
INRJ	MOTA	
SSI	SYN	
TNC	WESY	
1N3671A	△WESY	364- 3
EDI	ETC	
♦GESY	INRB	
INRC	INRI	
INRJ	MOTA	
SSI	SYN	
TNC	TUNL	
JAN1N3671A	SOD	364- 4
1N3672	EDI	367- 87
ETC	GESY	
IDC	INRB	
INRC	INRI	
INRJ	MOTA	
SSI	SYN	
TNC	WESY	
1N3672A	△WESY	367- 88
EDI	ETC	
♦GESY	INRB	
INRC	INRI	
INRJ	MOTA	
SSI	SYN	
TNC	TUNL	
1N3673	EDI	373- 93
ETC	GESY	
IDC	INRB	
INRC	INRI	
INRJ	MOTA	
SSI	SYN	
TNC	WESY	
1N3673A	△WESY	373- 94
EDI	ETC	
♦GESY	IDC	
INRB	INRC	
INRI	INRJ	
MOTA	SSI	
SYN	TNC	
	TUNL	
JAN1N3673A	SOD	373- 95
1N3675	△MOTA	177-137
APD	ASC	
CODI	♦DIC	
GSE	MSC	
PWC	SCN	
SDI	TNC	
UNI	USS	
1N3675A	△MOTA	177-138
ASC	CODI	
♦DIC	GSE	
MSC	PWC	
SDI	TNC	
UNI	USS	

TYPE No.	MFRS	Pg&Line
1N3675B	△MOTA	177-139
ASC	CODI	
♦DIC	GSE	
MSC	PWC	
SDI	TNC	
UNI	USS	
1N3676	△MOTA	180- 4
APD	ASC	
CODI	♦DIC	
GSE	IDC	
MSC	PWC	
SCN	SDI	
TNC	UNI	
	USS	
1N3676A	△MOTA	180- 5
ASC	CODI	
♦DIC	GSE	
IDC	MSC	
PWC	SDI	
TNC	UNI	
	USS	
1N3676B	△MOTA	180- 6
ASC	CODI	
♦DIC	GSE	
IDC	MSC	
PWC	SDI	
TNC	UNI	
	USS	
1N3677	△MOTA	182- 51
APD	ASC	
CODI	♦DIC	
GSE	IDC	
MSC	PWC	
SCN	SDI	
TNC	UNI	
	USS	
1N3677A	△MOTA	182- 52
ASC	CODI	
♦DIC	GSE	
IDC	MSC	
PWC	SDI	
TNC	UNI	
	USS	
1N3677B	△MOTA	182- 53
ASC	CODI	
♦DIC	GSE	
IDC	MSC	
PWC	SDI	
TNC	UNI	
	USS	
1N3678	△MOTA	185-162
APD	ASC	
CODI	♦DIC	
GSE	IDC	
MSC	PWC	
SCN	SDI	
TNC	UNI	
	USS	
1N3678A	△MOTA	185-163
ASC	CODI	
♦DIC	GSE	
IDC	MSC	
PWC	SDI	
TNC	UNI	
	USS	
1N3678B	△MOTA	185-164
ASC	♦DIC	
GSE	IDC	
MSC	PWC	
SDI	TNC	
UNI	USS	
1N3679	△MOTA	188- 55
APD	ASC	
CODI	♦DIC	
GSE	IDC	
MSC	PWC	
SCN	SDI	
TNC	UNI	
	USS	
1N3679A	△MOTA	188- 56
ASC	CODI	
♦DIC	GSE	
IDC	MSC	
PWC	SDI	
TNC	UNI	
	USS	
1N3679B	△MOTA	188- 57
ASC	CODI	
♦DIC	GSE	
IDC	MSC	
PWC	SDI	
TNC	UNI	
	USS	
1N3680	△MOTA	190- 55
APD	ASC	
CODI	♦DIC	
GSE	IDC	
ITT	MSC	
PWC	SCN	
SDI	TNC	
UNI	USS	
1N3680A	△MOTA	190- 56
ASC	CODI	
♦DIC	GSE	
IDC	ITT	
MSC	PWC	
SDI	TNC	
UNI	USS	
1N3680B	△MOTA	190- 57
ASC	CODI	
♦DIC	GSE	
IDC	ITT	
MSC	PWC	

cont.next page

△-Registered with JEDEC by this manufacturer

♦-Copy of mfr's data sheet may be ordered from D.A.T.A.

1. TYPE No. CROSS INDEX

IN TYPE NUMBER SEQUENCE

TYPE No.	MFRS	Pg&Line
1N3680B		
(cont)	SDI	
TNC	UNI	
	USS	
1N3681	△MOTA	192-123
APD	ASC	
♦DIC	GSE	
IDC	ITT	
MSC	PWC	
SCN	SDI	
TNC	UNI	
	USS	
1N3681A	△MOTA	192-124
ASC	CODI	
♦DIC	GSE	
IDC	ITT	
MSC	PWC	
SDI	TNC	
UNI	USS	
1N3681B	△MOTA	192-125
ASC	CODI	
♦DIC	GSE	
IDC	ITT	
MSC	PWC	
SDI	TNC	
UNI	USS	
1N3682	△MOTA	194-182
APD	ASC	
CODI	♦DIC	
GSE	IDC	
ITT	MSC	
PWC	SCN	
SDI	TNC	
UNI	USS	
1N3682A	△MOTA	194-183
ASC	CODI	
♦DIC	GSE	
IDC	ITT	
MSC	PWC	
SDI	TNC	
UNI	USS	
1N3682B	△MOTA	194-184
ASC	CODI	
♦DIC	GSE	
IDC	ITT	
MSC	PWC	
SDI	TNC	
UNI	USS	
1N3683	△MOTA	197-141
APD	ASC	
CODI	♦DIC	
GSE	IDC	
ITT	MSC	
PWC	SCN	
SDI	TNC	
UNI	USS	
1N3683A	△MOTA	197-142
ASC	CODI	
♦DIC	GSE	
IDC	ITT	
MSC	PWC	
SDI	TNC	
UNI	USS	
1N3683B	△MOTA	197-143
ASC	CODI	
♦DIC	GSE	
IDC	ITT	
MSC	PWC	
SDI	TNC	
UNI	USS	
1N3684	△MOTA	199-133
APD	ASC	
CODI	♦DIC	
GSE	IDC	
ITT	MSC	
PWC	SCN	
SDI	TNC	
UNI	USS	
1N3684A	△MOTA	199-134
ASC	CODI	
♦DIC	GSE	
IDC	ITT	
MSC	PWC	
SDI	TNC	
UNI	USS	
1N3684B	△MOTA	199-135
ASC	CODI	
♦DIC	GSE	
IDC	ITT	
MSC	PWC	
SDI	TNC	
UNI	USS	
1N3685	△MOTA	202-48
APD	ASC	
CODI	♦DIC	
GSE	IDC	
ITT	MSC	
PWC	SCN	
SDI	TNC	
UNI	USS	
1N3685A	△MOTA	202-49
ASC	CODI	
♦DIC	GSE	
IDC	ITT	
MSC	PWC	
SDI	TNC	
UNI	USS	
1N3685B	△MOTA	202-50
ASC	CODI	
♦DIC	GSE	
IDC	ITT	
MSC	PWC	
SDI	TNC	
UNI	USS	
1N3686	△MOTA	205-2
ASC	CODI	
♦DIC	GSE	
IDC	ITT	
MSC	PWC	
SCN	SDI	
TNC	UNI	
	USS	
1N3686A	△MOTA	205-3
ASC	CODI	
♦DIC	GSE	
IDC	ITT	
MSC	PWC	
SDI	TNC	
UNI	USS	
1N3686B	△MOTA	205-4
ASC	CODI	
♦DIC	GSE	
IDC	ITT	
MSC	PWC	
SDI	TNC	
UNI	USS	
1N3687	△MOTA	206-161
APD	ASC	
CODI	♦DIC	
GSE	ITT	
MSC	PWC	
SCN	SDI	
TNC	UNI	
	USS	
1N3687A	△MOTA	206-162
ASC	CODI	
♦DIC	GSE	
ITT	MSC	
PWC	SDI	
TNC	UNI	
	USS	
1N3687B	△MOTA	206-163
ASC	CODI	
♦DIC	GSE	
ITT	MSC	
PWC	SDI	
TNC	UNI	
	USS	
1N3688	△MOTA	208-151
APD	ASC	
CODI	♦DIC	
GSE	ITT	
MSC	PWC	
SCN	SDI	
TNC	UNI	
	USS	
1N3688A	△MOTA	208-152
ASC	CODI	
♦DIC	GSE	
ITT	MSC	
PWC	SDI	
TNC	UNI	
	USS	
1N3688B	△MOTA	208-153
ASC	CODI	
♦DIC	GSE	
ITT	MSC	
PWC	SDI	
TNC	USS	
1N3689	△MOTA	211-43
APD	ASC	
CODI	♦DIC	
GSE	IDC	
ITT	MSC	
PWC	SCN	
SDI	TNC	
UNI	USS	
1N3689A	△MOTA	211-44
ASC	CODI	
♦DIC	GSE	
IDC	ITT	
MSC	PWC	
SDI	TNC	
UNI	USS	
1N3689B	△MOTA	211-45
ASC	CODI	
♦DIC	GSE	
IDC	ITT	
MSC	PWC	
SDI	TNC	
UNI	USS	
1N3690	△MOTA	213-51
APD	ASC	
CODI	♦DIC	
GSE	ITT	
MSC	PWC	
SCN	SDI	
TNC	UNI	
	USS	
1N3690A	△MOTA	213-52
ASC	CODI	
♦DIC	GSE	
ITT	MSC	
PWC	SDI	
TNC	UNI	
	USS	
1N3690B	△MOTA	213-53
ASC	CODI	
♦DIC	GSE	
ITT	MSC	
PWC	SDI	
TNC	UNI	
	USS	
1N3691	△MOTA	215-15
APD	ASC	
♦DIC	GSE	
IDC	ITT	

cont next col

TYPE No.	MFRS	Pg&Line
1N3691		
(cont)	MSC	
PWC	SCN	
SDI	TNC	
UNI	USS	
1N3691A	△MOTA	215-16
ASC	♦DIC	
GSE	IDC	
ITT	MSC	
PWC	SDI	
TNC	UNI	
	USS	
1N3691B	△MOTA	215-17
ASC	♦DIC	
GSE	IDC	
ITT	MSC	
PWC	SDI	
TNC	UNI	
	USS	
1N3692	△MOTA	216-128
ASC	♦DIC	
GSE	IDC	
ITT	MSC	
PWC	SCN	
SDI	TNC	
UNI	USS	
1N3692A	△MOTA	216-129
ASC	♦DIC	
GSE	IDC	
ITT	MSC	
PWC	SDI	
TNC	UNI	
	USS	
1N3692B	△MOTA	216-130
ASC	♦DIC	
GSE	IDC	
ITT	MSC	
PWC	SDI	
TNC	UNI	
	USS	
1N3693	△MOTA	218-25
ASC	♦DIC	
GSE	IDC	
ITT	MSC	
PWC	SCN	
SDI	TNC	
UNI	USS	
1N3693A	△MOTA	218-26
ASC	♦DIC	
GSE	IDC	
ITT	MSC	
PWC	SDI	
TNC	UNI	
	USS	
1N3693B	△MOTA	218-27
ASC	♦DIC	
GSE	IDC	
ITT	MSC	
PWC	SDI	
TNC	UNI	
	USS	
1N3694	△MOTA	219-106
ASC	♦DIC	
GSE	IDC	
ITT	MSC	
PWC	SCN	
SDI	TNC	
UNI	USS	
1N3694A	△MOTA	219-107
ASC	♦DIC	
GSE	IDC	
ITT	MSC	
PWC	SDI	
TNC	UNI	
	USS	
1N3694B	△MOTA	219-108
ASC	♦DIC	
GSE	IDC	
ITT	MSC	
PWC	SDI	
TNC	UNI	
	USS	
1N3695	△MOTA	221-40
ASC	♦DIC	
GSE	ITT	
MSC	PWC	
SCN	SDI	
TNC	UNI	
	USS	
1N3695A	△MOTA	221-41
ASC	♦DIC	
GSE	ITT	
MSC	PWC	
SDI	TNC	
UNI	USS	
1N3695B	△MOTA	221-42
ASC	♦DIC	
GSE	ITT	
MSC	PWC	
SDI	TNC	
UNI	USS	
1N3696	△MOTA	222-178
ASC	♦DIC	
GSE	IDC	
ITT	MSC	
PWC	SCN	
SDI	TNC	
UNI	USS	
1N3696A	△MOTA	222-179
ASC	♦DIC	
GSE	IDC	
ITT	MSC	
PWC	SDI	

cont.next col

TYPE No.	MFRS	Pg&Line
1N3696A		
(cont)	TNC	
UNI	USS	
1N3696B	△MOTA	222-180
ASC	♦DIC	
GSE	IDC	
ITT	MSC	
PWC	SDI	
TNC	UNI	
	USS	
1N3697	△MOTA	224-71
ASC	♦DIC	
GSE	IDC	
MSC	PWC	
SCN	SDI	
TNC	UNI	
	USS	
1N3697A	△MOTA	224-72
ASC	♦DIC	
GSE	IDC	
MSC	PWC	
SDI	TNC	
UNI	USS	
1N3697B	△MOTA	224-73
ASC	♦DIC	
GSE	IDC	
MSC	PWC	
SDI	TNC	
UNI	USS	
1N3698	△MOTA	226-26
ASC	♦DIC	
GSE	IDC	
MSC	PWC	
SCN	SDI	
TNC	UNI	
	USS	
1N3698A	△MOTA	226-27
ASC	♦DIC	
GSE	IDC	
MSC	PWC	
SDI	TNC	
UNI	USS	
1N3698B	△MOTA	226-28
ASC	♦DIC	
GSE	IDC	
MSC	PWC	
SDI	TNC	
UNI	USS	
1N3699	△MOTA	227-79
ASC	♦DIC	
GSE	IDC	
MSC	PWC	
SCN	SDI	
TNC	UNI	
	USS	
1N3699A	△MOTA	227-80
ASC	♦DIC	
GSE	IDC	
MSC	PWC	
SDI	TNC	
UNI	USS	
1N3699B	△MOTA	227-81
ASC	♦DIC	
GSE	IDC	
MSC	PWC	
SDI	TNC	
UNI	USS	
1N3700	△MOTA	228-177
ASC	♦DIC	
GSE	IDC	
MSC	PWC	
SCN	SDI	
TNC	UNI	
	USS	
1N3700A	△MOTA	228-178
ASC	♦DIC	
GSE	IDC	
MSC	PWC	
SDI	TNC	
UNI	USS	
1N3700B	△MOTA	228-179
ASC	♦DIC	
GSE	IDC	
MSC	PWC	
SDI	TNC	
UNI	USS	
1N3701	△MOTA	230-76
ASC	♦DIC	
GSE	IDC	
MSC	PWC	
SCN	SDI	
TNC	UNI	
	USS	
1N3701A	△MOTA	230-77
ASC	♦DIC	
GSE	IDC	
MSC	PWC	
SDI	TNC	
UNI	USS	
1N3701B	△MOTA	230-78
ASC	♦DIC	
GSE	IDC	
MSC	PWC	
SDI	TNC	
UNI	USS	
1N3702	△MOTA	232-19
ASC	♦DIC	
GSE	IDC	
MSC	PWC	
SCN	SDI	
TNC	UNI	
	USS	
1N3702A	△MOTA	232-20

cont next col.

TYPE No.	MFRS	Pg&Line
1N3702A		
(cont.)	ASC	
♦DIC	GSE	
IDC	MSC	
PWC	SDI	
TNC	UNI	
	USS	
1N3702B	△MOTA	232-21
ASC	♦DIC	
GSE	IDC	
MSC	PWC	
SDI	TNC	
UNI	USS	
1N3703	△MOTA	233-54
ASC	♦DIC	
GSE	IDC	
MSC	PWC	
SCN	SDI	
TNC	UNI	
	USS	
1N3703A	△MOTA	233-55
ASC	♦DIC	
GSE	IDC	
MSC	PWC	
SDI	TNC	
UNI	USS	
1N3703B	△MOTA	233-56
ASC	♦DIC	
GSE	IDC	
MSC	PWC	
SDI	TNC	
UNI	USS	
1N3704	ASC	235-27
♦DIC	GSE	
IDC	MSC	
PWC	SCN	
SDI	UNI	
	USS	
1N3704A	ASC	235-28
♦DIC	GSE	
IDC	MSC	
PWC	SDI	
UNI	USS	
1N3704B	ASC	235-29
♦DIC	GSE	
IDC	MSC	
PWC	SDI	
UNI	USS	
1N3705	ASC	236-50
♦DIC	GSE	
IDC	MSC	
PWC	SCN	
SDI	UNI	
	USS	
1N3705A	ASC	236-51
♦DIC	GSE	
IDC	MSC	
PWC	SDI	
UNI	USS	
1N3705B	ASC	236-52
♦DIC	GSE	
IDC	MSC	
PWC	SDI	
UNI	USS	
1N3706	ASC	237-90
♦DIC	GSE	
IDC	MSC	
PWC	SCN	
SDI	UNI	
	USS	
1N3706A	ASC	237-91
♦DIC	GSE	
IDC	MSC	
PWC	SDI	
UNI	USS	
1N3706B	ASC	237-92
♦DIC	GSE	
IDC	MSC	
PWC	SDI	
UNI	USS	
1N3707	ASC	239-63
♦DIC	GSE	
IDC	MSC	
PWC	SCN	
SDI	UNI	
	USS	
1N3707A	ASC	239-64
♦DIC	GSE	
IDC	MSC	
PWC	SDI	
UNI	USS	
1N3707B	ASC	239-65
♦DIC	GSE	
IDC	MSC	
PWC	SDI	
UNI	USS	
1N3708	ASC	240-95
♦DIC	GSE	
IDC	MSC	
PWC	SCN	
SDI	UNI	
	USS	
1N3708A	ASC	240-96
♦DIC	GSE	
IDC	MSC	
PWC	SDI	
UNI	USS	
1N3708B	ASC	240-97
♦DIC	GSE	
IDC	MSC	
PWC	SDI	
UNI	USS	
1N3709	ASC	242-31

cont next page

△-Registered with JEDEC by this manufacturer

♦-Copy of mfr's data sheet may be ordered from D.A.T.A.

1. TYPE No. CROSS INDEX

IN TYPE NUMBER SEQUENCE

TYPE No.	MFRS	Pg&Line
1N3709		
(cont)	♦DIC	
	GSE	
	MSC	
	PWC	
	SCN	
	SDI	
	UNI	
	USS	
1N3709A	ASC	242 - 32
	♦DIC	
	GSE	
	MSC	
	PWC	
	SDI	
	UNI	
	USS	
1N3709B	ASC	242 - 33
	♦DIC	
	GSE	
	MSC	
	PWC	
	SDI	
	UNI	
	USS	
1N3710	ASC	243 - 73
	♦DIC	
	GSE	
	MSC	
	PWC	
	SCN	
	SDI	
	UNI	
	USS	
1N3710A	ASC	243 - 74
	♦DIC	
	GSE	
	MSC	
	PWC	
	SDI	
	UNI	
	USS	
1N3710B	ASC	243 - 75
	♦DIC	
	GSE	
	MSC	
	PWC	
	SDI	
	UNI	
	USS	
1N3711	EDI	400-108
	SCO	
	SOD	
1N3712	△GESY	567 - 95
	KMC	
	SSI	
1N3713	△GESY	567 - 83
	KMC	
	SSI	
JAN1N3713	GESY	567 - 84
1N3714	△GESY	569 - 72
	SSI	
1N3715	△GESY	569 - 69
	SSI	
JAN1N3715	GESY	569 - 70
1N3716	△GESY	570-108
	KMC	
	SSI	
1N3717	△GESY	570-103
	KMC	
	SSI	
JAN1N3717	GESY	570-104
1N3718	△GESY	572 - 27
	SSI	
1N3719	△GESY	572 - 24
	SSI	
JAN1N3719	GESY	572 - 25
1N3720	△GESY	572 - 94
	SSI	
1N3721	△GESY	572 - 92
	SSI	
JAN1N3721	GESY	572 - 93
1N3722	△GIC	271 - 54
	IDC	
	♦MSC	
1N3723	SOD	370 - 51
1N3724	SOD	377-109
1N3725	SOD	382 - 11
1N3726	SOD	386 - 13
1N3727	SOD	388 - 15
1N3728	△RAYN	259 - 67
	NJRC	
	SSI	
1N3729	△RAYN	287 - 30
	IDC	
	SSI	
1N3730	△RAYN	273 - 60
	HSC	
	IDC	
	NJRC	
	SDI	
	SSI	
1N3731	IDC	277 - 13
	ITT	
	SDI	
	SES	
	TEC	
	TSC	
1N3732	IDC	171-194
	MSC	
1N3733	△MIC	510 - 84
1N3734	△FSC	575 - 25
1N3735	EDL	306 - 69
	ETC	
	INRB	
	INRC	
	INRI	
	INRJ	
	SAR	
	SES	
	SSI	
	SYN	
	TNC	
	WESY	
1N3736	△GESY	318 - 20
	EDL	
	ETC	
	INRB	
	INRC	
	INRI	
	INRJ	
	SAR	
	SES	
	SSI	
	SYN	
	TNC	
	WESY	
1N3737	△GESY	326 - 54
	ETC	
	INRB	
	INRC	
	INRI	
	INRJ	
	SAR	
	SES	
	SSI	
	SYN	
	TNC	
	WESY	
1N3738	△GESY	337 - 62
	EDL	
	ETC	
	INRB	
	INRC	
	INRI	
	INRJ	
	SAR	
	SES	
	SSI	
	SYN	
	TNC	
	WESY	
1N3739	△GESY	344 - 91
	EDL	
	INRB	
	INRC	
	INRI	
	INRJ	
	SAR	
cont next col		

TYPE No.	MFRS	Pg&Line
1N3739		
(cont.)	SES	
	SSI	
	SYN	
	TNC	
	WESY	
1N3740	△GESY	354 - 13
	EDL	
	INRB	
	INRC	
	INRI	
	INRJ	
	SAR	
	SES	
	SSI	
	SYN	
	TNC	
	WESY	
1N3741	△GESY	366 - 17
	EDL	
	INRB	
	INRC	
	INRI	
	INRJ	
	SES	
	SSI	
	SYN	
	TNC	
	WESY	
1N3742	△GESY	375 - 59
	EDL	
	INRB	
	INRC	
	INRI	
	INRJ	
	SES	
	SSI	
	SYN	
	TNC	
	WESY	
1N3743	INRB	380 - 57
	INRC	
	INRI	
	INRJ	
	SES	
	SSI	
	TNC	
1N3744	INRB	383 - 19
	INRC	
	INRI	
	INRJ	
	SES	
	SSI	
	TNC	
1N3745	♦△ALP	512 - 54
	MIC	
1N3746	♦△ALP	512 - 55
1N3747	♦△ALP	512 - 56
	MIC	
JAN1N3747W,WM,WMR		
	ALP	
	MIC	512 - 57
1N3748	△DII	310 - 41
	EDL	
	ETC	
	UPI	
1N3749	△DII	329 - 1
	EDL	
	ETC	
	UPI	
1N3750	△DII	346 - 51
	EDL	
	ETC	
1N3751	△DII	359 - 64
	EDL	
	ETC	
1N3752	△DII	370 - 6
	EDL	
	ETC	
1N3753	GELC	250 - 82
	GESY	
	GIC	
	IDC	
	ITT	
	UPI	
1N3754	IDC	298-102
	♦RCA	
1N3755	♦△RCA	309 - 66
	IDC	
1N3756	♦△RCA	328 - 21
1N3757	△DII	312 - 9
	EDL	
	ETC	
	IDC	
	UPI	
1N3758	△DII	330-100
	EDL	
	ETC	
	UPI	
1N3759	△DII	348 - 18
	EDL	
	ETC	
1N3760	△DII	360-110
	EDL	
	IDC	
1N3761	△DII	371 - 35
	EDL	
	ETC	
1N3762	DIC	402 - 93
1N3763	CODI	205 - 78
	CRL	
	DIC	
	GSE	
	IDC	
	MSC	
	TSC	
1N3764	△UNI	394 - 40
	TRW	
1N3765	△WESY	357 - 54
	EDL	
	♦GESY	
	IDC	
	INRB	
	INRC	
	INRI	
	INRJ	
	SOD	
	SSI	
	SYN	
	TUNL	
1N3766	△WESY	364 - 90
	EDL	
	♦GESY	
	IDC	
	INRB	
	INRC	
	INRI	
	INRJ	
	SOD	
	SSI	
	SYN	
	TUNL	
JAN1N3766,R	none	369 - 4
1N3767	△WESY	368 - 1
	EDL	
	♦GESY	
	IDC	
	INRB	
	INRC	
	INRI	
	INRJ	
	SOD	
	SSI	
	SYN	
	TUNL	
1N3768	△WESY	374 - 52
	EDL	
	♦GESY	
	IDC	
	INRB	
	INRC	
	INRI	
	INRJ	
	SOD	
	SSI	
	SYN	
	TUNL	
JAN1N3768,R	none	379 - 82
1N3769	GELC	253 - 40
	GESY	
	GIC	
	IDC	
	ITT	
1N3770	△MIC	530 - 63
1N3771	ITT	496 - 15
1N3772	ITT	496 - 16

TYPE No.	MFRS	Pg&Line
1N3773	GELC	266 - 94
	GIC	
	IDC	
	ITT	
	SSI	
1N3774	IDC	165 - 48
1N3775	EDI	384-102
	SCN	
	SSI	
1N3777	IDC	364 - 91
	MIC	
	SSI	
1N3778	△MIC	517 - 81
	♦ALP	
1N3779	CODI	176-131
	CRL	
	DIC	
	GSE	
	IDC	
	INRB	
	INRC	
	INRI	
	INRJ	
	KSC	♦MSC
	SSI	
	TSC	
	♦USS	
1N3780	CODI	176-132
	CRL	
	DIC	
	GSE	
	IDC	
	INRB	
	INRC	
	INRI	
	INRJ	
	KSC	♦MSC
	SSI	
	TSC	
	♦USS	
1N3781	CODI	176-133
	CRL	
	DIC	
	GSE	
	IDC	
	INRB	
	INRC	
	INRI	
	INRJ	
	KSC	♦MSC
	SSI	
	TSC	
	♦USS	
1N3782	CODI	176-134
	CRL	
	DIC	
	GSE	
	IDC	
	INRB	
	INRC	
	INRI	
	INRJ	
	KSC	♦MSC
	SSI	
	TSC	
	♦USS	
1N3783	CODI	176-135
	CRL	
	DIC	
	GSE	
	IDC	
	INRB	
	INRC	
	INRI	
	INRJ	
	KSC	♦MSC
	SSI	
	TSC	
	♦USS	
1N3784	CODI	176-136
	CRL	
	DIC	
	GSE	
	IDC	
	INRB	
	INRC	
	INRI	
	INRJ	
	KSC	♦MSC
	SSI	
	TSC	
	♦USS	
1N3785	△MOTA	178 - 43
	APD	
	DIC	
	ETC	
	GSE	
	IDC	
	MSC	
	SDI	
	SSI	
1N3785A	△MOTA	178 - 44
	APD	
	DIC	
	ETC	
	GSE	
	IDC	
	MSC	
	SDI	
	SSI	
1N3785B	△MOTA	178 - 45
	APD	
	DIC	
	ETC	
	GSE	
	IDC	
	MSC	
	SDI	
	SSI	
1N3786	△MOTA	180 - 84
	APD	
	DIC	
	ETC	
	GSE	
	IDC	
	MSC	
	SDI	
	SSI	
1N3786A	△MOTA	180 - 85
	APD	
	DIC	
	ETC	
	GSE	
	IDC	
	MSC	
	SDI	
	SSI	
1N3786B	△MOTA	180 - 86
	APD	
	DIC	
	ETC	
	GSE	
	IDC	
	MSC	
	SDI	
	SSI	
1N3787	△MOTA	182-137
	APD	
	DIC	
	ETC	
	GSE	
	IDC	
	MSC	
	SDI	
	SSI	
1N3787A	△MOTA	182-138
	APD	
	DIC	
	ETC	
	GSE	
	IDC	
	MSC	
	SDI	
	SSI	
1N3787B	△MOTA	182-139
	APD	
	DIC	
	ETC	
	GSE	
	IDC	
	MSC	
	SDI	
	SSI	
1N3788	△MOTA	186 - 66
	APD	
	DIC	
	ETC	
	GSE	
	IDC	
	MSC	
	SDI	
	SSI	
1N3788A	△MOTA	186 - 67
	APD	
	DIC	
	ETC	
	GSE	
	IDC	
	MSC	
	SDI	
	SSI	

TYPE No.	MFRS	Pg&Line
1N3788B	△MOTA	186 - 68
	APD	
	DIC	
	ETC	
	GSE	
	IDC	
	MSC	
	SDI	
	SSI	
1N3789	△MOTA	188-153
	APD	
	DIC	
	ETC	
	GSE	
	IDC	
	MSC	
	SDI	
	SSI	
1N3789A	△MOTA	188-154
	APD	
	DIC	
	ETC	
	GSE	
	IDC	
	MSC	
	SDI	
	SSI	
1N3789B	△MOTA	188-155
	APD	
	DIC	
	ETC	
	GSE	
	IDC	
	MSC	
	SDI	
	SSI	
1N3790	△MOTA	190-137
	APD	
	DIC	
	ETC	
	GSE	
	IDC	
	MSC	
	SDI	
	SSI	
1N3790A	△MOTA	190-138
	APD	
	DIC	
	ETC	
	GSE	
	IDC	
	MSC	
	SDI	
	SSI	
1N3790B	△MOTA	190-139
	APD	
	DIC	
	ETC	
	GSE	
	IDC	
	MSC	
	SDI	
	SSI	
1N3791	△MOTA	193 - 46
	APD	
	DIC	
	ETC	
	GSE	
	IDC	
	MSC	
	SDI	
	SSI	
1N3791A	△MOTA	193 - 47
	APD	
	DIC	
	ETC	
	GSE	
	IDC	
	MSC	
	SDI	
	SSI	
1N3791B	△MOTA	193 - 48
	APD	
	DIC	
	ETC	
	GSE	
	IDC	
	MSC	
	SDI	
	SSI	
1N3792	APD	195 - 76
	DIC	
	ETC	
	GSE	
	IDC	
	MOTA	
	MSC	
	SDI	
	SSI	
1N3792A	APD	195 - 77
	DIC	
	ETC	
	GSE	
	IDC	
	MOTA	
	MSC	
	SDI	
	SSI	
1N3792B	APD	195 - 78
	DIC	
	ETC	
	GSE	
	IDC	
	MOTA	
	MSC	
	SDI	
	SSI	
1N3793	APD	198 - 49
	DIC	
	ETC	
	GSE	
	IDC	
	MOTA	
	MSC	
	SDI	
	SSI	
1N3793A	APD	198 - 50
	DIC	
	ETC	
	GSE	
	IDC	
	MOTA	
	MSC	
	SDI	
	SSI	
1N3793B	APD	198 - 51
	DIC	
	ETC	
	GSE	
	IDC	
	MOTA	
	MSC	
	SDI	
	SSI	
1N3794	APD	200 - 25
	DIC	
	ETC	
	GSE	
	IDC	
	MOTA	
	MSC	
	SDI	
	SSI	
1N3794A	APD	200 - 26
	DIC	
	ETC	
	GSE	
	IDC	
	MOTA	
	MSC	
	SDI	
	SSI	
1N3794B	APD	200 - 27
	DIC	
	ETC	
	GSE	
	IDC	
	MOTA	
	MSC	
	SDI	
	SSI	
1N3795	APD	202-141
	DIC	
	ETC	
	GSE	
	IDC	
	MOTA	
	MSC	
	SDI	
	SSI	
1N3795A	APD	202-142
	DIC	
	ETC	
	GSE	
	IDC	
	MOTA	
	MSC	
	SDI	
	SSI	
1N3795B	APD	202-143
	DIC	
	ETC	
	GSE	
	IDC	
	MOTA	
	MSC	
	SDI	
	SSI	
1N3796	APD	205 - 79
	DIC	
	ETC	
	GSE	
	IDC	
cont next col		

TYPE No.	MFRS	Pg&Line
1N3796		
(cont.)	MOTA	
	MSC	
	SDI	
	SSI	
1N3796A	APD	205 - 80
	DIC	
	ETC	
	GSE	
	IDC	
	MOTA	
	MSC	
	SDI	
	SSI	
1N3796B	APD	205 - 81
	DIC	
	ETC	
	GSE	
	IDC	
	MOTA	
	MSC	
	SDI	
	SSI	
1N3797	APD	207 - 65
	DIC	
	ETC	
	GSE	
	IDC	
	MOTA	
	MSC	
	SDI	
	SSI	
1N3797A	APD	207 - 66
	DIC	
	ETC	
	GSE	
	IDC	
	MOTA	
	MSC	
	SDI	
	SSI	
1N3797B	APD	207 - 67
	DIC	
	ETC	
	GSE	
	IDC	
	MOTA	
	MSC	
	SDI	
	SSI	
1N3798	APD	209 - 43
	DIC	
	ETC	
	GSE	
	IDC	
	MOTA	
	MSC	
	SDI	
	SSI	
1N3798A	APD	209 - 44
	DIC	
	ETC	
	GSE	
	IDC	
	MOTA	
	MSC	
	SDI	
	SSI	
1N3798B	APD	209 - 45
	DIC	
	ETC	
	GSE	
	IDC	
	MOTA	
	MSC	
	SDI	
	SSI	
1N3799	APD	211-129
	DIC	
	ETC	
	GSE	
	IDC	
	MOTA	
	MSC	
	SDI	
	SSI	
1N3799A	APD	211-130
	DIC	
	ETC	
	GSE	
	IDC	
	MOTA	
	MSC	
	SDI	
	SSI	
1N3799B	APD	211-131
	DIC	
	ETC	
	GSE	
	IDC	
	MOTA	
	MSC	
	SDI	
	SSI	
1N3800	APD	213-124
	DIC	
	ETC	
	GSE	
	IDC	
	MOTA	
	MSC	
	SDI	
	SSI	
1N3800A	APD	213-125
	DIC	
	ETC	
	GSE	
	IDC	
	MOTA	
	MSC	
	SDI	
	SSI	
1N3800B	APD	213-126
	DIC	
	ETC	
	GSE	
	IDC	
	MOTA	
	MSC	
	SDI	
	SSI	
1N3801	APD	215 - 93
	DIC	
	ETC	
	GSE	
	IDC	
	MOTA	
	MSC	
	SDI	
	SSI	
1N3801A	APD	215 - 94
	DIC	
	ETC	
	GSE	
	IDC	
	MOTA	
	MSC	
	SDI	
	SSI	
1N3801B	APD	215 - 95
	DIC	
	ETC	
	GSE	
	IDC	
	MOTA	
	MSC	
	SDI	
	SSI	
1N3802,A,B	♦△MOTA	217 - 4
	♦DIC	
	ETC	
	GSE	
	IDC	
	MSC	
	SDI	
	SSI	
1N3803,A,B	△MOTA	218 - 86
	♦DIC	
	ETC	
	GSE	
	IDC	
	MSC	
	SDI	
	SSI	
1N3804,A,B	♦△MOTA	219-160
	♦DIC	
	ETC	
	GSE	
	IDC	
	MSC	
	SDI	
	SSI	
1N3805,A,B	♦△MOTA	221-104
	♦DIC	
	ETC	
	GSE	
	IDC	
	MSC	
	SDI	
	SSI	
1N3806,A,B	♦△MOTA	223 - 49
	♦DIC	
	ETC	
	GSE	
	IDC	
	MSC	
	SDI	
	SSI	

△-Registered with JEDEC by this manufacturer

♦-Copy of mfr's data sheet may be ordered from D.A.T.A.

1. TYPE No. CROSS INDEX

IN TYPE NUMBER SEQUENCE

TYPE No.	MFRS	Pg&Line
1N3807,A,B	♦△MOTA	224-136
♦DIC	ETC	
GSE	IDC	
MSC	SDI	
	SSI	
1N3808,A,B	♦△MOTA	226- 80
♦DIC	ETC	
GSE	IDC	
MSC	SDI	
	SSI	
1N3809,A,B	♦△MOTA	227-141
♦DIC	ETC	
GSE	IDC	
MSC	SDI	
	SSI	
1N3810,A,B	♦△MOTA	229- 54
♦DIC	ETC	
GSE	IDC	
MSC	SDI	
	SSI	
1N3811,A,B	♦△MOTA	230-135
♦DIC	ETC	
GSE	IDC	
MSC	SDI	
	SSI	
1N3812,A,B	♦△MOTA	232- 68
♦DIC	ETC	
GSE	IDC	
MSC	SDI	
	SSI	
1N3813,A,B	♦△MOTA	233-117
♦DIC	ETC	
GSE	IDC	
MSC	SDI	
	SSI	
1N3814,A,B	♦△MOTA	235- 78
♦DIC	ETC	
GSE	IDC	
MSC	SDI	
	SSI	
1N3815,A,B	♦DIC	236-105
ETC	GSE	
IDC	♦MOTA	
MSC	SDI	
	SSI	
1N3816,A,B	♦△MOTA	237-139
♦DIC	ETC	
GSE	IDC	
MSC	SDI	
	SSI	
1N3817,A,B	♦△MOTA	239-121
♦DIC	ETC	
GSE	IDC	
MSC	SDI	
	SSI	
1N3818,A,B	♦△MOTA	240-139
♦DIC	ETC	
GSE	IDC	
MSC	SDI	
	SSI	
1N3819,A,B	♦△MOTA	242- 84
♦DIC	ETC	
GSE	IDC	
MSC	SDI	
	SSI	
1N3820,A,B	♦△MOTA	243-120
♦DIC	ETC	
GSE	IDC	
MSC	SDI	
	SSI	
1N3821	ASC	167- 44
CODI	♦DIC	
ESMF	ETC	
♦GSE	IDC	
INRB	INRC	
INRI	INRJ	
ITT	MISI	
SES	SSI	
TNC	TRW	
	USS	
1N3821A	ASC	167- 45
CODI	♦DIC	
♦ESMF	ETC	
♦GSE	IDC	
INRB	INRC	
INRI	INRJ	
ITT	MISI	
SES	SSI	
TNC	TRW	
	USS	
JAN1N3821A	CODI	167- 46
DIC	INRC	
MOTA	USS	
1N3822	ASC	168- 2
CODI	♦DIC	
ESMF	ETC	
♦GSE	IDC	
INRB	INRC	
INRI	INRJ	
ITT	MISI	
SES	SSI	
TNC	TRW	
	USS	
1N3822A	ASC	168- 3
CODI	♦DIC	
♦ESMF	ETC	
♦GSE	IDC	
INRB	INRC	
INRI	INRJ	
ITT	MISI	
SES	SSI	
TNC	TRW	
	USS	

TYPE No.	MFRS	Pg&Line
JAN1N3822A	CODI	168- 4
DIC	INRC	
MOTA	USS	
1N3823	ASC	168-152
CODI	♦DIC	
ESMF	ETC	
♦GSE	IDC	
INRB	INRC	
INRI	INRJ	
ITT	MISI	
SES	SSI	
TNC	TRW	
	USS	
1N3823A	ASC	168-153
CODI	♦DIC	
♦ESMF	ETC	
♦GSE	IDC	
INRB	INRC	
INRI	INRJ	
ITT	MISI	
SES	SSI	
TNC	TRW	
	USS	
JAN1N3823A	CODI	168-154
DIC	INRC	
MOTA	USS	
1N3824	ASC	169-148
CODI	♦DIC	
ESMF	ETC	
♦GSE	IDC	
INRB	INRC	
INRI	INRJ	
ITT	MISI	
SES	SSI	
TNC	TRW	
	USS	
1N3824A	ASC	169-149
CODI	♦DIC	
♦ESMF	ETC	
♦GSE	IDC	
INRB	INRC	
INRI	INRJ	
ITT	MISI	
SES	SSI	
TNC	TRW	
	USS	
JAN1N3824A	CODI	169-150
DIC	INRC	
MOTA	USS	
1N3825	ASC	170-156
CODI	♦DIC	
ESMF	ETC	
♦GSE	IDC	
INRB	INRC	
INRI	INRJ	
ITT	MISI	
SES	SSI	
TNC	TRW	
	USS	
1N3825A	ASC	170-157
CODI	♦DIC	
♦ESMF	ETC	
♦GSE	IDC	
INRB	INRC	
INRI	INRJ	
ITT	MISI	
SES	SSI	
TNC	TRW	
	USS	
JAN1N3825A	CODI	170-158
DIC	INRC	
MOTA	USS	
1N3826	ASC	171-195
CODI	♦DIC	
ESMF	ETC	
♦GSE	IDC	
INRB	INRC	
INRI	INRJ	
ITT	MISI	
SES	SSI	
TNC	TRW	
	USS	
1N3826A	ASC	171-196
CODI	♦DIC	
♦ESMF	ETC	
♦GSE	IDC	
INRB	INRC	
INRI	INRJ	
ITT	MISI	
SES	SSI	
TNC	TRW	
	USS	
JAN1N3826A	CODI	172- 1
DIC	INRC	
MOTA	USS	
1N3827	ASC	173- 66
CODI	♦DIC	
ESMF	ETC	
♦GSE	IDC	
INRB	INRC	
INRI	INRJ	
ITT	MISI	
SES	TNC	
TRW	USS	
1N3827A	ASC	173- 67
CODI	♦DIC	
♦ESMF	ETC	
♦GSE	IDC	
INRB	INRC	
INRI	INRJ	
ITT	MISI	
SES	SSI	
TNC	TRW	
	USS	

TYPE No.	MFRS	Pg&Line
JAN1N3827A	CODI	173- 68
DIC	INRC	
MOTA	USS	
1N3828	ASC	175- 40
CODI	♦DIC	
ESMF	ETC	
♦GSE	IDC	
INRB	INRC	
INRI	INRJ	
ITT	MISI	
SES	SSI	
TNC	TRW	
	USS	
1N3828A	ASC	175- 41
CODI	♦DIC	
♦ESMF	ETC	
♦GSE	IDC	
INRB	INRC	
INRI	INRJ	
ITT	MISI	
SES	SSI	
TNC	TRW	
	USS	
JAN1N3828A	CODI	175- 42
DIC	INRC	
MOTA	USS	
1N3829,A	♦ASC	177-151
CODI	♦DIC	
ETC	GSE	
IDC	INRB	
INRC	INRI	
INRJ	ITT	
MSC	SAR	
SES	SSI	
♦TNC	TRW	
	USS	
1N3830,A	♦ASC	180- 19
CODI	♦DIC	
ETC	GSE	
IDC	INRB	
INRC	INRI	
INRJ	ITT	
MSC	SAR	
SES	SSI	
♦TNC	TRW	
	USS	
1N3831	APD	496- 34
ITT	♦SES	
	WSI	
1N3832	APD	496- 40
ITT	♦SES	
	WSI	
1N3833	APD	496- 53
ITT	♦SES	
	WSI	
1N3834	APD	496- 60
ITT	♦SES	
	WSI	
1N3835	APD	496- 69
ITT	♦SES	
	WSI	
1N3836	APD	496- 74
ITT	♦SES	
	WSI	
1N3837	APD	496- 83
ITT	♦SES	
	WSI	
1N3838	APD	496-100
ITT	♦SES	
	WSI	
1N3839	APD	496- 35
ITT	♦SES	
	WSI	
1N3840	APD	496- 41
ITT	♦SES	
	WSI	
1N3841	APD	496- 54
ITT	♦SES	
	WSI	
1N3842	APD	496- 61
ITT	♦SES	
	WSI	
1N3843	APD	496- 70
ITT	♦SES	
	WSI	
1N3844	APD	496- 75
ITT	♦SES	
	WSI	
1N3845	APD	496- 84
ITT	♦SES	
	WSI	
1N3846	APD	496-101
ITT	♦SES	
	WSI	
1N3847	KMC	571- 55
1N3848	KMC	572- 18
1N3849	KMC	572- 80
1N3850	KMC	573- 22
1N3851	KMC	573- 52
1N3852	KMC	571- 49
1N3853	KMC	572- 12
1N3854	KMC	572- 59
1N3857	KMC	571- 43
1N3858	KMC	571- 98
1N3859	KMC	572- 45
1N3860	KMC	573- 4
1N3862	UPI	573- 97
1N3864	HSC	280- 86
IDC	NJRC	
RAYN	SDI	
SSI	TSC	
1N3865	IDC	252- 96
	ITT	

TYPE No.	MFRS	Pg&Line
1N3866	△SET	312- 6
DII	ETC	
IDC	MSC	
SCN	SOD	
SSI	UPI	
1N3867	△SET	330- 96
DII	ETC	
MSC	SCN	
SOD	SSI	
	UPI	
1N3868	△SET	348- 15
CODI	DII	
ETC	IDC	
MSC	SCN	
SOD	SSI	
1N3869	△SET	370- 3
CODI	DII	
ETC	MSC	
SCN	SOD	
	SSI	
1N3870	△SET	384- 61
CODI	DII	
MSC	SCN	
SOD	SSI	
1N3871	△SET	392- 45
CODI	DII	
MSC	SCN	
SCO	SOD	
	SSI	
1N3872	HSC	276- 79
IDC	ITT	
SDI	SES	
SSI	TSC	
1N3873	△GESY	270- 67
IDC	SSI	
	TSC	
1N3873HR	IDC	270- 68
1N3874	IDC	272- 39
SCN	SSI	
	TEC	
1N3875	SCN	278- 96
SSI	TEC	
JAN1N3875	none	278- 97
1N3876	SCN	282- 54
SSI	TEC	
JAN1N3876	none	282- 55
1N3877	SSI	284- 34
	TEC	
1N3878	SCN	285- 28
SSI	TEC	
JAN1N3878	none	285- 29
1N3879	♦DIC	272- 40
♦EDI	ESMF	
♦GESY	IDC	
MISI	♦MOTA	
SCN	SOD	
SOIF	SSI	
TEC	♦TIIB	
TIID	TIIF	
TNC	TRW	
	WESY	
1N3879R	♦GESY	272- 41
SSI	TIID	
	TIIF	
1N3880	♦DIC	278- 98
♦EDI	ESMF	
♦GESY	MISI	
♦MOTA	SCN	
SOD	SOIF	
SSI	TEC	
♦TIIB	TIID	
TIIF	TNC	
TRW	WESY	
JAN1N3880,R	DIC	278- 99
GESY	WESY	
1N3880R	♦GESY	278-100
SSI	TIID	
	TIIF	
1N3881	♦DIC	282- 56
♦EDI	ESMF	
♦GESY	MISI	
♦MOTA	SCN	
SOD	SOIF	
SSI	TEC	
♦TIIB	TIID	
TIIF	TNC	
TRW	WESY	
JAN1N3881,R	DIC	282- 57
GESY	WESY	
1N3881R	♦GESY	282- 58
SSI	TIID	
	TIIF	
1N3882	♦DIC	284- 35
♦EDI	ESMF	
♦GESY	MISI	
♦MOTA	SCN	
SOD	SOIF	
SSI	TEC	
♦TIIB	TIID	
TIIF	TNC	
TRW	WESY	
1N3882R	♦GESY	284- 36
SSI	TIID	
	TIIF	
1N3883	♦DIC	285- 30
♦EDI	ESMF	
♦GESY	MISI	
♦MOTA	SCN	
SOD	SOIF	
SSI	TEC	
♦TIIB	TIID	
TIIF	TNC	
TRW	WESY	

TYPE No.	MFRS	Pg&Line
JAN1N3883,R	DIC	285- 31
GESY	WESY	
1N3883R	♦GESY	285- 32
SSI	TIID	
	TIIF	
1N3884	SCN	272- 42
SSI	TEC	
1N3885	SCN	278-101
SSI	TEC	
JAN1N3885	none	278-102
1N3886	SCN	282- 59
SSI	TEC	
JAN1N3886	none	282- 60
1N3887	SCN	284- 37
SSI	TEC	
1N3888	SCN	285- 33
SSI	TEC	
JAN1N3888	none	285- 34
1N3889	♦DIC	272- 43
♦EDI	♦ESMF	
ETC	GESY	
IDC	MISI	
♦MOTA	SOD	
SOIF	SSI	
TEC	♦TIIB	
TIID	TIIF	
TNC	TRW	
	WESY	
1N3890	♦DIC	278-103
♦EDI	EDL	
♦ESMF	ETC	
GESY	MISI	
♦MOTA	SCN	
SOD	SOIF	
SSI	TEC	
♦TIIB	TIID	
TIIF	TNC	
TRW	WESY	
JAN1N3890,R	DIC	278-104
EDI	GESY	
	WESY	
1N3891	♦DIC	282- 61
♦EDI	♦ESMF	
ETC	GESY	
MISI	♦MOTA	
SCN	SOD	
SOIF	SSI	
TEC	♦TIIB	
TIID	TIIF	
TNC	TRW	
	WESY	
JAN1N3891,R	DIC	282- 62
EDI	GESY	
	WESY	
1N3892	♦DIC	284- 38
♦EDI	♦ESMF	
ETC	GESY	
MISI	♦MOTA	
SCN	SOD	
SOIF	SSI	
TEC	♦TIIB	
TIID	TIIF	
TNC	TRW	
	WESY	
1N3893	♦DIC	285- 35
♦EDI	♦ESMF	
ETC	GESY	
MISI	♦MOTA	
SCN	SOD	
SOIF	SSI	
TEC	♦TIIB	
TIID	TIIF	
TNC	TRW	
	WESY	
JAN1N3893,R	DIC	285- 36
EDI	GESY	
	WESY	
1N3894	SSI	259- 55
1N3895	SSI	259- 34
1N3896	△ESP	165- 36
APD	CODI	
CRL	IDC	
	SSI	
1N3897	△ESP	165- 71
APD	CODI	
CRL	IDC	
	SSI	
1N3898	△ESP	165-107
APD	CODI	
CRL	IDC	
	SSI	
1N3899	♦ESMF	272- 44
♦ETC	GESY	
IDC	MISI	
♦MOTA	SOD	
SOIF	SSI	
TEC	TRW	
	WESY	
1N3900	♦ESMF	278-105
♦ETC	GESY	
MISI	♦MOTA	
SOD	SOIF	
SSI	TEC	
TRW	WESY	
1N3901	♦ESMF	282- 63
♦ETC	GESY	
MISI	♦MOTA	
SOD	SOIF	
SSI	TEC	
TRW	WESY	
1N3902	♦ESMF	284- 39
♦ETC	GESY	
MISI	♦MOTA	

cont next page

△-Registered with JEDEC by this manufacturer

♦-Copy of mfr's data sheet may be ordered from D.A.T.A.

1. TYPE No. CROSS INDEX

IN TYPE NUMBER SEQUENCE

TYPE No.	MFRS	Pg&Line
1N3902		
(cont)	SOD	
SOIF	SSI	
TEC	TRW	
	WESY	
1N3903	♦ESMF	285- 37
♦ETC	GESY	
MISI	♦MOTA	
SOD	SOIF	
SSI	TEC	
TRW	WESY	
1N3904	IDC	272- 45
	SSI	
1N3905	SSI	278-106
1N3906	SSI	282- 64
1N3907	SSI	284- 40
1N3908	SSI	285- 38
1N3909	♦ESMF	272- 46
ETC	GESY	
IDC	MISI	
♦MOTA	SOD	
SOIF	SSI	
TEC	TNC	
TRW	WESY	
JAN1N3909,R	GESY	272- 47
	WESY	
1N3910	♦ESMF	278-107
ETC	GESY	
MISI	♦MOTA	
SOD	SOIF	
SSI	TEC	
TNC	TRW	
	WESY	
JAN1N3910,R	GESY	278-108
	WESY	
1N3911	♦ESMF	282- 65
ETC	GESY	
MISI	♦MOTA	
SOD	SOIF	
SSI	TEC	
TNC	TRW	
	WESY	
JAN1N3911,R	GESY	282- 66
	WESY	
1N3912	♦ESMF	284- 41
ETC	GESY	
MISI	♦MOTA	
SOD	SOIF	
SSI	TEC	
TNC	TRW	
	WESY	
JAN1N3912,R	GESY	284- 42
1N3913	♦ESMF	285- 39
ETC	GESY	
MISI	♦MOTA	
SOD	SOIF	
SSI	TEC	
TNC	TRW	
	WESY	
JAN1N3913,R	GESY	285- 40
1N3914	IDC	272- 48
	SSI	
1N3915	SSI	278-109
1N3916	SSI	282- 67
1N3919	ETC	373- 12
IDC	SOD	
	SSI	
1N3920	SSI	384-110
1N3921	SSI	390- 54
1N3924	ETC	373- 66
	IDC	
1N3929	IDC	260- 78
1N3931	EDL	261- 25
1N3934	EDI	379- 37
ETC	IDC	
	SOD	
1N3935	APD	496- 44
	ITT	
1N3936	APD	496- 27
	ITT	
1N3937	APD	496- 93
	ITT	
1N3938	SEN	313- 32
SOIF	SSI	
1N3939	SEN	332- 19
SOIF	SSI	
1N3940	SEN	349- 40
SOIF	SSI	
1N3941	SOIF	361-105
	SSI	
1N3942	SOIF	372- 21
	SSI	
1N3943	CODI	598- 17
1N3944	△APX	265- 17
IDC	ITT	
PHIC	SSI	
1N3945	CODI	548- 36
♦EAS	TRW	
1N3946	△TRW	561- 8
CODI	♦EAS	
1N3947	△TRW	561- 6
CODI	♦EAS	
1N3949	♦△DIC	205-169
GSE	IDC	
	SOD	
1N3950	△DIC	205- 82
GSE	MSC	
1N3951	△DIC	210- 49
GSE	MSC	
1N3952	ETC	307- 35
	UPI	
1N3953	IDC	269- 74
	ITT	

TYPE No.	MFRS	Pg&Line
1N3954	IDC	270- 69
SSI	TSC	
1N3956	IDC	267- 23
1N3957	△UNI	370- 92
MSC	SET	
	TRW	
JAN1N3957	MSC	376- 39
	SET	
1N3958	SOD	280- 4
SSI	TNC	
1N3958C	SSI	279-108
1N3959	SOD	283- 53
SSI	TNC	
1N3959C	SSI	283- 43
1N3960	SOD	284- 64
SSI	TNC	
1N3960C	SSI	284- 61
1N3961	SOD	285-105
SSI	TNC	
1N3961C	SSI	285- 93
1N3962	△GESY	286- 60
SOD	SSI	
	TNC	
1N3962C	SSI	286- 58
1N3963	SOD	287- 55
SSI	TNC	
1N3963C	SSI	287- 42
1N3964	△SYN	316- 33
EDL	ETC	
IDC	SOD	
SSI	UPI	
1N3965	EDL	335- 40
ETC	IDC	
SOD	SSI	
SYN	UPI	
1N3966	△SYN	352- 36
EDL	ETC	
IDC	SOD	
	SSI	
1N3967	△SYN	364- 60
EDL	ETC	
IDC	SOD	
	SSI	
1N3968	△SYN	317- 8
EDL	ETC	
IDC	SSI	
	TUNL	
1N3969	△SYN	336- 28
EDL	ETC	
IDC	SSI	
	TUNL	
1N3970	△SYN	352-110
EDL	IDC	
SSI	TUNL	
1N3971	△SYN	365- 16
EDL	IDC	
SSI	TUNL	
1N3972	△SYN	317- 68
EDL	SES	
	SSI	
1N3973	△SYN	336- 96
EDL	SES	
	SSI	
1N3974	△SYN	353- 57
EDL	SES	
	SSI	
1N3975	△SYN	365- 66
EDL	SES	
	SSI	
1N3976	△SYN	318- 18
EDL	ETC	
	SES	
1N3977	△SYN	337- 60
EDL	ETC	
	SES	
1N3978	△SYN	354- 11
EDL	SES	
1N3979	△SYN	366- 15
EDL	SES	
1N3981	△UNI	313- 99
MSC	TRW	
	UPI	
1N3982	△UNI	332- 92
MSC	TRW	
	UPI	
1N3983	△UNI	349-107
MSC	TRW	
1N3984	♦DIC	172- 85
GSE	IDC	
	SAR	
1N3985	△TEC	174- 21
♦DIC	GSE	
IDC	SAR	
1N3986	△INRC	175-115
♦DIC	GSE	
IDC	INRB	
INRI	INRJ	
	SAR	
1N3987	△WESY	356- 87
EDI	ETC	
GESY	INRB	
INRC	INRI	
INRJ	MOTA	
SOD	SSI	
	TUNL	
1N3988	△WESY	363- 40
EDI	ESMF	
ETC	GESY	
IDC	INRB	
INRC	INRI	
INRJ	MISI	
MOTA	SOD	
SOIF	SSI	
	TUNL	

TYPE No.	MFRS	Pg&Line
1N3989	△WESY	367- 62
EDI	ESMF	
ETC	GESY	
IDC	INRB	
INRC	INRI	
INRJ	MISI	
MOTA	SOD	
SSI	TUNL	
1N3990	△WESY	373- 34
EDI	ESMF	
ETC	GESY	
IDC	INRB	
INRC	INRI	
INRJ	MISI	
MOTA	SOD	
SOIF	SSI	
	TUNL	
1N3991	GELC	248- 64
IDC	UPI	
1N3992	△TNC	261- 56
CODI	EDL	
ITT	SCO	
	SET	
JAN1N3992	none	397- 70
1N3993,A	♦△MOTA	169- 13
♦DIC	DII	
ETC	GSE	
IDC	INRB	
INRC	INRI	
INRJ	SES	
SSI	TNC	
JAN1N3993A,RA	DIC	169- 14
INRC	MOTA	
1N3994,A	♦△MOTA	170- 9
♦DIC	DII	
ETC	GSE	
IDC	INRB	
INRC	INRI	
INRJ	SES	
SSI	TNC	
JAN1N3994A,RA	DIC	170- 10
INRC	MOTA	
1N3995,A	♦△MOTA	171- 21
♦DIC	DII	
ETC	GSE	
IDC	INRB	
INRC	INRI	
INRJ	SES	
SSI	TNC	
JAN1N3995A,RA	DIC	171- 22
INRC	MOTA	
1N3996,A	♦△MOTA	172- 53
♦DIC	DII	
ETC	GSE	
IDC	INRB	
INRC	INRI	
INRJ	SES	
SSI	TNC	
JAN1N3996A,RA	DIC	172- 54
INRC	MOTA	
1N3997,A	♦△MOTA	173-138
♦DIC	DII	
ETC	GSE	
IDC	INRB	
INRC	INRI	
INRJ	SAR	
SES	SSI	
	TNC	
JAN1N3997A,RA	DIC	173-139
INRC	MOTA	
1N3998,A	♦△MOTA	175-116
♦DIC	DII	
ETC	GSE	
IDC	INRB	
INRC	INRI	
INRJ	SAR	
SES	SSI	
TNC	TRW	
JAN1N3998A,RA	DIC	175-117
INRC	MOTA	
1N3999,A	♦△MOTA	178-121
♦DIC	DII	
ETC	GSE	
IDC	INRB	
INRC	INRI	
INRJ	SAR	
SES	SSI	
TNC	TRW	
JAN1N3999A,RA	DIC	178-122
INRC	MOTA	
1N4000,A	♦△MOTA	180-164
♦DIC	DII	
ETC	GSE	
IDC	INRB	
INRC	INRI	
INRJ	ITT	
SAR	SES	
SSI	TNC	
	TRW	
JAN1N4000A,RA	DIC	180-165
INRC	MOTA	
1N4001	♦△MOTA	294- 31
BNT	BRA	
CNS	CRL	
♦DIC	EDI	
EDL	EMLS	
ETC	FERB	
♦GIC	HSC	
IDC	INRB	
♦INRC	INRI	
INRJ	MOTA	
ITT	SAR	
PWC	QUA	
cont.next col		

TYPE No	MFRS	Pg&Line
1N4001		
(cont)	SAR	
SCN	SCO	
SDI	SEN	
♦SES	SET	
SOD	SST	
TEK	♦TII	
TIIB	TIID	
TIIF	TNC	
UPI	♦WAB	
1N4002	♦△MOTA	301- 14
BNT	BRA	
CNS	CRL	
♦DIC	EDI	
EDL	EMLS	
ETC	FERB	
♦GIC	HSC	
IDC	INRB	
♦INRC	INRI	
INRJ	INTG	
ITT	MSC	
PWC	QUA	
SAR	SCN	
SCO	SDI	
SEN	♦SES	
SET	SOD	
SST	TEK	
♦TII	TIIB	
TIID	TIIF	
TNC	UPI	
	♦WAB	
1N4003	♦△MOTA	312- 12
BNT	BRA	
CNS	CRL	
♦DIC	EDI	
EDL	EMLS	
ETC	FERB	
♦GIC	HSC	
IDC	INRB	
♦INRC	INRI	
INRJ	INTG	
ITT	MSC	
PWC	QUA	
SAR	SCN	
SCO	SDI	
SEN	♦SES	
SET	SOD	
SST	TEK	
♦TII	TIIB	
TIID	TIIF	
TNC	UPI	
	♦WAB	
1N4004	♦△MOTA	330-104
BNT	BRA	
CNS	CRL	
♦DIC	EDI	
EDL	EMLS	
ETC	FERB	
♦GIC	HSC	
INRB	♦INRC	
INRI	INRJ	
INTG	ITT	
MSC	PWC	
QUA	SAR	
SCN	SCO	
SDI	SEN	
♦SES	SET	
SOD	SST	
TEK	♦TII	
TIIB	TIID	
TIIF	TNC	
UPI	♦WAB	
1N4005	♦△MOTA	348- 21
BNT	BRA	
CNS	CRL	
♦DIC	EDI	
EDL	EMLS	
ETC	FERB	
♦GIC	HSC	
IDC	INRB	
♦INRC	INRI	
INRJ	INTG	
ITT	MSC	
PWC	QUA	
SAR	SCN	
SCO	SDI	
SEN	♦SES	
SET	SOD	
SST	TEK	
♦TII	TIIB	
TIID	TIIF	
TNC	UPI	
	♦WAB	
1N4006	♦△MOTA	361- 2
BNT	BRA	
CNS	♦DIC	
EDI	EDL	
EMLS	ETC	
FERB	♦GIC	
HSC	IDC	
INRB	♦INRC	
INRI	INRJ	
INTG	ITT	
MSC	PWC	
QUA	SAR	
SCN	SCO	
SDI	SEN	
♦SES	SET	
SOD	SST	
TEK	♦TII	
TIIB	TIID	
TIIF	TNC	
UPI	♦WAB	

TYPE No.	MFRS	Pg&Line
1N4007	♦△MOTA	371- 37
BNT	BRA	
CNS	♦DIC	
EDI	EDL	
EMLS	ETC	
FERB	♦GIC	
HSC	IDC	
INRB	♦INRC	
INRI	INRJ	
INTG	ITT	
MSC	PWC	
QUA	SAR	
SCN	SCO	
SDI	SEN	
♦SES	SET	
SOD	SSI	
SST	TEK	
♦TII	TIIB	
TIID	TIIF	
TNC	UPI	
	♦WAB	
1N4008	△GIC	264- 85
GELC	IDC	
	SDI	
1N4009	APX	266- 37
CODI	♦ESMF	
FSC	GESY	
GIC	HSC	
IDC	INTG	
ITT	MISI	
♦MULB	♦PHIC	
♦QUA	SDI	
SES	SHWG	
SOD	TEC	
TIID	♦TIIF	
	TSC	
1N4010	CODI	174-149
♦DIC	GSE	
IDC	♦MSC	
TNC	TSC	
	♦USS	
1N4011	SSI	370- 14
1N4012	ERI	357- 10
ETC	IDC	
INRB	INRC	
INRI	INRJ	
SOD	SSI	
	TUNL	
1N4013	ERI	364- 5
ETC	IDC	
INRB	INRC	
INRI	INRJ	
SOD	SSI	
	TUNL	
1N4014	ERI	367- 89
ETC	IDC	
INRB	INRC	
INRI	INRJ	
SOD	SSI	
	TUNL	
1N4015	ERI	373- 96
ETC	IDC	
INRB	INRC	
INRI	INRJ	
SOD	SSI	
	TUNL	
1N4016,A,B	△USS	183- 1
GSE	IDC	
MSC	SSI	
1N4017,A,B	△USS	186-117
GSE	IDC	
MSC	SSI	
1N4018,A,B	△USS	189- 15
GSE	IDC	
MSC	SSI	
1N4019,A,B	△USS	191- 5
GSE	IDC	
MSC	SSI	
1N4020,A,B	△USS	193-104
GSE	IDC	
MSC	SSI	
1N4021,A,B	△USS	195-129
GSE	IDC	
MSC	SSI	
1N4022,A,B	△USS	198-105
GSE	IDC	
MSC	SSI	
1N4023,A,B	△USS	200- 75
GSE	IDC	
MSC	SSI	
1N4024,A,B	△USS	202-197
GSE	IDC	
MSC	SSI	
1N4025,A,B	△USS	205-134
GSE	IDC	
MSC	SSI	
1N4026,A,B	△USS	207-120
GSE	IDC	
MSC	SSI	
1N4027,A,B	△USS	209- 96
GSE	IDC	
MSC	SSI	
1N4028,A,B	△USS	211-187
GSE	IDC	
MSC	SSI	
1N4029,A,B	△USS	213-180
GSE	IDC	
MSC	SSI	
1N4030,A,B	△USS	215-151
GSE	IDC	
MSC	SSI	
1N4031,A,B	△USS	217- 45
GSE	IDC	
MSC	SSI	

△-Registered with JEDEC by this manufacturer

♦-Copy of mfr's data sheet may be ordered from D.A.T.A.

1. TYPE No. CROSS INDEX

IN TYPE NUMBER SEQUENCE

TYPE No.	MFRS	Pg&Line
1N4032,A,B	△USS	218-122
GSE	IDC	
MSC	SSI	
1N4033,A,B	△USS	220- 14
GSE	IDC	
MSC	SSI	
1N4034,A,B	△USS	221-144
GSE	IDC	
MSC	SSI	
1N4035,A,B	△USS	223- 85
GSE	IDC	
MSC	SSI	
1N4036,A,B	△USS	224-176
GSE	IDC	
MSC	SSI	
1N4037,A,B	△USS	226-116
GSE	IDC	
MSC	SSI	
1N4038,A,B	△USS	227-179
GSE	IDC	
MSC	SSI	
1N4039,A,B	△USS	229- 93
GSE	IDC	
MSC	SSI	
1N4040,A,B	△USS	230-169
GSE	IDC	
MSC	SSI	
1N4041,A,B	△USS	232-101
GSE	IDC	
	MSC	
1N4042,A,B	△USS	233-155
GSE	IDC	
	MSC	
1N4043	IDC	266- 38
1N4044	△WESY	298- 10
EDL	ETC	
GESY	IDC	
INRB	INRC	
INRI	INRJ	
SAR	SES	
SSI	SYN	
1N4045	△WESY	306- 75
EDL	ETC	
GESY	IDC	
INRB	INRC	
INRI	INRJ	
SAR	SES	
SSI	SYN	
1N4046	△WESY	309- 10
EDL	ETC	
GESY	IDC	
INRB	INRC	
INRI	INRJ	
SAR	SES	
SSI	SYN	
1N4047	△WESY	318- 26
EDL	ETC	
GESY	IDC	
INRB	INRC	
INRI	INRJ	
SAR	SES	
SSI	SYN	
1N4048	△WESY	319-103
EDL	ETC	
GESY	IDC	
INRB	INRC	
INRI	INRJ	
SAR	SES	
SSI	SYN	
1N4049	△WESY	326- 60
EDL	ETC	
GESY	IDC	
INRB	INRC	
INRI	INRJ	
SAR	SES	
SSI	SYN	
1N4050	△WESY	337- 68
EDL	ETC	
GESY	IDC	
INRB	INRC	
INRI	INRJ	
SAR	SES	
SSI	SYN	
1N4051	△WESY	344- 97
EDL	GESY	
IDC	INRB	
INRC	INRI	
INRJ	SAR	
SES	SSI	
	SYN	
1N4052	△WESY	354- 19
EDL	GESY	
IDC	INRB	
INRC	INRI	
INRJ	SAR	
SES	♦SSI	
	SYN	
1N4053	△WESY	358- 24
EDL	GESY	
IDC	INRB	
INRC	INRI	
INRJ	SES	
♦SSI	SYN	
1N4054	△WESY	366- 21
EDL	GESY	
IDC	INRB	
INRC	INRI	
INRJ	SES	
♦SSI	SYN	
1N4055	△WESY	368- 59
EDL	GESY	
IDC	INRB	
INRC	INRI	
cont next col		

TYPE No.	MFRS	Pg&Line
1N4055		
(cont.)	INRJ	
SES	♦SSI	
	SYN	
1N4056	△WESY	375- 62
EDL	GESY	
IDC	INRB	
INRC	INRI	
INRJ	SES	
♦SSI	SYN	
1N4057	CODI	193-199
♦DIC	GSE	
IDC	MOTA	
MSC	SDI	
SOD	SSI	
TSC	USS	
1N4057A	♦△DIC	193-200
CODI	GSE	
IDC	MOTA	
SDI	SOD	
SSI	TSC	
	USS	
1N4058	CODI	196-168
♦DIC	GSE	
IDC	MOTA	
MSC	SDI	
SOD	SSI	
TSC	USS	
1N4058A	CODI	196-169
♦DIC	GSE	
IDC	MOTA	
SDI	SOD	
SSI	TSC	
	USS	
1N4059	CODI	200-161
♦DIC	GSE	
IDC	MOTA	
MSC	SDI	
SOD	SOIF	
SSI	TSC	
	USS	
1N4059A	♦△DIC	200-162
CODI	GSE	
IDC	MOTA	
SDI	SOD	
SOIF	SSI	
TSC	USS	
1N4060	♦△DIC	203- 94
CODI	GSE	
IDC	MOTA	
MSC	SDI	
SOD	SOIF	
SSI	TSC	
	USS	
1N4060A	CODI	203- 95
♦DIC	GSE	
IDC	MOTA	
SDI	SOD	
SOIF	SSI	
TSC	USS	
1N4061	♦△DIC	206- 21
CODI	GSE	
IDC	MOTA	
MSC	SDI	
SOD	SSI	
TSC	USS	
1N4061A	♦△DIC	206- 22
CODI	GSE	
IDC	MOTA	
SDI	SOD	
SSI	TSC	
	USS	
1N4062	♦△DIC	208- 22
CODI	GSE	
IDC	MOTA	
MSC	SDI	
SOD	SSI	
TSC	USS	
1N4062A	♦△DIC	208- 23
CODI	GSE	
IDC	MOTA	
SDI	SOD	
SSI	TSC	
	USS	
1N4063	♦△DIC	211-132
CODI	GSE	
IDC	MOTA	
MSC	SDI	
SOD	SOIF	
SSI	TSC	
	USS	
1N4063A	♦△DIC	211-133
CODI	GSE	
IDC	MOTA	
SDI	SOD	
SOIF	SSI	
TSC	USS	
1N4064	♦△DIC	213-127
CODI	GSE	
IDC	MOTA	
MSC	SDI	
SOD	SOIF	
SSI	TSC	
	USS	
1N4064A	♦△DIC	213-128
CODI	GSE	
IDC	MOTA	
SDI	SOD	
SOIF	SSI	
TSC	USS	
1N4065	♦△DIC	215- 96
CODI	GSE	
IDC	MOTA	
cont next col		

TYPE No.	MFRS	Pg&Line
1N4065		
(cont.)	MSC	
SDI	SOD	
SOIF	SSI	
TSC	USS	
1N4065A	♦△DIC	215- 97
CODI	GSE	
IDC	MOTA	
SDI	SOD	
SOIF	SSI	
TSC	USS	
1N4066	♦△DIC	217-119
CODI	GSE	
IDC	MOTA	
MSC	SDI	
SOD	SSI	
TSC	USS	
1N4066A	♦△DIC	217-120
CODI	GSE	
IDC	MOTA	
SDI	SOD	
SSI	TSC	
	USS	
1N4067	♦△DIC	219-161
CODI	GSE	
IDC	MOTA	
MSC	SDI	
SOD	SSI	
TSC	USS	
1N4067A	♦△DIC	219-162
CODI	GSE	
IDC	MOTA	
SDI	SOD	
SSI	TSC	
	USS	
1N4068	♦△DIC	221-105
CODI	GSE	
IDC	MOTA	
MSC	SDI	
SOD	SSI	
TSC	USS	
1N4068A	♦△DIC	221-106
CODI	GSE	
IDC	MOTA	
SDI	SOD	
SSI	TSC	
	USS	
1N4069	♦△DIC	223- 62
CODI	GSE	
IDC	MOTA	
MSC	SDI	
SOD	SSI	
TSC	USS	
1N4069A	♦△DIC	223- 63
CODI	GSE	
IDC	MOTA	
SDI	SOD	
SSI	TSC	
	USS	
1N4070	♦△DIC	224-149
CODI	GSE	
IDC	MOTA	
MSC	SDI	
SOD	SSI	
TSC	USS	
1N4070A	♦△DIC	224-150
CODI	GSE	
IDC	MOTA	
SDI	SOD	
SSI	TSC	
	USS	
1N4071	♦△DIC	226- 93
CODI	GSE	
IDC	MOTA	
MSC	SDI	
SOD	SSI	
TSC	USS	
1N4071A	♦△DIC	226- 94
CODI	GSE	
IDC	MOTA	
SDI	SOD	
SSI	TSC	
	USS	
1N4072	♦△DIC	227-154
CODI	GSE	
IDC	MOTA	
MSC	SDI	
SOD	SSI	
TSC	USS	
1N4072A	♦△DIC	227-155
CODI	GSE	
IDC	MOTA	
SDI	SOD	
SSI	TSC	
	USS	
1N4073	♦△DIC	229- 67
CODI	GSE	
IDC	MOTA	
MSC	SDI	
SOD	SSI	
TSC	USS	
1N4073A	♦△DIC	229- 68
CODI	GSE	
IDC	MOTA	
SDI	SOD	
SSI	TSC	
	USS	
1N4074	♦△DIC	230-145
CODI	GSE	
IDC	MOTA	
MSC	SDI	
SOD	SSI	
TSC	USS	

TYPE No.	MFRS	Pg&Line
1N4074A	♦△DIC	230-146
CODI	GSE	
IDC	MOTA	
SDI	SOD	
SSI	TSC	
	USS	
1N4075	♦△DIC	231- 96
CODI	GSE	
IDC	MOTA	
MSC	SDI	
SOD	SSI	
TSC	USS	
1N4075A	♦△DIC	231- 97
CODI	GSE	
IDC	MOTA	
SDI	SOD	
SSI	TSC	
	USS	
1N4076	♦△DIC	232- 79
CODI	GSE	
IDC	MOTA	
MSC	SDI	
SOD	SSI	
TSC	USS	
1N4076A	♦△DIC	232- 80
CODI	GSE	
IDC	MOTA	
SDI	SOD	
SSI	TSC	
	USS	
1N4077	♦△DIC	233-128
CODI	GSE	
IDC	MOTA	
MSC	SDI	
SOD	SSI	
TSC	USS	
1N4077A	♦△DIC	233-129
CODI	GSE	
IDC	MOTA	
SDI	SOD	
SSI	TSC	
	USS	
1N4078	♦△DIC	234-115
CODI	GSE	
IDC	MOTA	
MSC	SDI	
SOD	SSI	
TSC	USS	
1N4078A	♦△DIC	234-116
CODI	GSE	
IDC	MOTA	
SDI	SOD	
SSI	TSC	
	USS	
1N4079	♦△DIC	235- 87
CODI	GSE	
IDC	MOTA	
MSC	SDI	
SOD	SSI	
TSC	USS	
1N4079A	♦△DIC	235- 88
CODI	GSE	
IDC	MOTA	
SDI	SOD	
SSI	TSC	
	USS	
1N4080	♦△DIC	236-114
CODI	GSE	
IDC	MOTA	
MSC	SDI	
SOD	SSI	
TSC	USS	
1N4080A	♦△DIC	236-115
CODI	GSE	
IDC	MOTA	
SDI	SOD	
SSI	TSC	
	USS	
1N4081	♦△DIC	237-152
CODI	GSE	
IDC	MOTA	
MSC	SDI	
SOD	SSI	
TSC	USS	
1N4081A	♦△DIC	237-153
CODI	GSE	
IDC	MOTA	
SDI	SOD	
SSI	TSC	
	USS	
1N4082	♦△DIC	238-128
CODI	GSE	
IDC	MOTA	
MSC	SDI	
SOD	SSI	
TSC	USS	
1N4082A	♦△DIC	238-129
CODI	GSE	
IDC	MOTA	
SDI	SOD	
SSI	TSC	
	USS	
1N4083	♦△DIC	239-134
CODI	GSE	
IDC	MOTA	
MSC	SDI	
SOD	SSI	
TSC	USS	
1N4083A	♦△DIC	239-135
CODI	GSE	
IDC	MOTA	
SDI	SOD	
SSI	TSC	
	USS	

TYPE No.	MFRS	Pg&Line
1N4084	♦△DIC	241-135
CODI	GSE	
IDC	MOTA	
MSC	SDI	
SOD	SSI	
TSC	USS	
1N4084A	♦△DIC	241-136
CODI	GSE	
IDC	MOTA	
SDI	SOD	
SSI	TSC	
	USS	
1N4085	♦△DIC	243-133
CODI	GSE	
IDC	MOTA	
MSC	SDI	
SOD	SSI	
TSC	USS	
1N4085A	♦△DIC	243-134
CODI	GSE	
IDC	MOTA	
SDI	SOD	
SSI	TSC	
	USS	
1N4086	△FSC	274- 47
IDC	SDI	
SSI	TSC	
1N4087	IDC	270- 26
SDI	TEC	
	TSC	
JAN1N4087	TEC	270- 27
1N4088	IDC	248- 27
	UPI	
1N4089	△SOD	331- 34
EDI	♦ETC	
IDC	TEK	
	UPI	
1N4090	GESY	581- 26
1N4091	△MIC	533- 98
1N4092	AMD	249- 99
ETC	IDC	
SDI	SOIF	
TEC	TSC	
	UPI	
1N4093	AMD	249-100
ETC	IDC	
SDI	TSC	
	UPI	
1N4095	CODI	171- 71
CRL	DIC	
GSE	IDC	
MSC	SDI	
	TSC	
1N4096	△UNI	231-122
CRL	IDC	
MSC	SDI	
	TRW	
1N4097	△UNI	233-136
CRL	IDC	
MSC	SDI	
	TRW	
1N4098	△UNI	239-136
CRL	IDC	
MSC	SDI	
	TRW	
1N4099	♦△MOTA	176-210
APD	CRL	
♦DIC	GSE	
HSC	IDC	
MSC	SDI	
SOIF	SSI	
TEC	TEK	
♦TII	TRW	
TSC	USS	
JAN1N4099	none	177- 26
1N4100	♦△MOTA	179- 45
APD	CRL	
♦DIC	GSE	
HSC	IDC	
MSC	SDI	
SOIF	SSI	
TEC	TEK	
♦TII	TRW	
TSC	USS	
JAN1N4100	none	179- 79
1N4101	♦△MOTA	181- 97
CRL	♦DIC	
GSE	HSC	
IDC	MSC	
SDI	SOIF	
SSI	TEC	
TEK	♦TII	
TRW	TSC	
	USS	
JAN1N4101	none	181-135
1N4102	♦△MOTA	184- 15
APD	CRL	
♦DIC	GSE	
HSC	IDC	
MSC	SDI	
SOIF	SSI	
TEC	TEK	
♦TII	TRW	
TSC	USS	
JAN1N4102	none	184- 38
1N4103	♦△MOTA	185- 6
APD	CRL	
♦DIC	GSE	
HSC	IDC	
MSC	SDI	
SOIF	SSI	
TEC	TEK	
♦TII	TRW	
TSC	USS	

△-Registered with JEDEC by this manufacturer

♦-Copy of mfr's data sheet may be ordered from D.A.T.A.

1. TYPE No. CROSS INDEX

IN TYPE NUMBER SEQUENCE

TYPE No	MFRS	Pg&Line
JAN1N4103	none	185- 59
1N4104	♦△MOTA	187- 92
APD	CRL	
♦DIC	GSE	
HSC	IDC	
MSC	SDI	
SSI	TEC	
TEK	♦TII	
TRW	TSC	
	USS	
JAN1N4104	none	187-125
1N4105	♦△MOTA	189-137
APD	CRL	
♦DIC	GSE	
HSC	IDC	
MSC	SDI	
SSI	TEC	
TEK	♦TII	
TRW	TSC	
	USS	
JAN1N4105	none	189-162
1N4106	♦△MOTA	191-174
APD	CRL	
♦DIC	GSE	
HSC	IDC	
MSC	SDI	
SSI	TEC	
TEK	♦TII	
TRW	TSC	
	USS	
JAN1N4106	none	192- 6
1N4107	♦△MOTA	194- 72
APD	CRL	
♦DIC	HSC	
IDC	MSC	
SDI	SSI	
TEC	TEK	
TRW	TSC	
	USS	
JAN1N4107	none	194- 91
1N4108	♦△MOTA	196- 21
APD	CRL	
♦DIC	HSC	
IDC	MSC	
SDI	SSI	
TEC	TEK	
TRW	TSC	
	USS	
JAN1N4108	none	196- 27
1N4109	♦△MOTA	197- 13
APD	CRL	
♦DIC	HSC	
IDC	MSC	
SDI	SSI	
TEC	TEK	
TRW	TSC	
	USS	
JAN1N4109	none	197- 38
1N4110	♦△MOTA	199- 23
APD	CRL	
♦DIC	HSC	
IDC	MSC	
SDI	SSI	
TEC	TEK	
TRW	TSC	
	USS	
JAN1N4110	none	199- 43
1N4111	♦△MOTA	200-168
APD	CRL	
♦DIC	HSC	
IDC	MSC	
SDI	SSI	
TEC	TEK	
TRW	TSC	
	USS	
JAN1N4111	none	200-172
1N4112	♦△MOTA	201- 96
APD	CRL	
♦DIC	HSC	
IDC	MSC	
SDI	SSI	
TEC	TEK	
TRW	TSC	
	USS	
JAN1N4112	none	201-123
1N4113	♦△MOTA	203-110
APD	CRL	
♦DIC	HSC	
IDC	MSC	
SDI	SSI	
TEC	TEK	
TRW	TSC	
	USS	
JAN1N4113	none	203-116
1N4114	♦△MOTA	204- 78
APD	CRL	
♦DIC	HSC	
IDC	MSC	
SDI	SSI	
TEC	TEK	
TRW	TSC	
	USS	
JAN1N4114	none	204- 96
1N4115	♦△MOTA	206- 45
APD	CRL	
♦DIC	HSC	
IDC	MSC	
SDI	SSI	
TEC	TEK	
TRW	TSC	
	USS	
JAN1N4115	none	206- 65
1N4116	♦△MOTA	208- 49

cont next col.

TYPE No.	MFRS	Pg&Line
1N4116		
(cont)	APD	
CRL	♦DIC	
HSC	IDC	
MSC	SDI	
SSI	TEC	
TEK	TRW	
TSC	USS	
JAN1N4116	none	208- 63
1N4117	♦△MOTA	209-185
APD	CRL	
♦DIC	HSC	
IDC	MSC	
SDI	SSI	
TEC	TEK	
TRW	TSC	
	USS	
JAN1N4117	none	209-187
1N4118	♦△MOTA	210-114
APD	CRL	
♦DIC	HSC	
IDC	MSC	
SDI	SSI	
TEC	TEK	
TRW	TSC	
	USS	
JAN1N4118	none	210-130
1N4119	♦△MOTA	212- 88
APD	CRL	
♦DIC	HSC	
IDC	MSC	
SDI	SSI	
TEC	TEK	
TRW	TSC	
	USS	
JAN1N4119	none	212- 91
1N4120	♦△MOTA	212-152
APD	CRL	
♦DIC	HSC	
IDC	MSC	
SDI	SSI	
TEC	TEK	
TRW	TSC	
	USS	
JAN1N4120	none	212-165
1N4121	♦△MOTA	214-101
APD	CRL	
♦DIC	IDC	
MSC	SDI	
SSI	TEC	
TEK	TRW	
TSC	USS	
JAN1N4121	none	214-116
1N4122	♦△MOTA	216- 67
CRL	♦DIC	
IDC	MSC	
SDI	SSI	
TEC	TEK	
TRW	TSC	
	USS	
JAN1N4122	none	216- 74
1N4123	♦△MOTA	217-141
CRL	♦DIC	
IDC	MSC	
SDI	SSI	
TEC	TEK	
TRW	TSC	
	USS	
JAN1N4123	none	217-148
1N4124	♦△MOTA	219- 47
CRL	♦DIC	
IDC	MSC	
SDI	SSI	
TEC	TEK	
TRW	TSC	
	USS	
JAN1N4124	none	219- 53
1N4125	♦△MOTA	220-168
CRL	♦DIC	
IDC	MSC	
SDI	SSI	
TEC	TEK	
TSC	USS	
JAN1N4125	none	220-175
1N4126	♦△MOTA	222-127
CRL	♦DIC	
IDC	MSC	
SDI	SSI	
TEC	TEK	
TSC	USS	
JAN1N4126	none	222-130
1N4127	♦△MOTA	224- 18
CRL	♦DIC	
IDC	MSC	
SDI	SSI	
TEC	TEK	
TSC	USS	
JAN1N4127	none	224- 22
1N4128	♦△MOTA	225-100
CRL	♦DIC	
IDC	MSC	
SDI	SSI	
TEC	TEK	
TSC	USS	
JAN1N4128	none	225-101
1N4129	♦△MOTA	225-158
CRL	♦DIC	
IDC	MSC	
SDI	SSI	
TEC	TEK	
TSC	USS	
JAN1N4129	none	225-161
1N4130	♦△MOTA	227- 26

cont next col

TYPE No.	MFRS	Pg&Line
1N4130		
(cont)	CRL	
♦DIC	IDC	
MSC	SDI	
SSI	TEC	
TEK	TSC	
	USS	
JAN1N4130	none	227- 31
1N4131	♦△MOTA	228-128
CRL	♦DIC	
IDC	MSC	
SDI	SSI	
TEC	TEK	
TSC	USS	
JAN1N4131	none	228-131
1N4132	♦△MOTA	230- 26
CRL	♦DIC	
IDC	MSC	
SDI	SSI	
TEC	TEK	
TSC	USS	
JAN1N4132	none	230- 30
1N4133	CRL	231- 76
♦DIC	IDC	
♦MOTA	MSC	
SDI	SSI	
TEC	TEK	
TSC	USS	
JAN1N4133	none	231- 77
1N4134	♦△MOTA	231-151
CRL	♦DIC	
IDC	MSC	
SDI	SSI	
TEC	TEK	
TSC	USS	
JAN1N4134	none	231-154
1N4135	♦△MOTA	233- 5
CRL	♦DIC	
IDC	MSC	
SDI	TEC	
TEK	TSC	
	USS	
JAN1N4135	none	233- 10
1N4136	♦△TUNL	317- 28
IDC	INRB	
INRC	INRI	
INRJ	SSI	
SYN	WESY	
1N4137	♦△TUNL	336- 50
ETC	IDC	
INRB	INRC	
INRI	INRJ	
SSI	SYN	
	WESY	
1N4138	♦△TUNL	353- 21
IDC	INRB	
INRC	INRI	
INRJ	SSI	
SYN	WESY	
1N4139	△SOD	295- 67
♦DII	EDI	
EDL	HSC	
IDC	PWC	
SCN	SCO	
SSI	TEC	
TEK	UPI	
1N4140	△SOD	302-104
♦DII	EDI	
EDL	HSC	
IDC	PWC	
SCN	SCO	
SSI	TEC	
TEK	UPI	
1N4141	△SOD	314- 4
♦DII	♦EDI	
EDL	HSC	
IDC	PWC	
SCN	SCO	
SSI	TEC	
TEK	UPI	
1N4142	△SOD	332-105
♦DII	♦EDI	
EDL	HSC	
IDC	PWC	
SCN	SCO	
SSI	TEC	
TEK	UPI	
1N4143	△SOD	350- 13
♦DII	♦EDI	
EDL	HSC	
IDC	PWC	
SCN	SCO	
SSI	TEC	
	TEK	
1N4144	△SOD	362- 74
♦DII	♦EDI	
EDL	HSC	
IDC	PWC	
SCN	SCO	
SSI	TEC	
	TEK	
1N4145	△SOD	372- 85
♦EDI	EDL	
HSC	IDC	
PWC	SCN	
SCO	SSI	
TEC	TEK	
1N4146	△SOD	378-108
♦EDI	EDL	
HSC	IDC	
PWC	SCN	
SCO	SSI	
TEC	TEK	

TYPE No.	MFRS	Pg&Line
1N4147	HSC	267- 74
IDC	SOD	
	TSC	
1N4148	△GESY	275- 26
AEIL	APD	
APX	♦BNT	
EMLS	♦ESMF	
♦FSC	GIC	
HSC	IDC	
INTG	ITT	
♦ITTB	MCPE	
MISI	MSC	
♦MULB	♦NPC	
♦PHIC	QUA	
RADF	SCN	
SDI	SES	
TEC	♦TFKG	
♦TII	TIIB	
TIID	TIIF	
TSC	UPI	
♦VALG	♦WAB	
JAN1N4148	FSC	277- 99
GESY	GIC	
ITT	TEC	
TII	TSC	
1N4149	△GESY	275- 27
APD	BNT	
EMLS	♦ESMF	
FSC	GIC	
HSC	IDC	
ITT	♦ITTB	
MISI	MSC	
♦MULB	♦NPC	
QUA	SCN	
SDI	SES	
TEC	♦TFKG	
♦TII	TIIB	
TIID	TIIF	
TSC	♦WAB	
1N4150	♦△GESY	271- 21
APD	APX	
♦BNT	EMLS	
♦ESMF	FSC	
GIC	HSC	
IDC	ITT	
♦ITTB	MCPE	
MISI	MSC	
♦NPC	♦PHIC	
QUA	RADF	
SCN	SDI	
SES	TEC	
TII	TIIB	
TIID	TIIF	
TSC	♦VALG	
JAN1N4150	ITT	271- 22
1N4151	△GESY	275- 28
APD	APX	
BNT	EMLS	
♦ESMF	FSC	
GIC	HSC	
IDC	INTG	
ITT	♦ITTB	
MCPE	MISI	
MSC	♦NPC	
♦PHIC	QUA	
♦RADF	SCN	
SDI	SES	
TEC	TFKG	
♦TII	TIID	
TIIF	TSC	
	♦VALG	
1N4152	♦△GESY	269- 9
AEIL	APD	
BNT	EMLS	
♦ESMF	FSC	
GIC	HSC	
IDC	ITT	
ITTB	MISI	
MSC	♦NPC	
♦QUA	SCN	
SDI	SES	
TEC	♦TFKG	
♦TII	TIID	
♦TIIF	TSC	
1N4153	♦△GESY	275- 29
APD	BNT	
EMLS	♦ESMF	
FSC	GIC	
HSC	IDC	
ITT	MISI	
MSC	♦NPC	
♦QUA	SCN	
SDI	SES	
TEC	♦TFKG	
♦TII	TIID	
♦TIIF	TSC	
JAN1N4153	GESY	270- 1
ITT	TII	
1N4154	△GESY	268- 56
AEIL	APD	
APX	BNT	
EMLS	♦ESMF	
FSC	GIC	
HSC	IDC	
INTG	ITT	
♦ITTB	MISI	
MSC	♦NPC	
♦PHIC	QUA	
SCN	SDI	
SES	TEC	
TFKG	♦TII	
TIID	TIIF	
TSC	♦VALG	

TYPE No.	MFRS	Pg&Line
1N4155	IDC	286- 8
SCN	SSI	
1N4156	♦△GESY	248- 42
APD	CODI	
EAS	IDC	
ITT	QUA	
SCN	UPI	
1N4157	♦△GESY	248- 45
CODI	EAS	
IDC	ITT	
QUA	SCN	
	UPI	
1N4158	CODI	177-152
DIC	GSE	
IDC	MSC	
SAR	SCN	
SDI	SOIF	
	UNI	
1N4158A	CODI	177-153
DIC	GSE	
IDC	MSC	
SAR	SDI	
SOIF	UNI	
1N4158B	CODI	177-154
DIC	GSE	
IDC	MSC	
SAR	SDI	
SOIF	UNI	
1N4159	CODI	180- 20
DIC	GSE	
IDC	MSC	
SAR	SCN	
SDI	SOIF	
	UNI	
1N4159A	CODI	180- 21
DIC	GSE	
IDC	MSC	
SAR	SDI	
SOIF	UNI	
1N4159B	CODI	180- 22
DIC	GSE	
IDC	MSC	
SAR	SDI	
SOIF	UNI	
1N4160	CODI	182- 68
DIC	GSE	
IDC	MSC	
SAR	SCN	
SDI	SOIF	
	UNI	
1N4160A	CODI	182- 69
DIC	GSE	
IDC	MSC	
SAR	SDI	
SOIF	UNI	
1N4160B	CODI	182- 70
DIC	GSE	
IDC	MSC	
SAR	SDI	
SOIF	UNI	
1N4161	CODI	186- 2
DIC	GSE	
IDC	MSC	
SAR	SCN	
SDI	SOIF	
	UNI	
1N4161A	CODI	186- 3
DIC	GSE	
IDC	MSC	
SAR	SDI	
SOIF	UNI	
1N4161B	CODI	186- 4
DIC	GSE	
IDC	MSC	
SAR	SDI	
SOIF	UNI	
1N4162	CODI	188- 76
DIC	GICI	
GSE	IDC	
MSC	SAR	
SCN	SDI	
SOIF	UNI	
1N4162A	CODI	188- 77
DIC	GICI	
GSE	IDC	
MSC	SAR	
SDI	SOIF	
	UNI	
1N4162B	CODI	188- 78
DIC	GICI	
GSE	IDC	
MSC	SAR	
SDI	SOIF	
	UNI	
1N4163	CODI	190- 70
DIC	GICI	
GSE	IDC	
MSC	SAR	
SCN	SDI	
SOIF	UNI	
1N4163A	CODI	190- 71
DIC	GICI	
GSE	IDC	
MSC	SAR	
SDI	SOIF	
	UNI	
1N4163B	CODI	190- 72
DIC	GICI	
GSE	IDC	
MSC	SAR	
SDI	SOIF	
	UNI	
1N4164	CODI	192-145

cont next page

△-Registered with JEDEC by this manufacturer

♦-Copy of mfr's data sheet may be ordered from D.A.T.A.

1. TYPE No. CROSS INDEX

IN TYPE NUMBER SEQUENCE

TYPE No.	MFRS	Pg&Line
1N4164 (cont)	DIC	
	GICI	
	GSE	
	IDC	
	MSC	
	SAR	
	SCN	
	SDI	
	SOIF	
	UNI	
1N4164A	CODI	192-146
	DIC	
	GICI	
	GSE	
	IDC	
	MSC	
	SAR	
	SDI	
	SOIF	
	UNI	
1N4164B	CODI	192-147
	DIC	
	GICI	
	GSE	
	IDC	
	MSC	
	SAR	
	SDI	
	SOIF	
	UNI	
1N4165	CODI	195- 9
	DIC	
	GICI	
	GSE	
	IDC	
	MSC	
	SAR	
	SCN	
	SDI	
	SOIF	
	UNI	
1N4165A	CODI	195- 10
	DIC	
	GICI	
	GSE	
	IDC	
	MSC	
	SAR	
	SDI	
	SOIF	
	UNI	
1N4165B	CODI	195- 11
	DIC	
	GICI	
	GSE	
	IDC	
	MSC	
	SAR	
	SDI	
	SOIF	
	UNI	
1N4166	CODI	197-161
	DIC	
	GICI	
	GSE	
	IDC	
	MSC	
	SAR	
	SCN	
	SDI	
	SOIF	
	UNI	
1N4166A	CODI	197-162
	DIC	
	GICI	
	GSE	
	IDC	
	MSC	
	SAR	
	SCN	
	SDI	
	SOIF	
	UNI	
1N4166B	CODI	197-163
	DIC	
	GICI	
	GSE	
	IDC	
	MSC	
	SAR	
	SCN	
	SDI	
	SOIF	
	UNI	
1N4167	CODI	199-149
	DIC	
	GICI	
	GSE	
	IDC	
	MSC	
	SAR	
	SCN	
	SDI	
	SOIF	
	UNI	
1N4167A	CODI	199-150
	DIC	
	GICI	
	GSE	
	IDC	
	MSC	
	SAR	
	SDI	
	SOIF	
	UNI	
1N4167B	CODI	199-151
	DIC	
	GICI	
	GSE	
	IDC	
	MSC	
	SAR	
	SDI	
	SOIF	
	UNI	
1N4168	CODI	202- 69
	DIC	
	GICI	
	GSE	
	IDC	
	MSC	
	SAR	
	SCN	
	SDI	
	SOIF	
	UNI	
1N4168A	CODI	202- 70
	DIC	
	GICI	
	GSE	
	IDC	
	MSC	
	SAR	
	SDI	
	SOIF	
	UNI	
1N4168B	CODI	202- 71
	DIC	
	GICI	
	GSE	
	IDC	
	MSC	
	SAR	
	SDI	
	SOIF	
	UNI	
1N4169	CODI	205- 18
	DIC	
	GSE	
	IDC	
	MSC	
	SAR	
	SCN	
	SDI	
	SOIF	
	UNI	
1N4169A	CODI	205- 19
	DIC	
	GICI	
	GSE	
	IDC	
	MSC	
	SAR	
	SDI	
	SOIF	
	UNI	
1N4169B	CODI	205- 20
	DIC	
	GICI	
	GSE	
	IDC	
	MSC	
	SAR	
	SDI	
	SOIF	
	UNI	
1N4170	CODI	206-181
	DIC	
	GICI	
	GSE	
	IDC	
	MSC	
	SAR	

cont next col

TYPE No.	MFRS	Pg&Line
1N4170 (cont)	SCN	
	SDI	
	SOIF	
	UNI	
1N4170A	CODI	206-182
	DIC	
	GICI	
	GSE	
	IDC	
	MSC	
	SAR	
	SDI	
	SOIF	
	UNI	
1N4170B	CODI	206-183
	DIC	
	GICI	
	GSE	
	IDC	
	MSC	
	SAR	
	SDI	
	SOIF	
	UNI	
1N4171	CODI	208-167
	DIC	
	GICI	
	GSE	
	IDC	
	MSC	
	SAR	
	SCN	
	SDI	
	SOIF	
	UNI	
1N4171A	CODI	208-168
	DIC	
	GICI	
	GSE	
	IDC	
	MSC	
	SAR	
	SDI	
	SOIF	
	UNI	
1N4171B	CODI	208-169
	DIC	
	GICI	
	GSE	
	IDC	
	MSC	
	SAR	
	SDI	
	SOIF	
	UNI	
1N4172	CODI	211- 60
	DIC	
	GICI	
	GSE	
	IDC	
	MSC	
	SAR	
	SCN	
	SDI	
	SOIF	
	UNI	
1N4172A	CODI	211- 61
	DIC	
	GICI	
	GSE	
	IDC	
	MSC	
	SAR	
	SDI	
	SOIF	
	UNI	
1N4172B	CODI	211- 62
	DIC	
	GICI	
	GSE	
	IDC	
	MSC	
	SAR	
	SDI	
	SOIF	
	UNI	
1N4173	CODI	213- 64
	DIC	
	GICI	
	GSE	
	IDC	
	MSC	
	SAR	
	SCN	
	SDI	
	SOIF	
	UNI	
1N4173A	CODI	213- 65
	DIC	
	GICI	
	GSE	
	IDC	
	MSC	
	SAR	
	SDI	
	SOIF	
	UNI	
1N4173B	CODI	213- 66
	DIC	
	GICI	
	GSE	
	IDC	
	MSC	
	SAR	
	SDI	
	SOIF	
	UNI	
1N4174	DIC	215- 29
	GICI	
	GSE	
	IDC	
	MSC	
	SAR	
	SCN	
	SDI	
	SOIF	
	UNI	
1N4174A	DIC	215- 30
	GICI	
	GSE	
	IDC	
	MSC	
	SAR	
	SDI	
	SOIF	
	UNI	
1N4174B	DIC	215- 31
	GICI	
	GSE	
	IDC	
	MSC	
	SAR	
	SDI	
	SOIF	
	UNI	
1N4175	DIC	216-139
	GICI	
	GSE	
	IDC	
	MSC	
	SAR	
	SCN	
	SDI	
	SOIF	
	UNI	
1N4175A	DIC	216-140
	GICI	
	GSE	
	IDC	
	MSC	
	SAR	
	SDI	
	SOIF	
	UNI	
1N4175B	DIC	216-141
	GICI	
	GSE	
	IDC	
	MSC	
	SAR	
	SDI	
	SOIF	
	UNI	
1N4176	DIC	218- 38
	GICI	
	GSE	
	IDC	
	MSC	
	SAR	
	SCN	
	SDI	
	SOIF	
	UNI	
1N4176A	DIC	218- 39
	GICI	
	GSE	
	IDC	
	MSC	
	SAR	
	SDI	
	SOIF	
	UNI	

TYPE No.	MFRS	Pg&Line
1N4176B	DIC	218- 40
	GICI	
	GSE	
	IDC	
	MSC	
	SAR	
	SDI	
	SOIF	
	UNI	
1N4177	DIC	169-151
	GICI	
	GSE	
	IDC	
	MSC	
	SAR	
	SCN	
	SDI	
	SOIF	
	UNI	
1N4177A	DIC	169-152
	GICI	
	GSE	
	IDC	
	MSC	
	SAR	
	SDI	
	SOIF	
	UNI	
1N4177B	DIC	169-153
	GICI	
	GSE	
	IDC	
	MSC	
	SAR	
	SDI	
	SOIF	
	UNI	
1N4178	DIC	221- 54
	GICI	
	GSE	
	IDC	
	MSC	
	SAR	
	SCN	
	SDI	
	SOIF	
	UNI	
1N4178A	DIC	221- 55
	GICI	
	GSE	
	IDC	
	MSC	
	SAR	
	SDI	
	SOIF	
	UNI	
1N4178B	DIC	221- 56
	GICI	
	GSE	
	IDC	
	MSC	
	SAR	
	SDI	
	SOIF	
	UNI	
1N4179	DIC	223- 8
	GICI	
	GSE	
	IDC	
	MSC	
	SAR	
	SCN	
	SDI	
	SOIF	
	UNI	
1N4179A	DIC	223- 9
	GICI	
	GSE	
	IDC	
	MSC	
	SAR	
	SDI	
	SOIF	
	UNI	
1N4179B	DIC	223- 10
	GICI	
	GSE	
	IDC	
	MSC	
	SAR	
	SDI	
	SOIF	
	UNI	
1N4180	DIC	224- 83
	GICI	
	GSE	
	IDC	
	MSC	
	SAR	
	SCN	
	SDI	
	SOIF	
	UNI	
1N4180A	DIC	224- 84
	GICI	
	GSE	
	IDC	
	MSC	
	SAR	
	SDI	
	SOIF	
	UNI	
1N4180B	DIC	224- 85
	GICI	
	GSE	
	IDC	
	MSC	
	SAR	
	SDI	
	SOIF	
	UNI	
1N4181	DIC	226- 36
	GICI	
	GSE	
	IDC	
	MSC	
	SAR	
	SCN	
	SDI	
	SOIF	
	UNI	
1N4181A	DIC	226- 37
	GICI	
	GSE	
	IDC	
	MSC	
	SAR	
	SDI	
	SOIF	
	UNI	
1N4181B	DIC	226- 38
	GICI	
	GSE	
	IDC	
	MSC	
	SAR	
	SDI	
	SOIF	
	UNI	
1N4182	DIC	227- 92
	GICI	
	GSE	
	IDC	
	MSC	
	SAR	
	SCN	
	SDI	
	SOIF	
	UNI	
1N4182A	DIC	227- 93
	GICI	
	GSE	
	IDC	
	MSC	
	SAR	
	SDI	
	SOIF	
	UNI	
1N4182B	DIC	227- 94
	GICI	
	GSE	
	IDC	
	MSC	
	SAR	
	SDI	
	SOIF	
	UNI	
1N4183	DIC	229- 8
	GICI	
	GSE	
	IDC	
	MSC	
	SAR	
	SCN	
	SDI	
	SOIF	
	UNI	
1N4183A	DIC	229- 9
	GICI	
	GSE	
	IDC	
	MSC	
	SAR	
	SDI	
	SOIF	
	UNI	
1N4183B	DIC	229- 10

cont.next col

TYPE No	MFRS	Pg&Line
1N4183B (cont)	GICI	
	GSE	
	IDC	
	MSC	
	SAR	
	SDI	
	SOIF	
	UNI	
1N4184	DIC	230- 88
	GICI	
	GSE	
	IDC	
	MSC	
	SAR	
	SCN	
	SDI	
	SOIF	
	UNI	
1N4184A	DIC	230- 89
	GSE	
	IDC	
	MSC	
	SAR	
	SDI	
	SOIF	
	UNI	
1N4184B	DIC	230- 90
	GICI	
	GSE	
	IDC	
	MSC	
	SAR	
	SDI	
	SOIF	
	UNI	
1N4185	DIC	232- 29
	GICI	
	GSE	
	IDC	
	MSC	
	SAR	
	SCN	
	SDI	
	SOIF	
	UNI	
1N4185A	DIC	232- 30
	GICI	
	GSE	
	IDC	
	MSC	
	SAR	
	SDI	
	SOIF	
	UNI	
1N4185B	DIC	232- 31
	GICI	
	GSE	
	IDC	
	MSC	
	SAR	
	SDI	
	SOIF	
	UNI	
1N4186	DIC	233- 67
	GICI	
	GSE	
	IDC	
	MSC	
	SAR	
	SCN	
	SDI	
	SOIF	
	UNI	
1N4186A	DIC	233- 68
	GICI	
	GSE	
	IDC	
	MSC	
	SAR	
	SDI	
	SOIF	
	UNI	
1N4186B	DIC	233- 69
	GICI	
	GSE	
	IDC	
	MSC	
	SAR	
	SDI	
	SOIF	
	UNI	
1N4187	DIC	235- 37
	GICI	
	GSE	
	IDC	
	MSC	
	SAR	
	SCN	
	SDI	
	SOIF	
	UNI	
1N4187A	DIC	235- 38
	GICI	
	GSE	
	IDC	
	MSC	
	SAR	
	SDI	
	SOIF	
	UNI	
1N4187B	DIC	235- 39
	GICI	
	GSE	
	IDC	
	MSC	
	SAR	
	SDI	
	SOIF	
	UNI	
1N4188	DIC	236- 61
	GICI	
	GSE	
	IDC	
	MSC	
	SAR	
	SCN	
	SDI	
	SOIF	
	UNI	
1N4188A	DIC	236- 62
	GICI	
	GSE	
	IDC	
	MSC	
	SAR	
	SDI	
	SOIF	
	UNI	
1N4188B	DIC	236- 63
	GICI	
	GSE	
	IDC	
	MSC	
	SAR	
	SDI	
	SOIF	
	UNI	
1N4189	DIC	237-100
	GICI	
	GSE	
	IDC	
	MSC	
	SAR	
	SCN	
	SDI	
	SOIF	
	UNI	
1N4189A	DIC	237-101
	GICI	
	GSE	
	IDC	
	MSC	
	SAR	
	SDI	
	SOIF	
	UNI	
1N4189B	DIC	237-102
	GICI	
	GSE	
	IDC	
	MSC	
	SAR	
	SDI	
	SOIF	
	UNI	
1N4190	DIC	239- 75
	GICI	
	GSE	
	IDC	
	MSC	
	SAR	
	SCN	
	SDI	
	SOIF	
	UNI	
1N4190A	DIC	239- 76
	GICI	
	GSE	
	IDC	
	MSC	
	SAR	
	SDI	
	SOIF	
	UNI	

TYPE No.	MFRS	Pg&Line
1N4190B	DIC	239- 77
	GICI	
	GSE	
	IDC	
	MSC	
	SAR	
	SDI	
	SOIF	
	UNI	
1N4191	DIC	240-105
	GICI	
	GSE	
	IDC	
	MSC	
	SAR	
	SCN	
	SDI	
	SOIF	
	UNI	
1N4191A	DIC	240-106
	GICI	
	GSE	
	IDC	
	MSC	
	SAR	
	SDI	
	SOIF	
	UNI	
1N4191B	DIC	240-107
	GICI	
	GSE	
	IDC	
	MSC	
	SAR	
	SDI	
	SOIF	
	UNI	
1N4192	DIC	242- 43
	GICI	
	GSE	
	IDC	
	MSC	
	SAR	
	SCN	
	SDI	
	SOIF	
	UNI	
1N4192A	DIC	242- 44
	GICI	
	GSE	
	IDC	
	MSC	
	SAR	
	SDI	
	SOIF	
	UNI	
1N4192B	DIC	242- 45
	GICI	
	GSE	
	IDC	
	MSC	
	SAR	
	SDI	
	SOIF	
	UNI	
1N4193	DIC	243- 83
	GICI	
	GSE	
	IDC	
	MSC	
	SAR	
	SCN	
	SDI	
	UNI	
1N4193A	DIC	243- 84
	GICI	
	GSE	
	IDC	
	MSC	
	SAR	
	SDI	
	UNI	
1N4193B	DIC	243- 85
	GICI	
	GSE	
	IDC	
	MSC	
	SAR	
	SDI	
	UNI	
1N4240	♦DIC	171- 84
	GSE	
	IDC	
	SDI	
1N4241	♦DIC	174- 22
	GSE	
	IDC	
	SDI	
1N4242	BNT	268- 93
	IDC	
	ITT	
1N4243	IDC	268- 94
	ITT	
1N4244	♦△FSC	265- 61
	ESMF	
	IDC	
	MISI	
	NPC	
1N4245	△SET	311-107
	CRL	
	DII	
	EDI	
	EDL	
	♦GESY	♦GIC
	IDC	
	MSC	
	QUA	
	SCN	
	SEN	
	SOD	
	SSI	
	UNI	
	UPI	
JAN1N4245	GESY	283- 59
	MSC	
	SET	
	SOD	
	UNI	
1N4246	△SET	330- 88
	CRL	
	DII	
	EDI	
	EDL	
	♦GESY	♦GIC
	IDC	
	MSC	
	QUA	
	SCN	
	SEN	
	SOD	
	SSI	
	UNI	
	UPI	
JAN1N4246	GESY	286- 2
	MSC	
	SET	
	SOD	
	UNI	
1N4247	△SET	348- 7
	CRL	
	DII	
	EDI	
	EDL	
	♦GESY	♦GIC
	IDC	
	MSC	
	QUA	
	SCN	
	SEN	
	SOD	
	SSI	
	UNI	
JAN1N4247	GESY	287- 63
	GIC	
	MSC	
	SET	
	SOD	
	UNI	
1N4248	△SET	360- 95
	DII	
	EDI	
	EDL	
	ETC	
	♦GESY	♦GIC
	IDC	
	MSC	
	QUA	
	SCN	
	SEN	
	SOD	
	SSI	
	UNI	
JAN1N4248	MSC	288- 5
	SET	
	SOD	
1N4249	△SET	371- 20
	DII	
	EDI	

cont next page

△-Registered with JEDEC by this manufacturer

♦-Copy of mfr's data sheet may be ordered from D.A.T.A.

1. TYPE No. CROSS INDEX

IN TYPE NUMBER SEQUENCE

TYPE No.	MFRS	Pg&Line
1N4249 (cont)	EDL	
	♦GESY	♦GIC
	IDC	MSC
	QUA	SCN
	SEN	SOD
	SSI	TRW
		UNI
JAN1N4249	MSC	288 - 63
	SET	SOD
1N4250	△SET	359 - 57
	CODI	ETC
	GIC	IDC
	QUA	SCN
	SOD	SSI
1N4251	△SET	370 - 1
	CODI	ETC
	GIC	IDC
	QUA	SCN
	SOD	SSI
1N4252	△SET	377 - 85
	CODI	GIC
	IDC	QUA
	SCN	SOD
		SSI
1N4253	△SET	384 - 34
	CODI	GIC
	IDC	QUA
	SCN	SOD
		SSI
1N4254	△SET	384 - 35
	DII	GIC
	IDC	QUA
	SCN	SCO
	SOD	SSI
1N4255	△SET	389 - 84
	DII	GIC
	IDC	SCN
	SCO	SOD
		SSI
1N4256	△SET	392 - 42
	DII	GIC
	IDC	SCO
	SOD	SSI
1N4257	△SET	394 - 23
	DII	GIC
	IDC	SCN
	SCO	SOD
		SSI
1N4258	△TNC	178-123
	DIC	SCN
1N4258A	△TNC	178-124
		DIC
1N4258B	△TNC	178-125
		DIC
JAN1N4258B	none	178-126
1N4259	△TNC	180-166
	DIC	SCN
1N4259A	△TNC	180-167
		DIC
1N4259B	△TNC	180-168
		DIC
JAN1N4259B	none	180-169
1N4260	△TNC	183 - 35
	DIC	SCN
1N4260A	△TNC	183 - 36
		DIC
1N4260B	△TNC	183 - 37
		DIC
JAN1N4260B	none	183 - 38
1N4261	△TNC	186-147
	DIC	SCN
1N4261A	△TNC	186-148
		DIC
1N4261B	△TNC	186-149
		DIC
JAN1N4261B	none	186-150
1N4262	△TNC	189 - 54
	DIC	IDC
		SCN
1N4262A	△TNC	189 - 55
	DIC	IDC
1N4262B	△TNC	189 - 56
	DIC	IDC
JAN1N4262B	none	189 - 57
1N4263	△TNC	191 - 30
	DIC	SCN
1N4263A	△TNC	191 - 31
		DIC
1N4263B	△TNC	191 - 32
		DIC
JAN1N4263B	none	191 - 33
1N4264	△TNC	193-144
	DIC	SCN
1N4264A	△TNC	193-145
		DIC
1N4264B	△TNC	193-146
		DIC
JAN1N4264B	none	193-147
1N4265	△TNC	195-163
	DIC	SCN
1N4265A	△TNC	195-164
		DIC
1N4265B	△TNC	195-165
		DIC
JAN1N4265B	none	195-166
1N4266	△TNC	198-145
	DIC	IDC
		SCN
1N4266A	△TNC	198-146
	DIC	IDC
1N4266B	△TNC	198-147
	DIC	IDC
JAN1N4266B	none	198-148
1N4267	△TNC	200-102
	DIC	IDC
		SCN
1N4267A	△TNC	200-103
	DIC	IDC
1N4267B	△TNC	200-104
	DIC	IDC
JAN1N4267B	none	200-105
1N4268	△TNC	203 - 37
	DIC	IDC
		SCN
1N4268A	△TNC	203 - 38
	DIC	IDC
1N4268B	△TNC	203 - 39
	DIC	IDC
JAN1N4268B	none	203 - 40
1N4269	△TNC	205-170
	DIC	IDC
		SCN
1N4269A	△TNC	205-171
	DIC	IDC
1N4269B	△TNC	205-172
	DIC	IDC
JAN1N4269B	none	205-173
1N4270	△TNC	207-160
	DIC	SCN
1N4270A	△TNC	207-161
		DIC
1N4270B	△TNC	207-162
		DIC
JAN1N4270B	none	207-163
1N4271	△TNC	209-130
	DIC	IDC
		SCN
1N4271A	△TNC	209-131
	DIC	IDC
1N4271B	△TNC	209-132
	DIC	IDC
JAN1N4271B	none	209-133
1N4272	△TNC	212 - 30
	DIC	SCN
1N4272A	△TNC	212 - 31
		DIC
1N4272B	△TNC	212 - 32
		DIC
JAN1N4272B	none	212 - 33
1N4273	△TNC	214 - 29
	DIC	SCN
1N4273A	△TNC	214 - 30
		DIC
1N4273B	△TNC	214 - 31
		DIC
JAN1N4273B	none	214 - 32
1N4274	△TNC	215-188
	DIC	SCN
1N4274A	△TNC	215-189
		DIC
1N4274B	△TNC	215-190
		DIC
JAN1N4274B	none	215-191
1N4275	△TNC	217 - 78
	DIC	SCN
1N4275A	△TNC	217 - 79
		DIC
1N4275B	△TNC	217 - 80
		DIC
JAN1N4275B	none	217 - 81
1N4276	△TNC	218-150
	DIC	SCN
1N4276A	△TNC	218-151
		DIC
1N4276B	△TNC	218-152
		DIC
JAN1N4276B	none	218-153
1N4277	△TNC	220 - 39
	DIC	SCN
1N4277A	△TNC	220 - 40
		DIC
1N4277B	△TNC	220 - 41
		DIC
JAN1N4277B	none	220 - 42
1N4278	△TNC	221-173
	DIC	SCN
1N4278A	△TNC	221-174
		DIC
1N4278B	△TNC	221-175
		DIC
JAN1N4278B	none	221-176
1N4279	△TNC	223-110
	DIC	SCN
1N4279A	△TNC	223-111
		DIC
1N4279B	△TNC	223-112
		DIC
JAN1N4279B	none	223-113
1N4280	△TNC	225 - 30
	DIC	SCN
1N4280A	△TNC	225 - 31
		DIC
1N4280B	△TNC	225 - 32
		DIC
JAN1N4280B	none	225 - 33
1N4281	△TNC	226-142
	DIC	SCN
1N4281A	△TNC	226-143
		DIC
1N4281B	△TNC	226-144
		DIC
JAN1N4281B	none	226-145
1N4282	△TNC	228 - 27
	DIC	SCN
1N4282A	△TNC	228 - 28
		DIC
1N4282B	△TNC	228 - 29
		DIC
JAN1N4282B	none	228 - 30
1N4283	△TNC	229-126
	DIC	SCN
1N4283A	△TNC	229-127
		DIC
1N4283B	△TNC	229-128
		DIC
JAN1N4283B	none	229-129
1N4284	△TNC	231 - 16
	DIC	SCN
1N4284A	△TNC	231 - 17
		DIC
1N4284B	△TNC	231 - 18
		DIC
JAN1N4284B	none	231 - 19
1N4285	△TNC	232-126
	DIC	SCN
1N4285A	△TNC	232-127
		DIC
1N4285B	△TNC	232-128
		DIC
JAN1N4285B	none	232-129
1N4286	△TNC	234 - 18
	DIC	SCN
1N4286A	△TNC	234 - 19
		DIC
1N4286B	△TNC	234 - 20
		DIC
JAN1N4286B	none	234 - 21
1N4287	△TNC	235-138
	DIC	SCN
1N4287A	△TNC	235-139
		DIC
1N4287B	△TNC	235-140
		DIC
JAN1N4287B	none	235-141
1N4288	△TNC	237 - 2
	DIC	SCN
1N4288A	△TNC	237 - 3
		DIC
1N4288B	△TNC	237 - 4
		DIC
JAN1N4288B	none	237 - 5
1N4289	△TNC	238 - 29
	DIC	SCN
1N4289A	△TNC	238 - 30
		DIC
1N4289B	△TNC	238 - 31
		DIC
JAN1N4289B	none	238 - 32
1N4290	△TNC	240 - 16
	DIC	SCN
1N4290A	△TNC	240 - 17
		DIC
1N4290B	△TNC	240 - 18
		DIC
JAN1N4290B	none	240 - 19
1N4291	△TNC	241 - 24
	DIC	SCN
1N4291A	△TNC	241 - 25
		DIC
1N4291B	△TNC	241 - 26
		DIC
JAN1N4291B	none	241 - 27
1N4292	△TNC	242-142
	DIC	SCN
1N4292A	△TNC	242-143
		DIC
1N4292B	△TNC	242-144
		DIC
JAN1N4292B	none	242-145
1N4293	△TNC	244 - 4
	DIC	SCN
1N4293A	△TNC	244 - 5
		DIC
1N4293B	△TNC	244 - 6
		DIC
JAN1N4293B	none	244 - 7
1N4294	△MIC	510 - 85
		ALP
1N4295,A	♦△DIC	187-126
	CODI	CRL
	GSE	IDC
	MSC	TNC
		USS
1N4296,A	♦△DIC	188 - 79
	CODI	CRL
	♦GIC	GSE
	IDC	MSC
	TNC	USS
1N4297	♦△DIC	184 - 72
	GSE	IDC
		♦MSC
1N4297A	♦△DIC	184 - 73
	GSE	IDC
		♦MSC
1N4297B	♦△DIC	184 - 74
	GSE	IDC
		♦MSC
1N4298	♦△DIC	184 - 75
	GSE	IDC
		♦MSC
1N4298A	♦△DIC	184 - 76
	GSE	IDC
		♦MSC
1N4298B	♦△DIC	184 - 77
	GSE	IDC
		♦MSC
1N4299	♦△DIC	191 - 70
	GSE	IDC
1N4299A	♦△DIC	191 - 71
	GSE	IDC
1N4299B	♦△DIC	191 - 72
	GSE	IDC
1N4300	♦△DIC	191 - 73
	GSE	IDC
1N4300A	♦△DIC	191 - 74
	GSE	IDC
1N4300B	♦△DIC	191 - 75
	GSE	IDC
1N4301	♦△DIC	184 - 78
	GSE	IDC
		♦MSC
1N4301A	♦△DIC	184 - 79
	GSE	IDC
		♦MSC
1N4301B	♦△DIC	184 - 80
	GSE	IDC
		♦MSC
1N4302	♦△DIC	184 - 81
	GSE	IDC
		♦MSC
1N4302A	♦△DIC	184 - 82
	GSE	IDC
		♦MSC
1N4302B	♦△DIC	184 - 83
	GSE	IDC
		♦MSC
1N4303	♦△DIC	191 - 76
	GSE	IDC
1N4303A	♦△DIC	191 - 77
	GSE	IDC
1N4303B	♦△DIC	191 - 78
	GSE	IDC
1N4304	♦△DIC	191 - 79
	GSE	IDC
1N4304A	♦△DIC	191 - 80
	GSE	IDC
1N4304B	♦△DIC	191 - 81
	GSE	IDC
1N4305	△GESY	275 - 30
	APD	EMLS
	FSC	GIC
	HSC	IDC
	ITT	MSC
	♦NPC	♦QUA
	SDI	SES
	TEC	♦TII
	TIID	TIIF
		TSC
1N4306	△GESY	270 - 2
	BNT	♦FSC
	IDC	SCA
		SSI
JAN1N4306	FSC	270 - 70
		GESY
1N4307	△GESY	270 - 3
	BNT	♦FSC
	IDC	SCA
		SSI
JAN1N4307	FSC	270 - 71
		GESY
1N4308	HSC	276-105
	IDC	RAYN
	SDI	TIID
	♦TIIF	TSC
1N4309	IDC	270 - 4
	TIID	♦TIIF
		TSC
1N4310	IDC	274 - 65
	TIID	♦TIIF
		TSC
1N4311	IDC	276-106
	TIID	♦TIIF
		TSC
1N4312	HSC	280-100
	IDC	RAYN
	SDI	SSI
	TIID	♦TIIF
1N4313	IDC	276 - 24
		SSI
1N4314	IDC	276 - 19
		SSI
1N4315	IDC	268 - 95
		SSI
1N4316	IDC	273 - 29
		SSI
1N4317	IDC	276 - 20
		SSI
1N4318	IDC	280 - 31
		SSI
1N4319	IDC	276 - 25
		SSI
1N4320	MIC	287 - 76
		SSI
1N4321	△UNI	222 - 80
	CRL	MSC
	SSI	TRW
1N4322	FSC	271 - 23
	IDC	MSC
	SSI	TSC
1N4323,A,B	△TNC	177-155
	CODI	GSE
	IDC	MSC
	TSC	UNI
1N4324,A,B	△TNC	180 - 23
	CODI	GSE
	IDC	MSC
	TSC	UNI
1N4325,A,B	△TNC	182 - 71
	CODI	GSE
	IDC	MSC
	TSC	UNI
1N4326,A,B	△TNC	186 - 5
	CODI	GSE
cont next col.		
1N4326,A,B (cont.)	IDC	
	MSC	TSC
		UNI
1N4327,A,B	△TNC	188 - 80
	CODI	GSE
	IDC	MSC
	TSC	UNI
1N4328,A,B	△TNC	190 - 73
	CODI	GSE
	IDC	MSC
	TSC	UNI
1N4329,A,B	△TNC	192-148
	GSE	IDC
	MSC	TSC
		UNI
1N4330,A,B	△TNC	195 - 12
	GSE	IDC
	MSC	TSC
		UNI
1N4331,A,B	△TNC	197-164
	GSE	IDC
	MSC	TSC
		UNI
1N4332,A,B	△TNC	199-152
	GSE	IDC
	MSC	TSC
		UNI
1N4333,A,B	△TNC	202 - 72
	GSE	IDC
	MSC	TSC
		UNI
1N4334,A,B	GSE	205 - 21
	IDC	MSC
	TNC	TSC
		UNI
1N4335,A,B	△TNC	206-184
	GSE	IDC
	MSC	TSC
		UNI
1N4336,A,B	△TNC	208-170
	GSE	IDC
	MSC	TSC
		UNI
1N4337,A,B	△TNC	211 - 63
	GSE	IDC
	MSC	TSC
		UNI
1N4338,A,B	△TNC	213 - 67
	GSE	IDC
	MSC	TSC
		UNI
1N4339,A,B	△TNC	215 - 32
	GSE	IDC
	MSC	TSC
		UNI
1N4340,A,B	△TNC	216-142
	GSE	IDC
	MSC	TSC
		UNI
1N4341,A,B	△TNC	218 - 41
	GSE	IDC
	MSC	TSC
		UNI
1N4342,A,B	△TNC	219-117
	GSE	IDC
	MSC	TSC
		UNI
1N4343,A,B	△TNC	221 - 57
	GSE	IDC
	MSC	TSC
		UNI
1N4344,A,B	△TNC	223 - 11
	GSE	IDC
	MSC	TSC
		UNI
1N4345,A,B	GSE	224 - 86
	IDC	MSC
	TNC	TSC
		UNI
1N4346,A,B	△TNC	226 - 39
	GSE	IDC
	MSC	TSC
		UNI
1N4347,A,B	△TNC	227 - 95
	GSE	IDC
	MSC	TSC
		UNI
1N4348,A,B	△TNC	229 - 11
	GSE	IDC
	MSC	TSC
		UNI
1N4349,A,B	△TNC	230 - 91
	GSE	IDC
	MSC	TSC
		UNI
1N4350,A,B	△TNC	232 - 32
	GSE	IDC
	MSC	TSC
		UNI
1N4351,A,B	△TNC	233 - 70
	GSE	IDC
	MSC	TSC
		UNI
1N4352,A,B	△TNC	235 - 40
	GSE	IDC
	MSC	TSC
		UNI
1N4353,A,B	△TNC	236 - 64
	GSE	IDC
	MSC	TSC
		UNI
1N4354,A,B	△TNC	237-103
cont.next page		

△-Registered with JEDEC by this manufacturer

♦-Copy of mfr's data sheet may be ordered from D.A.T.A.

1. TYPE No. CROSS INDEX

IN TYPE NUMBER SEQUENCE

TYPE No.	MFRS	Pg&Line
1N4354,A,B		
(cont.)	GSE	
IDC	MSC	
TSC	UNI	
1N4355,A,B	△TNC	239- 78
GSE	IDC	
MSC	TSC	
	UNI	
1N4356,A,B	GSE	240-108
IDC	MSC	
TNC	TSC	
	UNI	
1N4357,A,B	△TNC	242- 46
GSE	IDC	
MSC	TSC	
	UNI	
1N4358,A,B	△TNC	243- 86
GSE	IDC	
MSC	TSC	
	UNI	
1N4360	CODI	165-152
♦DIC	GSE	
IDC	MSC	
SSI	TII	
	TSC	
1N4361	ETC	367- 5
IDC	SES	
SOD	SSI	
	TEK	
1N4362	IDC	165- 23
	SSI	
1N4363	△FSC	280- 34
BNT	IDC	
SSI	TSC	
1N4364	ETC	300- 27
♦GIC	IDC	
INRB	INRC	
INRI	INRJ	
SCN	SSI	
TIIB	TIID	
TIIF	UPI	
1N4365	ETC	311- 3
♦GIC	IDC	
INRB	INRC	
INRI	INRJ	
SCN	SSI	
TIIB	TIID	
	TIIF	
1N4366	ETC	321- 34
♦GIC	IDC	
INRB	INRC	
INRI	INRJ	
SCN	SSI	
TIIB	TIID	
TIIF	UPI	
1N4367	ETC	329- 88
♦GIC	IDC	
INRB	INRC	
INRI	INRJ	
SCN	SSI	
TIIB	TIID	
TIIF	UPI	
1N4368	ETC	340- 7
♦GIC	IDC	
INRB	INRC	
INRI	INRJ	
SCN	SSI	
TIIB	TIID	
	TIIF	
1N4369	ETC	347- 9
♦GIC	IDC	
INRB	INRC	
INRI	INRJ	
SCN	SSI	
TIIB	TIID	
	TIIF	
1N4370,A	♦△MOTA	165-161
CODI	♦CRL	
♦DIC	GSE	
IDC	INRB	
INRC	INRI	
INRJ	ITT	
SES	SOD	
TEC	TEK	
TII	TIID	
TIIF	TRW	
TSC	USS	
JAN1N4370A	DIC	165-162
INRC	MOTA	
TII	TRW	
	TSC	
1N4371,A	♦△MOTA	166- 25
CODI	♦CRL	
♦DIC	GSE	
IDC	INRB	
INRC	INRI	
INRJ	ITT	
SES	SOD	
TEC	TEK	
♦TII	TIID	
TIIF	TRW	
TSC	USS	
JAN1N4371A	DIC	166- 26
INRC	MOTA	
TII	TRW	
TSC	USS	
1N4372,A	♦△MOTA	166- 96
CODI	♦CRL	
♦DIC	GSE	
IDC	INRB	
INRC	INRI	
INRJ	ITT	
SES	SOD	

cont.next col

TYPE No.	MFRS	Pg&Line
1N4372,A		
(cont)	TEC	
TEK	♦TII	
TIID	TIIF	
TRW	TSC	
	USS	
JAN1N4372A	DIC	166- 97
INRC	MOTA	
TEC	TII	
TRW	TSC	
	USS	
1N4375	IDC	273- 50
1N4376	♦△FSC	265- 62
IDC	SGSI	
JAN1N4376	FSC	265- 63
1N4377	△SOD	392- 63
	EDI	
1N4379	△MIC	517- 15
	ALP	
1N4380	HSC	269-110
IDC	ITT	
SDI	SES	
	SSI	
1N4381	GELC	266-100
GIC	IDC	
ITT	SSI	
1N4382	TSC	273- 18
1N4383	DII	312- 35
ETC	♦GIC	
GICC	GICI	
INTG	ITT	
QUA	SAR	
SCN	SCO	
SES	SOIF	
TEC	TEK	
TNC	UPI	
JAN1N4383	GIC	311- 86
1N4384	DII	331- 16
ETC	♦GIC	
GICC	GICI	
IDC	INTG	
ITT	QUA	
SAR	SCN	
SCO	SES	
SOIF	TEC	
TEK	TNC	
	UPI	
JAN1N4384	GIC	330- 67
1N4385	DII	348- 38
ETC	♦GIC	
GICC	GICI	
INTG	ITT	
QUA	SAR	
SCN	SCO	
SES	SOIF	
TEC	TEK	
TNC	UPI	
JAN1N4385	GIC	347- 94
JAN1N4386	none	555- 76
1N4387	♦△MOTA	555- 77
JAN1N4387	none	551- 59
1N4388	♦△MOTA	548-101
JAN1N4388	none	544- 17
1N4389	ETC	246- 12
IDC	SOD	
	UPI	
1N4390	IDC	265- 58
SOD	SSI	
1N4391	IDC	265- 59
SOD	SSI	
1N4392	IDC	264- 99
	SOD	
1N4393	♦△CRL	566- 28
	SSI	
1N4393A	♦△CRL	566- 29
	SSI	
1N4393B	♦△CRL	566- 30
	SSI	
1N4394	♦△CRL	566- 48
	SSI	
1N4394A	♦△CRL	566- 49
	SSI	
1N4394B	♦△CRL	566- 50
	SSI	
1N4395	♦△CRL	566- 96
	SSI	
1N4395A	♦△CRL	566- 97
	SSI	
1N4395B	♦△CRL	566- 98
	SSI	
1N4396	♦△CRL	567-104
	SSI	
1N4396A	♦△CRL	566- 31
	SSI	
1N4396B	♦△CRL	566- 32
	SSI	
1N4397	♦△CRL	569- 74
	SSI	
1N4397A	♦△CRL	566- 51
	SSI	
1N4397B	♦△CRL	566- 52
	SSI	
1N4398	♦△CRL	571- 1
	SSI	
1N4398A	♦△CRL	571- 2
	SSI	
1N4398B	♦△CRL	571- 3
	SSI	
1N4399	♦△CRL	572- 31
	SSI	
1N4399A	♦△CRL	572- 32
	SSI	
1N4399B	♦△CRL	572- 33
	SSI	

TYPE No.	MFRS	Pg&Line
1N4400	△DII	177-156
ASC	GSE	
IDC	SCN	
	UNI	
1N4400A	ASC	177-157
DII	GSE	
IDC	UNI	
1N4400B	ASC	177-158
DII	GSE	
IDC	UNI	
1N4401	△DII	180- 24
ASC	GSE	
IDC	SCN	
	UNI	
1N4401A	ASC	180- 25
DII	GSE	
IDC	UNI	
1N4401B	ASC	180- 26
DII	GSE	
IDC	UNI	
1N4402	△DII	182- 72
ASC	GSE	
IDC	SCN	
	UNI	
1N4402A	ASC	182- 73
DII	GSE	
IDC	UNI	
1N4402B	ASC	182- 74
DII	GSE	
IDC	UNI	
1N4403	△DII	186- 6
ASC	GSE	
IDC	SCN	
	UNI	
1N4403A	ASC	186- 7
DII	GSE	
IDC	UNI	
1N4403B	ASC	186- 8
DII	GSE	
IDC	UNI	
1N4404	△DII	188- 81
ASC	GSE	
IDC	SCN	
	UNI	
1N4404A	ASC	188- 82
DII	GSE	
IDC	UNI	
1N4404B	ASC	188- 83
DII	GSE	
IDC	UNI	
1N4405	△DII	190- 74
ASC	GSE	
IDC	SCN	
	UNI	
1N4405A	ASC	190- 75
DII	GSE	
IDC	UNI	
1N4405B	ASC	190- 76
DII	GSE	
IDC	UNI	
1N4406	△DII	192-149
ASC	GSE	
IDC	SCN	
	UNI	
1N4406A	ASC	192-150
DII	GSE	
IDC	UNI	
1N4406B	ASC	192-151
DII	GSE	
IDC	UNI	
1N4407	△DII	195- 13
ASC	GSE	
IDC	SCN	
	UNI	
1N4407A	ASC	195- 14
DII	GSE	
IDC	UNI	
1N4407B	ASC	195- 15
DII	GSE	
IDC	UNI	
1N4408	△DII	197-165
ASC	GSE	
IDC	SCN	
	UNI	
1N4408A	ASC	197-166
DII	GSE	
IDC	UNI	
1N4408B	ASC	197-167
DII	GSE	
IDC	UNI	
1N4409	△DII	199-153
	IDC	
1N4410	△DII	202- 73
ASC	GSE	
IDC	SCN	
	UNI	
1N4410A	ASC	202- 74
DII	GSE	
IDC	UNI	
1N4410B	ASC	202- 75
DII	GSE	
IDC	UNI	
1N4411	△DII	205- 22
ASC	GSE	
IDC	SCN	
	UNI	
1N4411A	ASC	205- 23
DII	GSE	
IDC	UNI	
1N4411B	ASC	205- 24
DII	GSE	
IDC	UNI	
1N4412	△DII	207- 1

cont.next col

TYPE No	MFRS	Pg&Line
1N4412		
(cont)	ASC	
GSE	IDC	
SCN	UNI	
1N4412A	ASC	207- 2
DII	GSE	
IDC	UNI	
1N4412B	ASC	207- 3
DII	GSE	
IDC	UNI	
1N4413	△DII	208-171
ASC	GSE	
IDC	SCN	
	UNI	
1N4413A	ASC	208-172
DII	GSE	
IDC	UNI	
1N4413B	ASC	208-173
DII	GSE	
IDC	UNI	
1N4414	△DII	211- 64
ASC	GSE	
IDC	SCN	
	UNI	
1N4414A	ASC	211- 65
DII	GSE	
IDC	UNI	
1N4414B	ASC	211- 66
DII	GSE	
IDC	UNI	
1N4415	△DII	213- 68
	IDC	
1N4416	△DII	215- 33
ASC	GSE	
IDC	SCN	
	UNI	
1N4416A	ASC	215- 34
DII	GSE	
IDC	UNI	
1N4416B	ASC	215- 35
DII	GSE	
IDC	UNI	
1N4417	△DII	216-143
ASC	GSE	
IDC	SCN	
	UNI	
1N4417A	ASC	216-144
DII	GSE	
IDC	UNI	
1N4417B	ASC	216-145
DII	GSE	
IDC	UNI	
1N4418	△DII	218- 42
ASC	GSE	
IDC	SCN	
	UNI	
1N4418A	ASC	218- 43
DII	GSE	
IDC	UNI	
1N4418B	ASC	218- 44
DII	GSE	
IDC	UNI	
1N4419	△DII	219-118
ASC	GSE	
IDC	SCN	
	UNI	
1N4419A	ASC	219-119
DII	GSE	
IDC	UNI	
1N4419B	ASC	219-120
DII	GSE	
IDC	UNI	
1N4420	△DII	221- 58
ASC	GSE	
IDC	SCN	
	UNI	
1N4420A	ASC	221- 59
DII	GSE	
IDC	UNI	
1N4420B	ASC	221- 60
DII	GSE	
IDC	UNI	
1N4421	△DII	223- 12
	IDC	
1N4422	△DII	224- 87
ASC	GSE	
IDC	SCN	
	UNI	
1N4422A	ASC	224- 88
DII	GSE	
IDC	UNI	
1N4422B	ASC	224- 89
DII	GSE	
IDC	UNI	
1N4423	△DII	226- 40
ASC	GSE	
IDC	SCN	
	UNI	
1N4423A	ASC	226- 41
DII	GSE	
IDC	UNI	
1N4423B	ASC	226- 42
DII	GSE	
IDC	UNI	
1N4424	△DII	227- 96
ASC	GSE	
IDC	SCN	
	UNI	
1N4424A	ASC	227- 97
DII	GSE	
IDC	UNI	
1N4424B	ASC	227- 98
DII	GSE	
IDC	UNI	

TYPE No.	MFRS	Pg&Line
1N4425	△DII	229- 12
ASC	GSE	
IDC	SCN	
	UNI	
1N4425A	ASC	229- 13
DII	GSE	
IDC	UNI	
1N4425B	ASC	229- 14
DII	GSE	
IDC	UNI	
1N4426	△DII	230- 92
ASC	GSE	
IDC	SCN	
	UNI	
1N4426A	ASC	230- 93
DII	GSE	
IDC	UNI	
1N4426B	ASC	230- 94
DII	GSE	
IDC	UNI	
1N4427	△DII	232- 33
IDC	SCN	
1N4428	△DII	233- 71
ASC	GSE	
IDC	SCN	
	UNI	
1N4428A	ASC	233- 72
DII	GSE	
IDC	UNI	
1N4428B	ASC	233- 73
DII	GSE	
IDC	UNI	
1N4429	△DII	235- 41
ASC	GSE	
IDC	SCN	
	UNI	
1N4429A	ASC	235- 42
DII	GSE	
IDC	UNI	
1N4429B	ASC	235- 43
DII	GSE	
IDC	UNI	
1N4430	△DII	236- 65
ASC	GSE	
IDC	SCN	
	UNI	
1N4430A	ASC	236- 66
DII	GSE	
IDC	UNI	
1N4430B	ASC	236- 67
DII	GSE	
IDC	UNI	
1N4431	△DII	237-104
ASC	GSE	
IDC	SCN	
	UNI	
1N4431A	ASC	237-105
DII	GSE	
IDC	UNI	
1N4431B	ASC	237-106
DII	GSE	
IDC	UNI	
1N4432	△DII	239- 79
ASC	GSE	
IDC	SCN	
	UNI	
1N4432A	ASC	239- 80
DII	GSE	
IDC	UNI	
1N4432B	ASC	239- 81
DII	GSE	
IDC	UNI	
1N4433	△DII	240-109
	IDC	
1N4434	△DII	242- 47
ASC	GSE	
IDC	SCN	
	UNI	
1N4434A	ASC	242- 48
DII	GSE	
IDC	UNI	
1N4434B	ASC	242- 49
DII	GSE	
IDC	UNI	
1N4435	△DII	243- 87
ASC	GSE	
IDC	SCN	
	UNI	
1N4435A	ASC	243- 88
DII	GSE	
IDC	UNI	
1N4435B	ASC	243- 89
DII	GSE	
IDC	UNI	
1N4436	♦△VARO	315- 30
1N4437	♦△VARO	334- 29
1N4438	♦△VARO	351- 42
1N4439	△VARO	363- 84
1N4440	△VARO	373- 67
1N4441	♦△VARO	288- 91
1N4444	△GESY	274- 37
GIC	HSC	
IDC	ITT	
SDI	SES	
♦TII	TIID	
TIIF	TSC	
1N4446	△GESY	275- 31
APD	APX	
BNT	♦ESMF	
FSC	GIC	
IDC	INTG	
ITT	♦ITTB	
MISI	MSC	

cont.next page

△-Registered with JEDEC by this manufacturer

♦-Copy of mfr's data sheet may be ordered from D.A.T.A.

1. TYPE No. CROSS INDEX

IN TYPE NUMBER SEQUENCE

TYPE No.	MFRS	Pg&Line
1N4446		
(cont)	♦MULB	
	♦NPC	
	♦PHIC	
	QUA	
	♦RADF	
	SDI	
	SES	
	TEC	
	♦TFKG	
	♦TII	
	TIID	
	TIIF	
	TSC	
	♦VALG	
	♦WAB	
1N4447	△GESY	275 - 32
	APD	
	BNT	
	EMLS	
	ESMF	
	FSC	
	GIC	
	IDC	
	ITT	
	♦ITTB	
	MISI	
	MSC	
	♦MULB	
	♦NPC	
	QUA	
	SDI	
	SES	
	TEC	
	♦TFKG	
	♦TII	
	TIID	
	TIIF	
	TSC	
	♦WAB	
1N4448	△GESY	275 - 33
	APD	
	APX	
	BNT	
	EMLS	
	♦ESMF	
	FSC	
	GIC	
	IDC	
	INTG	
	ITT	
	♦ITTB	
	MISI	
	MSC	
	♦MULB	
	♦NPC	
	♦PHIC	
	QUA	
	♦RADF	
	SDI	
	SES	
	TEC	
	♦TFKG	
	♦TII	
	TIID	
	TIIF	
	TSC	
	♦VALG	
	♦WAB	
1N4449	△GESY	275 - 34
	APD	
	BNT	
	EMLS	
	ESMF	
	FSC	
	GIC	
	IDC	
	ITT	
	♦ITTB	
	MISI	
	MSC	
	♦MULB	
	♦NPC	
	QUA	
	RADF	
	SDI	
	SES	
	TEC	
	♦TFKG	
	♦TII	
	TIID	
	TIIF	
	TSC	
	♦WAB	
1N4450	△GESY	269 - 10
	APD	
	BNT	
	EMLS	
	♦FSC	
	HSC	
	IDC	
	ITT	
	MSC	
	♦NPC	
	SDI	
	SES	
	TSC	
1N4451	△GESY	269 - 43
	APD	
	BNT	
	HSC	
	IDC	
	ITT	
	SDI	
	SES	
	TSC	
1N4452	APD	269 - 53
	BNT	
	HSC	
	IDC	
	ITT	
	SDI	
1N4453	BNT	268 - 3
	♦GESY	
	HSC	
	IDC	
	ITT	
	SDI	
	SES	
1N4454	♦△GESY	275 - 35
	APD	
	APX	
	BNT	
	♦ESMF	
	♦FSC	
	GIC	
	IDC	
	ITT	
	MISI	
	MSC	
	♦NPC	
	♦QUA	
	SES	
	TEC	
	♦TII	
	TIID	
	TIIF	
	TSC	
JAN1N4454	FSC	270 - 72
	GESY	
	GIC	
	ITT	
	TEC	
	TII	
	TSC	
1N4455	ETC	249 - 78
	IDC	
	QUA	
	TSC	
	UPI	
1N4456	△HPA	268 - 47
	IDC	
	QUA	
	SSI	
1N4457	HPA	269 -108
	IDC	
	SSI	
1N4458	EDI	363 - 15
	ETC	
	IDC	
	INRB	
	INRC	
	INRI	
	INRJ	
	SOD	
	SSI	
JAN1N4458,R	SOD	369 - 3
1N4459	EDI	373 - 15
	ETC	
	IDC	
	INRB	
	INRC	
	INRI	
	INRJ	
	SOD	
	SSI	
JAN1N4459,R	GESY	379 - 38
	SOD	
1N4460	♦△CRL	175 - 80
	APD	
	MSC	
	SDI	
	SEN	
JAN1N4460	MSC	175 - 81
1N4461	♦△CRL	178 - 46
	APD	
	GSE	
	IDC	
	MSC	
	SDI	
	SEN	
	UNI	

TYPE No.	MFRS	Pg&Line
JAN1N4461	MSC	178 - 47
1N4462	♦△CRL	180 - 87
	APD	
	GSE	
	IDC	
	MSC	
	SDI	
	SEN	
	UNI	
JAN1N4462	MSC	180 - 88
1N4463	♦△CRL	182-140
	APD	
	GSE	
	IDC	
	MSC	
	SDI	
	SEN	
	UNI	
JAN1N4463	MSC	182-141
1N4464	♦△CRL	186 - 69
	APD	
	GSE	
	IDC	
	MSC	
	SDI	
	SEN	
	UNI	
JAN1N4464	MSC	186 - 70
1N4465	APD	188-156
	♦CRL	
	GSE	
	MSC	
	SDI	
	SEN	
	UNI	
JAN1N4465	MSC	188-157
1N4466	♦△CRL	190-140
	APD	
	GSE	
	IDC	
	MSC	
	SDI	
	SEN	
	UNI	
JAN1N4466	MSC	190-141
1N4467	♦△CRL	193 - 49
	APD	
	GSE	
	MSC	
	SDI	
	SEN	
	UNI	
JAN1N4467	MSC	193 - 50
1N4468	♦△CRL	195 - 79
	APD	
	GSE	
	MSC	
	SDI	
	SEN	
	UNI	
JAN1N4468	MSC	195 - 80
1N4469	♦△CRL	198 - 52
	APD	
	GSE	
	MSC	
	SDI	
	SEN	
	UNI	
JAN1N4469	MSC	198 - 53
1N4470	♦△CRL	200 - 28
	APD	
	GSE	
	MSC	
	SDI	
	SEN	
	UNI	
JAN1N4470	MSC	200 - 29
1N4471	♦△CRL	202-144
	APD	
	GSE	
	MSC	
	SDI	
	SEN	
	UNI	
JAN1N4471	MSC	202-145
1N4472	♦△CRL	205 - 83
	APD	
	GSE	
	MSC	
	SDI	
	SEN	
	UNI	
JAN1N4472	MSC	205 - 84
1N4473	♦△CRL	207 - 68
	APD	
	GSE	
	MSC	
	SDI	
	SEN	
	UNI	
JAN1N4473	MSC	207 - 69
1N4474	♦△CRL	209 - 46
	APD	
	GSE	
	MSC	
	SDI	
	SEN	
	UNI	
JAN1N4474	MSC	209 - 47
1N4475	♦△CRL	211-134
	APD	
	GSE	
	MSC	
	SDI	
	SEN	
	UNI	
JAN1N4475	MSC	211-135
1N4476	♦△CRL	213-129
	APD	
	GSE	
	MSC	
	SDI	
	SEN	
	UNI	
JAN1N4476	MSC	213-130
1N4477	♦△CRL	215 - 98
	APD	
	GSE	
	MSC	
	SDI	
	SEN	
	UNI	
JAN1N4477	MSC	215 - 99
1N4478	♦△CRL	217 - 5
	GSE	
	MSC	
	SDI	
	SEN	
	UNI	
JAN1N4478	none	217 - 6
1N4479	♦△CRL	218 - 87
	GSE	
	MSC	
	SDI	
	SEN	
	UNI	
JAN1N4479	none	218 - 88
1N4480	♦△CRL	219-163
	GSE	
	MSC	
	SDI	
	SEN	
	UNI	
JAN1N4480	none	219-164
1N4481	♦△CRL	221-107
	GSE	
	MSC	
	SDI	
	SEN	
	UNI	
JAN1N4481	none	221-108
1N4482	♦△CRL	223 - 50
	GSE	
	MSC	
	SDI	
	SEN	
	UNI	
JAN1N4482	none	223 - 51
1N4483	♦△CRL	224-137
	GSE	
	MSC	
	SDI	
	SEN	
	UNI	

TYPE No.	MFRS	Pg&Line
JAN1N4483	none	224-138
1N4484	♦△CRL	226 - 81
	GSE	
	MSC	
	SDI	
	SEN	
	UNI	
JAN1N4484	none	226 - 82
1N4485	♦CRL	227-142
	GSE	
	MSC	
	SDI	
	SEN	
	UNI	
JAN1N4485	none	227-143
1N4486	♦△CRL	229 - 55
	GSE	
	MSC	
	SDI	
	SEN	
	UNI	
JAN1N4486	none	229 - 56
1N4487	♦△CRL	230-136
	GSE	
	MSC	
	SDI	
	SEN	
	UNI	
JAN1N4487	none	230-137
1N4488	♦△CRL	232 - 69
	GSE	
	MSC	
	SDI	
	SEN	
	UNI	
JAN1N4488	none	232 - 70
1N4489	♦△CRL	233-118
	GSE	
	MSC	
	SDI	
	SEN	
	UNI	
JAN1N4489	none	233-119
1N4490	♦△CRL	235 - 79
	GSE	
	MSC	
	SDI	
	SEN	
	UNI	
JAN1N4490	none	235 - 80
1N4491	♦△CRL	236-106
	GSE	
	MSC	
	SDI	
	SEN	
	UNI	
JAN1N4491	none	236-107
1N4492	♦△CRL	237-140
	GSE	
	MSC	
	SDI	
	SEN	
	UNI	
JAN1N4492	none	237-141
1N4493	♦△CRL	239-122
	GSE	
	MSC	
	SDI	
	SEN	
	UNI	
JAN1N4493	none	239-123
1N4494	♦△CRL	240-140
	GSE	
	MSC	
	SDI	
	SEN	
	UNI	
JAN1N4494	none	240-141
1N4495	♦△CRL	242 - 85
	GSE	
	MSC	
	SDI	
	SEN	
	UNI	
JAN1N4495	none	242 - 86
1N4496	♦△CRL	243-121
	GSE	
	MSC	
	SDI	
	SEN	
	UNI	
JAN1N4496	none	243-122
1N4497	△SOD	386 - 14
	EDI	
	INRB	
	INRC	
	INRI	
	INRJ	
	SSI	
1N4498	△SOD	394 - 61
	EDI	
	INRB	
	INRC	
	INRI	
	INRJ	
	SSI	
1N4499	CODI	175 - 43
	GSE	
	IDC	
	TSC	
1N4500	IDC	276 - 26
	TSC	
JAN1N4500	none	275 - 74
1N4501	△TEC	178-168
	CODI	
	DIC	
	GSE	
	IDC	
	♦MSC	
1N4502	GELC	247 - 4
	GIC	
	IDC	
	UPI	
1N4503	△UNI	215-129
	MSC	
	TRW	
1N4504	△UNI	243-135
	MSC	
	TRW	
1N4505	△SOD	400-105
	INRB	
	INRC	
	INRI	
	INRJ	
	SCO	
	SSI	
1N4506	EDL	315 - 59
	ETC	
	♦GESY	
	IDC	
	SAR	
	SOD	
	SSI	
	SYN	
	TUNL	
	UPI	
1N4507	EDL	334 - 60
	ETC	
	♦GESY	
	IDC	
	INRB	
	INRC	
	INRI	
	INRJ	
	SAR	
	SOD	
	SSI	
	SYN	
	TUNL	
1N4508	EDL	351 - 73
	ETC	
	♦GESY	
	IDC	
	INRB	
	INRC	
	INRI	
	INRJ	
	SAR	

cont next col

TYPE No.	MFRS	Pg&Line
1N4508		
(cont)	SOD	
	SSI	
	SYN	
	TUNL	
1N4509	EDI	363-106
	EDL	
	ETC	
	♦GESY	
	IDC	
	INRB	
	INRC	
	INRI	
	INRJ	
	SOD	
	SSI	
	SYN	
	TUNL	
1N4510	EDI	373 - 88
	EDL	
	ETC	
	♦GESY	
	IDC	
	INRB	
	INRC	
	INRI	
	INRJ	
	SOD	
	SSI	
	SYN	
	TUNL	
1N4511	EDI	379 - 54
	EDL	
	ETC	
	♦GESY	
	IDC	
	SOD	
	SSI	
	SYN	
	TUNL	
1N4513	△SOD	389 - 81
	EDI	
	TEK	
1N4514	△SOD	361 - 26
	EDI	
	ETC	
	IDC	
	PWC	
	QUA	
	TEK	
1N4517	△SOD	313 - 55
	ETC	
	PWC	
	QUA	
	TEK	
	UPI	
1N4523	GIC	265 - 16
	IDC	
	ITT	
	SSI	
1N4524	GIC	264 - 17
	IDC	
	ITT	
	SDI	
	SSI	
1N4525	ETC	316 - 83
	♦GESY	
	IDC	
	SAR	
	SOD	
	SSI	
	SYN	
	TUNL	
	UPI	
1N4526	ETC	335 - 95
	♦GESY	
	IDC	
	SAR	
	SOD	
	SSI	
	SYN	
	TUNL	
	UPI	
1N4527	♦GESY	352 - 80
	IDC	
	SAR	
	SOD	
	SSI	
	SYN	
	TUNL	
1N4528	BNT	364 - 89
	♦GESY	
	IDC	
	SOD	
	SSI	
	SYN	
	TUNL	
1N4529	♦GESY	374 - 51
	IDC	
	SOD	
	SSI	
	SYN	
	TUNL	
1N4530	♦GESY	379 - 80
	IDC	
	SOD	
	SSI	
	SYN	
	TUNL	
1N4531	△GESY	275 - 36
	APD	
	EMLS	
	♦FSC	
	♦MSC	
	♦TII	
	TIIB	
	TIID	
	♦TIIF	
	TSC	
JAN1N4531	GESY	277-100
	ITT	
	TII	
1N4532	♦△GESY	274 - 66
	EMLS	
	♦FSC	
	♦MSC	
	♦TII	
	TIIB	
	TIID	
	♦TIIF	
	TSC	
JAN1N4532	TII	270 - 73
	TSC	
1N4533	♦△GESY	268 - 96
	EMLS	
	FSC	
	IDC	
	♦MSC	
	♦TII	
	TIIB	
	TIID	
	♦TIIF	
	TSC	
1N4534	BNT	270 - 5
	FSC	
	GESY	
	IDC	
	♦MSC	
	♦TII	
	TIIB	
	TIID	
	♦TIIF	
	TSC	
JAN1N4534	none	270 - 6
1N4535	♦△DIC	167 - 91
	CODI	
	GSE	
	IDC	
1N4536	FSC	266 - 74
	GESY	
	IDC	
	♦MSC	
	♦TII	
	TIIB	
	TIID	
	♦TIIF	
	TSC	
1N4537	SCN	388 - 42
	SSI	
1N4538	SCN	391 - 93
	SSI	
1N4539	SCN	394 - 80
1N4540	SCN	396 - 7
	SSI	
1N4541	△TRW	257-104
1N4542	△TRW	259 - 56
1N4543	TRW	260 - 7
1N4544	△TRW	260 - 43
1N4545	△TRW	260 - 77

TYPE No.	MFRS	Pg&Line
1N4546	△SOD	411 - 50
	EDI	
1N4547	△HPA	266 - 95
	IDC	
1N4548	IDC	266 - 75
1N4549,A,B	♦△DIC	169 - 21
	GSE	
	IDC	
	♦MOTA	
	SSI	
JAN1N4549B,RB	DIC	169 - 22
	MOTA	
1N4550,A,B	♦△DIC	170 - 15
	GSE	
	IDC	
	♦MOTA	
JAN1N4550B,RB	DIC	170 - 16
	MOTA	
1N4551,A,B	♦△DIC	171 - 29
	ETC	
	GSE	
	IDC	
	♦MOTA	
JAN1N4551B,RB	DIC	171 - 30
	MOTA	
1N4552,A,B	♦△DIC	172 - 59
	ETC	
	GSE	
	IDC	
	♦MOTA	
JAN1N4552B,RB	DIC	172 - 60
	MOTA	
1N4553,A,B	♦△DIC	173-147
	ETC	
	GSE	
	IDC	
	♦MOTA	
JAN1N4553B,RB	DIC	173-148
	MOTA	
1N4554,A,B	♦△DIC	175-124
	ETC	
	GSE	
	IDC	
	♦MOTA	
JAN1N4554B,RB	DIC	175-125
	MOTA	
1N4555,A,B	♦△DIC	178-153
	ETC	
	GSE	
	IDC	
	♦MOTA	
1N4556,A,B	♦△DIC	181 - 1
	ETC	
	GSE	
	IDC	
	♦MOTA	
1N4557,A,B	♦△DIC	169 - 23
	ETC	
	GSE	
	IDC	
	♦MOTA	
1N4558,A,B	♦△DIC	170 - 17
	ETC	
	GSE	
	IDC	
	♦MOTA	
1N4559,A,B	♦△DIC	171 - 31
	ETC	
	GSE	
	IDC	
	♦MOTA	
1N4560,A,B	♦△DIC	172 - 61
	ETC	
	GSE	
	IDC	
	♦MOTA	
1N4561,A,B	♦△DIC	173-149
	ETC	
	GSE	
	IDC	
	♦MOTA	
1N4562,A,B	♦△DIC	175-126
	ETC	
	GSE	
	IDC	
	♦MOTA	
1N4563,A,B	♦△DIC	178-154
	ETC	
	GSE	
	IDC	
	♦MOTA	
1N4564,A,B	♦△DIC	181 - 2
	ETC	
	GSE	
	IDC	
	♦MOTA	
1N4565	♦△DIC	176 - 22
	CODI	
	♦CRL	
	GSE	
	IDC	
	INRB	
	INRC	
	INRI	
	INRJ	
	♦MOTA	
	♦MSC	
	SDI	
	TSC	
1N4565A	♦△DIC	176 - 23
	CODI	
	♦CRL	
	GSE	
	IDC	
	INRB	
	INRC	
	INRI	
	INRJ	
	♦MOTA	
	♦MSC	
	SDI	
	TSC	
1N4565B	IDC	175-181
	♦MSC	
1N4566	♦△DIC	176 - 24
	CODI	
	♦CRL	
	GSE	
	IDC	
	INRB	
	INRC	
	INRI	
	INRJ	
	♦MOTA	
	♦MSC	
	SDI	
	TSC	
1N4566A	♦△DIC	176 - 25
	CODI	
	♦CRL	
	GSE	
	IDC	
	INRB	
	INRC	
	INRI	
	INRJ	
	♦MOTA	
	♦MSC	
	SDI	
	TSC	
1N4566B	IDC	175-182
	♦MSC	
1N4567	♦△DIC	176 - 26
	CODI	
	♦CRL	
	GSE	
	IDC	
	INRB	
	INRC	
	INRI	
	INRJ	
	♦MOTA	
	♦MSC	
	SDI	
	TSC	
1N4567A	♦△DIC	176 - 27
	CODI	
	♦CRL	
	GSE	
	IDC	
	♦MOTA	
	♦MSC	
	SDI	
	TSC	
1N4567B	IDC	175-183
	♦MSC	
1N4568	♦△DIC	176 - 28
	CODI	
	♦CRL	

cont next page

△-Registered with JEDEC by this manufacturer

♦-Copy of mfr's data sheet may be ordered from D.A.T.A.

1. TYPE No. CROSS INDEX

IN TYPE NUMBER SEQUENCE

TYPE No.	MFRS	Pg&Line
1N4568		
(cont)	GSE	
	IDC	
	INRB	
	INRC	
	INRI	
	INRJ	
	♦MOTA	
	♦MSC	
	SDI	
	TSC	
1N4568A	♦△DIC	176- 29
	CODI	
	♦CRL	
	GSE	
	IDC	
	♦MOTA	
	♦MSC	
	SDI	
	TSC	
1N4568B	IDC	175-184
	♦MSC	
1N4569	♦△DIC	176- 30
	CODI	
	♦CRL	
	GSE	
	IDC	
	INRB	
	INRC	
	INRI	
	INRJ	
	♦MOTA	
	♦MSC	
	SDI	
	TSC	
1N4569A	♦△DIC	176- 31
	CODI	
	♦CRL	
	GSE	
	IDC	
	♦MOTA	
	♦MSC	
	SDI	
	TSC	
1N4569B	IDC	175-185
	♦MSC	
1N4570	♦△DIC	176- 32
	CODI	
	♦CRL	
	GSE	
	IDC	
	INRB	
	INRC	
	INRI	
	INRJ	
	KSC	
	♦MOTA	
	♦MSC	
	SDI	
	TNC	
	TSC	
1N4570A	♦△DIC	176- 33
	CODI	
	♦CRL	
	GSE	
	IDC	
	INRB	
	INRC	
	INRI	
	INRJ	
	KSC	
	♦MOTA	
	♦MSC	
	SDI	
	TNC	
	TSC	
1N4570B	IDC	175-186
	KSC	
	♦MSC	
1N4571	♦△DIC	176- 34
	CODI	
	♦CRL	
	GSE	
	IDC	
	INRB	
	INRC	
	INRI	
	INRJ	
	KSC	
	♦MOTA	
	♦MSC	
	SDI	
	TNC	
	TSC	
1N4571A	♦△DIC	176- 35
	CODI	
	♦CRL	
	GSE	
	IDC	
	INRB	
	INRC	
	INRI	
	INRJ	
	KSC	
	♦MOTA	
	♦MSC	
	SDI	
	TNC	
	TSC	
1N4571B	IDC	175-187
	KSC	
	♦MSC	
1N4572	♦△DIC	176- 36
	CODI	
	♦CRL	
	GSE	
	IDC	
	INRB	
	INRC	
	INRI	
	INRJ	
	KSC	
	♦MOTA	
	♦MSC	
	SDI	
	TNC	
	TSC	
1N4572A	♦△DIC	176- 37
	CODI	
	♦CRL	
	GSE	
	IDC	
	INRB	
	INRC	
	INRI	
	INRJ	
	KSC	
	♦MOTA	
	♦MSC	
	SDI	
	TNC	
	TSC	
1N4572B	IDC	175-188
	KSC	
	♦MSC	
1N4573	♦△DIC	176- 38
	CODI	
	♦CRL	
	GSE	
	IDC	
	INRB	
	INRC	
	INRI	
	INRJ	
	KSC	
	♦MOTA	
	♦MSC	
	SDI	
	TNC	
	TSC	
1N4573A	♦△DIC	176- 39
	CODI	
	♦CRL	
	GSE	
	IDC	
	INRB	
	INRC	
	INRI	
	INRJ	
	KSC	
	♦MOTA	
	♦MSC	
	SDI	
	TNC	
	TSC	
1N4573B	IDC	175-189
	KSC	
	♦MSC	
1N4574	♦△DIC	176- 40
	CODI	
	♦CRL	
	GSE	
	IDC	
	INRB	
	INRC	
	INRI	
	INRJ	
	KSC	
	♦MOTA	
	♦MSC	
	SDI	
	TSC	
1N4574A	♦△DIC	176- 41
	CODI	
	♦CRL	
	GSE	
	IDC	
	INRB	
	INRC	
	INRI	
	INRJ	
cont next col		

TYPE No.	MFRS	Pg&Line
1N4574A		
(cont)	KSC	
	♦MOTA	
	♦MSC	
	SDI	
	TSC	
1N4574B	IDC	175-190
	KSC	
	♦MSC	
1N4575	♦△DIC	176- 42
	CODI	
	♦CRL	
	GSE	
	IDC	
	INRB	
	INRC	
	INRI	
	INRJ	
	KSC	
	♦MOTA	
	♦MSC	
	SDI	
	TSC	
1N4575A	♦△DIC	176- 43
	CODI	
	♦CRL	
	GSE	
	IDC	
	INRB	
	INRC	
	INRI	
	INRJ	
	KSC	
	♦MOTA	
	♦MSC	
	SDI	
	TSC	
1N4575B	IDC	175-191
	KSC	
	♦MSC	
1N4576	♦△DIC	176- 44
	CODI	
	♦CRL	
	GSE	
	IDC	
	INRB	
	INRC	
	INRI	
	INRJ	
	KSC	
	♦MOTA	
	♦MSC	
	SDI	
	TSC	
1N4576A	♦△DIC	176- 45
	CODI	
	♦CRL	
	GSE	
	IDC	
	INRB	
	INRC	
	INRI	
	INRJ	
	KSC	
	♦MOTA	
	♦MSC	
	SDI	
	TSC	
1N4576B	IDC	175-192
	KSC	
	♦MSC	
1N4577	♦△DIC	176- 46
	CODI	
	♦CRL	
	GSE	
	IDC	
	INRB	
	INRC	
	INRI	
	INRJ	
	KSC	
	♦MOTA	
	♦MSC	
	SDI	
	TSC	
1N4577A	♦△DIC	176- 47
	CODI	
	♦CRL	
	GSE	
	IDC	
	INRB	
	INRC	
	INRI	
	INRJ	
	KSC	
	♦MOTA	
	♦MSC	
	SDI	
	TSC	
1N4577B	IDC	175-193
	KSC	
	♦MSC	
1N4578	♦△DIC	176- 48
	CODI	
	♦CRL	
	GSE	
	IDC	
	INRB	
	INRC	
	INRI	
	INRJ	
	KSC	
	♦MOTA	
	♦MSC	
	SDI	
	TSC	
1N4578B	IDC	175-194
	KSC	
	♦MSC	
1N4579	♦△DIC	176- 50
	CODI	
	♦CRL	
	GSE	
	IDC	
	INRB	
	INRC	
	INRI	
	INRJ	
	KSC	
	♦MOTA	
	♦MSC	
	SDI	
	TSC	
1N4578A	♦△DIC	176- 49
	CODI	
	♦CRL	
	GSE	
	IDC	
	INRB	
	INRC	
	INRI	
	INRJ	
	KSC	
	♦MOTA	
	♦MSC	
	SDI	
	TSC	
1N4579A	♦△DIC	176- 51
	CODI	
	♦CRL	
	GSE	
	IDC	
	INRB	
	INRC	
	INRI	
	INRJ	
	KSC	
	♦MOTA	
	♦MSC	
	SDI	
	TSC	
1N4579B	IDC	175-195
	KSC	
	♦MSC	
1N4580	♦△DIC	176- 52
	CODI	
	♦CRL	
	GSE	
	IDC	
	INRB	
	INRC	
	INRI	
	INRJ	
	KSC	
	♦MOTA	
	♦MSC	
	SDI	
	TSC	
1N4580A	♦△DIC	176- 53
	CODI	
	♦CRL	
	GSE	
	IDC	
	INRB	
	INRC	
	INRI	
	INRJ	
	KSC	
	♦MOTA	
	♦MSC	
	SDI	
	TSC	
1N4580B	IDC	175-196
	KSC	
	♦MSC	

TYPE No.	MFRS	Pg&Line
1N4581	♦△DIC	176- 54
	CODI	
	♦CRL	
	GSE	
	IDC	
	INRB	
	INRC	
	INRI	
	INRJ	
	KSC	
	♦MOTA	
	♦MSC	
	SDI	
	TSC	
1N4581A	♦△DIC	176- 55
	CODI	
	♦CRL	
	GSE	
	IDC	
	INRB	
	INRC	
	INRI	
	INRJ	
	KSC	
	♦MOTA	
	♦MSC	
	SDI	
	TSC	
1N4581B	IDC	175-197
	KSC	
	♦MSC	
1N4582	♦△DIC	176- 56
	CODI	
	♦CRL	
	GSE	
	IDC	
	INRB	
	INRC	
	INRI	
	INRJ	
	KSC	
	♦MOTA	
	♦MSC	
	SDI	
	TSC	
1N4582A	♦△DIC	176- 57
	CODI	
	♦CRL	
	GSE	
	IDC	
	INRB	
	INRC	
	INRI	
	INRJ	
	KSC	
	♦MOTA	
	♦MSC	
	SDI	
	TSC	
1N4582B	IDC	175-198
	KSC	
	♦MSC	
1N4583	♦△DIC	176- 58
	CODI	
	♦CRL	
	GSE	
	IDC	
	INRB	
	INRC	
	INRI	
	INRJ	
	KSC	
	♦MOTA	
	♦MSC	
	SDI	
	TSC	
1N4583A	♦△DIC	176- 59
	CODI	
	♦CRL	
	GSE	
	IDC	
	INRB	
	INRC	
	INRI	
	INRJ	
	KSC	
	♦MOTA	
	♦MSC	
	SDI	
	TSC	
1N4583B	IDC	175-199
	KSC	
	♦MSC	
1N4584	♦△DIC	176- 60
	CODI	
	♦CRL	
	GSE	
	IDC	
	INRB	
	INRC	
	INRI	
	INRJ	
	KSC	
	♦MOTA	
	♦MSC	
	SDI	
	TSC	
1N4584A	♦△DIC	176- 61
	CODI	
	♦CRL	
	GSE	
	IDC	
	INRB	
	INRC	
	INRI	
	INRJ	
	KSC	
	♦MOTA	
	♦MSC	
	SDI	
	TSC	
1N4584B	IDC	175-200
	KSC	
	♦MSC	
1N4585	♦△GIC	360- 77
	ETC	
	GICC	
	GICI	
	IDC	
	INTG	
	ITT	
	SAR	
	SCN	
	SES	
	SOIF	
	TEC	
	TSC	
JAN1N4585	GIC	360- 50
1N4586	♦△GIC	371- 5
	ETC	
	GICC	
	GICI	
	IDC	
	INTG	
	ITT	
	SAR	
	SCN	
	SES	
	SOIF	
	TEC	
JAN1N4586	GIC	370- 93
1N4587	△WESY	306- 20
	ETC	
	IDC	
	INRB	
	INRC	
	INRI	
	INRJ	
	SES	
	SSI	
	SYN	
1N4588	△WESY	317- 79
	ETC	
	IDC	
	INRB	
	INRC	
	INRI	
	INRJ	
	SES	
	SSI	
	SYN	
1N4589	△WESY	326- 5
	ETC	
	IDC	
	INRB	
	INRC	
	INRI	
	INRJ	
	SES	
	SSI	
	SYN	
1N4590	△WESY	336-109
	ETC	
	IDC	
	INRB	
	INRC	
	INRI	
	INRJ	
	SES	
	SSI	
	SYN	
1N4591	△WESY	344- 44
cont next col		

TYPE No.	MFRS	Pg&Line
1N4591		
(cont.)	ETC	
	IDC	
	INRB	
	INRC	
	INRI	
	INRJ	
	SES	
	SSI	
	SYN	
1N4592	△WESY	353- 72
	IDC	
	INRB	
	INRC	
	INRI	
	INRJ	
	SES	
	SSI	
	SYN	
1N4593	△WESY	365- 81
	IDC	
	INRB	
	INRC	
	INRI	
	INRJ	
	SES	
	SSI	
	SYN	
1N4594	△WESY	375- 19
	IDC	
	INRB	
	INRC	
	INRI	
	INRJ	
	SES	
	SSI	
	SYN	
1N4595	△WESY	380- 25
	IDC	
	INRB	
	INRC	
	INRI	
	INRJ	
	SES	
	SSI	
	SYN	
1N4596	△WESY	382- 99
	IDC	
	INRB	
	INRC	
	♦INRI	
	INRJ	
	SES	
	SSI	
	SYN	
1N4597	△TRW	399- 2
	IDC	
	SCN	
	SOD	
1N4598	♦CODI	549- 27
	IDC	
1N4598A	CODI	549- 28
	IDC	
1N4599	△CRY	556- 75
	♦CODI	
	IDC	
1N4599A	CODI	556- 76
	IDC	
1N4600	△MIC	514- 95
1N4601	△MIC	514- 96
1N4602	△MIC	514- 97
1N4603	△MIC	515- 57
	♦ALP	
1N4604	△MIC	515- 58
	♦ALP	
1N4605	△MIC	515- 59
	♦ALP	
1N4606	♦△GESY	276- 61
	APD	
	BNT	
	♦FSC	
	GIC	
	IDC	
	♦QUA	
	SSI	
	TEC	
	TII	
	TIID	
	TIIF	
	TSC	
1N4607	△GESY	276- 63
	APD	
	BNT	
	♦FSC	
	IDC	
	♦QUA	
	SSI	
	TIID	
	TIIF	
	TSC	
1N4608	△GESY	276- 64
	APD	
	BNT	
	IDC	
	♦QUA	
	SSI	
	TIID	
	TIIF	
	TSC	
1N4609	BNT	549- 29
	♦CODI	
1N4609A	CODI	549- 30
	IDC	
1N4610	♦△FSC	276- 27
	IDC	
	TSC	
1N4611	△FSC	176-156
	CODI	
	CRL	
	IDC	
	KSC	
1N4611A	△FSC	176-157
	CODI	
	CRL	
	IDC	
	KSC	
	♦MSC	
1N4611B	△FSC	176-158
	CODI	
	CRL	
	IDC	
	KSC	
	♦MSC	
1N4611C	△FSC	176-159
	CODI	
	CRL	
	IDC	
	KSC	
	♦MSC	
1N4612	△FSC	176-160
	CODI	
	CRL	
	IDC	
	KSC	
1N4612A	△FSC	176-161
	CODI	
	CRL	
	IDC	
	KSC	
	♦MSC	
1N4612B	△FSC	176-162
	CODI	
	CRL	
	IDC	
	KSC	
	♦MSC	
1N4612C	△FSC	176-163
	CODI	
	CRL	
	IDC	
	KSC	
	♦MSC	
1N4613	△FSC	176-164
	CODI	
	CRL	
	IDC	
	KSC	
1N4613A	CODI	176-165
	CRL	
	FSC	
	IDC	
	KSC	
	♦MSC	
1N4613B	△FSC	176-166
cont next col		

TYPE No.	MFRS	Pg&Line
1N4613B		
(cont)	CODI	
	CRL	
	IDC	
	KSC	
	♦MSC	
1N4613C	△FSC	176-167
	CODI	
	CRL	
	IDC	
	KSC	
	♦MSC	
1N4614	△TRW	165- 89
	CODI	
	♦DIC	
	IDC	
	SSI	
	TSC	
JAN1N4614	none	165- 93
1N4615	△TRW	165-108
	CODI	
	♦DIC	
	IDC	
	SSI	
	TSC	
JAN1N4615	none	165-115
1N4616	△TRW	165-131
	CODI	
	♦DIC	
	IDC	
	SSI	
	TSC	
JAN1N4616	none	165-135
1N4617	△TRW	165-153
	CODI	
	♦DIC	
	IDC	
	SSI	
	TSC	
JAN1N4617	none	165-163
1N4618	△TRW	166- 12
	CODI	
	♦DIC	
	IDC	
	TSC	
JAN1N4618	none	166- 27
1N4619	△TRW	166- 79
	CODI	
	♦DIC	
	IDC	
	TSC	
JAN1N4619	none	166- 98
1N4620	△TRW	166-157
	CODI	
	♦DIC	
	IDC	
	TSC	
JAN1N4620	none	166-178
1N4621	△TRW	167-114
	CODI	
	♦DIC	
	IDC	
	TSC	
JAN1N4621	none	167-134
1N4622	△TRW	168- 66
	CODI	
	♦DIC	
	IDC	
	TSC	
JAN1N4622	none	168- 88
1N4623	△TRW	169- 61
	CODI	
	♦DIC	
	IDC	
	TSC	
JAN1N4623	none	169- 88
1N4624	△TRW	170- 50
	CODI	
	♦DIC	
	IDC	
	TSC	
JAN1N4624	none	170- 82
1N4625	△TRW	171- 96
	CODI	
	♦DIC	
	IDC	
	TSC	
JAN1N4625	none	171-127
1N4626	△TRW	172-111
	CODI	
	♦DIC	
	IDC	
	TSC	
JAN1N4626	none	172-167
1N4627	△TRW	174-103
	CODI	
	♦DIC	
	IDC	
	TSC	
JAN1N4627	none	174-150
1N4628	△TRW	177-123
	CODI	
	DIC	
	IDC	
	TEK	
	TSC	
	UNI	
1N4629	△TRW	179-171
	CODI	
	DIC	
	IDC	
	TEK	
	TSC	
	UNI	
1N4630	△TRW	182- 38
	CODI	
	DIC	
	IDC	
	TEK	
	TSC	
	UNI	
1N4631	△TRW	185-150
	CODI	
	DIC	
	IDC	
	TEK	
	TSC	
	UNI	
1N4632	△TRW	188- 38
	CODI	
	DIC	
	IDC	
	TEK	
	TSC	
	UNI	
1N4633	△TRW	190- 44
	CODI	
	DIC	
	IDC	
	TEK	
	TSC	
	UNI	
1N4634	CODI	192-109
	DIC	
	IDC	
	TEK	
	TRW	
	TSC	
	UNI	
1N4635	△TRW	194-170
	CODI	
	DIC	
	IDC	
	TEK	
	TSC	
	UNI	
1N4636	△TRW	197-127
	CODI	
	DIC	
	IDC	
	TEK	
	TSC	
	UNI	
1N4637	△TRW	199-121
	CODI	
	DIC	
	IDC	
	TEK	
	TSC	
	UNI	
1N4638	△TRW	202- 34
	CODI	
	DIC	
	IDC	
	TEK	
	TSC	
	UNI	
1N4639	△TRW	204-174
cont.next page		

△-Registered with JEDEC by this manufacturer

♦-Copy of mfr's data sheet may be ordered from D.A.T.A.

1. TYPE No. CROSS INDEX

IN TYPE NUMBER SEQUENCE

TYPE No.	MFRS	Pg&Line
1N4639		
(cont)	CODI	
	DIC	
	TEK	
	TSC	
	UNI	
1N4640	△TRW	206-147
	CODI	
	DIC	
	IDC	
	TEK	
	TSC	
	UNI	
1N4641	△TRW	208-139
	CODI	
	DIC	
	IDC	
	TEK	
	TSC	
	UNI	
1N4642	△TRW	211- 30
	CODI	
	DIC	
	IDC	
	TEK	
	TSC	
	UNI	
1N4643	△TRW	213- 40
	CODI	
	DIC	
	IDC	
	TEK	
	TSC	
	UNI	
1N4644	△TRW	215- 4
	DIC	
	IDC	
	TEK	
	TSC	
	UNI	
1N4645	DIC	216-121
	IDC	
	TEK	
	TRW	
	TSC	
	UNI	
1N4646	△TRW	218- 18
	DIC	
	IDC	
	TEK	
	TSC	
	UNI	
1N4647	△TRW	219- 99
	DIC	
	IDC	
	TEK	
	TSC	
	UNI	
1N4648	△TRW	221- 33
	DIC	
	IDC	
	TEK	
	TSC	
	UNI	
1N4649	△TRW	167- 47
	IDC	
	PWC	
	TSC	
1N4650	△TRW	168- 5
	IDC	
	PWC	
	TSC	
1N4651	△TRW	168-155
	IDC	
	PWC	
	TSC	
	UPI	
1N4652	△TRW	169-154
	IDC	
	PWC	
	TSC	
1N4653	△TRW	170-159
	IDC	
	PWC	
	TSC	
1N4654	△TRW	172- 2
	IDC	
	PWC	
	TSC	
1N4655	△TRW	173- 69
	IDC	
	PWC	
	TSC	
1N4656	△TRW	175- 44
	IDC	
	PWC	
	TSC	
1N4657	△TRW	177-159
	IDC	
	PWC	
	TSC	
	UNI	
1N4658	△TRW	180- 27
	IDC	
	PWC	
	TSC	
	UNI	
1N4659	IDC	182- 75
	PWC	
	TRW	
	TSC	
	UNI	
1N4660	△TRW	186- 9
	IDC	
	PWC	
	TSC	
	UNI	
1N4661	△TRW	188- 84
	IDC	
	PWC	
	TSC	
	UNI	
1N4662	△TRW	190- 77
	IDC	
	PWC	
	TSC	
	UNI	
1N4663	△TRW	192-152
	IDC	
	PWC	
	TSC	
	UNI	
1N4664	△TRW	195- 16
	IDC	
	PWC	
	TSC	
	UNI	
1N4665	△TRW	197-168
	IDC	
	PWC	
	TSC	
	UNI	
1N4666	△TRW	199-154
	IDC	
	PWC	
	TSC	
	UNI	
1N4667	IDC	202- 76
	PWC	
	TRW	
	TSC	
	UNI	
1N4668	△TRW	205- 25
	IDC	
	PWC	
	TSC	
	UNI	
1N4669	△TRW	207- 4
	IDC	
	PWC	
	TSC	
	UNI	
1N4670	△TRW	208-174
	IDC	
	PWC	
	TSC	
	UNI	
1N4671	△TRW	211- 67
	IDC	
	PWC	
	TSC	
	UNI	
1N4672	△TRW	213- 69
	IDC	
	PWC	
	TSC	
	UNI	
1N4673	△TRW	215- 36
	IDC	
	TSC	
	UNI	
1N4674	△TRW	216-146
	IDC	
	PWC	
	TSC	
	UNI	
1N4675	△TRW	218- 45
	IDC	
	PWC	
	TSC	
	UNI	
1N4676	△TRW	219-121
	IDC	
	PWC	
	TSC	
	UNI	
1N4677	△TRW	221- 61
	IDC	
	PWC	
	TSC	
	UNI	
1N4678	CODI	165- 90
	♦DIC	
	IDC	
	TRW	
1N4679	△TRW	165-109
	CODI	
	♦DIC	
	IDC	
1N4680	△TRW	165-132
	CODI	
	♦DIC	
	IDC	
1N4681	△TRW	165-154
	CODI	
	♦DIC	
	IDC	
1N4682	△TRW	166- 13
	CODI	
	♦DIC	
	IDC	
1N4683	△TRW	166- 80
	CODI	
	♦DIC	
	IDC	
1N4684	△TRW	166-158
	CODI	
	♦DIC	
	IDC	
1N4685	△TRW	167-115
	CODI	
	♦DIC	
	IDC	
1N4686	△TRW	168- 67
	CODI	
	♦DIC	
	IDC	
1N4687	△TRW	169- 62
	CODI	
	♦DIC	
	IDC	
1N4688	△TRW	170- 51
	CODI	
	♦DIC	
	IDC	
1N4689	△TRW	171- 97
	CODI	
	♦DIC	
	IDC	
1N4690	△TRW	172-112
	CODI	
	♦DIC	
	IDC	
1N4691	△TRW	174-104
	CODI	
	♦DIC	
	IDC	
1N4692	△TRW	176-211
	CODI	
	♦DIC	
	IDC	
1N4693	△TRW	179- 46
	CODI	
	♦DIC	
	IDC	
1N4694	△TRW	181- 98
	CODI	
	♦DIC	
	IDC	
1N4695	△TRW	184- 16
	CODI	
	♦DIC	
	IDC	
1N4696	△TRW	185- 7
	CODI	
	♦DIC	
	IDC	
1N4697	△TRW	187- 93
	CODI	
	♦DIC	
	IDC	
1N4698	△TRW	189-138
	CODI	
	♦DIC	
	IDC	
1N4699	△TRW	191-175
	CODI	
	♦DIC	
	IDC	
1N4700	△TRW	194- 73
	CODI	
	♦DIC	
	IDC	
1N4701	△TRW	196- 22
	CODI	
	♦DIC	
	IDC	
1N4702	△TRW	197- 14
	CODI	
	♦DIC	
	IDC	
1N4703	△TRW	199- 24
	CODI	
	♦DIC	
	IDC	
1N4704	△TRW	200-169
	CODI	
	♦DIC	
	IDC	
1N4705	△TRW	201- 97
	CODI	
	♦DIC	
	IDC	
1N4706	△TRW	203-111
	CODI	
	♦DIC	
	IDC	
1N4707	△TRW	204- 79
	CODI	
	♦DIC	
	IDC	
1N4708	△TRW	206- 46
	CODI	
	♦DIC	
	IDC	
1N4709	△TRW	208- 50
	CODI	
	♦DIC	
	IDC	
1N4710	△TRW	209-186
	CODI	
	♦DIC	
	IDC	
1N4711	△TRW	210-115
	CODI	
	♦DIC	
	IDC	
1N4712	△TRW	212- 89
	CODI	
	♦DIC	
	IDC	
1N4713	△TRW	212-153
	CODI	
	♦DIC	
	IDC	
1N4714	△TRW	214-102
	♦DIC	
	IDC	
1N4715	△TRW	216- 68
	♦DIC	
	IDC	
1N4716	△TRW	217-142
	♦DIC	
	IDC	
1N4717	△TRW	219- 48
	♦DIC	
	IDC	
1N4718	△ITT	272- 38
	IDC	
	SSI	
1N4719	♦△MOTA	295- 76
	EDI	
	IDC	
	SCN	
	SCO	
	TEC	
	UPI	
1N4720	♦△MOTA	303- 7
	EDI	
	IDC	
	SCN	
	SCO	
	TEC	
	UPI	
1N4721	♦△MOTA	314- 16
	EDI	
	SCN	
	SCO	
	TEC	
	UPI	
1N4722	♦△MOTA	333- 9
	EDI	
	IDC	
	SCN	
	SCO	
	TEC	
	UPI	
1N4723	♦△MOTA	350- 27
	EDI	
	IDC	
	SCN	
	SCO	
	TEC	
1N4724	♦△MOTA	362- 85
	EDI	
	IDC	
	SCN	
	SCO	
	TEC	
1N4725	♦△MOTA	372- 92
	EDI	
	IDC	
	SCN	
	SCO	
	TEC	
1N4726	IDC	265- 96
1N4727	△GESY	267- 6
	APD	
	BNT	
	♦FSC	
	GIC	
	IDC	
	♦TII	
	TIID	
	♦TIIF	
	TSC	
1N4728,A	♦△MOTA	167- 48
	♦ASC	
	BNT	
	♦DIC	
	GSE	
	IDC	
	INRB	
	♦INRC	
	♦INRI	
	INRJ	
	SES	
	TNC	
	USS	
1N4729,A	♦△MOTA	168- 6
	♦ASC	
	BNT	
	♦DIC	
	GSE	
	IDC	
	INRB	
	♦INRC	
	♦INRI	
	INRJ	
	SES	
	TNC	
	USS	
1N4730,A	♦△MOTA	168-156
	♦ASC	
	BNT	
	♦DIC	
	GSE	
	IDC	
	INRB	
	♦INRC	
	♦INRI	
	INRJ	
	PWC	
	SES	
	TNC	
	USS	
1N4731,A	♦△MOTA	169-155
	♦ASC	
	BNT	
	♦DIC	
	GSE	
	IDC	
	INRB	
	♦INRC	
	♦INRI	
	INRJ	
	PWC	
	SES	
	TNC	
	USS	
1N4732,A	♦△MOTA	170-160
	♦ASC	
	BNT	
	♦DIC	
	GSE	
	IDC	
	INRB	
	♦INRC	
	♦INRI	
	INRJ	
	PWC	
	SES	
	TNC	
	USS	
1N4733,A	♦△MOTA	172- 3
	♦ASC	
	BNT	
	♦DIC	
	GSE	
	IDC	
	INRB	
	♦INRC	
	♦INRI	
	INRJ	
	PWC	
	SES	
	TNC	
	USS	
1N4734,A	♦△MOTA	173- 70
	♦ASC	
	BNT	
	♦DIC	
	GSE	
	IDC	
	INRB	
	♦INRC	
	♦INRI	
	INRJ	
	PWC	
	SAR	
	SES	
	TNC	
	USS	
1N4735,A	♦△MOTA	175- 45
	♦ASC	
	BNT	
	♦DIC	
	GSE	
	IDC	
	INRB	
	♦INRC	
	♦INRI	
1N4735,A		
(cont)	INRJ	
	PWC	
	SAR	
	SES	
	TNC	
	USS	
1N4736	△MOTA	177-160
	ASC	
	BNT	
	♦CRL	
	♦DIC	
	GSE	
	IDC	
	INRB	
	♦INRC	
	INRI	
	INRJ	
	MSC	
	PWC	
	SAR	
	SCN	
	SEN	
	SES	
	TNC	
	UNI	
	USS	
1N4736A	△MOTA	177-161
	ASC	
	BNT	
	♦CRL	
	♦DIC	
	GSE	
	IDC	
	INRB	
	♦INRC	
	INRI	
	INRJ	
	MSC	
	PWC	
	SAR	
	SCN	
	SEN	
	SES	
	TNC	
	UNI	
	USS	
1N4737	△MOTA	180- 28
	ASC	
	BNT	
	♦CRL	
	♦DIC	
	GSE	
	IDC	
	INRB	
	♦INRC	
	INRI	
	INRJ	
	MSC	
	PWC	
	SAR	
	SCN	
	SEN	
	SES	
	TNC	
	UNI	
	USS	
1N4737A	△MOTA	180- 29
	ASC	
	BNT	
	♦CRL	
	♦DIC	
	GSE	
	IDC	
	INRB	
	♦INRC	
	INRI	
	INRJ	
	MSC	
	PWC	
	SAR	
	SCN	
	SEN	
	SES	
	TNC	
	UNI	
	USS	
1N4738	△MOTA	182- 76
	ASC	
	BNT	
	♦CRL	
	♦DIC	
	GSE	
	IDC	
	INRB	
	♦INRC	
	INRI	
	INRJ	
	MSC	
	PWC	
	SAR	
	SEN	
	SES	
	TNC	
	UNI	
	USS	
1N4738A	△MOTA	182- 77
	ASC	
	BNT	
	♦CRL	
	♦DIC	
	GSE	
	IDC	
	INRB	
	♦INRC	
	INRI	
	INRJ	
	MSC	
	PWC	
	SAR	
	SCN	
	SEN	
	SES	
	TNC	
	UNI	
	USS	
1N4739	△MOTA	186- 10
	ASC	
	BNT	
	♦CRL	
	♦DIC	
	GSE	
	IDC	
	INRB	
	♦INRC	
	INRI	
	INRJ	
	MSC	
	PWC	
	SAR	
	SCN	
	SEN	
	SES	
	TNC	
	UNI	
	USS	
1N4739A	△MOTA	186- 11
	ASC	
	BNT	
	♦CRL	
	♦DIC	
	GSE	
	IDC	
	INRB	
	♦INRC	
	INRI	
	INRJ	
	MSC	
	PWC	
	SAR	
	SCN	
	SEN	
	SES	
	TNC	
	UNI	
	USS	
1N4740	△MOTA	188- 85
	ASC	
	BNT	
	♦CRL	
	♦DIC	
	GSE	
	IDC	
	INRB	
	♦INRC	
	INRI	
	INRJ	
	MSC	
	PWC	
	SAR	
	SCN	
	SEN	
	SES	
	TNC	
	UNI	
	USS	
1N4740A	△MOTA	188- 86
	ASC	
	BNT	
	♦CRL	
	♦DIC	
	GSE	
	IDC	
	INRB	
	♦INRC	
	INRI	
	INRJ	
	MSC	
	PWC	
	SAR	
	SCN	
	SEN	
	SES	
	TNC	
	UNI	
	USS	
1N4741	△MOTA	190- 78
	ASC	
	BNT	
	♦CRL	
	♦DIC	
cont.next col		
1N4741		
(cont.)	GSE	
	IDC	
	INRB	
	♦INRC	
	INRI	
	INRJ	
	MSC	
	PWC	
	SAR	
	SCN	
	SEN	
	SES	
	TNC	
	UNI	
	USS	
1N4741A	△MOTA	190- 79
	ASC	
	BNT	
	♦CRL	
	♦DIC	
	GSE	
	IDC	
	INRB	
	♦INRC	
	INRI	
	INRJ	
	MSC	
	PWC	
	SAR	
	SEN	
	SES	
	TNC	
	UNI	
	USS	
1N4742	△MOTA	192-153
	ASC	
	BNT	
	♦CRL	
	♦DIC	
	GSE	
	IDC	
	INRB	
	♦INRC	
	INRI	
	INRJ	
	MSC	
	PWC	
	SAR	
	SCN	
	SEN	
	SES	
	TNC	
	UNI	
	USS	
1N4742A	△MOTA	192-154
	ASC	
	BNT	
	♦CRL	
	♦DIC	
	GSE	
	IDC	
	INRB	
	♦INRC	
	INRI	
	INRJ	
	MSC	
	PWC	
	SAR	
	SEN	
	SES	
	TNC	
	UNI	
	USS	
1N4743	△MOTA	195- 17
	ASC	
	BNT	
	♦CRL	
	♦DIC	
	GSE	
	IDC	
	INRB	
	♦INRC	
	INRI	
	INRJ	
	MSC	
	PWC	
	SAR	
	SCN	
	SEN	
	SES	
	TNC	
	UNI	
	USS	
1N4743A	△MOTA	195- 18
	ASC	
	BNT	
	♦CRL	
	♦DIC	
	GSE	
	IDC	
	INRB	
	♦INRC	
	INRI	
	INRJ	
	MSC	
	PWC	
	SAR	
	SEN	
	SES	
	TNC	
	UNI	
	USS	
1N4744	△MOTA	197-169
	ASC	
	BNT	
	♦CRL	
	♦DIC	
	GSE	
	IDC	
	INRB	
	♦INRC	
	INRI	
	INRJ	
	MSC	
	PWC	
	SAR	
	SCN	
	SEN	
	SES	
	TNC	
	UNI	
	USS	
1N4744A	△MOTA	197-170
	ASC	
	BNT	
	♦CRL	
	♦DIC	
	GSE	
	IDC	
	INRB	
	♦INRC	
	INRI	
	INRJ	
	MSC	
	PWC	
	SAR	
	SEN	
	SES	
	TNC	
	UNI	
	USS	
1N4745	△MOTA	199-155
	ASC	
	BNT	
	♦CRL	
	♦DIC	
	GSE	
	IDC	
	INRB	
	♦INRC	
	INRI	
	INRJ	
	MSC	
	PWC	
	SAR	
	SCN	
	SEN	
	SES	
	TNC	
	UNI	
	USS	
1N4745A	△MOTA	199-156
	ASC	
	BNT	
	♦CRL	
	♦DIC	
	GSE	
	IDC	
	INRB	
	♦INRC	
	INRI	
	INRJ	
	MSC	
	PWC	
	SAR	
	SEN	
	SES	
	TNC	
	UNI	
	USS	
1N4746	△MOTA	202- 77
	ASC	
	BNT	
	♦CRL	
	♦DIC	
	GSE	
	IDC	
	INRB	
	♦INRC	
	INRI	
	INRJ	
	MSC	
	PWC	
	SAR	
	SCN	
	SEN	
	SES	
	UNI	
	USS	

△-Registered with JEDEC by this manufacturer

♦-Copy of mfr's data sheet may be ordered from D.A.T.A.

1. TYPE No. CROSS INDEX

IN TYPE NUMBER SEQUENCE

TYPE No.	MFRS	Pg&Line
1N4746A	△MOTA	202 - 78
ASC	BNT	
♦CRL	♦DIC	
GSE	IDC	
INRB	♦INRC	
INRI	INRJ	
MSC	PWC	
SAR	SEN	
SES	UNI	
	USS	
1N4747	△MOTA	205 - 26
ASC	BNT	
♦CRL	♦DIC	
GESY	GSE	
IDC	INRB	
♦INRC	INRI	
INRJ	MSC	
PWC	SAR	
SCN	SEN	
SES	TNC	
UNI	USS	
1N4747A	△MOTA	205 - 27
ASC	BNT	
♦CRL	♦DIC	
GESY	GSE	
IDC	INRB	
♦INRC	INRI	
INRJ	MSC	
PWC	SAR	
SEN	SES	
TNC	UNI	
	USS	
1N4748	△MOTA	207 - 5
ASC	BNT	
♦CRL	♦DIC	
GSE	IDC	
INRB	♦INRC	
INRI	INRJ	
MSC	PWC	
SAR	SCN	
SEN	SES	
TNC	UNI	
	USS	
1N4748A	△MOTA	207 - 6
ASC	BNT	
♦CRL	♦DIC	
GSE	IDC	
INRB	♦INRC	
INRI	INRJ	
MSC	PWC	
SAR	SEN	
SES	TNC	
UNI	USS	
1N4749	△MOTA	208-175
ASC	BNT	
♦CRL	♦DIC	
GSE	IDC	
INRB	INRI	
INRJ	MSC	
PWC	SAR	
SCN	SEN	
SES	TNC	
UNI	USS	
1N4749A	△MOTA	208-176
ASC	BNT	
♦CRL	♦DIC	
GSE	IDC	
INRB	♦INRC	
INRI	INRJ	
MSC	PWC	
SAR	SEN	
SES	TNC	
UNI	USS	
1N4750	△MOTA	211 - 68
ASC	BNT	
♦CRL	♦DIC	
GSE	IDC	
INRB	♦INRC	
INRI	INRJ	
MSC	PWC	
SAR	SCN	
SEN	SES	
TNC	UNI	
	USS	
1N4750A	△MOTA	211 - 69
ASC	BNT	
♦CRL	♦DIC	
GSE	IDC	
INRB	♦INRC	
INRI	INRJ	
MSC	PWC	
SAR	SEN	
SES	TNC	
UNI	USS	
1N4751	△MOTA	213 - 70
ASC	BNT	
♦CRL	♦DIC	
GSE	IDC	
INRB	♦INRC	
INRI	INRJ	
MSC	PWC	
SAR	SCN	
SEN	SES	
TNC	UNI	
	USS	
1N4751A	△MOTA	213 - 71
ASC	BNT	
♦CRL	♦DIC	
GSE	IDC	
INRB	♦INRC	
INRI	INRJ	
MSC	PWC	
SAR	SEN	

cont next col

TYPE No.	MFRS	Pg&Line
1N4751A (cont.)	SES	
TNC	UNI	
	USS	
1N4752	△MOTA	215 - 37
ASC	BNT	
♦CRL	♦DIC	
GSE	IDC	
INRB	♦INRC	
INRI	INRJ	
MSC	PWC	
SAR	SCN	
SEN	SES	
TNC	UNI	
	USS	
1N4752A	△MOTA	215 - 38
ASC	BNT	
♦CRL	♦DIC	
GSE	IDC	
INRB	♦INRC	
INRI	INRJ	
MSC	PWC	
SAR	SEN	
SES	TNC	
UNI	USS	
1N4753	△MOTA	216-147
ASC	BNT	
♦CRL	♦DIC	
GSE	IDC	
INRB	♦INRC	
INRI	INRJ	
MSC	PWC	
SAR	SCN	
SEN	SES	
TNC	UNI	
	USS	
1N4753A	△MOTA	216-148
ASC	BNT	
♦CRL	♦DIC	
GSE	IDC	
INRB	♦INRC	
INRI	INRJ	
MSC	PWC	
SAR	SEN	
SES	TNC	
UNI	USS	
1N4754	△MOTA	218 - 46
ASC	BNT	
♦CRL	♦DIC	
GSE	IDC	
INRB	♦INRC	
INRI	INRJ	
MSC	PWC	
SAR	SEN	
SES	TNC	
UNI	USS	
1N4754A	△MOTA	218 - 47
ASC	BNT	
♦CRL	♦DIC	
GSE	IDC	
INRB	♦INRC	
INRI	INRJ	
MSC	PWC	
SAR	SEN	
SES	TNC	
UNI	USS	
1N4755	△MOTA	219-122
ASC	BNT	
♦CRL	♦DIC	
GSE	IDC	
INRB	♦INRC	
INRI	INRJ	
MSC	PWC	
SAR	SCN	
SEN	SES	
TNC	UNI	
	USS	
1N4755A	△MOTA	219-123
ASC	BNT	
♦CRL	♦DIC	
GSE	IDC	
INRB	♦INRC	
INRI	INRJ	
MSC	PWC	
SAR	SEN	
SES	TNC	
UNI	USS	
1N4756	△MOTA	221 - 62
ASC	BNT	
♦CRL	♦DIC	
GSE	IDC	
INRB	♦INRC	
INRI	INRJ	
MSC	PWC	
SAR	SCN	
SEN	SES	
TNC	UNI	
	USS	
1N4756A	△MOTA	221 - 63
ASC	BNT	
♦CRL	♦DIC	
GSE	IDC	
INRB	♦INRC	
INRI	INRJ	
MSC	PWC	
SAR	SEN	
SES	TNC	
UNI	USS	
1N4757	△MOTA	223 - 13
ASC	BNT	
♦CRL	♦DIC	
GSE	IDC	

cont next col

TYPE No.	MFRS	Pg&Line
1N4757 (cont)	INRB	
♦INRC	INRI	
INRJ	MSC	
PWC	SAR	
SCN	SEN	
SES	TNC	
UNI	USS	
1N4757A	△MOTA	223 - 14
ASC	BNT	
♦CRL	♦DIC	
GSE	IDC	
INRB	♦INRC	
INRI	INRJ	
MSC	PWC	
SAR	SEN	
SES	TNC	
UNI	USS	
1N4758	△MOTA	224 - 90
ASC	BNT	
♦CRL	♦DIC	
GSE	IDC	
INRB	♦INRC	
INRI	INRJ	
MSC	PWC	
SAR	SCN	
SEN	SES	
TNC	UNI	
	USS	
1N4758A	△MOTA	224 - 91
ASC	BNT	
♦CRL	♦DIC	
GSE	IDC	
INRB	♦INRC	
INRI	INRJ	
MSC	PWC	
SAR	SEN	
SES	TNC	
UNI	USS	
1N4759	△MOTA	226 - 43
ASC	BNT	
♦CRL	♦DIC	
GSE	IDC	
INRB	♦INRC	
INRI	INRJ	
MSC	PWC	
SAR	SCN	
SEN	SES	
TNC	UNI	
	USS	
1N4759A	△MOTA	226 - 44
ASC	BNT	
♦CRL	♦DIC	
GSE	IDC	
INRB	♦INRC	
INRI	INRJ	
MSC	PWC	
SAR	SEN	
SES	TNC	
UNI	USS	
1N4760	△MOTA	227 - 99
ASC	BNT	
♦CRL	♦DIC	
GSE	IDC	
INRB	♦INRC	
INRI	INRJ	
MSC	PWC	
SAR	SCN	
SEN	SES	
TNC	UNI	
	USS	
1N4760A	△MOTA	227-100
ASC	BNT	
♦CRL	♦DIC	
GSE	IDC	
INRB	♦INRC	
INRI	INRJ	
MSC	PWC	
SAR	SEN	
SES	TNC	
UNI	USS	
1N4761	△MOTA	229 - 15
ASC	BNT	
♦CRL	♦DIC	
GSE	IDC	
INRB	♦INRC	
INRI	INRJ	
MSC	PWC	
SAR	SCN	
SEN	SES	
TNC	UNI	
	USS	
1N4761A	△MOTA	229 - 16
ASC	BNT	
♦CRL	♦DIC	
GSE	IDC	
INRB	♦INRC	
INRI	INRJ	
MSC	PWC	
SAR	SEN	
SES	TNC	
UNI	USS	
1N4762	△MOTA	230 - 95
ASC	BNT	
♦CRL	♦DIC	
GSE	IDC	
INRB	♦INRC	
INRI	INRJ	
MSC	PWC	
SAR	SCN	
SEN	SES	
TNC	UNI	
	USS	

TYPE No.	MFRS	Pg&Line
1N4762A	△MOTA	230 - 96
ASC	BNT	
♦CRL	♦DIC	
GSE	IDC	
INRB	♦INRC	
INRI	INRJ	
MSC	PWC	
SAR	SEN	
SES	TNC	
UNI	USS	
1N4763	△MOTA	232 - 34
ASC	BNT	
♦CRL	♦DIC	
GSE	IDC	
INRB	♦INRC	
INRI	INRJ	
MSC	PWC	
SAR	SCN	
SEN	SES	
TNC	UNI	
	USS	
1N4763A	△MOTA	232 - 35
ASC	BNT	
♦CRL	♦DIC	
GSE	IDC	
INRB	♦INRC	
INRI	INRJ	
MSC	PWC	
SAR	SEN	
SES	TNC	
UNI	USS	
1N4764	△MOTA	233 - 74
ASC	BNT	
♦CRL	♦DIC	
GSE	IDC	
INRB	♦INRC	
INRI	INRJ	
MSC	PWC	
SAR	SCN	
SEN	SES	
TNC	UNI	
	USS	
1N4764A	△MOTA	233 - 75
ASC	BNT	
♦CRL	♦DIC	
GSE	IDC	
INRB	♦INRC	
INRI	INRJ	
MSC	PWC	
SAR	SEN	
SES	TNC	
UNI	USS	
1N4765	♦△MOTA	185 - 8
CODI	♦CRL	
DIC	GSE	
IDC	♦MSC	
SAR	SCN	
1N4765A	♦△MOTA	185 - 9
CODI	♦CRL	
DIC	IDC	
	♦MSC	
1N4765B	CODI	184-197
IDC	♦MSC	
1N4766	♦△MOTA	185 - 10
CODI	♦CRL	
DIC	GSE	
IDC	♦MSC	
SAR	SCN	
1N4766A	♦△MOTA	185 - 11
CODI	♦CRL	
DIC	IDC	
	♦MSC	
1N4766B	CODI	184-198
IDC	♦MSC	
1N4767	♦△MOTA	185 - 12
CODI	CRL	
DIC	GSE	
IDC	♦MSC	
SAR	SCN	
1N4767A	♦△MOTA	185 - 13
CODI	♦CRL	
DIC	IDC	
	♦MSC	
1N4767B	CODI	184-199
IDC	♦MSC	
1N4768	♦△MOTA	185 - 14
CODI	♦CRL	
DIC	GSE	
IDC	♦MSC	
	SCN	
1N4768A	♦△MOTA	185 - 15
CODI	♦CRL	
DIC	IDC	
	♦MSC	
1N4768B	CODI	184-200
IDC	♦MSC	
1N4769	♦△MOTA	185 - 16
CODI	♦CRL	
DIC	GSE	
IDC	♦MSC	
	SCN	
1N4769A	♦△MOTA	185 - 17
CODI	♦CRL	
DIC	IDC	
	♦MSC	
1N4769B	CODI	184-201
IDC	♦MSC	
1N4770	♦△MOTA	185 - 18
CODI	♦CRL	
DIC	GSE	
IDC	♦MSC	
SCN	TNC	
1N4770A	♦△MOTA	185 - 19

cont next col.

TYPE No.	MFRS	Pg&Line
1N4770A (cont.)	CODI	
♦CRL	DIC	
IDC	♦MSC	
	TNC	
1N4770B	CODI	184-202
IDC	♦MSC	
1N4771	♦△MOTA	185 - 20
CODI	♦CRL	
DIC	GSE	
IDC	♦MSC	
SCN	TNC	
1N4771A	♦△MOTA	185 - 21
CODI	♦CRL	
DIC	IDC	
♦MSC	TNC	
1N4771B	CODI	184-203
IDC	♦MSC	
1N4772	♦△MOTA	185 - 22
CODI	♦CRL	
DIC	GSE	
IDC	♦MSC	
	TNC	
1N4772A	♦△MOTA	185 - 23
CODI	♦CRL	
DIC	IDC	
♦MSC	TNC	
1N4772B	CODI	184-204
IDC	♦MSC	
1N4773	♦△MOTA	185 - 24
CODI	♦CRL	
DIC	GSE	
IDC	♦MSC	
	TNC	
1N4773A	♦△MOTA	185 - 25
CODI	♦CRL	
DIC	IDC	
♦MSC	TNC	
1N4773B	CODI	184-205
IDC	♦MSC	
1N4774	♦△MOTA	185 - 26
CODI	♦CRL	
DIC	GSE	
IDC	♦MSC	
1N4774A	♦△MOTA	185 - 27
CODI	♦CRL	
DIC	IDC	
	♦MSC	
1N4774B	CODI	184-206
IDC	♦MSC	
1N4775	♦△MOTA	183-176
CODI	♦CRL	
DIC	GSE	
IDC	♦MSC	
	TSC	
1N4775A	♦△MOTA	183-177
CODI	♦CRL	
DIC	IDC	
♦MSC	TSC	
1N4775B	CODI	183-165
IDC	♦MSC	
1N4776	♦△MOTA	183-178
CODI	♦CRL	
DIC	GSE	
IDC	♦MSC	
	TSC	
1N4776A	♦△MOTA	183-179
CODI	♦CRL	
DIC	IDC	
♦MSC	TSC	
1N4776B	CODI	183-166
IDC	♦MSC	
1N4777	♦△MOTA	183-180
CODI	♦CRL	
DIC	GSE	
IDC	♦MSC	
	TSC	
1N4777A	♦△MOTA	183-181
CODI	♦CRL	
DIC	IDC	
♦MSC	TSC	
1N4777B	CODI	183-167
IDC	♦MSC	
1N4778	♦△MOTA	183-182
CODI	♦CRL	
DIC	GSE	
IDC	♦MSC	
	TSC	
1N4778A	♦△MOTA	183-183
CODI	♦CRL	
DIC	IDC	
♦MSC	TSC	
1N4778B	CODI	183-168
IDC	♦MSC	
1N4779	♦△MOTA	183-184
CODI	♦CRL	
DIC	GSE	
IDC	♦MSC	
	TSC	
1N4779A	CODI	183-185
♦CRL	DIC	
IDC	♦MOTA	
♦MSC	TSC	
1N4779B	CODI	183-169
IDC	♦MSC	
1N4780	♦△MOTA	183-186
CODI	♦CRL	
DIC	GSE	
IDC	♦MSC	
TNC	TSC	
1N4780A	♦△MOTA	183-187
CODI	♦CRL	
DIC	IDC	

cont next page

△-Registered with JEDEC by this manufacturer

♦-Copy of mfr's data sheet may be ordered from D.A.T.A.

1. TYPE No. CROSS INDEX

IN TYPE NUMBER SEQUENCE

TYPE No.	MFRS	Pg&Line
1N4780A		
(cont)	♦MSC	
TNC	TSC	
1N4780B	CODI	183-170
IDC	♦MSC	
1N4781	♦△MOTA	183-188
CODI	♦CRL	
DIC	GSE	
IDC	♦MSC	
TNC	TSC	
1N4781A	♦△MOTA	183-189
CODI	♦CRL	
DIC	IDC	
♦MSC	TNC	
	TSC	
1N4781B	CODI	183-171
IDC	♦MSC	
1N4782	♦△MOTA	183-190
CODI	♦CRL	
DIC	GSE	
IDC	TSC	
1N4782A	CODI	183-191
♦CRL	DIC	
IDC	♦MOTA	
♦MSC	TNC	
	TSC	
1N4782B	CODI	183-172
IDC	♦MSC	
1N4783	♦△MOTA	183-192
CODI	♦CRL	
DIC	GSE	
IDC	♦MSC	
TNC	TSC	
1N4783A	♦△MOTA	183-193
CODI	♦CRL	
DIC	IDC	
♦MSC	TNC	
	TSC	
1N4783B	CODI	183-173
IDC	♦MSC	
1N4784	♦△MOTA	183-194
CODI	♦CRL	
DIC	GSE	
IDC	♦MSC	
	TSC	
1N4784A	♦△MOTA	183-195
CODI	♦CRL	
DIC	IDC	
♦MSC	TSC	
1N4784B	CODI	183-174
IDC	♦MSC	
1N4785	ATEI	259- 3
1N4786,A,B,C,D		536- 23
△TRW	CODI	
♦CRY	EAS	
	KSC	
1N4787,A,B,C,D		538-108
△TRW	CODI	
♦CRY	EAS	
	KSC	
1N4788	EAS	539- 99
1N4788,A,B,C,D		539-100
△TRW	CODI	
♦CRY	EAS	
	KSC	
1N4789,A,B,C,D		543- 23
△TRW	CODI	
♦CRY	KSC	
1N4790,A,B,C,D		544- 61
△TRW	CODI	
♦CRY	EAS	
	KSC	
1N4791,A,B,C,D		547- 71
△TRW	CODI	
♦CRY	EAS	
	KSC	
1N4792,A,B,C,D		549- 31
△TRW	CODI	
♦CRY	EAS	
	KSC	
1N4793,A,B,C,D		552- 10
△TRW	CODI	
♦CRY	EAS	
	KSC	
1N4794,A,B,C,D		553- 26
△TRW	CODI	
♦CRY	EAS	
	KSC	
1N4795,A,B,C,D		555- 90
△TRW	CODI	
♦CRY	EAS	
	KSC	
1N4796,A,B,C,D		556- 77
△TRW	CODI	
♦CRY	EAS	
	KSC	
1N4797,A,B,C,D		559- 11
CODI	♦CRY	
EAS	KSC	
	TRW	
1N4798,A,B,C,D		560- 4
△TRW	CODI	
♦CRY	EAS	
	KSC	
1N4799,A,B,C,D		561- 16
△TRW	CODI	
♦CRY	EAS	
	KSC	
1N4800,A,B,C,D		561- 90
△TRW	CODI	
♦CRY	EAS	
	KSC	
1N4801,A,B,C,D		536- 24
cont next col		

TYPE No.	MFRS	Pg&Line
1N4801,A,B,C,D		
(cont)	△TRW	
CODI	♦CRY	
EAS	KSC	
JAN1N4801A,B	TRW	536- 25
1N4802,A,B,C,D		538-109
△TRW	CODI	
♦CRY	EAS	
	KSC	
JAN1N4802A,B	TRW	539- 1
1N4803,A,B,C,D		539-101
△TRW	CODI	
♦CRY	EAS	
	KSC	
JAN1N4803A,B	TRW	539-102
1N4804,A,B,C,D		543- 24
△TRW	CODI	
♦CRY	EAS	
	KSC	
JAN1N4804A,B	TRW	543- 25
1N4805,A,B,C,D		544- 62
△TRW	CODI	
♦CRY	EAS	
	KSC	
JAN1N4805A,B	TRW	544- 63
1N4806,A,B,C,D		547- 72
△TRW	CODI	
♦CRY	EAS	
KSC	SOD	
JAN1N4806A,B	TRW	547- 73
1N4807,A,B,C,D		549- 32
△TRW	CODI	
♦CRY	EAS	
	KSC	
JAN1N4807A,B	TRW	549- 33
1N4808,A,B,C,D		552- 11
△TRW	CODI	
♦CRY	EAS	
	KSC	
JAN1N4808A,B	TRW	552- 12
1N4809,A,B,C,D		553- 27
△TRW	CODI	
♦CRY	EAS	
	KSC	
JAN1N4809A,B	TRW	553- 28
1N4810,A,B,C,D		555- 91
△TRW	CODI	
♦CRY	EAS	
	KSC	
JAN1N4810A,B	TRW	555- 92
1N4811,A,B,C,D		556- 78
△TRW	CODI	
♦CRY	EAS	
	KSC	
JAN1N4811A,B	TRW	556- 79
1N4812,A,B,C,D		559- 12
△TRW	CODI	
♦CRY	EAS	
	KSC	
JAN1N4812A,B	TRW	559- 13
1N4813,A,B,C,D		560- 5
△TRW	CODI	
♦CRY	EAS	
	KSC	
JAN1N4813A,B	TRW	560- 6
1N4814,A,B,C,D		561- 17
△TRW	CODI	
♦CRY	EAS	
	KSC	
JAN1N4814A,B	TRW	561- 18
1N4815,A,B,C,D		561- 91
△TRW	CODI	
♦CRY	EAS	
	KSC	
JAN1N4815A,B	CRY	561- 92
	TRW	
1N4816	△WESY	294- 92
BNT	DII	
EDL	ETC	
IDC	INRB	
INRC	INRI	
INRJ	PWC	
QUA	SCN	
SCO	SEN	
SES	SOD	
SSI	TEK	
	UPI	
1N4817	△WESY	301- 99
BNT	DII	
EDL	ETC	
IDC	INRB	
INRC	INRI	
INRJ	PWC	
QUA	SCN	
SCO	SEN	
SES	SOD	
SSI	TEK	
	UPI	
1N4818	△WESY	312- 98
DII	EDL	
ETC	IDC	
INRB	INRC	
INRI	INRJ	
PWC	QUA	
SCN	SCO	
SEN	SES	
SOD	SSI	
TEK	UPI	
1N4819	△WESY	322- 56
BNT	DII	
EDL	ETC	
INRB	INRC	
INRI	INRJ	
cont next col		

TYPE No.	MFRS	Pg&Line
1N4819		
(cont)	PWC	
QUA	SCN	
SCO	SEN	
SES	SOD	
SSI	TEK	
	UPI	
1N4820	△WESY	331- 83
BNT	DII	
EDL	ETC	
IDC	INRB	
INRC	INRI	
INRJ	PWC	
QUA	SCN	
SCO	SEN	
SES	SOD	
SSI	TEK	
	UPI	
1N4821	△WESY	341- 22
BNT	DII	
EDL	ETC	
IDC	INRB	
INRC	INRI	
INRJ	PWC	
QUA	SCN	
SCO	SEN	
SES	SOD	
SSI	TEK	
	UPI	
1N4822	△WESY	348-107
BNT	DII	
EDL	♦ETC	
IDC	INRB	
INRC	INRI	
INRJ	PWC	
QUA	SCN	
SCO	SEN	
SES	SOD	
SSI	TEK	
1N4823	△WESY	278- 68
SEN	SSI	
1N4824	△WESY	282- 21
SEN	SSI	
1N4825	SEN	284-108
SSI	WESY	
1N4826	SEN	286- 77
	SSI	
1N4827	IDC	267- 95
SOD	SSI	
1N4828	△GESY	248- 41
CODI	IDC	
SSI	TSC	
	UPI	
1N4829	♦△GESY	248- 44
APD	CODI	
♦EAS	IDC	
SSI	UPI	
1N4830	♦△GESY	248- 46
APD	CODI	
♦EAS	IDC	
SSI	UPI	
1N4831,A,B	DIC	186- 63
GSE	IDC	
SCN	SSI	
	UNI	
1N4832,A,B	DIC	188-147
GSE	IDC	
SCN	SSI	
	UNI	
1N4833,A,B	DIC	190-133
GSE	IDC	
SCN	SSI	
	UNI	
1N4834,A,B	DIC	193- 39
GSE	IDC	
SCN	SSI	
	UNI	
1N4835,A,B	DIC	195- 72
GSE	IDC	
SCN	SSI	
	UNI	
1N4836,A,B	DIC	198- 43
GSE	IDC	
SCN	SSI	
	UNI	
1N4837,A,B	DIC	200- 21
GSE	IDC	
SCN	SSI	
	UNI	
1N4838,A,B	DIC	202-135
GSE	IDC	
SCN	SSI	
	UNI	
1N4839,A,B	DIC	205- 74
GSE	IDC	
SCN	SSI	
	UNI	
1N4840,A,B	DIC	207- 59
GSE	IDC	
SCN	SSI	
	UNI	
1N4841,A,B	DIC	209- 39
GSE	IDC	
SCN	SSI	
	UNI	
1N4842,A,B	DIC	211-123
GSE	IDC	
SCN	SSI	
	UNI	
1N4843,A,B	DIC	213-120
GSE	IDC	
SCN	SSI	
	UNI	
1N4844,A,B	DIC	215- 87
cont next col		

TYPE No.	MFRS	Pg&Line
1N4844,A,B		
(cont.)	GSE	
IDC	SCN	
SSI	UNI	
1N4845,A,B	DIC	216-184
GSE	IDC	
SCN	SSI	
	UNI	
1N4846,A,B	DIC	218- 80
GSE	IDC	
SCN	SSI	
	UNI	
1N4847,A,B	DIC	219-156
GSE	IDC	
SCN	SSI	
	UNI	
1N4848,A,B	DIC	221- 98
GSE	IDC	
SCN	SSI	
	UNI	
1N4849,A,B	DIC	223- 45
GSE	IDC	
SCN	SSI	
	UNI	
1N4850,A,B	DIC	224-130
GSE	IDC	
SCN	SSI	
	UNI	
1N4851,A,B	DIC	226- 76
GSE	IDC	
SCN	SSI	
	UNI	
1N4852,A,B	DIC	227-135
GSE	IDC	
SCN	SSI	
	UNI	
1N4853,A,B	DIC	229- 50
GSE	IDC	
SCN	SSI	
	UNI	
1N4854,A,B	DIC	230-129
GSE	IDC	
SCN	SSI	
	UNI	
1N4855,A,B	DIC	232- 64
GSE	IDC	
SCN	SSI	
	UNI	
1N4856,A,B	DIC	233-112
GSE	IDC	
SCN	SSI	
	UNI	
1N4857,A,B	DIC	235- 75
GSE	IDC	
SCN	SSI	
	UNI	
1N4858,A,B	DIC	236-100
GSE	IDC	
SCN	SSI	
	UNI	
1N4859,A,B	DIC	237-136
GSE	IDC	
SCN	SSI	
	UNI	
1N4860,A,B	DIC	239-116
GSE	IDC	
SCN	SSI	
	UNI	
1N4861	△GESY	269- 81
APD	IDC	
	QUA	
1N4862	△GESY	274- 59
APD	IDC	
1N4863	△GESY	274- 38
GIC	IDC	
QUA	TSC	
1N4864	△GESY	280- 67
GIC	IDC	
QUA	SSI	
	TSC	
1N4865	△INRC	261- 7
EDI	IDC	
INRB	INRI	
INRJ	SOD	
	SSI	
1N4866	△INRC	261- 37
EDI	IDC	
INRB	INRI	
INRJ	SOD	
	SSI	
1N4867	△INRC	261- 48
EDI	IDC	
INRB	INRI	
INRJ	SOD	
	SSI	
1N4868	△INRC	261- 60
EDI	IDC	
INRB	INRI	
INRJ	SOD	
	SSI	
1N4869	△INRC	261- 65
EDI	IDC	
INRB	INRI	
INRJ	SOD	
	SSI	
1N4870	△INRC	261- 69
EDI	IDC	
INRB	INRI	
INRJ	SOD	
	SSI	
1N4871	△INRC	261- 71
EDI	IDC	
INRB	INRI	
cont next col		

TYPE No.	MFRS	Pg&Line
1N4871		
(cont)	INRJ	
SOD	SSI	
1N4872	△INRC	261- 72
EDI	IDC	
INRB	INRI	
INRJ	SOD	
	SSI	
1N4873	△INRC	261- 73
EDI	IDC	
INRB	INRI	
INRJ	SOD	
	SSI	
1N4874	△INRC	261- 74
EDI	IDC	
INRB	INRI	
INRJ	SOD	
	SSI	
1N4875	△INRC	261- 75
EDI	IDC	
INRB	INRI	
INRJ	SOD	
	SSI	
1N4876	△INRC	261- 76
EDI	IDC	
INRB	INRI	
INRJ	SOD	
	SSI	
1N4877	△INRC	261- 77
EDI	IDC	
INRB	INRI	
INRJ	SOD	
	SSI	
1N4878	△SYN	305-110
EDL	IDC	
SES	SSI	
	TNC	
1N4879	△SYN	306- 30
EDL	ETC	
IDC	SES	
SSI	TNC	
1N4880	△SYN	306- 67
EDL	ETC	
IDC	SES	
SSI	TNC	
1N4881	△UNI	205-115
CRL	IDC	
MSC	TRW	
1N4882	△UNI	217- 25
CRL	IDC	
MSC	TRW	
1N4883	△UNI	193- 83
CRL	IDC	
MSC	TRW	
1N4884	△UNI	205-116
CRL	IDC	
MSC	TRW	
1N4885	△APX	519- 28
IDC	PHIC	
1N4886	△APX	519- 29
1N4887	△INRC	261- 78
EDI	INRB	
INRI	INRJ	
	SOD	
1N4888	△GESY	262- 1
	IDC	
1N4889	△UNI	226-117
	TRW	
1N4890	♦△DIC	175-169
CODI	IDC	
KSC	MOTA	
♦MSC	SDI	
TEC	TSC	
	♦USS	
1N4890A	♦△DIC	175-170
CODI	IDC	
KSC	MOTA	
SDI	TEC	
TSC	♦USS	
1N4891	♦△DIC	175-171
CODI	IDC	
MOTA	♦MSC	
SDI	TEC	
TSC	♦USS	
1N4891A	♦△DIC	175-172
CODI	IDC	
MOTA	SDI	
TEC	TSC	
	♦USS	
1N4892	♦△DIC	175-173
CODI	IDC	
KSC	MOTA	
♦MSC	SDI	
TEC	TSC	
	♦USS	
1N4892A	♦△DIC	175-174
CODI	IDC	
KSC	MOTA	
SDI	TEC	
TSC	♦USS	
1N4893	♦△DIC	175-175
CODI	IDC	
MOTA	♦MSC	
SDI	TEC	
TSC	♦USS	
1N4893A	♦△DIC	175-176
CODI	IDC	
MOTA	SDI	
TEC	TSC	
	♦USS	
1N4894	♦△DIC	175-177
CODI	IDC	
KSC	MOTA	
cont next page		

△-Registered with JEDEC by this manufacturer

♦-Copy of mfr's data sheet may be ordered from D.A.T.A.

1. TYPE No. CROSS INDEX

IN TYPE NUMBER SEQUENCE

TYPE No.	MFRS	Pg&Line
1N4894		
(cont)	♦MSC	
SDI	TEC	
TSC	♦USS	
1N4894A	♦△DIC	175-178
CODI	IDC	
KSC	MOTA	
SDI	TEC	
TSC	♦USS	
1N4895	♦△DIC	175-179
CODI	IDC	
MOTA	♦MSC	
SDI	TEC	
TSC	♦USS	
1N4895A	♦△DIC	175-180
CODI	IDC	
MOTA	SDI	
TEC	TSC	
	♦USS	
1N4896	♦△DIC	194-13
CODI	IDC	
♦MOTA	SDI	
1N4896A	♦△DIC	194-14
CODI	IDC	
♦MOTA	SDI	
1N4897	♦△DIC	194-15
CODI	IDC	
♦MOTA	SDI	
1N4897A	♦△DIC	194-16
CODI	IDC	
♦MOTA	SDI	
1N4898	♦△DIC	194-17
CODI	IDC	
♦MOTA	SDI	
1N4898A	♦△DIC	194-18
CODI	IDC	
♦MOTA	SDI	
1N4899	♦△DIC	194-19
CODI	IDC	
♦MOTA	SDI	
1N4899A	♦△DIC	194-20
CODI	IDC	
♦MOTA	SDI	
1N4900	♦△DIC	194-21
CODI	IDC	
♦MOTA	SDI	
1N4900A	♦△DIC	194-22
CODI	IDC	
♦MOTA	SDI	
1N4901	♦△DIC	194-23
CODI	IDC	
♦MOTA	SDI	
1N4901A	♦△DIC	194-24
CODI	IDC	
♦MOTA	SDI	
1N4902	♦△DIC	194-25
CODI	IDC	
♦MOTA	SDI	
1N4902A	♦△DIC	194-26
CODI	IDC	
♦MOTA	SDI	
1N4903	♦△DIC	194-27
CODI	IDC	
♦MOTA	SDI	
1N4903A	♦△DIC	194-28
CODI	IDC	
♦MOTA	SDI	
1N4904	♦△DIC	194-29
CODI	IDC	
♦MOTA	SDI	
1N4904A	♦△DIC	194-30
CODI	IDC	
♦MOTA	SDI	
1N4905	♦△DIC	194-31
CODI	IDC	
♦MOTA	SDI	
1N4905A	♦△DIC	194-32
CODI	IDC	
♦MOTA	SDI	
1N4906	CODI	194-33
♦DIC	IDC	
♦MOTA	SDI	
1N4906A	♦△DIC	194-34
CODI	IDC	
♦MOTA	SDI	
1N4907	♦△DIC	194-35
CODI	IDC	
♦MOTA	SDI	
1N4907A	♦△DIC	194-36
CODI	IDC	
♦MOTA	SDI	
1N4908	♦△DIC	194-37
CODI	IDC	
♦MOTA	SDI	
1N4908A	CODI	194-38
♦DIC	IDC	
♦MOTA	SDI	
1N4909	♦△DIC	194-39
CODI	IDC	
♦MOTA	SDI	
1N4909A	♦△DIC	194-40
CODI	IDC	
♦MOTA	SDI	
1N4910	♦△DIC	194-41
CODI	IDC	
♦MOTA	SDI	
1N4910A	♦△DIC	194-42
CODI	IDC	
♦MOTA	SDI	
1N4911	CODI	194-43
♦DIC	IDC	
♦MOTA	SDI	
1N4911A	♦△DIC	194-44
cont next col		

TYPE No.	MFRS	Pg&Line
1N4911A		
(cont)	CODI	
IDC	♦MOTA	
	SDI	
1N4912	♦△DIC	194-45
CODI	IDC	
♦MOTA	SDI	
1N4912A	♦△DIC	194-46
CODI	IDC	
♦MOTA	SDI	
1N4913	♦△DIC	194-47
CODI	IDC	
♦MOTA	SDI	
1N4913A	CODI	194-48
♦DIC	IDC	
♦MOTA	SDI	
1N4914	♦△DIC	194-49
CODI	IDC	
♦MOTA	SDI	
1N4914A	♦△DIC	194-50
CODI	IDC	
♦MOTA	SDI	
1N4915	♦△DIC	194-51
CODI	IDC	
♦MOTA	SDI	
1N4915A	♦△DIC	194-52
CODI	IDC	
♦MOTA	SDI	
1N4916	♦△DIC	204-35
CODI	IDC	
♦MOTA	SDI	
1N4916A	♦△DIC	204-36
CODI	IDC	
♦MOTA	SDI	
1N4917	♦△DIC	204-37
CODI	IDC	
♦MOTA	SDI	
1N4917A	♦△DIC	204-38
CODI	IDC	
♦MOTA	SDI	
1N4918	♦△DIC	204-39
CODI	IDC	
♦MOTA	SDI	
1N4918A	♦△DIC	204-40
CODI	IDC	
♦MOTA	SDI	
1N4919	♦△DIC	204-41
CODI	IDC	
♦MOTA	SDI	
1N4919A	♦△DIC	204-42
CODI	IDC	
♦MOTA	SDI	
1N4920	♦△DIC	204-43
CODI	IDC	
♦MOTA	SDI	
1N4920A	♦△DIC	204-44
CODI	IDC	
♦MOTA	SDI	
1N4921	♦△DIC	204-45
CODI	IDC	
♦MOTA	SDI	
1N4921A	CODI	204-46
♦DIC	IDC	
♦MOTA	SDI	
1N4922	♦△DIC	204-47
CODI	IDC	
♦MOTA	SDI	
1N4922A	♦△DIC	204-48
CODI	IDC	
♦MOTA	SDI	
1N4923	♦△DIC	204-49
CODI	IDC	
♦MOTA	SDI	
	SSI	
1N4923A	♦△DIC	204-50
CODI	IDC	
♦MOTA	SDI	
1N4924	♦△DIC	204-51
CODI	IDC	
♦MOTA	SDI	
1N4924A	♦△DIC	204-52
CODI	IDC	
♦MOTA	SDI	
1N4925	♦△DIC	204-53
CODI	IDC	
♦MOTA	SDI	
1N4925A	♦△DIC	204-54
CODI	IDC	
♦MOTA	SDI	
1N4926	♦△DIC	204-55
CODI	IDC	
♦MOTA	SDI	
1N4926A	♦△DIC	204-56
CODI	IDC	
♦MOTA	SDI	
1N4927	CODI	204-57
♦DIC	IDC	
♦MOTA	SDI	
1N4927A	♦△DIC	204-58
CODI	IDC	
♦MOTA	SDI	
1N4928	♦△DIC	204-59
CODI	IDC	
♦MOTA	SDI	
1N4928A	♦△DIC	204-60
CODI	IDC	
♦MOTA	SDI	
1N4929	♦△DIC	204-61
CODI	IDC	
♦MOTA	SDI	
1N4929A	♦△DIC	204-62
CODI	IDC	
♦MOTA	SDI	

TYPE No.	MFRS	Pg&Line
1N4930	♦△DIC	204-63
CODI	IDC	
♦MOTA	SDI	
1N4930A	♦△DIC	204-64
CODI	IDC	
♦MOTA	SDI	
1N4931	♦△DIC	204-65
CODI	IDC	
♦MOTA	SDI	
1N4931A	♦△DIC	204-66
CODI	IDC	
♦MOTA	SDI	
1N4932	♦△DIC	204-67
CODI	IDC	
♦MOTA	SDI	
1N4932A	CODI	204-68
♦DIC	IDC	
♦MOTA	SDI	
1N4933	♦△DIC	272-49
GIC	IDC	
♦MOTA	SCN	
	SSI	
1N4934	♦△DIC	278-110
GIC	♦MOTA	
SCN	SSI	
1N4935	♦△DIC	282-68
GIC	IDC	
♦MOTA	SCN	
	SSI	
1N4936	♦△DIC	285-41
GIC	IDC	
♦MOTA	SCN	
	SSI	
1N4937	♦△DIC	286-94
GIC	IDC	
♦MOTA	SCN	
	SSI	
1N4938	△TII	281-106
IDC	SSI	
	TSC	
JAN1N4938	TII	281-59
	TSC	
1N4939	△MULB	516-51
1N4940	△MULB	512-58
1N4941	△MULB	523-58
1N4942	△SET	282-43
EDI	GIC	
IDC	MSC	
SCN	SSI	
	UNI	
JAN1N4942	MSC	282-44
SET	UNI	
1N4943	△SET	284-31
GIC	IDC	
MSC	SCN	
	SSI	
1N4944	△SET	285-16
EDI	GIC	
IDC	MSC	
SCN	SSI	
	UNI	
JAN1N4944	MSC	285-17
SET	UNI	
1N4945	△SET	286-31
GIC	IDC	
MSC	SCN	
	SSI	
1N4946	△SET	287-4
EDI	GIC	
IDC	MSC	
SCN	SSI	
	UNI	
JAN1N4946	MSC	286-87
SET	UNI	
1N4947	△SET	287-80
EDI	GIC	
IDC	MSC	
SCN	SSI	
JAN1N4947	MSC	287-81
	SET	
1N4948	△SET	288-34
EDI	GIC	
IDC	MSC	
SCN	SSI	
JAN1N4948	MSC	288-35
	SET	
1N4949	△HPA	268-30
IDC	INRC	
1N4950	♦△FSC	247-46
IDC	TSC	
	UPI	
1N4951	△GESY	246-109
AEIL	UPI	
1N4952	△GESY	249-82
AEIL	UPI	
1N4953	△HPA	267-21
1N4954	△UNI	178-91
♦CRL	MSC	
SEN	TRW	
JAN1N4954	MSC	178-92
	UNI	
1N4955	△UNI	180-134
♦CRL	MSC	
SEN	TRW	
JAN1N4955	MSC	180-135
	UNI	
1N4956	△UNI	183-2
♦CRL	MSC	
SEN	TRW	
JAN1N4956	MSC	183-3
	UNI	
1N4957	△UNI	186-118
♦CRL	MSC	
SEN	TRW	

TYPE No.	MFRS	Pg&Line
JAN1N4957	MSC	186-119
	UNI	
1N4958	△UNI	189-16
♦CRL	MSC	
SEN	TRW	
JAN1N4958	MSC	189-17
	UNI	
1N4959	△UNI	191-6
♦CRL	MSC	
SEN	TRW	
JAN1N4959	MSC	191-7
	UNI	
1N4960	△UNI	193-105
CRL	MSC	
SEN	TRW	
JAN1N4960	MSC	193-106
	UNI	
1N4960D	△UNI	193-107
MSC	TRW	
1N4961	△UNI	195-130
♦CRL	MSC	
SEN	TRW	
JAN1N4961	MSC	195-131
	UNI	
1N4962	△UNI	198-106
♦CRL	MSC	
SEN	TRW	
JAN1N4962	MSC	198-107
	UNI	
1N4963	△UNI	200-76
♦CRL	MSC	
SEN	TRW	
JAN1N4963	MSC	200-77
	UNI	
1N4964	△UNI	202-198
♦CRL	MSC	
SEN	TRW	
JAN1N4964	MSC	202-199
	UNI	
1N4965	△UNI	205-135
♦CRL	MSC	
SEN	TRW	
JAN1N4965	MSC	205-136
	UNI	
1N4966	△UNI	207-121
♦CRL	MSC	
SEN	TRW	
JAN1N4966	MSC	207-122
	UNI	
1N4967	△UNI	209-97
♦CRL	MSC	
SEN	TRW	
JAN1N4967	MSC	209-98
	UNI	
1N4968	△UNI	211-188
♦CRL	MSC	
SEN	TRW	
JAN1N4968	MSC	211-189
	UNI	
1N4969	△UNI	213-181
♦CRL	MSC	
SEN	TRW	
JAN1N4969	MSC	213-182
	UNI	
1N4970	△UNI	215-152
♦CRL	MSC	
SEN	TRW	
JAN1N4970	UNI	215-153
1N4971	△UNI	217-46
♦CRL	MSC	
SEN	TRW	
JAN1N4971	UNI	217-47
1N4972	♦CRL	218-123
MSC	SEN	
TRW	UNI	
JAN1N4972	UNI	218-124
1N4973	△UNI	220-15
♦CRL	MSC	
SEN	TRW	
JAN1N4973	UNI	220-16
1N4974	△UNI	221-145
♦CRL	MSC	
SEN	TRW	
JAN1N4974	UNI	221-146
1N4975	△UNI	223-86
♦CRL	MSC	
SEN	TRW	
JAN1N4975	UNI	223-87
1N4976	△UNI	224-177
♦CRL	MSC	
SEN	TRW	
JAN1N4976	UNI	224-178
1N4977	△UNI	226-118
♦CRL	MSC	
SEN	TRW	
JAN1N4977	UNI	226-119
1N4978	△UNI	227-180
♦CRL	MSC	
SEN	TRW	
JAN1N4978	UNI	227-181
1N4979	△UNI	229-94
♦CRL	MSC	
	SEN	
JAN1N4979	UNI	229-95
1N4980	△UNI	230-170
♦CRL	MSC	
SEN	TRW	
JAN1N4980	UNI	230-171
1N4981	△UNI	232-102
♦CRL	MSC	
SEN	TRW	
JAN1N4981	UNI	232-103
1N4982	△UNI	233-156
cont next col		

TYPE No.	MFRS	Pg&Line
1N4982		
(cont)	♦CRL	
MSC	SEN	
	TRW	
JAN1N4982	UNI	233-157
1N4983	♦CRL	235-109
MSC	SEN	
TRW	UNI	
JAN1N4983	UNI	235-110
1N4984	△UNI	236-141
♦CRL	MSC	
SEN	TRW	
JAN1N4984	UNI	236-142
1N4985	△UNI	238-1
♦CRL	MSC	
SEN	TRW	
JAN1N4985	UNI	238-2
1N4986	△UNI	239-154
♦CRL	MSC	
SEN	TRW	
JAN1N4986	UNI	239-155
1N4987	△UNI	240-168
♦CRL	MSC	
SEN	TRW	
JAN1N4987	UNI	240-169
1N4988	△UNI	242-115
♦CRL	MSC	
SEN	TRW	
JAN1N4988	UNI	242-116
1N4989	△UNI	243-152
♦CRL	MSC	
	TRW	
JAN1N4989	UNI	243-153
1N4990	△UNI	244-60
CRL	MSC	
	TRW	
JAN1N4990	UNI	244-61
1N4991	△UNI	244-80
MSC	TRW	
JAN1N4991	UNI	244-81
1N4992	△UNI	244-110
MSC	TRW	
JAN1N4992	UNI	244-111
1N4993	△UNI	244-133
MSC	TRW	
JAN1N4993	UNI	244-134
1N4994	△UNI	244-163
MSC	TRW	
JAN1N4994	UNI	244-164
1N4995	△UNI	244-186
MSC	TRW	
JAN1N4995	UNI	244-187
1N4996	△UNI	245-10
MSC	TRW	
JAN1N4996	none	245-11
1N4997	IDC	295-65
MOTA	SSI	
	TRW	
1N4998	IDC	302-102
♦MOTA	SSI	
1N4999	♦MOTA	314-2
	SSI	
1N5000	♦MOTA	332-103
	SSI	
1N5001	♦MOTA	350-10
	SSI	
1N5002	♦MOTA	362-73
	SSI	
1N5003	♦MOTA	372-83
	SSI	
1N5004	IDC	300-92
QUA	SSI	
1N5005	IDC	311-77
QUA	SSI	
1N5006	IDC	330-60
QUA	SSI	
1N5007	IDC	347-88
QUA	SSI	
1N5008,A	♦△DIC	167-79
GSE	IDC	
1N5009,A	♦△DIC	168-39
GSE	IDC	
1N5010,A	♦△DIC	169-2
GSE	IDC	
1N5011,A	♦△DIC	169-193
GSE	IDC	
1N5012,A	♦△DIC	171-9
GSE	IDC	
1N5013,A	♦△DIC	172-44
GSE	IDC	
1N5014,A	♦△DIC	173-123
GSE	IDC	
1N5015,A	♦△DIC	175-100
GSE	IDC	
1N5016	♦△DIC	178-72
GSE	IDC	
SCN	UNI	
1N5016A	♦△DIC	178-73
GSE	IDC	
	UNI	
1N5017	♦△DIC	180-114
GSE	IDC	
SCN	UNI	
1N5017A	♦△DIC	180-115
GSE	IDC	
SCN	UNI	
1N5018	♦△DIC	182-167
GSE	IDC	
SCN	UNI	
1N5018A	♦△DIC	182-168
GSE	IDC	
SCN	UNI	
1N5019	♦△DIC	186-97
cont next page		

△-Registered with JEDEC by this manufacturer

♦-Copy of mfr's data sheet may be ordered from D.A.T.A.

1. TYPE No. CROSS INDEX

IN TYPE NUMBER SEQUENCE

TYPE No.	MFRS	Pg&Line
1N5019 (cont)	GSE	
IDC	SCN	
	UNI	
1N5019A	♦△DIC	186-98
GSE	IDC	
SCN	UNI	
1N5020	♦△DIC	188-187
GSE	IDC	
SCN	UNI	
1N5020A	♦△DIC	188-188
GSE	IDC	
SCN	UNI	
1N5021	♦△DIC	190-174
GSE	IDC	
SCN	UNI	
1N5021A	♦△DIC	190-175
GSE	IDC	
SCN	UNI	
1N5022	♦△DIC	193-80
GSE	IDC	
SCN	UNI	
1N5022A	♦△DIC	193-81
GSE	IDC	
SCN	UNI	
1N5023	♦△DIC	195-109
GSE	IDC	
SCN	UNI	
1N5023A	♦△DIC	195-110
GSE	IDC	
SCN	UNI	
1N5024	♦△DIC	196-109
GSE	IDC	
SCN	UNI	
1N5024A	♦△DIC	196-110
GSE	IDC	
SCN	UNI	
1N5025	♦△DIC	198-82
GSE	IDC	
SCN	UNI	
1N5025A	♦△DIC	198-83
GSE	IDC	
SCN	UNI	
1N5026	♦△DIC	200-56
GSE	IDC	
SCN	UNI	
1N5026A	♦△DIC	200-57
GSE	IDC	
SCN	UNI	
1N5027	♦△DIC	201-49
GSE	IDC	
SCN	UNI	
1N5027A	♦△DIC	201-50
GSE	IDC	
SCN	UNI	
1N5028	♦△DIC	202-172
GSE	IDC	
SCN	UNI	
1N5028A	♦△DIC	202-173
GSE	IDC	
SCN	UNI	
1N5029	♦△DIC	204-7
GSE	IDC	
SCN	UNI	
1N5029A	♦△DIC	204-8
GSE	IDC	
SCN	UNI	
1N5030	♦△DIC	205-112
GSE	IDC	
SCN	UNI	
1N5030A	♦△DIC	205-113
GSE	IDC	
SCN	UNI	
1N5031	♦△DIC	207-97
GSE	IDC	
SCN	UNI	
1N5031A	♦△DIC	207-98
GSE	IDC	
SCN	UNI	
1N5032	♦△DIC	209-75
GSE	IDC	
SCN	UNI	
1N5032A	♦△DIC	209-76
GSE	IDC	
SCN	UNI	
1N5033	♦△DIC	210-56
GSE	IDC	
SCN	UNI	
1N5033A	♦△DIC	210-57
GSE	IDC	
SCN	UNI	
1N5034	♦△DIC	211-163
GSE	IDC	
SCN	UNI	
1N5034A	♦△DIC	211-164
GSE	IDC	
SCN	UNI	
1N5035	♦△DIC	213-158
GSE	IDC	
SCN	UNI	
1N5035A	♦△DIC	213-159
GSE	IDC	
SCN	UNI	
1N5036	♦△DIC	215-126
GSE	IDC	
SCN	UNI	
1N5036A	♦△DIC	215-127
GSE	IDC	
SCN	UNI	
1N5037	♦△DIC	217-22
GSE	IDC	
SCN	UNI	
1N5037A	♦△DIC	217-23
cont.next col.		

TYPE No.	MFRS	Pg&Line
1N5037A (cont.)	GSE	
IDC	SCN	
	UNI	
1N5038	♦△DIC	218-103
GSE	IDC	
SCN	UNI	
1N5038A	♦△DIC	218-104
GSE	IDC	
SCN	UNI	
1N5039	♦△DIC	219-180
GSE	IDC	
SCN	UNI	
1N5039A	♦△DIC	219-181
GSE	IDC	
SCN	UNI	
1N5040	♦△DIC	220-108
GSE	IDC	
SCN	UNI	
1N5040A	♦△DIC	220-109
GSE	IDC	
SCN	UNI	
1N5041	♦△DIC	221-125
GSE	IDC	
SCN	UNI	
1N5041A	♦△DIC	221-126
GSE	IDC	
SCN	UNI	
1N5042	♦△DIC	222-78
GSE	IDC	
SCN	UNI	
1N5042A	♦△DIC	222-79
GSE	IDC	
SCN	UNI	
1N5043	♦△DIC	223-68
GSE	IDC	
SCN	UNI	
1N5043A	♦△DIC	223-69
GSE	IDC	
SCN	UNI	
1N5044	♦△DIC	223-171
GSE	IDC	
SCN	UNI	
1N5044A	♦△DIC	223-172
GSE	IDC	
SCN	UNI	
1N5045	♦△DIC	224-155
GSE	IDC	
SCN	UNI	
1N5045A	♦△DIC	224-156
GSE	IDC	
SCN	UNI	
1N5046	♦△DIC	226-99
GSE	IDC	
SCN	UNI	
1N5046A	♦△DIC	226-100
GSE	IDC	
SCN	UNI	
1N5047	♦△DIC	227-160
GSE	IDC	
SCN	UNI	
1N5047A	♦△DIC	227-161
GSE	IDC	
SCN	UNI	
1N5048	♦△DIC	229-73
GSE	IDC	
SCN	UNI	
1N5048A	♦△DIC	229-74
GSE	IDC	
SCN	UNI	
1N5049	♦△DIC	230-151
GSE	IDC	
SCN	UNI	
1N5049A	♦△DIC	230-152
GSE	IDC	
SCN	UNI	
1N5050	♦△DIC	232-85
GSE	IDC	
SCN	UNI	
1N5050A	♦△DIC	232-86
GSE	IDC	
SCN	UNI	
1N5051	♦△DIC	233-134
GSE	IDC	
SCN	UNI	
1N5051A	♦△DIC	233-135
GSE	IDC	
SCN	UNI	
1N5052	DII	356-8
ETC	IDC	
INRB	INRC	
INRI	INRJ	
QUA	SCN	
SCO	SEN	
SES	SOD	
TEK	UNI	
	WESY	
1N5053	DII	361-73
ETC	IDC	
INRB	INRC	
INRI	INRJ	
QUA	SCN	
SCO	SEN	
SES	SOD	
TEK	UNI	
	WESY	
1N5054	DII	371-102
ETC	IDC	
INRB	INRC	
INRI	INRJ	
QUA	SCN	
SCO	SEN	
SES	SOD	
cont next col		

TYPE No.	MFRS	Pg&Line
1N5054 (cont)	TEK	
UNI	WESY	
1N5055	ETC	300-93
♦GIC	IDC	
QUA	SCO	
UNI	UPI	
1N5056	ETC	311-78
♦GIC	IDC	
QUA	SCO	
UNI	UPI	
1N5057	♦GIC	321-58
IDC	QUA	
SCO	UNI	
	UPI	
1N5058	ETC	330-15
♦GIC	IDC	
QUA	SCO	
UNI	UPI	
1N5059	♦△GESY	312-13
GIC	IDC	
MSC	QUA	
SSI	UNI	
	UPI	
1N5060	♦△GESY	330-105
GIC	MSC	
QUA	SSI	
UNI	UPI	
1N5061	♦△GESY	348-22
GIC	MSC	
QUA	SSI	
	UNI	
1N5062	♦GESY	360-109
GIC	IDC	
MSC	QUA	
	SSI	
1N5063	△UNI	178-74
APD	CRL	
MSC	SEN	
	TRW	
1N5064	△UNI	180-117
APD	CRL	
MSC	SEN	
	TRW	
1N5065	△UNI	182-170
APD	CRL	
IDC	MSC	
SEN	TRW	
1N5066	△UNI	186-100
APD	CRL	
MSC	SEN	
	TRW	
1N5067	△UNI	188-190
APD	CRL	
MSC	SEN	
	TRW	
1N5068	△UNI	190-177
APD	CRL	
MSC	SEN	
	TRW	
1N5069	△UNI	195-111
APD	CRL	
MSC	SEN	
	TRW	
1N5070	△UNI	196-111
APD	CRL	
MSC	SEN	
	TRW	
1N5071	△UNI	198-84
APD	CRL	
MSC	SEN	
	TRW	
1N5072	△UNI	200-58
APD	CRL	
MSC	SEN	
	TRW	
1N5073	△UNI	202-175
APD	CRL	
MSC	SEN	
	TRW	
1N5074	△UNI	207-100
APD	CRL	
MSC	SEN	
	TRW	
1N5075	△UNI	209-77
APD	CRL	
MSC	SEN	
	TRW	
1N5076	△UNI	211-166
APD	CRL	
MSC	SEN	
	TRW	
1N5077	△UNI	213-161
APD	CRL	
MSC	SEN	
	TRW	
1N5078	△UNI	215-130
APD	CRL	
MSC	SEN	
	TRW	
1N5079	△UNI	217-26
CRL	MSC	
SEN	TRW	
1N5080	△UNI	218-106
CRL	MSC	
SEN	TRW	
1N5081	△UNI	218-198
CRL	MSC	
SEN	TRW	
1N5082	△UNI	219-182
CRL	MSC	
SEN	TRW	
1N5083	△UNI	220-110
cont next col		

TYPE No.	MFRS	Pg&Line
1N5083 (cont.)	CRL	
MSC	SEN	
	TRW	
1N5084	△UNI	221-128
CRL	MSC	
SEN	TRW	
1N5085	△UNI	222-81
CRL	MSC	
SEN	TRW	
1N5086	△UNI	223-71
CRL	MSC	
SEN	TRW	
1N5087	△UNI	224-157
CRL	MSC	
SEN	TRW	
1N5088	△UNI	225-123
CRL	MSC	
SEN	TRW	
1N5089	△UNI	226-102
CRL	MSC	
SEN	TRW	
1N5090	△UNI	227-163
CRL	MSC	
SEN	TRW	
1N5091	△UNI	228-80
CRL	MSC	
SEN	TRW	
1N5092	△UNI	229-76
CRL	MSC	
SEN	TRW	
1N5093	△UNI	229-192
CRL	MSC	
SEN	TRW	
1N5094	△UNI	230-153
CRL	MSC	
SEN	TRW	
1N5095	△UNI	232-87
CRL	MSC	
SEN	TRW	
1N5096	△UNI	235-93
CRL	MSC	
SEN	TRW	
1N5097	△UNI	236-123
CRL	MSC	
SEN	TRW	
1N5098	△UNI	237-154
CRL	MSC	
SEN	TRW	
1N5099	△UNI	238-130
CRL	MSC	
SEN	TRW	
1N5100	△UNI	240-152
CRL	MSC	
SEN	TRW	
1N5101	△UNI	241-63
CRL	MSC	
SEN	TRW	
1N5102	△UNI	242-97
CRL	MSC	
SEN	TRW	
1N5103	△UNI	243-4
CRL	MSC	
SEN	TRW	
1N5104	△UNI	243-136
CRL	MSC	
	TRW	
1N5105	△UNI	244-51
MSC	TRW	
1N5106	△UNI	244-73
MSC	TRW	
1N5107	△UNI	244-88
MSC	TRW	
1N5108	△UNI	244-106
MSC	TRW	
1N5109	△UNI	244-112
MSC	TRW	
1N5110	△UNI	244-126
MSC	TRW	
1N5111	△UNI	244-141
MSC	TRW	
1N5112	△UNI	244-159
MSC	TRW	
1N5113	△UNI	244-165
MSC	TRW	
1N5114	△UNI	244-179
MSC	TRW	
1N5115	△UNI	244-194
MSC	TRW	
1N5116	△UNI	245-6
MSC	TRW	
1N5117	△UNI	245-17
MSC	TRW	
1N5118	△UNI	196-123
♦CRL	MSC	
	TRW	
1N5119	△UNI	219-7
♦CRL	MSC	
	TRW	
1N5120	△UNI	220-121
♦CRL	MSC	
	TRW	
1N5121	△UNI	222-92
♦CRL	MSC	
	TRW	
1N5122	△UNI	225-131
♦CRL	MSC	
	TRW	
1N5123	△UNI	228-88
♦CRL	MSC	
	TRW	
1N5124	△UNI	229-200
♦CRL	MSC	
	TRW	

TYPE No.	MFRS	Pg&Line
1N5125	△UNI	231-130
♦CRL	MSC	
	TRW	
1N5126	△UNI	238-142
♦CRL	MSC	
	TRW	
1N5127	△UNI	241-71
♦CRL	MSC	
	TRW	
1N5128	△UNI	243-12
♦CRL	MSC	
	TRW	
1N5129	△UNI	244-95
MSC	TRW	
1N5130	△UNI	244-119
MSC	TRW	
1N5131	△UNI	244-148
MSC	TRW	
1N5132	△UNI	244-172
MSC	TRW	
1N5133	△UNI	244-201
MSC	TRW	
1N5134	△UNI	245-24
MSC	TRW	
1N5136,A	♦CODI	527-99
1N5139,A	♦△MOTA	536-26
♦CODI	♦CRY	
♦EAS	♦KEV	
♦KSC	♦MSI	
TRW	♦TSC	
JAN1N5139A	CODI	536-27
CRY	KSC	
1N5140,A	♦△MOTA	539-103
♦CODI	♦CRY	
♦EAS	EMLS	
♦KEV	♦KSC	
♦MSI	TRW	
	♦TSC	
JAN1N5140A	CODI	539-104
CRY	KSC	
1N5141,A	♦△MOTA	543-26
♦CODI	♦CRY	
♦EAS	EMLS	
♦KEV	♦KSC	
♦MSI	TRW	
	♦TSC	
JAN1N5141A	CODI	543-27
CRY	KSC	
1N5142,A	♦△MOTA	544-64
♦CODI	♦CRY	
♦EAS	EMLS	
♦KEV	♦KSC	
♦MSI	TRW	
	♦TSC	
JAN1N5142A	CODI	544-65
CRY	KSC	
1N5143,A	♦△MOTA	547-74
♦CODI	♦CRY	
♦EAS	EMLS	
♦KEV	♦KSC	
♦MSI	TRW	
	♦TSC	
JAN1N5143A	CODI	547-75
CRY	KSC	
1N5144,A	♦△MOTA	549-34
♦CODI	♦CRY	
♦EAS	EMLS	
♦KEV	♦KSC	
♦MSI	TRW	
	♦TSC	
JAN1N5144A	CODI	549-35
CRY	KSC	
1N5145,A	♦△MOTA	552-13
♦CODI	♦CRY	
♦EAS	EMLS	
♦KEV	♦KSC	
♦MSI	TRW	
	♦TSC	
JAN1N5145A	CODI	552-14
CRY	KSC	
1N5146,A	♦△MOTA	553-29
♦CODI	♦CRY	
♦EAS	EMLS	
♦KEV	♦KSC	
♦MSI	TRW	
	♦TSC	
JAN1N5146A	CODI	553-30
CRY	KSC	
1N5147,A	♦△MOTA	555-93
♦CODI	♦CRY	
♦EAS	EMLS	
♦KEV	♦KSC	
♦MSI	TRW	
	♦TSC	
JAN1N5147A	CODI	555-94
CRY	KSC	
1N5148,A	♦△MOTA	558-93
♦CODI	♦CRY	
♦EAS	EMLS	
♦KEV	♦KSC	
♦MSI	TRW	
	♦TSC	
JAN1N5148A	CODI	556-80
CRY	KSC	
1N5149	♦△MOTA	542-77
	♦FERB	
1N5150	♦△MOTA	542-66
	♦FERB	
1N5150A	♦△MOTA	542-78
1N5151	♦△MOTA	535-22
	♦FERB	
1N5152	♦△MOTA	535-23
ESMF	♦FERB	
	MISI	

△-Registered with JEDEC by this manufacturer

♦-Copy of mfr's data sheet may be ordered from D.A.T.A.

1. TYPE No. CROSS INDEX

IN TYPE NUMBER SEQUENCE

TYPE No.	MFRS	Pg&Line
1N5152A	♦△MOTA	535- 20
1N5153	♦△MOTA	535- 24
ESMF	♦FERB	
	MISI	
1N5153A	♦△MOTA	535- 21
1N5154	♦△MOTA	530- 39
	♦FERB	
1N5155	♦△MOTA	530- 40
ESMF	♦FERB	
	MISI	
1N5155A	♦△MOTA	531-105
1N5156	♦△MOTA	524- 46
1N5157	♦△MOTA	524- 47
ESMF	MISI	
1N5162	△INRC	380- 31
INRB	INRI	
INRJ	♦SSI	
	TNC	
1N5163	△HPA	268- 42
1N5164	△HPA	268- 37
1N5165	△HPA	592- 81
JAN1N5165	none	265- 56
1N5166	△HPA	592- 82
1N5167	△HPA	592- 83
1N5168	△HPA	592- 84
1N5169	△HPA	592- 85
1N5170	△SOD	292- 23
IDC	SEN	
	UPI	
1N5171	△SOD	295- 24
IDC	SCO	
SEN	SSI	
	UPI	
1N5172	△SOD	302- 50
IDC	SCO	
SEN	SSI	
	UPI	
1N5173	△SOD	322-105
IDC	SCO	
SEN	SSI	
	UPI	
1N5174	△SOD	332- 41
IDC	SCO	
SEN	SSI	
	UPI	
1N5175	△SOD	341- 67
IDC	SCO	
SEN	SSI	
1N5176	△SOD	349- 61
IDC	SCO	
SEN	SSI	
1N5177	△SOD	362- 13
IDC	SCO	
SEN	SSI	
1N5178	△SOD	372- 37
IDC	SCO	
SEN	SSI	
1N5179	APD	247- 34
EAS	UPI	
1N5180	△UNI	307- 31
TRW	UPI	
1N5181	△SET	396- 85
EDI	EDL	
SCN	SOD	
	SSI	
JAN1N5181	none	396- 89
1N5182	△SET	399- 36
EDI	EDL	
SCN	SOD	
	SSI	
JAN1N5182	none	399- 40
1N5183	△SET	402- 96
EDI	SCN	
SOD	SSI	
JAN1N5183	none	402- 99
1N5184	△SET	405- 75
EDI	SCN	
SOD	SSI	
JAN1N5184	none	405- 79
1N5185	△UNI	273- 76
CRL	SOD	
SSI	TRW	
1N5185A	△CRL	272- 66
	SSI	
1N5186	△UNI	280- 44
CRL	SOD	
SSI	TRW	
JAN1N5186	none	278- 88
1N5186A	△CRL	279- 28
	SSI	
1N5187	△UNI	283- 84
CRL	SOD	
SSI	TRW	
JAN1N5187	none	282- 69
1N5187A	△CRL	282- 95
	SSI	
1N5188	△UNI	286- 18
CRL	SOD	
SSI	TRW	
JAN1N5188	none	285- 67
1N5188A	△CRL	285- 68
	SSI	
1N5189	△UNI	286- 67
CRL	SOD	
SSI	TRW	
1N5189A	△CRL	286- 46
	SSI	
1N5190	△UNI	287- 77
CRL	SOD	
SSI	TRW	
JAN1N5190	none	287- 18
1N5190A	△CRL	287- 10
	SSI	

TYPE No.	MFRS	Pg&Line
1N5194	△TII	252- 97
APD	TSC	
	UPI	
JAN1N5194	none	252- 98
1N5195	△TII	257- 7
	TSC	
JAN1N5195	none	257- 8
1N5196	△TII	258- 15
	TSC	
JAN1N5196	none	258- 16
1N5197	△SET	295- 72
EDI	GIC	
SCN	SEN	
SSI	UPI	
JAN1N5197	SEN	295- 73
SET	UNI	
1N5198	△SET	303- 3
EDI	GIC	
SCN	SEN	
SSI	UPI	
JAN1N5198	SEN	303- 4
SET	UNI	
1N5199	△SET	314- 12
GIC	SCN	
SEN	SSI	
	UPI	
JAN1N5199	SEN	314- 13
SET	UNI	
1N5200	△SET	333- 5
EDI	GIC	
SCN	SEN	
SSI	UPI	
JAN1N5200	SEN	333- 6
SET	UNI	
1N5201	△SET	350- 23
EDI	GIC	
SCN	SEN	
	SSI	
JAN1N5201	SEN	350- 24
SET	UNI	
1N5206	△UNI	338- 37
SOD	TRW	
1N5207	△UNI	338- 38
SOD	TRW	
1N5208	△TII	251- 97
APD	TSC	
	UPI	
1N5209	△TII	255- 70
	APD	
1N5210	△TII	256- 98
1N5211	♦△RCA	311- 79
INRB	INRC	
INRI	INRJ	
SSI	UPI	
1N5212	♦△RCA	330- 61
INRB	INRC	
INRI	INRJ	
SSI	UPI	
1N5213	♦△RCA	347- 89
INRB	INRC	
INRI	INRJ	
	SSI	
1N5214	♦△RCA	360- 2
INRB	INRC	
INRI	INRJ	
	SSI	
1N5215	♦△RCA	310- 25
INRB	INRC	
INRI	INRJ	
SSI	UPI	
1N5216	♦△RCA	328- 94
INRB	INRC	
INRI	INRJ	
SSI	UPI	
1N5217	♦△RCA	346- 37
INRB	INRC	
INRI	INRJ	
	SSI	
1N5218	♦△RCA	359- 29
INRB	INRC	
INRI	INRJ	
	SSI	
1N5219	△ITT	267- 24
	TSC	
1N5220	△ITT	248- 20
INTG	UPI	
1N5221	♦△MOTA	165-177
BNT	CODI	
♦DIC	GSE	
IDC	INRB	
♦INRC	INRI	
INRJ	TNC	
	TSC	
1N5221A,B	♦△MOTA	165-178
BNT	CODI	
♦DIC	GSE	
IDC	INRB	
♦INRC	INRI	
INRJ	TSC	
1N5222	♦△MOTA	165-190
BNT	CODI	
♦DIC	GSE	
IDC	INRB	
♦INRC	INRI	
INRJ	TNC	
	TSC	
1N5222A,B	♦△MOTA	165-191
BNT	CODI	
♦DIC	GSE	
IDC	INRB	
♦INRC	INRI	
INRJ	TSC	
1N5223	♦△MOTA	166- 51
cont next col		

TYPE No.	MFRS	Pg&Line
1N5223		
(cont.)	BNT	
CODI	♦DIC	
GSE	IDC	
INRB	♦INRC	
INRI	INRJ	
TNC	TSC	
1N5223A,B	♦△MOTA	166- 52
BNT	CODI	
♦DIC	GSE	
IDC	INRB	
♦INRC	INRI	
INRJ	TSC	
1N5224	♦△MOTA	166- 71
BNT	CODI	
♦DIC	GSE	
IDC	INRB	
♦INRC	INRI	
INRJ	TNC	
	TSC	
1N5224A,B	♦△MOTA	166- 72
BNT	CODI	
♦DIC	GSE	
IDC	INRB	
♦INRC	INRI	
INRJ	TSC	
1N5225	BNT	166-129
CODI	♦DIC	
GSE	IDC	
INRB	♦INRC	
INRI	INRJ	
♦MOTA	TNC	
	TSC	
1N5225A,B	BNT	166-130
CODI	♦DIC	
GSE	IDC	
INRB	♦INRC	
INRI	INRJ	
♦MOTA	TSC	
1N5226	♦△MOTA	167- 29
BNT	CODI	
♦DIC	GSE	
IDC	INRB	
♦INRC	INRI	
INRJ	TNC	
	TSC	
1N5226A,B	♦△MOTA	167- 30
BNT	CODI	
♦DIC	GSE	
IDC	INRB	
♦INRC	INRI	
INRJ	TSC	
1N5227	BNT	167-177
CODI	♦DIC	
GSE	IDC	
INRB	♦INRC	
INRI	INRJ	
♦MOTA	TNC	
	TSC	
1N5227A,B	♦△MOTA	167-178
BNT	CODI	
♦DIC	GSE	
IDC	INRB	
♦INRC	INRI	
INRJ	TSC	
1N5228	♦△MOTA	168-131
BNT	CODI	
♦DIC	GSE	
IDC	INRB	
♦INRC	INRI	
INRJ	TSC	
1N5228A,B	♦△MOTA	168-132
BNT	CODI	
♦DIC	GSE	
IDC	INRB	
♦INRC	INRI	
INRJ	TSC	
1N5229	♦△MOTA	169-129
BNT	CODI	
♦DIC	GSE	
IDC	INRB	
♦INRC	INRI	
INRJ	TNC	
	TSC	
1N5229A,B	♦△MOTA	169-130
BNT	CODI	
♦DIC	GSE	
IDC	INRB	
♦INRC	INRI	
INRJ	TSC	
1N5230	♦△MOTA	170-130
BNT	CODI	
♦DIC	GSE	
IDC	INRB	
♦INRC	INRI	
INRJ	TNC	
	TSC	
1N5230A,B	♦△MOTA	170-131
BNT	CODI	
♦DIC	GSE	
IDC	INRB	
♦INRC	INRI	
INRJ	TSC	
1N5231	♦△MOTA	171-174
BNT	CODI	
♦DIC	ETC	
GSE	IDC	
INRB	♦INRC	
INRI	INRJ	
TNC	TSC	
1N5231A,B	♦△MOTA	171-175
BNT	CODI	
cont next col.		

TYPE No.	MFRS	Pg&Line
1N5231A,B		
(cont.)	♦DIC	
GSE	IDC	
INRB	♦INRC	
INRI	INRJ	
	TSC	
1N5232	♦△MOTA	173- 38
BNT	CODI	
♦DIC	ETC	
GSE	IDC	
INRB	♦INRC	
INRI	INRJ	
TNC	TSC	
1N5232A,B	♦△MOTA	173- 39
BNT	CODI	
♦DIC	GSE	
IDC	INRB	
♦INRC	INRI	
INRJ	TSC	
1N5233	♦△MOTA	174- 3
BNT	CODI	
♦DIC	ETC	
GSE	IDC	
INRB	♦INRC	
INRI	INRJ	
MSC	TNC	
	TSC	
1N5233A,B	♦△MOTA	174- 4
BNT	CODI	
♦DIC	GSE	
IDC	INRB	
♦INRC	INRI	
INRJ	TSC	
1N5234	♦△MOTA	175- 13
BNT	CODI	
♦DIC	ETC	
GSE	IDC	
INRB	♦INRC	
INRI	INRJ	
MSC	TNC	
	TSC	
1N5234A,B	♦△MOTA	175- 14
BNT	CODI	
♦DIC	GSE	
IDC	INRB	
♦INRC	INRI	
INRJ	TSC	
1N5235	♦△MOTA	177-110
APD	BNT	
CODI	♦DIC	
ETC	GSE	
IDC	INRB	
♦INRC	INRI	
INRJ	MSC	
TNC	TSC	
	UNI	
1N5235A,B	♦△MOTA	177-111
BNT	CODI	
♦DIC	GSE	
IDC	INRB	
♦INRC	INRI	
INRJ	TSC	
	UNI	
1N5236	♦△MOTA	179-158
APD	BNT	
CODI	♦DIC	
ETC	GSE	
IDC	INRB	
♦INRC	INRI	
INRJ	MSC	
TNC	TSC	
	UNI	
1N5236A,B	BNT	179-159
CODI	♦DIC	
GSE	IDC	
INRB	♦INRC	
INRI	INRJ	
♦MOTA	TSC	
	UNI	
1N5237	♦△MOTA	182- 25
APD	BNT	
CODI	♦DIC	
ETC	GSE	
IDC	INRB	
♦INRC	INRI	
INRJ	MSC	
TNC	TSC	
	UNI	
1N5237A,B	♦△MOTA	182- 26
BNT	CODI	
♦DIC	GSE	
IDC	INRB	
♦INRC	INRI	
INRJ	TSC	
	UNI	
1N5238	♦△MOTA	184- 51
APD	BNT	
CODI	♦DIC	
ETC	GSE	
IDC	INRB	
♦INRC	INRI	
INRJ	MSC	
TNC	TSC	
	UNI	
1N5238A,B	♦△MOTA	184- 52
BNT	CODI	
♦DIC	GSE	
IDC	INRB	
♦INRC	INRI	
INRJ	TSC	
	UNI	
1N5239	♦△MOTA	185-136
APD	BNT	
cont next col		

TYPE No.	MFRS	Pg&Line
1N5239		
(cont.)	CODI	
♦DIC	ETC	
GSE	IDC	
INRB	♦INRC	
INRI	INRJ	
MSC	TNC	
TSC	UNI	
1N5239A,B	♦△MOTA	185-137
BNT	CODI	
♦DIC	GSE	
IDC	INRB	
♦INRC	INRI	
INRJ	TSC	
	UNI	
1N5240	♦△MOTA	188- 24
APD	BNT	
CODI	♦DIC	
ETC	GSE	
IDC	INRB	
♦INRC	INRI	
INRJ	MSC	
TNC	TSC	
	UNI	
1N5240A,B	♦△MOTA	188- 25
BNT	CODI	
♦DIC	GSE	
IDC	INRB	
♦INRC	INRI	
INRJ	TSC	
	UNI	
1N5241	♦△MOTA	190- 33
APD	BNT	
CODI	♦DIC	
GSE	IDC	
INRB	♦INRC	
INRI	INRJ	
MSC	TNC	
TSC	UNI	
1N5241A,B	♦△MOTA	190- 34
BNT	CODI	
♦DIC	GSE	
IDC	INRB	
♦INRC	INRI	
INRJ	TSC	
	UNI	
1N5242	♦△MOTA	192- 93
APD	BNT	
CODI	♦DIC	
GSE	IDC	
INRB	♦INRC	
INRI	INRJ	
MSC	TNC	
TSC	UNI	
1N5242A,B	♦△MOTA	192- 94
BNT	CODI	
♦DIC	GSE	
IDC	INRB	
♦INRC	INRI	
INRJ	TSC	
	UNI	
1N5243	APD	194-159
BNT	CODI	
♦DIC	GSE	
IDC	INRB	
♦INRC	INRI	
INRJ	♦MOTA	
MSC	TNC	
TSC	UNI	
1N5243A,B	♦△MOTA	194-160
BNT	CODI	
♦DIC	GSE	
IDC	INRB	
♦INRC	INRI	
INRJ	TSC	
	UNI	
1N5244	♦△MOTA	196- 63
APD	BNT	
CODI	♦DIC	
GSE	IDC	
INRB	♦INRC	
INRI	INRJ	
MSC	TNC	
TSC	UNI	
1N5244A,B	♦△MOTA	196- 64
BNT	CODI	
♦DIC	GSE	
IDC	INRB	
♦INRC	INRI	
INRJ	TSC	
	UNI	
1N5245	♦△MOTA	197-113
APD	BNT	
CODI	♦DIC	
GSE	IDC	
INRB	♦INRC	
INRI	INRJ	
MSC	TNC	
TSC	UNI	
1N5245A,B	♦△MOTA	197-114
BNT	CODI	
♦DIC	GSE	
IDC	INRB	
♦INRC	INRI	
INRJ	TSC	
	UNI	
1N5246	♦△MOTA	199-110
APD	BNT	
CODI	♦DIC	
GSE	IDC	
INRB	♦INRC	
INRI	INRJ	
MSC	TNC	
TSC	UNI	

△-Registered with JEDEC by this manufacturer

♦-Copy of mfr's data sheet may be ordered from D.A.T.A.

1. TYPE No. CROSS INDEX

IN TYPE NUMBER SEQUENCE

TYPE No.	MFRS	Pg&Line
1N5246A,B	♦△MOTA	199-111
BNT	CODI	
♦DIC	GSE	
IDC	INRB	
♦INRC	INRI	
INRJ	TSC	
	UNI	
1N5247	♦△MOTA	201- 16
APD	BNT	
CODI	♦DIC	
GSE	IDC	
INRB	♦INRC	
INRI	INRJ	
MSC	TNC	
TSC	UNI	
1N5247A,B	♦△MOTA	201- 17
BNT	CODI	
♦DIC	GSE	
IDC	INRB	
♦INRC	INRI	
INRJ	TSC	
	UNI	
1N5248	♦△MOTA	202- 20
APD	BNT	
CODI	♦DIC	
GSE	IDC	
INRB	♦INRC	
INRI	INRJ	
MSC	TNC	
TSC	UNI	
1N5248A,B	♦△MOTA	202- 21
BNT	CODI	
♦DIC	GSE	
IDC	INRB	
♦INRC	INRI	
INRJ	TSC	
	UNI	
1N5249	♦△MOTA	203-153
APD	BNT	
CODI	♦DIC	
GSE	IDC	
INRB	♦INRC	
INRI	INRJ	
MSC	TNC	
TSC	UNI	
1N5249A,B	♦△MOTA	203-154
BNT	CODI	
♦DIC	GSE	
IDC	INRB	
♦INRC	INRI	
INRJ	TSC	
	UNI	
1N5250	♦△MOTA	204-163
APD	BNT	
CODI	♦DIC	
GSE	IDC	
INRB	♦INRC	
INRI	INRJ	
MSC	TNC	
TSC	UNI	
1N5250A,B	♦△MOTA	204-164
BNT	CODI	
♦DIC	GSE	
IDC	INRB	
♦INRC	INRI	
INRJ	TSC	
	UNI	
1N5251	♦△MOTA	206-134
APD	BNT	
CODI	♦DIC	
GSE	IDC	
INRB	♦INRC	
INRI	INRJ	
MSC	TNC	
TSC	UNI	
1N5251A,B	♦△MOTA	206-135
BNT	CODI	
♦DIC	GSE	
IDC	INRB	
♦INRC	INRI	
INRJ	TSC	
	UNI	
1N5252	♦△MOTA	208-127
APD	BNT	
CODI	♦DIC	
GSE	IDC	
INRB	♦INRC	
INRI	INRJ	
MSC	TNC	
TSC	UNI	
1N5252A,B	♦△MOTA	208-128
BNT	CODI	
♦DIC	GSE	
IDC	INRB	
♦INRC	INRI	
INRJ	TSC	
	UNI	
1N5253	♦△MOTA	210- 25
APD	BNT	
CODI	♦DIC	
GSE	IDC	
INRB	♦INRC	
INRI	INRJ	
MSC	TNC	
TSC	UNI	
1N5253A,B	♦△MOTA	210- 26
BNT	CODI	
♦DIC	GSE	
IDC	INRB	
♦INRC	INRI	
INRJ	TSC	
	UNI	
1N5254	♦△MOTA	211- 17
cont next col		

TYPE No.	MFRS	Pg&Line
1N5254		
(cont)	APD	
BNT	CODI	
♦DIC	GSE	
IDC	INRB	
♦INRC	INRI	
INRJ	MSC	
TNC	TSC	
	UNI	
1N5254A,B	♦△MOTA	211- 18
BNT	CODI	
♦DIC	GSE	
IDC	INRB	
♦INRC	INRI	
INRJ	TSC	
	UNI	
1N5255	♦△MOTA	212-112
APD	BNT	
CODI	♦DIC	
GSE	IDC	
INRB	♦INRC	
INRI	INRJ	
MSC	TNC	
TSC	UNI	
1N5255A,B	BNT	212-113
CODI	♦DIC	
GSE	IDC	
INRB	♦INRC	
INRI	INRJ	
♦MOTA	TSC	
	UNI	
1N5256	♦△MOTA	213- 30
APD	BNT	
CODI	♦DIC	
GSE	IDC	
INRB	♦INRC	
INRI	INRJ	
MSC	TNC	
TSC	UNI	
1N5256A,B	♦△MOTA	213- 31
BNT	CODI	
♦DIC	GSE	
IDC	INRB	
♦INRC	INRI	
INRJ	TSC	
	UNI	
1N5257	APD	214-174
BNT	♦DIC	
GSE	IDC	
INRB	♦INRC	
INRI	INRJ	
♦MOTA	MSC	
TNC	TSC	
	UNI	
1N5257A,B	♦△MOTA	214-175
BNT	♦DIC	
GSE	IDC	
INRB	♦INRC	
INRI	INRJ	
TSC	UNI	
1N5258	♦△MOTA	216-115
BNT	♦DIC	
GSE	IDC	
MSC	TNC	
TSC	UNI	
1N5258A,B	♦△MOTA	216-116
BNT	♦DIC	
GSE	IDC	
TSC	UNI	
1N5259	♦△MOTA	218- 10
BNT	♦DIC	
GSE	IDC	
MSC	TNC	
TSC	UNI	
1N5259A,B	BNT	218- 11
♦DIC	GSE	
IDC	♦MOTA	
TSC	UNI	
1N5260	♦△MOTA	219- 93
BNT	♦DIC	
GSE	IDC	
MSC	TNC	
TSC	UNI	
1N5260A,B	♦△MOTA	219- 94
BNT	♦DIC	
GSE	IDC	
TSC	UNI	
1N5261	♦△MOTA	221- 25
BNT	♦DIC	
GSE	IDC	
MSC	TNC	
TSC	UNI	
1N5261A,B	♦△MOTA	221- 26
BNT	♦DIC	
GSE	IDC	
TSC	UNI	
1N5262	♦△MOTA	222-167
BNT	♦DIC	
GSE	IDC	
MSC	TNC	
TSC	UNI	
1N5262A,B	♦△MOTA	222-168
BNT	♦DIC	
GSE	IDC	
TSC	UNI	
1N5263	♦△MOTA	224- 60
BNT	♦DIC	
GSE	IDC	
MSC	SCN	
TNC	TSC	
	UNI	
1N5263A,B	♦△MOTA	224- 61
BNT	♦DIC	
cont next col		

TYPE No.	MFRS	Pg&Line
1N5263A,B		
(cont)	GSE	
IDC	TSC	
	UNI	
1N5264	♦△MOTA	225-114
BNT	♦DIC	
GSE	IDC	
MSC	TNC	
TSC	UNI	
1N5264A,B	♦△MOTA	225-115
BNT	♦DIC	
GSE	IDC	
TSC	UNI	
1N5265	♦△MOTA	226- 16
BNT	♦DIC	
GSE	IDC	
MSC	TNC	
TSC	UNI	
1N5265A,B	♦△MOTA	226- 17
BNT	♦DIC	
GSE	IDC	
TSC	UNI	
1N5266	♦△MOTA	227- 69
BNT	♦DIC	
GSE	IDC	
MSC	TNC	
TSC	UNI	
1N5266A,B	♦△MOTA	227- 70
BNT	♦DIC	
GSE	IDC	
TSC	UNI	
1N5267	♦△MOTA	228-168
BNT	♦DIC	
GSE	IDC	
MSC	TNC	
TSC	UNI	
1N5267A,B	♦△MOTA	228-169
BNT	♦DIC	
GSE	IDC	
TSC	UNI	
1N5268	♦△MOTA	230- 64
BNT	♦DIC	
GSE	IDC	
MSC	TNC	
TSC	UNI	
1N5268A,B	♦△MOTA	230- 65
BNT	♦DIC	
GSE	IDC	
TSC	UNI	
1N5269	♦△MOTA	231- 90
BNT	♦DIC	
GSE	IDC	
MSC	TNC	
TSC	UNI	
1N5269A,B	BNT	231- 91
♦DIC	GSE	
IDC	♦MOTA	
TSC	UNI	
1N5270	♦△MOTA	232- 10
BNT	♦DIC	
GSE	IDC	
MSC	TNC	
TSC	UNI	
1N5270A,B	BNT	232- 11
♦DIC	GSE	
IDC	♦MOTA	
TSC	UNI	
1N5271	♦△MOTA	233- 43
BNT	♦DIC	
GSE	IDC	
MSC	TNC	
TSC	UNI	
1N5271A,B	♦△MOTA	233- 44
BNT	♦DIC	
GSE	IDC	
TSC	UNI	
1N5272	♦△MOTA	235- 18
BNT	♦DIC	
GSE	IDC	
MSC	TNC	
TSC	UNI	
1N5272A,B	♦△MOTA	235- 19
BNT	♦DIC	
GSE	IDC	
TSC	UNI	
1N5273	♦△MOTA	236- 39
BNT	♦DIC	
GSE	IDC	
MSC	TNC	
TSC	UNI	
1N5273A,B	BNT	236- 40
♦DIC	GSE	
IDC	♦MOTA	
TSC	UNI	
1N5274	♦△MOTA	237- 81
BNT	♦DIC	
GSE	IDC	
MSC	TNC	
TSC	UNI	
1N5274A,B	♦△MOTA	237- 82
BNT	♦DIC	
GSE	IDC	
TSC	UNI	
1N5275	♦△MOTA	238- 93
BNT	♦DIC	
GSE	IDC	
MSC	TNC	
TSC	UNI	
1N5275A,B	♦△MOTA	238- 94
BNT	♦DIC	
GSE	IDC	
TSC	UNI	
1N5276	♦△MOTA	239- 53
cont next col		

TYPE No.	MFRS	Pg&Line
1N5276		
(cont)	BNT	
♦DIC	GSE	
IDC	MSC	
TNC	TSC	
	UNI	
1N5276A,B	♦△MOTA	239- 54
BNT	♦DIC	
GSE	IDC	
TSC	UNI	
1N5277	♦△MOTA	240- 86
BNT	♦DIC	
GSE	IDC	
MSC	TNC	
TSC	UNI	
1N5277A,B	♦△MOTA	240- 87
BNT	♦DIC	
GSE	IDC	
TSC	UNI	
1N5278	♦△MOTA	241- 54
BNT	♦DIC	
GSE	IDC	
MSC	TNC	
TSC	UNI	
1N5278A,B	BNT	241- 55
♦DIC	GSE	
IDC	♦MOTA	
TSC	UNI	
1N5279	♦△MOTA	242- 21
BNT	♦DIC	
GSE	IDC	
MSC	TNC	
TSC	UNI	
1N5279A,B	♦△MOTA	242- 22
BNT	♦DIC	
GSE	IDC	
TSC	UNI	
1N5280	♦△MOTA	242-177
BNT	♦DIC	
GSE	IDC	
MSC	TNC	
TSC	UNI	
1N5280A,B	♦△MOTA	242-178
BNT	♦DIC	
GSE	IDC	
TSC	UNI	
1N5281	♦△MOTA	243- 64
BNT	♦DIC	
GSE	IDC	
MSC	TNC	
TSC	UNI	
1N5281A,B	♦△MOTA	243- 65
BNT	♦DIC	
GSE	IDC	
TSC	UNI	
1N5282	♦△FSC	276- 28
APD	BNT	
IDC	TSC	
JAN1N5282	none	276- 33
1N5283	♦△MOTA	593- 51
	BNT	
1N5284	♦△MOTA	593- 52
	BNT	
1N5285	♦△MOTA	593- 53
	BNT	
1N5286	♦△MOTA	593- 54
	BNT	
1N5287	♦△MOTA	593- 55
	BNT	
1N5288	♦△MOTA	593- 56
	BNT	
1N5289	♦△MOTA	593- 57
	BNT	
1N5290	♦△MOTA	593- 58
	BNT	
1N5291	♦△MOTA	593- 59
	BNT	
1N5292	♦△MOTA	593- 60
	BNT	
1N5293	♦△MOTA	593- 61
	BNT	
1N5294	♦△MOTA	593- 62
	BNT	
1N5295	♦△MOTA	593- 63
	BNT	
1N5296	♦△MOTA	593- 64
	BNT	
1N5297	♦△MOTA	593- 65
	BNT	
1N5298	♦△MOTA	593- 66
	BNT	
1N5299	♦△MOTA	593- 67
	BNT	
1N5300	♦△MOTA	593- 68
	BNT	
1N5301	♦△MOTA	593- 69
	BNT	
1N5302	♦△MOTA	593- 70
	BNT	
1N5303	♦△MOTA	593- 71
	BNT	
1N5304	♦△MOTA	593- 72
BNT	EDI	
1N5305	♦△MOTA	593- 73
	BNT	
1N5306	♦△MOTA	593- 74
	BNT	
1N5307	♦△MOTA	593- 75
	BNT	
1N5308	♦△MOTA	593- 76
	BNT	
1N5309	♦△MOTA	593- 77
	BNT	

TYPE No.	MFRS	Pg&Line
1N5310	♦△MOTA	593- 78
	BNT	
1N5311	♦△MOTA	593- 79
	BNT	
1N5312	♦△MOTA	593- 80
	BNT	
1N5313	♦△MOTA	593- 81
	BNT	
1N5314	♦△MOTA	593- 82
	BNT	
1N5315	△TSC	277- 54
BNT	MSC	
1N5316	△TSC	277- 55
BNT	MSC	
1N5317	♦△FSC	276- 29
BNT	MSC	
	TSC	
JAN1N5317	none	276- 34
1N5318	♦△FSC	275- 37
BNT	MSC	
	TSC	
1N5319	♦△FSC	269- 11
BNT	MSC	
	TSC	
1N5320	△UNI	280- 45
	SSI	
1N5321	SOD	592- 86
1N5322	SOD	592- 87
1N5323	SOD	592- 88
1N5324	EDI	408- 8
1N5326	△TRW	315- 54
	UPI	
1N5329	UNI	400-107
1N5330	UNI	384- 64
1N5331	♦△GESY	379- 56
EDI	SSI	
1N5332	♦△GESY	379- 81
	SSI	
1N5333	♦△MOTA	167- 81
GSE	INRB	
♦INRC	INRI	
	INRJ	
1N5333A	△MOTA	167- 82
GSE	INRB	
INRC	INRI	
	INRJ	
1N5333B	△MOTA	167- 83
GSE	INRB	
INRC	INRI	
	INRJ	
1N5334	♦△MOTA	168- 43
GSE	INRB	
♦INRC	INRI	
	INRJ	
1N5334A	△MOTA	168- 44
GSE	INRB	
INRC	INRI	
	INRJ	
1N5334B	△MOTA	168- 45
GSE	INRB	
INRC	INRI	
	INRJ	
1N5335	♦△MOTA	169- 7
GSE	INRB	
♦INRC	INRI	
	INRJ	
1N5335A	△MOTA	169- 8
GSE	INRB	
INRC	INRI	
	INRJ	
1N5335B	△MOTA	169- 9
GSE	INRB	
INRC	INRI	
	INRJ	
1N5336	♦△MOTA	170- 4
GSE	INRB	
♦INRC	INRI	
	INRJ	
1N5336A	△MOTA	170- 5
GSE	INRB	
INRC	INRI	
	INRJ	
1N5336B	△MOTA	170- 6
GSE	INRB	
INRC	INRI	
	INRJ	
1N5337	♦△MOTA	171- 14
GSE	INRB	
♦INRC	INRI	
	INRJ	
1N5337A	△MOTA	171- 15
GSE	INRB	
INRC	INRI	
	INRJ	
1N5337B	△MOTA	171- 16
GSE	INRB	
INRC	INRI	
	INRJ	
1N5338	♦△MOTA	172- 48
GSE	INRB	
♦INRC	INRI	
	INRJ	
1N5338A	△MOTA	172- 49
GSE	INRB	
INRC	INRI	
	INRJ	
1N5338B	△MOTA	172- 50
GSE	INRB	
INRC	INRI	
	INRJ	
1N5339	♦△MOTA	173-129
GSE	INRB	
♦INRC	INRI	
	INRJ	

△-Registered with JEDEC by this manufacturer

♦-Copy of mfr's data sheet may be ordered from D.A.T.A.

1. TYPE No. CROSS INDEX

IN TYPE NUMBER SEQUENCE

TYPE No	MFRS	Pg&Line
1N5339A	△MOTA	173-130
GSE	INRB	
INRC	INRI	
	INRJ	
1N5339B	△MOTA	173-131
GSE	INRB	
INRC	INRI	
	INRJ	
1N5340	♦△MOTA	174- 16
GSE	INRB	
♦INRC	INRI	
	INRJ	
1N5340A	△MOTA	174- 17
GSE	INRB	
INRC	INRI	
	INRJ	
1N5340B	△MOTA	174- 18
GSE	INRB	
INRC	INRI	
	INRJ	
1N5341	♦△MOTA	175-106
GSE	INRB	
♦INRC	INRI	
	INRJ	
1N5341A	△MOTA	175-107
GSE	INRB	
INRC	INRI	
	INRJ	
1N5341B	△MOTA	175-108
GSE	INRB	
INRC	INRI	
	INRJ	
1N5342	♦△MOTA	178- 93
CRL	GSE	
INRB	♦INRC	
INRI	INRJ	
SCN	UNI	
1N5342A	△MOTA	178- 94
CRL	GSE	
INRB	INRC	
INRI	INRJ	
	UNI	
1N5342B	△MOTA	178- 95
CRL	GSE	
INRB	INRC	
INRI	INRJ	
	UNI	
1N5343	♦△MOTA	180-136
CRL	GSE	
IDC	INRB	
♦INRC	INRI	
INRJ	SCN	
	UNI	
1N5343A	△MOTA	180-137
CRL	GSE	
IDC	INRB	
INRC	INRI	
INRJ	UNI	
1N5343B	△MOTA	180-138
CRL	GSE	
IDC	INRB	
INRC	INRI	
INRJ	UNI	
1N5344	♦△MOTA	183- 4
CRL	GSE	
INRB	♦INRC	
INRI	INRJ	
SCN	UNI	
1N5344A	△MOTA	183- 5
CRL	GSE	
INRB	INRC	
INRI	INRJ	
	UNI	
1N5344B	△MOTA	183- 6
CRL	GSE	
INRB	INRC	
INRI	INRJ	
	UNI	
1N5345	♦△MOTA	184- 55
CRL	GSE	
IDC	INRB	
♦INRC	INRI	
INRJ	SCN	
	UNI	
1N5345A	△MOTA	184- 56
CRL	GSE	
IDC	INRB	
INRC	INRI	
INRJ	UNI	
1N5345B	△MOTA	184- 57
CRL	GSE	
INRB	INRC	
INRI	INRJ	
	UNI	
1N5346	♦△MOTA	186-120
CRL	GSE	
IDC	INRB	
♦INRC	INRI	
INRJ	SCN	
	UNI	
1N5346A	△MOTA	186-121
CRL	GSE	
IDC	INRB	
INRC	INRI	
INRJ	UNI	
1N5346B	△MOTA	186-122
CRL	GSE	
IDC	INRB	
INRC	INRI	
INRJ	UNI	
1N5347	♦△MOTA	189- 18
CRL	GSE	
IDC	INRB	
cont next col		

TYPE No.	MFRS	Pg&Line
1N5347		
(cont)	♦INRC	
INRI	INRJ	
SCN	UNI	
1N5347A	△MOTA	189- 19
CRL	GSE	
IDC	INRB	
INRC	INRI	
INRJ	UNI	
1N5347B	△MOTA	189- 20
CRL	GSE	
IDC	INRB	
INRC	INRI	
INRJ	UNI	
1N5348	♦△MOTA	191- 8
CRL	GSE	
IDC	INRB	
♦INRC	INRI	
INRJ	SCN	
	UNI	
1N5348A	△MOTA	191- 9
CRL	GSE	
IDC	INRB	
INRC	INRI	
INRJ	UNI	
1N5348B	△MOTA	191- 10
CRL	GSE	
IDC	INRB	
INRC	INRI	
INRJ	UNI	
1N5349	♦△MOTA	193-108
CRL	GSE	
IDC	INRB	
♦INRC	INRI	
INRJ	SCN	
	UNI	
1N5349A	△MOTA	193-109
CRL	GSE	
IDC	INRB	
INRC	INRI	
INRJ	UNI	
1N5349B	△MOTA	193-110
CRL	GSE	
IDC	INRB	
INRC	INRI	
INRJ	UNI	
1N5350	♦△MOTA	195-132
CRL	GSE	
IDC	INRB	
♦INRC	INRI	
INRJ	SCN	
	UNI	
1N5350A	△MOTA	195-133
CRL	GSE	
IDC	INRB	
INRC	INRI	
INRJ	UNI	
1N5350B	△MOTA	195-134
CRL	GSE	
IDC	INRB	
INRC	INRI	
INRJ	UNI	
1N5351	♦△MOTA	196-124
CRL	GSE	
IDC	INRB	
♦INRC	INRI	
INRJ	SCN	
	UNI	
1N5351A	△MOTA	196-125
CRL	GSE	
IDC	INRB	
INRC	INRI	
INRJ	UNI	
1N5351B	△MOTA	196-126
CRL	GSE	
IDC	INRB	
INRC	INRI	
INRJ	UNI	
1N5352	♦△MOTA	198-108
CRL	GSE	
IDC	INRB	
♦INRC	INRI	
INRJ	SCN	
	UNI	
1N5352A	△MOTA	198-109
CRL	GSE	
IDC	INRB	
INRC	INRI	
INRJ	UNI	
1N5352B	△MOTA	198-110
CRL	GSE	
IDC	INRB	
INRC	INRI	
INRJ	UNI	
1N5353	♦△MOTA	200- 78
CRL	GSE	
IDC	INRB	
♦INRC	INRI	
INRJ	SCN	
	UNI	
1N5353A	△MOTA	200- 79
CRL	GSE	
IDC	INRB	
INRC	INRI	
INRJ	UNI	
1N5353B	△MOTA	200- 80
CRL	GSE	
IDC	INRB	
INRC	INRI	
INRJ	UNI	
1N5354	♦△MOTA	201- 54
CRL	GSE	
IDC	INRB	
cont.next col.		

TYPE No.	MFRS	Pg&Line
1N5354		
(cont)	♦INRC	
INRI	INRJ	
SCN	UNI	
1N5354A	△MOTA	201- 55
CRL	GSE	
IDC	INRB	
INRC	INRI	
INRJ	UNI	
1N5354B	△MOTA	201- 56
CRL	GSE	
IDC	INRB	
INRC	INRI	
INRJ	UNI	
1N5355	♦△MOTA	202-200
CRL	GSE	
IDC	INRB	
♦INRC	INRI	
INRJ	SCN	
	UNI	
1N5355A	△MOTA	203- 1
CRL	GSE	
IDC	INRB	
INRC	INRI	
INRJ	UNI	
1N5355B	△MOTA	203- 2
CRL	GSE	
IDC	INRB	
INRC	INRI	
INRJ	UNI	
1N5356	♦△MOTA	204- 13
CRL	GSE	
IDC	INRB	
♦INRC	INRI	
INRJ	SCN	
	UNI	
1N5356A	△MOTA	204- 14
CRL	GSE	
IDC	INRB	
INRC	INRI	
INRJ	UNI	
1N5356B	△MOTA	204- 15
CRL	GSE	
IDC	INRB	
INRC	INRI	
INRJ	UNI	
1N5357	♦△MOTA	205-137
CRL	GSE	
IDC	INRB	
♦INRC	INRI	
INRJ	SCN	
	UNI	
1N5357A	△MOTA	205-138
CRL	GSE	
IDC	INRB	
INRC	INRI	
INRJ	UNI	
1N5357B	△MOTA	205-139
CRL	GSE	
IDC	INRB	
INRI	INRJ	
	UNI	
1N5358	♦△MOTA	207-123
CRL	GSE	
IDC	INRB	
♦INRC	INRI	
INRJ	SCN	
	UNI	
1N5358A	△MOTA	207-124
CRL	GSE	
IDC	INRB	
INRC	INRI	
INRJ	UNI	
1N5358B	△MOTA	207-125
CRL	GSE	
IDC	INRB	
INRC	INRI	
INRJ	UNI	
1N5359	♦△MOTA	209- 99
CRL	GSE	
IDC	INRB	
♦INRC	INRI	
INRJ	SCN	
	UNI	
1N5359A	△MOTA	209-100
CRL	GSE	
IDC	INRB	
INRC	INRI	
INRJ	UNI	
1N5359B	△MOTA	209-101
CRL	GSE	
IDC	INRB	
INRC	INRI	
INRJ	UNI	
1N5360	♦△MOTA	210- 59
CRL	GSE	
IDC	INRB	
♦INRC	INRI	
INRJ	SCN	
	UNI	
1N5360A	△MOTA	210- 60
CRL	GSE	
IDC	INRB	
INRC	INRI	
INRJ	UNI	
1N5360B	△MOTA	210- 61
CRL	GSE	
IDC	INRB	
INRC	INRI	
INRJ	UNI	
1N5361	♦△MOTA	211-190
CRL	GSE	
IDC	INRB	
cont next col		

TYPE No.	MFRS	Pg&Line
1N5361		
(cont)	♦INRC	
INRI	INRJ	
SCN	UNI	
1N5361A	△MOTA	211-191
CRL	GSE	
IDC	INRB	
INRC	INRI	
INRJ	UNI	
1N5361B	△MOTA	211-192
CRL	GSE	
IDC	INRB	
INRC	INRI	
INRJ	UNI	
1N5362	♦△MOTA	212-123
CRL	GSE	
INRB	♦INRC	
INRI	INRJ	
SCN	UNI	
1N5362A	△MOTA	212-124
CRL	GSE	
INRB	INRC	
INRI	INRJ	
	UNI	
1N5362B	△MOTA	212-125
CRL	GSE	
INRB	INRC	
INRI	INRJ	
	UNI	
1N5363	♦△MOTA	213-183
CRL	GSE	
IDC	INRB	
♦INRC	INRI	
INRJ	UNI	
1N5363A	△MOTA	213-184
CRL	GSE	
IDC	INRB	
INRC	INRI	
INRJ	UNI	
1N5363B	△MOTA	213-185
CRL	GSE	
IDC	INRB	
INRC	INRI	
INRJ	UNI	
1N5364	♦△MOTA	215-154
CRL	GSE	
IDC	INRB	
♦INRC	INRI	
INRJ	SCN	
	UNI	
1N5364A	△MOTA	215-155
CRL	GSE	
IDC	INRB	
INRC	INRI	
INRJ	UNI	
1N5364B	△MOTA	215-156
CRL	GSE	
IDC	INRB	
INRC	INRI	
INRJ	UNI	
1N5365	♦△MOTA	217- 48
CRL	GSE	
IDC	INRB	
♦INRC	INRI	
INRJ	SCN	
	UNI	
1N5365A	△MOTA	217- 49
CRL	GSE	
IDC	INRB	
INRC	INRI	
INRJ	UNI	
1N5365B	△MOTA	217- 50
CRL	GSE	
IDC	INRB	
INRC	INRI	
INRJ	UNI	
1N5366	♦△MOTA	218-125
CRL	GSE	
IDC	INRB	
♦INRC	INRI	
INRJ	SCN	
	UNI	
1N5366A	△MOTA	218-126
CRL	GSE	
IDC	INRB	
INRC	INRI	
INRJ	UNI	
1N5366B	△MOTA	218-127
CRL	GSE	
IDC	INRB	
INRC	INRI	
INRJ	UNI	
1N5367	♦△MOTA	220- 17
CRL	GSE	
IDC	INRB	
♦INRC	INRI	
INRJ	SCN	
	UNI	
1N5367A	△MOTA	220- 18
CRL	GSE	
IDC	INRB	
INRC	INRI	
INRJ	UNI	
1N5367B	△MOTA	220- 19
CRL	GSE	
IDC	INRB	
INRC	INRI	
INRJ	UNI	
1N5368	♦△MOTA	221-147
CRL	GSE	
IDC	INRB	
♦INRC	INRI	
INRJ	SCN	
	UNI	

TYPE No.	MFRS	Pg&Line
1N5368A	△MOTA	221-148
CRL	GSE	
IDC	INRB	
INRC	INRI	
INRJ	UNI	
1N5368B	△MOTA	221-149
CRL	GSE	
IDC	INRB	
INRC	INRI	
INRJ	UNI	
1N5369	♦△MOTA	223- 88
CRL	GSE	
IDC	INRB	
♦INRC	INRI	
INRJ	SCN	
	UNI	
1N5369A	△MOTA	223- 89
CRL	GSE	
IDC	INRB	
INRC	INRI	
INRJ	UNI	
1N5369B	△MOTA	223- 90
CRL	GSE	
IDC	INRB	
INRC	INRI	
INRJ	UNI	
1N5370	♦△MOTA	224-179
CRL	GSE	
IDC	INRB	
♦INRC	INRI	
INRJ	SCN	
	UNI	
1N5370A	△MOTA	224-180
CRL	GSE	
IDC	INRB	
INRC	INRI	
INRJ	UNI	
1N5370B	△MOTA	224-181
CRL	GSE	
IDC	INRB	
INRC	INRI	
INRJ	UNI	
1N5371	♦△MOTA	225-132
CRL	GSE	
IDC	INRB	
♦INRC	INRI	
INRJ	SCN	
	UNI	
1N5371A	△MOTA	225-133
CRL	GSE	
IDC	INRB	
INRC	INRI	
INRJ	UNI	
1N5371B	△MOTA	225-134
CRL	GSE	
IDC	INRB	
INRC	INRI	
INRJ	UNI	
1N5372	♦△MOTA	226-120
CRL	GSE	
IDC	INRB	
♦INRC	INRI	
INRJ	SCN	
	UNI	
1N5372A	△MOTA	226-121
CRL	GSE	
IDC	INRB	
INRC	INRI	
INRJ	UNI	
1N5372B	△MOTA	226-122
CRL	GSE	
IDC	INRB	
INRC	INRI	
INRJ	UNI	
1N5373	♦△MOTA	227-182
CRL	GSE	
IDC	INRB	
♦INRC	INRI	
INRJ	SCN	
	UNI	
1N5373A	△MOTA	228- 1
CRL	GSE	
IDC	INRB	
INRC	INRI	
INRJ	UNI	
1N5373B	△MOTA	228- 2
CRL	GSE	
IDC	INRB	
INRC	INRI	
INRJ	UNI	
1N5374	♦△MOTA	229- 96
CRL	GSE	
IDC	INRB	
♦INRC	INRI	
INRJ	SCN	
	UNI	
1N5374A	△MOTA	229- 97
CRL	GSE	
IDC	INRB	
INRC	INRI	
INRJ	UNI	
1N5374B	△MOTA	229- 98
CRL	GSE	
IDC	INRB	
INRC	INRI	
INRJ	UNI	
1N5375	♦△MOTA	230-172
CRL	GSE	
IDC	INRB	
♦INRC	INRI	
INRJ	SCN	
	UNI	
1N5375A	△MOTA	230-173
cont.next page		

△-Registered with JEDEC by this manufacturer

♦-Copy of mfr's data sheet may be ordered from D.A.T.A.

1. TYPE No. CROSS INDEX

IN TYPE NUMBER SEQUENCE

TYPE No.	MFRS	Pg&Line
1N5375A		
(cont)	CRL	
GSE	IDC	
INRB	INRC	
INRI	INRJ	
	UNI	
1N5375B	△MOTA	230-174
CRL	GSE	
IDC	INRB	
INRC	INRI	
INRJ	UNI	
1N5376	♦△MOTA	231- 98
CRL	GSE	
IDC	INRB	
♦INRC	INRI	
INRJ	SCN	
	UNI	
1N5376A	△MOTA	231- 99
CRL	GSE	
IDC	INRB	
INRC	INRI	
INRJ	UNI	
1N5376B	△MOTA	231-100
CRL	GSE	
IDC	INRB	
INRC	INRI	
INRJ	UNI	
1N5377	♦△MOTA	232-104
CRL	GSE	
IDC	INRB	
♦INRC	INRI	
INRJ	SCN	
	UNI	
1N5377A	△MOTA	232-105
CRL	GSE	
IDC	INRB	
INRC	INRI	
INRJ	UNI	
1N5377B	△MOTA	232-106
CRL	GSE	
IDC	INRB	
INRC	INRI	
INRJ	UNI	
1N5378	♦△MOTA	233-158
CRL	GSE	
IDC	INRB	
♦INRC	INRI	
INRJ	SCN	
	UNI	
1N5378A	△MOTA	233-159
CRL	GSE	
IDC	INRB	
INRC	INRI	
INRJ	UNI	
1N5378B	△MOTA	233-160
CRL	GSE	
IDC	INRB	
INRC	INRI	
INRJ	UNI	
1N5379	♦△MOTA	235-111
CRL	GSE	
IDC	SCN	
	UNI	
1N5379A	△MOTA	235-112
CRL	GSE	
IDC	UNI	
1N5379B	△MOTA	235-113
CRL	GSE	
IDC	UNI	
1N5380	♦△MOTA	236-143
CRL	GSE	
IDC	SCN	
	UNI	
1N5380A	△MOTA	236-144
CRL	GSE	
IDC	UNI	
1N5380B	△MOTA	236-145
CRL	GSE	
IDC	UNI	
1N5381	CRL	238- 3
GSE	IDC	
♦MOTA	SCN	
	UNI	
1N5381A	△MOTA	238- 4
CRL	GSE	
IDC	UNI	
1N5381B	△MOTA	238- 5
CRL	GSE	
IDC	UNI	
1N5382	♦△MOTA	238-143
CRL	GSE	
SCN	UNI	
1N5382A	△MOTA	238-144
CRL	GSE	
	UNI	
1N5382B	△MOTA	238-145
CRL	GSE	
IDC	UNI	
1N5383	♦△MOTA	239-156
CRL	GSE	
SCN	UNI	
1N5383A	△MOTA	239-157
CRL	GSE	
	UNI	
1N5383B	△MOTA	239-158
CRL	GSE	
	UNI	
1N5384	♦△MOTA	241- 1
CRL	GSE	
SCN	UNI	
1N5384A	△MOTA	241- 2
CRL	GSE	
	UNI	
1N5384B	△MOTA	241- 3
CRL	GSE	
	UNI	
1N5385	♦△MOTA	241- 72
CRL	GSE	
SCN	UNI	
1N5385A	△MOTA	241- 73
CRL	GSE	
	UNI	
1N5385B	△MOTA	241- 74
CRL	GSE	
	UNI	
1N5386	♦△MOTA	242-117
CRL	GSE	
SCN	UNI	
1N5386A	△MOTA	242-118
CRL	GSE	
	UNI	
1N5386B	△MOTA	242-119
CRL	GSE	
	UNI	
1N5387	♦△MOTA	243- 13
CRL	GSE	
SCN	UNI	
1N5387A	△MOTA	243- 14
CRL	GSE	
	UNI	
1N5387B	△MOTA	243- 15
CRL	GSE	
	UNI	
1N5388	♦△MOTA	243-154
CRL	GSE	
SCN	UNI	
1N5388A	△MOTA	243-155
CRL	GSE	
	UNI	
1N5388B	△MOTA	243-156
CRL	GSE	
	UNI	
1N5389	EDI	291- 79
1N5390	△FSC	262-106
	QUA	
1N5391	△WESY	294-103
BNT	EDI	
EDL	PWC	
QUA	SCN	
SCO	SEN	
	SSI	
1N5392	△WESY	302- 5
BNT	EDI	
EDL	PWC	
SCN	SCO	
SEN	SSI	
1N5393	△WESY	313- 7
BNT	EDI	
EDL	PWC	
SCN	SCO	
SEN	SSI	
1N5394	△WESY	322- 68
BNT	EDI	
EDL	PWC	
SCN	SCO	
SEN	SSI	
1N5395	△WESY	331-103
BNT	EDI	
EDL	PWC	
SCN	SCO	
SEN	SSI	
1N5396	△WESY	341- 38
BNT	EDI	
EDL	PWC	
SCN	SCO	
SEN	SSI	
1N5397	△WESY	349- 18
BNT	EDI	
EDL	PWC	
SCN	SCO	
SEN	SSI	
1N5398	△WESY	361- 90
BNT	EDI	
EDL	PWC	
SCN	SCO	
SEN	SSI	
1N5399	△WESY	372- 6
BNT	EDI	
EDL	PWC	
QUA	SCN	
SCO	SEN	
	SSI	
1N5400	△WESY	295- 82
BNT	EDI	
ETC	♦GIC	
PWC	SCO	
SEN	♦SES	
SSI	UPI	
1N5401	△WESY	303- 16
BNT	EDI	
ETC	♦GIC	
PWC	SCN	
SCO	SEN	
♦SES	SSI	
	UPI	
1N5402	△WESY	314- 25
BNT	EDI	
ETC	♦GIC	
PWC	SCN	
SCO	SEN	
♦SES	SSI	
	UPI	
1N5403	△WESY	323- 54
BNT	EDI	
ETC	♦GIC	
PWC	SCN	
cont next col		
1N5403		
(cont)	SCO	
SEN	♦SES	
SSI	UPI	
1N5404	△WESY	333- 18
BNT	ETC	
♦GIC	PWC	
SCN	SCO	
SEN	♦SES	
SSI	UPI	
1N5405	△WESY	342- 11
BNT	EDI	
ETC	♦GIC	
PWC	SCN	
SCO	SEN	
♦SES	SSI	
1N5406	△WESY	350- 36
BNT	EDI	
ETC	♦GIC	
PWC	SCN	
SCO	SEN	
♦SES	SSI	
1N5407	△WESY	362- 92
BNT	EDI	
ETC	♦GIC	
PWC	SCN	
SCO	SEN	
♦SES	SSI	
1N5408	△WESY	372- 99
BNT	EDI	
ETC	♦GIC	
PWC	SCN	
SCO	SEN	
♦SES	SSI	
1N5409	△TRW	325- 33
	SSI	
1N5410	△TRW	324- 49
	UPI	
1N5411	♦△RCA	598- 18
1N5412	TSC	268- 97
1N5413	TSC	276- 21
1N5414	TSC	276-107
1N5415	♦△SET	272- 31
	SSI	
JAN1N5415	SET	272- 32
1N5416	♦△SET	278- 89
	SSI	
JAN1N5416	SET	278- 90
1N5417	♦△SET	282- 45
	SSI	
JAN1N5417	SET	282- 46
1N5418	♦△SET	285- 18
	SSI	
JAN1N5418	SET	285- 19
1N5419	♦△SET	286- 47
	SSI	
JAN1N5419	SET	286- 48
1N5420	△SET	287- 19
	SSI	
JAN1N5420	none	287- 20
1N5421	△MIC	562- 78
	CODI	
1N5422	△MIC	562-106
	CODI	
1N5423	△MIC	563- 35
	CODI	
1N5424	△MIC	563- 36
	CODI	
1N5425	△MIC	563- 62
	CODI	
1N5426	△MIC	247- 69
APD	UPI	
1N5427	♦△FSC	592- 54
1N5428	♦△FSC	592- 55
1N5429	♦△FSC	592- 56
1N5430	♦△FSC	592- 57
1N5431	♦△FSC	592- 58
1N5432	♦△FSC	592- 59
1N5433	△UNI	287- 78
SSI	TRW	
1N5434	△UNI	287- 79
SSI	TRW	
1N5435	△UNI	358- 77
SSI	TRW	
1N5436	△MIC	510- 2
1N5437	△MIC	510- 3
1N5438	△MIC	510- 4
1N5441	△MOTA	536- 28
CODI	CRY	
KEV	KSC	
1N5441A	△MOTA	536- 29
CODI	CRY	
♦KEV	♦KSC	
	♦MSI	
1N5441B	△MOTA	536- 30
CODI	CRY	
♦KEV	KSC	
	♦MSI	
1N5441C	△MOTA	536- 31
CODI	CRY	
♦KEV	KSC	
	♦MSI	
1N5441D	△MOTA	536- 32
CODI	CRY	
	♦KEV	
1N5442	△MOTA	539- 2
CODI	CRY	
KEV	KSC	
1N5442A	△MOTA	539- 3
CODI	CRY	
♦KEV	♦KSC	
	♦MSI	
1N5442B	△MOTA	539- 4
cont next col		
1N5442B		
(cont)	CODI	
CRY	♦KEV	
KSC	♦MSI	
1N5442C	△MOTA	539- 5
CODI	CRY	
♦KEV	KSC	
	♦MSI	
1N5442D	△MOTA	539- 6
CODI	CRY	
	♦KEV	
1N5443	△MOTA	539-105
CODI	CRY	
KEV	KSC	
1N5443A	△MOTA	539-106
CODI	CRY	
♦KEV	♦KSC	
	♦MSI	
1N5443B	△MOTA	539-107
CODI	CRY	
♦KEV	KSC	
	♦MSI	
1N5443C	△MOTA	539-108
CODI	CRY	
♦KEV	KSC	
	♦MSI	
1N5443D	△MOTA	539-109
CODI	CRY	
	♦KEV	
1N5444	△MOTA	543- 28
CODI	CRY	
KEV	KSC	
1N5444A	△MOTA	543- 29
CODI	CRY	
♦KEV	♦KSC	
	♦MSI	
1N5444B	△MOTA	543- 30
CODI	CRY	
♦KEV	KSC	
	♦MSI	
1N5444C	△MOTA	543- 31
CODI	CRY	
♦KEV	KSC	
	♦MSI	
1N5444D	△MOTA	543- 32
CODI	CRY	
	♦KEV	
1N5445	△MOTA	544- 66
CODI	CRY	
KEV	KSC	
1N5445A	△MOTA	544- 67
CODI	CRY	
♦KEV	♦KSC	
	♦MSI	
1N5445B	△MOTA	544- 68
CODI	CRY	
♦KEV	KSC	
	♦MSI	
1N5445C	△MOTA	544- 69
CODI	CRY	
♦KEV	KSC	
	♦MSI	
1N5445D	△MOTA	544- 70
CODI	CRY	
	♦KEV	
1N5446	△MOTA	547- 76
CODI	CRY	
KEV	KSC	
1N5446A	△MOTA	547- 77
CODI	CRY	
♦KEV	♦KSC	
	♦MSI	
1N5446B	△MOTA	547- 78
CODI	CRY	
♦KEV	KSC	
	♦MSI	
1N5446C	△MOTA	547- 79
CODI	CRY	
♦KEV	KSC	
	♦MSI	
1N5446D	△MOTA	547- 80
CODI	CRY	
	♦KEV	
1N5447	△MOTA	548- 37
CODI	CRY	
KEV	KSC	
1N5447A	△MOTA	548- 38
CODI	CRY	
♦KEV	♦KSC	
	♦MSI	
1N5447B	△MOTA	548- 39
CODI	CRY	
♦KEV	KSC	
	♦MSI	
1N5447C	△MOTA	548- 40
CODI	CRY	
♦KEV	KSC	
	♦MSI	
1N5447D	△MOTA	548- 41
CODI	CRY	
	♦KEV	
1N5448	△MOTA	549- 36
CODI	CRY	
KEV	KSC	
1N5448A	△MOTA	549- 37
CODI	CRY	
♦KEV	♦KSC	
	♦MSI	
1N5448B	△MOTA	549- 38
CODI	CRY	
♦KEV	KSC	
	♦MSI	
1N5448C	△MOTA	549- 39
cont next col.		
1N5448C		
(cont.)	CODI	
CRY	♦KEV	
KSC	♦MSI	
1N5448D	△MOTA	549- 40
CODI	CRY	
	♦KEV	
1N5449	△MOTA	552- 15
CODI	CRY	
KEV	KSC	
1N5449A	△MOTA	552- 16
CODI	CRY	
♦KEV	♦KSC	
	♦MSI	
1N5449B	△MOTA	552- 17
CODI	CRY	
♦KEV	KSC	
	♦MSI	
1N5449C	△MOTA	552- 18
CODI	CRY	
♦KEV	KSC	
	♦MSI	
1N5449D	△MOTA	552- 19
CODI	CRY	
	♦KEV	
1N5450	△MOTA	553- 31
CODI	CRY	
KEV	KSC	
1N5450A	△MOTA	553- 32
CODI	CRY	
♦KEV	♦KSC	
	♦MSI	
1N5450B	△MOTA	553- 33
CODI	CRY	
♦KEV	KSC	
	♦MSI	
1N5450C	△MOTA	553- 34
CODI	CRY	
♦KEV	KSC	
	♦MSI	
1N5450D	△MOTA	553- 35
CODI	CRY	
	♦KEV	
1N5451	△MOTA	555- 95
CODI	CRY	
KEV	KSC	
1N5451A	△MOTA	555- 96
CODI	CRY	
♦KEV	♦KSC	
	♦MSI	
1N5451B	△MOTA	555- 97
CODI	CRY	
♦KEV	KSC	
	♦MSI	
1N5451C	△MOTA	555- 98
CODI	CRY	
♦KEV	KSC	
	♦MSI	
1N5451D	△MOTA	555- 99
CODI	CRY	
	♦KEV	
1N5452	△MOTA	556- 81
CODI	CRY	
KEV	KSC	
1N5452A	△MOTA	556- 82
CODI	CRY	
♦KEV	♦KSC	
	♦MSI	
1N5452B	△MOTA	556- 83
CODI	CRY	
♦KEV	KSC	
	♦MSI	
1N5452C	△MOTA	556- 84
CODI	CRY	
♦KEV	KSC	
	♦MSI	
1N5452D	△MOTA	556- 85
CODI	CRY	
	♦KEV	
1N5453	△MOTA	559- 14
CODI	CRY	
KEV	KSC	
1N5453A	△MOTA	559- 15
CODI	CRY	
♦KEV	♦KSC	
	♦MSI	
1N5453B	△MOTA	559- 16
CODI	CRY	
♦KEV	KSC	
	♦MSI	
1N5453C	△MOTA	559- 17
CODI	CRY	
♦KEV	KSC	
	♦MSI	
1N5453D	△MOTA	559- 18
CODI	CRY	
	♦KEV	
1N5454	△MOTA	560- 7
CODI	CRY	
KEV	KSC	
1N5454A	△MOTA	560- 8
CODI	CRY	
♦KEV	♦KSC	
	♦MSI	
1N5454B	△MOTA	560- 9
CODI	CRY	
♦KEV	KSC	
	♦MSI	
1N5454C	△MOTA	560- 10
CODI	CRY	
♦KEV	KSC	
	♦MSI	
1N5454D	△MOTA	560- 11
cont.next page		

△-Registered with JEDEC by this manufacturer

♦-Copy of mfr's data sheet may be ordered from D.A.T.A.

1. TYPE No. CROSS INDEX

IN TYPE NUMBER SEQUENCE

TYPE No.	MFRS	Pg&Line
1N5454D (cont.)	CODI	
	CRY	
	♦KEV	
1N5455	△MOTA	561- 19
	CODI	
	CRY	
	KEV	
	KSC	
1N5455A	△MOTA	561- 20
	CODI	
	CRY	
	♦KEV	
	♦KSC	
	♦MSI	
1N5455B	△MOTA	561- 21
	CODI	
	CRY	
	♦KEV	
	KSC	
	♦MSI	
1N5455C	△MOTA	561- 22
	CODI	
	CRY	
	♦KEV	
	KSC	
	♦MSI	
1N5455D	△MOTA	561- 23
	CODI	
	CRY	
	♦KEV	
1N5456	△MOTA	561- 93
	CODI	
	CRY	
	KEV	
	KSC	
1N5456A	△MOTA	561- 94
	CODI	
	CRY	
	♦KEV	
	♦KSC	
	♦MSI	
1N5456B	△MOTA	561- 95
	CODI	
	CRY	
	♦KEV	
	KSC	
	♦MSI	
1N5456C	△MOTA	561- 96
	CODI	
	CRY	
	♦KEV	
	KSC	
	♦MSI	
1N5456D	△MOTA	561- 97
	CODI	
	CRY	
	♦KEV	
1N5461	△MOTA	536- 33
	CODI	
	CRY	
	KEV	
	KSC	
1N5461A	△MOTA	536- 34
	CODI	
	CRY	
	♦KEV	
	♦KSC	
	♦MSI	
1N5461B	△MOTA	536- 35
	CODI	
	CRY	
	♦KEV	
	KSC	
	♦MSI	
JAN1N5461B	none	536- 36
1N5461C	△MOTA	536- 37
	CODI	
	CRY	
	♦KEV	
	KSC	
	♦MSI	
1N5461D	△MOTA	536- 38
	CODI	
	CRY	
	♦KEV	
1N5462	△MOTA	539- 7
	CODI	
	CRY	
	KEV	
	KSC	
1N5462A	△MOTA	539- 8
	CODI	
	CRY	
	♦KEV	
	♦KSC	
	♦MSI	
1N5462B	△MOTA	539- 9
	CODI	
	CRY	
	♦KEV	
	KSC	
	♦MSI	
JAN1N5462B	none	539- 10
1N5462C	△MOTA	539- 11
	CODI	
	CRY	
	♦KEV	
	KSC	
	♦MSI	
1N5462D	△MOTA	539- 12
	CODI	
	CRY	
	♦KEV	
1N5463	△MOTA	539-110
	CODI	
	CRY	
	KEV	
	KSC	
1N5463A	△MOTA	540- 1
	CODI	
	CRY	
	♦KEV	
	♦KSC	
	♦MSI	
1N5463B	△MOTA	540- 2
	CODI	
	CRY	
	♦KEV	
	KSC	
	♦MSI	
JAN1N5463B	none	540- 3
1N5463C	△MOTA	540- 4
	CODI	
	CRY	
	♦KEV	
	KSC	
	♦MSI	
1N5463D	△MOTA	540- 5
	CODI	
	CRY	
	♦KEV	
1N5464	△MOTA	543- 33
	CODI	
	CRY	
	KEV	
	KSC	
1N5464A	△MOTA	543- 34
	CODI	
	CRY	
	♦KEV	
	♦KSC	
	♦MSI	
1N5464B	△MOTA	543- 35
	CODI	
	CRY	
	♦KEV	
	KSC	
	♦MSI	
JAN1N5464B	none	543- 36
1N5464C	△MOTA	543- 37
	CODI	
	CRY	
	♦KEV	
	KSC	
	♦MSI	
1N5464D	△MOTA	543- 38
cont next col		

TYPE No.	MFRS	Pg&Line
1N5464D (cont.)	CODI	
	CRY	
	♦KEV	
1N5465	△MOTA	544- 71
	CODI	
	CRY	
	KEV	
	KSC	
1N5465A	△MOTA	544- 72
	CODI	
	CRY	
	♦KEV	
	♦KSC	
	♦MSI	
1N5465B	△MOTA	544- 73
	CODI	
	CRY	
	♦KEV	
	KSC	
	♦MSI	
JAN1N5465B	none	544- 74
1N5465C	△MOTA	544- 75
	CODI	
	CRY	
	♦KEV	
	KSC	
	♦MSI	
1N5465D	△MOTA	544- 76
	CODI	
	CRY	
	♦KEV	
1N5466	△MOTA	547- 81
	CODI	
	CRY	
	KEV	
	KSC	
1N5466A	△MOTA	547- 82
	CODI	
	CRY	
	♦KEV	
	♦KSC	
	♦MSI	
1N5466B	△MOTA	547- 83
	CODI	
	CRY	
	♦KEV	
	KSC	
	♦MSI	
JAN1N5466B	none	547- 84
1N5466C	△MOTA	547- 85
	CODI	
	CRY	
	♦KEV	
	KSC	
	♦MSI	
1N5466D	△MOTA	547- 86
	CODI	
	CRY	
	♦KEV	
1N5467	△MOTA	548- 42
	CODI	
	CRY	
	KEV	
	KSC	
1N5467A	△MOTA	548- 43
	CODI	
	CRY	
	♦KEV	
	♦KSC	
	♦MSI	
1N5467B	△MOTA	548- 44
	CODI	
	CRY	
	♦KEV	
	KSC	
	♦MSI	
JAN1N5467B	none	548- 45
1N5467C	△MOTA	548- 46
	CODI	
	CRY	
	♦KEV	
	KSC	
	♦MSI	
1N5467D	△MOTA	548- 47
	CODI	
	CRY	
	♦KEV	
1N5468	△MOTA	549- 41
	CODI	
	CRY	
	KEV	
	KSC	
1N5468A	△MOTA	549- 42
	CODI	
	CRY	
	♦KEV	
	♦KSC	
	♦MSI	
1N5468B	△MOTA	549- 43
	CODI	
	CRY	
	♦KEV	
	KSC	
	♦MSI	
JAN1N5468B	none	549- 44
1N5468C	△MOTA	549- 45
	CODI	
	CRY	
	♦KEV	
	KSC	
	♦MSI	
1N5468D	△MOTA	549- 46
	CODI	
	CRY	
	♦KEV	
1N5469	△MOTA	552- 20
	CODI	
	CRY	
	KEV	
	KSC	
1N5469A	△MOTA	552- 21
	CODI	
	CRY	
	♦KEV	
	♦KSC	
	♦MSI	
1N5469B	△MOTA	552- 22
	CODI	
	CRY	
	♦KEV	
	KSC	
	♦MSI	
JAN1N5469B	none	552- 23
1N5469C	△MOTA	552- 24
	CODI	
	CRY	
	♦KEV	
	KSC	
	♦MSI	
1N5469D	△MOTA	552- 25
	CODI	
	CRY	
	♦KEV	
1N5470	△MOTA	553- 36
	CODI	
	CRY	
	KEV	
	KSC	
1N5470A	△MOTA	553- 37
	CODI	
	CRY	
	♦KEV	
	♦KSC	
	♦MSI	
1N5470B	△MOTA	553- 38
	CODI	
	CRY	
	♦KEV	
	KSC	
	♦MSI	
JAN1N5470B	none	553- 39
1N5470C	△MOTA	553- 40
	CODI	
	CRY	
	♦KEV	
	KSC	
	MSI	

TYPE No.	MFRS	Pg&Line
1N5470D	△MOTA	553- 41
	CODI	
	CRY	
	♦KEV	
1N5471	△MOTA	555-100
	CODI	
	CRY	
	KEV	
	KSC	
1N5471A	△MOTA	555-101
	CODI	
	CRY	
	♦KEV	
	♦KSC	
	♦MSI	
1N5471B	△MOTA	555-102
	CODI	
	CRY	
	♦KEV	
	KSC	
	♦MSI	
JAN1N5471B	none	555-103
1N5471C	△MOTA	555-104
	CODI	
	CRY	
	♦KEV	
	KSC	
	♦MSI	
1N5471D	△MOTA	555-105
	CODI	
	CRY	
	♦KEV	
1N5472	△MOTA	556- 86
	CODI	
	CRY	
	KEV	
	KSC	
1N5472A	△MOTA	556- 87
	CODI	
	CRY	
	♦KEV	
	♦KSC	
	♦MSI	
1N5472B	△MOTA	556- 88
	CODI	
	CRY	
	♦KEV	
	KSC	
	♦MSI	
JAN1N5472B	none	556- 89
1N5472C	△MOTA	556- 90
	CODI	
	CRY	
	♦KEV	
	KSC	
	♦MSI	
1N5472D	△MOTA	556- 91
	CODI	
	CRY	
	♦KEV	
1N5473	△MOTA	559- 19
	CODI	
	CRY	
	KEV	
	KSC	
1N5473A	△MOTA	559- 20
	CODI	
	CRY	
	♦KEV	
	♦KSC	
	♦MSI	
1N5473B	△MOTA	559- 21
	CODI	
	CRY	
	♦KEV	
	KSC	
	♦MSI	
JAN1N5473B	none	559- 22
1N5473C	△MOTA	559- 23
	CODI	
	CRY	
	♦KEV	
	KSC	
	♦MSI	
1N5473D	△MOTA	559- 24
	CODI	
	CRY	
	♦KEV	
1N5474	△MOTA	560- 12
	CODI	
	CRY	
	KEV	
	KSC	
1N5474A	△MOTA	560- 13
	CODI	
	CRY	
	♦KEV	
	♦KSC	
	♦MSI	
1N5474B	△MOTA	560- 14
	CODI	
	CRY	
	♦KEV	
	KSC	
	♦MSI	
JAN1N5474B	none	560- 15
1N5474C	△MOTA	560- 16
	CODI	
	CRY	
	♦KEV	
	KSC	
	♦MSI	
1N5474D	△MOTA	560- 17
	CODI	
	CRY	
	♦KEV	
1N5475	△MOTA	561- 24
	CODI	
	CRY	
	KEV	
	KSC	
1N5475A	△MOTA	561- 25
	CODI	
	CRY	
	♦KEV	
	♦KSC	
	♦MSI	
1N5475B	△MOTA	561- 26
	CODI	
	CRY	
	♦KEV	
	KSC	
	♦MSI	
JAN1N5475B	none	561- 27
1N5475C	△MOTA	561- 28
	CODI	
	CRY	
	♦KEV	
	KSC	
	♦MSI	
1N5475D	△MOTA	561- 29
	CODI	
	CRY	
	♦KEV	
1N5476	△MOTA	561- 98
	CODI	
	CRY	
	KEV	
	KSC	
1N5476A	△MOTA	561- 99
	CODI	
	CRY	
	♦KEV	
	♦KSC	
	♦MSI	
1N5476B	△MOTA	561-100
	CODI	
	CRY	
	♦KEV	
	KSC	
	♦MSI	
JAN1N5476B	none	561-101
1N5476C	△MOTA	561-102
	CODI	
	CRY	
	♦KEV	
	KSC	
	♦MSI	

TYPE No.	MFRS	Pg&Line
1N5476D	△MOTA	561-103
	CODI	
	CRY	
	♦KEV	
1N5477	△UNI	261- 62
	SSI	
JAN1N5477	none	290- 18
1N5478	△UNI	261- 64
	SSI	
JAN1N5478	none	290- 40
1N5479	△UNI	261- 66
	SSI	
JAN1N5479	none	290- 66
1N5480	△UNI	261- 67
	SSI	
JAN1N5480	none	290- 76
1N5481	△UNI	261- 70
	SSI	
JAN1N5481	none	291- 7
1N5482	△UNI	261- 31
	SSI	
JAN1N5482	none	289- 14
1N5483	△UNI	261- 49
	SSI	
JAN1N5483	none	289- 49
1N5484	△UNI	261- 58
	SSI	
JAN1N5484	none	289- 72
1N5485	△UNI	261- 63
	SSI	
JAN1N5485	none	290- 19
1N5518	△MOTA	166-179
	CODI	
	TSC	
1N5518A	♦△MOTA	166-180
	CODI	
	IDC	
	TSC	
1N5518B	♦△MOTA	166-181
	CODI	
	IDC	
	TSC	
JAN1N5518B	none	166-182
1N5518C	△MOTA	166-183
	CODI	
	IDC	
	TSC	
1N5518D	△MOTA	166-184
	CODI	
	IDC	
	TSC	
1N5519	△MOTA	167-135
	CODI	
	IDC	
	TSC	
1N5519A	♦△MOTA	167-136
	CODI	
	IDC	
	TSC	
1N5519B	♦△MOTA	167-137
	CODI	
	IDC	
	TSC	
JAN1N5519B	none	167-138
1N5519C	△MOTA	167-139
	CODI	
	IDC	
	TSC	
1N5519D	△MOTA	167-140
	CODI	
	IDC	
	TSC	
1N5520	△MOTA	168- 89
	CODI	
	IDC	
	TSC	
1N5520A	♦△MOTA	168- 90
	CODI	
	IDC	
	TSC	
1N5520B	♦△MOTA	168- 91
	CODI	
	IDC	
	TSC	
JAN1N5520B	none	168- 92
1N5520C	△MOTA	168- 93
	CODI	
	IDC	
	TSC	
1N5520D	△MOTA	168- 94
	CODI	
	IDC	
	TSC	
1N5521	△MOTA	169- 89
	CODI	
	IDC	
	TSC	
1N5521A	♦△MOTA	169- 90
	CODI	
	IDC	
	TSC	
1N5521B	♦△MOTA	169- 91
	CODI	
	IDC	
	TSC	
JAN1N5521B	none	169- 92
1N5521C	△MOTA	169- 93
	CODI	
	IDC	
	TSC	
1N5521D	△MOTA	169- 94
	CODI	
	IDC	
	TSC	
1N5522	△MOTA	170- 83
	CODI	
	IDC	
	TSC	
1N5522A	♦△MOTA	170- 84
	CODI	
	IDC	
	TSC	
1N5522B	♦△MOTA	170- 85
	CODI	
	IDC	
	TSC	
JAN1N5522B	none	170- 86
1N5522C	△MOTA	170- 87
	CODI	
	IDC	
	TSC	
1N5522D	△MOTA	170- 88
	CODI	
	IDC	
	TSC	
1N5523	△MOTA	171-128
	CODI	
	IDC	
	TSC	
1N5523A	♦△MOTA	171-129
cont.next col.		

TYPE No.	MFRS	Pg&Line
1N5523A (cont.)	CODI	
	IDC	
	TSC	
1N5523B	♦△MOTA	171-130
	CODI	
	IDC	
	TSC	
JAN1N5523B	none	171-131
1N5523C	△MOTA	171-132
	CODI	
	IDC	
	TSC	
1N5523D	△MOTA	171-133
	CODI	
	IDC	
	TSC	
1N5524	△MOTA	172-168
	CODI	
	IDC	
	TSC	
1N5524A	♦△MOTA	172-169
	CODI	
	IDC	
	TSC	
1N5524B	♦△MOTA	172-170
	CODI	
	IDC	
	TSC	
JAN1N5524B	none	172-171
1N5524C	△MOTA	172-172
	CODI	
	IDC	
	TSC	
1N5524D	△MOTA	172-173
	CODI	
	IDC	
	TSC	
1N5525	△MOTA	174-151
	CODI	
	IDC	
	KSC	
	TSC	
1N5525A	♦△MOTA	174-152
	CODI	
	IDC	
	KSC	
	TSC	
1N5525B	♦△MOTA	174-153
	CODI	
	IDC	
	KSC	
	TSC	
JAN1N5525B	none	174-154
1N5525C	△MOTA	174-155
	CODI	
	IDC	
	KSC	
	TSC	
1N5525D	△MOTA	174-156
	CODI	
	IDC	
	KSC	
	TSC	
1N5526	△MOTA	177- 27
	CODI	
	IDC	
	KSC	
	TSC	
1N5526A	♦△MOTA	177- 28
	CODI	
	IDC	
	KSC	
	TSC	
1N5526B	♦△MOTA	177- 29
	CODI	
	IDC	
	KSC	
	TSC	
JAN1N5526B	none	177- 30
1N5526C	△MOTA	177- 31
	CODI	
	IDC	
	KSC	
	TSC	
1N5526D	△MOTA	177- 32
	CODI	
	IDC	
	KSC	
	TSC	
1N5527	△MOTA	179- 80
	CODI	
	IDC	
	KSC	
	TSC	
1N5527A	♦△MOTA	179- 81
	CODI	
	IDC	
	KSC	
	TSC	
1N5527B	♦△MOTA	179- 82
	CODI	
	IDC	
	KSC	
	TSC	
JAN1N5527B	none	179- 83
1N5527C	△MOTA	179- 84
	CODI	
	IDC	
	KSC	
	TSC	
1N5527D	△MOTA	179- 85
	CODI	
	IDC	
	KSC	
	TSC	
1N5528	△MOTA	181-136
	CODI	
	IDC	
	KSC	
	TSC	
1N5528A	♦△MOTA	181-137
	CODI	
	IDC	
	KSC	
	TSC	
1N5528B	♦△MOTA	181-138
	CODI	
	IDC	
	KSC	
	TSC	
JAN1N5528B	none	181-139
1N5528C	△MOTA	181-140
	CODI	
	IDC	
	KSC	
	TSC	
1N5528D	△MOTA	181-141
	CODI	
	IDC	
	KSC	
	TSC	
1N5529	△MOTA	185- 60
	CODI	
	IDC	
	TSC	
1N5529A	♦△MOTA	185- 61
	CODI	
	IDC	
	TSC	
1N5529B	♦△MOTA	185- 62
	CODI	
	IDC	
	TSC	
JAN1N5529B	none	185- 63
1N5529C	△MOTA	185- 64
	CODI	
	IDC	
	TSC	
1N5529D	△MOTA	185- 65
	CODI	
	IDC	
	TSC	
1N5530	△MOTA	187-127
	CODI	
	IDC	
	TSC	
1N5530A	♦△MOTA	187-128
cont next page		

△-Registered with JEDEC by this manufacturer

♦-Copy of mfr's data sheet may be ordered from D.A.T.A.

1. TYPE No. CROSS INDEX

IN TYPE NUMBER SEQUENCE

TYPE No.	MFRS	Pg&Line
1N5530A (cont)	CODI IDC TSC	
1N5530B	♦△MOTA CODI IDC TSC	187-129
JAN1N5530B	none	187-130
1N5530C	△MOTA CODI IDC TSC	187-131
1N5530D	△MOTA CODI IDC TSC	187-132
1N5531	△MOTA CODI IDC TSC	189-163
1N5531A	♦△MOTA CODI IDC TSC	189-164
1N5531B	♦△MOTA CODI IDC TSC	189-165
JAN1N5531B	none	189-166
1N5531C	△MOTA CODI IDC TSC	189-167
1N5531D	△MOTA CODI IDC TSC	189-168
1N5532	△MOTA CODI IDC TSC	192- 7
1N5532A	♦△MOTA CODI IDC TSC	192- 8
1N5532B	♦△MOTA CODI IDC TSC	192- 9
JAN1N5532B	none	192- 10
1N5532C	△MOTA CODI IDC TSC	192- 11
1N5532D	△MOTA CODI IDC TSC	192- 12
1N5533	△MOTA CODI IDC TSC	194- 92
1N5533A	♦△MOTA CODI IDC TSC	194- 93
1N5533B	♦△MOTA CODI IDC TSC	194- 94
JAN1N5533B	none	194- 95
1N5533C	△MOTA CODI IDC TSC	194- 96
1N5533D	△MOTA CODI IDC TSC	194- 97
1N5534	△MOTA CODI IDC TSC	196- 28
1N5534A	♦△MOTA CODI IDC TSC	196- 29
1N5534B	♦△MOTA CODI IDC TSC	196- 30
JAN1N5534B	none	196- 31
1N5534C	△MOTA CODI IDC TSC	196- 32
1N5534D	△MOTA CODI IDC TSC	196- 33
1N5535	△MOTA CODI IDC TSC	197- 39
1N5535A	♦△MOTA CODI IDC TSC	197- 40
1N5535B	♦△MOTA CODI IDC TSC	197- 41
JAN1N5535B	none	197- 42
1N5535C	△MOTA CODI IDC TSC	197- 43
1N5535D	△MOTA CODI IDC TSC	197- 44
1N5536	△MOTA CODI IDC TSC	199- 44
1N5536A	♦△MOTA CODI IDC TSC	199- 45
1N5536B	♦△MOTA CODI IDC TSC	199- 46
JAN1N5536B	none	199- 47
1N5536C	△MOTA CODI IDC TSC	199- 48
1N5536D	△MOTA CODI IDC TSC	199- 49
1N5537	△MOTA CODI IDC TSC	200-173
1N5537A	♦△MOTA	200-174

cont next col

TYPE No.	MFRS	Pg&Line
1N5537A (cont)	CODI IDC TSC	
1N5537B	♦△MOTA CODI IDC TSC	200-175
JAN1N5537B	none	200-176
1N5537C	△MOTA CODI IDC TSC	200-177
1N5537D	△MOTA CODI IDC TSC	200-178
1N5538	△MOTA CODI IDC TSC	201-124
1N5538A	♦△MOTA CODI IDC TSC	201-125
1N5538B	♦△MOTA CODI IDC TSC	201-126
JAN1N5538B	none	201-127
1N5538C	△MOTA CODI IDC TSC	201-128
1N5538D	△MOTA CODI IDC TSC	201-129
1N5539	△MOTA CODI IDC TSC	203-117
1N5539A	♦△MOTA CODI IDC TSC	203-118
1N5539B	♦△MOTA CODI IDC TSC	203-119
JAN1N5539B	none	203-120
1N5539C	△MOTA CODI IDC TSC	203-121
1N5539D	△MOTA CODI IDC TSC	203-122
1N5540	△MOTA CODI IDC TSC	204- 97
1N5540A	♦△MOTA CODI IDC TSC	204- 98
1N5540B	♦△MOTA CODI IDC TSC	204- 99
JAN1N5540B	none	204-100
1N5540C	△MOTA CODI IDC TSC	204-101
1N5540D	△MOTA CODI IDC TSC	204-102
1N5541	△MOTA CODI IDC TSC	206- 66
1N5541A	♦△MOTA CODI IDC TSC	206- 67
1N5541B	♦△MOTA CODI IDC TSC	206- 68
JAN1N5541B	none	206- 69
1N5541C	△MOTA CODI IDC TSC	206- 70
1N5541D	△MOTA CODI IDC TSC	206- 71
1N5542	△MOTA CODI IDC TSC	208- 64
1N5542A	♦△MOTA CODI IDC TSC	208- 65
1N5542B	♦△MOTA CODI IDC TSC	208- 66
JAN1N5542B	none	208- 67
1N5542C	△MOTA CODI IDC TSC	208- 68
1N5542D	△MOTA CODI IDC TSC	208- 69
1N5543	△MOTA CODI IDC TSC	209-188
1N5543A	♦△MOTA CODI IDC TSC	209-189
1N5543B	♦△MOTA CODI IDC TSC	209-190
JAN1N5543B	none	209-191
1N5543C	△MOTA CODI IDC TSC	209-192
1N5543D	△MOTA CODI IDC TSC	209-193
1N5544	△MOTA CODI IDC TSC	212- 92
1N5544A	♦△MOTA CODI IDC TSC	212- 93
1N5544B	♦△MOTA CODI IDC TSC	212- 94

TYPE No.	MFRS	Pg&Line
JAN1N5544B	none	212- 95
1N5544C	△MOTA CODI IDC TSC	212- 96
1N5544D	△MOTA CODI IDC TSC	212- 97
1N5545	△MOTA CODI IDC TSC	212-166
1N5545A	♦△MOTA CODI IDC TSC	212-167
1N5545B	♦△MOTA CODI IDC TSC	212-168
JAN1N5545B	none	212-169
1N5545C	△MOTA CODI IDC TSC	212-170
1N5545D	△MOTA CODI IDC TSC	212-171
1N5546	△MOTA CODI IDC TSC	212- 98
1N5546A	♦△MOTA CODI IDC TSC	212- 99
1N5546B	♦△MOTA CODI IDC TSC	214-117
JAN1N5546B	none	214-118
1N5546C	△MOTA CODI IDC TSC	214-119
1N5546D	△MOTA CODI IDC TSC	214-120
1N5550	♦△SET GIC SSI UNI	283- 45
JAN1N5550	SET	283- 54
1N5551	♦△SET GIC SSI UNI	285- 96
JAN1N5551	SET	285-106
1N5552	♦△SET GIC SSI UNI	287- 46
JAN1N5552	SET	287- 56
1N5553	♦△SET GIC SSI UNI	287-103
JAN1N5553	SET	288- 1
1N5554	♦△SET GIC SSI	288- 50
JAN1N5554	SET	288- 59
1N5555	♦△GSE KSC SCN ♦UNI	594- 49
JAN1N5555	none	248- 50
1N5556	♦△GSE KSC SCN ♦UNI	594- 50
JAN1N5556	none	249- 36
1N5557	♦△GSE KSC ♦UNI	594- 51
JAN1N5557	none	249- 76
1N5558	♦△GSE KSC SCN ♦UNI	594- 52
JAN1N5558	none	256- 80
1N5559	♦△CRL APD IDC TSC	177-162
1N5559A	♦△CRL IDC SCN TSC	177-163
1N5559B	♦△CRL IDC SCN TSC	177-164
1N5560	♦△CRL APD IDC TSC	180- 30
1N5560A	♦△CRL IDC SCN TSC	180- 31
1N5560B	♦△CRL IDC SCN TSC	180- 32
1N5561	♦△CRL APD IDC TSC	182- 78
1N5561A	♦△CRL IDC SCN TSC	182- 79
1N5561B	♦△CRL IDC SCN TSC	182- 80
1N5562	♦△CRL APD IDC TSC	186- 12
1N5562A	♦△CRL IDC SCN TSC	186- 13
1N5562B	♦△CRL IDC SCN TSC	186- 14
1N5563	♦△CRL APD IDC TSC	188- 87
1N5563A	♦△CRL IDC SCN TSC	188- 88

TYPE No.	MFRS	Pg&Line
1N5563B	♦△CRL IDC SCN TSC	188- 89
1N5564	♦△CRL APD IDC TSC	190- 80
1N5564A	♦△CRL IDC SCN TSC	190- 81
1N5564B	♦△CRL IDC SCN TSC	190- 82
1N5565	♦△CRL APD IDC TSC	192-155
1N5565A	♦△CRL IDC SCN TSC	192-156
1N5565B	♦△CRL IDC SCN TSC	192-157
1N5566	♦△CRL APD IDC TSC	195- 19
1N5566A	♦△CRL IDC SCN TSC	195- 20
1N5566B	♦△CRL IDC SCN TSC	195- 21
1N5567	♦△CRL APD IDC TSC	197-171
1N5567A	♦△CRL IDC SCN TSC	197-172
1N5567B	♦△CRL IDC SCN TSC	197-173
1N5568	♦△CRL APD IDC TSC	199-157
1N5568A	♦△CRL IDC SCN TSC	199-158
1N5568B	♦△CRL IDC SCN TSC	199-159
1N5569	♦△CRL APD IDC TSC	202- 79
1N5569A	♦△CRL IDC SCN TSC	202- 80
1N5569B	△CRL IDC SCN TSC	202- 81
1N5570	△CRL APD IDC TSC	205- 28
1N5570A	△CRL IDC SCN TSC	205- 29
1N5570B	△CRL IDC SCN TSC	205- 30
1N5571	△CRL APD IDC TSC	207- 7
1N5571A	△CRL IDC SCN TSC	207- 8
1N5571B	△CRL IDC SCN TSC	207- 9
1N5572	△CRL APD IDC TSC	208-177
1N5572A	△CRL IDC SCN TSC	208-178
1N5572B	△CRL IDC SCN TSC	208-179
1N5573	△CRL APD IDC TSC	211- 70
1N5573A	△CRL IDC SCN TSC	211- 71
1N5573B	△CRL IDC SCN TSC	211- 72
1N5574	△CRL APD IDC TSC	213- 72
1N5574A	△CRL IDC SCN TSC	213- 73
1N5574B	△CRL IDC SCN TSC	213- 74
1N5575	△CRL APD IDC TSC	215- 39
1N5575A	△CRL IDC SCN TSC	215- 40
1N5575B	△CRL IDC SCN TSC	215- 41
1N5576	△CRL IDC TSC	216-149

TYPE No.	MFRS	Pg&Line
1N5576A	△CRL IDC SCN TSC	216-150
1N5576B	△CRL IDC SCN TSC	216-151
1N5577	△CRL IDC TSC	218- 48
1N5577A	△CRL IDC SCN TSC	218- 49
1N5577B	△CRL IDC SCN TSC	218- 50
1N5578	△CRL IDC TSC	219-124
1N5578A	△CRL IDC SCN TSC	219-125
1N5578B	△CRL IDC SCN TSC	219-126
1N5579	△CRL IDC TSC	221- 64
1N5579A	△CRL IDC SCN TSC	221- 65
1N5579B	△CRL IDC SCN TSC	221- 66
1N5580	△CRL IDC TSC	223- 15
1N5580A	△CRL IDC SCN TSC	223- 16
1N5580B	△CRL IDC SCN TSC	223- 17
1N5581	△CRL IDC TSC	224- 92
1N5581A	△CRL IDC SCN TSC	224- 93
1N5581B	△CRL IDC SCN TSC	224- 94
1N5582	♦△CRL IDC TSC	226- 45
1N5582A	♦△CRL IDC SCN TSC	226- 46
1N5582B	♦△CRL IDC SCN TSC	226- 47
1N5583	♦△CRL IDC TSC	227-101
1N5583A	♦△CRL IDC SCN TSC	227-102
1N5583B	♦△CRL IDC SCN TSC	227-103
1N5584	♦△CRL IDC TSC	229- 17
1N5584A	♦△CRL IDC SCN TSC	229- 18
1N5584B	♦△CRL IDC SCN TSC	229- 19
1N5585	♦△CRL IDC TSC	230- 97
1N5585A	♦△CRL IDC SCN TSC	230- 98
1N5585B	♦△CRL IDC SCN TSC	230- 99
1N5586	♦△CRL IDC TSC	232- 36
1N5586A	♦△CRL IDC SCN TSC	232- 37
1N5586B	♦△CRL IDC SCN TSC	232- 38
1N5587	♦△CRL IDC TSC	233- 76
1N5587A	♦△CRL IDC SCN TSC	233- 77
1N5587B	♦△CRL IDC SCN TSC	233- 78
1N5588	♦△CRL IDC TSC	235- 44
1N5588A	♦△CRL IDC SCN TSC	235- 45
1N5588B	♦△CRL IDC SCN TSC	235- 46
1N5589	♦△CRL IDC TSC	236- 68
1N5589A	♦△CRL IDC SCN TSC	236- 69
1N5589B	♦△CRL IDC SCN TSC	236- 70
1N5590	♦△CRL IDC TSC	237-107
1N5590A	♦△CRL	237-108

cont next page

△-Registered with JEDEC by this manufacturer

♦-Copy of mfr's data sheet may be ordered from D.A.T.A.

1. TYPE No. CROSS INDEX

IN TYPE NUMBER SEQUENCE

TYPE No.	MFRS	Pg&Line
1N5590A		
(cont)	IDC	
	SCN	
	TSC	
1N5590B	♦△CRL	237-109
	IDC	
	SCN	
	TSC	
1N5591	♦△CRL	239- 82
	IDC	
	TSC	
1N5591A	♦△CRL	239- 83
	IDC	
	SCN	
	TSC	
1N5591B	♦△CRL	239- 84
	IDC	
	SCN	
	TSC	
1N5592	♦△CRL	240-110
	IDC	
	TSC	
1N5592A	♦△CRL	240-111
	IDC	
	SCN	
	TSC	
1N5592B	♦△CRL	240-112
	IDC	
	SCN	
	TSC	
1N5593	♦△CRL	242- 50
	IDC	
	TSC	
1N5593A	♦△CRL	242- 51
	IDC	
	SCN	
	TSC	
1N5593B	♦△CRL	242- 52
	IDC	
	SCN	
	TSC	
1N5594	♦△CRL	243- 90
	IDC	
	TSC	
1N5594A	♦△CRL	243- 91
	IDC	
	SCN	
	TSC	
1N5594B	♦△CRL	243- 92
	IDC	
	SCN	
	TSC	
1N5595	△UNI	400- 2
	SSI	
1N5596	△UNI	403- 16
	SSI	
1N5597	△UNI	406- 29
	SSI	
1N5598	△UNI	408- 59
	SSI	
1N5599	△UNI	392- 71
	SSI	
1N5600	△UNI	400- 4
	SSI	
1N5601	△UNI	403- 17
	SSI	
1N5602	△UNI	392- 72
	SSI	
1N5603	△UNI	400- 18
	SSI	
1N5604	△UNI	403- 21
	SSI	
1N5605	△ITT	251- 98
	APD	
	TSC	
1N5606	△ITT	255- 71
	IDC	
	TSC	
1N5607	△ITT	256- 99
	IDC	
	TSC	
1N5608	△ITT	280- 51
	IDC	
	TSC	
1N5609	△ITT	280- 52
	IDC	
	TSC	
1N5610	♦△UNI	594- 53
	GSE	
JAN1N5610	none	248- 51
1N5611	♦△UNI	594- 54
	GSE	
JAN1N5611	none	249- 37
1N5612	♦△UNI	594- 55
	GSE	
JAN1N5612	none	249- 77
1N5613	♦△UNI	594- 56
	GSE	
JAN1N5613	none	256- 81
1N5614	♦△SET	283- 46
	GIC	
	SSI	
JAN1N5614	SET	283- 47
1N5615	♦△SET	282- 47
	GIC	
	SSI	
JAN1N5615	SET	282- 48
1N5616	♦△SET	285- 97
	GIC	
	SSI	
JAN1N5616	SET	285- 98
1N5617	♦△SET	285- 20
	GIC	
	SSI	
JAN1N5617	SET	285- 21
1N5618	♦△SET	287- 47
	GIC	
	SSI	
JAN1N5618	SET	287- 48
1N5619	♦△SET	287- 5
	GIC	
	SSI	
JAN1N5619	SET	287- 6
1N5620	♦△SET	287-104
	GIC	
	SSI	
JAN1N5620	SET	287-105
1N5621	♦△SET	287- 86
	GIC	
	SSI	
JAN1N5621	SET	287- 87
1N5622	♦△SET	288- 51
	GIC	
	SSI	
JAN1N5622	SET	288- 52
1N5623	♦△SET	288- 36
	GIC	
	SSI	
JAN1N5623	SET	288- 37
1N5624	♦△GESY	257- 58
	GIC	
	SSI	
JAN1N5624	none	283- 60

TYPE No.	MFRS	Pg&Line
1N5625	♦△GESY	259- 74
	GIC	
	SSI	
JAN1N5625	none	286- 3
1N5626	♦△GESY	260- 19
	GIC	
	SSI	
JAN1N5626	none	287- 64
1N5627	♦△GESY	260- 49
	GIC	
	SSI	
JAN1N5627	none	288- 6
1N5629	♦△GSE	175-162
	KSC	
	SCN	
1N5629A	♦△GSE	176-181
	KSC	
	SCN	
1N5630	♦△GSE	180- 33
	SCN	
1N5630A	♦△GSE	180- 34
	SCN	
1N5631	♦△GSE	182- 81
	SCN	
1N5631A	♦△GSE	182- 82
	SCN	
1N5632	♦△GSE	184-196
	SCN	
1N5632A	♦△GSE	186- 15
	SCN	
1N5633	♦△GSE	188- 90
	SCN	
1N5633A	♦△GSE	188- 91
	SCN	
1N5634	♦△GSE	190- 83
	SCN	
1N5634A	♦△GSE	190- 84
	SCN	
1N5635	♦△GSE	192-158
	SCN	
1N5635A	♦△GSE	192-159
	SCN	
1N5636	♦△GSE	195- 22
	SCN	
1N5636A	♦△GSE	195- 23
	SCN	
1N5637	♦△GSE	197-174
	SCN	
1N5637A	♦△GSE	197-175
	SCN	
1N5638	♦△GSE	199-160
	SCN	
1N5638A	♦△GSE	199-161
	SCN	
1N5639	♦△GSE	202- 82
	SCN	
1N5639A	♦△GSE	202- 83
	SCN	
1N5640	♦△GSE	205- 31
	SCN	
1N5640A	♦△GSE	205- 32
	SCN	
1N5641	♦△GSE	207- 10
	SCN	
1N5641A	♦△GSE	207- 11
	SCN	
1N5642	♦△GSE	208-180
	SCN	
1N5642A	♦△GSE	208-181
	SCN	
1N5643	♦△GSE	211- 73
	SCN	
1N5643A	♦△GSE	211- 74
	SCN	
1N5644	♦△GSE	213- 75
	SCN	
1N5644A	♦△GSE	213- 76
	SCN	
1N5645	♦△GSE	215- 42
	SCN	
1N5645A	♦△GSE	215- 43
	SCN	
1N5646	♦△GSE	216-152
	SCN	
1N5646A	♦△GSE	216-153
	SCN	
1N5647	♦△GSE	218- 51
	SCN	
1N5647A	♦△GSE	218- 52
	SCN	
1N5648	♦△GSE	219-127
	SCN	
1N5648A	♦△GSE	219-128
	SCN	
1N5649	♦△GSE	221- 67
	SCN	
1N5649A	♦△GSE	221- 68
	SCN	
1N5650	♦△GSE	223- 18
	SCN	
1N5650A	♦△GSE	223- 19
	SCN	
1N5651	♦△GSE	224- 95
	SCN	
1N5651A	♦△GSE	224- 96
	SCN	
1N5652	♦△GSE	226- 48
	SCN	
1N5652A	♦△GSE	226- 49
	SCN	
1N5653	♦△GSE	227-104
	SCN	
1N5653A	♦△GSE	227-105
	SCN	
1N5654	♦△GSE	229- 20
	SCN	
1N5654A	♦△GSE	229- 21
	SCN	

TYPE No.	MFRS	Pg&Line
1N5655	♦△GSE	230-100
	SCN	
1N5655A	♦△GSE	230-101
	SCN	
1N5656	♦△GSE	231-145
	SCN	
1N5656A	♦△GSE	232- 39
	SCN	
1N5657	♦△GSE	233- 79
	SCN	
1N5657A	♦△GSE	233- 80
	SCN	
1N5658	♦△GSE	235- 47
	SCN	
1N5658A	♦△GSE	235- 48
	SCN	
1N5659	♦△GSE	236- 71
1N5659A	♦△GSE	236- 72
1N5660	♦△GSE	237-110
1N5660A	♦△GSE	237-111
1N5661	♦△GSE	239- 85
1N5661A	♦△GSE	239- 86
1N5662	♦△GSE	240-113
1N5662A	♦△GSE	240-114
1N5663	♦△GSE	241- 58
1N5663A	♦△GSE	241- 59
1N5664	♦△GSE	242- 53
1N5664A	♦△GSE	242- 54
1N5665	♦△GSE	243- 93
1N5665A	♦△GSE	243- 94
1N5666A	△HSC	165- 80
1N5667A	△HSC	165- 91
1N5668A	△HSC	165-110
1N5669A	△HSC	165-133
1N5670A	△HSC	165-186
1N5671A	△HSC	166- 63
1N5672A	△HSC	166-147
1N5673A	△HSC	167- 88
1N5674A	△HSC	168- 51
1N5675A	△HSC	169- 45
1N5676A	△HSC	170- 26
1N5677A	△HSC	171- 56
1N5678A	△HSC	172- 72
1N5681,A,B	♦TRW	536- 39
1N5682,A,B	♦TRW	539- 13
1N5683,A,B	♦TRW	540- 6
1N5684,A,B	♦TRW	543- 39
1N5685,A,B	♦TRW	544- 77
1N5686,A,B	♦TRW	547- 87
1N5687,A,B	♦TRW	549- 47
1N5688,A,B	♦TRW	552- 26
1N5689,A,B	♦TRW	553- 42
1N5690,A,B	♦TRW	555-106
1N5691,A,B	♦TRW	556- 92
1N5692,A,B	♦TRW	559- 25
1N5693,A,B	♦TRW	536- 40
1N5694,A,B	♦TRW	539- 14
1N5695,A,B	♦TRW	561-104
1N5696,A,B	♦TRW	536- 41
1N5697,A,B	♦TRW	539- 15
1N5698,A,B	♦TRW	540- 7
1N5699,A,B	♦TRW	543- 40
1N5700,A,B	♦TRW	544- 78
1N5701,A,B	♦TRW	547- 88
1N5702,A,B	♦TRW	549- 48
1N5703,A,B	♦TRW	552- 27
1N5704,A,B	♦TRW	553- 43
1N5705,A,B	♦TRW	555-107
1N5706,A,B	♦TRW	556- 93
1N5707,A,B	♦TRW	559- 26
1N5708,A,B	♦TRW	560- 18
1N5709,A,B	♦TRW	561- 30
1N5710,A,B	♦TRW	561-105
1N5711	△HPA	250- 78
1N5712	△HPA	246- 90
1N5713	△HPA	246- 61
1N5714	♦△CRY	562- 79
1N5715	♦△CRY	562-107
1N5716	♦△CRY	563- 37
1N5717	♦△CRY	563- 38
1N5718	♦△CRY	563- 63
1N5719	△HPA	255- 96
1N5729B	♦APX	171-134
1N5730B	♦APX	172-174
1N5731B	♦APX	174-157
1N5732B	♦APX	177- 33
1N5733B	♦APX	179- 86
1N5734B	♦APX	181-142
1N5735B	♦APX	185- 66
1N5736B	♦APX	187-133
1N5737B	♦APX	189-169
1N5738B	♦APX	192- 13
1N5739B	♦APX	194- 98
1N5740B	♦APX	197- 45
1N5741B	♦APX	199- 50
1N5742B	♦APX	201-130
1N5743B	♦APX	204-103
1N5744B	♦APX	206- 72
1N5745B	♦APX	208- 70
1N5746B	♦APX	210-131
1N5747B	♦APX	212-172
1N5748B	♦APX	214-121
1N5749B	♦APX	216- 75
1N5750B	♦APX	217-149
1N5751B	♦APX	219- 54
1N5752B	♦APX	220-176
1N5753B	♦APX	222-131
1N5754B	♦APX	224- 23
1N5755B	♦APX	225-162
1N5756B	♦APX	227- 32
1N5757B	♦APX	228-132
1NJ27	FCAJ	370- 37
1P541	GELC	247- 93
1P542	GELC	247- 94

TYPE No.	MFRS	Pg&Line
1R8 2,A,B	SOD	182- 83
1R9 1,A,B	SOD	186- 16
1R10,A,B	SOD	188- 92
1R11,A,B	SOD	190- 85
1R12,A,B	SOD	192-160
1R13,A,B	SOD	195- 24
1R15,A,B	SOD	197-176
1R16,A,B	SOD	199-162
1R18,A,B	SOD	202- 84
1R20,A,B	SOD	205- 33
1R22,A,B	SOD	207- 12
1R24,A,B	SOD	208-182
1R27,A,B	SOD	211- 75
1R30,A,B	SOD	213- 77
1R33,A,B	SOD	215- 44
1R36,A,B	SOD	216-154
1R39,A,B	SOD	218- 53
1R43,A,B	SOD	219-129
1R47,A,B	SOD	221- 69
1R51,A,B	SOD	223- 20
1R56,A,B	SOD	224- 97
1R62,A,B	SOD	226- 50
1R68,A,B	SOD	227-106
1R75,A,B	SOD	229- 22
1R82,A,B	SOD	230-102
1R91,A,B	SOD	232- 40
1R100,A,B	SOD	233- 81
1R110,A,B	SOD	235- 49
1R120,A,B	SOD	236- 73
1R130,A,B	SOD	237-112
1R140,A,B	SOD	238-104
1R150,A,B	SOD	239- 87
1R160,A,B	SOD	240-115
1R175,A,B	SOD	241-116
1R180,A,B	SOD	242- 55
1R200,A,B	SOD	243- 95
1RC20	INRB	433- 12
1RC40	INRB	449- 24
1RC60	INRB	462-101
1RM80	♦ESMF	403- 98
	MISI	
1RM150	♦ESMF	408- 60
	MISI	
1RM250	♦ESMF	411- 36
	MISI	
1S12	MATJ	592- 45
1S13	MATJ	247- 95
1S15	MATJ	247- 96
1S17	MATJ	254- 48
1S18	MATJ	254- 49
1S020	TIIB	301- 73
	TIID	TIIF
1S021	TIIB	312- 70
	TIID	TIIF
1S023	TIIB	331- 56
	TIID	TIIF
1S025	TIIB	348- 81
	TIID	TIIF
1S027	TIIB	361- 50
	TIID	TIIF
1S030	TIIB	293- 76
1S031	TIIB	300- 28
1S032	TIIB	311- 4
1S32	♦DETM	252- 27
	TOSJ	
1S33	♦DETM	254- 89
	TOSJ	
1S034	TIIB	329- 89
1S34	♦DETM	252- 28
	TOSJ	
1S036	TIIB	347- 10
1S038	TIIB	360- 6
1S40	FCAJ	300- 29
1S41	FCAJ	311- 5
1S42	FCAJ	321- 35
1S43	FCAJ	329- 90
1S44△	TIIB	269- 33
1S44⊠	FCAJ	340- 8
1S45	FCAJ	347- 11
1S46	FCAJ	355- 40
1S47	FCAJ	359- 93
1S73	TOSJ	266- 10
1S75	NJRC	247-100
1S76	NJRC	249- 54
1S77	HITJ	273- 77
1S78	HITJ	269- 75
1S79	HITJ	266- 2
1S83	HITJ	298- 70
1S84	HITJ	283- 48
1S85	HITJ	246- 4
1S100⊠	TIIB	300- 30
	TIID	TIIF
1S101⊠	TIIB	311- 6
	TIID	TIIF
1S103⊠	TIIB	329- 91
	TIID	TIIF
1S105⊠	TIIB	347- 12
	TIID	TIIF
1S107⊠	TIIB	360- 7
	TIID	TIIF
1S109⊠	TIIB	370- 52
	TIID	TIIF
1S111⊠	TIIB	318- 93
	TIID	TIIF
1S112⊠	TIIB	320- 63
1S113⊠	TIIB	328- 62
	TIID	TIIF
1S115⊠	TIIB	346- 12
	TIID	TIIF
1S117	TIIB	359- 30
	TIID	TIIF
1S120⊠	TIIB	292- 92
1S121⊠	TIIB	307- 52

TYPE No.	MFRS	Pg&Line
1S130△	TIIB	250- 45
	TIID	♦TIIF
1S131△	TIIB	254- 8
	TIID	♦TIIF
1S132△	TIIB	257- 23
	TIID	♦TIIF
1S134△	TIIB	259- 49
	TIID	♦TIIF
1S136△	TIIB	260- 5
	TIID	♦TIIF
1S138△	TIIB	260- 38
	TIID	♦TIIF
1S144⊠	TOSJ	598- 19
1S146	FCAJ	299- 99
1S147	FCAJ	310- 68
1S148	FCAJ	320-110
1S149	FCAJ	329- 36
1S150	FCAJ	339- 82
1S150R06	♦TIIB	401- 61
1S150R08	♦TIIB	404- 11
1S150R10	♦TIIB	406- 50
1S151	NECJ	301- 74
1S152	NECJ	312- 71
1S153	NECJ	322- 36
1S154	NECJ	331- 57
1S155	NECJ	341- 5
1S156	NECJ	348- 82
1S160	NECJ	296- 42
1S161	NECJ	304- 13
1S162	NECJ	315- 38
1S163	NECJ	324- 32
1S164	NECJ	334- 37
1S165	NECJ	342- 83
1S166	NECJ	351- 47
1S170	NECJ	296-109
1S171	NECJ	304- 99
1S172	NECJ	316- 24
1S173	NECJ	324-102
1S174	NECJ	335- 27
1S175	NECJ	343- 43
1S176	NECJ	352- 26
1S180	♦DETM	250- 28
1S181	♦DETM	253-110
1S182	♦DETM	257- 9
1S183	♦DETM	258- 75
1S186	TSAJ	251- 3
1S187	TSAJ	253- 82
1S188	TSAJ	249- 2
1S189	TSAJ	250- 2
1S190	NJRC	171- 72
1S191	NJRC	173-198
1S192	NJRC	178-175
1S193	NJRC	181- 57
1S194	NJRC	184-117
1S195	NJRC	187-134
1S196	NJRC	189-170
1S197	NJRC	192- 14
1S198	NJRC	196-161
1S199	NJRC	201-131
1S204	NJRC	319- 11
1S205	NJRC	327- 24
1S206	NJRC	338- 39
1S207	NJRC	345- 46
1S208/2SJ2A	NJRC	319- 17
1S209/2SJ4A	NJRC	338- 41
1S210/2SJ6A	NJRC	354- 99
1S211/2SJ8A	NJRC	366- 94
1S212	TOSJ	183-200
1S213	TOSJ	183-201
1S214	TOSJ	183-202
1S215	TOSJ	187- 24
1S216	TOSJ	187- 25
1S220	TOSJ	170- 31
1S221	TOSJ	172- 82
1S222	TOSJ	176-147
1S223	TOSJ	180- 35
1S224	TOSJ	183-209
1S225	TOSJ	187- 47
1S226	TOSJ	190- 86
1S227	TOSJ	192-161
1S228	TOSJ	195- 25
1S229	TOSJ	196- 77
1S230	TOSJ	197-177
1S231	TOSJ	199-163
1S232	TOSJ	201- 30
1S233	TOSJ	202- 85
1S234	TOSJ	203-168
1S235	TOSJ	205- 34
1S236	TOSJ	207- 13
1S237	TOSJ	208-183
1S238	TOSJ	210- 36
1S239	TOSJ	211- 76
1S240	TOSJ	213- 78
1S241	TOSJ	215- 45
1S242	TOSJ	216-155
1S243	TOSJ	218- 54
1S244	TOSJ	219-130
1S245	TOSJ	220- 89
1S246	TOSJ	221- 70
1S247	TOSJ	222- 58
1S248	TOSJ	223-153
1S249	TOSJ	224- 98
1S250	TOSJ	226- 51
1S251	TOSJ	227-107
1S252	TOSJ	229- 23
1S253	TOSJ	230-103
1S254	TOSJ	232- 41
1S255	TOSJ	233- 82
1S256	TOSJ	234- 97
1S257	TOSJ	235- 50
1S258	TOSJ	236- 74
1S259	TOSJ	237-113
1S260	TOSJ	238-105
1S261	TOSJ	239- 88

△-Registered with JEDEC by this manufacturer

♦-Copy of mfr's data sheet may be ordered from D.A.T.A.

1. TYPE No. CROSS INDEX

IN TYPE NUMBER SEQUENCE

TYPE No.	MFRS	Pg&Line
1S262	TOSJ	170- 33
1S263	TOSJ	172- 86
1S264	TOSJ	176-150
1S265	TOSJ	180-170
1S266	TOSJ	184- 4
1S267	TOSJ	187- 50
1S268	TOSJ	191- 34
1S269	TOSJ	193-148
1S270	TOSJ	195-167
1S271	TOSJ	196-145
1S272	TOSJ	198-149
1S273	TOSJ	200-106
1S274	TOSJ	201- 67
1S275	TOSJ	203- 41
1S276	TOSJ	204- 27
1S277	TOSJ	205-174
1S278	TOSJ	207-164
1S279	TOSJ	209-134
1S280	TOSJ	210- 71
1S281	TOSJ	212- 34
1S282	TOSJ	214- 33
1S283	TOSJ	215-192
1S284	TOSJ	217- 82
1S285	TOSJ	218-154
1S286	TOSJ	220- 43
1S287	TOSJ	220-139
1S288	TOSJ	221-177
1S289	TOSJ	222-109
1S290	TOSJ	223-184
1S291	TOSJ	225- 34
1S292	TOSJ	226-146
1S293	TOSJ	228- 31
1S294	TOSJ	229-130
1S295	TOSJ	231- 20
1S296	TOSJ	232-130
1S297	TOSJ	234- 22
1S298	TOSJ	234-130
1S299	TOSJ	235-142
1S300	TOSJ	237- 6
1S301	TOSJ	238- 33
1S302	TOSJ	238-160
1S303	TOSJ	240- 20
1S306	NECJ	268- 55
1S307	NECJ	265-100
1S310	HITJ	293- 34
1S311	HITJ	299- 75
1S312	HITJ	310- 39
1S313	HITJ	320- 88
1S314	HITJ	328-107
1S315	HITJ	339- 53
1S330	NJRC	171- 65
1S331	NJRC	173-192
1S332	NJRC	178-170
1S333	NJRC	181- 50
1S334	NJRC	184-105
1S335	NJRC	187- 94
1S336	NJRC	189-139
1S337	NJRC	191-176
1S338	NJRC	196-160
1S339	NJRC	201- 98
1S351	NJRC	544- 19
1S351M	NJRC	544- 20
1S351S	NJRC	543- 6
1S352	NJRC	548-103
1S352M	NJRC	548-104
1S352N	NJRC	548-105
1S353	NJRC	553- 20
1S357	NJRC	249- 49
1S358	NJRC	307- 48
1S358S	NJRC	292- 80
1S360	NECJ	534- 73
1S361	NECJ	533- 21
1S362,3	NECJ	530- 62
1S410	TIIB	303- 18
TIID	TIIF	
1S411	TIIB	314- 27
TIID	TIIF	
1S413	TIIB	333- 20
TIID	TIIF	
1S415	TIIB	350- 38
TIID	TIIF	
1S417	TIIB	362- 94
TIID	TIIF	
1S419	TIIB	372-101
TIID	TIIF	
1S420	TIIB	304- 6
TIID	TIIF	
1S421	TIIB	315- 31
TIID	TIIF	
1S423	TIIB	334- 30
TIID	TIIF	
1S425	TIIB	351- 43
TIID	TIIF	
1S426	TSAJ	246- 38
1S427	TIIB	363- 85
TIID	TIIF	
1S430	TIIB	295- 84
1S431	TIIB	303- 19
1S431R	NECJ	305-109
1S432	TIIB	314- 28
1S432R	NECJ	317- 54
1S433R	NECJ	325- 92
1S434	TIIB	333- 21
1S434R	NECJ	336- 79
1S435R	NECJ	344- 17
1S436	TIIB	350- 39
1S436R	NECJ	353- 43
1S438	TIIB	362- 95
1S438R	NECJ	365- 55
1S440R	NECJ	374-106
1S441△	TIIB	292- 18
1S441⧄	FCAJ	249- 50
1S442△	TIIB	292- 30
1S442⧄	FCAJ	249- 38

TYPE No.	MFRS	Pg&Line
1S443△	TIIB	292- 72
1S443⧄	FCAJ	269- 90
1S444△	TIIB	298- 38
1S444⧄	FCAJ	267- 96
1S445△	TIIB	298- 74
1S445⧄	FCAJ	274- 27
1S446△	TIIB	307- 30
1S446⧄	FCAJ	250- 98
1S447	FCAJ	252- 35
1S448	FCAJ	254- 53
1S449	FCAJ	254- 55
1S450	FCAJ	255- 55
1S451	FCAJ	250- 99
1S452	FCAJ	252- 36
1S453	FCAJ	252- 41
1S454	FCAJ	592- 46
1S455	FCAJ	592- 47
1S456	FCAJ	292- 68
1S457	FCAJ	298- 69
1S458	FCAJ	307- 49
1S459	FCAJ	309- 58
1S460	FCAJ	266- 14
1S470	FCAJ	173-193
1S471	FCAJ	178-171
1S472	FCAJ	184-106
1S473	FCAJ	189-140
1S474	FCAJ	196- 23
1S475	FCAJ	201- 99
1S476	FCAJ	208- 16
1S477	FCAJ	212- 90
1S478	FCAJ	216- 69
1S479	FCAJ	220-149
1S480	FCAJ	174- 10
1S481	FCAJ	178-180
1S482	FCAJ	184-186
1S483	FCAJ	190- 87
1S484	FCAJ	196- 78
1S485	FCAJ	202- 86
1S486	FCAJ	208- 17
1S487	FCAJ	212-117
1S488	FCAJ	216-156
1S489	FCAJ	220-150
1S490	FCAJ	174- 14
1S491	FCAJ	178-185
1S492	FCAJ	184-192
1S493	FCAJ	190-178
1S494	FCAJ	196-112
1S495	FCAJ	202-176
1S496	FCAJ	208- 24
1S497	FCAJ	212-122
1S498	FCAJ	217- 27
1S499	FCAJ	220-153
1S500	FCAJ	269- 88
1S501	FCAJ	269- 89
1S544	NECJ	363- 87
1S545	NECJ	373- 68
1S546	NECJ	364- 53
1S547	NECJ	374- 25
1S553	TSAJ	544- 37
1S554	TSAJ	548- 29
1S555	TSAJ	551- 66
1S556	TSAJ	553- 22
1S557	TSAJ	359- 73
1S558	TSAJ	339- 64
1S559	TSAJ	320- 97
1S560	HITJ	265- 21
1S689	♦HITJ	314- 79
1S689A	♦HITJ	320- 10
1S735R	NECJ	344- 87
1S736R	NECJ	354- 8
1S738R	NECJ	366- 12
1S740R	NECJ	375- 55
1S742R	NECJ	380- 53
1S750	♦HITJ	575- 9
1S751	FCAJ	314- 56
1S752	HITJ	166- 8
1S753	HITJ	167- 89
1S754	HITJ	169- 48
1S755	HITJ	171- 40
1S756	HITJ	173-169
1S757	HITJ	179- 5
1S758	HITJ	184- 64
1S759	HITJ	189-112
1S760	HITJ	194- 12
1S761	HITJ	199- 5
1S762	HITJ	203-112
1S763	HITJ	208- 34
1S764	HITJ	212-135
1S765	HITJ	216- 49
1S844	NECJ	330- 68
1S846	NECJ	347- 95
1S848	NECJ	360- 78
1S850	NECJ	371- 6
1S892	SAKJ	547- 25
1S893	SAKJ	548-106
1S920	TIIB	250- 49
TIID	♦TIIF	
1S921△	TIIB	254- 18
TIID	♦TIIF	
1S921⧄	SHEJ	312- 99
1S922△	TIIB	256- 30
TIID	♦TIIF	
1S922⧄	SHEJ	331- 84
1S923△	TIIB	257- 34
TIID	♦TIIF	
1S923⧄	SHEJ	348-108
1S924	SHEJ	361- 74
1S925	SHEJ	371-103
1S926	SHEJ	315- 5
1S927	SHEJ	334- 4
1S928	SHEJ	351- 19
1S929	SHEJ	363- 65
1S930	SHEJ	373- 52
1S931	SHEJ	316- 14

TYPE No.	MFRS	Pg&Line
1S932	SHEJ	335- 17
1S933	SHEJ	352- 17
1S934	SHEJ	364- 48
1S935	SHEJ	374- 19
1S936	SHEJ	316- 94
1S937	SHEJ	335-104
1S938	SHEJ	352- 90
1S939	SHEJ	364- 99
1S940△	TIIB	248- 18
1S940⧄	SHEJ	374- 58
1S941△	TIIB	250- 15
1S941⧄	SHEJ	317- 45
1S942△	TIIB	252- 44
1S942⧄	SHEJ	336- 68
1S943	SHEJ	353- 36
1S944	SHEJ	365- 49
1S945	SHEJ	374- 99
1S951△	TIIB	274- 42
	TIIF	
1S951#	NECJ	268- 82
1S952△	NECJ	268- 83
1S952#	TIIB	276- 75
1S953△	NECJ	268- 84
1S953#	TIIB	274- 40
1S954	NECJ	276- 13
1S955	NECJ	280- 16
1S960	TIIB	271- 55
1S961	TIIB	277-104
1S990	NJRC	165- 26
1S991	NJRC	165- 61
1S992	NJRC	165-111
1S993	NJRC	166- 81
1S994	NJRC	169- 29
1S995	NJRC	539- 76
1S996A	NJRC	598- 20
1S996B	NJRC	598- 21
1S998A	NJRC	598- 22
1S998B	NJRC	598- 23
1S1001	NJRC	265-106
1S1009	NJRC	247- 70
1S1010	NJRC	248- 15
1S1061	ORIJ	300- 99
1S1062	ORIJ	311- 87
1S1063	ORIJ	330- 69
1S1064	ORIJ	347- 96
1S1065	ORIJ	360- 79
1S1066	ORIJ	371- 7
1S1071	ORIJ	301-102
1S1072	ORIJ	312-102
1S1073	ORIJ	331- 88
1S1074	ORIJ	349- 2
1S1075	ORIJ	361- 78
1S1076	ORIJ	371-107
1S1198A	NECJ	569- 61
1S1199A	NECJ	569- 59
1S1200A	NECJ	569- 53
1S1213	NECJ	273- 13
1S1214	NECJ	273- 14
1S1215	NECJ	269- 87
1S1216	NECJ	268- 21
1S1217	NECJ	276- 12
1S1218	NECJ	279- 99
1S1219	HITJ	267- 45
1S1220	HITJ	267- 46
1S1221	SHEJ	310- 26
1S1222	SHEJ	346- 38
1S1223	SHEJ	369-102
1S1224	SHEJ	345- 81
1S1225	SHEJ	358-110
1S1225A	SHEJ	369- 39
1S1226	SHEJ	384- 8
1S1230	HITJ	328-108
1S1231	HITJ	339- 54
1S1232	HITJ	346- 50
1S1233	HITJ	359- 60
1S1234	HITJ	370- 5
1S1237	TOSJ	284- 62
1S1238	TOSJ	286- 59
1S1288	♦DETM	304- 91
1S1302	NECJ	274- 39
1S1303	NECJ	273- 57
1S1305	NECJ	280- 70
1S1333R	NECJ	354- 73
1S1334R	NECJ	366- 71
1S1335R	NECJ	376- 5
1S1336R	NECJ	381- 4
1S1337R	NECJ	383- 78
1S1338R	NECJ	387- 51
1S1339R	NECJ	388- 95
1S1342	MITJ	300- 55
1S1343	MITJ	311- 38
1S1344	MITJ	321- 60
1S1345	MITJ	330- 17
1S1346	MITJ	347- 44
1S1347	MITJ	360- 30
1S1348	MITJ	370- 73
1S1349	MITJ	378- 5
1S1351	MITJ	302- 64
1S1352	MITJ	313- 70
1S1353	MITJ	323- 6
1S1354	MITJ	332- 56
1S1355	MITJ	349- 76
1S1356	MITJ	362- 26
1S1357	MITJ	372- 50
1S1358	MITJ	378- 95
1S1417	TOSJ	364- 67
1S1418	TOSJ	374- 37
1S1419	TOSJ	379- 72
1S1420H	♦HITJ	248- 11
1S1465	TOSJ	257- 60
1S1473	HITJ	267- 47
1S1500	NJRC	533- 79
1S1501	NJRC	538- 99
1S1502	NJRC	544- 79

TYPE No.	MFRS	Pg&Line
1S1503	NJRC	551- 73
1S1514	TOSJ	253- 44
1S1515	TOSJ	250- 80
1S1516	TOSJ	250- 79
1S1517	TOSJ	288- 81
1S1517A	TOSJ	288- 99
1S1540	TOSJ	229-152
1S1541	TOSJ	231-143
1S1542	TOSJ	234-139
1S1543	TOSJ	240- 40
1S1544	NECJ	267- 88
1S1545	NECJ	267- 89
1S1551	TOSJ	539- 66
1S1552	TOSJ	548- 25
1S1553	TOSJ	252- 21
1S1554	TOSJ	250- 81
1S1555	TOSJ	248- 73
1S1556	TOSJ	539- 67
1S1557	TOSJ	548- 26
1S1558	TOSJ	553- 23
1S1561	TOSJ	523-100
1S1562	TOSJ	527- 24
1S1563	TOSJ	529- 19
1S1564	TOSJ	532- 20
1S1571	TOSJ	523-101
1S1572	TOSJ	527- 25
1S1573	TOSJ	529- 20
1S1574	TOSJ	532- 21
1S1575	TOSJ	334- 57
1S1576	TOSJ	351- 69
1S1577	TOSJ	363-102
1S1578	TOSJ	373- 84
1S1579	TOSJ	251- 8
1S1580	TOSJ	248- 61
1S1581	TOSJ	520- 19
1S1585	TOSJ	276- 71
1S1586	TOSJ	273- 16
1S1587	TOSJ	273- 17
1S1588	TOSJ	268- 57
1S1614	TOSJ	365- 17
1S1615	TOSJ	374- 73
1S1616	TOSJ	379-100
1S1617	NECJ	519- 1
1S1618	NECJ	519- 2
1S1619	NECJ	519- 3
1S1621	TOSJ	281- 61
1S1626	TOSJ	363- 36
1S1627	TOSJ	373- 30
1S1628	TOSJ	379- 30
1S1629	TOSJ	362-100
1S1630	TOSJ	372-105
1S1631	TOSJ	379- 3
1S1640	♦DETM	304- 68
	TOSJ	
1S1641	♦DETM	304-100
	TOSJ	
1S1643	TOSJ	308- 59
1S1644	TOSJ	325- 52
1S1645	TOSJ	308- 76
1S1646	TOSJ	325- 89
1S1647	TOSJ	308-100
1S1648	TOSJ	326- 27
1S1650	TOSJ	248- 97
1S1651	TOSJ	248- 98
1S1652	TOSJ	308- 16
1S1653	TOSJ	324- 45
1S1654	TOSJ	308- 37
1S1655	TOSJ	325- 3
1S1658	TOSJ	246-101
1S1660	TOSJ	307-106
1S1661	TOSJ	323- 38
1S1662	TOSJ	308- 5
1S1663	TOSJ	323-102
1S1676	NECJ	568- 79
1S1677	NECJ	568- 78
1S1721	TOSJ	510- 86
1S1760	♦NECJ	570-105
1S1761	♦NECJ	570-107
1S1762	♦NECJ	571- 59
1S1763	♦NECJ	571- 60
1S1764	♦NECJ	573- 2
1S1765	♦NECJ	561- 15
1S1807	TOSJ	575- 10
1S1841	TOSJ	335- 57
1S1842	TOSJ	352- 50
1S1843	TOSJ	364- 66
1S1844	TOSJ	374- 36
1S1849	SAKJ	302- 4
1S1850	SAKJ	313- 5
1S1851	SAKJ	331-101
1S1855	♦NECJ	266- 34
1S1856	♦NECJ	266- 24
1S1857	♦NECJ	265- 55
1S1860	NECJ	575- 11
1S1885	TOSJ	301- 11
1S1886	TOSJ	312- 8
1S1887	TOSJ	330- 99
1S1888	TOSJ	348- 17
1S1890	TOSJ	348- 68
1S1891	TOSJ	361- 39
1S1892	TOSJ	371- 74
1S1894A	SAKJ	548-107
1S1894B	SAKJ	548-108
1S1894C	SAKJ	549- 1
1S1894D	SAKJ	549- 2
1S1895A	SAKJ	549- 3
1S1895B	SAKJ	549- 4
1S1895C	SAKJ	549- 5
1S1895D	SAKJ	549- 6
1S1922	NJRC	534-109
1S1923	NJRC	539- 61
1S1924	NJRC	543- 41
1S1925	NJRC	575- 12
1S1926	NJRC	575- 13

TYPE No.	MFRS	Pg&Line
1S1941	TOSJ	299- 74
1S1942	TOSJ	310- 38
1S1943	TOSJ	328-106
1S1944	TOSJ	346- 49
1S1991	SAKJ	581- 68
1S1992	NECJ	267- 4
1S1993	NECJ	265- 52
1S1994	NECJ	267- 5
1S1995	NECJ	265- 53
1S2030A	TIIB	166- 99
TIID	TIIF	
1S2033	TIIB	166-185
TIID	TIIF	
1S2033A	TIIB	166-186
TIID	TIIF	
1S2036	TIIB	167-141
TIID	TIIF	
1S2036A	TIIB	167-142
TIID	TIIF	
1S2039	TIIB	168- 95
TIID	TIIF	
1S2039A	TIIB	168- 96
TIID	TIIF	
1S2043	TIIB	169- 95
TIID	TIIF	
1S2043A	TIIB	169- 96
TIID	TIIF	
1S2047	TIIB	170- 89
TIID	TIIF	
1S2047A	TIIB	170- 90
TIID	TIIF	
1S2051	TIIB	171-135
TIID	TIIF	
1S2051A	TIIB	171-136
TIID	TIIF	
1S2056	TIIB	172-175
TIID	TIIF	
1S2056A	TIIB	172-176
TIID	TIIF	
1S2062	TIIB	174-158
TIID	TIIF	
1S2062A	TIIB	174-159
TIID	TIIF	
1S2067	NJRC	183-196
1S2068△	NJRC	183-197
1S2068⧄	TIIB	177- 34
TIID	TIIF	
1S2068A	TIIB	177- 35
TIID	TIIF	
1S2069	NJRC	183-198
1S2075	TIIB	179- 87
TIID	TIIF	
1S2075A	TIIB	179- 88
TIID	TIIF	
1S2082	TIIB	181-143
TIID	TIIF	
1S2082A	TIIB	181-144
TIID	TIIF	
1S2085	NECJ	543- 15
1S2086	NECJ	543- 16
1S2087	NECJ	543- 17
1S2088	NECJ	543- 18
1S2091△	TIID	185- 67
	TIIF	
1S2091⧄	TOSJ	256- 65
1S2091A	TIIB	185- 68
TIID	TIIF	
1S2092	TOSJ	254-107
1S2097	TOSJ	283- 81
1S2098	TOSJ	281- 56
1S2099	TOSJ	280- 68
1S2100	TIIB	187-135
TIID	TIIF	
1S2100A	TIIB	187-136
TIID	TIIF	
1S2110	TIIB	189-171
TIID	TIIF	
1S2110A	TIIB	189-172
TIID	TIIF	
1S2120	TIIB	192- 15
TIID	TIIF	
1S2120A	TIIB	192- 16
TIID	TIIF	
1S2130	TIIB	194- 99
TIID	TIIF	
1S2130A	TIIB	194-100
TIID	TIIF	
1S2139A	NJRC	535- 34
1S2139B	NJRC	539- 62
1S2139C	NJRC	544- 13
1S2144	SAKJ	269- 32
1S2147A	SAKJ	533- 88
1S2147B	SAKJ	533- 89
1S2147C	SAKJ	533- 90
1S2147D	SAKJ	533- 91
1S2150	TIIB	197- 46
TIID	TIIF	
1S2150A	TIIB	197- 47
TIID	TIIF	
1S2160A	TIIB	199- 51
TIID	TIIF	
1S2180	♦TIIB	201-132
TIID	TIIF	
1S2180A	♦TIIB	201-133
TIID	TIIF	
1S2186	TOSJ	247- 28
1S2190	NECJ	181- 99
1S2191	NECJ	181-100
1S2192	NECJ	181-101
1S2198	NECJ	575- 14
1S2199	NECJ	571- 76
1S2200	♦TIIB	204-104
TIID	TIIF	

△-Registered with JEDEC by this manufacturer

♦-Copy of mfr's data sheet may be ordered from D.A.T.A.

1. TYPE No. CROSS INDEX

IN TYPE NUMBER SEQUENCE

TYPE No.	MFRS	Pg&Line
1S2200A	♦TIIB	204-105
TIID	TIIF	
1S2201	NECJ	573- 44
1S2220	♦TIIB	206- 73
TIID	TIIF	
1S2220A	♦TIIB	206- 74
TIID	TIIF	
1S2236	TOSJ	246- 65
1S2237	TOSJ	410- 49
1S2240	♦TIIB	208- 71
TIID	TIIF	
1S2240A	♦TIIB	208- 72
TIID	TIIF	
1S2247	MITJ	345- 37
1S2248	MITJ	354- 78
1S2249	MITJ	366- 76
1S2250	MITJ	376- 10
1S2251	MITJ	381- 9
1S2252	MITJ	385- 81
1S2253	MITJ	390- 90
1S2254	MITJ	392- 85
1S2255	MITJ	394-105
1S2256	MITJ	375- 56
1S2257	MITJ	380- 54
1S2258	MITJ	385- 40
1S2259	MITJ	387- 4
1S2260	MITJ	388- 72
1S2261	MITJ	381- 23
1S2262	MITJ	387- 68
1S2263	MITJ	389- 1
1S2264	MITJ	390-102
1S2265	MITJ	392- 89
1S2266	MITJ	393- 51
1S2270	♦TIIB	210-132
TIID	TIIF	
1S2270A	♦TIIB	210-133
TIID	TIIF	
1S2300	♦TIIB	212-173
TIID	TIIF	
1S2300A	♦TIIB	212-174
TIID	TIIF	
1S2306	TOSJ	347- 49
1S2307	TOSJ	360- 33
1S2308	TOSJ	370- 76
1S2309	TOSJ	384- 80
1S2310	TOSJ	346- 5
1S2311	TOSJ	359- 26
1S2312	TOSJ	369- 83
1S2313	TOSJ	345- 86
1S2314	TOSJ	359- 4
1S2315	TOSJ	369- 46
1S2330	♦TIIB	214-122
TIID	TIIF	
1S2330A	♦TIIB	214-123
TIID	TIIF	
1S2342	MITJ	306- 51
1S2343	MITJ	318- 1
1S2344	MITJ	337- 39
1S2345	MITJ	344- 74
1S2346	MITJ	353-106
1S2347	MITJ	365-109
1S3006	TIIB	177-165
TIID	TIIF	
1S3007	TIIB	180- 36
TIID	TIIF	
1S3008	TIIB	182- 84
TIID	TIIF	
1S3009	TIIB	186- 17
TIID	TIIF	
1S3010	TIIB	188- 93
TIID	TIIF	
1S3011	TIIB	190- 88
TIID	TIIF	
1S3012	TIIB	192-162
TIID	TIIF	
1S3013	TIIB	195- 26
TIID	TIIF	
1S3015	TIIB	197-178
TIID	TIIF	
1S3016	TIIB	199-164
TIID	TIIF	
1S3018	TIIB	202- 87
TIID	TIIF	
1S3020	TIIB	205- 35
TIID	TIIF	
1S3022	TIIB	207- 14
TIID	TIIF	
1S3024	TIIB	208-184
TIID	TIIF	
1S3027	TIIB	211- 77
TIID	TIIF	
1S3030	TIIB	213- 79
TIID	TIIF	
1S3033	TIIB	215- 46
TIID	TIIF	
1S3036	TIIB	216-157
TIID	TIIF	
1S3039	TIIB	218- 55
TIID	TIIF	
1S3043	TIIB	219-131
TIID	TIIF	
1S3047	TIIB	221- 71
TIID	TIIF	
1S3051	TIIB	223- 21
TIID	TIIF	
1S3056	TIIB	224- 99
TIID	TIIF	
1S3062	TIIB	226- 52
TIID	TIIF	
1S3068	TIIB	227-108
TIID	TIIF	
1S3075	TIIB	229- 24
TIID	TIIF	

TYPE No.	MFRS	Pg&Line
1S3082	TIIB	230-104
TIID	TIIF	
1S3091	TIIB	232- 42
TIID	TIIF	
1S3100	TIIB	233- 83
TIID	TIIF	
1S3110	TIIB	235- 51
TIID	TIIF	
1S3120	TIIB	236- 75
TIID	TIIF	
1S3130	TIIB	237-114
TIID	TIIF	
1S3150	TIIB	239- 89
TIID	TIIF	
1S3160	TIIB	240-116
TIID	TIIF	
1S3180	TIIB	242- 56
TIID	TIIF	
1S3200	TIIB	243- 96
TIID	TIIF	
1S4006,A	TIIB	178- 48
1S4007,A	TIIB	180- 89
1S4008,A	TIIB	182-142
1S4009,A	TIIB	186- 71
1S4010,A	TIIB	188-158
1S4011,A	TIIB	190-142
1S4012,A	TIIB	193- 51
1S4013,A	TIIB	195- 81
1S4015,A	TIIB	198- 54
1S4016,A	TIIB	200- 30
1S4018,A	TIIB	202-146
1S4020,A	TIIB	205- 85
1S4022,A	TIIB	207- 70
1S4024,A	TIIB	209- 48
1S4027,A	TIIB	211-136
1S4030,A	TIIB	213-131
1S4033,A	TIIB	215-100
1S4036,A	TIIB	217- 7
1S4039,A	TIIB	218- 89
1S4043,A	TIIB	219-165
1S4047,A	TIIB	221-109
1S4051,A	TIIB	223- 52
1S4056,A	TIIB	224-139
1S4062,A	TIIB	226- 83
1S4068,A	TIIB	227-144
1S4075,A	TIIB	229- 57
1S4082,A	TIIB	230-138
1S4091,A	TIIB	232- 71
1S4100,A	TIIB	233-120
1S4110,A	TIIB	235- 81
1S4120,A	TIIB	236-108
1S4130,A	TIIB	237-142
1S4150,A	TIIB	239-124
1S4160,A	TIIB	240-142
1S4180,A	TIIB	242- 87
1S4200,A	TIIB	243-123
1S5015,A	TIIB	198-150
TIID	TIIF	
1S5015C	TIIB	198-151
TIID	TIIF	
1S5016,A	TIIB	200-107
TIID	TIIF	
1S5016C	TIIB	200-108
TIID	TIIF	
1S5018,A	TIIB	203- 42
TIID	TIIF	
1S5018C	TIIB	203- 43
TIID	TIIF	
1S5020,A	TIIB	205-175
TIID	TIIF	
1S5020C	TIIB	205-176
TIID	TIIF	
1S5022,A	TIIB	207-165
TIID	TIIF	
1S5022C	TIIB	207-166
TIID	TIIF	
1S5024,A	TIIB	209-135
TIID	TIIF	
1S5024C	TIIB	209-136
TIID	TIIF	
1S5027,A	TIIB	212- 35
TIID	TIIF	
1S5027C	TIIB	212- 36
TIID	TIIF	
1S5030,A	TIIB	214- 34
TIID	TIIF	
1S5030C	TIIB	214- 35
TIID	TIIF	
1S5033,A	TIIB	215-193
TIID	TIIF	
1S5033C	TIIB	215-194
TIID	TIIF	
1S5036,A	TIIB	217- 83
TIID	TIIF	
1S5036C	TIIB	217- 84
TIID	TIIF	
1S5039,A	TIIB	218-155
TIID	TIIF	
1S5039C	TIIB	218-156
TIID	TIIF	
1S5043,A	TIIB	220- 44
TIID	TIIF	
1S5043C	TIIB	220- 45
TIID	TIIF	
1S5047,A	TIIB	221-178
TIID	TIIF	
1S5047C	TIIB	221-179
TIID	TIIF	
1S5051,A	TIIB	223-114
TIID	TIIF	
1S5051C	TIIB	223-115
TIID	TIIF	
1S5056,A	TIIB	225- 35
TIID	TIIF	

TYPE No.	MFRS	Pg&Line
1S5056C	TIIB	225- 36
TIID	TIIF	
1S5062,A	TIIB	226-147
TIID	TIIF	
1S5062C	TIIB	226-148
TIID	TIIF	
1S5068,A	TIIB	228- 32
TIID	TIIF	
1S5068C	TIIB	228- 33
TIID	TIIF	
1S5075,A	TIIB	229-131
TIID	TIIF	
1S5075C	TIIB	229-132
TIID	TIIF	
1S5082,A	TIIB	231- 21
TIID	TIIF	
1S5082C	TIIB	231- 22
TIID	TIIF	
1S5091,A	TIIB	232-131
TIID	TIIF	
1S5091C	TIIB	232-132
TIID	TIIF	
1S5100,A	TIIB	234- 23
TIID	TIIF	
1S5100C	TIIB	234- 24
TIID	TIIF	
1S5110,A	TIIB	235-143
TIID	TIIF	
1S5110C	TIIB	235-144
TIID	TIIF	
1S5120,A	TIIB	237- 7
TIID	TIIF	
1S5120C	TIIB	237- 8
TIID	TIIF	
1S5130,A	TIIB	238- 34
TIID	TIIF	
1S5130C	TIIB	238- 35
TIID	TIIF	
1S5150,A	TIIB	240- 21
TIID	TIIF	
1S5150C	TIIB	240- 22
TIID	TIIF	
1S6006	TIIB	178-127
TIID	TIIF	
1S6006A	TIIB	178-128
TIID	TIIF	
1S6007	TIIB	180-171
TIID	TIIF	
1S6007A	TIIB	180-172
TIID	TIIF	
1S6008	TIIB	183- 39
TIID	TIIF	
1S6008A	TIIB	183- 40
TIID	TIIF	
1S6009	TIIB	186-151
TIID	TIIF	
1S6009A	TIIB	186-152
TIID	TIIF	
1S6010	TIIB	189- 58
TIID	TIIF	
1S6010A	TIIB	189- 59
TIID	TIIF	
1S6011	TIIB	191- 35
TIID	TIIF	
1S6011A	TIIB	191- 36
TIID	TIIF	
1S6012	TIIB	193-149
TIID	TIIF	
1S6012A	TIIB	193-150
TIID	TIIF	
1S6013	TIIB	195-168
TIID	TIIF	
1S6013A	TIIB	195-169
TIID	TIIF	
1S6015	TIIB	198-152
TIID	TIIF	
1S6015A	TIIB	198-153
TIID	TIIF	
1S6016	TIIB	200-109
TIID	TIIF	
1S6016A	TIIB	200-110
TIID	TIIF	
1S6018	TIIB	203- 44
TIID	TIIF	
1S6018A	TIIB	203- 45
TIID	TIIF	
1S6020	TIIB	205-177
TIID	TIIF	
1S6020A	TIIB	205-178
TIID	TIIF	
1S6022	TIIB	207-167
TIID	TIIF	
1S6022A	TIIB	207-168
TIID	TIIF	
1S6024	TIIB	209-137
TIID	TIIF	
1S6024A	TIIB	209-138
TIID	TIIF	
1S6027	TIIB	212- 37
TIID	TIIF	
1S6027A	TIIB	212- 38
TIID	TIIF	
1S6030	TIIB	214- 36
TIID	TIIF	
1S6030A	TIIB	214- 37
TIID	TIIF	
1S6033	TIIB	215-195
TIID	TIIF	
1S6033A	TIIB	215-196
TIID	TIIF	
1S6036	TIIB	217- 85
TIID	TIIF	
1S6036A	TIIB	217- 86
TIID	TIIF	

TYPE No.	MFRS	Pg&Line
1S6039	TIIB	218-157
TIID	TIIF	
1S6039A	TIIB	218-158
TIID	TIIF	
1S6043	TIIB	220- 46
TIID	TIIF	
1S6043A	TIIB	220- 47
TIID	TIIF	
1S6047	TIIB	221-180
TIID	TIIF	
1S6047A	TIIB	221-181
TIID	TIIF	
1S6051	TIIB	223-116
TIID	TIIF	
1S6051A	TIIB	223-117
TIID	TIIF	
1S6056	TIIB	225- 37
TIID	TIIF	
1S6056A	TIIB	225- 38
TIID	TIIF	
1S6062	TIIB	226-149
TIID	TIIF	
1S6062A	TIIB	226-150
TIID	TIIF	
1S6068	TIIB	228- 34
TIID	TIIF	
1S6068A	TIIB	228- 35
TIID	TIIF	
1S6075	TIIB	229-133
TIID	TIIF	
1S6075A	TIIB	229-134
TIID	TIIF	
1S6082	TIIB	231- 23
TIID	TIIF	
1S6082A	TIIB	231- 24
TIID	TIIF	
1S6091	TIIB	232-133
TIID	TIIF	
1S6091A	TIIB	232-134
TIID	TIIF	
1S6100	TIIB	234- 25
TIID	TIIF	
1S6100A	TIIB	234- 26
TIID	TIIF	
1S6110	TIIB	235-145
TIID	TIIF	
1S6110A	TIIB	235-146
TIID	TIIF	
1S6120	TIIB	237- 9
TIID	TIIF	
1S6120A	TIIB	237- 10
TIID	TIIF	
1S6130	TIIB	238- 36
TIID	TIIF	
1S6130A	TIIB	238- 37
TIID	TIIF	
1S6150	TIIB	240- 23
TIID	TIIF	
1S6150A	TIIB	240- 24
TIID	TIIF	
1S6160	TIIB	241- 28
TIID	TIIF	
1S6160A	TIIB	241- 29
TIID	TIIF	
1S6180	TIIB	242-146
TIID	TIIF	
1S6180A	TIIB	242-147
TIID	TIIF	
1S6200	TIIB	244- 8
TIID	TIIF	
1S6200A	TIIB	244- 9
TIID	TIIF	
1S7030A	TIIB	166-100
1S7033	TIIB	166-187
1S7033A	TIIB	166-188
1S7033B	TIIB	166-189
1S7036,B	TIIB	167-143
1S7036A	TIIB	167-144
1S7039,B	TIIB	168- 97
1S7039A	TIIB	168- 98
1S7043,B	TIIB	169- 97
1S7043A	TIIB	169- 98
1S7047,B	TIIB	170- 91
1S7047A	TIIB	170- 92
1S7051,B	TIIB	171-137
1S7051A	TIIB	171-138
1S7056,B	TIIB	172-177
1S7056A	TIIB	172-178
1S7062,B	TIIB	174-160
1S7062A	TIIB	174-161
1S7068,B	TIIB	177- 36
1S7068A	TIIB	177- 37
1S7075,B	TIIB	179- 89
1S7075A	TIIB	179- 90
1S7082,A,B	TIIB	181-145
1S7091,B	TIIB	185- 69
1S7091A	TIIB	185- 70
1S7100,B	TIIB	187-137
1S7100A	TIIB	187-138
1S7110,B	TIIB	189-173
1S7110A	TIIB	189-174
1S7120,B	TIIB	192- 17
1S7120A	TIIB	192- 18
1S7130,B	TIIB	194-101
1S7130A	TIIB	194-102
1S7150,B	TIIB	197- 48
1S7150A	TIIB	197- 49
1S7160A	TIIB	199- 52
1SB05	♦INRB	273- 10
1SB10	♦INRB	280- 9
1SB20	♦INRB	283- 61
1SB40	♦INRB	286- 4
1SB60	♦INRB	287- 65
1SB80	♦INRB	288- 7

TYPE No.	MFRS	Pg&Line
1SB100	♦INRB	288- 64
1SC301A	PHIL	598- 24
1SC301B	PHIL	598- 25
1SC301C	PHIL	598- 26
1SC301D	PHIL	598- 27
1SC301E	PHIL	598- 28
1T22	SONY	251- 4
1T22G	SONY	251- 5
1T23	SONY	247- 2
1T23G	SONY	247- 3
1T26	SONY	248- 60
1T501	ITT	299- 78
1T502	ITT	310- 43
1T503	ITT	320- 89
1T504	ITT	329- 3
1T505	ITT	339- 58
1T506	ITT	346- 54
1T507	ITT	355- 25
1T508	ITT	359- 68
1T509	ITT	366-110
1T510	ITT	370- 9
1T1101	SONY	569- 54
1T1102	SONY	569- 55
1T1103	SONY	569- 56
1T1104	SONY	571- 61
1T1110	SONY	569- 62
1T1401	SONY	581- 27
1T1402	SONY	581- 28
1WS1	CDWF	302- 15
1WS2	CDWF	313- 17
1WS4	CDWF	332- 4
1WS6	CDWF	349- 22
1WS8	CDWF	361- 94
1WS10	CDWF	372- 10
1Z3.3,A,B	♦BNT	167- 49
1Z3 3T10,5	♦INRI	167- 50
1Z3 6,A,B	♦BNT	168- 7
1Z3.6T10,5	♦INRI	168- 8
1Z3 9,A,B	♦BNT	168-157
1Z3 9T20,10,5	INRB	168-158
INRC	INRI	
	INRJ	
1Z4 3,A,B	♦BNT	169-156
1Z4 3T20,10,5	INRB	169-157
INRC	INRI	
	INRJ	
1Z4 7,A,B	♦BNT	170-161
1Z4 7T20,10,5	INRB	170-162
INRC	INRI	
	INRJ	
1Z5 1,A,B	♦BNT	172- 4
1Z5.1T20,10,5	INRB	172- 5
INRC	INRI	
	INRJ	
1Z5 6,A,B	♦BNT	173- 71
1Z5 6T20,10,5	INRB	173- 72
INRC	INRI	
	INRJ	
1Z6 2,A,B	♦BNT	175- 46
1Z6 2T20,10,5	INRB	175- 47
INRC	INRI	
	INRJ	
1Z6 8,A,B	♦BNT	177-166
1Z6 8T20,10,5	INRB	177-167
INRC	INRI	
	INRJ	
1Z7 5,A,B	♦BNT	180- 37
1Z7 5T20,10,5	INRB	180- 38
INRC	INRI	
	INRJ	
1Z8 2,A,B	♦BNT	182- 85
1Z8 2T20,10,5	INRB	182- 86
INRC	INRI	
	INRJ	
1Z9.1,A,B	♦BNT	186- 18
1Z9 1T20,10,5	INRB	186- 19
INRC	INRI	
	INRJ	
1Z10,A,B	♦BNT	188- 94
1Z10T20,10,5	INRB	188- 95
INRC	INRI	
	INRJ	
1Z11,A,B	♦BNT	190- 89
1Z11T20,10,5	INRB	190- 90
INRC	INRI	
	INRJ	
1Z12,A,B	♦BNT	192-163
1Z12T20,10,5	INRB	192-164
INRC	INRI	
	INRJ	
1Z13,A,B	♦BNT	195- 27
1Z13T20,10,5	INRB	195- 28
INRC	INRI	
	INRJ	
1Z15,A,B	♦BNT	197-179
1Z15T20,10,5	INRB	197-180
INRC	INRI	
	INRJ	
1Z16,A,B	♦BNT	199-165
1Z16T20,10,5	INRB	199-166
INRC	INRI	
	INRJ	
1Z18,A,B	♦BNT	202- 88
1Z18T20,10,5	INRB	202- 89
INRC	INRI	
	INRJ	
1Z20,A,B	♦BNT	205- 36
1Z20T20,10,5	INRB	205- 37
INRC	INRI	
	INRJ	
1Z22,A,B	♦BNT	207- 15
1Z22T20,10,5	INRB	207- 16
INRC	INRI	
	INRJ	

△-Registered with JEDEC by this manufacturer

♦-Copy of mfr's data sheet may be ordered from D.A.T.A.

1. TYPE No. CROSS INDEX

IN TYPE NUMBER SEQUENCE

TYPE No.	MFRS	Pg&Line
1Z24,A,B	♦BNT	208-185
1Z24T20,10,5	INRB	209- 1
INRC	INRI	
	INRJ	
1Z27,A,B	♦BNT	211- 78
1Z27T20,10,5	INRB	211- 79
INRC	INRI	
	INRJ	
1Z30,A,B	♦BNT	213- 80
1Z30T20,10,5	INRB	213- 81
INRC	INRI	
	INRJ	
1Z33,A,B	♦BNT	215- 47
1Z33T10,5	INRI	215- 48
1Z36,A,B	♦BNT	216-158
1Z39,A,B	♦BNT	218- 56
1Z43,A,B	♦BNT	219-132
1Z47,A,B	♦BNT	221- 72
1Z51,A,B	♦BNT	223- 22
1Z56,A,B	♦BNT	224-100
1Z62,A,B	♦BNT	226- 53
1Z68,A,B	♦BNT	227-109
1Z75,A,B	♦BNT	229- 25
1Z82,A,B	♦BNT	230-105
1Z91,A,B	♦BNT	232- 43
1Z100,A,B	♦BNT	233- 84
1ZC3 3T10,5	INRI	167- 51
1ZC3 6T10,5	INRB	168- 9
	INRI	
1ZC3 9T10,5	INRB	168-159
	INRI	
1ZC4 3T10,5	INRB	169-158
	INRI	
1ZC4 7T10,5	INRB	170-163
	INRI	
1ZC5 1T10,5	INRB	172- 6
	INRI	
1ZC5 6T10,5	INRB	173- 73
	INRI	
1ZC6 2T10,5	INRB	175- 48
	INRI	
1ZC6 8T10,5	INRB	177-168
	INRI	
1ZC7 5T10,5	INRB	180- 39
	INRI	
1ZC8 2T10,5	INRB	182- 87
	INRI	
1ZC9 1T10,5	INRB	186- 20
	INRI	
1ZC10T10,5	INRB	188- 96
	INRI	
1ZC11T10,5	INRB	190- 91
	INRI	
1ZC12T10,5	INRB	192-165
	INRI	
1ZC13T10,5	INRB	195- 29
	INRI	
1ZC15T10,5	INRB	197-181
	INRI	
1ZC16T10,5	INRB	199-167
	INRI	
1ZC18T10,5	INRB	202- 90
	INRI	
1ZC20T10,5	INRB	205- 38
	INRI	
1ZC22T10,5	INRB	207- 17
	INRI	
1ZC24T10,5	INRB	209- 2
	INRI	
1ZC27T10,5	INRB	211- 80
	INRI	
1ZC30T10,5	INRB	213- 82
	INRI	
1 25AGD	SCN	165- 74
1 5DKZ6 8,A,B	TEK	178- 49
1 5DKZ7 5,A,B	TEK	180- 90
1 5DKZ8 2,A,B	TEK	182-143
1 5DKZ9 1,A,B	TEK	186- 72
1 5DKZ10,A,B	TEK	188-159
1 5DKZ11,A,B	TEK	190-143
1 5DKZ12,A,B	TEK	193- 52
1 5DKZ13,A,B	TEK	193- 53
1 5DKZ15,A,B	TEK	195- 82
1 5DKZ16,A,B	TEK	198- 55
1 5DKZ18,A,B	TEK	200- 31
1 5DKZ20,A,B	TEK	205- 86
1 5DKZ22,A,B	TEK	207- 71
1 5DKZ24,A,B	TEK	209- 49
1 5DKZ27,A,B	TEK	211-137
1 5DKZ30,A,B	TEK	213-132
1 5DKZ33,A,B	TEK	215-101
1 5DKZ36,A,B	TEK	217- 8
1 5DKZ39,A,B	TEK	218- 90
1 5DKZ43,A,B	TEK	219-166
1 5DKZ47,A,B	TEK	221-110
1 5DKZ51,A,B	TEK	223- 53
1 5DKZ56,A,B	TEK	224-140
1 5DKZ62,A,B	TEK	226- 84
1 5DKZ68,A,B	TEK	227-145
1 5DKZ75,A,B	TEK	229- 58
1 5E1	PWC	301-103
1 5E2	PWC	312-103
1 5E3	PWC	322- 59
1 5E4	PWC	331- 89
1 5E05	PWC	294- 94
1 5E5	PWC	341- 27
1 5E6	PWC	349- 3
1 5E7	PWC	356- 9
1 5E8	PWC	361- 79
1 5E10	PWC	371-108
1 5E12	PWC	378- 77
1 5E18	PWC	388- 33
1 5J1	PWC	301-104
1 5J2	PWC	312-104

TYPE No.	MFRS	Pg&Line
1.5J3	PWC	322- 60
1 5J4	PWC	331- 90
1 5J05	PWC	294- 95
1.5J5	PWC	341- 28
1.5J6	PWC	349- 4
1.5J7	PWC	356- 10
1 5J8	PWC	361- 80
1 5J10	PWC	371-109
1 5J12	PWC	378- 78
1 5JZ6 8,A,B,D		178- 50
	PWC	
1 5JZ6 8C	PWC	178- 51
1 5JZ7 5,A,B,D		180- 91
	PWC	
1 5JZ7 5C	PWC	180- 92
1 5JZ8 2,A,B,D		182-144
	PWC	
1 5JZ8 2C	PWC	182-145
1 5JZ9 1,A,B,D		186- 73
	PWC	
1 5JZ9 1C	PWC	186- 74
1 5JZ10,A,B,D	PWC	188-160
1 5JZ10C	PWC	188-161
1 5JZ11,A,B,D	PWC	190-144
1 5JZ11C	PWC	190-145
1 5JZ12,A,B,D	PWC	193- 54
1 5JZ12C	PWC	193- 55
1 5JZ13,A,B,D	PWC	195- 83
1 5JZ13C	PWC	195- 84
1 5JZ14,A,B,D	PWC	196-100
1 5JZ14C	PWC	196-101
1 5JZ15,A,B,D	PWC	198- 56
1 5JZ15C	PWC	198- 57
1 5JZ16,A,B,D	PWC	200- 32
1 5JZ16C	PWC	200- 33
1 5JZ17,A,B,D	PWC	201- 43
1 5JZ17C	PWC	201- 44
1 5JZ18,A,B,D	PWC	202-147
1 5JZ18C	PWC	202-148
1 5JZ19,A,B,D	PWC	204- 1
1 5JZ19C	PWC	204- 2
1 5JZ20,A,B,D	PWC	205- 87
1 5JZ20C	PWC	205- 88
1 5JZ22,A,B,D	PWC	207- 72
1 5JZ22C	PWC	207- 73
1 5JZ24,A,B,D	PWC	209- 50
1.5JZ24C	PWC	209- 51
1 5JZ25,A,B,D	PWC	210- 50
1.5JZ25C	PWC	210- 51
1.5JZ27,A,B,D	PWC	211-138
1.5JZ27C	PWC	211-139
1.5JZ30,A,B,D	PWC	213-133
1 5JZ30C	PWC	213-134
1 5JZ33,A,B,D	PWC	215-102
1 5JZ33C	PWC	215-103
1 5JZ36,A,B,D	PWC	217- 9
1 5JZ36C	PWC	217- 10
1 5JZ39,A,B,D	PWC	216- 40
1 5JZ39C	PWC	218- 91
1 5JZ43,A,B,D	PWC	219-167
1 5JZ43C	PWC	219-168
1.5JZ45,A,B,D	PWC	220-103
1 5JZ45C	PWC	220-104
1 5JZ47	PWC	221-111
1 5JZ47,A,B,D	PWC	221-112
1 5JZ47C	PWC	221-113
1 5JZ50,A,B,D	PWC	222- 73
1 5JZ50C	PWC	222- 74
1 5JZ51,A,B,D	PWC	223- 54
1 5JZ51C	PWC	223- 55
1 5JZ52,A,B,D	PWC	223-166
1 5JZ52C	PWC	223-167
1 5JZ56,A,B,D	PWC	224-141
1 5JZ56C	PWC	224-142
1 5JZ62,A,B,D	PWC	226- 85
1.5JZ62C	PWC	226- 86
1.5JZ68,A,B,D	PWC	227-146
1 5JZ68C	PWC	227-147
1 5JZ75,A,B,D	PWC	229- 59
1 5JZ75C	PWC	229- 60
1 5JZ82,A,B,D	PWC	230-139
1 5JZ82C	PWC	230-140
1 5JZ91,A,B,D	PWC	232- 72
1 5JZ91C	PWC	232- 73
1 5JZ100,A,B,D		233-121
	PWC	
1 5JZ100C	PWC	233-122
1 5JZ105,A,B,D		234-111
	PWC	
1 5JZ105C	PWC	234-112
1.5JZ110,A,B,D		235- 82
	PWC	
1 5JZ110C	PWC	235- 83
1.5JZ120,A,B,D		236-109
	PWC	
1 5JZ120C	PWC	236-110
1 5JZ130,A,B,D		237-143
	PWC	
1 5JZ130C	PWC	237-144
1 5JZ140,A,B,D		238-120
	PWC	
1 5JZ140C	PWC	238-121
1 5JZ150,A,B,D		239-125
	PWC	
1 5JZ150C	PWC	239-126
1.5JZ160,A,B,D		240-143
	PWC	
1 5JZ160C	PWC	240-144
1 5JZ175,A,B,D		241-129
	PWC	
1 5JZ175C	PWC	241-130
1.5JZ180,A,B,D		242- 88
	PWC	
1 5JZ180C	PWC	242- 89

TYPE No.	MFRS	Pg&Line
1.5JZ200,A,B,D		243-124
	PWC	
1 5JZ200C	PWC	243-125
1 5JZ220,A,B,D		244- 47
	PWC	
1.5JZ220C	PWC	244- 48
1 5M14Z,10,5	MOTA	196-102
1 5M17Z,10,5	MOTA	201- 45
1 5M19Z,10,5	MOTA	204- 3
1 5M25Z,10,5	MOTA	210- 52
1 5M140Z,10,5	MOTA	238-122
1 5R8.2,A,B	SOD	182-146
1 5R9 1,A,B	SOD	186- 75
1 5R10,A,B	SOD	188-162
1 5R11,A,B	SOD	190-146
1 5R12,A,B	SOD	193- 56
1 5R13,A,B	SOD	195- 85
1 5R15,A,B	SOD	198- 58
1.5R16,A,B	SOD	200- 34
1 5R18,A,B	SOD	202-149
1 5R20,A,B	SOD	205- 89
1 5R22,A,B	SOD	207- 74
1 5R24,A,B	SOD	209- 52
1 5R27,A,B	SOD	211-140
1.5R30,A,B	SOD	213-135
1 5R33,A,B	SOD	215-104
1 5R36,A,B	SOD	217- 11
1 5R39,A,B	SOD	218- 92
1 5R43,A,B	SOD	219-169
1 5R47,A,B	SOD	221-114
1.5R51,A,B	SOD	223- 56
1 5R56,A,B	SOD	224-143
1 5R62,A,B	SOD	226- 87
1 5R68,A,B	SOD	227-148
1.5R75,A,B	SOD	229- 61
1 5R82,A,B	SOD	230-141
1.5R91,A,B	SOD	232- 74
1 5R100,A,B	SOD	233-123
1.5R110,A,B	SOD	235- 84
1 5R120,A,B	SOD	236-111
1 5R130,A,B	SOD	237-145
1 5R140,A,B	SOD	238-123
1.5R150,A,B	SOD	239-127
1 5R160,A,B	SOD	240-145
1 5R175,A,B	SOD	241-131
1 5R180,A,B	SOD	242- 90
1 5R200,A,B	SOD	243-126
1 5Z6 8,A,B,D	PWC	178- 52
1.5Z6.8C	PWC	178- 53
1 5Z7 5,A,B,D	PWC	180- 93
1.5Z7.5C	PWC	180- 94
1 5Z8.2,A,B,D	PWC	182-147
1.5Z8.2C	PWC	182-148
1.5Z9 1,A,B,D	PWC	186- 76
1 5Z9 1C	PWC	186- 77
1 5Z10,A,B,D	PWC	188-163
1 5Z10C	PWC	188-164
1 5Z11,A,B,D	PWC	190-147
1.5Z11C	PWC	190-148
1 5Z12,A,B,D	PWC	193- 57
1 5Z12C	PWC	193- 58
1 5Z13,A,B,D	PWC	195- 86
1 5Z13C	PWC	195- 87
1 5Z14,A,B,D	PWC	196-103
1 5Z14C	PWC	196-104
1.5Z15,A,B,D	PWC	198- 59
1 5Z15C	PWC	198- 60
1 5Z16,A,B,D	PWC	200- 35
1 5Z16C	PWC	200- 36
1 5Z17,A,B,D	PWC	201- 46
1 5Z17C	PWC	201- 47
1 5Z18,A,B,D	PWC	202-150
1 5Z18C	PWC	202-151
1 5Z19,A,B,D	PWC	204- 4
1 5Z19C	PWC	204- 5
1 5Z20,A,B,D	PWC	205- 90
1 5Z20C	PWC	205- 91
1.5Z22,A,B,D	PWC	207- 75
1 5Z22C	PWC	207- 76
1 5Z24,A,B,D	PWC	209- 53
1 5Z24C	PWC	209- 54
1.5Z25,A,B,D	PWC	210- 53
1 5Z25C	PWC	210- 54
1.5Z27,A,B,D	PWC	211-141
1 5Z27C	PWC	211-142
1 5Z30,A,B,D	PWC	213-136
1 5Z30C	PWC	213-137
1 5Z33,A,B,D	PWC	215-105
1 5Z33C	PWC	215-106
1 5Z36,A,B,D	PWC	217- 12
1.5Z36C	PWC	217- 13
1 5Z39,A,B,D	PWC	218- 93
1 5Z39C	PWC	218- 94
1 5Z43,A,B,D	PWC	219-170
1 5Z43C	PWC	219-171
1.5Z45,A,B,D	PWC	220-105
1.5Z45C	PWC	220-106
1 5Z47,A,B,D	PWC	221-115
1 5Z47C	PWC	221-116
1 5Z50,A,B,D	PWC	222- 75
1 5Z50C	PWC	222- 76
1 5Z51,A,B,D	PWC	223- 57
1 5Z51C	PWC	223- 58
1 5Z52,A,B,D	PWC	223-168
1 5Z52C	PWC	223-169
1 5Z56,A,B,D	PWC	224-144
1 5Z56C	PWC	224-145
1 5Z62,A,B,D	PWC	226- 88
1 5Z62C	PWC	226- 89
1 5Z68,A,B,D	PWC	227-149
1 5Z68C	PWC	227-150
1 5Z75,A,B,D	PWC	229- 62
1 5Z75C	PWC	229- 63
1 5Z82,A,B,D	PWC	230-142

TYPE No.	MFRS	Pg&Line
1.5Z82C	PWC	230-143
1.5Z91,A,B,D	PWC	232- 75
1.5Z91C	PWC	232- 76
1.5Z100,A,B,D	PWC	233-124
1.5Z100C	PWC	233-125
1.5Z105,A,B,D	PWC	234-113
1.5Z105C	PWC	234-114
1.5Z110,A,B,D	PWC	235- 85
1.5Z110C	PWC	235- 86
1.5Z120,A,B,D	PWC	236-112
1 5Z120C	PWC	236-113
1.5Z130,A,B,D	PWC	237-146
1.5Z130C	PWC	237-147
1 5Z140,A,B,D	PWC	238-124
1.5Z140C	PWC	238-125
1.5Z150,A,B,D	PWC	239-128
1 5Z150C	PWC	239-129
1.5Z160,A,B,D	PWC	240-146
1 5Z160C	PWC	240-147
1 5Z175,A,B,D	PWC	241-132
1.5Z175C	PWC	241-133
1.5Z180,A,B,D	PWC	242- 91
1 5Z180C	PWC	242- 92
1.5Z200,A,B,D	PWC	243-127
1 5Z200C	PWC	243-128
1 5Z220,A,B,D	PWC	244- 49
1 5Z220C	PWC	244- 50
02Z5 6A	TOSJ	172-113
02Z6 2A	TOSJ	174- 77
02Z6 8A	TOSJ	176-203
02Z7 5A	TOSJ	179- 47
02Z8 2A	TOSJ	181-102
02Z9 1A	TOSJ	185- 28
02Z10A	TOSJ	187- 95
02Z11A	TOSJ	189-141
02Z12A	TOSJ	191-177
02Z13A	TOSJ	194- 74
02Z15A	TOSJ	197- 15
02Z16A	TOSJ	199- 25
02Z18A	TOSJ	201-100
2A18	HAFO	170- 21
2A21	HAFO	172- 63
2A22	HAFO	171- 73
2A25	HAFO	167-145
2A28	HAFO	166-101
2A30	SOD	292- 58
2A43	HAFO	166- 68
2A44	HAFO	166-190
2A47	HAFO	169- 47
2A1200	SOD	378- 89
2A	♦CRL	579- 95
2AA119	MINA	249- 58
♦PHIC	♦RADF	
2AF1	♦INRI	304- 26
2AF1LH	♦INRI	304- 32
2AF1LV	♦INRI	304- 27
2AF1PLH	INRI	304- 33
2AF1PLV	INRI	304- 34
2AF1PPF	INRI	304- 35
2AF1PPP	INRI	304- 36
2AF2	♦INRI	315- 52
2AF2LH	♦INRI	315- 60
2AF2LV	♦INRI	315- 53
2AF2PLH	INRI	315- 61
2AF2PLV	INRI	315- 62
2AF2PPF	INRI	315- 63
2AF2PPP	INRI	315- 64
2AF4	♦INRI	334- 52
2AF4LH	♦INRI	334- 61
2AF4LV	♦INRI	334- 53
2AF4PLH	INRI	334- 62
2AF4PLV	INRI	334- 63
2AF4PPF	INRI	334- 64
2AF4PPP	INRI	334- 65
2AF05	♦INRI	296- 51
2AF05LH	♦INRI	296- 56
2AF05LV	♦INRI	296- 52
2AF05PLH	INRI	296- 57
2AF05PLV	INRI	296- 58
2AF05PPF	INRI	296- 59
2AF05PPP	INRI	296- 60
2ASLD1	SOD	386- 38
2ASLD2	SOD	390- 38
2ASLD3	SOD	394- 73
2ASLD4	SOD	397- 52
2ASLD5	SOD	400- 8
2ASLD6	SOD	401- 63
2ASLD7	SOD	402- 67
2ASLD8	SOD	404- 13
2ASLD9	SOD	404- 99
2ASLD10	SOD	406- 53
2ASLD10TRA	SOD	406- 51
2ASLD10TRB	SOD	406- 52
2ASLD15	SOD	408- 78
2ASLD15TR	SOD	408- 79
2ASLD20	SOD	410- 44
2ASLD25	SOD	411- 51
2ASLD30	SOD	412- 48
2ASLD35	SOD	412- 61
2ASLD40	SOD	412- 91
2ASLD40TR	SOD	412- 92
2ASLD45	SOD	412-110
2ASLD50	SOD	413- 14
2ASLD75	SOD	413- 21
2ASLD100	SOD	413- 28
2ASLD120	SOD	413- 33
2EM015	PWC	292- 24
2F1	PWC	302- 60
2F2	PWC	313- 66
2F3	PWC	323- 3
2F4△	PWC	332- 52
2F05	PWC	295- 33
2F6	PWC	349- 72
2F8	PWC	362- 22

TYPE No.	MFRS	Pg&Line
2F10	PWC	372- 46
2F12	PWC	378- 94
2G8	AEIL	311- 7
2L15	EDL	383- 98
2L20	EDL	389- 27
2L25	EDL	392- 13
2L30	EDL	393- 66
2L35	EDL	395- 49
2L40	EDL	396- 48
2L45	EDL	398- 3
2L50	EDL	398-104
2L55	EDL	400- 35
2L60	EDL	400- 68
2L65	EDL	401- 80
2L70	EDL	402- 8
2L75	EDL	402- 89
2L80	EDL	403- 30
2L85	EDL	404- 24
2L90	EDL	404- 49
2L95	EDL	404-103
2L100	EDL	405- 36
2L110	EDL	406- 65
2L120	EDL	406-104
2L130	EDL	407- 58
2L140	EDL	407- 81
2L150	EDL	408- 16
2L159	EDL	383- 99
2L160	EDL	408- 96
2L170	EDL	409- 25
2L180	EDL	409- 42
2L190	EDL	409- 69
2L200	EDL	409-101
2L209	EDL	389- 28
2L210	EDL	410- 50
2L220	EDL	410- 64
2L230	EDL	410- 80
2L240	EDL	410- 93
2L250	EDL	411- 9
2L259	EDL	392- 14
2L260	EDL	411- 56
2L270	EDL	411- 70
2L280	EDL	411- 82
2L290	EDL	411- 96
2L300	EDL	412- 10
2L309	EDL	393- 67
2L359	EDL	395- 50
2L409	EDL	396- 49
2L459	EDL	398- 4
2L509	EDL	398-105
2L559	EDL	400- 36
2L609	EDL	400- 69
2L659	EDL	401- 81
2L709	EDL	402- 9
2L759	EDL	402- 90
2L809	EDL	403- 31
2L859	EDL	404- 25
2L909	EDL	404- 50
2L959	EDL	404-104
2L1009	EDL	405- 37
2N681	△GESY	415- 37
♦ESMF	INRB	
INRC	INRI	
INRJ	MISI	
♦MOTA	♦NAT	
♦RCA	SCN	
♦SEN	SES	
SOIF	SST	
SYN	TEC	
TEK	TNC	
	WESY	
2N681A	SCN	415- 54
	TEK	
2N682	△GESY	419-107
♦ESMF	INRB	
INRC	INRI	
INRJ	MISI	
♦MOTA	♦NAT	
♦RCA	SCN	
♦SEN	SES	
SOIF	SST	
SYN	TEC	
TEK	TNC	
	WESY	
JAN2N682	GESY	419-108
INRC	TRW	
2N682A	SCN	420- 17
	TEK	
2N683	△GESY	426- 90
♦ESMF	INRB	
INRC	INRI	
INRJ	MISI	
♦MOTA	♦NAT	
PHIC	♦RCA	
SCN	♦SEN	
SES	SOIF	
SST	SYN	
♦TAGS	TEC	
TEK	TNC	
	WESY	
JAN2N683	GESY	426- 91
INRC	TRW	
2N683A	SCN	427- 5
♦TAGS	TEK	
2N683AS	♦TAGS	427- 52
2N683S	♦TAGS	427- 53
2N684	△GESY	430-100
♦ESMF	INRB	
INRC	INRI	
INRJ	MISI	
♦MOTA	♦NAT	
♦RCA	SCN	
♦SEN	SES	
SST	SYN	

cont next page

△-Registered with JEDEC by this manufacturer

♦-Copy of mfr's data sheet may be ordered from D.A.T.A.

1. TYPE No. CROSS INDEX

IN TYPE NUMBER SEQUENCE

TYPE No	MFRS	Pg&Line
2N684		
(cont)	TEC	
TEK	TNC	
	WESY	
2N684A	SCN	430-107
	TEK	
2N685	△GESY	436- 17
♦ESMF	INRB	
INRC	INRI	
INRJ	MISI	
♦MOTA	♦NAT	
PHIC	♦RCA	
SCN	♦SEN	
SES	SOIF	
SST	SYN	
♦TAGS	TEC	
TEK	TNC	
	WESY	
JAN2N685	GESY	436- 18
INRC	TRW	
2N685A	SCN	436- 44
♦TAGS	TEK	
2N685AS	♦TAGS	436- 92
2N685S	♦TAGS	436- 93
2N686	△GESY	441- 9
♦ESMF	INRB	
INRC	INRI	
INRJ	MISI	
♦MOTA	♦NAT	
♦RCA	SCN	
♦SEN	SES	
SST	SYN	
TEC	TEK	
TNC	WESY	
JAN2N686	GESY	441- 10
INRC	TRW	
2N686A	SCN	441- 18
	TEK	
2N687	△GESY	444- 49
♦ESMF	INRB	
INRC	INRI	
INRJ	MISI	
♦MOTA	♦NAT	
PHIC	♦RCA	
SCN	♦SEN	
SES	SOIF	
SST	SYN	
♦TAGS	TEC	
TEK	TNC	
	WESY	
JAN2N687	GESY	444- 50
INRC	TRW	
2N687A	SCN	444- 74
♦TAGS	TEK	
2N687AS	♦TAGS	444-107
2N687S	♦TAGS	444-108
2N688	△GESY	452- 10
♦ESMF	INRB	
INRC	INRI	
INRJ	MISI	
♦MOTA	♦NAT	
PHIC	♦RCA	
SCN	♦SEN	
SES	SOIF	
SSI	SST	
SYN	♦TAGS	
TEC	TEK	
TNC	WESY	
JAN2N688	GESY	452- 11
INRC	TRW	
2N688A	SCN	452- 36
♦TAGS	TEK	
2N688AS	♦TAGS	452- 88
2N688S	♦TAGS	452- 89
2N689	△GESY	458- 93
♦ESMF	INRB	
INRC	INRI	
INRJ	MISI	
♦MOTA	♦NAT	
PHIC	♦RCA	
SCN	♦SEN	
SES	SOIF	
SSI	SST	
SYN	♦TAGS	
TEC	TEK	
TNC	WESY	
JAN2N689	GESY	458- 94
INRC	TRW	
2N689A	SCN	459- 5
♦TAGS	TEK	
2N689AS	♦TAGS	459- 49
2N689S	♦TAGS	459- 50
2N690	△GESY	465- 24
♦ESMF	INRB	
INRC	INRI	
INRJ	MISI	
♦NAT	PHIC	
♦RCA	SCN	
♦SEN	SES	
SOIF	SSI	
SYN	♦TAGS	
TEK	TNC	
	WESY	
JAN2N690	INRC	465- 25
2N690A	△GESY	465-106
♦TAGS	TEK	
2N690AS	♦TAGS	465-100
2N690S	♦TAGS	465-101
2N691	△GESY	471- 14
♦ESMF	INRB	
INRC	INRI	
INRJ	MISI	
♦NAT	PHIC	

cont next col.

TYPE No.	MFRS	Pg&Line
2N691		
(cont)	SCN	
♦SEN	SES	
SOIF	SSI	
SYN	♦TAGS	
TEK	WESY	
JAN2N691	INRC	471- 15
2N691A	♦TAGS	471- 39
2N691AS	♦TAGS	471- 40
2N691S	♦TAGS	471- 41
2N692	△GESY	475- 10
♦ESMF	INRB	
INRC	INRI	
INRJ	MISI	
♦NAT	PHIC	
SCN	♦SEN	
SES	SOIF	
SSI	SYN	
♦TAGS	TEK	
	WESY	
JAN2N692	INRC	475- 11
2N692A	♦TAGS	475- 61
2N692AS	♦TAGS	475- 62
2N692S	♦TAGS	475- 63
2N764	TEC	497- 26
2N765	TEC	497- 41
2N766	TEC	497- 57
2N767	TEC	497- 84
2N876	△UNI	414- 27
♦FSC	SES	
SSI	TEC	
2N877	△UNI	416- 52
ESMF	♦FSC	
♦GESY	MISI	
SES	SSI	
	TEC	
2N878	△UNI	421- 97
ESMF	♦FSC	
♦GESY	MISI	
SES	SSI	
	TEC	
2N879	△UNI	423- 41
ESMF	♦FSC	
♦GESY	MISI	
SES	SSI	
	TEC	
2N880	△UNI	430- 24
ESMF	♦FSC	
♦GESY	MISI	
SES	SSI	
	TEC	
2N881	△UNI	432- 44
ESMF	♦FSC	
♦GESY	MISI	
SES	SSI	
	TEC	
2N882	♦FSC	442- 31
SSI	UNI	
2N883	△UNI	448- 85
♦FSC	SSI	
2N884	△UNI	414- 28
♦FSC	SES	
SSI	TEC	
2N884A	TEC	414- 25
2N885	△UNI	416- 53
♦FSC	♦GESY	
SES	SSI	
SST	TEC	
2N885A	TEC	416- 43
2N886	△UNI	421- 98
♦FSC	♦GESY	
SES	SSI	
	TEC	
2N886A	TEC	421- 87
2N887	△UNI	423- 42
♦FSC	♦GESY	
SES	SSI	
SST	TEC	
2N887A	TEC	423- 28
2N888	△UNI	430- 25
♦FSC	♦GESY	
SES	SSI	
	TEC	
2N888A	TEC	430- 22
2N889	△UNI	432- 45
♦FSC	♦GESY	
SES	SSI	
	TEC	
2N889A	TEC	432- 32
2N890	♦FSC	442- 32
SSI	UNI	
2N891	♦FSC	448- 86
SSI	UNI	
2N892	△UNI	497- 12
♦FSC	SSI	
	TEC	
2N893	SSI	497- 13
TEC	UNI	
2N894	△UNI	497- 18
♦FSC	SSI	
	TEC	
2N895	△UNI	497- 19
SSI	TEC	
2N896	△UNI	497- 33
♦FSC	SSI	
	TEC	
2N897	△UNI	497- 34
SSI	TEC	
2N898	△UNI	497- 49
♦FSC	SSI	
	TEC	
2N899	△UNI	497- 50
SSI	TEC	

TYPE No.	MFRS	Pg&Line
2N900	△UNI	497- 76
♦FSC	SSI	
	TEC	
2N901	△UNI	497- 77
SSI	TEC	
2N948	♦FSC	416- 42
SSI	TEC	
	UNI	
2N949	♦FSC	421- 86
SSI	TEC	
	UNI	
2N950	♦FSC	423- 27
SSI	TEC	
	UNI	
2N951	♦FSC	432- 31
SSI	TEC	
	UNI	
2N1595	♦△TII	418- 9
♦ESMF	ETC	
♦FSC	GESY	
MISI	♦MOTA	
SCN	SES	
SOIF	SSI	
SST	TAGS	
TEC	TEK	
TIIB	TIID	
TIIF	TNC	
	UNI	
2N1595A	SES	418- 37
TEC	TEK	
2N1596	♦△TII	423- 97
♦ESMF	ETC	
♦FSC	GESY	
MISI	♦MOTA	
SCN	SES	
SOIF	SSI	
SST	TAGS	
TEC	TEK	
TIIB	TIID	
TIIF	TNC	
	UNI	
2N1596A	SES	424- 41
TEC	TEK	
2N1597	♦△TII	432- 90
♦ESMF	ETC	
♦FSC	GESY	
MISI	♦MOTA	
SCN	SES	
SOIF	SSI	
SST	TAGS	
TEC	TEK	
TIIB	TIID	
TIIF	TNC	
	UNI	
2N1597A	SES	433- 42
TEC	TEK	
2N1598	♦△TII	442- 57
♦ESMF	♦FSC	
GESY	MISI	
♦MOTA	SCN	
SES	SOIF	
SSI	SST	
TAGS	TEC	
TEK	TIIB	
TIID	TIIF	
TNC	UNI	
2N1598A	SES	442- 89
TEC	TEK	
2N1599	♦△TII	449- 2
♦ESMF	♦FSC	
GESY	MISI	
♦MOTA	SCN	
SOIF	SSI	
SST	TAGS	
TEC	TEK	
TIIB	TIID	
TIIF	TNC	
	UNI	
2N1599A	TEC	449- 48
2N1600	INRB	418- 76
INRC	INRI	
INRJ	SCN	
SES	SSI	
TEC	TNC	
2N1601	INRB	424- 87
INRC	INRI	
INRJ	SCN	
SES	SSI	
TEC	TNC	
2N1602	INRB	433- 98
INRC	INRI	
INRJ	SCN	
SES	SSI	
TEC	TNC	
2N1603	INRB	443- 9
INRC	INRI	
INRJ	SCN	
SES	SSI	
TEC	TNC	
2N1604	INRB	449- 99
INRC	INRI	
INRJ	SCN	
SES	SSI	
TEC	TNC	
2N1686	△TEC	497- 31
2N1687	△TEC	497- 47
2N1688	△TEC	497- 63
2N1689	△TEC	497- 89
2N1770	♦△GESY	414-104
♦ESMF	INRB	
INRC	INRI	
INRJ	MISI	
SCN	SES	

cont next col

TYPE No.	MFRS	Pg&Line
2N1770	SOIF	
(cont)	TEC	
SST	TNC	
2N1770A	♦△GESY	414-106
♦ESMF	INRB	
INRC	INRI	
INRJ	MISI	
SCN	TEC	
	TNC	
2N1771	♦△GESY	418- 84
♦ESMF	INRB	
INRC	INRI	
INRJ	MISI	
SCN	SES	
SOIF	SST	
TEC	TNC	
2N1771A	♦△GESY	418- 86
♦ESMF	INRB	
INRC	INRI	
INRJ	MISI	
SCN	TEC	
	TNC	
JAN2N1771A	GESY	419- 42
	TEC	
2N1772	♦△GESY	424- 98
♦ESMF	INRB	
INRC	INRI	
INRJ	MISI	
SCN	SES	
SOIF	SST	
TAGS	TEC	
	TNC	
2N1772A	♦△GESY	424-101
♦ESMF	INRB	
INRC	INRI	
INRJ	MISI	
SCN	TEC	
	TNC	
JAN2N1772A	GESY	425- 73
	TEC	
2N1773	♦△GESY	430- 75
♦ESMF	INRB	
INRC	INRI	
INRJ	MISI	
PHIC	SCN	
SES	SOIF	
SST	TEC	
	TNC	
2N1773A	♦△GESY	430- 78
♦ESMF	INRB	
INRC	INRI	
INRJ	MISI	
SCN	TEC	
	TNC	
2N1774	♦△GESY	434- 2
♦ESMF	INRB	
INRC	INRI	
INRJ	MISI	
PHIC	SCN	
SES	SOIF	
SST	TAGS	
TEC	TNC	
2N1774A	♦△GESY	434- 5
♦ESMF	INRB	
INRC	INRI	
INRJ	MISI	
SCN	TEC	
	TNC	
JAN2N1774A	GESY	434- 96
	TEC	
2N1775	♦△GESY	440- 99
♦ESMF	INRB	
INRC	INRI	
INRJ	MISI	
PHIC	SCN	
SES	SOIF	
SST	TEC	
	TNC	
2N1775A	♦△GESY	440-101
♦ESMF	INRB	
INRC	INRI	
INRJ	MISI	
SCN	TEC	
	TNC	
2N1776	♦△GESY	443- 18
♦ESMF	INRB	
INRC	INRI	
INRJ	MISI	
PHIC	SCN	
SES	SOIF	
SST	TAGS	
TEC	TNC	
2N1776A	♦△GESY	443- 20
♦ESMF	INRB	
INRC	INRI	
INRJ	MISI	
SCN	TEC	
	TNC	
JAN2N1776A	GESY	443- 71
	TEC	
2N1777	♦△GESY	449-110
♦ESMF	INRB	
INRC	INRI	
INRJ	MISI	
PHIC	SCN	
SES	SOIF	
SST	TAGS	
TEC	TNC	
2N1777A	♦△GESY	450- 4
♦ESMF	INRB	
INRC	INRI	
INRJ	MISI	

cont.next col

TYPE No.	MFRS	Pg&Line
2N1777A		
(cont)	SCN	
TEC	TNC	
JAN2N1777A	GESY	450- 92
	TEC	
2N1778	♦△GESY	457- 55
♦ESMF	INRB	
INRC	INRI	
INRJ	MISI	
PHIC	SCN	
SES	SOIF	
SST	TAGS	
	TNC	
2N1792	△WESY	422- 63
GESY	INRB	
INRC	INRI	
INRJ	♦NAT	
SES	TNC	
JAN2N1792	GESY	420-105
	INRC	
2N1793	△WESY	429- 97
GESY	INRB	
INRC	INRI	
INRJ	♦NAT	
SES	SYN	
	TNC	
JAN2N1793	GESY	428- 59
	INRC	
2N1794	△WESY	431-101
GESY	INRB	
INRC	INRI	
INRJ	♦NAT	
SES	SYN	
	TNC	
2N1795	△WESY	440- 41
GESY	INRB	
INRC	INRI	
INRJ	♦NAT	
SES	SYN	
	TNC	
JAN2N1795	GESY	438- 40
	INRC	
2N1796	△WESY	445-100
GESY	INRB	
INRC	INRI	
INRJ	♦NAT	
SES	SYN	
	TNC	
2N1797	△WESY	448- 59
GESY	INRB	
INRC	INRI	
INRJ	♦NAT	
SES	SYN	
	TNC	
JAN2N1797	INRC	446- 41
2N1798	△WESY	456-109
GESY	INRB	
INRC	INRI	
INRJ	♦NAT	
SES	SYN	
	TNC	
JAN2N1798	GESY	454- 62
	INRC	
2N1799	△WESY	467- 7
INRB	INRC	
INRI	INRJ	
♦NAT	SES	
SYN	TNC	
JAN2N1799	INRC	460- 86
2N1800	△WESY	473- 72
INRB	INRC	
INRI	INRJ	
♦NAT	SES	
SYN	TNC	
JAN2N1800	INRC	467- 94
2N1801	△WESY	471-104
INRB	INRC	
INRI	INRJ	
♦NAT	SES	
SYN	TNC	
2N1802	△WESY	476- 39
INRB	INRC	
INRI	INRJ	
♦NAT	SES	
SYN	TNC	
2N1803	△WESY	480- 42
INRB	INRC	
INRI	INRJ	
♦NAT	SES	
SYN	TNC	
2N1804	△WESY	483- 23
INRB	INRC	
INRI	INRJ	
SES	SYN	
	TNC	
2N1805	△WESY	460- 33
INRB	INRC	
INRI	INRJ	
♦NAT	SES	
SYN	TNC	
JAN2N1805	INRC	460- 87
2N1806	△WESY	467- 4
INRB	INRC	
INRI	INRJ	
♦NAT	SES	
SYN	TNC	
JAN2N1806	INRC	467- 95
2N1807	△WESY	471-101
INRB	INRC	
INRI	INRJ	
♦NAT	SES	
SYN	TNC	
2N1842	♦△GESY	415- 28

cont next page

1. TYPE No. CROSS INDEX

IN TYPE NUMBER SEQUENCE

TYPE No.	MFRS	Pg&Line
2N1842		
(cont)	♦ESMF	
	INRB	
	INRI	
	MISI	
	NAT	
	♦SEN	
	TEC	
	TNC	
2N1842A	△WESY	415 - 33
	GESY	
	INRC	
	INRJ	
	♦RCA	
	TEC	
2N1842B	INRB	415 - 34
	INRC	
	INRJ	
2N1843	♦△GESY	419 - 63
	♦ESMF	
	INRC	
	INRJ	
	♦MOTA	
	SCN	
	SES	
	TEK	
2N1843A	△WESY	419 - 72
	GESY	
	INRC	
	INRJ	
	♦RCA	
	SOIF	
2N1843B	INRB	419 - 86
	INRC	
	INRJ	
2N1844	♦△GESY	426 - 5
	♦ESMF	
	INRC	
	INRJ	
	♦MOTA	
	PHIC	
	♦SEN	
	TEC	
	TNC	
2N1844A	△WESY	426 - 25
	GESY	
	INRC	
	INRJ	
	♦RCA	
	SOIF	
2N1844B	INRB	426 - 62
	INRC	
	INRJ	
2N1845	♦△GESY	430 - 92
	♦ESMF	
	INRC	
	INRJ	
	♦MOTA	
	SCN	
	SES	
	TEK	
2N1845A	△WESY	430 - 95
	GESY	
	INRC	
	INRJ	
	♦RCA	
	TEC	
2N1845B	INRB	430 - 96
	INRC	
	INRJ	
2N1846	♦△GESY	435 - 36
	♦ESMF	
	INRC	
	INRJ	
	♦MOTA	
	PHIC	
	♦SEN	
	TEC	
	TNC	
2N1846A	△WESY	435 - 57
	GESY	
	INRC	
	INRJ	
	♦RCA	
	SOIF	
2N1846B	INRB	435 - 96
	INRC	
	INRJ	
2N1847	♦△GESY	441 - 2
	♦ESMF	
	INRC	
	INRJ	
	♦MOTA	
	SCN	
	SES	
	TEK	
2N1847A	△WESY	441 - 5
	GESY	
	INRC	
	INRJ	
	♦RCA	
	TEC	
2N1847B	INRB	441 - 6
	INRC	
	INRJ	
2N1848	♦△GESY	443 -104
	♦ESMF	
cont next col		

TYPE No.	MFRS	Pg&Line
2N1848		
(cont)	INRC	
	INRI	
	MISI	
	NAT	
	SCN	
	SES	
	TEK	
2N1848A	△WESY	444 - 12
	GESY	
	INRC	
	INRJ	
	♦RCA	
	SOIF	
2N1848B	INRB	444 - 36
	INRC	
	INRJ	
2N1849	♦△GESY	451 - 35
	♦ESMF	
	INRC	
	INRJ	
	♦MOTA	
	PHIC	
	♦SEN	
	TEC	
	TNC	
2N1849A	△WESY	451 - 54
	GESY	
	INRC	
	INRJ	
	♦RCA	
	SOIF	
2N1849B	INRB	451 - 91
	INRC	
	INRJ	
2N1850	♦△GESY	458 - 27
	♦ESMF	
	INRC	
	INRJ	
	♦MOTA	
	PHIC	
	♦SEN	
	TEC	
	TNC	
2N1850A	GESY	458 - 49
	INRB	
	INRI	
	♦MOTA	
	♦SEN	
	TEC	
2N1850B	INRB	458 - 76
	INRC	
2N1869	△UNI	414 - 56
	TEC	
2N1870	△UNI	416-102
	TEC	
2N1870A	△UNI	416-103
	TEC	
JAN2N1870A	TEC	416 - 61
	UNI	
2N1871	△UNI	422 - 37
	CNS	TEC	499 - 83
		TNC	
2N1871A	△UNI	422 - 38
	TEC	
JAN2N1871A	TEC	421-106
	UNI	
2N1872	△UNI	424 - 12
	TEC	
2N1872A	△UNI	424 - 13
	CNS	TEC	
JAN2N1872A	TEC	423 - 56
	UNI	
2N1873	△UNI	430 - 52
	CNS	TEC	500 - 39
		TNC	
2N1873A	CNS	500 - 40
2N1874	△UNI	433 - 5
	CNS	TEC	501-108
		TNC	
2N1874A	△UNI	433 - 6
	TEC	
JAN2N1874A	TEC	432 - 57
	UNI	
2N1875	△UNI	414 - 57
	CNS	TEC	499 - 30
2N1875A	TEC	414 - 58
	UNI	
2N1876	△UNI	416-104
	TEC	
2N1876A	TEC	416-105
	UNI	
2N1877	△UNI	422 - 39
	TEC	
2N1877A	TEC	422 - 40
	UNI	
2N1878	△UNI	424 - 14
	TEC	
2N1878A	TEC	424 - 15
	UNI	
2N1879	△UNI	430 - 53
	TEC	
2N1879A	TEC	430 - 54
	UNI	
2N1880	△UNI	433 - 7
	TEC	
2N1880A	TEC	433 - 8
	UNI	
2N1881	△UNI	416-100
	SOIF	TEC	

TYPE No.	MFRS	Pg&Line
2N1882	△UNI	422 - 35
	SOIF	TEC	
2N1883	△UNI	424 - 6
	SOIF	TEC	
2N1884	△UNI	430 - 49
	SOIF	TEC	
2N1885	△UNI	432-109
	SOIF	TEC	
2N1909	△GESY	415 - 81
	INRB	INRC	
	INRI	INRJ	
	NAT	SES	
	SOIF	SYN	
		WESY	
2N1910	△GESY	420 - 85
	INRB	INRC	
	INRI	INRJ	
	NAT	SES	
	SOIF	SYN	
		WESY	
JAN2N1910	GESY	420-106
		INRC	
2N1911	△GESY	428 - 22
	INRB	INRC	
	INRI	INRJ	
	NAT	PHIC	
	SES	SOIF	
	SYN	WESY	
JAN2N1911	GESY	428 - 60
		INRC	
2N1912	△GESY	431 - 32
	INRB	INRC	
	INRI	INRJ	
	NAT	SES	
	SOIF	SYN	
		WESY	
2N1913	△GESY	437 - 83
	INRB	INRC	
	INRI	INRJ	
	NAT	PHIC	
	SES	SOIF	
	SYN	WESY	
JAN2N1913	GESY	438 - 41
		INRC	
2N1914	△GESY	441 - 53
	INRB	INRC	
	INRI	INRJ	
	NAT	SES	
	SOIF	SYN	
		WESY	
2N1915	△GESY	445 - 99
	INRB	INRC	
	INRI	INRJ	
	NAT	PHIC	
	SES	SOIF	
	SYN	WESY	
JAN2N1915	GESY	446 - 42
		INRC	
2N1916	△GESY	453 - 96
	INRB	INRC	
	INRI	INRJ	
	NAT	PHIC	
	SES	SOIF	
	SYN	WESY	
JAN2N1916	GESY	454 - 63
		INRC	
2N1929	♦GESY	414 - 78
		SCN	
2N1930	♦△GESY	417-108
		SCN	
2N1931	♦△GESY	423 - 80
		SCN	
2N1932	♦△GESY	430 - 32
		SCN	
2N1933	♦△GESY	432 - 72
		SCN	
2N1934	♦△GESY	440 - 73
		SCN	
2N1935	♦△GESY	442 - 48
		SCN	
2N2009	△TEC	414 - 82
	ETC	SCN	
		UNI	
2N2010	△TEC	418 - 18
	ETC	SCN	
		UNI	
2N2011	△TEC	424 - 18
	ETC	SCN	
		UNI	
2N2012	ETC	433 - 13
	SCN	TEC	
		UNI	
2N2013	△TEC	442 - 73
	ETC	SCN	
		UNI	
2N2014	△TEC	449 - 25
	SCN	UNI	
2N2023	△GESY	415 - 82
	INRB	INRC	
	INRI	INRJ	
	♦NAT	SES	
		WESY	
2N2024	△GESY	420 - 86
	INRB	INRC	
	INRI	INRJ	
	♦NAT	SES	
		WESY	
JAN2N2024	none	421 - 11
2N2025	△GESY	428 - 27
	INRB	INRC	
	INRI	INRJ	
	♦NAT	SES	
		WESY	
JAN2N2025	none	428 - 81

TYPE No.	MFRS	Pg&Line
2N2026	△GESY	431 - 33
	INRB	INRC	
	INRI	INRJ	
	♦NAT	SES	
		WESY	
2N2027	△GESY	437 - 91
	INRB	INRC	
	INRI	INRJ	
	♦NAT	SES	
		WESY	
JAN2N2027	none	438 - 70
2N2028	△GESY	441 - 54
	INRB	INRC	
	INRI	INRJ	
	♦NAT	SES	
		WESY	
2N2029	△GESY	445-105
	INRB	INRC	
	INRI	INRJ	
	♦NAT	SES	
		WESY	
JAN2N2029	none	446 - 65
2N2030	△GESY	453-104
	INRB	INRC	
	INRI	INRJ	
	♦NAT	SES	
JAN2N2030	none	454 - 93
2N2031	INRB	420 - 84
	INRC	INRI	
	INRJ	SES	
JAN2N2031	GESY	420-107
		INRC	
2N2322	♦△GESY	414 - 89
	♦ESMF	ETC	
	♦FSC	MISI	
	♦MOTA	SCN	
	SES	SOIF	
	SSI	SST	
	TEC	♦TII	
	TNC	♦UNI	
2N2322A	♦FSC	414 - 90
	♦GESY	SCN	
	SES	SSI	
	TEC	UNI	
2N2323	♦△GESY	418 - 29
	♦ESMF	ETC	
	♦FSC	MISI	
	♦MOTA	SCN	
	SES	SOIF	
	SSI	SST	
	TEC	♦TII	
	TNC	♦UNI	
JAN2N2323	GESY	417 - 92
	TEC	UNI	
2N2323A	♦FSC	418 - 30
	♦GESY	SCN	
	SES	SSI	
	TEC	UNI	
JAN2N2323A	GESY	417 - 93
	TEC	UNI	
2N2324	♦△GESY	424 - 31
	♦ESMF	ETC	
	♦FSC	MISI	
	♦MOTA	SCN	
	SES	SOIF	
	SSI	SST	
	TEC	♦TII	
	TNC	♦UNI	
JAN2N2324	GESY	422 - 96
	TEC	UNI	
2N2324A	♦FSC	424 - 32
	♦GESY	SCN	
	SES	SSI	
	TEC	UNI	
JAN2N2324A	GESY	422 - 97
	TEC	UNI	
2N2325	♦△GESY	430 - 62
	♦ESMF	ETC	
	♦FSC	MISI	
	♦MOTA	SCN	
	SES	SOIF	
	SSI	SST	
	TEC	♦TII	
	TNC	♦UNI	
2N2325A	♦FSC	430 - 63
	♦GESY	SCN	
	SES	SSI	
	TEC	UNI	
2N2326	♦△GESY	433 - 32
	♦ESMF	ETC	
	♦FSC	MISI	
	♦MOTA	SCN	
	SES	SOIF	
	SSI	TEC	
	♦TII	TNC	
		♦UNI	
JAN2N2326	GESY	431-104
	TEC	UNI	
2N2326A	♦FSC	433 - 33
	♦GESY	SCN	
	SES	SSI	
	TEC	UNI	
JAN2N2326A	GESY	431-105
	TEC	UNI	
2N2327	♦△GESY	440 - 89
	♦ESMF	♦FSC	
	MISI	SCN	
	SES	SSI	
	TEC	TNC	
		♦UNI	
2N2327A	♦FSC	440 - 90
	♦GESY	SCN	
	SSI	TEC	
		UNI	

TYPE No.	MFRS	Pg&Line
2N2328	♦△GESY	442 - 84
	♦ESMF	♦FSC	
	MISI	SCN	
	SES	SSI	
	TEC	TNC	
		♦UNI	
JAN2N2328	TEC	442 - 1
		UNI	
2N2328A	♦FSC	442 - 85
	♦GESY	SCN	
	SSI	TEC	
		UNI	
JAN2N2328A	TEC	442 - 2
		UNI	
2N2329	♦△GESY	449 - 44
	♦ESMF	♦FSC	
	MISI	SCN	
	SSI	TEC	
	TNC	♦UNI	
JAN2N2329	TEC	448 - 72
		UNI	
2N2329A	♦FSC	449 - 45
	SCN	SSI	
	TEC	UNI	
2N2344	GESY	414 - 86
	SCN	SES	
	TEC	♦UNI	
2N2345	△GESY	418 - 23
	SCN	SES	
	TEC	♦UNI	
2N2346	△GESY	424 - 24
	SCN	SES	
	TEC	♦UNI	
2N2347	△GESY	430 - 58
	SCN	SES	
	TEC	♦UNI	
2N2348	△GESY	433 - 25
	SCN	SES	
	TEC	♦UNI	
2N2503	△INRC	421 - 18
	INRB	INRI	
	INRJ	SES	
2N2504	△INRC	428 - 95
	INRB	INRI	
	INRJ	SES	
2N2505	△INRC	438-105
	INRB	INRI	
	INRJ	SES	
2N2506	INRB	446 - 88
	INRC	INRI	
	INRJ	SES	
2N2507	△INRC	455 - 20
	INRB	INRI	
	INRJ	SES	
2N2508	△INRC	461 - 38
	INRB	INRI	
	INRJ	SES	
2N2542	INRB	421 - 19
	INRC	INRI	
		INRJ	
2N2543	INRB	428 - 96
	INRC	INRI	
		INRJ	
2N2544	INRB	438-106
	INRC	INRI	
		INRJ	
2N2545	INRB	446 - 89
	INRC	INRI	
		INRJ	
2N2546	INRB	455 - 21
	INRC	INRI	
		INRJ	
2N2547	INRB	461 - 39
	INRC	INRI	
		INRJ	
2N2548	INRB	468 - 86
	INRC	INRI	
		INRJ	
2N2549	INRB	477 - 84
	INRC	INRI	
		INRJ	
2N2550	INRB	484 - 35
	INRC	INRI	
		INRJ	
2N2573	♦△MOTA	415 - 64
2N2574	♦△MOTA	420 - 46
2N2575	♦△MOTA	427 - 66
2N2576	♦△MOTA	436-107
2N2577	♦△MOTA	445 - 9
2N2578	♦△MOTA	452-104
2N2579	♦△MOTA	459 - 60
2N2619	♦ESMF	463 - 41
	♦GESY	INRB	
	INRC	INRI	
	INRJ	MISI	
	SCN	TAGS	
		TEC	
2N2679	△TEC	416 - 48
		UNI	
2N2679A	TEC	416 - 49
2N2680	△TEC	421 - 93
		UNI	
2N2680A	TEC	421 - 94
2N2681	△TEC	423 - 37
		UNI	
2N2681A	TEC	423 - 38
2N2682	△TEC	432 - 40
		UNI	
2N2682A	TEC	432 - 41
2N2683	△TEC	416 - 44
	SSI	UNI	
2N2683A	TEC	416 - 45
2N2684	△TEC	421 - 88
	SSI	UNI	

△-Registered with JEDEC by this manufacturer

♦-Copy of mfr's data sheet may be ordered from D.A.T.A.

1. TYPE No. CROSS INDEX

IN TYPE NUMBER SEQUENCE

TYPE No.	MFRS	Pg&Line
2N2684A	TEC	421- 89
2N2685	△TEC	423- 29
SSI	UNI	
2N2685A	TEC	423- 30
2N2686	△TEC	432- 33
SSI	UNI	
2N2686A	TEC	432- 34
2N2687	△TEC	416- 46
	UNI	
2N2688	△TEC	421- 90
	UNI	
2N2689	△TEC	423- 31
	UNI	
2N2690	△TEC	432- 35
	UNI	
2N2888	INRB	436- 19
INRC	INRI	
	INRJ	
2N2889	INRB	441- 11
INRC	INRI	
	INRJ	
2N3001	♦△TII	416- 50
SST	TEC	
TIIB	UNI	
2N3002	♦△TII	421- 95
TEC	TIIB	
	UNI	
2N3003	♦△TII	423- 39
TEC	TIIB	
	UNI	
2N3004	♦△TII	432- 42
TEC	TIIB	
	UNI	
2N3005	♦△TII	416- 51
SST	TEC	
TIIB	UNI	
2N3006	♦△TII	421- 96
TEC	TIIB	
	UNI	
2N3007	♦△TII	423- 40
TEC	TIIB	
	UNI	
2N3008	TEC	432- 43
♦TII	TIIB	
	UNI	
2N3027	SST	416- 64
TEC	UNI	
JAN2N3027	UNI	415-110
2N3028	TEC	422- 5
	UNI	
JAN2N3028	UNI	421- 52
2N3029	TEC	423- 66
	UNI	
JAN2N3029	UNI	422- 98
2N3030	TEC	416- 65
	UNI	
JAN2N3030	UNI	416- 1
2N3031	TEC	422- 6
	UNI	
JAN2N3031	UNI	421- 53
2N3032	TEC	423- 67
	UNI	
JAN2N3032	UNI	422- 99
2N3091	△INRC	467- 5
INRB	INRI	
INRJ	SES	
JAN2N3091	INRC	467- 96
2N3092	△INRC	471-102
INRB	INRI	
INRJ	SES	
2N3093	△INRC	476- 37
INRB	INRI	
INRJ	SES	
JAN2N3093	INRC	477- 6
2N3094	△INRC	480- 40
INRB	INRI	
INRJ	SES	
2N3095	△INRC	483- 21
INRB	INRI	
INRJ	SES	
JAN2N3095	INRC	483- 79
2N3096	△INRC	486- 33
INRB	INRI	
INRJ	SES	
2N3097	△INRC	488- 37
INRB	INRI	
INRJ	SES	
JAN2N3097	INRC	488- 87
2N3098	△INRC	490- 86
INRB	INRI	
INRJ	SES	
JAN2N3098	none	490-105
2N3099	INRB	467- 6
INRC	INRI	
INRJ	SES	
JAN2N3099	none	467- 97
2N3100	△INRC	471-103
INRB	INRI	
INRJ	SES	
2N3101	△INRC	476- 38
INRB	INRI	
INRJ	SES	
JAN2N3101	none	477- 7
2N3102	△INRC	480- 41
INRB	INRI	
INRJ	SES	
2N3103	△INRC	483- 22
INRB	INRI	
INRJ	SES	
JAN2N3103	none	483- 80
2N3104	△INRC	486- 34
INRB	INRI	
INRJ	SES	

TYPE No.	MFRS	Pg&Line
2N3105	△INRC	488- 38
INRB	INRI	
INRJ	SES	
JAN2N3105	none	488- 88
2N3106	INRB	490- 87
INRC	INRI	
INRJ	SES	
JAN2N3106	none	490-106
2N3228	♦△RCA	433- 75
ATEI	♦FSC	
TAGS	TEC	
2N3254	TEC	414- 10
	UNI	
2N3255	TEC	416- 24
	UNI	
2N3256	TEC	421- 65
	UNI	
2N3257	TEC	414- 11
	UNI	
2N3258	TEC	416- 25
	UNI	
2N3259	TEC	421- 66
	UNI	
2N3269	ATEI	499-104
	♦FSC	
2N3270	ATEI	501-100
	♦FSC	
2N3271	ATEI	502-110
	♦FSC	
2N3272	ATEI	504- 98
	♦FSC	
2N3273	♦FSC	424- 52
TEC	UNI	
2N3274	♦FSC	433- 52
TEC	UNI	
2N3275	♦FSC	442- 95
TEC	UNI	
2N3276	♦FSC	449- 58
TEC	UNI	
2N3353	△WESY	421- 34
INRB	INRC	
INRI	INRJ	
2N3354	△WESY	429- 34
INRB	INRC	
INRI	INRJ	
2N3355	INRB	439- 75
INRC	INRI	
INRJ	WESY	
2N3356	INRB	447- 34
INRC	INRI	
INRJ	WESY	
2N3357	△WESY	455-102
INRB	INRC	
INRI	INRJ	
2N3358	△WESY	461- 95
INRB	INRC	
INRI	INRJ	
2N3359	△WESY	469- 70
INRB	INRC	
INRI	INRJ	
2N3360	△WESY	473- 9
INRB	INRC	
INRI	INRJ	
2N3361	△WESY	478- 56
INRB	INRC	
INRI	INRJ	
2N3362	△WESY	481- 45
INRB	INRC	
INRI	INRJ	
2N3363	△WESY	484-101
INRB	INRC	
INRI	INRJ	
2N3364	INRB	489- 78
INRC	INRI	
INRJ	WESY	
2N3525	ATEI	449- 78
♦FSC	♦RCA	
TAGS	TEC	
2N3528	♦RCA	433- 11
2N3529	♦RCA	449- 23
2N3530	△WESY	421- 45
INRB	INRC	
INRI	INRJ	
2N3531	△WESY	429- 57
INRB	INRC	
INRI	INRJ	
2N3532	△WESY	439-101
INRB	INRC	
INRI	INRJ	
2N3533	INRB	447- 62
INRC	INRI	
INRJ	WESY	
2N3534	△WESY	456- 21
INRB	INRC	
INRI	INRJ	
2N3535	△WESY	462- 13
INRB	INRC	
INRI	INRJ	
2N3536	△WESY	469-103
INRB	INRC	
INRI	INRJ	
2N3537	△WESY	473- 26
INRB	INRC	
INRI	INRJ	
2N3538	△WESY	478- 87
INRB	INRC	
INRI	INRJ	
2N3539	△WESY	481- 61
INRB	INRC	
INRI	INRJ	
2N3540	△WESY	485- 19
INRB	INRC	
INRI	INRJ	

TYPE No.	MFRS	Pg&Line
2N3541	△WESY	489-102
INRB	INRC	
INRI	INRJ	
2N3555	♦△TII	416-109
TEC	TIIB	
	UNI	
2N3556	♦△TII	422- 43
TEC	TIIB	
	UNI	
2N3557	♦△TII	424- 36
TEC	TIIB	
	UNI	
2N3558	♦△TII	433- 37
TEC	TIIB	
	UNI	
2N3559	♦△TII	416-110
TEC	TIIB	
	UNI	
2N3560	♦△TII	422- 44
TEC	TIIB	
	UNI	
2N3561	♦△TII	424- 37
TEC	TIIB	
	UNI	
2N3562	♦△TII	433- 38
TEC	TIIB	
	UNI	
2N3649	♦ESMF	420- 8
GESY	MISI	
	SOIF	
2N3650	△GESY	426-101
♦ESMF	MISI	
♦RCA	SOIF	
2N3651	△GESY	436- 29
♦ESMF	MISI	
♦RCA	SOIF	
2N3652	△GESY	444- 60
♦ESMF	MISI	
♦RCA	SOIF	
2N3653	△GESY	452- 21
♦ESMF	MISI	
♦RCA	SOIF	
2N3654	△GESY	420- 9
♦ESMF	MISI	
	SOIF	
2N3655	△GESY	426-102
♦ESMF	MISI	
	SOIF	
2N3656	△GESY	436- 30
♦ESMF	MISI	
	SOIF	
2N3657	△GESY	444- 61
♦ESMF	MISI	
	SOIF	
2N3658	△GESY	452- 22
♦ESMF	MISI	
	SOIF	
2N3668	♦RCA	426- 63
2N3669	♦RCA	435- 97
2N3670	♦RCA	451- 92
2N3753	△GESY	419- 49
	NAT	
2N3754	△GESY	425- 88
	NAT	
2N3755	△GESY	435- 1
	NAT	
2N3756	△GESY	443- 79
	NAT	
2N3757	△GESY	450-107
	NAT	
2N3758	△GESY	458- 12
	NAT	
2N3759	△GESY	464- 18
	NAT	
2N3760	△GESY	470-100
	NAT	
2N3761	△GESY	474- 62
	NAT	
2N3870	♦△RCA	427- 29
2N3871	♦△RCA	436- 71
2N3872	♦△RCA	452- 65
2N3873	♦△RCA	465- 77
2N3884	△WESY	421- 23
INRB	INRC	
INRI	INRJ	
	SES	
2N3885	△WESY	429- 1
INRB	INRC	
INRI	INRJ	
	SES	
2N3886	△WESY	439- 24
INRB	INRC	
INRI	INRJ	
	SES	
2N3887	△WESY	446-103
INRB	INRC	
INRI	INRJ	
	SES	
2N3888	△WESY	455- 48
INRB	INRC	
INRI	INRJ	
	SES	
2N3889	△WESY	461- 54
INRB	INRC	
INRI	INRJ	
	SES	
2N3890	△WESY	469- 6
INRB	INRC	
INRI	INRJ	
	SES	
2N3891	△WESY	472- 90
INRB	INRC	
INRI	INRJ	
	SES	

TYPE No.	MFRS	Pg&Line
2N3892	△WESY	478- 2
INRB	INRC	
INRI	INRJ	
	SES	
2N3893	△WESY	481- 21
INRB	INRC	
INRI	INRJ	
	SES	
2N3894	△WESY	484- 58
INRB	INRC	
INRI	INRJ	
	SES	
2N3895	△WESY	489- 42
INRB	INRC	
INRI	INRJ	
	SES	
2N3896	♦△RCA	427- 30
	♦TAGS	
2N3897	♦△RCA	436- 72
	♦TAGS	
2N3898	♦△RCA	452- 66
	♦TAGS	
2N3899	♦△RCA	465- 78
	♦TAGS	
2N3936	SSI	425- 72
2N3937	SSI	434- 93
2N3938	SSI	443- 70
2N3939	SSI	450- 89
2N3940	SSI	457-108
2N3986	INRB	460- 34
INRC	INRI	
	INRJ	
2N3987	INRB	467- 8
INRC	INRI	
	INRJ	
2N3988	INRB	471-105
INRC	INRI	
	INRJ	
2N3989	INRB	476- 40
INRC	INRI	
	INRJ	
2N3990	INRB	480- 43
INRC	INRI	
	INRJ	
2N3991	INRB	483- 24
INRC	INRI	
	INRJ	
2N3992	INRB	486- 35
INRC	INRI	
	INRJ	
2N4096	♦FSC	418- 1
SSI	TEC	
	UNI	
2N4097	♦FSC	423- 89
SSI	TEC	
	UNI	
2N4098	♦FSC	432- 82
SSI	TEC	
2N4101	♦△RCA	463- 27
	ATEI	
2N4102	♦△RCA	462-100
2N4103	♦△RCA	464- 25
2N4108	♦FSC	418- 2
SSI	TEC	
	UNI	
2N4109	♦FSC	423- 90
SSI	TEC	
	UNI	
2N4110	♦FSC	432- 83
SSI	TEC	
	UNI	
2N4144	TEC	414- 2
	UNI	
2N4145	TEC	416- 2
	UNI	
2N4146	TEC	421- 54
	UNI	
2N4147	TEC	422-100
	UNI	
2N4148	TEC	429-109
	UNI	
2N4149	TEC	431-106
	UNI	
2N4151	♦△MOTA	415- 2
2N4152	♦△MOTA	418- 94
2N4153	♦△MOTA	425- 1
2N4154	♦△MOTA	434- 15
2N4155	♦△MOTA	443- 28
2N4156	♦△MOTA	450- 13
2N4157	♦△MOTA	457- 66
2N4158	♦△MOTA	463- 50
2N4159	♦△MOTA	415- 3
2N4160	♦△MOTA	418- 95
2N4161	♦△MOTA	425- 2
2N4162	♦△MOTA	434- 16
2N4163	♦△MOTA	443- 29
2N4164	♦△MOTA	450- 14
2N4165	♦△MOTA	457- 67
2N4166	♦△MOTA	463- 51
2N4167	♦△MOTA	414-110
2N4168	♦△MOTA	418- 90
2N4169	♦△MOTA	424-106
2N4170	♦△MOTA	434- 10
2N4171	♦△MOTA	443- 25
2N4172	♦△MOTA	450- 9
2N4173	♦△MOTA	457- 62
2N4174	♦△MOTA	463- 47
2N4175	♦△MOTA	415- 1
2N4176	♦△MOTA	418- 91
2N4177	♦△MOTA	424-107
2N4178	♦△MOTA	434- 11
2N4179	♦△MOTA	443- 26
2N4180	♦△MOTA	450- 10
2N4181	♦△MOTA	457- 63

TYPE No.	MFRS	Pg&Line
2N4182	♦△MOTA	463- 48
2N4183	♦△MOTA	415- 4
2N4184	♦△MOTA	418- 96
2N4185	♦△MOTA	425- 3
2N4186	♦△MOTA	434- 17
2N4187	♦△MOTA	443- 30
2N4188	♦△MOTA	450- 15
2N4189	♦△MOTA	457- 68
2N4190	♦△MOTA	463- 52
2N4191	♦△MOTA	415- 5
2N4192	♦△MOTA	418- 97
2N4193	♦△MOTA	425- 4
2N4194	♦△MOTA	434- 18
2N4195	♦△MOTA	443- 31
2N4196	♦△MOTA	450- 16
2N4197	♦△MOTA	457- 69
2N4198	♦△MOTA	463- 53
2N4199	♦△MOTA	442- 93
JAN2N4199	MOTA	442- 92
2N4200	♦△MOTA	449- 56
JAN2N4200	MOTA	449- 55
2N4201	♦△MOTA	457- 37
JAN2N4201	MOTA	457- 36
2N4202	♦△MOTA	463- 7
JAN2N4202	MOTA	463- 6
2N4203	♦△MOTA	470- 80
JAN2N4203	MOTA	470- 79
2N4204	♦△MOTA	474- 6
JAN2N4204	MOTA	474- 5
JAN2N4205	none	479- 66
JAN2N4206	none	482- 12
2N4212	♦△MOTA	414- 80
ETC	♦FSC	
SSI	TEC	
	UNI	
2N4213	♦△MOTA	418- 14
ETC	♦FSC	
SSI	TEC	
	UNI	
2N4214	♦△MOTA	424- 4
ETC	♦FSC	
SSI	TEC	
	UNI	
2N4215	♦△MOTA	430- 48
ETC	♦FSC	
SSI	TEC	
	UNI	
2N4216	♦△MOTA	432-107
ETC	♦FSC	
SSI	TEC	
	UNI	
2N4217	♦FSC	440- 84
SSI	TEC	
	UNI	
2N4218	♦FSC	442- 68
SSI	TEC	
	UNI	
2N4219	♦FSC	449- 17
TEC	UNI	
2N4316	♦△FSC	425- 93
	SSI	
2N4317	♦△FSC	435- 11
	SSI	
2N4318	♦△FSC	443- 84
	SSI	
2N4319	♦△FSC	451- 7
2N4320	TEC	497- 27
2N4321	TEC	497- 42
2N4322	TEC	497- 58
2N4323	TEC	497- 69
2N4324	TEC	497- 85
2N4325	TEC	497- 93
2N4326	TEC	497- 29
2N4327	TEC	497- 45
2N4328	TEC	497- 61
2N4329	TEC	497- 71
2N4330	TEC	497- 87
2N4331	TEC	497- 95
2N4332	TEC	416- 57
2N4333	TEC	421-103
2N4334	TEC	423- 49
2N4335	TEC	430- 27
2N4336	TEC	432- 51
2N4337	TEC	440- 69
2N4361	△WESY	428- 25
INRB	INRC	
INRI	INRJ	
NAT	SES	
	SYN	
2N4362	△WESY	437- 86
INRB	INRC	
INRI	INRJ	
NAT	SES	
	SYN	
2N4363	△WESY	453- 99
INRB	INRC	
INRI	INRJ	
NAT	SES	
	SYN	
2N4364	△WESY	467- 11
INRB	INRC	
INRI	INRJ	
NAT	SES	
	SYN	
2N4365	△WESY	476- 43
INRB	INRC	
INRI	INRJ	
NAT	SES	
	SYN	
2N4366	△WESY	483- 26
INRB	INRC	
INRI	INRJ	
NAT	SES	
	SYN	

△-Registered with JEDEC by this manufacturer

♦-Copy of mfr's data sheet may be ordered from D.A.T.A.

1. TYPE No. CROSS INDEX

IN TYPE NUMBER SEQUENCE

TYPE No.	MFRS	Pg&Line
2N4367	△WESY	488- 40
INRB	INRC	
INRI	INRJ	
NAT	SES	
	SYN	
2N4368	△WESY	492- 3
INRB	INRC	
INRI	INRJ	
NAT	SES	
2N4369	INRB	493- 53
INRC	INRI	
INRJ	WESY	
2N4370	△WESY	494- 51
2N4371	△WESY	428- 26
INRB	INRC	
INRI	INRJ	
NAT	SES	
	SYN	
2N4372	△WESY	437- 87
INRB	INRC	
INRI	INRJ	
NAT	SES	
	SYN	
2N4373	△WESY	453-100
INRB	INRC	
INRI	INRJ	
NAT	SES	
	SYN	
2N4374	△WESY	467- 12
INRB	INRC	
INRI	INRJ	
NAT	SES	
	SYN	
2N4375	△WESY	476- 44
INRB	INRC	
INRI	INRJ	
NAT	SES	
	SYN	
2N4376	△WESY	483- 27
INRB	INRC	
INRI	INRJ	
NAT	SES	
	SYN	
2N4377	△WESY	488- 41
INRB	INRC	
INRI	INRJ	
NAT	SES	
	SYN	
2N4378	△WESY	492- 4
INRB	INRC	
INRI	INRJ	
NAT	SES	
2N4379	△WESY	493- 54
INRB	INRC	
INRI	INRJ	
2N4380	WESY	494- 52
2N4441	♦△MOTA	418- 98
2N4442	♦△MOTA	434- 19
2N4443	♦△MOTA	450- 17
2N4444	♦△MOTA	463- 54
2N4983	♦△GESY	416- 6
2N4984	♦△GESY	416- 10
2N4985	♦△GESY	416- 11
2N4986	♦△GESY	416- 7
	CNS	
2N4987	♦△GESY	416- 8
2N4988	♦△GESY	416- 12
2N4989	♦△GESY	416- 13
2N4990	♦△GESY	416- 9
2N4991	♦△GESY	598- 29
2N4992	♦△GESY	598- 30
2N4993	♦△GESY	598- 31
2N5060	♦△MOTA	416- 41
♦SES	SPR	
	♦TEC	
2N5061	♦△MOTA	421- 85
♦SES	SPR	
	♦TEC	
2N5062	♦△MOTA	423- 25
♦SES	♦TEC	
2N5063	♦△MOTA	430- 21
♦SES	♦TEC	
2N5064	♦△MOTA	432- 29
♦SES	♦TEC	
2N5164	♦△MOTA	419- 40
2N5165	♦△MOTA	434- 94
2N5166	♦△MOTA	450- 90
2N5167	♦△MOTA	464- 3
2N5168	♦△MOTA	419- 41
2N5169	♦△MOTA	434- 95
2N5170	♦△MOTA	450- 91
2N5171	♦△MOTA	464- 4
2N5204	♦△GESY	465- 73
INRB	INRC	
INRI	INRJ	
2N5205	♦△GESY	475- 39
2N5206	♦△GESY	482- 55
2N5207	♦△GESY	487- 87
2N5257	♦△INRC	505- 90
♦INRB	♦INRI	
	♦INRJ	
2N5258	♦△INRC	508- 20
♦INRB	♦INRI	
	♦INRJ	
2N5259	♦△INRC	509- 10
♦INRB	♦INRI	
	♦INRJ	
2N5260	♦△INRC	509- 19
♦INRB	♦INRI	
	♦INRJ	
2N5261	△INRC	509- 28
INRB	INRI	
	INRJ	

TYPE No.	MFRS	Pg&Line
2N5273	♦TII	502- 75
TIID	TIIF	
2N5274	♦TII	505- 69
TIID	TIIF	
2N5275	♦TII	508- 8
TIID	TIIF	
2N5410	△TRW	324- 50
2N5441	♦△RCA	499- 9
2N5442	♦△RCA	499- 21
2N5443	♦△RCA	499- 26
2N5444	♦△RCA	499- 10
2N5445	♦△RCA	499- 22
2N5446	♦△RCA	499- 27
2N5567	♦△RCA	499- 3
	TEC	
2N5568	♦△RCA	499- 15
	TEC	
2N5569	♦△RCA	499- 4
	TEC	
2N5570	♦△RCA	499- 16
	TEC	
2N5571	♦△RCA	499- 6
	TEC	
2N5572	♦△RCA	499- 18
2N5573	♦△RCA	499- 7
2N5574	♦△RCA	499- 19
2N5719	△UNI	421- 64
2N5720	△UNI	423- 6
2N5721	△UNI	432- 11
2N5722	△UNI	442- 15
2N5723	△UNI	448- 81
2N5724	△UNI	421-104
2N5725	△UNI	423- 50
2N5726	△UNI	432- 52
2N5727	△UNI	442- 34
2N5728	△UNI	448- 88
2N5754	♦△RCA	498-105
2N5755	♦△RCA	498-109
2N5756	♦△RCA	499- 12
2N5757	♦△RCA	499- 24
2N5787	♦△FSC	416- 3
2N5788	♦△FSC	421- 55
2N5789	♦△FSC	422-107
2N5790	♦△FSC	432- 3
2N5791	♦△FSC	442- 9
2N5792	♦△FSC	448- 80
2N5806	△TII	436-104
JAN2N5806	none	500- 42
2N5807	△TII	452-101
JAN2N5807	none	503- 39
2N5808	△TII	459- 57
JAN2N5808	none	505-100
2N5809	△TII	465-109
JAN2N5809	none	507- 22
2N6068	△MOTA	498-100
2N6069	△MOTA	498-101
2N6070	△MOTA	498-106
2N6071	△MOTA	498-110
2N6072	△MOTA	499- 11
2N6073	△MOTA	499- 13
2N6074	△MOTA	499- 23
2N6075	△MOTA	499- 25
2OA72	♦PHIC	249- 56
2OA79	♦MULB	247- 87
	♦PHIC	
2R9 1,A,B	SOD	186- 92
2R10,A,B	SOD	188-182
2R11,A,B	SOD	190-165
2R12,A,B	SOD	193- 75
2R13,A,B	SOD	195-104
2R15,A,B	SOD	198- 77
2R16,A,B	SOD	200- 52
2R18,A,B	SOD	202-167
2R20,A,B	SOD	205-107
2R22,A,B	SOD	207- 92
2R24,A,B	SOD	209- 70
2R27,A,B	SOD	211-158
2R30,A,B	SOD	213-153
2R33,A,B	SOD	215-122
2R36,A,B	SOD	217- 18
2R39,A,B	SOD	218- 99
2R43,A,B	SOD	219-176
2R47,A,B	SOD	221-121
2R51,A,B	SOD	223- 64
2R56,A,B	SOD	224-151
2R62,A,B	SOD	226- 95
2R68,A,B	SOD	227-156
2R75,A,B	SOD	229- 69
2R82,A,B	SOD	230-147
2R91,A,B	SOD	232- 81
2R100,A,B	SOD	233-130
2R110,A,B	SOD	235- 89
2R120,A,B	SOD	236-116
2R130,A,B	SOD	237-148
2R140,A,B	SOD	238-126
2R150,A,B	SOD	239-130
2R160,A,B	SOD	240-148
2R175,A,B	SOD	241-134
2R180,A,B	SOD	242- 93
2R200,A,B	SOD	243-129
2SF11	NECJ	419- 31
2SF12	NECJ	425- 63
2SF14	NECJ	434- 81
2SF16	NECJ	443- 62
2SF18	NECJ	450- 77
2SF22	NECJ	426- 42
2SF24	NECJ	435- 76
2SF26	NECJ	444- 19
2SF28	NECJ	451- 73
2SF32A	NECJ	427- 28
2SF34A	NECJ	436- 68
2SF36A	NECJ	444- 93
2SF38A	NECJ	452- 62
2SF71	SHEJ	415- 35

TYPE No.	MFRS	Pg&Line
2SF72	SHEJ	419- 87
2SF73	SHEJ	426- 64
2SF74	SHEJ	430- 97
2SF75	SHEJ	435- 98
2SF76	SHEJ	444- 39
2SF77	SHEJ	451- 95
2SF101	NECJ	417- 98
2SF102	NECJ	423- 47
2SF104	NECJ	432- 49
2SF106	NECJ	442- 33
2SF108	NECJ	448- 87
2SF112	NECJ	428- 9
2SF114	NECJ	437- 65
2SF116	NECJ	445- 69
2SF118	NECJ	453- 71
2SF120	NECJ	460- 5
2SF122	NECJ	428- 43
2SF124	NECJ	438- 12
2SF126	NECJ	446- 19
2SF128	NECJ	454- 31
2SF130	NECJ	460- 63
2SF131	TSAJ	415- 56
2SF132	TSAJ	420- 35
2SF133	TSAJ	427- 46
2SF134	TSAJ	431- 1
2SF135	TSAJ	436- 86
2SF136	TSAJ	444-102
2SF137	TSAJ	452- 83
2SF138	TSAJ	459- 44
2SF139	TSAJ	458- 81
2SF200	NECJ	457-101
2SF201	NECJ	463-109
2SF202	NECJ	470- 93
2SF205	NECJ	458- 60
2SF206	NECJ	464- 86
2SF210A	NECJ	459- 33
2SF211A	NECJ	465- 74
2SF221	SHEJ	415- 16
	TSAJ	
2SF222	SHEJ	419- 10
	TSAJ	
2SF223	SHEJ	425- 30
	TSAJ	
2SF224	SHEJ	430- 82
	TSAJ	
2SF225	SHEJ	434- 50
	TSAJ	
2SF226	SHEJ	443- 46
	TSAJ	
2SF227	SHEJ	450- 46
	TSAJ	
2SF228	SHEJ	457- 85
	TSAJ	
2SF229	♦MATJ	429-110
2SF248	♦MATJ	435- 40
2SF261	MITJ	418- 92
2SF261A	MITJ	418- 93
2SF262	MITJ	424-109
2SF262A	MITJ	424-110
2SF263	MITJ	430- 79
2SF263A	MITJ	430- 80
2SF264	MITJ	434- 13
2SF264A	MITJ	434- 14
2SF265	MITJ	440-102
2SF266	MITJ	443- 27
2SF267	MITJ	448- 14
2SF268	MITJ	450- 12
2SF269	MITJ	457- 65
2SF271	MITJ	419- 64
2SF271A	MITJ	419- 65
2SF272	MITJ	426- 7
2SF272A	MITJ	426- 8
2SF273	MITJ	430- 93
2SF273A	MITJ	430- 94
2SF274	MITJ	435- 38
2SF274A	MITJ	435- 39
2SF275	MITJ	441- 3
2SF275A	MITJ	441- 4
2SF276	MITJ	443-106
2SF276A	MITJ	443-107
2SF277	MITJ	448- 18
2SF277A	MITJ	448- 19
2SF278	MITJ	451- 37
2SF278A	MITJ	451- 38
2SF279	MITJ	458- 29
2SF279A	MITJ	458- 30
2SF291	MITJ	420- 20
2SF291A	MITJ	420- 21
2SF292	MITJ	427- 10
2SF292A	MITJ	427- 11
2SF293	MITJ	430-108
2SF293A	MITJ	430-109
2SF294	MITJ	436- 50
2SF294A	MITJ	436- 51
2SF295	MITJ	441- 19
2SF295A	MITJ	441- 20
2SF296	MITJ	444- 79
2SF296A	MITJ	444- 80
2SF297	MITJ	448- 24
2SF297A	MITJ	448- 25
2SF298	MITJ	452- 44
2SF298A	MITJ	452- 45
2SF299	MITJ	459- 12
2SF299A	MITJ	459- 13
2SF311	NECJ	429- 6
2SF312	NECJ	439- 29
2SF313	NECJ	446-109
2SF314	NECJ	455- 54
2SF315	NECJ	461- 60
2SF341	SHEJ	415-107
	TSAJ	
2SF342	SHEJ	421- 15
	TSAJ	

TYPE No.	MFRS	Pg&Line
2SF343	SHEJ	428- 88
	TSAJ	
2SF344	SHEJ	438- 86
	TSAJ	
2SF345	SHEJ	446- 76
	TSAJ	
2SF346	SHEJ	454-109
	TSAJ	
2SF347	SHEJ	461- 29
	TSAJ	
2SF348	SHEJ	468- 63
	TSAJ	
2SF451	MITJ	464- 47
2SF451A	MITJ	464- 48
2SF452	MITJ	474- 75
2SF453	MITJ	482- 22
2SF457	MITJ	465- 52
2SF457A	MITJ	465- 53
2SF458	MITJ	475- 27
2SF459	MITJ	482- 51
2SF521	MITJ	417-100
2SF522	MITJ	423- 51
2SF523	MITJ	432- 53
2SF524	MITJ	442- 35
2SF525	MITJ	448- 89
2SF526	MITJ	457- 18
2SF527	MITJ	462- 85
2SF528	MITJ	418- 49
2SF529	MITJ	424- 58
2SF530	MITJ	433- 64
2SF531	MITJ	442-101
2SF532	MITJ	449- 70
2SF533	MITJ	457- 42
2SF534	MITJ	463- 18
2SF535	MITJ	429- 32
2SF536	MITJ	439- 73
2SF537	MITJ	455-100
2SF538	MITJ	469- 68
2SF539	MITJ	478- 53
2SF540	MITJ	484- 98
2SF541	MITJ	489- 75
2SF542	MITJ	492- 67
2SF543	MITJ	493-105
2SF544	MITJ	494- 62
2SF551	NECJ	467- 40
2SF552	NECJ	476- 71
2SF553	NECJ	483- 47
2SF554	NECJ	488- 59
2SF556	NECJ	469- 14
2SF557	NECJ	478- 11
2SF558	NECJ	484- 66
2SF559	NECJ	489- 49
2SF560	NECJ	493-100
2SF562	♦NECJ	456- 29
2SF563	♦NECJ	470- 6
2SF564	♦NECJ	478- 99
2SF565	♦NECJ	485- 32
2SF566	♦NECJ	490- 4
2SF656	NECJ	417- 99
2SF657	NECJ	423- 48
2SF658	NECJ	432- 50
2SF706	♦NECJ	466- 94
2SF707	♦NECJ	476- 27
2SF708	♦NECJ	483- 13
2SF709	♦NECJ	488- 30
2SF717	NECJ	474- 94
2SF718	NECJ	482- 30
2SF719	NECJ	487- 72
2SF727	NECJ	475- 40
2SF728	NECJ	482- 56
2SF729	NECJ	487- 88
2SF731	NECJ	427-103
2SF732	NECJ	437- 34
2SF733	NECJ	445- 49
2SF734	NECJ	453- 37
2SF736	NECJ	466- 44
2SF737	NECJ	475- 96
2SF738	NECJ	482- 92
2SF739	NECJ	488- 7
2SF752	NECJ	435- 77
2SF752A	NECJ	435- 78
2SF753	NECJ	444- 20
2SF753A	NECJ	444- 21
2SF754	NECJ	464- 87
2SF754A	NECJ	464- 88
2SF755	NECJ	458- 61
2SF755A	NECJ	458- 62
2SF756	NECJ	464- 89
2SF756A	NECJ	464- 90
2SF762	NECJ	436- 69
2SF762A	NECJ	436- 70
2SF763	NECJ	444- 94
2SF763A	NECJ	444- 95
2SF764	NECJ	452- 63
2SF764A	NECJ	452- 64
2SF765	NECJ	459- 34
2SF765A	NECJ	459- 35
2SF766	NECJ	465- 75
2SF766A	NECJ	465- 76
2SF772	NECJ	437- 66
2SF772A	NECJ	437- 67
2SF773	NECJ	445- 70
2SF773A	NECJ	445- 71
2SF774	NECJ	453- 72
2SF774A	NECJ	453- 73
2SF775	NECJ	460- 6
2SF775A	NECJ	460- 7
2SF776	NECJ	466- 77
2SF776A	NECJ	466- 78
2SF782	NECJ	438- 13
2SF782A	NECJ	438- 14
2SF783	NECJ	446- 20
2SF783A	NECJ	446- 21
2SF784	NECJ	454- 32

TYPE No.	MFRS	Pg&Line
2SF784A	NECJ	454- 33
2SF785	NECJ	460- 64
2SF785A	NECJ	460- 65
2SF786	NECJ	467- 57
2SF786A	NECJ	467- 58
2SF788	NECJ	476- 72
2SF788A	NECJ	476- 73
2SF792	NECJ	439- 30
2SF792A	NECJ	439- 31
2SF793	NECJ	446-110
2SF793A	NECJ	447- 1
2SF794	NECJ	455- 55
2SF794A	NECJ	455- 56
2SF795	NECJ	461- 61
2SF795A	NECJ	461- 62
2SF796	NECJ	469- 15
2SF796A	NECJ	469- 16
2SF798	NECJ	478- 34
2SF798A	NECJ	478- 35
2SF802	♦NECJ	439-104
2SF802A	♦NECJ	439-105
2SF803	♦NECJ	445- 73
2SF803A	♦NECJ	447- 65
2SF804	♦NECJ	456- 26
2SF804A	♦NECJ	456- 27
2SF805	♦NECJ	462- 19
2SF805A	♦NECJ	462- 20
2SF806	♦NECJ	470- 3
2SF806A	♦NECJ	470- 4
2SF808	NECJ	479- 28
2SF808A	NECJ	479- 29
2SF812	TOSJ	438- 89
2SF821	NECJ	429- 16
2SF822	NECJ	439- 52
2SF823	NECJ	447- 13
2SF824	NECJ	455- 80
2SF825	NECJ	461- 75
2SF826	NECJ	469- 42
2SF832	NECJ	456- 23
2SF833	NECJ	469-107
2SF834	NECJ	478- 91
2SF835	NECJ	485- 23
2SF836	NECJ	489-106
2SF837	NECJ	494- 9
2SF922	MITJ	429- 42
2SF923	MITJ	439- 85
2SF924	MITJ	456- 4
2SF925	MITJ	469- 83
2SF926	MITJ	478- 68
2SF927	MITJ	485- 1
2SF928	MITJ	489- 86
2SF929	MITJ	492- 74
2SF930	MITJ	494- 1
2SF931	MITJ	494- 66
2SF932	MITJ	478- 97
2SF933	MITJ	485- 28
2SF934	MITJ	489-110
2SF935	MITJ	492- 87
2SF936	MITJ	494- 13
2SF937	MITJ	494- 76
2SF938	MITJ	494-106
2SF939	MITJ	495- 12
2SF940	♦MATJ	433- 72
2SF1060	♦MATJ	433- 73
2SF1110	MITJ	417- 96
2SF1111	MITJ	423- 32
2SF1112	MITJ	432- 36
2SF1113	MITJ	442- 29
2SF1115	NECJ	419- 30
2SF1116	NECJ	425- 62
2SF1117	NECJ	434- 80
2SF1118	NECJ	450- 76
2SF1119	NECJ	457-100
2SF1125	NECJ	428- 2
2SF1126	NECJ	437- 59
2SF1127	NECJ	445- 62
2SF1128	NECJ	453- 65
2SF1129	NECJ	466- 73
2SF1130	NECJ	476- 14
2SF1141	MITJ	428-108
2SF1142	MITJ	439- 21
2SF1143	MITJ	446-101
2SF1144	MITJ	455- 45
2SF1145	MITJ	461- 52
2SF1146	MITJ	469- 3
2SF1147	MITJ	477-109
2SF1148	MITJ	484- 55
2SF1149	MITJ	489- 39
2SF1150	MITJ	492- 46
2SF1151	MITJ	493- 87
2SF1152	MITJ	494- 54
2SM11	TOSJ	500- 7
2SM12	TOSJ	502- 15
2SM13	TOSJ	505- 92
2SM20	TOSJ	500- 12
2SM21	TOSJ	502- 36
2SM22	TOSJ	505- 97
2SM58	♦MATJ	502- 37
2SM63	MITJ	500- 13
2SM64	MITJ	502- 38
2SM65	MITJ	503- 9
2SM66	MITJ	505- 28
2SM67	MITJ	500- 14
2SM68	MITJ	502- 39
2SM69	MITJ	503- 10
2SM70	MITJ	505- 29
2SM71	MITJ	500- 15
2SM72	MITJ	502- 40
2SM73	MITJ	503- 11
2SM74	MITJ	505- 30
2SM75	♦MATJ	502- 16
2SM79	♦MATJ	501-109
2T501	ITT	299- 79
2T502	ITT	310- 44

△-Registered with JEDEC by this manufacturer

♦-Copy of mfr's data sheet may be ordered from D.A.T.A.

1. TYPE No. CROSS INDEX

IN TYPE NUMBER SEQUENCE

TYPE No.	MFRS	Pg&Line
2T503	ITT	320- 90
2T504	ITT	329- 4
2T505	ITT	339- 59
2T506	ITT	346- 55
2T507	ITT	355- 26
2T508	ITT	359- 69
2T509	ITT	367- 1
2T510	ITT	370- 10
2VR5 6,A,B	♦SAR	173-120
2VR6,A,B	SAR	174- 13
2VR6 2,A,B	♦SAR	175- 97
2VR6 8,A,B	♦SAR	178- 68
2VR7,A,B	SAR	178-183
2VR7 5,A,B	♦SAR	180-110
2VR8.2,A,B	♦SAR	182-163
2VR8 5,A,B	SAR	184- 1
2VR9 1,A,B	♦SAR	186- 93
2VR10,A,B	♦SAR	188-183
2VR11,A,B	♦SAR	190-166
2VR12,A,B	♦SAR	193- 76
2VR13,A,B	♦SAR	195-105
2VR14,A,B	SAR	196-106
2VR15,A,B	♦SAR	198- 78
2VR16,A,B	♦SAR	200- 53
2VR18,A,B	♦SAR	202-168
2VR20,A,B	♦SAR	205-108
2VR22,A,B	♦SAR	207- 93
2VR24,A,B	♦SAR	209- 71
2VR27,A,B	♦SAR	211-159
2VR28,A,B	SAR	212-121
2VR30,A,B	♦SAR	213-154
2VR33,A,B	♦SAR	215-123
2VR36,A,B	♦SAR	217- 19
2VR39,A,B	♦SAR	218-100
2VR43,A,B	♦SAR	219-177
2VR47,A,B	♦SAR	221-122
2VR51,A,B	♦SAR	223- 65
2VR56,A,B	♦SAR	224-152
2VR62,A,B	♦SAR	226- 96
2VR67,A,B	SAR	227- 10
2VR68,A,B	♦SAR	227-157
2VR75,A,B	♦SAR	229- 70
2VR80,A,B	SAR	229-191
2VR82,A,B	♦SAR	230-148
2VR90,A,B	SAR	231-121
2VR91,A,B	♦SAR	232- 82
2VR100,A,B	♦SAR	233-131
2VR105,A,B	SAR	234-117
2VR110,A,B	♦SAR	235- 90
2VR120,A,B	♦SAR	236-117
2VR130,A,B	♦SAR	237-149
2VR150,A,B	♦SAR	239-131
2VR160,A,B	♦SAR	240-149
2VR180,A,B	♦SAR	242- 94
2VR200,A,B	♦SAR	243-130
2WDCR7K603B35		470- 61
	♦AEIL	
2WDCR7K703B35		473- 62
	♦AEIL	
2WDCR7K803B35		479- 42
	♦AEIL	
2WDCR7K903B35		481- 96
	♦AEIL	
2WDCR7K1003B35		485- 79
	♦AEIL	
2WDCR7K1103B35		487- 60
	♦AEIL	
2WDCR7K1103B4	♦AEIL	485- 80
2WDCR7K1203B35		490- 48
	♦AEIL	
2WDCR7K1203B4	♦AEIL	485- 83
2WDCR7K1303B35		491- 89
	♦AEIL	
2WDCR7K1303B4	♦AEIL	487- 66
2WDCR7K1403B4	♦AEIL	490- 53
2WDCR7K1503B4	♦AEIL	491- 91
2WDCR152-603B		470- 52
	♦AEIL	
2WDCR152-703B		473- 59
	♦AEIL	
2WDCR152-803B		479- 34
	♦AEIL	
2WDCR152-903B		481- 90
	♦AEIL	
2WDCR152-1003B		485- 71
	♦AEIL	
2WDCR152-1103B		487- 53
	♦AEIL	
2WDCR152-1203B		490- 40
	♦AEIL	
2WDCR152-1303B		491- 84
	♦AEIL	
2WMT1	CDWF	304- 23
2WMT2	CDWF	315- 48
2WMT4	CDWF	334- 47
2WMT6	CDWF	351- 60
2WMT8	CDWF	363- 95
2WMT10	CDWF	373- 77
2WMT12	CDWF	379- 48
3A15	SOD	292- 25
3A30	SOD	292- 59
3A300	SOD	323- 39
3A500	SOD	341-107
3A3030	UNI	416- 80
3A3030A	UNI	416- 81
3A3060	UNI	422- 19
3A3060A	UNI	422- 20
3A3100	UNI	423- 85
3A3100A	UNI	423- 86
3A3150	UNI	430- 33
3A3150A	UNI	430- 23
3A3200	UNI	432- 76
3A3200A	UNI	432- 77
3AF2	SAR	313-100

TYPE No.	MFRS	Pg&Line
3AF4	SAR	323- 29
3AF6	SAR	349-108
3AF8	SAR	362- 62
3B30L05	TIID	250- 69
	TIIF	
3B30L10	TIID	254- 43
	TIIF	
3B30L20	TIID	257- 61
	TIIF	
3B30L40	TIID	259- 76
	TIIF	
3B30L60	TIID	260- 21
	TIIF	
3B30L80	TIID	260- 51
	TIIF	
3B30L100	TIID	260- 79
	TIIF	
3B30S	UNI	416-101
3B60L05	TIID	250- 71
	TIIF	
3B60L10	TIID	254- 45
	TIIF	
3B60L20	TIID	257- 63
	TIIF	
3B60L40	TIID	259- 78
	TIIF	
3B60L60	TIID	260- 23
	TIIF	
3B60L80	TIID	260- 53
	TIIF	
3B60S	UNI	422- 36
3B100S	UNI	424- 7
3B150S	UNI	430- 50
3B200S	UNI	432-110
3B1034	♦UNI	414- 55
3B3015	UNI	414- 62
3B3030	UNI	417- 9
3B3060	UNI	422- 46
3B3100	UNI	424- 64
3B3150	UNI	430- 72
3B3200	UNI	433- 70
3BR1	♦HSC	302-101
3BR2	♦HSC	314- 1
3BR4	♦HSC	332-102
3BR6	♦HSC	350- 9
3BR8	♦HSC	362- 72
3BR10	♦HSC	372- 82
3C1	CITF	305- 33
3C2	♦CITF	316- 75
3C4	♦CITF	335- 78
3C6	♦CITF	352- 67
3C8	♦CITF	364- 76
3C10	♦CITF	374- 44
3C12	♦CITF	379- 74
3C14	♦CITF	382- 63
3C15	AMD	307-107
	UNI	497- 15
3C15A	UNI	497- 16
3C16	♦CITF	386- 78
3C30	UNI	323- 59
		497- 21
3C30A	UNI	497- 22
3C60	UNI	350- 45
		497- 36
3C60A	UNI	497- 37
3C70	AMD	356- 68
3C80	AMD	362-101
3C90	AMD	367- 44
3C100△	AMD	372-106
3C100⊠	UNI	497- 52
3C100A	UNI	497- 53
3C200	UNI	497- 79
3C200A	UNI	497- 80
3C1030	UNI	497- 23
3C1030A	UNI	497- 24
3C1060	UNI	497- 38
3C1060A	UNI	497- 39
3C1100	UNI	497- 54
3C1100A	UNI	497- 55
3C1150	UNI	497- 67
3C1150A	UNI	497- 68
3C1200	UNI	497- 81
3C1200A	UNI	497- 82
3C6030	♦UNI	416- 66
3C6060	♦UNI	422- 7
3C6100	♦UNI	423- 68
3C6150	♦UNI	430- 28
3C6200	♦UNI	432- 63
3DD10	♦SCO	260- 68
3DD15	♦SCO	260-106
3DD20	♦SCO	261- 19
3DD25	♦SCO	261- 34
3DD30	♦SCO	261- 43
3DF10	♦SCO	288- 33
3DF12	♦SCO	288- 73
3DF15	♦SCO	288- 95
3DF20	♦SCO	289- 10
3DF25	♦SCO	289- 20
3DF30	♦SCO	289- 46
3E1	PWC	303- 13
3E2	PWC	314- 22
3E4	PWC	333- 15
3E05	PWC	295- 81
3E6	PWC	350- 33
3E8	PWC	362- 89
3E10	PWC	372- 96
3E12	PWC	379- 2
3E30-1	ITT	598- 32
3E30-2	ITT	598- 33
3F5	INRB	295- 80
3F10	INRB	303- 23
INRC	♦INRI	
	INRJ	
3F15	UNI	414- 29

TYPE No.	MFRS	Pg&Line
3F20	INRB	314- 32
INRC	♦INRI	
	INRJ	
3F30△	INRB	323- 51
INRC	INRI	
	INRJ	
3F30⊠	UNI	416- 54
3F40	INRB	333- 25
INRC	♦INRI	
	INRJ	
3F50	INRB	342- 8
INRC	INRI	
	INRJ	
3F60△	UNI	421- 99
3F60⊠	INRB	350- 43
INRC	♦INRI	
	INRJ	
3F80	INRB	362- 99
INRC	♦INRI	
	INRJ	
3F100△	UNI	423- 43
3F100⊠	INRB	372-104
INRC	♦INRI	
	INRJ	
3F120	INRB	378-110
3F150	UNI	430- 26
3F200	UNI	432- 46
3G8	AEIL	321- 36
3GC12	TOSJ	332-106
3GCRCX	SAR	497- 64
3GCRCY	SAR	497- 65
3GCRCZ	SAR	497- 66
3GCRDX	SAR	497- 73
3GCRDY	SAR	497- 74
3GCRDZ	SAR	497- 75
3GCREX	SAR	497- 90
3GCREY	SAR	497- 91
3GCREZ	SAR	497- 92
3GCRFX	SAR	497- 97
3GCRFY	SAR	497- 98
3GCRFZ	SAR	497- 99
3GCRGX	SAR	497-102
3GCRGY	SAR	497-103
3GCRGZ	SAR	497-104
3GCRHX	SAR	497-105
3GCRHY	SAR	497-106
3GCRHZ	SAR	497-107
3GCRIX	SAR	497-108
3GCRIY	SAR	497-109
3GCRIZ	SAR	497-110
3GCRJX	SAR	498- 1
3GCRJY	SAR	498- 2
3GCRJZ	SAR	498- 3
3J15	UNI	414- 35
3J30	UNI	416- 67
3J60	UNI	422- 8
3J100	UNI	423- 69
3JC12	TOSJ	350- 14
3K15	UNI	414- 36
3L1015	UNI	414- 26
3L1030	UNI	416- 47
3L1060	UNI	421- 92
3L1100	UNI	423- 36
3L2015	UNI	414- 33
3L2030	UNI	416- 60
3L2060	UNI	421-105
3L2100	UNI	423- 55
3LC12	TOSJ	362- 75
3N39	TEC	184- 89
3N42	TEC	184- 90
3N43	TEC	184- 91
3N44	TEC	184- 92
3N44A	TEC	184- 93
3N81	△GESY	498- 12
	SOIF	
JAN3N81	none	498- 10
3N82	△GESY	498- 19
	SOIF	
JAN3N82	none	498- 17
3N83	△GESY	498- 14
	SOIF	
3N84	△GESY	498- 8
	SOIF	
3N85	△GESY	498- 18
	SOIF	
3N86	△GESY	498- 13
JAN3N86	none	498- 11
3NC12	TOSJ	372- 86
3P15	UNI	498- 27
3P30	UNI	498- 36
3P60	UNI	498- 51
3P100	UNI	498- 56
3P150	UNI	498- 63
3P200	UNI	498- 70
3P1020	UNI	498- 23
3P1021	UNI	498- 32
3P1022	UNI	498- 47
3P1023	UNI	498- 52
3PT40	SOIF	497- 32
3PT60	SOIF	497- 44
3PT80	SOIF	497- 48
3PT100	SOIF	497- 60
3R7.5,A,B	SOD	180-118
3R8.2,A,B	SOD	182-171
3R9.1,A,B	SOD	186-101
3R10,A,B	SOD	188-191
3R11,A,B	SOD	190-179
3R12,A,B	SOD	193- 84
3R13,A,B	SOD	195-112
3R15,A,B	SOD	198- 85
3R16,A,B	SOD	200- 59
3R18,A,B	SOD	202-177
3R20,A,B	SOD	205-117
3R22,A,B	SOD	207-101

TYPE No.	MFRS	Pg&Line
3R24,A,B	SOD	209- 78
3R27,A,B	SOD	211-167
3R30,A,B	SOD	213-162
3R33,A,B	SOD	215-131
3R35,A,B	SOD	216- 54
3R36,A,B	SOD	217- 28
3R39,A,B	SOD	218-107
3R43,A,B	SOD	220- 1
3R47,A,B	SOD	221-129
3R51,A,B	SOD	223- 72
3R56,A,B	SOD	224-158
3R62,A,B	SOD	226-103
3R68,A,B	SOD	227-164
3R75,A,B	SOD	229- 77
3R82,A,B	SOD	230-154
3R91,A,B	SOD	232- 88
3R100,A,B	SOD	233-137
3R110,A,B	SOD	235- 94
3R120,A,B	SOD	236-124
3R130,A,B	SOD	237-155
3R140,A,B	SOD	238-131
3R150,A,B	SOD	239-137
3R160,A,B	SOD	240-153
3R175,A,B	SOD	241-137
3R180,A,B	SOD	242- 98
3R200,A,B	SOD	243-137
3RC2	INRB	414-105
INRC	INRI	
	INRJ	
3RC5	INRB	418- 85
INRC	INRI	
	INRJ	
3RC10	INRB	424-100
INRC	INRI	
	INRJ	
3RC10A	INRB	424-102
INRC	INRI	
	INRJ	
3RC15	INRB	430- 77
INRC	INRI	
	INRJ	
3RC20	INRB	434- 4
INRC	INRI	
	INRJ	
3RC20A	INRB	434- 6
INRC	INRI	
	INRJ	
3RC25	INRB	440- 96
INRC	INRI	
	INRJ	
3RC30	INRB	443- 19
INRC	INRI	
	INRJ	
3RC30A	INRB	443- 21
INRC	INRI	
	INRJ	
3RC40	INRB	450- 3
INRC	INRI	
	INRJ	
3RC40A	INRB	450- 5
INRC	INRI	
	INRJ	
3RC50	INRB	457- 56
INRC	INRI	
	INRJ	
3RC50A	INRB	457- 57
INRC	INRI	
	INRJ	
3RC60	INRB	463- 42
INRC	INRI	
	INRJ	
3RC60A	INRB	463- 43
INRC	INRI	
	INRJ	
3S1E	SET	303- 5
3S2E	SET	314- 14
3S4E	SET	333- 7
3S05E	SET	295- 74
3S6E	SET	350- 25
3SF11	♦MATJ	498- 15
3T6 2,A,B	SAR	175-104
3T7.5,A,B	SAR	180-132
3T9 1,A,B	SAR	186-115
3T11,A,B	SAR	191- 3
3T13,A,B	SAR	195-127
3T16,A,B	SAR	200- 73
3T20,A,B	SAR	205-132
3T24,A,B	SAR	209- 94
3T30,A,B	SAR	213-163
3T33,A,B	SAR	215-149
3T36,A,B	SAR	217- 44
3T39,A,B	SAR	218-120
3T43,A,B	SAR	220- 13
3T47,A,B	SAR	221-142
3T51,A,B	SAR	223- 84
3T56,A,B	SAR	224-174
3T62,A,B	SAR	226-115
3T68,A,B	SAR	227-177
3T75,A,B	SAR	229- 92
3T82,A,B	SAR	230-167
3T91,A,B	SAR	232-100
3T100,A,B	SAR	233-153
3T110,A,B	SAR	235-108
3T120,A,B	SAR	236-139
3T130,A,B	SAR	237-169
3T150,A,B	SAR	239-152
3T160,A,B	SAR	240-167
3T180,A,B	SAR	242-113
3T200,A,B	SAR	243-151
3T501	ITT	299- 80
3T502	ITT	310- 45
3T503	ITT	320- 91
3T504	ITT	329- 5
3T505	ITT	339- 60

TYPE No.	MFRS	Pg&Line
3T506	ITT	346- 56
3T507	ITT	355- 27
3T508	ITT	359- 70
3T509	ITT	367- 2
3T510	ITT	370- 11
3TCRA	SAR	414-103
3TCRB	SAR	418- 79
3TCRC	SAR	424- 93
3TCRD	SAR	430- 74
3TCRE	SAR	433-104
3TCRF	SAR	440- 98
3TCRG	SAR	443- 13
3TCRH	SAR	449-103
3TCRI	SAR	457- 53
3TZ3 6,A,B,D	PWC	168- 40
3TZ3 6C	PWC	168- 41
3TZ3.9,A,B,D	PWC	169- 3
3TZ3.9C	PWC	169- 4
3TZ4 3,A,B,D	PWC	170- 1
3TZ4.3C	PWC	170- 2
3TZ4.7,A,B,D	PWC	171- 10
3TZ4.7C	PWC	171- 11
3TZ5.1,A,B,D	PWC	172- 45
3TZ5 1C	PWC	172- 46
3TZ5.6,A,B,D	PWC	173-124
3TZ5.6C	PWC	173-125
3TZ6.2,A,B,D	PWC	175-101
3TZ6.2C	PWC	175-102
3TZ6.8,A,B,D	PWC	178- 75
3TZ6.8C	PWC	178- 76
3TZ7.5,A,B,D	PWC	180-119
3TZ7.5C	PWC	180-120
3TZ8.2,A,B,D	PWC	182-172
3TZ8.2C	PWC	182-173
3TZ9.1,A,B,D	PWC	186-102
3TZ9 1C	PWC	186-103
3TZ10,A,B,D	PWC	188-192
3TZ10C	PWC	188-193
3TZ11,A,B,D	PWC	190-180
3TZ11C	PWC	190-181
3TZ12,A,B,D	PWC	193- 85
3TZ12C	PWC	193- 86
3TZ13,A,B,D	PWC	195-113
3TZ13C	PWC	195-114
3TZ14,A,B,D	PWC	196-113
3TZ14C	PWC	196-114
3TZ15,A,B,D	PWC	198- 86
3TZ15C	PWC	198- 87
3TZ16,A,B,D	PWC	200- 60
3TZ16C	PWC	200- 61
3TZ17,A,B,D	PWC	201- 51
3TZ17C	PWC	201- 52
3TZ18,A,B,D	PWC	202-178
3TZ18C	PWC	202-179
3TZ19,A,B,D	PWC	204- 9
3TZ19C	PWC	204- 10
3TZ20,A,B,D	PWC	205-118
3TZ20C	PWC	205-119
3TZ22,A,B,D	PWC	207-102
3TZ22C	PWC	207-103
3TZ24,A,B,D	PWC	209- 79
3TZ24C	PWC	209- 80
3TZ27,A,B,D	PWC	211-168
3TZ27C	PWC	211-169
3TZ30,A,B,D	PWC	213-164
3TZ30C	PWC	213-165
3TZ33,A,B,D	PWC	215-132
3TZ33C	PWC	215-133
3TZ36,A,B,D	PWC	217- 29
3TZ36C	PWC	217- 30
3TZ39,A,B,D	PWC	218-108
3TZ39C	PWC	218-109
3TZ43,A,B,D	PWC	220- 2
3TZ43C	PWC	220- 3
3TZ45,A,B,D	PWC	220-111
3TZ45C	PWC	220-112
3TZ47,A,B,D	PWC	221-130
3TZ47C	PWC	221-131
3TZ50,A,B,D	PWC	222- 82
3TZ50C	PWC	222- 83
3TZ51,A,B,D	PWC	223- 73
3TZ51C	PWC	223- 74
3TZ52,A,B,D	PWC	223-173
3TZ52C	PWC	223-174
3TZ56,A,B,D	PWC	224-159
3TZ56C	PWC	224-160
3TZ62,A,B,D	PWC	226-104
3TZ62C	PWC	226-105
3TZ68,A,B,D	PWC	227-165
3TZ68C	PWC	227-166
3TZ75,A,B,D	PWC	229- 78
3TZ75C	PWC	229- 79
3TZ82,A,B,D	PWC	230-155
3TZ82C	PWC	230-156
3TZ91,A,B,D	PWC	232- 89
3TZ91C	PWC	232- 90
3TZ100,A,B,D	PWC	233-138
3TZ100C	PWC	233-139
3TZ105,A,B,D	PWC	234-119
3TZ105C	PWC	234-120
3TZ110,A,B,D	PWC	235- 95
3TZ110C	PWC	235- 96
3TZ120,A,B,D	PWC	236-125
3TZ120C	PWC	236-126
3TZ130,A,B,D	PWC	237-156
3TZ130C	PWC	237-157
3TZ140,A,B,D	PWC	238-132
3TZ140C	PWC	238-133
3TZ150,A,B,D	PWC	239-138
3TZ150C	PWC	239-139
3TZ160,A,B,D	PWC	240-154
3TZ160C	PWC	240-155
3TZ175,A,B,D	PWC	241-138
3TZ175C	PWC	241-139

△-Registered with JEDEC by this manufacturer

♦-Copy of mfr's data sheet may be ordered from D.A.T.A.

1. TYPE No. CROSS INDEX

IN TYPE NUMBER SEQUENCE

TYPE No.	MFRS	Pg&Line
3TZ180,A,B,D	PWC	242- 99
3TZ180C	PWC	242-100
3TZ200,A,B,D	PWC	243-138
3TZ200C	PWC	243-139
3TZ220,A,B,D	PWC	244- 52
3TZ220C	PWC	244- 53
3VR5.6,A,B	♦SAR	173-126
3VR6,A,B	SAR	174- 15
3VR6.2,A,B	♦SAR	175-103
3VR6.8,A,B	♦SAR	178- 77
3VR7.5,A,B	♦SAR	180-121
3VR8.2,A,B	♦SAR	182-174
3VR8.5,A,B	SAR	184- 2
3VR9.1,A,B	♦SAR	186-104
3VR10,A,B	♦SAR	188-194
3VR11,A,B	♦SAR	190-182
3VR12,A,B	♦SAR	193- 87
3VR13,A,B	♦SAR	195-115
3VR15,A,B	♦SAR	198- 88
3VR16,A,B	♦SAR	200- 62
3VR18,A,B	♦SAR	202-180
3VR20,A,B	♦SAR	205-120
3VR22,A,B	♦SAR	207-104
3VR24,A,B	♦SAR	209- 81
3VR27,A,B	♦SAR	211-170
3VR30,A,B	♦SAR	213-166
3VR33,A,B	♦SAR	215-134
3VR36,A,B	♦SAR	217- 31
3VR39,A,B	♦SAR	218-110
3VR43,A,B	♦SAR	220- 4
3VR47,A,B	♦SAR	221-132
3VR51,A,B	♦SAR	223- 75
3VR56,A,B	♦SAR	224-161
3VR62,A,B	♦SAR	226-106
3VR67,A,B	SAR	227- 11
3VR68,A,B	♦SAR	227-167
3VR75,A,B	♦SAR	229- 80
3VR82,A,B	♦SAR	230-157
3VR90,A,B	SAR	231-123
3VR91,A,B	♦SAR	232- 91
3VR100,A,B	♦SAR	233-140
3VR110,A,B	♦SAR	235- 97
3VR120,A,B	♦SAR	236-127
3VR130,A,B	♦SAR	237-158
3VR150,A,B	♦SAR	239-140
3VR160,A,B	♦SAR	240-156
3VR180,A,B	♦SAR	242-101
3VR200,A,B	♦SAR	243-140
3WM1	CDWF	304-106
3WM2	CDWF	316- 30
3WM4	CDWF	335- 37
3WM6	CDWF	352- 34
3WM8	CDWF	364- 59
3WM10	CDWF	374- 30
3WM12	CDWF	379- 70
3Z3.3T10,5	♦INRI	167- 80
3Z3.6T10,5	♦INRI	168- 42
3Z3 9T20,10,5	INRB	169- 6
INRC	INRI	
	INRJ	
3Z4 3T20,10,5	INRB	170- 3
INRC	INRI	
	INRJ	
3Z4.7T20,10,5	INRB	171- 13
INRC	INRI	
	INRJ	
3Z5 1T20,10,5	INRB	172- 47
INRC	INRI	
	INRJ	
3Z5 6T20,10,5	INRB	173-128
INRC	INRI	
	INRJ	
3Z6.2T20,10,5	INRB	175-105
INRC	INRI	
	INRJ	
3Z6 8,A,B	BNT	178- 78
3Z6 8T20,10,5	INRB	178- 90
INRC	INRI	
	INRJ	
3Z7 5T20,10,5	INRB	180-133
INRC	INRI	
	INRJ	
3Z8 2T20,10,5	INRB	182-186
INRC	INRI	
	INRJ	
3Z9 0,A,B	BNT	184-193
3Z9 1T20,10,5	INRB	186-116
INRC	INRI	
	INRJ	
3Z10T20,10,5	INRB	189- 13
INRC	INRI	
	INRJ	
3Z11T20,10,5	INRB	191- 4
INRC	INRI	
	INRJ	
3Z12,A,B	BNT	193- 88
3Z12T20,10,5	INRB	193-102
INRC	INRI	
	INRJ	
3Z13T20,10,5	INRB	195-128
INRC	INRI	
	INRJ	
3Z15,A,B	BNT	198- 89
3Z15T20,10,5	INRB	198-103
INRC	INRI	
	INRJ	
3Z16T20,10,5	INRB	200- 74
INRC	INRI	
	INRJ	
3Z18,A,B	BNT	202-181
3Z18T20,10,5	INRB	202-195
INRC	INRI	
	INRJ	

TYPE No.	MFRS	Pg&Line
3Z20T20,10,5	INRB	205-133
INRC	INRI	
	INRJ	
3Z21,A,B	BNT	206- 23
3Z22T20,10,5	INRB	207-118
INRC	INRI	
	INRJ	
3Z24,A,B	BNT	209- 82
3Z24T20,10,5	INRB	209- 95
INRC	INRI	
	INRJ	
3Z27,A,B	BNT	211-171
3Z27T20,10,5	INRB	211-185
INRC	INRI	
	INRJ	
3Z30,A,B	BNT	213-167
3Z30T20,10,5	INRB	213-179
INRC	INRI	
	INRJ	
3Z33,A,B	BNT	215-135
3Z33T10,5	♦INRI	215-136
3Z36,A,B	BNT	217- 32
4AF1	♦INRI	305- 7
4AF1LH	♦INRI	305- 16
4AF1LV	♦INRI	305- 8
4AF1PLH	INRI	305- 17
4AF1PLV	INRI	305- 18
4AF1PPF	INRI	305- 19
4AF1PPP	INRI	305- 20
4AF2	♦INRI	316- 44
4AF2LH	♦INRI	316- 58
4AF2LV	♦INRI	316- 45
4AF2PLH	INRI	316- 59
4AF2PLV	INRI	316- 60
4AF2PPF	INRI	316- 61
4AF2PPP	INRI	316- 62
4AF4	♦INRI	335- 48
4AF4LH	♦INRI	335- 61
4AF4LV	♦INRI	335- 49
4AF4PLH	INRI	335- 62
4AF4PLV	INRI	335- 63
4AF4PPF	INRI	335- 64
4AF4PPP	INRI	335- 65
4AF05	♦INRI	297- 13
4AF05LH	♦INRI	297- 21
4AF05LV	♦INRI	297- 14
4AF05PLH	INRI	297- 22
4AF05PLV	INRI	297- 23
4AF05PPF	INRI	297- 24
4AF05PPP	INRI	297- 25
4C1	CITF	305- 54
4C2	♦CITF	316- 99
4C4	♦CITF	335-109
4C6	♦CITF	352- 95
4C8	♦CITF	364-104
4C10	♦CITF	374- 63
4C12	♦CITF	379- 86
4C14	♦CITF	382- 69
4C16	♦CITF	386- 80
4D4	INRB	328- 67
INRC	INRI	
	INRJ	
4D6	INRB	346- 18
INRC	INRI	
	INRJ	
4E20-8	APD	496- 36
INTG	ITT	
4E20-28	APD	496- 37
INTG	ITT	
4E20A	ITT	496- 39
4E20M8	APD	496- 32
	ITT	
4E20M28	APD	496- 33
	ITT	
4E30-8	APD	496- 55
INTG	ITT	
4E30-28	APD	496- 56
INTG	ITT	
4E30A	ITT	496- 59
4E30M8	APD	496- 51
	ITT	
4E30M28	APD	496- 52
	ITT	
4E40-8	APD	496- 71
INTG	ITT	
4E40-28	APD	496- 72
INTG	ITT	
4E40A	ITT	496- 73
4E40M8	APD	496- 67
	ITT	
4E40M28	APD	496- 68
	ITT	
4E50-8	APD	496- 85
INTG	ITT	
4E50-28	APD	496- 86
INTG	ITT	
4E50A	ITT	496- 91
4E50M8	APD	496- 81
	ITT	
4E50M28	APD	496- 82
	ITT	
4E100-8	APD	496-102
INTG	ITT	
4E100-28	APD	496-103
INTG	ITT	
4E100M8	APD	496- 98
	ITT	
4E100M28	APD	496- 99
	ITT	
4E200-8	APD	497- 5
INTG	ITT	
4E200-28	APD	497- 6
INTG	ITT	

TYPE No.	MFRS	Pg&Line
4E200M8	APD	497- 3
	ITT	
4E200M28	APD	497- 4
	ITT	
4EX580	INTG	496- 38
4EX581	INTG	496- 58
4EX582	INTG	496- 43
4F1	PWC	303- 38
4F2	PWC	314- 48
4F3	PWC	323- 73
4F4	PWC	333- 40
4F05	PWC	295- 91
4F5	PWC	342- 26
4F6	PWC	350- 61
4F8	PWC	363- 1
4F10	PWC	373- 4
4F12	PWC	379- 11
4G8	AEIL	329- 92
4GZ10A	SOIF	189- 14
4GZ10B	SOIF	233-154
4GZ12A	SOIF	193-103
4GZ12B	SOIF	236-140
4GZ15A	SOIF	198-104
4GZ15B	SOIF	239-153
4GZ18A	SOIF	202-196
4GZ18B	SOIF	242-114
4GZ22A	SOIF	207-119
4GZ27A	SOIF	211-186
4GZ33A	SOIF	215-150
4GZ39A	SOIF	218-121
4GZ47A	SOIF	221-143
4GZ56A	SOIF	224-175
4GZ68A	SOIF	227-178
4GZ82A	SOIF	230-168
4J50-5	ITT	496- 87
4J50-25	ITT	496- 88
4J50M5	ITT	496- 89
4J50M25	ITT	496- 90
4J100-5	ITT	496-104
4J100-25	ITT	496-105
4J100M5	ITT	496-106
4J100M25	ITT	496-107
4J200-5	ITT	497- 7
4J200-25	ITT	497- 8
4J200M5	ITT	497- 9
4J200M25	ITT	497- 10
4JA27DR700	GESY	292- 3
4JA38DR700	GESY	292- 4
4JA70MR700	GESY	292- 5
4JA90MR700	GESY	292- 6
4JA211A	GELC	301- 66
4JFBD1	♦GESY	581- 29
4JFBD2	♦GESY	581- 30
4JFBD3	♦GESY	581- 31
4JFBD4	♦GESY	581- 32
4JFBD5	♦GESY	581- 33
4JFBD6	♦GESY	581- 34
4JFBD7	♦GESY	581- 35
4K30	UNI	416- 68
4K60	UNI	422- 9
4K100	UNI	423- 70
4L30	UNI	416- 69
4L60	UNI	422- 10
4L100	UNI	423- 71
4RCM5	INRB	419- 21
4RCM10	INRB	425- 48
4RCM20	INRB	434- 66
4RCM30	INRB	443- 59
4RCM40	INRB	450- 63
4RCM50	INRB	457- 98
4RCM60	INRB	463- 96
4T501	ITT	299- 81
4T502	ITT	310- 46
4T503	ITT	320- 92
4T504	ITT	329- 6
4T505	ITT	339- 61
4T506	ITT	346- 57
4T507	ITT	355- 28
4T508	ITT	359- 71
4T509	ITT	367- 3
4T510	ITT	370- 12
4TP001	ITT	497- 11
05RM80	♦ESMF	403- 80
	MISI	
05RM100	♦ESMF	405-100
	MISI	
05RM120	♦ESMF	407- 34
	MISI	
5A1	INRB	301- 15
INRC	INRI	
	INRJ	
5A2	INRB	312- 14
INRC	INRI	
	INRJ	
5A3	INRB	321-105
INRC	INRI	
	INRJ	
5A4	INRB	330-106
INRC	INRI	
	INRJ	
5A5	INRB	340- 80
INRC	INRI	
	INRJ	
5A6	INRB	348- 23
INRC	INRI	
	INRJ	
5A8	INRB	361- 3
INRC	INRI	
	INRJ	
5A10	INRB	371- 38
INRC	INRI	
	INRJ	
5A15	UNI	414- 30
5A30	UNI	416- 55

TYPE No.	MFRS	Pg&Line
5A60	UNI	421-100
5A100	UNI	423- 44
5AGD	SCN	165- 75
5BR1	♦HSC	303- 44
5BR2	♦HSC	314- 58
5BR4	♦HSC	333- 49
5BR6	♦HSC	350- 71
5BR8	♦HSC	363- 10
5BR10	♦HSC	373- 9
5D1	INRB	299-100
5D2	INRB	310- 69
5D4	INRB	329- 37
5D6	INRB	346- 75
5D8	INRB	359- 84
5D10∅	INRB	370- 25
5E1	♦INRI	299-105
5E2	♦INRI	310- 75
5F1	AMD	294-109
5F5	AMD	295-104
5G8	AEIL	340- 9
5J3P	SAR	296- 53
5JH3	SAR	297- 76
5K10	PPC	369- 18
5K20	PPC	389- 22
5K30	PPC	393- 59
		416- 56
5K40	PPC	396- 41
5K50	PPC	398- 90
5L15	EDL	383-103
5L20	EDL	389- 35
5L25	EDL	392- 16
5L30	EDL	393- 78
5L35	EDL	395- 52
5L40	EDL	396- 59
5L45	EDL	398- 5
5L50	EDL	399- 13
5L55	EDL	400- 37
5L60	EDL	400- 81
5L65	EDL	401- 82
5L70	EDL	402- 19
5L75	EDL	402- 91
5L80	EDL	403- 45
5L85	EDL	404- 26
5L90	EDL	404- 57
5L95	EDL	404-105
5L100	EDL	405- 54
5L110	EDL	406- 68
5L120	EDL	407- 7
5L130	EDL	407- 61
5L140	EDL	407- 84
5L150	EDL	408- 23
5L159	EDL	383-104
5L160	EDL	408- 99
5L170	EDL	409- 27
5L180	EDL	409- 45
5L190	EDL	409- 72
5L200	EDL	409-109
5L209	EDL	389- 36
5L210	EDL	410- 51
5L220	EDL	410- 65
5L230	EDL	410- 81
5L240	EDL	410- 94
5L250	EDL	411- 14
5L259	EDL	392- 17
5L260	EDL	411- 57
5L270	EDL	411- 71
5L280	EDL	411- 83
5L290	EDL	411- 97
5L300	EDL	412- 16
5L309	EDL	393- 79
5L359	EDL	395- 53
5L409	EDL	396- 60
5L459	EDL	398- 6
5L509	EDL	399- 14
5L559	EDL	400- 38
5L609	EDL	400- 82
5L659	EDL	401- 83
5L709	EDL	402- 20
5L759	EDL	402- 92
5L809	EDL	403- 46
5L859	EDL	404- 27
5L909	EDL	404- 58
5L959	EDL	404-106
5L1009	EDL	405- 55
5M10	♦INRJ	304- 63
5M15	♦INRJ	308- 24
5M20	♦INRJ	315- 95
5M30	♦INRJ	324- 76
5M40	♦INRJ	334-102
5M50	♦INRJ	343- 21
5M60	♦INRJ	351-107
5M80	♦INRJ	364- 33
5M100	♦INRJ	374- 6
5MA1	INRB	301- 16
INRC	INRI	
	INRJ	
5MA2	INRB	310- 74
INRC	INRI	
	INRJ	
5MA3	INRB	321-106
INRC	INRI	
	INRJ	
5MA4	INRB	329- 44
INRC	INRI	
	INRJ	
5MA5	INRB	339- 89
INRC	INRI	
	INRJ	
5MA6	INRB	346- 80
INRC	INRI	
	INRJ	
5MA8	INRB	359- 92
INRC	INRI	
	INRJ	

TYPE No.	MFRS	Pg&Line
5P15	UNI	498- 24
5P30	UNI	498- 33
5P60	UNI	498- 48
5P100	UNI	498- 53
5PM1	♦CITF	303- 45
5PM2	♦CITF	314- 59
5PM4	♦CITF	333- 51
5PM05	♦CITF	295- 99
5PM6	♦CITF	350- 72
5PM8	♦CITF	363- 12
5Q3	SAR	297- 6
5RC2	INRB	415- 20
INRC	INRI	
	INRJ	
5RC5	INRB	419- 43
INRC	INRI	
	INRJ	
5RC10	INRB	425- 74
INRC	INRI	
	INRJ	
5RC10A	INRB	425- 76
INRC	INRI	
	INRJ	
5RC15	INRB	430- 88
INRC	INRI	
	INRJ	
5RC20	INRB	434- 97
INRC	INRI	
	INRJ	
5RC20A	INRB	434- 99
INRC	INRI	
	INRJ	
5RC25	INRB	440-108
INRC	INRI	
	INRJ	
5RC30	INRB	443- 72
INRC	INRI	
	INRJ	
5RC30A	INRB	443- 74
INRC	INRI	
	INRJ	
5RC40	INRB	450- 93
INRC	INRI	
	INRJ	
5RC40A	INRB	450- 95
INRC	INRI	
	INRJ	
5RC50	INRB	457-110
INRC	INRI	
	INRJ	
5RC50A	INRB	458- 2
INRC	INRI	
	INRJ	
5RC60	INRB	464- 6
INRC	INRI	
	INRJ	
5RC60A	INRB	464- 8
INRC	INRI	
	INRJ	
5RC70	INRB	470- 99
5RCF5A	INRB	419- 44
INRC	INRI	
	INRJ	
5RCF10A	INRB	425- 75
INRC	INRI	
	INRJ	
5RCF15A	INRB	430- 89
INRC	INRI	
	INRJ	
5RCF20A	INRB	434- 98
INRC	INRI	
	INRJ	
5RCF25A	INRB	440-109
INRC	INRI	
	INRJ	
5RCF30A	INRB	443- 73
INRC	INRI	
	INRJ	
5RCF40A	INRB	450- 94
INRC	INRI	
	INRJ	
5RCF50A	INRB	458- 1
INRC	INRI	
	INRJ	
5RCF60A	INRB	464- 7
INRC	INRI	
	INRJ	
5S5	AMD	293- 38
5TC05	CITF	420- 71
5TC10	CITF	428- 4
5TC15	CITF	431- 21
5TC20	CITF	437- 77
5TC25	CITF	441- 45
5TC30	CITF	445- 86
5TC35	CITF	448- 34
5TC40	CITF	453- 83
5TC50	CITF	460- 17
5TC60	CITF	466- 95
5TC70	CITF	471- 93
5TC80	CITF	476- 28
5TC90	CITF	480- 29
5TC100	CITF	483- 14
5TC110	CITF	487- 59
5TC120	CITF	490- 50
5TCA10	CITF	427- 94
5TCA20	CITF	437- 25
5TCA30	CITF	445- 35
5TCA40	CITF	453- 24
5TCA50	CITF	459- 89
5TCA60	CITF	466- 32
5TCA70	CITF	471- 61
5TCA80	CITF	475- 88
5TCA90	CITF	479-106
5TCA100	CITF	482- 84

Δ-Registered with JEDEC by this manufacturer

♦-Copy of mfr's data sheet may be ordered from D.A.T.A.

1. TYPE No. CROSS INDEX

IN TYPE NUMBER SEQUENCE

TYPE No.	MFRS	Pg&Line
5TCA110	CITF	486- 4
5TCA120	CITF	487-107
5TCRA	SAR	415- 18
5TCRB	SAR	419- 33
5TCRC	SAR	425- 65
5TCRD	SAR	430- 85
5TCRE	SAR	434- 83
5TCRF	SAR	440-105
5TCRG	SAR	443- 64
5TCRH	SAR	450- 79
5TCRI	SAR	457-104
5ZS3 3,A,B	INRB	167- 84
♦INRC	INRI	
	INRJ	
5ZS3 6,A,B	INRB	168- 46
♦INRC	INRI	
	INRJ	
5ZS3 9,A,B	INRB	169- 10
♦INRC	INRI	
	INRJ	
5ZS4 3,A,B	INRB	170- 7
♦INRC	INRI	
	INRJ	
5ZS4 7,A,B	INRB	171- 17
♦INRC	INRI	
	INRJ	
5ZS5 1,A,B	INRB	172- 51
♦INRC	INRI	
	INRJ	
5ZS5 6,A,B	INRB	173-132
♦INRC	INRI	
	INRJ	
5ZS6 0,A,B	INRB	174- 19
♦INRC	INRI	
	INRJ	
5ZS6 2,A,B	INRB	175-109
♦INRC	INRI	
	INRJ	
5ZS6 8,A,B	INRB	178- 96
♦INRC	INRI	
	INRJ	
5ZS7.5,A,B	INRB	180-139
♦INRC	INRI	
	INRJ	
5ZS8 2,A,B	INRB	183- 7
♦INRC	INRI	
	INRJ	
5ZS8 7,A,B	INRB	184- 58
♦INRC	INRI	
	INRJ	
5ZS9 1,A,B	INRB	186-123
♦INRC	INRI	
	INRJ	
5ZS10,A,B	INRB	189- 21
♦INRC	INRI	
	INRJ	
5ZS11,A,B	INRB	191- 11
♦INRC	INRI	
	INRJ	
5ZS12,A,B	INRB	193-111
♦INRC	INRI	
	INRJ	
5ZS13,A,B	INRB	195-135
♦INRC	INRI	
	INRJ	
5ZS14,A,B	INRB	196-127
♦INRC	INRI	
	INRJ	
5ZS15,A,B	INRB	198-111
♦INRC	INRI	
	INRJ	
5ZS16,A,B	INRB	200- 81
♦INRC	INRI	
	INRJ	
5ZS17,A,B	INRB	201- 57
♦INRC	INRI	
	INRJ	
5ZS18,A,B	INRB	203- 3
♦INRC	INRI	
	INRJ	
5ZS19,A,B	INRB	204- 16
♦INRC	INRI	
	INRJ	
5ZS20,A,B	INRB	205-140
♦INRC	INRI	
	INRJ	
5ZS22,A,B	INRB	207-126
♦INRC	INRI	
	INRJ	
5ZS24,A,B	INRB	209-102
♦INRC	INRI	
	INRJ	
5ZS25,A,B	INRB	210- 62
♦INRC	INRI	
	INRJ	
5ZS27,A,B	INRB	211-193
♦INRC	INRI	
	INRJ	
5ZS28,A,B	INRB	212-126
♦INRC	INRI	
	INRJ	
5ZS30,A,B	INRB	214- 1
♦INRC	INRI	
	INRJ	
5ZS33,A,B	INRB	215-157
♦INRC	INRI	
	INRJ	
5ZS36,A,B	INRB	217- 51
♦INRC	INRI	
	INRJ	
5ZS39,A,B	INRB	218-128
♦INRC	INRI	
	INRJ	

TYPE No.	MFRS	Pg&Line
5ZS43,A,B	INRB	220- 20
♦INRC	INRI	
	INRJ	
5ZS47,A,B	INRB	221-150
♦INRC	INRI	
	INRJ	
5ZS51,A,B	INRB	223- 91
♦INRC	INRI	
	INRJ	
5ZS56,A,B	INRB	224-182
♦INRC	INRI	
	INRJ	
5ZS60,A,B	INRB	225-135
♦INRC	INRI	
	INRJ	
5ZS62,A,B	INRB	226-123
♦INRC	INRI	
	INRJ	
5ZS68,A,B	INRB	228- 3
♦INRC	INRI	
	INRJ	
5ZS75,A,B	INRB	229- 99
♦INRC	INRI	
	INRJ	
5ZS82,A,B	INRB	230-175
♦INRC	INRI	
	INRJ	
5ZS87,A,B	INRB	231-101
♦INRC	INRI	
	INRJ	
5ZS91,A,B	INRB	232-107
♦INRC	INRI	
	INRJ	
5ZS100,A,B	INRB	233-161
♦INRC	INRI	
	INRJ	
6A15	SOD	292- 26
6A30	SOD	292- 60
6A50	SOD	296- 2
6A100	SOD	303- 65
6A200	SOD	314- 80
6A300	SOD	323- 97
6A400	SOD	333- 71
6A500	SOD	342- 44
6A600	SOD	350- 86
6A700	SOD	356- 88
6A800	SOD	363- 41
6A900	SOD	367- 63
6A1000	SOD	373- 35
6A1200	SOD	379- 22
6C70	AMD	356- 89
6C80	AMD	363- 42
6C90	AMD	367- 64
6C100	AMD	373- 36
6F5	INRB	296- 7
INRC	♦INRI	
	INRJ	
6F10	INRB	303- 71
INRC	♦INRI	
	INRJ	
6F15	INRB	308- 6
INRC	INRI	
	INRJ	
6F20	INRB	314- 90
INRC	♦INRI	
	INRJ	
6F30	INRB	323-103
INRC	INRI	
	INRJ	
6F40	INRB	333- 83
INRC	♦INRI	
	INRJ	
6F50	INRB	342- 49
INRC	INRI	
	INRJ	
6F60	INRB	350- 97
INRC	♦INRI	
	INRJ	
6F70A	INRB	356- 90
INRC	INRI	
	INRJ	
6F70B	INRB	356- 91
INRC	INRI	
	INRJ	
6F80	INRB	363- 31
INRC	♦INRI	
	INRJ	
6F80A	INRB	363- 43
INRC	INRI	
	INRJ	
6F80B	INRB	363- 44
INRC	INRI	
	INRJ	
6F90A	INRB	367- 65
INRC	INRI	
	INRJ	
6F90B	INRB	367- 66
INRC	INRI	
	INRJ	
6F100	INRB	373- 26
INRC	♦INRI	
	INRJ	
6F100A	INRB	373- 37
INRC	♦INRI	
	INRJ	
6F100B	INRB	373- 38
INRC	♦INRI	
	INRJ	
6F120	INRB	379- 26
6FXF11	TOSJ	394- 88
6G8	AEIL	347- 13
6GC12	TOSJ	333- 79
6JC12	TOSJ	350- 92
6LC12	TOSJ	363- 28

TYPE No.	MFRS	Pg&Line
6NC12	TOSJ	373- 24
6RM36	♦ESMF	396- 3
	MISI	
6RM42	♦ESMF	397- 83
	MISI	
6RM48	♦ESMF	398- 71
	MISI	
6RM56	♦ESMF	400- 61
	MISI	
6RM64	♦ESMF	401- 77
	MISI	
6RM72	♦ESMF	402- 84
	MISI	
6RM80	♦ESMF	404- 12
	MISI	
6RS1DH4	GESY	246-104
6RS1DH6	GESY	246-105
6RS17DH4	GESY	246-102
6RS17DH6	GESY	246-103
6RS20PH6RGD1	GELC	309- 50
6RW71AY	GESY	421- 47
6RW71BY	GESY	429- 65
6RW71CY	GESY	431- 91
6RW71DY	GESY	440- 4
6RW71EY	GESY	441-109
6RW71FY	GESY	447- 75
6RW71GY	GESY	448- 49
6RW71HY	GESY	456- 37
6RW71KY	GESY	462- 28
6RW71MY	GESY	470- 16
6RW71PY	GESY	473- 36
6RW71RY	GESY	473- 37
6TC10	♦CITF	427-102
6TC20	♦CITF	437- 33
6TC30	♦CITF	445- 46
6TC40	♦CITF	453- 35
6TC50	♦CITF	459-100
6TC60	♦CITF	466- 43
6TC70	♦CITF	471- 68
6TC80	♦CITF	475- 95
6TC90	♦CITF	480- 5
6TC100	♦CITF	482- 91
6TC110	♦CITF	486- 12
6TC120	♦CITF	488- 6
6TCA10	CITF	427-108
6TCA20	CITF	437- 39
6TCA30	CITF	445- 58
6TCA40	CITF	453- 44
6TCA50	CITF	459-107
6TCA60	CITF	466- 53
6TCA70	CITF	471- 75
6TCA80	CITF	475-104
6TCA90	CITF	480- 14
6TCA100	CITF	482- 97
6TCA110	CITF	486- 17
6TCA120	CITF	488- 11
6TW1	CDWF	427- 18
6TW2	CDWF	436- 58
6TW3	CDWF	444- 83
6TW4	CDWF	452- 52
6TW5	CDWF	459- 24
6TW6	CDWF	465- 63
6WM1	CDWF	305- 52
6WM2	CDWF	316- 97
6WM4	CDWF	335-107
6WM6	CDWF	352- 93
6WM8	CDWF	364-102
6WM10	CDWF	374- 61
6WM12	CDWF	379- 85
6 2SR1	INRB	174-162
INRC	INRI	
	INRJ	
6 2SR1A	INRB	174-163
INRC	INRI	
	INRJ	
6 2SR2	INRB	174-164
INRC	INRI	
	INRJ	
6 2SR2A	INRB	174-165
INRC	INRI	
	INRJ	
6 2SR3	INRB	174-166
INRC	INRI	
	INRJ	
6 2SR3A	INRB	174-167
INRC	INRI	
	INRJ	
6 2SR4	INRB	174-168
INRC	INRI	
	INRJ	
6 2SR4A	INRB	174-169
INRC	INRI	
	INRJ	
7UV20	CLA	577- 7
8AN20	♦WESI	315- 51
8AN30	♦WESI	324- 47
8AN40	♦WESI	334- 51
8AN50	♦WESI	342- 99
8AN60	♦WESI	351- 64
8AN80	♦WESI	363- 99
8AN100	♦WESI	373- 81
8AN120	♦WESI	379- 49
8AN140	♦WESI	382- 56
8AN160	♦WESI	386- 68
8C1	CITF	305-103
8C2	♦CITF	317- 47
8C4	♦CITF	336- 70
8C6	♦CITF	353- 38
8C8	♦CITF	365- 51
8C10	♦CITF	374-101
8C12	♦CITF	380- 3
8C14	♦CITF	382- 86
8C16	♦CITF	386- 87

TYPE No.	MFRS	Pg&Line
8D4	INRB	330- 18
INRC	INRI	
	INRJ	
8D6	INRB	347- 45
INRC	INRI	
	INRJ	
8G7	AEIL	360- 8
8PT1	♦CITF	303- 96
8PT2	♦CITF	315- 6
8PT4	♦CITF	334- 5
8PT6	♦CITF	351- 20
8PT8	♦CITF	363- 66
8PT10	♦CITF	373- 53
8RCM5	INRB	419- 84
8RCM10	INRB	426- 60
8RCM20	INRB	435- 94
8RCM30	INRB	444- 34
8RCM40	INRB	451- 89
8RCM50	INRB	458- 74
8RCM60	INRB	464-105
8RCV5	INRB	419- 85
8RCV10	INRB	426- 61
8RCV20	INRB	435- 95
8RCV30	INRB	444- 35
8RCV40	INRB	451- 90
8RCV50	INRB	458- 75
8RCV60	INRB	464-106
8TW1	CDWF	427- 74
8TW2	CDWF	437- 5
8TW3	CDWF	445- 16
8TW4	CDWF	453- 4
8TW5	CDWF	459- 68
8TW6	CDWF	466- 10
10AS	AEIL	299- 67
10B1	INRB	302- 28
INRC	♦INRI	
	INRJ	
10B2	INRB	313- 29
INRC	♦INRI	
	INRJ	
10B3	INRB	322- 90
INRC	♦INRI	
	INRJ	
10B4	INRB	332- 16
INRC	♦INRI	
	INRJ	
10B5	INRB	341- 52
INRC	♦INRI	
	INRJ	
10B6	INRB	349- 36
INRC	♦INRI	
	INRJ	
10B8	INRB	361-102
INRC	♦INRI	
	INRJ	
10B10	INRB	372- 19
INRC	♦INRI	
	INRJ	
10C1△	INRB	300-100
INRC	INRI	
	INRJ	
10C1⊘	CITF	305-108
10C2△	INRB	311- 88
INRC	INRI	
	INRJ	
10C2⊘	♦CITF	317- 53
10C3	INRB	321- 87
INRC	INRI	
	INRJ	
10C4△	INRB	330- 70
INRC	INRI	
	INRJ	
10C4⊘	♦CITF	336- 78
10C5	INRB	340- 62
INRC	INRI	
	INRJ	
10C6△	INRB	347- 97
INRC	INRI	
	INRJ	
10C6⊘	♦CITF	353- 42
10C8△	INRB	360- 80
INRC	INRI	
	INRJ	
10C8⊘	♦CITF	365- 54
10C10△	INRB	371- 8
INRC	INRI	
	INRJ	
10C10⊘	♦CITF	374-105
10C12	♦CITF	380- 6
10C14	♦CITF	382- 90
10C16	♦CITF	386- 91
10D1	INRB	301- 17
INRC	INRI	
	INRJ	
10D2	INRB	312- 15
INRC	INRI	
	INRJ	
10D3	INRB	321-107
INRC	INRI	
	INRJ	
10D4	INRB	330-107
INRC	INRI	
	INRJ	
10D5	INRB	340- 81
INRC	INRI	
	INRJ	
10D6	INRB	348- 24
INRC	INRI	
	INRJ	
10D8	INRB	361- 4
INRC	INRI	
	INRJ	
10D10	INRB	371- 39
cont.next col		

TYPE No.	MFRS	Pg&Line
10D10		
(cont)	INRC	
INRI	INRJ	
10F5	AMD	303- 53
10F20	♦SCO	289- 1
10F30	♦SCO	289- 31
10F40	♦SCO	289- 55
10F50	♦SCO	289- 80
10G4	AEIL	369- 84
10J3P	SAR	304- 28
10JH3	SAR	305- 97
10L15	EDL	384- 3
10L20	EDL	389- 46
10L25	EDL	392- 20
10L30	EDL	393- 96
10L35	EDL	395- 54
10L40	EDL	396- 79
10L45	EDL	398- 7
10L50	EDL	399- 29
10L55	EDL	400- 39
10L60	EDL	400- 99
10L65	EDL	401- 84
10L70	EDL	402- 24
10L75	EDL	402- 94
10L80	EDL	403- 61
10L85	EDL	404- 28
10L90	EDL	404- 64
10L95	EDL	404-107
10L100	EDL	405- 70
10L110	EDL	406- 70
10L120	EDL	407- 19
10L130	EDL	407- 63
10L140	EDL	407- 93
10L150	EDL	408- 33
10L159	EDL	384- 4
10L160	EDL	408-106
10L170	EDL	409- 28
10L180	EDL	409- 52
10L190	EDL	409- 73
10L200	EDL	410- 10
10L209	EDL	389- 47
10L210	EDL	410- 53
10L220	EDL	410- 68
10L230	EDL	410- 82
10L240	EDL	410- 96
10L250	EDL	411- 21
10L259	EDL	392- 21
10L260	EDL	411- 59
10L270	EDL	411- 72
10L280	EDL	411- 85
10L290	EDL	411- 98
10L300	EDL	412- 22
10L309	EDL	393- 97
10L359	EDL	395- 55
10L409	EDL	396- 80
10L459	EDL	398- 8
10L509	EDL	399- 30
10L559	EDL	400- 40
10L609	EDL	400-100
10L659	EDL	401- 85
10L709	EDL	402- 25
10L759	EDL	402- 95
10L809	EDL	403- 62
10L859	EDL	404- 29
10L909	EDL	404- 65
10L959	EDL	404-108
10L1009	EDL	405- 71
10M10	♦INRJ	305- 53
10M15	♦INRJ	308- 53
10M17Z,10,5	MOTA	201- 68
10M20	♦INRJ	316- 98
10M25Z,10,5	MOTA	210- 72
10M30	♦INRJ	325- 34
10M40	♦INRJ	335-108
10M50	♦INRJ	343- 80
10M60	♦INRJ	352- 94
10M80	♦INRJ	364-103
10M100	♦INRJ	374- 62
10PM1	♦CITF	304- 4
10PM2	♦CITF	315- 26
10PM4	♦CITF	334- 26
10PM6	♦CITF	351- 38
10PM8	♦CITF	363- 81
10PM10	♦CITF	373- 64
10PZ6.8,A,B,D	PWC	178-129
10PZ6 8C	PWC	178-130
10PZ7.5,A,B,D	PWC	180-173
10PZ7.5C	PWC	180-174
10PZ8.2,A,B,D	PWC	183- 41
10PZ8.2C	PWC	183- 42
10PZ9.1,A,B,D	PWC	186-153
10PZ9 1C	PWC	186-154
10PZ10,A,B,D	PWC	189- 60
10PZ10C	PWC	189- 61
10PZ11,A,B,D	PWC	191- 37
10PZ11C	PWC	191- 38
10PZ12,A,B,D	PWC	193-151
10PZ12C	PWC	193-152
10PZ13,A,B,D	PWC	195-170
10PZ13C	PWC	195-171
10PZ14,A,B,D	PWC	196-146
10PZ14C	PWC	196-147
10PZ15,A,B,D	PWC	198-154
10PZ15C	PWC	198-155
10PZ16,A,B,D	PWC	200-111
10PZ16C	PWC	200-112
10PZ18,A,B,D	PWC	203- 46
10PZ18C	PWC	203- 47
10PZ20,A,B,D	PWC	205-179
10PZ20C	PWC	205-180
10PZ22,A,B,D	PWC	207-169
10PZ22C	PWC	207-170
10PZ24,A,B,D	PWC	209-139
10PZ24C	PWC	209-140

△-Registered with JEDEC by this manufacturer

♦-Copy of mfr's data sheet may be ordered from D.A.T.A.

1. TYPE No. CROSS INDEX

IN TYPE NUMBER SEQUENCE

TYPE No.	MFRS	Pg&Line
10PZ27,A,B,D	PWC	212- 39
10PZ27C	PWC	212- 40
10PZ30,A,B,D	PWC	214- 38
10PZ30C	PWC	214- 39
10PZ33,A,B,D	PWC	215-197
10PZ33C	PWC	215-198
10PZ36,A,B,D	PWC	217- 87
10PZ36C	PWC	217- 88
10PZ39,A,B,D	PWC	218-159
10PZ39C	PWC	218-160
10PZ43,A,B,D	PWC	220- 48
10PZ43C	PWC	220- 49
10PZ47,A,B,D	PWC	221-182
10PZ47C	PWC	221-183
10PZ51,A,B,D	PWC	223-118
10PZ51C	PWC	223-119
10PZ56,A,B,D	PWC	225- 39
10PZ56C	PWC	225- 40
10PZ62,A,B,D	PWC	226-151
10PZ62C	PWC	226-152
10PZ68,A,B,D	PWC	228- 36
10PZ68C	PWC	228- 37
10PZ75,A,B,D	PWC	229-135
10PZ75C	PWC	229-136
10PZ82,A,B,D	PWC	231- 25
10PZ82C	PWC	231- 26
10PZ91,A,B,D	PWC	232-135
10PZ91C	PWC	232-136
10PZ100,A,B,D	PWC	234- 27
10PZ100C	PWC	234- 28
10PZ110,A,B,D	PWC	235-147
10PZ110C	PWC	235-148
10PZ120,A,B,D	PWC	237- 11
10PZ120C	PWC	237- 12
10PZ130,A,B,D	PWC	238- 38
10PZ130C	PWC	238- 39
10PZ150,A,B,D	PWC	240- 25
10PZ150C	PWC	240- 26
10PZ160,A,B,D	PWC	241- 30
10PZ160C	PWC	241- 31
10PZ180,A,B,D	PWC	242-148
10PZ180C	PWC	242-149
10PZ200,A,B,D	PWC	244- 10
10PZ200C	PWC	244- 11
10PZ220,A,B,D	PWC	244- 69
10PZ220C	PWC	244- 70
10Q3	SAR	304- 65
10R1B	EDL	298- 98
10R2B	EDL	309- 59
10R3B	EDL	320- 27
10R4B	EDL	328- 16
10R5B	EDL	338- 99
10R6B	EDL	345- 77
10R7B	EDL	355- 3
10R8B	EDL	358-107
10R9B	EDL	366-103
10R10B	EDL	369- 34
10R11B	EDL	376- 27
10R12B	EDL	377- 53
10R13B	EDL	381- 29
10R14B	EDL	382- 4
10R15B	EDL	384- 5
10R16B	EDL	385- 93
10R18B	EDL	388- 4
10R20B	EDL	389- 48
10R22B	EDL	391- 14
10R24B	EDL	391- 67
10R26B	EDL	392- 93
10R28B	EDL	393- 15
10R30B	EDL	393- 98
10R32B	EDL	395- 8
10R34B	EDL	395- 31
10R36B	EDL	395- 96
10R38B	EDL	396- 23
10R40B	EDL	396- 81
10R42B	EDL	397- 76
10R44B	EDL	397- 96
10R46B	EDL	398- 41
10R48B	EDL	398- 59
10R50B	EDL	399- 31
10RC2	INRB	415- 38
INRC	INRI	
	INRJ	
10RC5	INRB	419-109
INRC	INRI	
	INRJ	
10RC10	INRB	426- 92
INRC	INRI	
	INRJ	
10RC10A	INRB	427- 49
INRC	INRI	
	INRJ	
10RC15	INRB	430-101
INRC	INRI	
	INRJ	
10RC20	INRB	436- 20
INRC	INRI	
	INRJ	
10RC20A	INRB	436- 89
INRC	INRI	
	INRJ	
10RC25	INRB	441- 12
INRC	INRI	
	INRJ	
10RC30	INRB	444- 51
INRC	INRI	
	INRJ	
10RC30A	INRB	444-104
INRC	INRI	
	INRJ	
10RC40	INRB	452- 12
INRC	INRI	
	INRJ	

TYPE No.	MFRS	Pg&Line
10RC40A	INRB	452- 85
INRC	INRI	
	INRJ	
10RC50	INRB	458- 95
INRC	INRI	
	INRJ	
10RC50A	INRB	459- 46
INRC	INRI	
	INRJ	
10RC60	INRB	464- 49
INRC	INRI	
	INRJ	
10RC60A	INRB	465- 97
INRC	INRI	
	INRJ	
10RC70	INRB	471- 2
INRC	INRI	
	INRJ	
10RC70A	INRB	471- 37
INRC	INRI	
	INRJ	
10RC80	INRB	474- 76
INRC	INRI	
	INRJ	
10RC80A	INRB	475- 58
INRC	INRI	
	INRJ	
10RC90	INRB	479- 69
INRC	INRI	
	INRJ	
10RC90A	INRB	479- 90
INRC	INRI	
	INRJ	
10RC100	INRB	482- 23
INRC	INRI	
	INRJ	
10RC100A	INRB	482- 61
INRC	INRI	
	INRJ	
10RC120A	INRB	487- 93
INRC	INRI	
	INRJ	
10RCF2A	INRB	415- 58
INRC	INRI	
	INRJ	
10RCF5A	INRB	420- 37
INRC	INRI	
	INRJ	
10RCF10A	INRB	427- 50
INRC	INRI	
	INRJ	
10RCF15A	INRB	431- 2
INRC	INRI	
	INRJ	
10RCF20A	INRB	436- 90
INRC	INRI	
	INRJ	
10RCF25A	INRB	441- 22
INRC	INRI	
	INRJ	
10RCF30A	INRB	444-105
INRC	INRI	
	INRJ	
10RCF40A	INRB	452- 86
INRC	INRI	
	INRJ	
10RCF50A	INRB	459- 47
INRC	INRI	
	INRJ	
10RCF60A	INRB	465- 98
INRC	INRI	
	INRJ	
10RCF70A	INRB	471- 38
INRC	INRI	
	INRJ	
10RCF80A	INRB	475- 59
INRC	INRI	
	INRJ	
10RCV5	INRB	417- 94
10RCV10	INRB	422-106
10RCV20	INRB	432- 2
10RCV30	INRB	442- 8
10RCV40	INRB	448- 79
10RCV50	INRB	457- 17
10RCV60	INRB	462- 84
10RZ6 8,A,B,D	PWC	178-131
10RZ6 8C	PWC	178-132
10RZ7 5,A,B,D	PWC	180-175
10RZ7 5C	PWC	180-176
10RZ8.2,A,B,D	PWC	183- 43
10RZ8 2C	PWC	183- 44
10RZ9 1,A,B,D	PWC	186-155
10RZ9 1C	PWC	186-156
10RZ10,A,B,D	PWC	189- 62
10RZ10C	PWC	189- 63
10RZ11,A,B,D	PWC	191- 39
10RZ11C	PWC	191- 40
10RZ12,A,B,D	PWC	193-153
10RZ12C	PWC	193-154
10RZ13,A,B,D	PWC	195-172
10RZ13C	PWC	195-173
10RZ15,A,B,D	PWC	198-156
10RZ15C	PWC	198-157
10RZ16,A,B,D	PWC	200-113
10RZ16C	PWC	200-114
10RZ18,A,B,D	PWC	203- 48
10RZ18C	PWC	203- 49
10RZ20,A,B,D	PWC	205-181
10RZ20C	PWC	205-182
10RZ22,A,B,D	PWC	207-171
10RZ22C	PWC	207-172
10RZ24,A,B,D	PWC	209-141
10RZ24C	PWC	209-142
10RZ27,A,B,D	PWC	212- 41

TYPE No.	MFRS	Pg&Line
10RZ27C	PWC	212- 42
10RZ30,A,B,D	PWC	214- 40
10RZ30C	PWC	214- 41
10RZ33,A,B,D	PWC	215-199
10RZ33C	PWC	215-200
10RZ36,A,B,D	PWC	217- 89
10RZ36C	PWC	217- 90
10RZ39,A,B,D	PWC	218-161
10RZ39C	PWC	218-162
10RZ43,A,B,D	PWC	220- 50
10RZ43C	PWC	220- 51
10RZ47,A,B,D	PWC	221-184
10RZ47C	PWC	221-185
10RZ51,A,B,D	PWC	223-120
10RZ51C	PWC	223-121
10RZ56,A,B,D	PWC	225- 41
10RZ56C	PWC	225- 42
10RZ62,A,B,D	PWC	226-153
10RZ62C	PWC	226-154
10RZ68,A,B,D	PWC	228- 38
10RZ68C	PWC	228- 39
10RZ75,A,B,D	PWC	229-137
10RZ75C	PWC	229-138
10RZ82,A,B,D	PWC	231- 27
10RZ82C	PWC	231- 28
10RZ91,A,B,D	PWC	232-137
10RZ91C	PWC	232-138
10RZ100,A,B,D	PWC	234- 29
10RZ100C	PWC	234- 30
10RZ110,A,B,D	PWC	235-149
10RZ110C	PWC	235-150
10RZ120,A,B,D	PWC	237- 13
10RZ120C	PWC	237- 14
10RZ130,A,B,D	PWC	238- 40
10RZ130C	PWC	238- 41
10RZ150,A,B,D	PWC	240- 27
10RZ150C	PWC	240- 28
10RZ160,A,B,D	PWC	241- 32
10RZ160C	PWC	241- 33
10RZ180,A,B,D	PWC	242-150
10RZ180C	PWC	242-151
10RZ200,A,B,D	PWC	244- 12
10RZ200C	PWC	244- 13
10RZ220,A,B,D	PWC	244- 71
10RZ220C	PWC	244- 72
10S20	♦SCO	389- 26
10S30	♦SCO	393- 64
10S40	♦SCO	396- 46
10S50	♦SCO	398-101
10T4	♦ESMF	414- 84
	MISI	
10TC05	CITF	420-102
10TC10	CITF	428- 86
10TC15	CITF	431- 70
10TC20	CITF	438- 84
10TC25	CITF	441- 91
10TC30	CITF	446- 74
10TC35	CITF	448- 42
10TC40	CITF	454-107
10TC50	CITF	460- 88
10TC60	CITF	468- 59
10TC70	CITF	472- 72
10TC80	CITF	477- 59
10TC90	CITF	481- 1
10TC100	CITF	484- 19
10TC110	CITF	486- 38
10TC120	CITF	488- 52
10TCA10	CITF	428- 31
10TCA20	CITF	437-108
10TCA30	CITF	445-109
10TCA40	CITF	454- 11
10TCA50	CITF	460- 42
10TCA60	CITF	467- 33
10TCA70	CITF	472- 3
10TCA80	CITF	476- 64
10TCA90	CITF	480- 48
10TCA100	CITF	483- 41
10TCA110	CITF	486- 39
10TCA120	CITF	488- 53
10WM1	CDWF	305- 99
10WM2	CDWF	317- 42
10WM4	CDWF	336- 63
10WM6	CDWF	353- 33
10WM8	CDWF	365- 44
10WM10	CDWF	374- 96
10Z3 3T10,5	INRI	167- 86
10Z3 6T10,5	INRI	168- 48
10Z3 9T20,10,5		169- 15
INRB	INRC	
INRI	INRJ	
10Z4 3T20,10,5		170- 11
INRB	INRC	
INRI	INRJ	
10Z4 7T20,10,5		171- 23
INRB	INRC	
INRI	INRJ	
10Z5 1T20,10,5		172- 55
INRB	INRC	
INRI	INRJ	
10Z5 6T20,10,5		173-140
INRB	INRC	
INRI	INRJ	
10Z6 2T20,10,5		175-118
INRB	INRC	
INRI	INRJ	
10Z6 8T20,10,5		178-133
INRB	INRC	
INRI	INRJ	
10Z7.5T20,10,5		180-177
INRB	INRC	
INRI	INRJ	
10Z8 2T20,10,5		183- 45
INRB	INRC	
INRI	INRJ	

TYPE No.	MFRS	Pg&Line
10Z9 1T20,10,5		186-157
INRB	INRC	
INRI	INRJ	
10Z10T20,10,5	INRB	189- 64
INRC	INRI	
	INRJ	
10Z11T20,10,5	INRB	191- 41
INRC	INRI	
	INRJ	
10Z12T20,10,5	INRB	193-155
INRC	INRI	
	INRJ	
10Z13T20,10,5	INRB	195-174
INRC	INRI	
	INRJ	
10Z15T20,10,5	INRB	198-158
INRC	INRI	
	INRJ	
10Z16T20,10,5	INRB	200-115
INRC	INRI	
	INRJ	
10Z18T20,10,5	INRB	203- 50
INRC	INRI	
	INRJ	
10Z20T20,10,5	INRB	205-183
INRC	INRI	
	INRJ	
10Z22T20,10,5	INRB	207-173
INRC	INRI	
	INRJ	
10Z24T20,10,5	INRB	209-143
INRC	INRI	
	INRJ	
10Z27T20,10,5	INRB	212- 43
INRC	INRI	
	INRJ	
10Z30T20,10,5	INRB	214- 42
INRC	INRI	
	INRJ	
10Z33T10,5	♦INRI	215-201
11RC10	♦INRJ	426-106
11RC20	♦INRJ	436- 34
11RC30	♦INRJ	444- 65
11RC40	♦INRJ	452- 26
11RC50	♦INRJ	458-107
11RC60	♦INRJ	465- 37
11RC80	♦INRJ	475- 14
11RC100	♦INRJ	482- 43
11T4	♦ESMF	418- 21
	MISI	
11Z6F,AF	♦ESMF	167- 52
	MISI	
12A700	SOD	357- 11
12A800	SOD	364- 6
12A900	SOD	367- 90
12A1000	SOD	373- 97
12C70	AMD	357- 12
12C80	AMD	364- 7
12C90	AMD	367- 91
12C100	AMD	373- 98
12CF11	TOSJ	363-107
12F5	INRB	292- 27
INRC	♦INRI	
	INRJ	
12F10	INRB	304- 29
INRC	♦INRI	
	INRJ	
12F15	INRB	308- 23
INRC	INRI	
	INRJ	
12F20	INRB	315- 55
INRC	♦INRI	
	INRJ	
12F30	INRB	324- 69
INRC	INRI	
	INRJ	
12F40	INRB	334- 54
INRC	♦INRI	
	INRJ	
12F50	INRB	343- 17
INRC	INRI	
	INRJ	
12F60	INRB	351- 67
INRC	♦INRI	
	INRJ	
12F80	INRB	363-101
INRC	♦INRI	
	INRJ	
12F80B	INRB	364- 8
INRC	INRI	
	INRJ	
12F100	INRB	373- 83
INRC	♦INRI	
	INRJ	
12F100B	INRB	373- 99
INRC	INRI	
	INRJ	
12FXF11	TOSJ	394- 92
12G4	AEIL	377- 73
12GC11	TOSJ	334- 49
12JC11	TOSJ	351- 62
12LC11	TOSJ	363- 97
12LF11	TOSJ	363-108
12NC11	TOSJ	373- 80
12NF11	TOSJ	373- 89
12P2	♦ESMF	256-105
	MISI	
12QF11	TOSJ	379- 55
12RCM5	INRB	420- 19
12RCM10	INRB	427- 7
12RCM20	INRB	436- 46
12RCM30	INRB	444- 76
12RCM40	INRB	452- 38
12RCM50	INRB	459- 7

TYPE No.	MFRS	Pg&Line
12RCM60	INRB	465- 46
12T4	♦ESMF	424- 22
	MISI	
12TC10	♦CITF	428- 34
12TC20	♦CITF	438- 3
12TC30	♦CITF	446- 5
12TC40	♦CITF	454- 17
12TC50	♦CITF	460- 49
12TC60	♦CITF	467- 39
12TC70	♦CITF	472- 9
12TC80	♦CITF	476- 70
12TC90	♦CITF	480- 55
12TC100	♦CITF	483- 46
12TC110	♦CITF	486- 46
12TC120	♦CITF	488- 58
12TCA10	CITF	428- 45
12TCA20	CITF	438- 16
12TCA30	CITF	446- 23
12TCA40	CITF	454- 35
12TCA50	CITF	460- 67
12TCA60	CITF	467- 62
12TCA70	CITF	472- 21
12TCA80	CITF	476- 88
12TCA90	CITF	480- 62
12TCA100	CITF	483- 58
12TCA110	CITF	486- 55
12TCA120	CITF	488- 68
12Z6F,AF	♦ESMF	168- 10
	MISI	
13P2	♦ESMF	256- 93
	MISI	
13T4	♦ESMF	430- 57
	MISI	
13Z6F,AF	♦ESMF	168-160
	MISI	
14P2	♦ESMF	255- 61
	MISI	
14T4	♦ESMF	433- 23
	MISI	
14Z6F,AF	♦ESMF	169-159
	MISI	
15AGD	SCN	165- 76
15AN20	♦WESI	316- 79
15AN30	♦WESI	325- 22
15AN40	♦WESI	335- 82
15AN50	♦WESI	343- 69
15AN60	♦WESI	352- 71
15AN80	♦WESI	364- 81
15AN100	♦WESI	374- 48
15AN120	♦WESI	379- 77
15AN140	♦WESI	382- 64
15AN160	♦WESI	386- 79
15C1	CITF	306- 18
15C2	♦CITF	317- 77
15C4	♦CITF	336-106
15C6	♦CITF	353- 69
15C8	♦CITF	365- 78
15C10	♦CITF	375- 16
15C12	♦CITF	380- 24
15C14	♦CITF	382- 98
15C16	♦CITF	386-100
15GS1	♦ERI	304- 62
15GS2	♦ERI	315- 94
15GS4	♦ERI	334-101
15GS6	♦ERI	351-106
15GS8	♦ERI	364- 32
15GS10	♦ERI	374- 5
15GS12	♦ERI	379- 58
15L15	EDL	384- 16
15L20	EDL	389- 62
15L25	EDL	392- 26
15L30	EDL	393-109
15L35	EDL	395- 57
15L40	EDL	396- 91
15L45	EDL	398- 9
15L50	EDL	399- 41
15L55	EDL	400- 41
15L60	EDL	400-109
15L65	EDL	401- 86
15L70	EDL	402- 30
15L75	EDL	402-101
15L80	EDL	403- 66
15L85	EDL	404- 30
15L90	EDL	404- 69
15L95	EDL	404-109
15L100	EDL	405- 81
15L110	EDL	406- 72
15L120	EDL	407- 24
15L130	EDL	407- 65
15L140	EDL	407- 97
15L150	EDL	408- 41
15L159	EDL	384- 17
15L160	EDL	409- 2
15L170	EDL	409- 29
15L180	EDL	409- 56
15L190	EDL	409- 74
15L200	EDL	410- 14
15L209	EDL	389- 63
15L210	EDL	410- 54
15L220	EDL	410- 69
15L230	EDL	410- 83
15L240	EDL	410- 97
15L250	EDL	411- 24
15L259	EDL	392- 27
15L260	EDL	411- 60
15L270	EDL	411- 73
15L280	EDL	411- 86
15L290	EDL	411- 99
15L300	EDL	412- 25
15L309	EDL	393-110
15L359	EDL	395- 58
15L409	EDL	396- 92
15L459	EDL	398- 10
15L509	EDL	399- 42

Δ-Registered with JEDEC by this manufacturer

♦-Copy of mfr's data sheet may be ordered from D.A.T.A.

1. TYPE No. CROSS INDEX

IN TYPE NUMBER SEQUENCE

TYPE No.	MFRS	Pg&Line
15L559	EDL	400- 42
15L609	EDL	401- 1
15L659	EDL	401- 87
15L709	EDL	402- 31
15L759	EDL	402-102
15L809	EDL	403- 67
15L859	EDL	404- 31
15L909	EDL	404- 70
15L959	EDL	405- 1
15L1009	EDL	405- 82
15N25A9	EDL	392- 28
15N25A	EDL	392- 29
15P1	♦ESMF	279- 29
	MISI	
15P2	♦ESMF	253- 63
	MISI	
15PT1	♦CITF	304- 56
15PT2	♦CITF	315- 89
15PT4	♦CITF	334- 96
15PT6	♦CITF	351-102
15PT8	♦CITF	364- 31
15PT10	♦CITF	374- 4
15Q3	SAR	308- 26
15T4	♦ESMF	440- 87
	MISI	
15Z6F,AF	♦ESMF	170-164
	MISI	
16C10	SYN	426-109
16C10B	SYN	426-110
16C10C	SYN	427- 1
16C15	SYN	430-104
16C15B	SYN	430-105
16C15C	SYN	430-106
16C20	SYN	436- 38
16C20B	SYN	436- 39
16C20C	SYN	436- 40
16C025	SYN	415- 51
16C025B	SYN	415- 52
16C025C	SYN	415- 53
16C25	SYN	441- 15
16C25B	SYN	441- 16
16C25C	SYN	441- 17
16C30	SYN	444- 68
16C30B	SYN	444- 69
16C30C	SYN	444- 70
16C35	SYN	448- 21
16C35B	SYN	448- 22
16C35C	SYN	448- 23
16C40	SYN	452- 30
16C40B	SYN	452- 31
16C40C	SYN	452- 32
16C45	SYN	456- 80
16C45B	SYN	456- 81
16C45C	SYN	456- 82
16C050	SYN	420- 14
16C050B	SYN	420- 15
16C050C	SYN	420- 16
16C50	SYN	458-109
16C50B	SYN	458-110
16C50C	SYN	459- 1
16C60	SYN	465- 40
16C60B	SYN	465- 41
16C60C	SYN	465- 42
16C70	SYN	471- 18
16C70B	SYN	471- 19
16C70C	SYN	471- 20
16C80	SYN	475- 18
16C80B	SYN	475- 19
16C80C	SYN	475- 20
16F5	INRI	296- 94
16F10	INRI	304- 77
16F20	INRI	316- 1
16F40	INRI	335- 8
16F60	INRI	352- 6
16F80	INRI	364- 40
16F100	INRI	374- 12
16P2	♦ESMF	249- 84
	MISI	
16RC2A	INRB	415- 67
INRC	INRI	
	INRJ	
16RC5A	INRB	420- 53
INRC	INRI	
	INRJ	
16RC10A	INRB	427- 80
INRC	INRI	
	INRJ	
16RC15A	INRB	431- 6
INRC	INRI	
	INRJ	
16RC20A	INRB	437- 11
INRC	INRI	
	INRJ	
16RC25A	INRB	441- 26
INRC	INRI	
	INRJ	
16RC30A	INRB	445- 22
INRC	INRI	
	INRJ	
16RC40A	INRB	453- 10
INRC	INRI	
	INRJ	
16RC50A	INRB	459- 75
INRC	INRI	
	INRJ	
16RC60A	INRB	466- 17
INRC	INRI	
	INRJ	
16RC70A	INRB	471- 55
INRC	INRI	
	INRJ	
16RC80A	INRB	475- 82
INRC	INRI	
	INRJ	

TYPE No.	MFRS	Pg&Line
16RC90	INRB	479- 99
INRC	INRI	
	INRJ	
16RC90A	INRB	479-100
INRC	INRI	
	INRJ	
16RC100	INRB	482- 77
INRC	INRI	
	INRJ	
16RC100A	INRB	482- 78
INRC	INRI	
	INRJ	
16RCF5A	INRB	420- 54
INRC	INRI	
	INRJ	
16RCF10A	INRB	427- 81
INRC	INRI	
	INRJ	
16RCF15A	INRB	431- 7
INRC	INRI	
	INRJ	
16RCF20A	INRB	437- 12
INRC	INRI	
	INRJ	
16RCF25A	INRB	441- 27
INRC	INRI	
	INRJ	
16RCF30A	INRB	445- 23
INRC	INRI	
	INRJ	
16RCF40A	INRB	453- 11
INRC	INRI	
	INRJ	
16RCF50A	INRB	459- 76
INRC	INRI	
	INRJ	
16RCF60A	INRB	466- 18
INRC	INRI	
	INRJ	
16T4	♦ESMF	442- 76
	MISI	
16Z6F,AF	♦ESMF	172- 7
	MISI	
17P2	♦ESMF	247- 90
	MISI	
17T4	♦ESMF	449- 36
	MISI	
17Z6F,AF	♦ESMF	173- 74
	MISI	
18P2	♦ESMF	246- 36
	MISI	
18RC2	INRB	415- 68
INRC	INRI	
	INRJ	
18RC5	INRB	420- 55
INRC	INRI	
	INRJ	
18RC10	INRB	427- 82
INRC	INRI	
	INRJ	
18RC15	INRB	431- 8
INRC	INRI	
	INRJ	
18RC20	INRB	437- 13
INRC	INRI	
	INRJ	
18RC25	INRB	441- 28
INRC	INRI	
	INRJ	
18RC30	INRB	445- 24
INRC	INRI	
	INRJ	
18RC40	INRB	453- 12
INRC	INRI	
	INRJ	
18RC50	INRB	459- 77
INRC	INRI	
	INRJ	
18RC60	INRB	466- 19
INRC	INRI	
	INRJ	
18RC70	INRB	471- 56
INRC	INRI	
	INRJ	
18RC80	INRB	475- 83
INRC	INRI	
	INRJ	
18RC90	INRB	479-101
INRC	INRI	
	INRJ	
18RC100	INRB	482- 79
INRC	INRI	
	INRJ	
18Z6F,AF	♦ESMF	175- 49
	MISI	
19P1	♦ESMF	265- 26
	MISI	
19P2	♦ESMF	246- 40
	MISI	
19Z6F,AF	♦ESMF	177-169
	MISI	
20A1	INRB	302- 51
INRC	INRI	
	INRJ	
20A2	INRB	313- 56
INRC	INRI	
	INRJ	
20A3	INRB	322-106
INRC	INRI	
	INRJ	
20A4	INRB	332- 42
INRC	INRI	
	INRJ	

TYPE No.	MFRS	Pg&Line
20A05	INRB	295- 25
INRC	INRI	
	INRJ	
20A5	INRB	341- 68
INRC	INRI	
	INRJ	
20A6	INRB	349- 62
INRC	INRI	
	INRJ	
20A8	INRB	362- 14
INRC	INRI	
	INRJ	
20A10	INRB	372- 38
INRC	INRI	
	INRJ	
20AS	AEIL	310- 30
20C1	CITF	306- 49
20C2	♦CITF	317-109
20C4	♦CITF	337- 37
20C5	INRB	341- 69
INRI	INRJ	
20C6Δ	♦CITF	353-103
20C8Δ	♦CITF	365-107
20C10Δ	♦CITF	375- 43
20C12	♦CITF	380- 45
20C14	♦CITF	383- 12
20C16	♦CITF	386-109
20C18	CITF	388- 69
20F1	AMD	313- 18
20F5	AMD	314- 67
20J3P	SAR	315- 56
20JH3	SAR	317- 40
20L15	EDL	384- 21
20L20	EDL	389- 68
20L25	EDL	392- 33
20L30	EDL	394- 8
20L35	EDL	395- 61
20L40	EDL	396-101
20L45	EDL	398- 12
20L50	EDL	399- 49
20L55	EDL	400- 43
20L60	EDL	401- 6
20L65	EDL	401- 89
20L70	EDL	402- 34
20L75	EDL	402-104
20L80	EDL	403- 72
20L85	EDL	404- 32
20L90	EDL	404- 72
20L95	EDL	405- 2
20L100	EDL	405- 93
20L110	EDL	406- 73
20L120	EDL	407- 29
20L130	EDL	407- 66
20L140	EDL	407- 98
20L150	EDL	408- 45
20L159	EDL	384- 22
20L160	EDL	409- 5
20L170	EDL	409- 30
20L180	EDL	409- 57
20L190	EDL	409- 75
20L200	EDL	410- 17
20L209	EDL	389- 69
20L210	EDL	410- 55
20L220	EDL	410- 70
20L230	EDL	410- 84
20L240	EDL	410- 98
20L250	EDL	411- 27
20L259	EDL	392- 34
20L260	EDL	411- 61
20L270	EDL	411- 74
20L280	EDL	411- 87
20L290	EDL	411-100
20L300	EDL	412- 28
20L309	EDL	394- 9
20L359	EDL	395- 62
20L409	EDL	396-102
20L459	EDL	398- 13
20L509	EDL	399- 50
20L559	EDL	400- 44
20L609	EDL	401- 7
20L659	EDL	401- 90
20L709	EDL	402- 35
20L759	EDL	402-105
20L809	EDL	403- 73
20L859	EDL	404- 33
20L909	EDL	404- 73
20L959	EDL	405- 3
20L1009	EDL	405- 94
20M10	♦INRJ	305- 84
20M15	♦INRJ	308- 67
20M20	♦INRJ	317- 24
20M30	♦INRJ	325- 66
20M40	♦INRJ	336- 45
20M50	♦INRJ	343-104
20M60	♦INRJ	353- 17
20M80	♦INRJ	365- 31
20M100	♦INRJ	374- 85
20PM1	♦CITF	304- 89
20PM2	♦CITF	316- 15
20PM4	♦CITF	335- 18
20PM6	♦CITF	352- 18
20PM8	♦CITF	364- 49
20PM10	♦CITF	374- 20
20Q3	SAR	315- 97
20R2	ESMF	296-103
	MISI	
20S5	AMD	310- 51
20TC05	CITF	421- 26
20TC10	CITF	429- 15
20TC15	CITF	431- 78
20TC20	CITF	439- 51
20TC25	CITF	441- 98
20TC30	CITF	447- 11
20TC40	CITF	455- 78

TYPE No.	MFRS	Pg&Line
20TC50	CITF	461- 73
20TC60	CITF	469- 40
20TC70	CITF	472-105
20TC80	CITF	478- 32
20TC90	CITF	481- 34
20TC100	CITF	484- 79
20TC110	CITF	486- 92
20TC120	CITF	489- 21
20TCA10	CITF	428- 93
20TCA20	CITF	438-103
20TCA30	CITF	446- 84
20TCA40	CITF	455- 18
20TCA50	CITF	461- 36
20TCA60	CITF	468- 82
20TCA70	CITF	472- 81
20TCA80	CITF	477- 81
20TCA90	CITF	481- 10
20TCA100	CITF	484- 33
20TCA110	CITF	486- 93
20TCA120	CITF	489- 22
20Z6F,AF	♦ESMF	180- 40
	MISI	
21PT5	♦INRI	296-104
21PT10	♦INRI	304- 94
21PT20	♦INRI	316- 18
21PT40	♦INRI	335- 21
21PT60	♦INRI	352- 21
21RC10	♦INRJ	427- 63
21RC20	♦INRJ	436-103
21RC30	♦INRJ	445- 6
21RC40	♦INRJ	452- 99
21RC50	♦INRJ	459- 56
21RC60	♦INRJ	465-107
21RC80	♦INRJ	475- 67
21RC100	♦INRJ	482- 65
21Z6F,AF	♦ESMF	182- 88
	MISI	
22R2	ESMF	316- 12
	MISI	
22RC2	INRB	415- 72
INRC	INRI	
	INRJ	
22RC5	INRB	420- 59
INRC	INRI	
	INRJ	
22RC10	INRB	427- 88
INRC	INRI	
	INRJ	
22RC15	INRB	431- 10
INRC	INRI	
	INRJ	
22RC20	INRB	437- 19
INRC	INRI	
	INRJ	
22RC25	INRB	441- 30
INRC	INRI	
	INRJ	
22RC30	INRB	445- 30
INRC	INRI	
	INRJ	
22RC40	INRB	453- 18
INRC	INRI	
	INRJ	
22RC50	INRB	459- 84
INRC	INRI	
	INRJ	
22RC60	INRB	466- 29
INRC	INRI	
	INRJ	
22Z6F,AF	♦ESMF	186- 21
	MISI	
23J2	♦ESMF	257- 2
	MISI	
23TB1	♦WESB	427- 71
23TB2	♦WESB	437- 2
23TB3	♦WESB	445- 13
23TB4	♦WESB	453- 1
23TB5	♦WESB	459- 65
23TB6	♦WESB	466- 7
23TB7	♦WESB	471- 49
23TB8	♦WESB	475- 75
23TB9	♦WESB	479- 96
23TB10	♦WESB	482- 73
23TB11	♦WESB	486- 1
23TB12	♦WESB	487-101
23Z6F,AF	♦ESMF	188- 97
	MISI	
24J2	♦ESMF	255- 93
	MISI	
24R2	♦ESMF	335- 16
	MISI	
24TB1	♦WESB	427- 64
24TB2	♦WESB	436-105
24TB3	♦WESB	445- 7
24TB4	♦WESB	452-102
24TB5	♦WESB	459- 58
24TB6	♦WESB	465-110
24TB7	♦WESB	471- 43
24TB8	♦WESB	475- 69
24TB9	♦WESB	479- 92
24TB10	♦WESB	482- 68
24TB11	♦WESB	485-103
24TB12	♦WESB	487- 96
24Z6F,AF	♦ESMF	190- 92
	MISI	
25AN20	♦WESI	316-109
25AN30	♦WESI	325- 45
25AN40	♦WESI	336- 17
25AN50	♦WESI	343- 90
25AN60	♦WESI	352-105
25AN80	♦WESI	365- 9
25AN100	♦WESI	374- 67
25AN120	♦WESI	379- 97
25AN140	♦WESI	382- 73

TYPE No.	MFRS	Pg&Line
25AN160	♦WESI	386- 84
25ANS	♦WESI	336- 18
25B05T	♦INRB	297- 7
25B10T	♦INRB	305- 2
25B20T	♦INRB	316- 36
25B40T	♦INRB	335- 42
25B60T	♦INRB	352- 37
25C1	CITF	306- 63
25C2	♦CITF	318- 14
25C4	♦CITF	337- 54
25C6	♦CITF	354- 5
25C8	♦CITF	366- 9
25C10	♦CITF	375- 52
25C12	♦CITF	380- 51
25C14	♦CITF	383- 14
25C15	AMD	308- 40
25C16	♦CITF	387- 2
25C70	AMD	357- 44
25C80	AMD	364- 68
25C90	AMD	367-107
25C100	AMD	374- 38
25F05	AMD	297- 26
25F15	AMD	308- 41
25F50	AMD	343- 59
25F60	AMD	352- 53
25F70	AMD	357- 45
25F80	AMD	364- 69
25F90	AMD	367-108
25F100	AMD	374- 39
25FXF11	TOSJ	394- 93
25G5	INRB	297- 67
	♦INRI	
25G10	INRB	305- 83
	♦INRI	
25G20	INRB	317- 23
	♦INRI	
25G40	INRB	336- 44
	♦INRI	
25G60	INRB	353- 16
	♦INRI	
25G80	INRB	365- 30
	♦INRI	
25G100	INRB	374- 84
	♦INRI	
25GC12	TOSJ	335- 44
25J2	♦ESMF	253-106
	MISI	
25JC12	TOSJ	352- 38
25K10	PPC	369- 22
25K20	PPC	389- 30
25K30	PPC	393- 69
25K40	PPC	396- 51
25K50	PPC	398-109
25L15	EDL	384- 30
25L20	EDL	389- 78
25L25	EDL	392- 39
25L30	EDL	394- 18
25L35	EDL	395- 69
25L40	EDL	397- 2
25L45	EDL	398- 22
25L50	EDL	399- 63
25L55	EDL	400- 47
25L60	EDL	401- 20
25L65	EDL	401- 93
25L70	EDL	402- 38
25L75	EDL	402-106
25L80	EDL	403- 81
25L85	EDL	404- 34
25L90	EDL	404- 76
25L95	EDL	405- 4
25L100	EDL	405-101
25L110	EDL	406- 74
25L120	EDL	407- 35
25L130	EDL	407- 68
25L140	EDL	407-101
25L150	EDL	408- 53
25L159	EDL	384- 31
25L160	EDL	409- 9
25L170	EDL	409- 33
25L180	EDL	409- 60
25L190	EDL	409- 77
25L200	EDL	410- 23
25L209	EDL	389- 79
25L210	EDL	410- 56
25L220	EDL	410- 72
25L230	EDL	410- 85
25L240	EDL	410-100
25L250	EDL	411- 31
25L259	EDL	392- 40
25L260	EDL	411- 63
25L270	EDL	411- 75
25L280	EDL	411- 89
25L290	EDL	411-101
25L300	EDL	412- 32
25L309	EDL	394- 19
25L359	EDL	395- 70
25L409	EDL	397- 3
25L459	EDL	398- 23
25L509	EDL	399- 64
25L559	EDL	400- 48
25L609	EDL	401- 21
25L659	EDL	401- 94
25L709	EDL	402- 39
25L759	EDL	402-107
25L809	EDL	403- 82
25L859	EDL	404- 35
25L909	EDL	404- 77
25L959	EDL	405- 5
25L1009	EDL	405-102
25LC12	TOSJ	364- 61
25NC12	TOSJ	374- 31
25P5	INRB	297- 15
INRC	INRI	
	INRJ	

Δ-Registered with JEDEC by this manufacturer

♦-Copy of mfr's data sheet may be ordered from D.A.T.A.

1. TYPE No. CROSS INDEX

IN TYPE NUMBER SEQUENCE

TYPE No.	MFRS	Pg&Line
25P10	INRB	305- 9
INRC	INRI	
	INRJ	
25P20	INRB	316- 46
INRC	INRI	
	INRJ	
25P30	INRB	325- 5
INRC	INRI	
	INRJ	
25P40	INRB	335- 50
INRC	INRI	
	INRJ	
25P50	INRB	343- 55
INRC	INRI	
	INRJ	
25P60	INRB	352- 43
INRC	INRI	
	INRJ	
25PW50	INRB	343- 56
INRC	INRI	
	INRJ	
25PW60	INRB	352- 44
INRC	INRI	
	INRJ	
25TB1	♦WESB	427- 72
25TB2	♦WESB	437- 3
25TB3	♦WESB	445- 14
25TB4	♦WESB	453- 2
25TB5	♦WESB	459- 66
25TB6	♦WESB	466- 8
25TB7	♦WESB	471- 50
25TB8	♦WESB	475- 76
25TB9	♦WESB	479- 97
25TB10	♦WESB	482- 74
25TB11	♦WESB	486- 2
25TB12	♦WESB	487-102
25Z6F,AF	♦ESMF	192-166
	MISI	
26J2	♦ESMF	250- 26
	MISI	
26P1	♦ESMF	272- 98
	MISI	
26R2	♦ESMF	352- 15
	MISI	
26R2S	♦ESMF	352- 16
	MISI	
26TB1	♦WESB	427- 65
26TB2	♦WESB	436-106
26TB3	♦WESB	445- 8
26TB4	♦WESB	452-103
26TB5	♦WESB	459- 59
26TB6	♦WESB	466- 1
26TB7	♦WESB	471- 44
26TB8	♦WESB	475- 70
26TB9	♦WESB	479- 93
26TB10	♦WESB	482- 69
26TB11	♦WESB	485-104
26TB12	♦WESB	487- 97
26Z6F,AF	♦ESMF	195- 30
	MISI	
27J2	♦ESMF	248- 22
	MISI	
27TB1	♦WESB	427-104
27TB2	♦WESB	437- 35
27TB3	♦WESB	445- 51
27TB4	♦WESB	453- 38
27TB5	♦WESB	459-101
27TB6	♦WESB	466- 46
27TB7	♦WESB	471- 69
27TB8	♦WESB	475- 98
27TB9	♦WESB	480- 7
27TB10	♦WESB	482- 93
27TB11	♦WESB	486- 13
27TB12	♦WESB	488- 8
27Z6F,AF	♦ESMF	196- 79
	MISI	
28J2	♦ESMF	246- 49
	MISI	
28R2	♦ESMF	364- 46
	MISI	
28R2S	♦ESMF	364- 47
	MISI	
28TB1	♦WESB	427-110
28TB2	♦WESB	437- 57
28TB3	♦WESB	445- 61
28TB4	♦WESB	453- 62
28TB5	♦WESB	460- 1
28TB6	♦WESB	466- 71
28TB7	♦WESB	471- 79
28TB8	♦WESB	476- 12
28TB9	♦WESB	480- 18
28TB10	♦WESB	482-108
28TB11	♦WESB	486- 19
28TB12	♦WESB	488- 22
28Z6F,AF	♦ESMF	197-182
	MISI	
29TB1	♦WESB	428- 10
29TB2	♦WESB	437- 68
29TB3	♦WESB	445- 72
29TB4	♦WESB	453- 74
29TB5	♦WESB	460- 8
29TB6	♦WESB	466- 79
29TB7	♦WESB	471- 83
29TB8	♦WESB	476- 18
29TB9	♦WESB	480- 20
29TB10	♦WESB	483- 1
29TB11	♦WESB	486- 20
29TB12	♦WESB	488- 23
30AS	AEIL	320- 85
30C1	CITF	306- 83
30C2	CITF	318- 46
30C4	CITF	337- 90
30C6	CITF	354- 39
30C8	CITF	366- 38

TYPE No	MFRS	Pg&Line
30C10	CITF	375- 80
30C12	CITF	380- 79
30C14	CITF	383- 38
30C16	CITF	387- 23
30F1	AMD	322- 78
30F2	♦ESMF	575- 26
	MISI	
30F5	AMD	323- 89
30J3P	SAR	324- 51
30JH3	SAR	325- 80
30L15	EDL	384- 42
30L20	EDL	389- 91
30L25	EDL	392- 48
30L30	EDL	394- 31
30L35	EDL	395- 74
30L40	EDL	397- 15
30L45	EDL	398- 25
30L50	EDL	399- 71
30L55	EDL	400- 49
30L60	EDL	401- 26
30L65	EDL	401- 95
30L70	EDL	402- 41
30L75	EDL	402-109
30L80	EDL	403- 87
30L85	EDL	404- 36
30L90	EDL	404- 79
30L95	EDL	405- 6
30L100	EDL	405-109
30L110	EDL	406- 76
30L120	EDL	407- 38
30L130	EDL	407- 69
30L140	EDL	407-102
30L150	EDL	408- 56
30L159	EDL	384- 43
30L160	EDL	409- 11
30L170	EDL	409- 34
30L180	EDL	409- 61
30L190	EDL	409- 80
30L200	EDL	410- 27
30L209	EDL	389- 92
30L210	EDL	410- 57
30L220	EDL	410- 73
30L230	EDL	410- 86
30L240	EDL	410-101
30L250	EDL	411- 33
30L259	EDL	392- 35
30L260	EDL	411- 64
30L270	EDL	411- 76
30L280	EDL	411- 90
30L290	EDL	411-102
30L300	EDL	412- 36
30L309	EDL	394- 32
30L359	EDL	395- 75
30L409	EDL	397- 16
30L459	EDL	398- 26
30L509	EDL	399- 72
30L559	EDL	400- 50
30L609	EDL	401- 27
30L659	EDL	401- 96
30L709	EDL	402- 42
30L759	EDL	402-110
30L809	EDL	403- 88
30L859	EDL	404- 37
30L909	EDL	404- 80
30L959	EDL	405- 7
30L1009	EDL	405-110
30PT1	♦CITF	305- 30
30PT2	♦CITF	316- 71
30PT4	♦CITF	335- 74
30PT6	♦CITF	352- 63
30PT8	♦CITF	364- 73
30PT10	♦CITF	374- 41
30Q3	SAR	324- 78
30R1	ERI	302- 90
30R2	ERI	374- 17
30R2S	♦ESMF	374- 18
	MISI	
30R3	ERI	323- 30
30R4	ERI	374- 95
30R6	ERI	349-109
30R8	ERI	362- 63
30R10	ERI	372- 75
30R12	ERI	378-106
30S1	♦INRB	303- 20
♦INRC	♦INRI	
	♦INRJ	
30S2	♦INRB	314- 29
♦INRC	♦INRI	
	♦INRJ	
30S3	♦INRB	323- 56
♦INRC	♦INRI	
	♦INRJ	
30S4	♦INRB	333- 22
♦INRC	♦INRI	
	♦INRJ	
30S5△	AMD	320- 98
30S5⊘	♦INRB	342- 13
♦INRC	♦INRI	
	♦INRJ	
30S6	♦INRB	350- 40
♦INRC	♦INRI	
	♦INRJ	
30S8	♦INRB	362- 96
♦INRC	♦INRI	
	♦INRJ	
30S10	♦INRB	372-102
♦INRC	♦INRI	
	♦INRJ	
30TC10	♦CITF	428- 92
30TC20	♦CITF	438- 92
30TC30	♦CITF	446- 83
30TC40	♦CITF	455- 7
30TC50	♦CITF	461- 35
30TC60	♦CITF	468- 71

TYPE No.	MFRS	Pg&Line
30TC70	♦CITF	472- 80
30TC80	♦CITF	477- 70
30TC90	♦CITF	481- 9
30TC100	♦CITF	484- 28
30TC110	♦CITF	486- 91
30TC120	♦CITF	489- 16
30TCA10	CITF	429- 13
30TCA20	CITF	439- 39
30TCA30	CITF	447- 8
30TCA40	CITF	455- 65
30TCA50	CITF	461- 69
30TCA60	CITF	469- 26
30TCA70	CITF	472-101
30TCA80	CITF	478- 18
30TCA90	CITF	481- 31
30TCA100	CITF	484- 73
30TCA110	CITF	486-108
30TCA120	CITF	489- 54
31F2	♦ESMF	575- 27
	MISI	
31R2	♦ESMF	305- 42
	MISI	
32F2	♦ESMF	575- 28
	MISI	
32R2	♦ESMF	316- 85
	MISI	
33F2	♦ESMF	575- 29
	MISI	
34F2	♦ESMF	575- 30
	MISI	
34P4	♦ESMF	265- 90
	MISI	
34R2	♦ESMF	335- 97
	MISI	
35C05B	♦SYN	420- 63
35C10	SYN	427- 95
35C10B	♦SYN	427- 96
35C10BF	SYN	427- 97
35C10F	SYN	427- 98
35C15	SYN	431- 13
35C15B	♦SYN	431- 14
35C15BF	SYN	431- 15
35C15F	SYN	431- 16
35C20	SYN	437- 26
35C20B	♦SYN	437- 27
35C20BF	SYN	437- 28
35C20F	SYN	437- 29
35C025	SYN	415- 75
35C025B	♦SYN	415- 76
35C025BF	SYN	415- 77
35C025F	SYN	415- 78
35C25	SYN	441- 33
35C25B	♦SYN	441- 34
35C25BF	SYN	441- 35
35C25F	SYN	441- 36
35C30	SYN	445- 36
35C30B	♦SYN	445- 37
35C30BF	SYN	445- 38
35C30F	SYN	445- 39
35C35	SYN	448- 30
35C35B	♦SYN	448- 31
35C35BF	SYN	448- 32
35C35F	SYN	448- 33
35C40	SYN	453- 25
35C40B	♦SYN	453- 26
35C40BF	SYN	453- 27
35C40F	SYN	453- 28
35C45	SYN	456- 87
35C45B	♦SYN	456- 88
35C45BF	SYN	456- 89
35C45F	SYN	456- 90
35C050	SYN	420- 64
35C050B	♦SYN	420- 65
35C050BF	SYN	420- 66
35C050F	SYN	420- 67
35C50	SYN	459- 90
35C50B	♦SYN	459- 91
35C50BF	SYN	459- 92
35C50F	SYN	459- 93
35C60	SYN	466- 33
35C60B	♦SYN	466- 34
35C60BF	SYN	466- 35
35C60F	SYN	466- 36
35C70△	AMD	357- 55
35C70⊘	SYN	471- 62
35C70B	♦SYN	471- 63
35C70BF	SYN	471- 64
35C70F	SYN	471- 65
35C80△	AMD	364- 92
35C80⊘	SYN	475- 89
35C80B	♦SYN	475- 90
35C80BF	SYN	475- 91
35C80F	SYN	475- 92
35C90△	AMD	368- 2
35C90⊘	SYN	479-107
35C90B	♦SYN	479-108
35C90BF	SYN	480- 1
35C90F	SYN	480- 2
35C100△	AMD	374- 53
35C100⊘	SYN	482- 85
35C100B	♦SYN	482- 86
35C100BF	SYN	482- 87
35C100F	SYN	482- 88
35C110	SYN	486- 5
35C110B	♦SYN	486- 6
35C110BF	SYN	486- 7
35C110F	SYN	486- 8
35C120	SYN	488- 1
35C120B	♦SYN	488- 2
35C120BF	SYN	488- 3
35C120F	SYN	488- 4
35F2	♦ESMF	575- 31
	MISI	
35F05	AMD	297- 42

TYPE No.	MFRS	Pg&Line
35F15	AMD	308- 49
35F50	AMD	343- 76
35F60	AMD	352- 82
35F70	AMD	357- 56
35F80	AMD	364- 93
35F90	AMD	368- 3
35F100	AMD	374- 54
35P4	♦ESMF	249- 61
	MISI	
36P4	♦ESMF	276- 77
	MISI	
36R2	♦ESMF	352- 83
	MISI	
36R2S	♦ESMF	352- 84
	MISI	
36RA50	INRB	460- 55
INRC	INRI	
	INRJ	
36RA60	INRB	467- 46
INRC	INRI	
	INRJ	
36RA70	INRB	471- 87
INRC	INRI	
	INRJ	
36RA80	INRB	476- 76
INRC	INRI	
	INRJ	
36RA90	INRB	480- 24
INRC	INRI	
	INRJ	
36RA100	INRB	483- 50
INRC	INRI	
	INRJ	
36RA110	INRB	486- 49
INRC	INRI	
	INRJ	
36RA120	INRB	488- 61
INRC	INRI	
	INRJ	
36RA130	INRB	490- 90
INRC	INRI	
	INRJ	
36RC2A	INRB	415- 89
INRC	INRI	
	INRJ	
36RC5A	INRB	420- 95
INRC	INRI	
	INRJ	
36RC10A	INRB	428- 36
INRC	INRI	
	INRJ	
36RC15A	INRB	431- 45
INRC	INRI	
	INRJ	
36RC20A	INRB	438- 5
INRC	INRI	
	INRJ	
36RC25A	INRB	441- 66
INRC	INRI	
	INRJ	
36RC30A	INRB	446- 12
INRC	INRI	
	INRJ	
36RC40A	INRB	454- 24
INRC	INRI	
	INRJ	
36RC50A	INRB	460- 56
INRC	INRI	
	INRJ	
36RC60A	INRB	467- 47
INRC	INRI	
	INRJ	
36RC70A	INRB	472- 12
INRC	INRI	
	INRJ	
36RC80A	INRB	476- 77
INRC	INRI	
	INRJ	
36RCF2A	INRB	415- 90
INRC	INRI	
	INRJ	
36RCF5A	INRB	420- 96
INRC	INRI	
	INRJ	
36RCF10A	INRB	428- 37
INRC	INRI	
	INRJ	
36RCF15A	INRB	431- 46
INRC	INRI	
	INRJ	
36RCF20A	INRB	438- 6
INRC	INRI	
	INRJ	
36RCF25A	INRB	441- 67
INRC	INRI	
	INRJ	
36RCF30A	INRB	446- 13
INRC	INRI	
	INRJ	
36RCF40A	INRB	454- 25
INRC	INRI	
	INRJ	
36RCF50A	INRB	460- 57
INRC	INRI	
	INRJ	
36RCF60A	INRB	467- 48
INRC	INRI	
	INRJ	
36RCF70A	INRB	472- 13
INRC	INRI	
	INRJ	
36RCF80A	INRB	476- 78
INRC	INRI	
	INRJ	

TYPE No.	MFRS	Pg&Line
36RE60	INRB	467- 49
INRC	INRI	
	INRJ	
36RE70	INRB	472- 14
INRC	INRI	
	INRJ	
36RE80	INRB	476- 79
INRC	INRI	
	INRJ	
36RE90	INRB	480- 58
INRC	INRI	
	INRJ	
36RE100	INRB	483- 51
INRC	INRI	
	INRJ	
36RE110	INRB	486- 50
INRC	INRI	
	INRJ	
36RE120	INRB	488- 62
INRC	INRI	
	INRJ	
36RE130	INRB	490- 91
INRC	INRI	
	INRJ	
36REH60	INRB	467- 60
INRC	INRI	
	INRJ	
36REH70	INRB	472- 19
INRC	INRI	
	INRJ	
36REH80	INRB	476- 86
INRC	INRI	
	INRJ	
36REH90	INRB	480- 60
INRC	INRI	
	INRJ	
36REH100	INRB	483- 56
INRC	INRI	
	INRJ	
36REH110	INRB	486- 53
INRC	INRI	
	INRJ	
36REH120	INRB	488- 66
INRC	INRI	
	INRJ	
36REH130	INRB	490- 94
INRC	INRI	
	INRJ	
36TB1	♦WESB	428- 24
36TB2	♦WESB	437- 85
36TB3	♦WESB	445-102
36TB4	♦WESB	453- 98
36TB5	♦WESB	460- 36
36TB6	♦WESB	467- 10
36TB7	♦WESB	471-107
36TB8	♦WESB	476- 42
36TB9	♦WESB	480- 44
36TB10	♦WESB	483- 25
36TB11	♦WESB	486- 36
36TB12	♦WESB	488- 39
37P4	♦ESMF	269-101
	MISI	
37RA50	INRB	460- 58
INRC	INRI	
	INRJ	
37RA60	INRB	467- 50
INRC	INRI	
	INRJ	
37RA70	INRB	471- 88
INRC	INRI	
	INRJ	
37RA80	INRB	476- 80
INRC	INRI	
	INRJ	
37RA90	INRB	480- 25
INRC	INRI	
	INRJ	
37RA100	INRB	483- 52
INRC	INRI	
	INRJ	
37RA110	INRB	486- 51
INRC	INRI	
	INRJ	
37RA120	INRB	488- 63
INRC	INRI	
	INRJ	
37RA130	INRB	490- 92
INRC	INRI	
	INRJ	
37RC2A	INRB	415- 91
INRC	INRI	
	INRJ	
37RC5A	INRB	420- 97
INRC	INRI	
	INRJ	
37RC10A	INRB	428- 38
INRC	INRI	
	INRJ	
37RC15A	INRB	431- 47
INRC	INRI	
	INRJ	
37RC20A	INRB	438- 7
INRC	INRI	
	INRJ	
37RC25A	INRB	441- 68
INRC	INRI	
	INRJ	
37RC30A	INRB	446- 14
INRC	INRI	
	INRJ	
37RC40A	INRB	454- 26
INRC	INRI	
	INRJ	

△-Registered with JEDEC by this manufacturer

♦-Copy of mfr's data sheet may be ordered from D.A.T.A.

1. TYPE No. CROSS INDEX

IN TYPE NUMBER SEQUENCE

TYPE No.	MFRS	Pg&Line
37RC50A	INRB	460- 59
INRC	INRI	
	INRJ	
37RC60A	INRB	467- 51
INRC	INRI	
	INRJ	
37RC70A	INRB	472- 15
INRC	INRI	
	INRJ	
37RC80A	INRB	476- 81
INRC	INRI	
	INRJ	
37RCF2A	INRB	415- 92
INRC	INRI	
	INRJ	
37RCF5A	INRB	420- 98
INRC	INRI	
	INRJ	
37RCF10A	INRB	428- 39
INRC	INRI	
	INRJ	
37RCF15A	INRB	431- 48
INRC	INRI	
	INRJ	
37RCF20A	INRB	438- 8
INRC	INRI	
	INRJ	
37RCF25A	INRB	441- 69
INRC	INRI	
	INRJ	
37RCF30A	INRB	446- 15
INRC	INRI	
	INRJ	
37RCF40A	INRB	454- 27
INRC	INRI	
	INRJ	
37RCF50A	INRB	460- 60
INRC	INRI	
	INRJ	
37RCF60A	INRB	467- 52
INRC	INRI	
	INRJ	
37RCF70A	INRB	472- 16
INRC	INRI	
	INRJ	
37RCF80A	INRB	476- 82
INRC	INRI	
	INRJ	
37RE60	INRB	467- 53
INRC	INRI	
	INRJ	
37RE70	INRB	472- 17
INRC	INRI	
	INRJ	
37RE80	INRB	476- 83
INRC	INRI	
	INRJ	
37RE90	INRB	480- 59
INRC	INRI	
	INRJ	
37RE100	INRB	483- 53
INRC	INRI	
	INRJ	
37RE110	INRB	486- 52
INRC	INRI	
	INRJ	
37RE120	INRB	488- 64
INRC	INRI	
	INRJ	
37RE130	INRB	490- 93
INRC	INRI	
	INRJ	
37REH60	INRB	467- 61
INRC	INRI	
	INRJ	
37REH70	INRB	472- 20
INRC	INRI	
	INRJ	
37REH80	INRB	476- 87
INRC	INRI	
	INRJ	
37REH90	INRB	480- 61
INRC	INRI	
	INRJ	
37REH100	INRB	483- 57
INRC	INRI	
	INRJ	
37REH110	INRB	486- 54
INRC	INRI	
	INRJ	
37REH120	INRB	488- 67
INRC	INRI	
	INRJ	
37REH130	INRB	490- 95
INRC	INRI	
	INRJ	
37TB1	♦WESB	428- 47
37TB2	♦WESB	438- 18
37TB3	♦WESB	446- 25
37TB4	♦WESB	454- 37
37TB5	♦WESB	460- 69
37TB6	♦WESB	467- 65
37TB7	♦WESB	472- 23
37TB8	♦WESB	476- 91
37TB9	♦WESB	480- 64
37TB10	♦WESB	483- 61
37TB11	♦WESB	486- 57
37TB12	♦WESB	488- 71
38R2	♦ESMF	364- 94
	MISI	
38R2S	♦ESMF	364- 95
	MISI	
38TB1	♦WESB	428- 51
38TB2	♦WESB	438- 32

TYPE No.	MFRS	Pg&Line
38TB3	♦WESB	446- 30
38TB4	♦WESB	454- 54
38TB5	♦WESB	460- 76
38TB6	♦WESB	467- 84
38TB7	♦WESB	472- 31
38TB8	♦WESB	477- 1
38TB9	♦WESB	480- 70
38TB10	♦WESB	483- 74
38TB11	♦WESB	486- 62
38TB12	♦WESB	488- 81
40AS	AEIL	328- 97
40B05T	♦INRB	297- 48
40B10T	♦INRB	305- 50
40B20T	♦INRB	316- 92
40B40T	♦INRB	335-102
40B60T	♦INRB	352- 88
40C1	CITF	306- 84
40C2	♦CITF	318- 34
40C4	♦CITF	337- 77
40C6	♦CITF	354- 27
40C8	♦CITF	366- 29
40C10	♦CITF	375- 71
40C12	♦CITF	380- 68
40C14	♦CITF	383- 65
40C16	♦CITF	387- 44
40F1	AMD	332- 5
40F5	AMD	333- 59
40HF5	INRB	297- 51
	INRC	
	INRI	
	INRJ	
40HF10	INRB	305- 58
	INRC	
	INRI	
	INRJ	
40HF15	INRB	308- 55
	INRC	
	INRI	
	INRJ	
40HF20	INRB	316-103
	INRC	
	INRI	
	INRJ	
40HF30	INRB	325- 39
	INRC	
	INRI	
	INRJ	
40HF40	INRB	336- 8
	INRC	
	INRI	
	INRJ	
40HF50	INRB	343- 84
	INRC	
	INRI	
	INRJ	
40HF60	INRB	352- 99
	INRC	
	INRI	
	INRJ	
40HF70	INRB	357- 60
	INRC	
	INRI	
	INRJ	
40HF80	INRB	365- 3
	INRC	
	INRI	
	INRJ	
40HF90	INRB	368- 6
	INRC	
	INRI	
	INRJ	
40HF100	INRB	374- 66
	INRC	
	INRI	
	INRJ	
40J3P	SAR	334- 55
40JH3	SAR	336- 61
40L15	EDL	384- 50
40L20	EDL	389-103
40L25	EDL	392- 54
40L30	EDL	394- 41
40L35	EDL	395- 76
40L40	EDL	397- 22
40L45	EDL	398- 29
40L50	EDL	399- 84
40L55	EDL	400- 51
40L60	EDL	401- 41
40L65	EDL	401- 97
40L70	EDL	402- 51
40L75	EDL	403- 4
40L80	EDL	403- 95
40L85	EDL	404- 38
40L90	EDL	404- 85
40L95	EDL	405- 8
40L100	EDL	406- 14
40L110	EDL	406- 77
40L120	EDL	407- 40
40L130	EDL	407- 70
40L140	EDL	407-104
40L150	EDL	408- 58
40L159	EDL	384- 51
40L160	EDL	409- 15
40L170	EDL	409- 35
40L180	EDL	409- 62
40L190	EDL	409- 81
40L200	EDL	410- 28
40L209	EDL	389-104
40L210	EDL	410- 58
40L220	EDL	410- 74
40L230	EDL	410- 87
40L240	EDL	410-102
40L250	EDL	411- 34
40L259	EDL	392- 55
40L260	EDL	411- 65
40L270	EDL	411- 77
40L280	EDL	411- 91
40L290	EDL	411-103
40L300	EDL	412- 37
40L309	EDL	394- 42
40L359	EDL	395- 77
40L409	EDL	397- 23
40L459	EDL	398- 30
40L509	EDL	399- 85
40L559	EDL	400- 52
40L609	EDL	401- 42
40L659	EDL	401- 98

TYPE No.	MFRS	Pg&Line
40L709	EDL	402- 52
40L759	EDL	403- 5
40L809	EDL	403- 96
40L859	EDL	404- 39
40L909	EDL	404- 86
40L959	EDL	405- 9
40L1009	EDL	406- 15
40Q3	SAR	334-103
40Q4	♦SAR	334-104
40R2S	♦ESMF	374- 55
	MISI	
40RCS5	INRB	420- 69
♦INRC	INRI	
	INRJ	
40RCS10	INRB	427-107
♦INRC	INRI	
	INRJ	
40RCS20	INRB	437- 38
♦INRC	INRI	
	INRJ	
40RCS25	INRB	441- 46
INRC	INRI	
	INRJ	
40RCS30	INRB	445- 57
♦INRC	INRI	
	INRJ	
40RCS40	INRB	453- 43
♦INRC	INRI	
	INRJ	
40RCS50	INRB	459-106
♦INRC	INRI	
	INRJ	
40RCS60	INRB	466- 52
♦INRC	INRI	
	INRJ	
40RCS70	♦INRB	471- 74
♦INRC	♦INRI	
	♦INRJ	
40RCS80	♦INRB	475-103
♦INRC	♦INRI	
	♦INRJ	
40RCS90	♦INRB	480- 13
♦INRC	♦INRI	
	♦INRJ	
40RCS100	♦INRB	482- 96
♦INRC	♦INRI	
	♦INRJ	
40RCS110	♦INRB	486- 16
♦INRC	♦INRI	
	♦INRJ	
40RCS120	♦INRB	490- 49
♦INRC	♦INRI	
	♦INRJ	
40S5	AMD	329- 12
40SG1	♦ERI	254- 27
40SG2	♦ERI	257- 44
40SG3	♦ERI	258- 94
40SG4	♦ERI	259- 57
40SG5	♦ERI	259-101
40SG6	♦ERI	260- 8
40SG7	♦ERI	260- 31
40SG8	♦ERI	260- 44
40T1	WESB	422- 94
40T2	WESB	431- 95
40T3	WESB	441- 47
40T4	WESB	447-109
40T5	WESB	453- 90
40T6	WESB	460- 27
40T7	WESB	466-107
40T8	WESB	470- 65
40T9	WESB	473- 85
40T10	WESB	476- 35
40T11	WESB	480- 38
40T12	WESB	481- 97
40T13	WESB	483- 20
40T14	WESB	486- 29
40T15	WESB	488- 34
40TC10	♦CITF	429- 38
40TC20	♦CITF	439- 81
40TC30	♦CITF	447- 40
40TC40	♦CITF	455-110
40TC50	♦CITF	461-103
40TC60	♦CITF	469- 79
40TC70	♦CITF	473- 15
40TC80	♦CITF	478- 65
40TC90	♦CITF	481- 49
40TC100	♦CITF	484-108
40TC110	♦CITF	487- 13
40TC120	♦CITF	489- 84
40TCA10	CITF	429- 48
40TCA20	CITF	439- 91
40TCA30	CITF	447- 49
40TCA40	CITF	456- 9
40TCA50	CITF	462- 1
40TCA60	CITF	469- 88
40TCA70	CITF	473- 17
40TCA80	CITF	478- 73
40TCA90	CITF	481- 51
40TCA100	CITF	485- 6
40TCA110	CITF	487- 15
40TCA120	CITF	489- 91
42R2	♦ESMF	314- 87
	MISI	
42TB1	♦WESB	428- 91
42TB2	♦WESB	438- 91
42TB3	♦WESB	446- 82
42TB4	♦WESB	455- 6
42TB5	♦WESB	461- 34
42TB6	♦WESB	468- 70
42TB7	♦WESB	472- 79
42TB8	♦WESB	477- 69
42TB9	♦WESB	481- 8
42TB10	♦WESB	484- 27
42TB11	♦WESB	486- 90

TYPE No.	MFRS	Pg&Line
42TB12	♦WESB	489- 15
42TB13	♦WESB	491- 26
42TB14	♦WESB	492- 32
42TB15	♦WESB	493- 15
43TB1	♦WESB	428-107
43TB2	♦WESB	439- 20
43TB3	♦WESB	446-100
43TB4	♦WESB	455- 44
43TB5	♦WESB	461- 51
43TB6	♦WESB	469- 2
43TB7	♦WESB	472- 89
43TB8	♦WESB	477-108
43TB9	♦WESB	481- 20
43TB10	♦WESB	484- 54
43TB11	♦WESB	486-100
43TB12	♦WESB	489- 38
44R2	♦ESMF	333- 80
	MISI	
45AR20	♦WESI	317- 27
45AR30	♦WESI	325- 69
45AR40	♦WESI	336- 48
45AR50	♦WESI	343-107
45AR60	♦WESI	353- 20
45AR80	♦WESI	365- 33
45AR100	♦WESI	374- 86
45AR120	♦WESI	379-107
45AR140	♦WESI	382- 82
45AR160	♦WESI	386- 86
45ARS	♦WESI	336- 49
45L15	INRB	308- 88
INRC	INRI	
	INRJ	
45L25	INRB	319- 84
INRC	INRI	
	INRJ	
45L70	INRB	357- 96
INRC	INRI	
	INRJ	
45L90	INRB	368- 30
INRC	INRI	
	INRJ	
45M10	♦INRJ	306- 24
45M15	♦INRJ	308- 90
45M20	♦INRJ	317- 83
45M30	♦INRJ	326- 9
45M40	♦INRJ	337- 3
45M50	♦INRJ	344- 48
45M60	♦INRJ	353- 76
45M80	♦INRJ	365- 85
45M100	♦INRJ	375- 22
46R2	♦ESMF	350- 93
	MISI	
46R2S	♦ESMF	350- 94
	MISI	
46TB1	♦WESB	429- 5
46TB2	♦WESB	439- 28
46TB3	♦WESB	446-108
46TB4	♦WESB	455- 53
46TB5	♦WESB	461- 59
46TB6	♦WESB	469- 13
46TB7	♦WESB	472- 95
46TB8	♦WESB	478- 10
46TB9	♦WESB	481- 26
46TB10	♦WESB	484- 65
46TB11	♦WESB	486-104
46TB12	♦WESB	489- 48
47TB1	♦WESB	429- 14
47TB2	♦WESB	439- 40
47TB3	♦WESB	447- 9
47TB4	♦WESB	455- 66
47TB5	♦WESB	461- 71
47TB6	♦WESB	469- 28
47TB7	♦WESB	472-103
47TB8	♦WESB	478- 20
48R2	♦ESMF	363- 29
	MISI	
48R2S	♦ESMF	363- 30
	MISI	
50AS	AEIL	339- 49
50C05	AMD	297- 60
50C10	AMD	305- 71
50C15	AMD	308- 61
50C20	AMD	317- 9
50C30	AMD	325- 55
50C40	AMD	336- 29
50C50	AMD	343- 93
50C60	AMD	353- 1
50C70	AMD	357- 65
50C80	AMD	365- 18
50C90	AMD	368- 7
50C100	AMD	374- 74
50F1	AMD	341- 42
50F5	AMD	342- 35
50F20	♦SCO	289- 2
50F30	♦SCO	289- 32
50F40	♦SCO	289- 56
50F50	♦SCO	289- 81
50J1	SAR	341- 43
50J2P	SAR	342- 82
50J3P	SAR	342-101
50JH3	SAR	344- 9
50K10	PPC	369- 26
50K20	PPC	389- 37
50K30	PPC	393- 80
50K40	PPC	396- 61
50K50	PPC	399- 15
50L15	EDL	384- 55
50L20	EDL	389-108
50L25	EDL	392- 57
50L30	EDL	394- 48
50L35	EDL	395- 79
50L40	EDL	397- 31
50L45	EDL	398- 31
50L50	EDL	399- 89

TYPE No.	MFRS	Pg&Line
50L55	EDL	400- 53
50L60	EDL	401- 46
50L65	EDL	401- 99
50L70	EDL	402- 54
50L75	EDL	403- 6
50L80	EDL	403- 99
50L85	EDL	404- 40
50L90	EDL	404- 87
50L95	EDL	405- 10
50L100	EDL	406- 16
50L110	EDL	406- 78
50L120	EDL	407- 42
50L130	EDL	407- 71
50L140	EDL	407-105
50L150	EDL	408- 61
50L159	EDL	384- 56
50L160	EDL	409- 16
50L170	EDL	409- 36
50L180	EDL	409- 63
50L190	EDL	409- 82
50L200	EDL	410- 29
50L209	EDL	389-109
50L210	EDL	410- 59
50L220	EDL	410- 75
50L230	EDL	410- 88
50L240	EDL	410-103
50L250	EDL	411- 37
50L259	EDL	392- 58
50L260	EDL	411- 66
50L270	EDL	411- 78
50L280	EDL	411- 92
50L290	EDL	411-104
50L300	EDL	412- 38
50L309	EDL	394- 49
50L359	EDL	395- 80
50L409	EDL	397- 32
50L459	EDL	398- 32
50L509	EDL	399- 90
50L559	EDL	400- 54
50L609	EDL	401- 47
50L659	EDL	401-100
50L709	EDL	402- 55
50L759	EDL	403- 7
50L809	EDL	403-100
50L859	EDL	404- 41
50L909	EDL	404- 88
50L959	EDL	405- 11
50L1009	EDL	406- 17
50LA	SAR	341- 77
50LF	♦SAR	342- 36
50M	SAR	339- 65
50R2S	♦ESMF	373- 25
	MISI	
50S5	AMD	339- 66
50S20	♦SCO	389- 42
50S30	♦SCO	393- 88
50S40	♦SCO	396- 73
50S50	♦SCO	399- 25
50T6.8,A,B	♦SAR	178-155
50T7.5,A,B	♦SAR	181- 3
50T8 2,A,B	♦SAR	183- 69
50T9.1,A,B	♦SAR	186-176
50T10,A,B	♦SAR	189- 93
50T11,A,B	♦SAR	191- 61
50T12,A,B	♦SAR	193-186
50T13,A,B	♦SAR	195-195
50T15,A,B	♦SAR	198-189
50T16,A,B	♦SAR	200-135
50T18,A,B	♦SAR	203- 80
50T20,A,B	♦SAR	206- 6
50T22,A,B	♦SAR	208- 2
50T24,A,B	♦SAR	209-163
50T27,A,B	♦SAR	212- 70
50T30,A,B	♦SAR	214- 64
50T33,A,B	♦SAR	216- 25
50T36,A,B	♦SAR	217-110
50T39,A,B	♦SAR	218-183
50T43,A,B	♦SAR	220- 68
50T47,A,B	♦SAR	222- 21
50T51,A,B	♦SAR	223-138
50T62,A,B	♦SAR	226-171
50T68,A,B	♦SAR	228- 60
50T75,A,B	♦SAR	229-159
50T82,A,B	♦SAR	231- 47
50T91,A,B	♦SAR	232-154
50T100,A,B	♦SAR	234- 53
50T110,A,B	♦SAR	235-163
50T120,A,B	♦SAR	237- 30
50T130,A,B	♦SAR	238- 50
50T150,A,B	♦SAR	240- 47
50T160,A,B	♦SAR	241- 42
50T180,A,B	♦SAR	242-168
50T200,A,B	♦SAR	244- 25
50XV	♦ESMF	582- 75
	MISI	
51C	♦CRL	579- 96
51RC10	♦INRJ	428- 44
51RC20	♦INRJ	438- 15
51RC30	♦INRJ	446- 22
51RC40	♦INRJ	454- 34
51RC50	♦INRJ	460- 66
51RC60	♦INRJ	467- 59
51RC70	INRJ	472- 18
51RC80	♦INRJ	476- 85
51RC100	♦INRJ	483- 55
51RC120	♦INRJ	488- 65
51RCG5	INRB	420- 99
INRC	INRI	
	INRJ	
51RCG10	INRB	428- 40
INRC	INRI	
	INRJ	
51RCG15	INRB	431- 49

cont next page

△-Registered with JEDEC by this manufacturer

♦-Copy of mfr's data sheet may be ordered from D.A.T.A.

1. TYPE No. CROSS INDEX

IN TYPE NUMBER SEQUENCE

TYPE No.	MFRS	Pg&Line
51RCG15		
(cont)	INRC	
INRI	INRJ	
51RCG20	INRB	438- 9
INRC	INRI	
	INRJ	
51RCG25	INRB	441- 70
INRC	INRI	
	INRJ	
51RCG30	INRB	446- 16
INRC	INRI	
	INRJ	
51RCG40	INRB	454- 28
INRC	INRI	
	INRJ	
51RCG50	INRB	460- 61
INRC	INRI	
	INRJ	
51RCG60	INRB	467- 54
INRC	INRI	
	INRJ	
51Z6,A	♦ESMF	167- 77
	MISI	
52C	♦CRL	579- 97
52RCG5	INRB	420-100
INRC	INRI	
	INRJ	
52RCG10	INRB	428- 41
INRC	INRI	
	INRJ	
52RCG15	INRB	431- 50
INRC	INRI	
	INRJ	
52RCG20	INRB	438- 10
INRC	INRI	
	INRJ	
52RCG25	INRB	441- 71
INRC	INRI	
	INRJ	
52RCG30	INRB	446- 17
INRC	INRI	
	INRJ	
52RCG40	INRB	454- 29
INRC	INRI	
	INRJ	
52RCG50	INRB	460- 62
INRC	INRI	
	INRJ	
52RCG60	INRB	467- 55
INRC	INRI	
	INRJ	
52Z6,A	♦ESMF	168- 37
	MISI	
53Z6,A	♦ESMF	168-195
	MISI	
54Z6,A	♦ESMF	169-191
	MISI	
55C	♦CRL	579- 98
55Z6,A	♦ESMF	171- 7
	MISI	
56TB16	♦WESB	493- 90
56TB17	♦WESB	494- 35
56TB18	♦WESB	494- 56
56TB19	♦WESB	494- 85
56TB20	♦WESB	494- 95
56Z6,A	♦ESMF	172- 42
	MISI	
57TB16	♦WESB	493- 94
57TB17	♦WESB	494- 36
57TB18	♦WESB	494- 58
57TB19	♦WESB	494- 86
57TB20	♦WESB	494- 96
57Z6,A	♦ESMF	173-119
	MISI	
58C	♦CRL	579- 99
58TB13	♦WESB	491- 39
58TB14	♦WESB	492- 61
58TB15	♦WESB	493- 21
58TB16	♦WESB	493- 99
58TB17	♦WESB	494- 37
58TB18	♦WESB	494- 59
58TB19	♦WESB	494- 87
58TB20	♦WESB	494- 97
58Z6,A	ESMF	175- 96
	MISI	
59Z6,A	♦ESMF	178- 67
	MISI	
60AC40	♦INRB	506- 94
♦INRC	♦INRI	
	♦INRJ	
60AC60	♦INRB	508- 66
♦INRC	♦INRI	
	♦INRJ	
60AC80	♦INRB	509- 12
♦INRC	♦INRI	
	♦INRJ	
60AC100	♦INRB	509- 21
♦INRC	♦INRI	
	♦INRJ	
60AS	AEIL	346- 42
60F1	AMD	349- 23
60F5	AMD	350- 75
60J1	SAR	349- 24
60J2P	SAR	351- 44
60J3P	SAR	351- 68
60JH3	SAR	353- 32
60L15	EDL	384- 65
60L20	EDL	390- 9
60L25	EDL	392- 60
60L30	EDL	394- 54
60L35	EDL	395- 81
60L40	EDL	397- 36
60L45	EDL	398- 35
60L50	EDL	399- 95

TYPE No.	MFRS	Pg&Line
60L55	EDL	400- 55
60L60	EDL	401- 52
60L65	EDL	401-101
60L70	EDL	402- 57
60L75	EDL	403- 11
60L80	EDL	403-105
60L85	EDL	404- 42
60L90	EDL	404- 90
60L95	EDL	405- 12
60L100	EDL	406- 27
60L110	EDL	406- 80
60L120	EDL	407- 46
60L130	EDL	407- 72
60L140	EDL	407-106
60L150	EDL	408- 69
60L159	EDL	384- 66
60L160	EDL	409- 19
60L170	EDL	409- 37
60L180	EDL	409- 64
60L190	EDL	409- 83
60L200	EDL	410- 36
60L209	EDL	390- 10
60L210	EDL	410- 60
60L220	EDL	410- 76
60L230	EDL	410- 89
60L240	EDL	410-104
60L250	EDL	411- 43
60L259	EDL	392- 61
60L260	EDL	411- 67
60L270	EDL	411- 79
60L280	EDL	411- 93
60L290	EDL	411-105
60L300	EDL	412- 40
60L309	EDL	394- 55
60L359	EDL	395- 82
60L409	EDL	397- 37
60L459	EDL	398- 36
60L509	EDL	399- 96
60L559	EDL	400- 56
60L609	EDL	401- 53
60L659	EDL	401-102
60L709	EDL	402- 58
60L759	EDL	403- 12
60L809	EDL	403-106
60L859	EDL	404- 43
60L909	EDL	404- 91
60L959	EDL	405- 13
60L1009	EDL	406- 28
60LA	SAR	349- 25
60LF	♦SAR	350- 76
60M	SAR	346- 60
60S5	AMD	346- 61
60T4	♦ESMF	414- 76
	MISI	
60Z6,A	♦ESMF	180-109
	MISI	
61T4⊠	♦ESMF	417- 95
	MISI	
61TB1	♦WESB	429- 35
61TB2	♦WESB	439- 78
61TB3	♦WESB	447- 37
61TB4	♦WESB	455-107
61TB5	♦WESB	461- 99
61TB6	♦WESB	469- 75
61TB7	♦WESB	473- 13
61TB8	♦WESB	478- 61
61TB9	♦WESB	481- 47
61TB10	♦WESB	484-104
61TB11	♦WESB	487- 10
61TB12	♦WESB	489- 80
61TB13	♦WESB	491- 52
61TB14	♦WESB	492- 71
61TB15	♦WESB	493- 25
61TB16	♦WESB	493-108
61TB17	♦WESB	494- 40
61TB18	♦WESB	494- 64
61TB19	♦WESB	494- 88
61TB20	♦WESB	494- 98
61Z6,A	♦ESMF	182-162
	MISI	
62R2	♦ESMF	315- 28
	MISI	
62T4⊠	♦ESMF	423- 26
	MISI	
62TB1	♦WESB	429- 52
62TB2	♦WESB	439- 95
62TB3	♦WESB	447- 54
62TB4	♦WESB	456- 13
62TB5	♦WESB	462- 5
62TB6	♦WESB	469- 93
62TB7	♦WESB	473- 21
62TB8	♦WESB	478- 79
62TB9	♦WESB	481- 55
62TB10	♦WESB	485- 11
62TB11	♦WESB	487- 17
62TB12	♦WESB	489- 95
62TB13	♦WESB	491- 56
62TB14	♦WESB	492- 81
62TB15	♦WESB	493- 29
62TB16	♦WESB	494- 7
62TB17	♦WESB	494- 41
62TB18	♦WESB	494- 71
62TB19	♦WESB	494- 89
62TB20	♦WESB	494-102
62Z6,A	♦ESMF	186- 91
	MISI	
63Z6,A	ESMF	188-179
	MISI	
64R2	♦ESMF	334- 27
	MISI	
64T4	♦ESMF	432- 30
	MISI	
64Z6,A	♦ESMF	190-162
	MISI	

TYPE No.	MFRS	Pg&Line
65Z6,A	♦ESMF	193- 72
	MISI	
66R2	♦ESMF	351- 40
	MISI	
66R2S	♦ESMF	351- 41
	MISI	
66Z6,A	♦ESMF	195-101
	MISI	
67Z6,A	♦ESMF	196-105
	MISI	
68R2	♦ESMF	363- 82
	MISI	
68R2S	♦ESMF	363- 83
	MISI	
68Z6,A	♦ESMF	198- 74
	MISI	
70BN20	♦WESI	317- 50
70BN30	♦WESI	325- 87
70BN40	♦WESI	336- 73
70BN50	♦WESI	344- 14
70BN60	♦WESI	353- 40
70BN80	♦WESI	365- 52
70BN100	♦WESI	374-102
70BN120	♦WESI	380- 4
70BN140	♦WESI	382- 87
70BN160	♦WESI	386- 88
70BNS	♦WESI	336- 74
70C05B	♦SYN	420- 88
70C10	SYN	428- 32
70C10F	SYN	428- 33
70C15	SYN	431- 35
70C15B	♦SYN	431- 36
70C15BF	SYN	431- 37
70C15F	SYN	431- 38
70C20	SYN	437-109
70C20F	SYN	437-110
70C025	SYN	415- 84
70C025B	♦SYN	415- 85
70C025BF	SYN	415- 86
70C025CF	SYN	415- 87
70C025F	SYN	415- 88
70C25	SYN	441- 56
70C25B	♦SYN	441- 57
70C25BF	SYN	441- 58
70C25F	SYN	441- 59
70C30	SYN	445-110
70C30B	♦SYN	446- 1
70C30BF	SYN	446- 2
70C30F	SYN	446- 3
70C35	SYN	448- 35
70C35B	♦SYN	448- 36
70C35BF	SYN	448- 37
70C35C	SYN	448- 38
70C35CF	SYN	448- 39
70C35F	SYN	448- 40
70C40	SYN	454- 12
70C40F	SYN	454- 13
70C45	SYN	456- 91
70C45B	♦SYN	456- 92
70C45BF	SYN	456- 93
70C45C	SYN	456- 94
70C45CF	SYN	456- 95
70C45F	SYN	456- 96
70C050	SYN	420- 89
70C050B	SYN	420- 90
70C050BF	SYN	420- 91
70C050CF	SYN	420- 92
70C050F	SYN	420- 93
70C50	SYN	460- 43
70C50B	♦SYN	460- 44
70C50BF	SYN	460- 45
70C50F	SYN	460- 46
70C60	SYN	467- 34
70C60F	SYN	467- 35
70C70	SYN	472- 4
70C70B	♦SYN	472- 5
70C70BF	SYN	472- 6
70C70F	SYN	472- 7
70C80	SYN	476- 65
70C80C	SYN	476- 66
70C80F	SYN	476- 67
70C90	SYN	480- 49
70C90B	♦SYN	480- 50
70C90BF	SYN	480- 51
70C90C	SYN	480- 52
70C90CF	SYN	480- 53
70C90F	SYN	480- 54
70C100	SYN	483- 42
70C100C	SYN	483- 43
70C100CF	SYN	483- 44
70C100F	SYN	483- 45
70C110	SYN	486- 40
70C110B	♦SYN	486- 41
70C110BF	SYN	486- 42
70C110C	SYN	486- 43
70C110CF	SYN	486- 44
70C110F	SYN	486- 45
70C120	SYN	488- 54
70C120C	SYN	488- 55
70C120CF	SYN	488- 56
70C120F	SYN	488- 57
70H5	INRB	297- 70
INRC	INRI	
	INRJ	
70H10	INRB	305- 90
INRC	INRI	
	INRJ	
70H10A	INRB	305- 91
INRC	INRI	
	INRJ	
70H15	INRB	308- 69
INRC	INRI	
	INRJ	

TYPE No.	MFRS	Pg&Line
70H15A	INRB	308- 70
INRC	INRI	
	INRJ	
70H20	INRB	317- 33
INRC	INRI	
	INRJ	
70H20A	INRB	317- 34
INRC	INRI	
	INRJ	
70H25	INRB	319- 72
INRC	INRI	
	INRJ	
70H25A	INRB	319- 73
INRC	INRI	
	INRJ	
70H30	INRB	325- 74
INRC	INRI	
	INRJ	
70H30A	INRB	325- 75
INRC	INRI	
	INRJ	
70H40	INRB	336- 55
INRC	INRI	
	INRJ	
70H40A	INRB	336- 56
INRC	INRI	
	INRJ	
70H50	INRB	344- 3
INRC	INRI	
	INRJ	
70H50A	INRB	344- 4
INRC	INRI	
	INRJ	
70H60	INRB	353- 26
INRC	INRI	
	INRJ	
70H60A	INRB	353- 27
INRC	INRI	
	INRJ	
70H70	INRB	357- 78
INRC	INRI	
	INRJ	
70H70A	INRB	357- 79
INRC	INRI	
	INRJ	
70H80	INRB	365- 40
INRC	INRI	
	INRJ	
70H80A	INRB	365- 41
INRC	INRI	
	INRJ	
70H90	INRB	368- 17
INRC	INRI	
	INRJ	
70H90A	INRB	368- 18
INRC	INRI	
	INRJ	
70H100	INRB	374- 93
INRC	INRI	
	INRJ	
70H100A	INRB	374- 94
INRC	INRI	
	INRJ	
70M10	♦INRJ	306- 66
70M15	♦INRJ	309- 5
70M20	♦INRJ	318- 17
70M30	♦INRJ	326- 51
70M40	♦INRJ	337- 58
70M50	♦INRJ	344- 88
70M60	♦INRJ	354- 9
70M80	♦INRJ	366- 13
70M100	♦INRJ	376- 3
70R2S	♦ESMF	373- 65
	MISI	
70S5	INRB	298- 8
INRC	INRI	
	INRJ	
70S10	INRB	306- 72
INRC	INRI	
	INRJ	
70S15	INRB	309- 8
INRC	INRI	
	INRJ	
70S20	INRB	318- 23
INRC	INRI	
	INRJ	
70S25	INRB	319-101
INRC	INRI	
	INRJ	
70S30	INRB	326- 57
INRC	INRI	
	INRJ	
70S35	INRB	327-104
INRC	INRI	
	INRJ	
70S40	INRB	337- 65
INRC	INRI	
	INRJ	
70S45	INRB	338- 66
INRC	INRI	
	INRJ	
70S50	INRB	344- 94
INRC	INRI	
	INRJ	
70S60	INRB	354- 16
INRC	INRI	
	INRJ	
70S70	INRB	358- 21
INRC	INRI	
	INRJ	
70T5△	INRB	298- 9
INRC	INRI	
	INRJ	

TYPE No.	MFRS	Pg&Line
70T10△	INRB	306- 73
INRC	INRI	
	INRJ	
70T15△	INRB	309- 9
INRC	INRI	
	INRJ	
70T20△	INRB	318- 24
INRC	INRI	
	INRJ	
70T25	INRB	319-102
INRC	INRI	
	INRJ	
70T30	INRB	326- 58
INRC	INRI	
	INRJ	
70T35	INRB	327-105
INRC	INRI	
	INRJ	
70T40	INRB	337- 66
INRC	INRI	
	INRJ	
70T45	INRB	338- 67
INRC	INRI	
	INRJ	
70T50	INRB	344- 95
INRC	INRI	
	INRJ	
70T60	INRB	354- 17
INRC	INRI	
	INRJ	
70T70	INRB	358- 22
INRC	INRI	
	INRJ	
70TB1	♦WESB	429- 53
70TB2	♦WESB	439- 97
70TB3	♦WESB	447- 58
70TB4	♦WESB	456- 16
70TB5	♦WESB	462- 8
70TB6	♦WESB	469- 97
70TB7	♦WESB	473- 24
70TB8	♦WESB	478- 82
70TB9	♦WESB	481- 59
70TB10	♦WESB	485- 14
70TB11	♦WESB	487- 20
70TB12	♦WESB	489- 98
70TB13	♦WESB	491- 60
70TB14	♦WESB	492- 83
70TB15	♦WESB	493- 30
70TB16	♦WESB	494- 10
70TB17	♦WESB	494- 42
70TB18	♦WESB	494- 73
70TB19	♦WESB	494- 90
70TB20	♦WESB	494-103
70U15A	INRB	309- 7
INRC	INRI	
	INRJ	
70U25A	INRB	319-100
INRC	INRI	
	INRJ	
70U70A	INRB	358- 18
INRC	INRI	
	INRJ	
70U90A	INRB	368- 56
INRC	INRI	
	INRJ	
71RA50	INRB	460-109
INRC	INRI	
	INRJ	
71RA60	INRB	468- 14
INRC	INRI	
	INRJ	
71RA70	INRB	472- 51
INRC	INRI	
	INRJ	
71RA80	INRB	477- 25
INRC	INRI	
	INRJ	
71RA90	INRB	480- 90
INRC	INRI	
	INRJ	
71RA100	INRB	483- 94
INRC	INRI	
	INRJ	
71RA110	INRB	486- 76
INRC	INRI	
	INRJ	
71RA120	INRB	488- 98
INRC	INRI	
	INRJ	
71RA130	INRB	491- 8
INRC	INRI	
	INRJ	
71RB50	INRB	460-100
INRC	INRI	
	INRJ	
71RB60	INRB	468- 3
INRC	INRI	
	INRJ	
71RB70	INRB	472- 43
INRC	INRI	
	INRJ	
71RB80	INRB	477- 16
INRC	INRI	
	INRJ	
71RB90	INRB	480- 82
INRC	INRI	
	INRJ	
71RB100	INRB	483- 84
INRC	INRI	
	INRJ	
71RB110	INRB	486- 68
INRC	INRI	
	INRJ	

△-Registered with JEDEC by this manufacturer

♦-Copy of mfr's data sheet may be ordered from D.A.T.A.

1. TYPE No. CROSS INDEX

IN TYPE NUMBER SEQUENCE

TYPE No.	MFRS	Pg&Line
71RB120	INRB	488- 91
INRC	INRI	
	INRJ	
71RB130	INRB	491- 2
INRC	INRI	
	INRJ	
71RC2A	INRB	415- 98
INRC	INRI	
	INRJ	
71RC2B	INRB	415-102
INRC	INRI	
	INRJ	
71RC5A	INRB	421- 3
INRC	INRI	
	INRJ	
71RC5B	INRB	421- 9
INRC	INRI	
	INRJ	
71RC10	♦INRJ	428- 72
71RC10A	INRB	428- 66
INRC	INRI	
	INRJ	
71RC10B	INRB	428- 79
INRC	INRI	
	INRJ	
71RC15A	INRB	431- 58
INRC	INRI	
	INRJ	
71RC15B	INRB	431- 64
INRC	INRI	
	INRJ	
71RC20	♦INRJ	438- 53
71RC20A	INRB	438- 47
INRC	INRI	
	INRJ	
71RC20B	INRB	438- 60
INRC	INRI	
	INRJ	
71RC25A	INRB	441- 79
INRC	INRI	
	INRJ	
71RC25B	INRB	441- 85
INRC	INRI	
	INRJ	
71RC30	♦INRJ	446- 56
71RC30A	INRB	446- 50
INRC	INRI	
	INRJ	
71RC30B	INRB	446- 63
INRC	INRI	
	INRJ	
71RC40	♦INRJ	454- 76
71RC40A	INRB	454- 70
INRC	INRI	
	INRJ	
71RC40B	INRB	454- 83
INRC	INRI	
	INRJ	
71RC50	♦INRJ	460-108
71RC50A	INRB	460- 96
INRC	INRI	
	INRJ	
71RC50B	INRB	461- 13
INRC	INRI	
	INRJ	
71RC60	♦INRJ	468- 13
71RC60A	INRB	467-109
INRC	INRI	
	INRJ	
71RC60B	INRB	468- 30
INRC	INRI	
	INRJ	
71RC70A	INRB	472- 41
INRC	INRI	
	INRJ	
71RC80	♦INRJ	477- 24
71RC80A	INRB	477- 14
INRC	INRI	
	INRJ	
71RC100	♦INRJ	483- 93
71RC120	♦INRJ	488- 97
71RCF2A	INRB	415- 99
INRC	INRI	
	INRJ	
71RCF5A	INRB	421- 4
INRC	INRI	
	INRJ	
71RCF10A	INRB	428- 67
INRC	INRI	
	INRJ	
71RCF15A	INRB	431- 59
INRC	INRI	
	INRJ	
71RCF20A	INRB	438- 48
INRC	INRI	
	INRJ	
71RCF25A	INRB	441- 80
INRC	INRI	
	INRJ	
71RCF30A	INRB	446- 51
INRC	INRI	
	INRJ	
71RCF40A	INRB	454- 71
INRC	INRI	
	INRJ	
71RCF50A	INRB	460- 97
INRC	INRI	
	INRJ	
71RCF60A	INRB	467-110
INRC	INRI	
	INRJ	
71RCG5	INRB	421- 7
INRC	INRI	
	INRJ	

TYPE No.	MFRS	Pg&Line
71RCG10	INRB	428- 70
INRC	INRI	
	INRJ	
71RCG15	INRB	431- 62
INRC	INRI	
	INRJ	
71RCG20	INRB	438- 51
INRC	INRI	
	INRJ	
71RCG25	INRB	441- 83
INRC	INRI	
	INRJ	
71RCG30	INRB	446- 54
INRC	INRI	
	INRJ	
71RCG40	INRB	454- 74
INRC	INRI	
	INRJ	
71RCG50	INRB	460-106
INRC	INRI	
	INRJ	
71RCG60	INRB	468- 11
INRC	INRI	
	INRJ	
71REA60	INRB	468- 15
INRC	INRI	
	INRJ	
71REA70	INRB	472- 52
INRC	INRI	
	INRJ	
71REA80	INRB	477- 26
INRC	INRI	
	INRJ	
71REA90	INRB	480- 91
INRC	INRI	
	INRJ	
71REA100	INRB	483- 95
INRC	INRI	
	INRJ	
71REA110	INRB	486- 77
INRC	INRI	
	INRJ	
71REA120	INRB	488- 99
INRC	INRI	
	INRJ	
71REA130	INRB	491- 9
INRC	INRI	
	INRJ	
71REB60	INRB	468- 4
INRC	INRI	
	INRJ	
71REB70	INRB	472- 44
INRC	INRI	
	INRJ	
71REB80	INRB	477- 17
INRC	INRI	
	INRJ	
71REB90	INRB	480- 83
INRC	INRI	
	INRJ	
71REB100	INRB	483- 85
INRC	INRI	
	INRJ	
71REB110	INRB	486- 69
INRC	INRI	
	INRJ	
71REB120	INRB	488- 92
INRC	INRI	
	INRJ	
71REB130	INRB	491- 3
INRC	INRI	
	INRJ	
71REH60	INRB	468- 52
INRC	INRI	
	INRJ	
71REH70	INRB	472- 70
INRC	INRI	
	INRJ	
71REH80	INRB	477- 52
INRC	INRI	
	INRJ	
71REH90	INRB	480-109
INRC	INRI	
	INRJ	
71REH100	INRB	484- 17
INRC	INRI	
	INRJ	
71REH110	INRB	486- 86
INRC	INRI	
	INRJ	
71REH120	INRB	489- 11
INRC	INRI	
	INRJ	
71REH130	INRB	491- 21
INRC	INRI	
	INRJ	
71REJ60	INRB	468- 47
INRC	INRI	
	INRJ	
71REJ70	INRB	472- 65
INRC	INRI	
	INRJ	
71REJ80	INRB	477- 47
INRC	INRI	
	INRJ	
71REJ90	INRB	480-104
INRC	INRI	
	INRJ	
71REJ100	INRB	484- 12
INRC	INRI	
	INRJ	
71REJ110	INRB	486- 81
INRC	INRI	
	INRJ	

TYPE No.	MFRS	Pg&Line
71REJ120	INRB	489- 6
INRC	INRI	
	INRJ	
71REJ130	INRB	491- 16
INRC	INRI	
	INRJ	
71TB1	♦WESB	429- 58
71TB2	♦WESB	439-102
71TB3	♦WESB	447- 63
71TB4	♦WESB	456- 22
71TB5	♦WESB	462- 14
71TB6	♦WESB	469-106
71TB7	♦WESB	473- 27
71TB8	♦WESB	478- 90
71TB9	♦WESB	481- 62
71TB10	♦WESB	485- 22
71TB11	♦WESB	487- 25
71TB12	♦WESB	489-105
71TB13	♦WESB	491- 64
71TB14	♦WESB	492- 85
71TB15	♦WESB	493- 31
71TB16	♦WESB	494- 11
71TB17	♦WESB	494- 43
71TB18	♦WESB	494- 74
71TB19	♦WESB	494- 91
71TB20	♦WESB	494-104
71Z6,A	♦ESMF	167- 87
	MISI	
72R2S	ESMF	379- 42
	MISI	
72RA50	INRB	460-110
INRC	INRI	
	INRJ	
72RA60	INRB	468- 16
INRC	INRI	
	INRJ	
72RA70	INRB	472- 53
INRC	INRI	
	INRJ	
72RA80	INRB	477- 27
INRC	INRI	
	INRJ	
72RA90	INRB	480- 92
INRC	INRI	
	INRJ	
72RA100	INRB	483- 96
INRC	INRI	
	INRJ	
72RA110	INRB	486- 78
INRC	INRI	
	INRJ	
72RA120	INRB	488-100
INRC	INRI	
	INRJ	
72RA130	INRB	491- 10
INRC	INRI	
	INRJ	
72RB50	INRB	460-101
INRC	INRI	
	INRJ	
72RB60	INRB	468- 5
INRC	INRI	
	INRJ	
72RB70	INRB	472- 45
INRC	INRI	
	INRJ	
72RB80	INRB	477- 18
INRC	INRI	
	INRJ	
72RB90	INRB	480- 84
INRC	INRI	
	INRJ	
72RB100	INRB	483- 86
INRC	INRI	
	INRJ	
72RB110	INRB	486- 70
INRC	INRI	
	INRJ	
72RB120	INRB	488- 93
INRC	INRI	
	INRJ	
72RB130	INRB	491- 4
INRC	INRI	
	INRJ	
72RC2A	INRB	415-100
INRC	INRI	
	INRJ	
72RC2B	INRB	415-103
INRC	INRI	
	INRJ	
72RC5A	INRB	421- 5
INRC	INRI	
	INRJ	
72RC5B	INRB	421- 10
INRC	INRI	
	INRJ	
72RC10A	INRB	428- 68
INRC	INRI	
	INRJ	
72RC10B	INRB	428- 80
INRC	INRI	
	INRJ	
72RC15A	INRB	431- 60
INRC	INRI	
	INRJ	
72RC15B	INRB	431- 65
INRC	INRI	
	INRJ	
72RC20A	INRB	438- 49
INRC	INRI	
	INRJ	
72RC20B	INRB	438- 61
INRC	INRI	
	INRJ	

TYPE No.	MFRS	Pg&Line
72RC25A	INRB	441- 81
INRC	INRI	
	INRJ	
72RC25B	INRB	441- 86
INRC	INRI	
	INRJ	
72RC30A	INRB	446- 52
INRC	INRI	
	INRJ	
72RC30B	INRB	446- 64
INRC	INRI	
	INRJ	
72RC40A	INRB	454- 72
INRC	INRI	
	INRJ	
72RC40B	INRB	454- 84
INRC	INRI	
	INRJ	
72RC50A	INRB	460- 98
INRC	INRI	
	INRJ	
72RC50B	INRB	461- 14
INRC	INRI	
	INRJ	
72RC60A	INRB	468- 1
INRC	INRI	
	INRJ	
72RC60B	INRB	468- 31
INRC	INRI	
	INRJ	
72RC70A	INRB	472- 42
INRC	INRI	
	INRJ	
72RC80A	INRB	477- 15
INRC	INRI	
	INRJ	
72RCF2A	INRB	415-101
INRC	INRI	
	INRJ	
72RCF5A	INRB	421- 6
INRC	INRI	
	INRJ	
72RCF10A	INRB	428- 69
INRC	INRI	
	INRJ	
72RCF15A	INRB	431- 61
INRC	INRI	
	INRJ	
72RCF20A	INRB	438- 50
INRC	INRI	
	INRJ	
72RCF25A	INRB	441- 82
INRC	INRI	
	INRJ	
72RCF30A	INRB	446- 53
INRC	INRI	
	INRJ	
72RCF40A	INRB	454- 73
INRC	INRI	
	INRJ	
72RCF50A	INRB	460- 99
INRC	INRI	
	INRJ	
72RCF60A	INRB	468- 2
INRC	INRI	
	INRJ	
72RCG5	INRB	421- 8
INRC	INRI	
	INRJ	
72RCG10	INRB	428- 71
INRC	INRI	
	INRJ	
72RCG15	INRB	431- 63
INRC	INRI	
	INRJ	
72RCG20	INRB	438- 52
INRC	INRI	
	INRJ	
72RCG25	INRB	441- 84
INRC	INRI	
	INRJ	
72RCG30	INRB	446- 55
INRC	INRI	
	INRJ	
72RCG40	INRB	454- 75
INRC	INRI	
	INRJ	
72RCG50	INRB	460-107
INRC	INRI	
	INRJ	
72RCG60	INRB	468- 12
INRC	INRI	
	INRJ	
72RE60	INRB	467- 98
INRC	INRI	
	INRJ	
72RE60A	INRB	467- 99
INRC	INRI	
	INRJ	
72RE70	INRB	472- 35
INRC	INRI	
	INRJ	
72RE70A	INRB	472- 36
INRC	INRI	
	INRJ	
72RE80	INRB	477- 8
INRC	INRI	
	INRJ	
72RE80A	INRB	477- 9
INRC	INRI	
	INRJ	
72RE90	INRB	480- 77
INRC	INRI	
	INRJ	

TYPE No.	MFRS	Pg&Line
72RE90A	INRB	480- 78
INRC	INRI	
	INRJ	
72RE100	INRB	483- 81
INRC	INRI	
	INRJ	
72RE100A	INRB	483- 82
INRC	INRI	
	INRJ	
72RE110	INRB	486- 66
INRC	INRI	
	INRJ	
72RE110A	INRB	486- 67
INRC	INRI	
	INRJ	
72RE120	INRB	488- 89
INRC	INRI	
	INRJ	
72RE120A	INRB	488- 90
INRC	INRI	
	INRJ	
72RE130	INRB	490-107
INRC	INRI	
	INRJ	
72RE130A	INRB	491- 1
INRC	INRI	
	INRJ	
72REA60	INRB	468- 17
INRC	INRI	
	INRJ	
72REA70	INRB	472- 54
INRC	INRI	
	INRJ	
72REA80	INRB	477- 28
INRC	INRI	
	INRJ	
72REA90	INRB	480- 93
INRC	INRI	
	INRJ	
72REA100	INRB	483- 97
INRC	INRI	
	INRJ	
72REA110	INRB	486- 79
INRC	INRI	
	INRJ	
72REA120	INRB	488-101
INRC	INRI	
	INRJ	
72REA130	INRB	491- 11
INRC	INRI	
	INRJ	
72REB60	INRB	468- 6
INRC	INRI	
	INRJ	
72REB70	INRB	472- 46
INRC	INRI	
	INRJ	
72REB80	INRB	477- 19
INRC	INRI	
	INRJ	
72REB90	INRB	480- 85
INRC	INRI	
	INRJ	
72REB100	INRB	483- 87
INRC	INRI	
	INRJ	
72REB110	INRB	486- 71
INRC	INRI	
	INRJ	
72REB120	INRB	488- 94
INRC	INRI	
	INRJ	
72REB130	INRB	491- 5
INRC	INRI	
	INRJ	
72REH60	INRB	468- 53
INRC	INRI	
	INRJ	
72REH70	INRB	472- 71
INRC	INRI	
	INRJ	
72REH80	INRB	477- 53
INRC	INRI	
	INRJ	
72REH90	INRB	480-110
INRC	INRI	
	INRJ	
72REH100	INRB	484- 18
INRC	INRI	
	INRJ	
72REH110	INRB	486- 87
INRC	INRI	
	INRJ	
72REH120	INRB	489- 12
INRC	INRI	
	INRJ	
72REH130	INRB	491- 22
INRC	INRI	
	INRJ	
72REJ60	INRB	468- 48
INRC	INRI	
	INRJ	
72REJ70	INRB	472- 66
INRC	INRI	
	INRJ	
72REJ80	INRB	477- 48
INRC	INRI	
	INRJ	
72REJ90	INRB	480-105
INRC	INRI	
	INRJ	
72REJ100	INRB	484- 13
INRC	INRI	
	INRJ	

Δ-Registered with JEDEC by this manufacturer

♦-Copy of mfr's data sheet may be ordered from D.A.T.A.

1. TYPE No. CROSS INDEX

IN TYPE NUMBER SEQUENCE

TYPE No.	MFRS	Pg&Line
72REJ110	INRB	486 - 82
INRC	INRI	
	INRJ	
72REJ120	INRB	489 - 7
INRC	INRI	
	INRJ	
72REJ130	INRB	491 - 17
INRC	INRI	
	INRJ	
72Z6,A	♦ESMF	168 - 49
	MISI	
73TB1	♦WESB	429 - 61
73TB2	♦WESB	439 -107
73TB3	♦WESB	447 - 67
73TB4	♦WESB	456 - 30
73TB5	♦WESB	462 - 22
73TB6	♦WESB	470 - 7
73TB7	♦WESB	473 - 31
73TB8	♦WESB	478 -100
73TB9	♦WESB	481 - 64
73TB10	♦WESB	485 - 33
73TB11	♦WESB	487 - 27
73TB12	♦WESB	490 - 5
73TB13	♦WESB	491 - 68
73TB14	♦WESB	492 - 88
73TB15	♦WESB	493 - 32
73TB16	♦WESB	494 - 14
73TB17	♦WESB	494 - 44
73TB18	♦WESB	494 - 77
73TB19	♦WESB	494 - 92
73TB20	♦WESB	494 -107
73Z6,A	♦ESMF	169 - 18
	MISI	
74TB1	♦WESB	429 - 64
74TB2	♦WESB	440 - 3
74TB3	♦WESB	447 - 74
74TB4	♦WESB	456 - 36
74TB5	♦WESB	462 - 27
74TB6	♦WESB	470 - 15
74TB7	♦WESB	473 - 35
74TB8	♦WESB	478 -109
74TB9	♦WESB	481 - 70
74TB10	♦WESB	485 - 41
74TB11	♦WESB	487 - 32
74TB12	♦WESB	490 - 13
74TB13	♦WESB	491 - 73
74TB14	♦WESB	492 - 95
74TB15	♦WESB	493 - 36
74Z6,A	♦ESMF	170 - 13
	MISI	
75E05	AMD	297 - 77
75E10	AMD	305 -100
75E15	AMD	308 - 74
75E20	AMD	317 - 43
75E30	AMD	325 - 82
75E40	AMD	336 - 64
75E50	AMD	344 - 10
75E60	AMD	353 - 34
75E70	AMD	357 - 82
75E80	AMD	365 - 45
75E90	AMD	368 - 19
75E100	AMD	374 - 97
75F05	AMD	297 - 78
75F10	AMD	305 -101
75F15	AMD	308 - 75
75F20	AMD	317 - 44
75F30	AMD	325 - 83
75F40	AMD	336 - 65
75F50	AMD	344 - 11
75F60	AMD	353 - 35
75F70	AMD	357 - 83
75F80	AMD	365 - 46
75F90	AMD	368 - 20
75F100	AMD	374 - 98
75R1B	EDL	299 -110
75R2B	EDL	310 - 83
75R3B	EDL	321 - 8
75R4B	EDL	329 - 53
75R5B	EDL	339 - 93
75R6B	EDL	346 - 87
75R7B	EDL	355 - 42
75R8B	EDL	359 - 98
75R9B	EDL	367 - 7
75R10B	EDL	370 - 38
75R11B	EDL	376 - 32
75R12B	EDL	377 - 99
75R13B	EDL	381 - 31
75R14B	EDL	382 - 10
75R15B	EDL	384 - 71
75R16B	EDL	386 - 12
75R18B	EDL	388 - 14
75R20B	EDL	390 - 15
75R22B	EDL	391 - 17
75R24B	EDL	391 - 84
75R26B	EDL	392 - 94
75R28B	EDL	393 - 30
75R30B	EDL	394 - 59
75R32B	EDL	395 - 13
75R34B	EDL	395 - 32
75R36B	EDL	395 -109
75R38B	EDL	396 - 26
75R40B	EDL	397 - 40
75R42B	EDL	397 - 80
75R44B	EDL	397 - 98
75R46B	EDL	398 - 42
75R48B	EDL	398 - 67
75R50B	EDL	399 - 99
75TE3.9,A	TRI	169 - 16
75TE4 7,A	TRI	171 - 24
75TE5.6,A	TRI	173 -143
75TE6.8,A	TRI	178 -141
75TE8 2,A	TRI	183 - 59
75TE10,A	TRI	189 - 84
75TE12,A	TRI	193 -179

TYPE No.	MFRS	Pg&Line
75TE15,A	TRI	198 -182
75TE18,A	TRI	203 - 82
75TE22,A	TRI	208 - 4
75TE27,A	TRI	212 - 72
75TE33,A	TRI	216 - 27
75TE39,A	TRI	218 -185
75TE47,A	TRI	222 - 23
75TE56,A	TRI	225 - 67
75Z6,A	♦ESMF	171 - 26
	MISI	
76Z6,A	♦ESMF	172 - 57
	MISI	
77Z6,A	♦ESMF	173 -144
	MISI	
78Z6,A	♦ESMF	175 -122
	MISI	
79Z6,A	♦ESMF	178 -144
	MISI	
80AS	AEIL	359 - 52
80H3	SAR	363 - 32
80L15	EDL	384 - 77
80L20	EDL	390 - 17
80L25	EDL	392 - 64
80L30	EDL	394 - 63
80L35	EDL	395 - 84
80L40	EDL	397 - 42
80L45	EDL	398 - 37
80L50	EDL	399 -101
80L55	EDL	400 - 57
80L60	EDL	401 - 54
80L65	EDL	401 -103
80L70	EDL	402 - 59
80L75	EDL	403 - 14
80L80	EDL	403 -108
80L85	EDL	404 - 44
80L90	EDL	404 - 92
80L95	EDL	405 - 14
80L100	EDL	406 - 30
80L110	EDL	406 - 82
80L120	EDL	407 - 47
80L130	EDL	407 - 73
80L140	EDL	407 -107
80L150	EDL	408 - 70
80L159	EDL	384 - 78
80L160	EDL	409 - 21
80L170	EDL	409 - 38
80L180	EDL	409 - 65
80L190	EDL	409 - 85
80L200	EDL	410 - 40
80L209	EDL	390 - 18
80L210	EDL	410 - 61
80L220	EDL	410 - 77
80L230	EDL	410 - 90
80L240	EDL	410 -105
80L250	EDL	411 - 46
80L259	EDL	392 - 65
80L260	EDL	411 - 68
80L270	EDL	411 - 80
80L280	EDL	411 - 94
80L290	EDL	411 -106
80L300	EDL	412 - 43
80L309	EDL	394 - 64
80L359	EDL	395 - 85
80L409	EDL	397 - 43
80L459	EDL	398 - 38
80L509	EDL	399 -102
80L559	EDL	400 - 58
80L609	EDL	401 - 55
80L659	EDL	401 -104
80L709	EDL	402 - 60
80L759	EDL	403 - 15
80L809	EDL	404 - 1
80L859	EDL	404 - 45
80L909	EDL	404 - 93
80L959	EDL	405 - 15
80L1009	EDL	406 - 31
80TB1	♦WESB	429 - 76
80TB2	♦WESB	440 - 18
80TB3	♦WESB	447 - 88
80TB4	♦WESB	456 - 53
80TB5	♦WESB	462 - 45
80TB6	♦WESB	470 - 35
80TB7	♦WESB	473 - 46
80TB8	♦WESB	479 - 14
80TB9	♦WESB	481 - 79
80TB10	♦WESB	485 - 56
80TB11	♦WESB	487 - 41
80TB12	♦WESB	490 - 25
80TB13	♦WESB	491 - 77
80TB14	♦WESB	492 -100
80TB15	♦WESB	493 - 38
80TF3 9,A	TRI	169 - 24
80TF4.7,A	TRI	171 - 32
80TF5 6,A	TRI	173 -150
80TF6.8,A	TRI	178 -156
80TF8 2,A	TRI	183 - 71
80TF10,A	TRI	189 - 96
80TF12,A	TRI	193 -189
80TF15,A	TRI	198 -192
80TF18,A	TRI	203 - 84
80TF22,A	TRI	208 - 6
80TF27,A	TRI	212 - 74
80TF33,A	TRI	216 - 29
80TF39,A	TRI	218 -187
80TF47,A	TRI	222 - 25
80TF56,A	TRI	225 - 69
80Z6,A	♦ESMF	180 -185
	MISI	
81TB1	♦WESB	429 - 79
81TB2	♦WESB	440 - 20
81TB3	♦WESB	447 - 91
81TB4	♦WESB	456 - 56
81TB5	♦WESB	462 - 48
81TB6	♦WESB	470 - 38

TYPE No.	MFRS	Pg&Line
81TB7	♦WESB	473 - 49
81TB8	♦WESB	479 - 17
81TB9	♦WESB	481 - 82
81TB10	♦WESB	485 - 59
81TB11	♦WESB	487 - 44
81TB12	♦WESB	490 - 28
81TB13	♦WESB	491 - 80
81TB14	♦WESB	492 -102
81TB15	♦WESB	493 - 40
81Z6,A	♦ESMF	183 - 60
	MISI	
82Z6,A	♦ESMF	186 -168
	MISI	
83Z6,A	♦ESMF	189 - 81
	MISI	
84TB1	♦WESB	429 - 81
84TB2	♦WESB	440 - 22
84TB3	♦WESB	447 - 93
84TB4	♦WESB	456 - 58
84TB5	♦WESB	462 - 53
84TB6	♦WESB	470 - 43
84TB7	♦WESB	473 - 54
84TB8	♦WESB	479 - 24
84Z6,A	♦ESMF	191 - 51
	MISI	
85P1	♦ESMF	272 - 67
	MISI	
85Z6,A	♦ESMF	193 -174
	MISI	
86Z6,A	♦ESMF	195 -187
	MISI	
87Z6,A	♦ESMF	196 -152
	MISI	
88Z6,A	♦ESMF	198 -176
	MISI	
91TB1	♦WESB	429 - 82
91TB2	♦WESB	440 - 23
91TB3	♦WESB	447 - 96
91TB4	♦WESB	456 - 61
91TB5	♦WESB	462 - 56
91TB6	♦WESB	470 - 46
94TB1	♦WESB	429 - 85
94TB2	♦WESB	440 - 26
94TB3	♦WESB	447 -100
94TB4	♦WESB	456 - 66
94TB5	♦WESB	462 - 60
0100	EBRG	254 - 50
100AC40	♦INRB	506 - 95
♦INRC	♦INRI	
	♦INRJ	
100AC60	♦INRB	508 - 67
♦INRC	♦INRI	
	♦INRJ	
100AC80	♦INRB	509 - 13
♦INRC	♦INRI	
	♦INRJ	
100AC100	♦INRB	509 - 22
♦INRC	♦INRI	
	♦INRJ	
100C10	SYN	428 - 53
100C10B	SYN	428 - 54
100C15	SYN	431 - 53
100C15B	SYN	431 - 54
100C20	SYN	438 - 34
100C20B	SYN	438 - 35
100C025	SYN	415 - 93
100C025B	SYN	415 - 94
100C25	SYN	441 - 74
100C25B	SYN	441 - 75
100C30	SYN	446 - 32
100C30B	SYN	446 - 33
100C35	SYN	448 - 43
100C35B	SYN	448 - 44
100C40	SYN	454 - 55
100C40B	SYN	454 - 56
100C45	SYN	456 - 97
100C45B	SYN	456 - 98
100C050	SYN	420 -103
100C050B	SYN	420 -104
100C50	SYN	460 - 78
100C50B	SYN	460 - 79
100C60	SYN	467 - 85
100C60B	SYN	467 - 86
100C70	SYN	472 - 32
100C70B	SYN	472 - 33
100C80	SYN	477 - 2
100C80B	SYN	477 - 3
100C90	SYN	480 - 71
100C90B	SYN	480 - 72
100C100	SYN	483 - 75
100C100B	SYN	483 - 76
100C110	SYN	486 - 63
100C110B	SYN	486 - 64
100C120	SYN	488 - 82
100C120B	SYN	488 - 83
100E05	AMD	297 - 84
100E10	AMD	306 - 10
100E15	AMD	308 - 82
100E20	AMD	317 - 65
100E30	AMD	325 -103
100E40	AMD	336 - 91
100E50	AMD	344 - 28
100E60	AMD	353 - 53
100E70	AMD	357 - 88
100E80	AMD	365 - 62
100E90	AMD	368 - 23
100E100	AMD	375 - 2
100F05	AMD	297 - 85
100F10	AMD	306 - 11
100F15	AMD	308 - 83
100F20△	AMD	317 - 66
100F20☑	♦SCO	289 - 3
100F30	AMD	325 -104
100F30△	AMD	325 -105

TYPE No.	MFRS	Pg&Line
100F30☑	♦SCO	289 - 33
100F40	AMD	336 - 92
100F40△	AMD	336 - 93
100F40☑	♦SCO	289 - 57
100F50	AMD	344 - 29
100F50△	AMD	344 - 30
100F50☑	♦SCO	289 - 82
100F60	AMD	353 - 54
100F70	AMD	357 - 89
100F80	AMD	365 - 63
100F90	AMD	368 - 24
100F100	AMD	375 - 3
100K10	PPC	369 - 35
100K20	PPC	389 - 49
100K30	PPC	393 - 99
100KF10	PPC	288 - 26
100KF20	PPC	289 - 5
100KF30	PPC	289 - 35
100L15	EDL	384 - 83
100L20	EDL	390 - 22
100L25	EDL	392 - 66
100L30	EDL	394 - 66
100L35	EDL	395 - 86
100L40	EDL	397 - 44
100L45	EDL	398 - 39
100L50	EDL	399 -103
100L55	EDL	400 - 59
100L60	EDL	401 - 56
100L65	EDL	401 -105
100L70	EDL	402 - 61
100L75	EDL	403 - 18
100L80	EDL	404 - 2
100L85	EDL	404 - 46
100L90	EDL	404 - 94
100L95	EDL	405 - 16
100L100	EDL	406 - 32
100L110	EDL	406 - 84
100L120	EDL	407 - 50
100L130	EDL	407 - 74
100L140	EDL	407 -108
100L150	EDL	408 - 73
100L159	EDL	384 - 84
100L160	EDL	409 - 22
100L170	EDL	409 - 39
100L180	EDL	409 - 66
100L190	EDL	409 - 86
100L200	EDL	410 - 41
100L209	EDL	390 - 23
100L210	EDL	410 - 62
100L220	EDL	410 - 78
100L230	EDL	410 - 91
100L240	EDL	410 -106
100L250	EDL	411 - 47
100L259	EDL	392 - 67
100L260	EDL	411 - 69
100L270	EDL	411 - 81
100L280	EDL	411 - 95
100L290	EDL	411 -107
100L300	EDL	412 - 44
100L309	EDL	394 - 67
100L359	EDL	395 - 87
100L409	EDL	397 - 45
100L459	EDL	398 - 40
100L509	EDL	399 -104
100L559	EDL	400 - 60
100L609	EDL	401 - 57
100L659	EDL	401 -106
100L709	EDL	402 - 62
100L759	EDL	403 - 19
100L809	EDL	404 - 3
100L859	EDL	404 - 47
100L909	EDL	404 - 95
100L959	EDL	405 - 17
100L1009	EDL	406 - 33
100R1B	EDL	300 - 70
100R2B	EDL	311 - 55
100R3B	EDL	321 - 75
100R4B	EDL	330 - 37
100R5B	EDL	340 - 47
100R6B	EDL	347 - 67
100R7B	EDL	355 - 68
100R8B	EDL	360 - 51
100R9B	EDL	367 - 8
100R10B	EDL	370 - 94
100R11B	EDL	376 - 36
100R12B	EDL	378 - 20
100R13B	EDL	381 - 32
100R14B	EDL	382 - 16
100R15B	EDL	384 - 85
100R16B	EDL	386 - 23
100R18B	EDL	388 - 22
100R20B	EDL	390 - 24
100R22B	EDL	391 - 18
100R24B	EDL	391 - 86
100R26B	EDL	392 - 95
100R28B	EDL	393 - 31
100R30B	EDL	394 - 68
100R32B	EDL	395 - 14
100R34B	EDL	395 - 33
100R36B	EDL	396 - 1
100R38B	EDL	396 - 27
100R40B	EDL	397 - 46
100R42B	EDL	397 - 81
100R44B	EDL	397 - 99
100R46B	EDL	398 - 44
100R48B	EDL	398 - 68
100R50B	EDL	399 -105
100S20	♦SCO	389 - 59
100S30	♦SCO	393 -107
100S40	♦SCO	396 - 86
100S50	♦SCO	399 - 37
0101	EBRG	255 - 97
101B6	GELC	247 - 29
101F12S	NECJ	380 - 5

TYPE No.	MFRS	Pg&Line
101KL20S15	INRB	283 - 44
INRC	INRI	
	INRJ	
101KL20S20	INRB	283 - 49
INRC	INRI	
	INRJ	
101KL40S15	INRB	285 - 94
INRC	INRI	
	INRJ	
101KL40S20	INRB	285 - 99
INRC	INRI	
	INRJ	
101KL60S15	INRB	287 - 43
INRC	INRI	
	INRJ	
101KL60S20	INRB	287 - 49
INRC	INRI	
	INRJ	
101KL80S15	INRB	287 -100
INRC	INRI	
	INRJ	
101KL80S20	INRB	287 -106
INRC	INRI	
	INRJ	
101KL100S15	INRB	288 - 48
INRC	INRI	
	INRJ	
101KL100S20	INRB	288 - 53
INRC	INRI	
	INRJ	
101KL120S20	INRB	288 - 75
INRC	INRI	
	INRJ	
101KL130S20	INRB	288 - 82
INRC	INRI	
	INRJ	
101R1S	NECJ	305 -106
101R2S	NECJ	317 - 51
101R3S	NECJ	325 - 90
101R4S	NECJ	336 - 76
101RA50	INRB	461 - 48
INRC	INRI	
	INRJ	
101RA60	INRB	468 - 95
INRC	INRI	
	INRJ	
101RA70	INRB	472 - 86
INRC	INRI	
	INRJ	
101RA80	INRB	477 - 91
INRC	INRI	
	INRJ	
101RA90	INRB	481 - 18
INRC	INRI	
	INRJ	
101RA100	INRB	484 - 42
INRC	INRI	
	INRJ	
101RA110	INRB	486 - 97
INRC	INRI	
	INRJ	
101RA120	INRB	489 - 26
INRC	INRI	
	INRJ	
101RA130	INRB	491 - 29
INRC	INRI	
	INRJ	
101RC5	INRB	421 - 22
INRC	INRI	
	INRJ	
101RC10	INRB	428 -106
INRC	INRI	
	♦INRJ	
101RC15	INRB	431 - 76
INRC	INRI	
	INRJ	
101RC20	INRB	439 - 6
INRC	INRI	
	♦INRJ	
101RC25	INRB	441 - 96
INRC	INRI	
	INRJ	
101RC30	INRB	446 - 99
INRC	INRI	
	♦INRJ	
101RC40	INRB	455 - 30
INRC	INRI	
	♦INRJ	
101RC50	INRB	461 - 49
INRC	INRI	
	♦INRJ	
101RC60	INRB	468 - 96
INRC	INRI	
	♦INRJ	
101RC70	INRB	472 - 87
INRC	INRI	
	INRJ	
101RC80	INRB	477 - 92
INRC	INRI	
	♦INRJ	
101RC100	♦INRJ	484 - 44
101RC120	♦INRJ	489 - 28
101RE60	INRB	468 - 97
INRC	INRI	
	INRJ	
101RE70	INRB	472 - 88
INRC	INRI	
	INRJ	
101RE80	INRB	477 - 93
INRC	INRI	
	INRJ	
101RE90	INRB	481 - 19
INRC	INRI	
	INRJ	

△-Registered with JEDEC by this manufacturer

♦-Copy of mfr's data sheet may be ordered from D.A.T.A.

1. TYPE No. CROSS INDEX

IN TYPE NUMBER SEQUENCE

TYPE No.	MFRS	Pg&Line
101RE100	INRB	484 - 43
INRC	INRI	
	INRJ	
101RE110	INRB	486 - 98
INRC	INRI	
	INRJ	
101RE120	INRB	489 - 27
INRC	INRI	
	INRJ	
101RE130	INRB	491 - 30
INRC	INRI	
	INRJ	
0102	EBRG	258 - 35
102B6	GELC	248 - 28
103B6	GELC	249 - 19
104B6	GELC	250 - 29
105B6	GELC	252 - 99
106B6	GELC	254 -100
107B6	GELC	257 - 45
108B6	GELC	258 - 37
109B6	GELC	259 - 1
0110	EBRG	254 - 51
110B6	GELC	259 - 58
110C	♦ CRL	579 -100
0111	EBRG	256 - 50
0112	EBRG	258 - 36
0114	EBRG	259 - 92
115PA50	INRB	461 - 50
INRC	INRI	
	INRJ	
115PA60	INRB	468 - 98
INRC	INRI	
	INRJ	
115PA80	INRB	477 - 94
INRC	INRI	
	INRJ	
115PA100	INRB	484 - 45
INRC	INRI	
	INRJ	
115PA110	INRB	486 - 99
INRC	INRI	
	INRJ	
115PA120	INRB	489 - 29
INRC	INRI	
	INRJ	
115PA130	INRB	491 - 31
INRC	INRI	
	INRJ	
125BN20	♦ WESI	317 - 73
125BN30	♦ WESI	326 - 1
125BN40	♦ WESI	336 -100
125BN50	♦ WESI	344 - 39
125BN60	♦ WESI	353 - 64
125BN80	♦ WESI	365 - 72
125BN100	♦ WESI	375 - 11
125BN120	♦ WESI	380 - 20
125BN140	♦ WESI	382 - 95
125BN160	♦ WESI	386 - 96
125BNS	♦ WESI	336 -101
150C10	SYN	428 -104
150C10B	SYN	428 -105
150C15	SYN	431 - 74
150C15B	SYN	431 - 75
150C20	SYN	439 - 4
150C20B	SYN	439 - 5
150C025	SYN	415 -108
150C025B	SYN	415 -109
150C25	SYN	441 - 94
150C25B	SYN	441 - 95
150C30	SYN	446 - 97
150C30B	SYN	446 - 98
150C35	SYN	448 - 45
150C35B	SYN	448 - 46
150C40	SYN	455 - 28
150C40B	SYN	455 - 29
150C45	SYN	456 - 99
150C45B	SYN	456 -100
150C050	SYN	421 - 20
150C050B	SYN	421 - 21
150C50	SYN	461 - 46
150C50B	SYN	461 - 47
150C60	SYN	468 - 93
150C60B	SYN	468 - 94
150C70	SYN	472 - 84
150C70B	SYN	472 - 85
150C80	SYN	477 - 89
150C80B	SYN	477 - 90
150C90	SYN	481 - 16
150C90B	SYN	481 - 17
150C100	SYN	484 - 40
150C100B	SYN	484 - 41
150C110	SYN	486 - 95
150C110B	SYN	486 - 96
150C120	SYN	489 - 24
150C120B	SYN	489 - 25
150K10A	INRB	306 - 27
INRC	INRI	
	INRJ	
150K15A	INRB	308 - 91
INRC	INRI	
	INRJ	
150K20A	INRB	317 - 86
INRC	INRI	
	INRJ	
150K25A	INRB	319 - 86
INRC	INRI	
	INRJ	
150K30A	INRB	326 - 11
INRC	INRI	
	INRJ	
150K40A	INRB	337 - 7
INRC	INRI	
	INRJ	

TYPE No.	MFRS	Pg&Line
150K50A	INRB	344 - 50
INRC	INRI	
	INRJ	
150K60A	INRB	353 - 80
INRC	INRI	
	INRJ	
150K70A	INRB	357 -104
INRC	INRI	
	INRJ	
150K80A	INRB	365 - 89
INRC	INRI	
	INRJ	
150K90A	INRB	368 - 37
INRC	INRI	
	INRJ	
150K100A	INRB	375 - 27
INRC	INRI	
	INRJ	
150K120A	INRB	380 - 32
INRC	INRI	
	INRJ	
150K140A	INRB	382 -105
INRC	INRI	
	INRJ	
150L10A	INRB	306 - 12
INRC	INRI	
	INRJ	
150L15A	INRB	308 - 84
INRC	INRI	
	INRJ	
150L20A	INRB	317 - 67
INRC	INRI	
	INRJ	
150L25A	INRB	319 - 82
INRC	INRI	
	INRJ	
150L30A	INRB	325 -106
INRC	INRI	
	INRJ	
150L40A	INRB	336 - 94
INRC	INRI	
	INRJ	
150L50A	INRB	344 - 31
INRC	INRI	
	INRJ	
150L60A	INRB	353 - 55
INRC	INRI	
	INRJ	
150L70A	INRB	357 - 90
INRC	INRI	
	INRJ	
150L80A	INRB	365 - 64
INRC	INRI	
	INRJ	
150L90A	INRB	368 - 25
INRC	INRI	
	INRJ	
150L100A	INRB	375 - 4
INRC	INRI	
	INRJ	
150L120A	INRB	380 - 14
INRC	INRI	
	INRJ	
150L140A	INRB	382 -106
INRC	INRI	
	INRJ	
150MA60	♦ INRJ	354 - 72
150MA80	♦ INRJ	366 - 70
150MA100	♦ INRJ	376 - 4
150MA120	♦ INRJ	381 - 3
150MA140	♦ INRJ	383 - 77
150MA160	♦ INRJ	387 - 50
150MA180	♦ INRJ	388 - 94
150R1B	EDL	301 - 75
150R2B	EDL	312 - 72
150R3B	EDL	322 - 37
150R4B	EDL	331 - 58
150R5B	EDL	341 - 6
150R6B	EDL	348 - 83
150R7B	EDL	355 -107
150R8B	EDL	361 - 51
150R9B	EDL	367 - 20
150R10B	EDL	371 - 80
150R11B	EDL	376 - 43
150R12B	EDL	378 - 65
150R13B	EDL	381 - 36
150R14B	EDL	382 - 27
150R15B	EDL	384 - 94
150R16B	EDL	386 - 36
150R18B	EDL	388 - 32
150R20B	EDL	390 - 36
150R22B	EDL	391 - 19
150R24B	EDL	391 - 88
150R26B	EDL	392 - 96
150R28B	EDL	393 - 32
150R30B	EDL	394 - 71
150R32B	EDL	395 - 16
150R34B	EDL	395 - 34
150R36B	EDL	396 - 2
150R38B	EDL	396 - 28
150R40B	EDL	397 - 51
150R42B	EDL	397 - 82
150R44B	EDL	397 -100
150R46B	EDL	398 - 45
150R48B	EDL	398 - 70
150R50B	EDL	400 - 5
150TD11	TOSJ	385 - 31
151RA20	INRB	439 - 64
INRC	INRI	
	INRJ	
151RA30	INRB	447 - 24
INRC	INRI	
	INRJ	

TYPE No.	MFRS	Pg&Line
151RA40	INRB	455 - 92
INRC	INRI	
	INRJ	
151RA50	INRB	461 - 86
INRC	INRI	
	INRJ	
151RA60	INRB	469 - 58
INRC	INRI	
	INRJ	
151RA70	INRB	473 - 4
INRC	INRI	
	INRJ	
151RA80	INRB	478 - 44
INRC	INRI	
	INRJ	
151RA90	INRB	481 - 40
INRC	INRI	
	INRJ	
151RA100	INRB	484 - 89
INRC	INRI	
	INRJ	
151RA110	INRB	487 - 5
INRC	INRI	
	INRJ	
151RA120	INRB	489 - 69
INRC	INRI	
	INRJ	
151RA130	INRB	491 - 48
INRC	INRI	
	INRJ	
151RB20	INRB	439 - 56
INRC	INRI	
	INRJ	
151RB30	INRB	447 - 16
INRC	INRI	
	INRJ	
151RB40	INRB	455 - 83
INRC	INRI	
	INRJ	
151RB50	INRB	461 - 78
INRC	INRI	
	INRJ	
151RB60	INRB	469 - 46
INRC	INRI	
	INRJ	
151RB70	INRB	472 -108
INRC	INRI	
	INRJ	
151RB80	INRB	478 - 37
INRC	INRI	
	INRJ	
151RB90	INRB	481 - 36
INRC	INRI	
	INRJ	
151RB100	INRB	484 - 82
INRC	INRI	
	INRJ	
151RB110	INRB	487 - 1
INRC	INRI	
	INRJ	
151RB120	INRB	489 - 63
INRC	INRI	
	INRJ	
151RB130	INRB	491 - 42
INRC	INRI	
	INRJ	
151RC5	INRB	421 - 30
INRC	INRI	
	INRJ	
151RC5A	INRB	421 - 31
INRC	INRI	
	INRJ	
151RC10	INRB	429 - 19
INRC	INRI	
	♦ INRJ	
151RC10A	INRB	429 - 20
INRC	INRI	
	INRJ	
151RC15	INRB	431 - 80
INRC	INRI	
	INRJ	
151RC15A	INRB	431 - 81
INRC	INRI	
	INRJ	
151RC20	INRB	439 - 55
INRC	INRI	
	♦ INRJ	
151RC20A	INRB	439 - 58
INRC	INRI	
	INRJ	
151RC25	INRB	441 -100
INRC	INRI	
	INRJ	
151RC25A	INRB	441 -101
INRC	INRI	
	INRJ	
151RC30	INRB	447 - 15
INRC	INRI	
	♦ INRJ	
151RC30A	INRB	447 - 18
INRC	INRI	
	INRJ	
151RC40	INRB	455 - 82
INRC	INRI	
	♦ INRJ	
151RC40A	INRB	455 - 86
INRC	INRI	
	INRJ	
151RC50	INRB	461 - 77
INRC	INRI	
	♦ INRJ	
151RC50A	INRB	461 - 80
INRC	INRI	
	INRJ	

TYPE No.	MFRS	Pg&Line
151RC60	INRB	469 - 44
INRC	INRI	
	♦ INRJ	
151RC60A	INRB	469 - 50
INRC	INRI	
	INRJ	
151RC70	INRB	472 -107
INRC	INRI	
	INRJ	
151RC70A	INRB	472 -110
INRC	INRI	
	INRJ	
151RC80	INRB	478 - 36
INRC	INRI	
	♦ INRJ	
151RC80A	INRB	478 - 40
INRC	INRI	
	INRJ	
151RC100	♦ INRJ	484 - 85
151RC120	♦ INRJ	489 - 65
151RCF15A	INRB	431 - 82
INRC	INRI	
	INRJ	
151RCF25A	INRB	441 -102
INRC	INRI	
	INRJ	
151RCF60A	INRB	469 - 51
INRC	INRI	
	INRJ	
151REA60	INRB	469 - 59
INRC	INRI	
	INRJ	
151REA70	INRB	473 - 5
INRC	INRI	
	INRJ	
151REA80	INRB	478 - 45
INRC	INRI	
	INRJ	
151REA90	INRB	481 - 41
INRC	INRI	
	INRJ	
151REA100	INRB	484 - 90
INRC	INRI	
	INRJ	
151REA110	INRB	487 - 6
INRC	INRI	
	INRJ	
151REA120	INRB	489 - 70
INRC	INRI	
	INRJ	
151REA130	INRB	491 - 49
INRC	INRI	
	INRJ	
151REB60	INRB	469 - 47
INRC	INRI	
	INRJ	
151REB70	INRB	472 -109
INRC	INRI	
	INRJ	
151REB80	INRB	478 - 38
INRC	INRI	
	INRJ	
151REB90	INRB	481 - 37
INRC	INRI	
	INRJ	
151REB100	INRB	484 - 83
INRC	INRI	
	INRJ	
151REB110	INRB	487 - 2
INRC	INRI	
	INRJ	
151REB120	INRB	489 - 64
INRC	INRI	
	INRJ	
151REB130	INRB	491 - 43
INRC	INRI	
	INRJ	
151RF5	INRB	421 - 32
♦ INRC	INRI	
	INRJ	
151RF10	INRB	429 - 21
♦ INRC	INRI	
	INRJ	
151RF15	INRB	431 - 83
♦ INRC	INRI	
	INRJ	
151RF20	INRB	439 - 59
♦ INRC	INRI	
	INRJ	
151RF25	INRB	441 -103
♦ INRC	INRI	
	INRJ	
151RF30	INRB	447 - 19
♦ INRC	INRI	
	INRJ	
151RF40	INRB	455 - 87
♦ INRC	INRI	
	INRJ	
151RF50	INRB	461 - 81
♦ INRC	INRI	
	INRJ	
151RF60	INRB	469 - 52
♦ INRC	INRI	
	INRJ	
160E05	AMD	297 - 95
160E10	AMD	306 - 35
160E15	AMD	308 - 96
160E20	AMD	317 - 94
160E30	AMD	326 - 20
160E40	AMD	337 - 18
160E50	AMD	344 - 58
160E60	AMD	353 - 86
160E70	AMD	357 -110
160E80	AMD	365 - 94

TYPE No.	MFRS	Pg&Line
160E90	AMD	368 - 40
160E100	AMD	375 - 32
160F05	AMD	297 - 96
160F15	AMD	308 - 97
160F50	AMD	344 - 59
160F60	AMD	353 - 87
160F70	AMD	358 - 1
160F80	AMD	365 - 95
160F90	AMD	368 - 41
160F100	AMD	375 - 33
166J2	♦ ESMF	346 - 13
	MISI	
168J2	♦ ESMF	358 -102
	MISI	
170J2	ESMF	369 - 85
	MISI	
175E05	AMD	297 - 97
175E10	AMD	306 - 36
175E15	AMD	308 - 98
175E20	AMD	317 - 95
175E30	AMD	326 - 21
175E40	AMD	337 - 21
175E50	AMD	344 - 60
175E60	AMD	353 - 88
175E70	AMD	358 - 2
175E80	AMD	365 - 98
175E90	AMD	368 - 42
175E100	AMD	375 - 34
175F05	AMD	297 - 98
175F10	AMD	306 - 37
175F15	AMD	308 - 99
175F20	AMD	317 - 96
175F30	AMD	326 - 22
175F40	AMD	337 - 22
175F50	AMD	344 - 61
175F60	AMD	353 - 89
175F70	AMD	358 - 3
175F80	AMD	365 - 99
175F90	AMD	368 - 43
175F100	AMD	375 - 35
175PA50	INRB	461 -101
INRC	INRI	
	INRJ	
175PA60	INRB	469 - 77
INRC	INRI	
	INRJ	
175PA80	INRB	478 - 63
INRC	INRI	
	INRJ	
175PA100	INRB	484 -106
INRC	INRI	
	INRJ	
175PA110	INRB	487 - 12
INRC	INRI	
	INRJ	
175PA120	INRB	489 - 82
INRC	INRI	
	INRJ	
175PA130	INRB	491 - 54
INRC	INRI	
	INRJ	
200BN20	♦ WESI	317 - 97
200BN30	♦ WESI	326 - 23
200BN40	♦ WESI	337 - 23
200BN50	♦ WESI	344 - 62
200BN60	♦ WESI	353 - 90
200BN80	♦ WESI	365 -100
200BN100	♦ WESI	375 - 36
200BN120	♦ WESI	380 - 39
200BN140	♦ WESI	383 - 5
200BN160	♦ WESI	386 -106
200BNS	♦ WESI	337 - 24
200R1B	EDL	302 - 30
200R2B	EDL	313 - 33
200R3B	EDL	322 - 93
200R4B	EDL	332 - 20
200R5B	EDL	341 - 54
200R6B	EDL	349 - 41
200R7B	EDL	356 - 27
200R8B	EDL	361 -106
200R9B	EDL	367 - 26
200R10B	EDL	372 - 22
200R11B	EDL	376 - 46
200R12B	EDL	378 - 85
200R13B	EDL	381 - 38
200R14B	EDL	382 - 31
200R15B	EDL	384 - 97
200R16B	EDL	386 - 39
200R18B	EDL	388 - 34
200R20B	EDL	390 - 39
200R22B	EDL	391 - 20
200R24B	EDL	391 - 89
200R26B	EDL	392 - 97
200R28B	EDL	393 - 33
200R30B	EDL	394 - 74
200R32B	EDL	395 - 17
200R34B	EDL	395 - 35
200R36B	EDL	396 - 4
200R38B	EDL	396 - 29
200R40B	EDL	397 - 53
200R42B	EDL	397 - 84
200R44B	EDL	397 -101
200R46B	EDL	398 - 46
200R48B	EDL	398 - 72
200R50B	EDL	400 - 9
200S40	♦ SCO	396 -106
200S45	♦ SCO	398 - 14
200S50	♦ SCO	399 - 56
200UB5	INRB	297 -102
INRC	INRI	
	INRJ	
200UB10	INRB	306 - 42
INRC	INRI	
	INRJ	

Δ-Registered with JEDEC by this manufacturer

♦-Copy of mfr's data sheet may be ordered from D.A.T.A.

1. TYPE No. CROSS INDEX

IN TYPE NUMBER SEQUENCE

TYPE No.	MFRS	Pg&Line
200UB20	INRB	317-102
INRC	INRI	
	INRJ	
200UB30	INRB	326- 29
INRC	INRI	
	INRJ	
200UB40	INRB	337- 30
INRC	INRI	
	INRJ	
200UB50	INRB	344- 66
INRC	INRI	
	INRJ	
201M	WESY	465-102
201P	WESY	471- 42
201S	WESY	475- 64
201V	WESY	479- 91
201Z	WESY	482- 66
201ZB	WESY	485-101
201ZD	WESY	487- 94
201ZF	WESY	490- 68
201ZH	WESY	491- 95
201ZK	WESY	493- 3
202M	WESY	465- 22
202P	WESY	471- 13
202S	WESY	475- 8
202V	WESY	479- 76
202Z	WESY	482- 40
202ZB	WESY	485- 91
202ZD	WESY	487- 76
202ZF	WESY	490- 59
202ZH	WESY	491- 92
202ZK	WESY	493- 1
203M	WESY	465- 39
203P	WESY	471- 17
203S	WESY	475- 17
203V	WESY	479- 79
203Z	WESY	482- 46
203ZB	WESY	485- 94
203ZD	WESY	487- 82
203ZF	WESY	490- 61
203ZH	WESY	491- 94
203ZK	WESY	493- 2
212R2S	ESMF	379- 64
	MISI	
240E05	AMD	298- 3
240E10	AMD	306- 57
240E15	AMD	309- 1
240E20	AMD	318- 7
240E30	AMD	326- 42
240E40	AMD	337- 46
240E50	AMD	344- 79
240E60	AMD	353-108
240E70	AMD	358- 10
240E80	AMD	366- 4
240E90	AMD	368- 50
240E100	AMD	375- 47
240E120	AMD	380- 49
240F05	AMD	298- 4
240F10	AMD	306- 58
240F15	AMD	309- 2
240F20	AMD	318- 8
240F30	AMD	326- 43
240F40	AMD	337- 47
240F50	AMD	344- 80
240F60	AMD	353-109
240F70	AMD	358- 11
240F80	AMD	366- 5
240F90	AMD	368- 51
240F100	AMD	375- 48
240F120	AMD	380- 50
0241	EBRG	302- 73
0242	EBRG	313- 79
0243	EBRG	323- 12
0245	EBRG	341- 82
0248	EBRG	362- 34
250A	♦WESY	420-101
250B	♦WESY	428- 46
250D	♦WESY	438- 17
250F	♦WESY	446- 24
250H	♦WESY	454- 36
250K	♦WESY	460- 68
250M	♦WESY	467- 63
250P	♦WESY	472- 22
250PA50	INRB	462- 12
INRC	INRI	
	INRJ	
250PA60	INRB	469-102
INRC	INRI	
	INRJ	
250PA80	INRB	478- 86
INRC	INRI	
	INRJ	
250PA100	INRB	485- 18
INRC	INRI	
	INRJ	
250PA110	INRB	487- 22
INRC	INRI	
	INRJ	
250PA120	INRB	489-101
INRC	INRI	
	INRJ	
250PA130	INRB	491- 62
INRC	INRI	
	INRJ	
250R1B	EDL	302- 68
250R2B	EDL	313- 74
250R3B	EDL	323- 8
250R4B	EDL	332- 59
250R5B	EDL	341- 78
250R6B	EDL	349- 78
250R7B	EDL	356- 36
250R8B	EDL	362- 28
250R9B	EDL	367- 29
250R10B	EDL	372- 52

TYPE No.	MFRS	Pg&Line
250R11B	EDL	376- 51
250R12B	EDL	378- 98
250R13B	EDL	381- 40
250R14B	EDL	382- 37
250R15B	EDL	384- 99
250R16B	EDL	386- 45
250R18B	EDL	388- 40
250R20B	EDL	390- 44
250R22B	EDL	391- 21
250R24B	EDL	391- 90
250R26B	EDL	392- 98
250R28B	EDL	393- 34
250R30B	EDL	394- 76
250R32B	EDL	395- 19
250R34B	EDL	395- 36
250R36B	EDL	396- 5
250R38B	EDL	396- 30
250R40B	EDL	397- 56
250R42B	EDL	397- 85
250R44B	EDL	397-102
250R46B	EDL	398- 47
250R48B	EDL	398- 74
250R50B	EDL	400- 11
250RA50	INRB	462- 16
INRC	INRI	
	INRJ	
250RA60	INRB	469-109
INRC	INRI	
	INRJ	
250RA70	INRB	473- 29
INRC	INRI	
	INRJ	
250RA80	INRB	478- 92
INRC	INRI	
	INRJ	
250RA90	INRB	481- 63
INRC	INRI	
	INRJ	
250RA100	INRB	485- 24
INRC	INRI	
	INRJ	
250RA110	INRB	487- 26
INRC	INRI	
	INRJ	
250RA120	INRB	489-107
INRC	INRI	
	INRJ	
250RM60	INRB	469-104
♦INRC	INRI	
	INRJ	
250RM80	INRB	478- 88
♦INRC	INRI	
	INRJ	
250RM100	INRB	485- 20
♦INRC	INRI	
	INRJ	
250RM110	INRB	487- 23
♦INRC	INRI	
	INRJ	
250RM120	INRB	489-103
♦INRC	INRI	
	INRJ	
250S30	♦SCO	394- 24
250S35	♦SCO	395- 72
250S40	♦SCO	397- 10
250S	♦WESY	476- 89
250V	♦WESY	480- 63
250Z	♦WESY	483- 59
250ZB	♦WESY	486- 56
250ZD	♦WESY	488- 69
250ZE6 8	AMD	178-158
250ZE7 5	AMD	181- 5
250ZE8 2	AMD	183- 73
250ZE9 2	AMD	186-185
250ZE10	AMD	189-100
250ZE12	AMD	193-193
250ZE14	AMD	196-158
250ZE15	AMD	198-196
250ZE16	AMD	200-139
250ZE17	AMD	201- 75
250ZE18	AMD	203- 88
250ZE20	AMD	206- 12
250ZE22	AMD	208- 10
250ZE24	AMD	209-167
250ZE26	AMD	210- 96
250ZE27	AMD	212- 78
250ZE29	AMD	212-144
250ZE30	AMD	214- 70
250ZF6 8	AMD	178-159
250ZF7 5	AMD	181- 6
250ZF8 2	AMD	183- 74
250ZF9 2	AMD	186-186
250ZF10	AMD	189-101
250ZF12	AMD	193-194
250ZF14	AMD	196-159
250ZF15	AMD	198-197
250ZF16	AMD	200-140
250ZF17	AMD	201- 76
250ZF18	AMD	203- 89
250ZF20	AMD	206- 13
250ZF22	AMD	208- 11
250ZF24	AMD	209-168
250ZF26	AMD	210- 97
250ZF27	AMD	212- 79
250ZF29	AMD	212-145
250ZF30	AMD	214- 71
250ZF	♦WESY	490- 96
250ZH	♦WESY	492- 13
250ZK	♦WESY	493- 10
251A	♦WESY	420- 70
251B	♦WESY	427-109
251D	♦WESY	437- 40
251F2S	NECJ	318- 11
251F3S	NECJ	326- 46

TYPE No.	MFRS	Pg&Line
251F4S	NECJ	337- 51
251F	♦WESY	445- 59
251H	♦WESY	453- 45
251K	♦WESY	459-108
251M	♦WESY	466- 54
251P	♦WESY	471- 76
251RC10	♦INRJ	429- 60
251RC20	♦INRJ	439-106
251RC30	♦INRJ	447- 66
251RC40	♦INRJ	456- 28
251RC50	♦INRJ	462- 21
251RC60	♦INRJ	470- 5
251RC80	♦INRJ	478- 98
251RC100	♦INRJ	485- 31
251RC120	♦INRJ	490- 3
251RM60	INRB	469-105
♦INRC	INRI	
	INRJ	
251RM80	INRB	478- 89
♦INRC	INRI	
	INRJ	
251RM100	INRB	485- 21
♦INRC	INRI	
	INRJ	
251RM110	INRB	487- 24
♦INRC	INRI	
	INRJ	
251RM120	INRB	489-104
♦INRC	INRI	
	INRJ	
251S	♦WESY	475-105
251UL60S15	♦INRB	287- 44
♦INRC	♦INRI	
	♦INRJ	
251UL60S20	♦INRB	287- 50
♦INRC	♦INRI	
	♦INRJ	
251UL80S15	♦INRB	287-101
♦INRC	♦INRI	
	♦INRJ	
251UL80S20	♦INRB	287-107
♦INRC	♦INRI	
	♦INRJ	
251UL100S15	♦INRB	288- 49
♦INRC	♦INRI	
	♦INRJ	
251UL100S20	♦INRB	288- 54
♦INRC	♦INRI	
	♦INRJ	
251UL120S20	♦INRB	288- 76
♦INRC	♦INRI	
	♦INRJ	
251UL130S20	♦INRB	288- 83
♦INRC	♦INRI	
	♦INRJ	
251V	♦WESY	480- 15
251Z	♦WESY	482- 98
251ZB	♦WESY	486- 18
251ZD	♦WESY	488- 12
251ZF	♦WESY	490- 76
251ZH	♦WESY	491- 97
251ZK	♦WESY	493- 5
260B	WESY	429- 36
260D	WESY	439- 79
260F	WESY	447- 38
260H	WESY	455-108
260K	WESY	461-100
260M	WESY	469- 76
260P	WESY	473- 14
260S	WESY	478- 62
260V	WESY	481- 48
260Z	WESY	484-105
260ZB	WESY	487- 11
260ZD	WESY	489- 81
260ZF	WESY	491- 53
260ZH	WESY	492- 72
260ZK	WESY	493- 26
261B	WESY	429- 7
261D	WESY	439- 32
261F	WESY	447- 2
261H	WESY	455- 57
261K	WESY	461- 63
261M	WESY	469- 18
261P	WESY	472- 96
261S	WESY	478- 12
261V	WESY	481- 27
261Z	WESY	484- 68
261ZB	WESY	486-105
261ZD	WESY	489- 51
261ZF	WESY	491- 35
261ZH	WESY	492- 53
261ZK	WESY	493- 18
263B	WESY	429- 10
263D	WESY	439- 35
263F	WESY	447- 5
263H	WESY	455- 60
263K	WESY	461- 66
263M	WESY	469- 21
263P	WESY	472- 99
263S	WESY	478- 15
263V	WESY	481- 29
263Z	WESY	484- 70
263ZB	WESY	486-106
263ZD	WESY	489- 52
263ZF	WESY	491- 36
263ZH	WESY	492- 54
263ZK	WESY	493- 19
270B	WESY	429- 80
270D	WESY	440- 21
270F	WESY	447- 92
270H	WESY	456- 57
270K	WESY	462- 52
270M	WESY	470- 42
270P	WESY	473- 53

TYPE No.	MFRS	Pg&Line
270S	WESY	479- 21
270V	WESY	481- 86
270Z	WESY	485- 63
270ZB	WESY	487- 48
270ZD	WESY	490- 32
270ZF	WESY	491- 81
270ZH	WESY	492-103
272B	WESY	429- 73
272D	WESY	440- 13
272F	WESY	447- 84
272H	WESY	456- 47
272K	WESY	462- 38
272M	WESY	470- 27
272P	WESY	473- 41
272S	WESY	479- 5
272V	WESY	481- 75
272Z	WESY	485- 47
272ZB	WESY	487- 37
272ZD	WESY	490- 18
272ZF	WESY	491- 75
272ZH	WESY	492- 96
273B	WESY	429- 44
273D	WESY	439- 87
273F	WESY	447- 45
273H	WESY	456- 6
273K	WESY	461-108
273M	WESY	469- 85
273P	WESY	473- 16
273S	WESY	478- 70
273V	WESY	481- 50
273Z	WESY	485- 3
273ZB	WESY	487- 14
273ZD	WESY	489- 88
273ZF	WESY	491- 55
273ZH	WESY	492- 77
275E05	AMD	298- 12
275E10	AMD	306- 77
275E15	AMD	309- 12
275E20	AMD	318- 28
275E30	AMD	326- 62
275E40	AMD	337- 70
275E50	AMD	344- 99
275E60	AMD	354- 21
275E70	AMD	358- 25
275E80	AMD	366- 22
275E90	AMD	368- 60
275E100	AMD	375- 63
275E120	AMD	380- 60
275F05	AMD	298- 13
275F10	AMD	306- 78
275F15	AMD	309- 13
275F20	AMD	318- 29
275F30	AMD	326- 63
275F40	AMD	337- 71
275F50	AMD	344-100
275F60	AMD	354- 22
275F70	AMD	358- 26
275F80	AMD	366- 23
275F90	AMD	368- 61
275F100	AMD	375- 64
275F120	AMD	380- 61
276B	WESY	429- 62
276D	WESY	440- 1
276F	WESY	447- 72
276H	WESY	456- 34
276K	WESY	462- 25
276M	WESY	470- 13
276P	WESY	473- 34
276S	WESY	478-106
276V	WESY	481- 69
276Z	WESY	485- 39
276ZB	WESY	487- 30
276ZD	WESY	490- 11
276ZF	WESY	491- 72
276ZH	WESY	492- 94
0300	EBRG	307- 19
300E	WESY	319- 74
300FXD11	TOSJ	394- 98
300G	WESY	327- 83
300LD11	TOSJ	366- 52
300LD11A	TOSJ	366- 59
300ND11	TOSJ	375- 93
300ND11A	TOSJ	375-101
300QD11	TOSJ	380- 93
300QD11A	TOSJ	380-101
300R1B	EDL	302- 91
300R2B	EDL	313-101
300R3B	EDL	323- 31
300R4B	EDL	332- 93
300R5B	EDL	341-101
300R6B	EDL	349-110
300R7B	EDL	356- 56
300R8B	EDL	362- 64
300R9B	EDL	367- 39
300R10B	EDL	372- 76
300R11B	EDL	376- 52
300R12B	EDL	378-107
300R13B	EDL	381- 41
300R14B	EDL	382- 38
300R15B	EDL	384-100
300R16B	EDL	386- 48
300R18B	EDL	388- 41
300R20B	EDL	390- 46
300R22B	EDL	391- 22
300R24B	EDL	391- 92
300R26B	EDL	392- 99
300R28B	EDL	393- 35
300R30B	EDL	394- 77
300R32B	EDL	395- 20
300R34B	EDL	395- 37
300R36B	EDL	396- 6
300R38B	EDL	396- 31
300R40B	EDL	397- 57
300R42B	EDL	397- 86

TYPE No.	MFRS	Pg&Line
300R44B	EDL	397-103
300R46B	EDL	398- 48
300R48B	EDL	398- 75
300R50B	EDL	400- 14
300RA50	INRB	462- 39
INRC	INRI	
	INRJ	
300RA60	INRB	470- 28
INRC	INRI	
	INRJ	
300RA70	INRB	473- 42
INRC	INRI	
	INRJ	
300RA80	INRB	479- 6
INRC	INRI	
	INRJ	
300RA90	INRB	481- 76
INRC	INRI	
	INRJ	
300RA100	INRB	485- 48
INRC	INRI	
	INRJ	
300RA110	INRB	487- 38
INRC	INRI	
	INRJ	
300RA120	INRB	490- 19
INRC	INRI	
	INRJ	
300RB50	INRB	462- 40
INRC	INRI	
	INRJ	
300RB60	INRB	470- 29
INRC	INRI	
	INRJ	
300RB70	INRB	473- 43
INRC	INRI	
	INRJ	
300RB80	INRB	479- 7
INRC	INRI	
	INRJ	
300RB90	INRB	481- 74
INRC	INRI	
	INRJ	
300RB100	INRB	485- 49
INRC	INRI	
	INRJ	
300RB110	INRB	487- 39
INRC	INRI	
	INRJ	
300RB120	INRB	490- 20
INRC	INRI	
	INRJ	
300TD11	TOSJ	385- 69
300TD11A	TOSJ	385- 77
300U5A	INRB	298- 14
INRC	INRI	
	INRJ	
300U10A	INRB	306- 89
INRC	INRI	
	INRJ	
300U15A	INRB	309- 14
INRC	INRI	
	INRJ	
300U20A	INRB	318- 41
INRC	INRI	
	INRJ	
300U25A	INRB	319-104
INRC	INRI	
	INRJ	
300U30A	INRB	326- 72
INRC	INRI	
	INRJ	
300U40A	INRB	337- 85
INRC	INRI	
	INRJ	
300U50A	INRB	344-109
INRC	INRI	
	INRJ	
300U60A	INRB	354- 34
INRC	INRI	
	INRJ	
300U70A	INRB	358- 35
INRC	INRI	
	INRJ	
300U80A	INRB	366- 37
INRC	INRI	
	INRJ	
300U90A	INRB	368- 70
INRC	INRI	
	INRJ	
300U100A	INRB	375- 79
INRC	INRI	
	INRJ	
300U120A	INRB	380- 76
INRC	INRI	
	INRJ	
300WD11	TOSJ	388- 83
300WD11A	TOSJ	388- 88
300YD11	TOSJ	390- 75
0301	EBRG	309- 30
301RC10	♦INRJ	429- 74
301RC20	♦INRJ	440- 14
301RC30	♦INRJ	447- 85
301RC40	♦INRJ	456- 48
301RC50	♦INRJ	462- 41
301RC60	♦INRJ	470- 30
301RC80	♦INRJ	479- 8
301RC100	♦INRJ	485- 50
301RC120	♦INRJ	490- 21
301U120	INRB	380- 77
INRC	INRI	
	INRJ	
301U140	INRB	383- 36

cont next page

Δ-Registered with JEDEC by this manufacturer

♦-Copy of mfr's data sheet may be ordered from D.A.T.A.

1. TYPE No. CROSS INDEX

IN TYPE NUMBER SEQUENCE

TYPE No.	MFRS	Pg&Line
301U140		
(cont)	INRC	
	INRI	
	INRJ	
301U160	INRB	387 - 21
INRC	INRI	
	INRJ	
301U180	INRB	388 - 76
INRC	INRI	
	INRJ	
301U200	INRB	390 - 69
INRC	INRI	
	INRJ	
301U220	INRB	391 - 31
INRC	INRI	
	INRJ	
301U240	INRB	391 -109
INRC	INRI	
	INRJ	
301UR120	INRB	380 - 78
INRC	INRI	
	INRJ	
301UR140	INRB	383 - 37
INRC	INRI	
	INRJ	
301UR160	INRB	387 - 22
INRC	INRI	
	INRJ	
301UR180	INRB	388 - 77
INRC	INRI	
	INRJ	
301UR200	INRB	390 - 70
INRC	INRI	
	INRJ	
0302	EBRG	320 - 7
302E	WESY	319 - 60
302G	WESY	327 - 71
303E	WESY	319 - 55
303G	WESY	327 - 66
0304	EBRG	338 - 89
304RA50	INRB	462 - 26
INRC	INRI	
	INRJ	
304RA60	INRB	470 - 14
INRC	INRI	
	INRJ	
304RA80	INRB	478 -107
INRC	INRI	
	INRJ	
304RA100	INRB	485 - 40
INRC	INRI	
	INRJ	
304RA110	INRB	487 - 31
INRC	INRI	
	INRJ	
304RA120	INRB	490 - 12
INRC	INRI	
	INRJ	
0307	EBRG	366 - 85
0310	EBRG	307 - 20
0311	EBRG	309 - 31
0312	EBRG	320 - 8
312R2S	ESMF	379 - 79
	MISI	
0314	EBRG	338 - 90
0317	EBRG	366 - 86
0320	EBRG	307 - 21
0321	EBRG	309 - 32
0322	EBRG	320 - 9
322E	WESY	319 - 89
322G	WESY	327 - 95
0324	EBRG	338 - 91
0327	EBRG	366 - 87
339E	WESY	319 - 97
339G	WESY	327 -101
350R1B	EDL	303 - 28
350R2B	EDL	314 - 37
350R3B	EDL	323 - 64
350R4B	EDL	333 - 30
350R5B	EDL	342 - 21
350R6B	EDL	350 - 49
350R7B	EDL	356 - 71
350R8B	EDL	362 -104
350R9B	EDL	367 - 46
350R10B	EDL	372 -109
350R11B	EDL	376 - 54
350R12B	EDL	379 - 5
350R13B	EDL	381 - 43
350R14B	EDL	382 - 41
350R15B	EDL	384 -103
350R16B	EDL	386 - 50
350R18B	EDL	388 - 43
350R20B	EDL	390 - 48
350R22B	EDL	391 - 23
350R24B	EDL	391 - 94
350R26B	EDL	392 -100
350R28B	EDL	393 - 36
350R30B	EDL	394 - 81
350R32B	EDL	395 - 21
350R34B	EDL	395 - 38
350R36B	EDL	396 - 8
350R38B	EDL	396 - 32
350R40B	EDL	397 - 60
350R42B	EDL	397 - 87
350R44B	EDL	397 -104
350R46B	EDL	398 - 49
350R48B	EDL	398 - 76
350R50B	EDL	400 - 17
350RA50	INRB	462 - 49
INRC	INRI	
	INRJ	
350RA60	INRB	470 - 39
INRC	INRI	
	INRJ	

TYPE No.	MFRS	Pg&Line
350RA70	INRB	473 - 50
INRC	INRI	
	INRJ	
350RA80	INRB	479 - 18
INRC	INRI	
	INRJ	
350RA90	INRB	481 - 83
INRC	INRI	
	INRJ	
350RA100	INRB	485 - 60
INRC	INRI	
	INRJ	
350RA110	INRB	487 - 45
INRC	INRI	
	INRJ	
350RA120	INRB	490 - 29
INRC	INRI	
	INRJ	
350S20	♦SCO	389 - 98
350S25	♦SCO	392 - 52
350S30	♦SCO	394 - 38
366A	WESY	295 -106
366B	WESY	303 - 58
366C	WESY	308 - 3
366D	WESY	314 - 72
366F	WESY	323 - 90
366H	WESY	333 - 64
366K	WESY	342 - 37
366M	WESY	350 - 78
367A	WESY	296 - 43
367B	WESY	304 - 17
367C	WESY	308 - 13
367D	WESY	315 - 42
367F	WESY	324 - 37
367H	WESY	334 - 41
367K	WESY	342 - 89
367M	WESY	351 - 54
368A	♦WESY	296 - 88
368B	♦WESY	304 - 71
368C	♦WESY	308 - 27
368D	♦WESY	315 -103
368F	♦WESY	324 - 84
368H	♦WESY	334 -110
368K	♦WESY	343 - 27
368M	♦WESY	352 - 1
368P	♦WESY	357 - 32
368S	♦WESY	364 - 37
368V	♦WESY	367 -102
368Z	♦WESY	374 - 10
371A	WESY	297 - 43
371B	WESY	305 - 43
371C	WESY	308 - 50
371D	WESY	316 - 86
371F	WESY	325 - 28
371H	WESY	335 - 93
371K	WESY	343 - 73
371M	WESY	352 - 77
387C	WESY	281 - 26
387E	WESY	283 -100
388A	WESY	272 - 28
388B	WESY	278 - 86
388C	WESY	281 - 24
388D	WESY	282 - 39
388F	WESY	284 - 29
388H	WESY	285 - 14
388K	WESY	286 - 29
388M	WESY	286 - 85
389C	WESY	281 - 27
389E	WESY	283 -101
400E15	AMD	309 - 19
400E70	AMD	358 - 57
400E80	AMD	366 - 61
400E90	AMD	368 - 89
400E100	AMD	375 -103
400E120	AMD	380 -103
400F05	AMD	298 - 20
400F15	AMD	309 - 20
400F50	AMD	345 - 24
400F60	AMD	354 - 60
400F70	AMD	358 - 58
400F80	AMD	366 - 62
400F90	AMD	368 - 90
400F100	AMD	375 -104
400R1B	EDL	303 - 32
400R2B	EDL	314 - 41
400R3B	EDL	323 - 68
400R4B	EDL	333 - 34
400R5B	EDL	342 - 23
400R6B	EDL	350 - 53
400R7B	EDL	356 - 72
400R8B	EDL	362 -107
400R9B	EDL	367 - 48
400R10B	EDL	372 -110
400R11B	EDL	376 - 55
400R12B	EDL	379 - 7
400R13B	EDL	381 - 44
400R14B	EDL	382 - 42
400R15B	EDL	384 -104
400R16B	EDL	386 - 52
400R18B	EDL	388 - 44
400R20B	EDL	390 - 49
400R22B	EDL	391 - 24
400R24B	EDL	391 - 95
400R26B	EDL	392 -101
400R28B	EDL	393 - 37
400R30B	EDL	394 - 82
400R32B	EDL	395 - 22
400R34B	EDL	395 - 39
400R36B	EDL	396 - 9
400R38B	EDL	396 - 33
400R40B	EDL	397 - 61
400R42B	EDL	397 - 88
400R44B	EDL	397 -105
400R46B	EDL	398 - 50

TYPE No.	MFRS	Pg&Line
400R48B	EDL	398 - 77
400R50B	EDL	400 - 19
401PDL40S15	♦INRB	285 - 95
INRC	♦INRI	
	♦INRJ	
401PDL40S20	♦INRB	285 -100
♦INRI	♦INRJ	
401PDL60S15	♦INRB	287 - 45
INRC	♦INRI	
	♦INRJ	
401PDL60S20	♦INRB	287 - 51
INRC	♦INRI	
	♦INRJ	
401PDL80S15	♦INRB	287 -102
INRC	♦INRI	
	♦INRJ	
401PDL80S20	♦INRB	287 -108
INRC	♦INRI	
	♦INRJ	
401PDL100S20	♦INRB	288 - 55
INRC	♦INRI	
	♦INRJ	
401PDL120S20	♦INRB	288 - 77
INRC	♦INRI	
	♦INRJ	
401PDL130S20	♦INRB	288 - 84
INRC	♦INRI	
	♦INRJ	
402P	WESY	357 - 73
402S	WESY	365 - 34
402V	WESY	368 - 12
402Z	WESY	374 - 87
404P	WESY	357 - 13
404S	WESY	364 - 9
404V	WESY	367 - 92
404Z	WESY	373 -100
407A	WESY	295 -108
407B	WESY	303 - 60
407C	WESY	308 - 4
407D	WESY	314 - 74
407F	WESY	323 - 91
407H	WESY	333 - 66
407K	WESY	342 - 38
407M	WESY	350 - 80
407P	WESY	356 - 76
407S	WESY	363 - 16
407V	WESY	367 - 53
407Z	WESY	373 - 16
408A	WESY	296 - 44
408B	WESY	304 - 18
408C	WESY	308 - 14
408D	WESY	315 - 43
408F	WESY	324 - 38
408H	WESY	334 - 42
408K	WESY	342 - 90
408M	WESY	351 - 55
408P	WESY	357 - 2
408S	WESY	363 - 91
408V	WESY	367 - 82
408Z	WESY	373 - 73
409A	WESY	296 - 89
409B	WESY	304 - 72
409C	WESY	308 - 28
409D	WESY	315 -104
409F	WESY	324 - 85
409H	WESY	335 - 1
409K	WESY	343 - 28
409M	WESY	352 - 2
409P	WESY	357 - 33
409S	WESY	364 - 38
409V	WESY	367 -103
409Z	WESY	374 - 11
410A	WESY	297 -108
410B	WESY	306 - 50
410C	WESY	308 -106
410D	WESY	317 -110
410E	WESY	319 - 95
410F	WESY	326 - 37
410H	WESY	337 - 38
410K	WESY	344 - 73
410M	WESY	353 -104
411A	WESY	297 -103
411B	WESY	306 - 44
411C	WESY	308 -101
411D	WESY	317 -104
411E	WESY	319 - 90
411F	WESY	326 - 31
411H	WESY	337 - 32
411K	WESY	344 - 68
411M	WESY	353 - 98
411S	WESY	365 -106
411Z	WESY	375 - 41
411ZD	WESY	380 - 44
411ZH	WESY	383 - 10
417A	WESY	296 -110
417B	WESY	304 -103
417C	WESY	308 - 33
417D	WESY	316 - 27
417F	WESY	324 -106
417H	WESY	335 - 34
417K	WESY	343 - 48
417M	WESY	352 - 31
418A	WESY	297 - 28
418B	WESY	305 - 23
418C	WESY	308 - 43
418D	WESY	316 - 65
418F	WESY	325 - 12
418H	WESY	335 - 68
418K	WESY	343 - 62
418M	WESY	352 - 56
419A	WESY	297 - 50
419B	WESY	305 - 55
419C	WESY	308 - 54
419D	WESY	316 -100

TYPE No.	MFRS	Pg&Line
419F	WESY	325 - 36
419H	WESY	335 -110
419K	WESY	343 - 81
419M	WESY	352 - 96
420PA40S55	♦INRB	456 - 64
INRC	♦INRI	
	♦INRJ	
420PA60S55	♦INRB	470 - 50
INRC	♦INRI	
	♦INRJ	
420PA80S58	♦INRB	479 - 33
INRC	♦INRI	
	♦INRJ	
420PA100S58	♦INRB	485 - 70
INRC	♦INRI	
	♦INRJ	
420PA110T50	♦INRB	487 - 52
INRC	♦INRI	
	♦INRJ	
420PA120T50	♦INRB	490 - 39
INRC	♦INRI	
	♦INRJ	
420PM60	INRB	470 - 49
♦INRC	INRI	
	INRJ	
420PM80	INRB	479 - 32
♦INRC	INRI	
	INRJ	
420PM100	INRB	485 - 69
♦INRC	INRI	
	INRJ	
420PM110	INRB	487 - 51
♦INRC	INRI	
	INRJ	
420PM120	INRB	490 - 38
♦INRC	INRI	
	INRJ	
424K	WESY	286 - 34
424M	WESY	286 - 95
425K	WESY	286 - 35
425M	WESY	286 - 96
435P	WESY	357 - 74
435S	WESY	365 - 35
435V	WESY	368 - 13
435Z	WESY	374 - 88
437P	WESY	357 - 14
437S	WESY	364 - 10
437V	WESY	367 - 93
437Z	WESY	373 -101
441P	WESY	356 - 92
441S	WESY	363 - 45
441V	WESY	367 - 67
441Z	WESY	373 - 39
446P	WESY	356 - 93
446S	WESY	363 - 46
446V	WESY	367 - 68
446Z	WESY	373 - 40
450E05	AMD	298 - 25
450E10	AMD	307 - 5
450E15	AMD	309 - 25
450E20	AMD	318 - 69
450E30	AMD	326 - 98
450E40	AMD	338 - 11
450E50	AMD	345 - 29
450E60	AMD	354 - 66
450E70	AMD	358 - 60
450E80	AMD	366 - 64
450E90	AMD	368 - 91
450E100	AMD	375 -107
450E120	AMD	380 -105
450F05	AMD	298 - 26
450F10	AMD	307 - 6
450F15	AMD	309 - 26
450F20	AMD	318 - 70
450F30	AMD	326 - 99
450F40	AMD	338 - 12
450F50	AMD	345 - 30
450F60	AMD	354 - 67
450F70	AMD	358 - 61
450F80	AMD	366 - 65
450F90	AMD	368 - 92
450F100	AMD	375 -108
450R1B	EDL	303 - 39
450R2B	EDL	314 - 49
450R3B	EDL	323 - 75
450R4B	EDL	333 - 41
450R5B	EDL	342 - 27
450R6B	EDL	350 - 63
450R7B	EDL	356 - 73
450R8B	EDL	363 - 2
450R9B	EDL	367 - 51
450R10B	EDL	373 - 6
450R11B	EDL	376 - 56
450R12B	EDL	379 - 13
450R13B	EDL	381 - 46
450R14B	EDL	382 - 43
450R15B	EDL	384 -106
450R16B	EDL	386 - 54
450R18B	EDL	388 - 45
450R20B	EDL	390 - 50
450R22B	EDL	391 - 25
450R24B	EDL	391 - 96
450R26B	EDL	392 -102
450R28B	EDL	393 - 38
450R30B	EDL	394 - 83
450R32B	EDL	395 - 23
450R34B	EDL	395 - 40
450R36B	EDL	396 - 10
450R38B	EDL	396 - 34
450R40B	EDL	397 - 62
450R42B	EDL	397 - 89
450R44B	EDL	397 -106
450R46B	EDL	398 - 51
450R48B	EDL	398 - 78

TYPE No.	MFRS	Pg&Line
450R50B	EDL	400 - 21
470PA50	INRB	462 - 64
♦INRC	INRI	
	INRJ	
470PA60	INRB	470 - 57
♦INRC	INRI	
	INRJ	
470PA80	INRB	479 - 40
♦INRC	INRI	
	INRJ	
470PA100	INRB	485 - 77
♦INRC	INRI	
	INRJ	
470PA110	INRB	487 - 57
♦INRC	INRI	
	INRJ	
470PA120	INRB	490 - 45
♦INRC	INRI	
	INRJ	
470PA130	INRB	491 - 86
♦INRC	INRI	
	INRJ	
470PA140	INRB	492 -107
♦INRC	INRI	
	INRJ	
470PA150	INRB	493 - 41
♦INRC	INRI	
	INRJ	
470PA160	INRB	494 - 28
♦INRC	INRI	
	INRJ	
470PA170	INRB	494 - 48
♦INRC	INRI	
	INRJ	
470PB40S57	♦INRB	456 - 67
INRC	♦INRI	
	♦INRJ	
470PB60S57	♦INRB	470 - 55
INRC	♦INRI	
	♦INRJ	
470PB80T50	♦INRB	479 - 37
INRC	♦INRI	
	♦INRJ	
470PB100T50	♦INRB	485 - 74
INRC	♦INRI	
	♦INRJ	
470PB110T52	♦INRB	487 - 56
INRC	♦INRI	
	♦INRJ	
470PB120T52	♦INRB	490 - 43
INRC	♦INRI	
	♦INRJ	
471PD120	♦INRB	380 -106
INRC	♦INRI	
	♦INRJ	
471PD140	♦INRB	383 - 68
INRC	♦INRI	
	♦INRJ	
471PD160	♦INRB	387 - 45
INRC	♦INRI	
	♦INRJ	
471PD180	♦INRB	388 - 90
INRC	♦INRI	
	♦INRJ	
471PD200	♦INRB	390 - 83
INRC	♦INRI	
	♦INRJ	
478C	WESY	281 - 28
478E	WESY	283 -102
479C	WESY	281 - 29
479E	WESY	283 -103
479K	WESY	286 - 36
479M	WESY	286 - 97
0500	♦EBRG	252 - 58
500EXD21	TOSJ	392 - 83
500FXD21	TOSJ	394 -103
500R1B	EDL	303 - 43
500R2B	EDL	314 - 57
500R3B	EDL	323 - 81
500R4B	EDL	333 - 48
500R5B	EDL	342 - 33
500R6B	EDL	350 - 69
500R7B	EDL	356 - 74
500R8B	EDL	363 - 8
500R9B	EDL	367 - 52
500R10B	EDL	373 - 8
500R11B	EDL	376 - 58
500R12B	EDL	379 - 18
500R13B	EDL	381 - 47
500R14B	EDL	382 - 47
500R15B	EDL	384 -109
500R16B	EDL	386 - 58
500R18B	EDL	388 - 48
500R20B	EDL	390 - 53
500R22B	EDL	391 - 26
500R24B	EDL	391 - 97
500R26B	EDL	392 -103
500R28B	EDL	393 - 39
500R30B	EDL	394 - 84
500R32B	EDL	395 - 24
500R34B	EDL	395 - 41
500R36B	EDL	396 - 11
500R38B	EDL	396 - 35
500R40B	EDL	397 - 63
500R42B	EDL	397 - 90
500R44B	EDL	397 -107
500R46B	EDL	398 - 52
500R48B	EDL	398 - 79
500R50B	EDL	400 - 23
500S10	♦SCO	370 - 2
500S15	♦SCO	384 - 60
500S20	♦SCO	390 - 7
500UDF5A	♦INRB	298 - 27

cont next page

Δ-Registered with JEDEC by this manufacturer

♦-Copy of mfr's data sheet may be ordered from D.A.T.A.

1. TYPE No. CROSS INDEX

IN TYPE NUMBER SEQUENCE

TYPE No.	MFRS	Pg&Line
500UDF5A		
(cont)	INRC	
INRI	♦INRJ	
500UDF10A	♦INRB	307- 10
INRC	INRI	
	♦INRJ	
500UDF20A	♦INRB	318- 74
INRC	INRI	
	♦INRJ	
500UDF30A	♦INRB	326-103
INRC	INRI	
	♦INRJ	
500UDF40A	♦INRB	338- 17
INRC	INRI	
	♦INRJ	
500UDF50A	♦INRB	345- 34
INRC	INRI	
	♦INRJ	
500UDF60A	♦INRB	354- 74
INRC	INRI	
	♦INRJ	
500UDF70A	♦INRB	358- 65
INRC	INRI	
	♦INRJ	
500UDF80A	♦INRB	366- 72
INRC	INRI	
	♦INRJ	
500UDF90A	♦INRB	368- 96
INRC	INRI	
	♦INRJ	
500UDF100A	♦INRB	376- 6
INRC	INRI	
	♦INRJ	
500UDF120A	♦INRB	381- 5
INRC	INRI	
	♦INRJ	
0501	♦EBRG	256- 38
501V60B	♦INRB	354- 71
♦INRC	♦INRI	
	♦INRJ	
501V80B	♦INRB	366- 69
♦INRC	♦INRI	
	♦INRJ	
501V100B	♦INRB	376- 2
♦INRC	♦INRI	
	♦INRJ	
501V120	INRB	380-110
♦INRC	INRI	
	INRJ	
501V120B	♦INRB	381- 1
♦INRC	♦INRI	
	♦INRJ	
501V140	INRB	383- 73
♦INRC	INRI	
	INRJ	
501V140B	♦INRB	383- 74
♦INRC	♦INRI	
	♦INRJ	
501V160	INRB	387- 47
♦INRC	INRI	
	INRJ	
501V180	INRB	388- 92
♦INRC	INRI	
	INRJ	
501V200	INRB	390- 86
♦INRC	INRI	
	INRJ	
501V210	♦INRB	391- 5
♦INRC	♦INRI	
	♦INRJ	
501V220	♦INRB	391- 37
♦INRC	♦INRI	
	♦INRJ	
501V230	♦INRB	391- 55
♦INRC	♦INRI	
	♦INRJ	
501V240	♦INRB	392- 2
♦INRC	♦INRI	
	♦INRJ	
501VR60B	♦INRB	354- 77
♦INRC	♦INRI	
	♦INRJ	
501VR80B	♦INRB	366- 75
♦INRC	♦INRI	
	♦INRJ	
501VR100B	♦INRB	376- 9
♦INRC	♦INRI	
	♦INRJ	
501VR120	INRB	381- 2
♦INRC	INRI	
	INRJ	
501VR120B	♦INRB	381- 8
♦INRC	♦INRI	
	♦INRJ	
501VR140	INRB	383- 75
♦INRC	INRI	
	INRJ	
501VR140B	♦INRB	383- 81
♦INRC	♦INRI	
	♦INRJ	
501VR160	INRB	387- 48
♦INRC	INRI	
	INRJ	
501VR180	INRB	388- 93
♦INRC	INRI	
	INRJ	
501VR200	INRB	390- 87
♦INRC	INRI	
	INRJ	
501VR210	♦INRB	391- 6
♦INRC	♦INRI	
	♦INRJ	
501VR220	♦INRB	391- 38
♦INRC	♦INRI	

TYPE No.	MFRS	Pg&Line
501VR230	♦INRB	391- 56
♦INRC	♦INRI	
	♦INRJ	
501VR240	♦INRB	392- 3
♦INRC	♦INRI	
	♦INRJ	
0502	♦EBRG	258- 93
0504	♦EBRG	259-100
0507	♦EBRG	260- 42
511-3	SES	475- 12
511-4	SES	482- 42
511-6	SES	487- 78
515	PWC	384- 44
520	PWC	389- 93
525	PWC	392- 49
530	PWC	394- 33
540	PWC	396-103
550	PWC	399- 51
550R1B	EDL	303- 63
550R2B	EDL	314- 77
550R3B	EDL	323- 95
550R4B	EDL	333- 69
550R5B	EDL	342- 42
550R6B	EDL	350- 84
550R7B	EDL	356- 79
550R8B	EDL	363- 20
550R9B	EDL	367- 54
550R10B	EDL	373- 18
550R11B	EDL	376- 61
550R12B	EDL	379- 21
550R13B	EDL	381- 48
550R14B	EDL	382- 50
550R15B	EDL	385- 1
550R16B	EDL	386- 62
550R18B	EDL	388- 51
550R20B	EDL	390- 55
550R22B	EDL	391- 27
550R24B	EDL	391- 99
550R26B	EDL	392-104
550R28B	EDL	393- 40
550R30B	EDL	394- 85
550R32B	EDL	395- 25
550R34B	EDL	395- 42
550R36B	EDL	396- 13
550R38B	EDL	396- 36
550R40B	EDL	397- 64
550R42B	EDL	397- 91
550R44B	EDL	397-108
550R46B	EDL	398- 53
550R48B	EDL	398- 81
550R50B	EDL	400- 24
555A	SES	428- 15
555B	SES	437- 75
555C	SES	445- 84
555D	SES	453- 81
555E	SES	460- 15
555F	SES	420- 80
555G	SES	431- 24
555H	SES	441- 43
555M	SES	466- 92
555N	SES	476- 25
555P	SES	483- 11
555PA	SES	486- 23
555PB	SES	488- 28
555PC	SES	490- 80
555S	SES	471- 91
555T	SES	480- 27
556A	SES	428- 16
556B	SES	437- 76
556C	SES	445- 85
556D	SES	453- 82
556E	SES	460- 16
556F	SES	420- 81
556G	SES	431- 25
556H	SES	441- 44
556M	SES	466- 93
556N	SES	476- 26
556P	SES	483- 12
556PA	SES	486- 24
556PB	SES	488- 29
556PC	SES	490- 81
556S	SES	471- 92
556T	SES	480- 28
560	PWC	401- 8
570	PWC	402- 36
580	PWC	403- 74
590	PWC	404- 74
600C	♦TII	247-102
600R1B	EDL	303- 66
600R2B	EDL	314- 81
600R3B	EDL	323- 98
600R4B	EDL	333- 72
600R5B	EDL	342- 45
600R6B	EDL	350- 87
600R7B	EDL	356- 81
600R8B	EDL	363- 22
600R9B	EDL	367- 55
600R10B	EDL	373- 20
600R11B	EDL	376- 62
600R12B	EDL	379- 23
600R13B	EDL	381- 49
600R14B	EDL	382- 51
600R15B	EDL	385- 2
600R16B	EDL	386- 63
600R18B	EDL	388- 52
600R20B	EDL	390- 57
600R22B	EDL	391- 28
600R24B	EDL	391-100
600R26B	EDL	392-105
600R28B	EDL	393- 41
600R30B	EDL	394- 87
600R32B	EDL	395- 26
600R34B	EDL	395- 43
600R36B	EDL	396- 14

TYPE No.	MFRS	Pg&Line
600R38B	EDL	396- 37
600R40B	EDL	397- 66
600R42B	EDL	397- 92
600R44B	EDL	397-109
600R46B	EDL	398- 54
600R48B	EDL	398- 82
600R50B	EDL	400- 26
0601	EBRG	315- 27
601C	♦TII	249- 89
0602	EBRG	324- 30
0604	EBRG	351- 39
604C	♦TII	246- 15
0606	EBRG	367- 77
606C	♦TII	246- 24
0608	EBRG	379- 41
608C	♦TII	246- 57
610C	♦TII	246- 91
612C	♦TII	247- 59
614C	♦TII	248- 93
616C	♦TII	250- 75
618C	♦TII	252- 25
620C	♦TII	254- 52
622C	♦TII	256- 60
624C	♦TII	258- 9
650	♦TII	169- 35
650C0	♦TII	168- 50
650C1	♦TII	168- 52
650C2	♦TII	168- 59
650C3	♦TII	169- 26
650C4	♦TII	169- 36
650C5	♦TII	169- 46
650C6	♦TII	169- 54
650C7	♦TII	170- 18
651	♦TII	171- 38
651C0	♦TII	170- 24
651C1	♦TII	170- 35
651C2	♦TII	170- 42
651C3	♦TII	171- 35
651C4	♦TII	171- 46
651C5	♦TII	171- 62
651C6	♦TII	171- 89
651C7	♦TII	172- 62
651C8	♦TII	172- 66
651C9	♦TII	172- 71
652	♦TII	173-155
652C0	♦TII	172- 74
652C1	♦TII	172- 99
652C2	♦TII	173-152
652C3	♦TII	173-156
652C4	♦TII	173-179
652C5	♦TII	173-187
652C6	♦TII	174- 23
652C7	♦TII	174- 67
652C8	♦TII	175-160
652C9	♦TII	176- 21
653	♦TII	178-188
653C0	♦TII	176-118
653C1	♦TII	176-155
653C2	♦TII	176-180
653C3	♦TII	176-194
653C4	♦TII	178-166
653C5	♦TII	179- 17
653C6	♦TII	179- 19
653C7	♦TII	181- 8
653C8	♦TII	181- 46
653C9	♦TII	181- 48
654C9	♦TII	184-102
655C9	♦TII	187- 73
0700	♦EBRG	300- 71
0701	♦EBRG	311- 56
0702	♦EBRG	330- 38
703A	WESY	296- 92
703B	WESY	304- 75
703C	WESY	308- 29
703D	WESY	315-109
703F	WESY	324- 88
703H	WESY	335- 4
0704	♦EBRG	347- 68
704-34	♦GSE	594- 57
704-34A	♦GSE	594- 58
704-34B	♦GSE	594- 59
705A	WESY	297- 37
0707	♦EBRG	360- 52
0710	♦EBRG	293-106
783B	WESY	307- 7
783D	WESY	318- 71
783F	WESY	326-100
783H	WESY	338- 13
783K	WESY	345- 31
783M	WESY	354- 68
783S	WESY	366- 66
783Z	WESY	375-109
783ZD	WESY	380-107
783ZH	WESY	383- 70
783ZM	WESY	387- 46
783ZS	WESY	388- 91
783ZZ	WESY	390- 85
784A	WESY	298- 28
784B	WESY	307- 11
784C	WESY	309- 27
784D	WESY	318- 77
784E	WESY	320- 3
784F	WESY	326-106
784H	WESY	338- 20
784K	WESY	345- 39
784M	WESY	354- 80
784S	WESY	366- 78
784Z	WESY	376- 14
784ZB	WESY	377- 37
784ZD	WESY	381- 14
800EXD21	TOSJ	392- 92
800FXD21	TOSJ	394-110
800YKD21	TOSJ	393- 12

TYPE No.	MFRS	Pg&Line
801PD60B	♦INRB	354- 84
INRC	♦INRI	
	♦INRJ	
801PD80B	♦INRB	366- 82
INRC	♦INRI	
	♦INRJ	
801PD100B	♦INRB	376- 23
INRC	♦INRI	
	♦INRJ	
801PD120	♦INRB	381- 26
INRC	♦INRI	
	♦INRJ	
801PD120B	♦INRB	381- 27
INRC	♦INRI	
	♦INRJ	
801PD140	♦INRB	383- 93
INRC	♦INRI	
	♦INRJ	
801PD140B	♦INRB	383- 94
INRC	♦INRI	
	♦INRJ	
801PD160	♦INRB	387- 71
INRC	♦INRI	
	♦INRJ	
801PD180	♦INRB	389- 3
INRC	♦INRI	
	♦INRJ	
801PD200	♦INRB	390-105
INRC	♦INRI	
	♦INRJ	
809U51	WESY	417- 85
809V	WESY	480- 76
809Z	WESY	483- 78
815C	PWC	384- 72
820C	PWC	390- 11
830C	PWC	394- 56
840C	PWC	397- 24
850C	PWC	399- 86
860C	PWC	401- 43
870C	PWC	402- 43
880C	PWC	403- 89
890C	PWC	404- 81
0952	EBRG	376- 29
0953	EBRG	387- 78
0954	EBRG	391- 16
0955	EBRG	393- 26
0956	EBRG	395- 29
0957	EBRG	396- 39
0958	EBRG	397- 97
1096J2F	♦ESMF	346- 88
	MISI	
1101	♦EBRG	166- 14
1102	♦EBRG	166-159
1103	♦EBRG	168- 68
1104Δ	♦EBRG	170- 52
1105	♦EBRG	172-114
1106	♦EBRG	176-212
1107	♦EBRG	179- 48
1108	♦EBRG	181-103
1109	♦EBRG	185- 29
1110	♦EBRG	187- 96
1111	♦EBRG	189-142
1112	♦EBRG	191-178
1113	♦EBRG	195-201
1115	♦EBRG	197- 16
1116	♦EBRG	200-145
1118	♦EBRG	201-101
1120	♦EBRG	204- 80
1122	♦EBRG	206- 47
1124	♦EBRG	209-171
1127	♦EBRG	210-116
1130	♦EBRG	212-154
1133	♦EBRG	214-103
1164B	TUNL	317- 11
1164D	TUNL	336- 31
1164F	TUNL	353- 3
1164H	TUNL	365- 20
1164K	TUNL	374- 76
1203	EBRG	169- 17
1204	EBRG	171- 25
1205	EBRG	173-142
1206	EBRG	178-140
1207	EBRG	180-183
1208	EBRG	183- 56
1209	EBRG	186-166
1210	EBRG	189- 78
1211	EBRG	191- 48
1212	EBRG	193-171
1213	EBRG	196- 5
1301	EBRG	166- 62
1302	EBRG	167- 85
1303	EBRG	169- 11
1304	EBRG	171- 18
1305	EBRG	173-133
1306	EBRG	178- 97
1307	EBRG	180-140
1308	EBRG	183- 8
1309	EBRG	186-124
1310	EBRG	189- 22
1311	EBRG	191- 12
1312	EBRG	193-112
1313	EBRG	196- 4
2005	SYN	296- 96
2010	SYN	304- 79
2015	SYN	304- 80
2020	SYN	316- 3
2025	SYN	319- 50
2030	SYN	324- 91
2035	SYN	327- 61
2040	SYN	335- 10
2045	SYN	338- 48
2050	SYN	343- 37
2060	SYN	352- 13
2070	SYN	357- 35

TYPE No.	MFRS	Pg&Line
2080	SYN	364- 44
2105	SYN	297- 3
2110	SYN	304-108
2115	SYN	308- 34
2125	SYN	319- 53
2130	SYN	324-109
2135	SYN	327- 64
2145	SYN	338- 49
2150	SYN	343- 51
2170	SYN	357- 42
2181A	♦WESY	421- 27
2181B	♦WESY	429- 8
2181D	♦WESY	439- 33
2181F	♦WESY	447- 3
2181H	♦WESY	455- 58
2181K	♦WESY	461- 64
2181M	♦WESY	469- 19
2181P	♦WESY	472- 97
2181S	♦WESY	478- 13
2182A	♦WESY	421- 28
2182B	♦WESY	429- 9
2182D	♦WESY	439- 34
2182F	♦WESY	447- 4
2182H	♦WESY	455- 59
2182K	♦WESY	461- 65
2182M	♦WESY	469- 20
2182P	♦WESY	472- 98
2182S	♦WESY	478- 14
2182V	♦WESY	481- 28
2182Z	♦WESY	484- 69
2191A	♦WESY	420- 78
2191B	♦WESY	428- 13
2191D	♦WESY	437- 73
2191F	♦WESY	445- 82
2191H	♦WESY	453- 79
2191K	♦WESY	460- 13
2191M	♦WESY	466- 90
2191P	♦WESY	471- 89
2191S	♦WESY	476- 23
2192A	♦WESY	420- 79
2192B	♦WESY	428- 14
2192D	♦WESY	437- 74
2192F	♦WESY	445- 83
2192H	♦WESY	453- 80
2192K	♦WESY	460- 14
2192M	♦WESY	466- 91
2192P	♦WESY	471- 90
2192S	♦WESY	476- 24
2192V	♦WESY	480- 26
2192Z	♦WESY	483- 10
2201A	♦WESY	421- 24
2201B	WESY	429- 3
2201D	♦WESY	439- 26
2201F	♦WESY	446-105
2201H	♦WESY	455- 50
2201K	WESY	461- 56
2201M	WESY	469- 8
2201P	WESY	472- 92
2201S	♦WESY	478- 4
2202A	♦WESY	421- 25
2202B	♦WESY	429- 4
2202D	♦WESY	439- 27
2202F	WESY	446-106
2202H	WESY	455- 51
2202K	♦WESY	461- 57
2202M	♦WESY	469- 9
2202P	♦WESY	472- 93
2202S	♦WESY	478- 5
2202V	♦WESY	481- 23
2202Z	♦WESY	484- 60
2231A	♦WESY	421- 42
2231B	♦WESY	429- 49
2231D	♦WESY	439- 92
2231F	♦WESY	447- 50
2231H	♦WESY	456- 10
2231K	♦WESY	462- 2
2231M	♦WESY	469- 89
2231P	♦WESY	473- 18
2231S	♦WESY	478- 74
2232A	♦WESY	421- 43
2232B	♦WESY	429- 50
2232D	♦WESY	439- 93
2232F	♦WESY	447- 51
2232H	♦WESY	456- 11
2232K	♦WESY	462- 3
2232M	♦WESY	469- 90
2232P	♦WESY	473- 19
2232S	♦WESY	478- 75
2232V	♦WESY	481- 52
2232Z	♦WESY	485- 7
2248A	♦WESY	421- 44
2248B	♦WESY	429- 51
2248D	♦WESY	439- 94
2248F	♦WESY	447- 52
2248H	♦WESY	456- 12
2248K	♦WESY	462- 4
2248M	♦WESY	469- 91
2248P	♦WESY	473- 20
2248S	♦WESY	478- 76
2248V	♦WESY	481- 53
2248Z	♦WESY	485- 8
2248ZB	♦WESY	487- 16
2248ZD	♦WESY	489- 92
2301	EBRG	283- 79
2302Δ	EBRG	283- 80
2303	EBRG	279-109
2304	EBRG	273- 6
2401	EBRG	264- 65
2403	EBRG	268- 17
2405	EBRG	273- 7
2410	EBRG	280- 2
2415	EBRG	281- 52
2420	EBRG	283- 52
2502	EBRG	283- 62

Δ-Registered with JEDEC by this manufacturer

♦-Copy of mfr's data sheet may be ordered from D.A.T.A.

1. TYPE No. CROSS INDEX

IN TYPE NUMBER SEQUENCE

TYPE No.	MFRS	Pg&Line
2504	EBRG	286- 5
2505A	♦WESY	421- 16
2505B	♦WESY	428- 90
2505C	WESY	431- 73
2505D	♦WESY	438- 88
2505F	♦WESY	446- 80
2505H	♦WESY	455- 3
2505K	♦WESY	461- 32
2505M	♦WESY	468- 67
2505P	♦WESY	472- 78
2505S	♦WESY	477- 66
2505V	♦WESY	481- 7
2505Z	♦WESY	484- 25
2506	EBRG	287- 66
2515A	♦WESY	420- 82
2515B	♦WESY	428- 19
2515C	WESY	431- 26
2515D	♦WESY	437- 80
2515F	♦WESY	445- 90
2515H	♦WESY	453- 87
2515K	♦WESY	460- 24
2515M	♦WESY	466-103
2515P	♦WESY	471- 98
2515S	♦WESY	476- 33
2515V	♦WESY	480- 35
2515Z	♦WESY	483- 18
2541A	♦WESY	420-108
2541B	♦WESY	428- 61
2541D	♦WESY	438- 42
2541F	♦WESY	446- 43
2541H	♦WESY	454- 64
2541K	♦WESY	460- 85
2541M	♦WESY	467-100
2541P	♦WESY	472- 37
2541S	♦WESY	477- 10
2542A	♦WESY	420-109
2542B	♦WESY	428- 62
2542D	♦WESY	438- 43
2542F	♦WESY	446- 44
2542H	♦WESY	454- 65
2542K	♦WESY	460- 89
2542M	♦WESY	467-101
2542P	♦WESY	472- 38
2542S	♦WESY	477- 11
2542V	♦WESY	480- 79
2542Z	♦WESY	483- 83
2602	EBRG	283- 63
2604	EBRG	286- 6
2605A	WESY	421- 35
2605B	WESY	429- 37
2605D	WESY	439- 80
2605F	WESY	447- 39
2605H	WESY	455-109
2605K	WESY	461-102
2605M	WESY	469- 78
2606	EBRG	287- 67
2611	EBRG	280- 10
2612	EBRG	283- 64
2614	EBRG	286- 7
2615A	WESY	421- 29
2615B	WESY	429- 12
2615D	WESY	439- 38
2615F	WESY	447- 7
2615H	WESY	455- 64
2615K	WESY	461- 68
2615M	WESY	469- 25
2702	EBRG	266- 6
2705	EBRG	272- 80
2710	EBRG	279- 54
2912	EBRG	285-104
2913	EBRG	287- 54
2914	EBRG	288- 14
2915	EBRG	288- 68
2916	EBRG	288- 85
2917	EBRG	288- 97
2918	EBRG	288-102
3004	EBRG	190-167
3024	EBRG	190-168
3034	EBRG	184- 5
3035	EBRG	184- 6
3104	EBRG	190-169
3105	SYN	297- 33
3110	SYN	305- 28
3115	SYN	308- 46
3120	SYN	316- 70
3124	EBRG	190-170
3125	SYN	319- 57
3130	SYN	325- 17
3135	SYN	327- 68
3140	SYN	335- 73
3145	SYN	338- 55
3150	SYN	343- 70
3160	SYN	352- 62
3170	SYN	357- 47
3180	SYN	364- 72
3215	SYN	308- 47
3225	SYN	319- 59
3235△	SYN	327- 70
3235⊠	EBRG	184- 7
3245	SYN	338- 56
3270	SYN	357- 51
3280	SYN	364- 80
3535	EBRG	184- 8
3701	♦EBRG	174- 24
3702	EBRG	174- 25
3703	♦EBRG	174- 26
3704	♦EBRG	174- 27
4022-11-00,01,02		524- 48
	AEIL	
4022-12-00,01,02		524- 49
	AEIL	
4022-13-00,01,02		524- 50
	AEIL	

TYPE No.	MFRS	Pg&Line
4032-11-00,01,02		524- 94
	AEIL	
4041-11-00,01,02		521-106
	AEIL	
4124	EBRG	198-173
4125	EBRG	200-149
4126	EBRG	203- 66
4127	EBRG	205-195
4128	EBRG	207-188
4129	EBRG	209-174
4130	EBRG	212- 56
4131	EBRG	214- 52
4132	EBRG	216- 11
4133	EBRG	217- 98
4134	EBRG	218-169
4135	EBRG	220- 56
4136	EBRG	222- 7
4137	EBRG	223-126
4138	EBRG	225- 52
4139	EBRG	226-159
4140	EBRG	228- 46
4141	EBRG	229-146
4142	EBRG	231- 35
4143	EBRG	232-143
4144	EBRG	234- 41
4145△	EBRG	235-152
4145⊠	SYN	338- 61
4146	EBRG	237- 18
4147	EBRG	238- 57
4148	EBRG	240- 33
4149	EBRG	241- 46
4150	EBRG	242-155
4151	EBRG	244- 15
4170	SYN	357- 84
4220	EBRG	189- 79
4221	EBRG	191- 49
4222	EBRG	193-172
4223	EBRG	196- 6
4224	EBRG	198-174
4225	EBRG	200-150
4226	EBRG	203- 67
4227	EBRG	205-196
4228	EBRG	207-189
4229	EBRG	209-175
4230	EBRG	212- 57
4231	EBRG	214- 53
4232	EBRG	216- 12
4233	EBRG	217- 99
4234	EBRG	218-170
4235	EBRG	220- 57
4236	EBRG	222- 8
4237	EBRG	223-127
4238	EBRG	225- 53
4239	EBRG	226-160
4240	EBRG	228- 47
4241	EBRG	229-147
4242	EBRG	231- 36
4243	EBRG	232-144
4244	EBRG	234- 42
4245	EBRG	235-153
4246	EBRG	237- 19
4247	EBRG	238- 58
4248	EBRG	240- 34
4249	EBRG	241- 47
4250	EBRG	242-156
4251	EBRG	244- 16
4320	EBRG	189- 85
4321	EBRG	191- 53
4322	EBRG	193-177
4323	EBRG	196- 7
4324	EBRG	198-180
4325	EBRG	200-151
4326	EBRG	203- 72
4327	EBRG	205-199
4328	EBRG	207-194
4329	EBRG	209-176
4330	EBRG	212- 62
4331	EBRG	214- 56
4332	EBRG	216- 17
4333	EBRG	217-102
4334	EBRG	218-175
4335	EBRG	220- 60
4336	EBRG	222- 13
4337	EBRG	223-130
4338	EBRG	225- 58
4339	EBRG	226-163
4340	EBRG	228- 52
4341	EBRG	229-150
4342	EBRG	231- 39
4343	EBRG	232-146
4344	EBRG	234- 45
4345	EBRG	235-155
4346	EBRG	237- 22
4347	EBRG	238- 59
4348	EBRG	240- 38
4349	EBRG	241- 49
4350	EBRG	242-160
4351	EBRG	244- 17
4420	EBRG	189- 86
4421	EBRG	191- 54
4422	EBRG	193-178
4423	EBRG	196- 8
4424△	EBRG	198-181
4425△	EBRG	200-152
4426	EBRG	203- 73
4427	EBRG	205-200
4428	EBRG	207-195
4429	EBRG	209-177
4430	EBRG	212- 63
4431	EBRG	214- 57
4432	EBRG	216- 18
4433	EBRG	217-103
4434	EBRG	218-176
4435	EBRG	220- 61

TYPE No.	MFRS	Pg&Line
4436	EBRG	222- 14
4437	EBRG	223-131
4438	EBRG	225- 59
4439	EBRG	226-164
4440	EBRG	228- 53
4441	EBRG	229-151
4442	EBRG	231- 40
4443	EBRG	232-147
4444	EBRG	234- 46
4445	EBRG	235-156
4446	EBRG	237- 23
4447	EBRG	238- 60
4448△	EBRG	240- 39
4449	EBRG	241- 50
4450	EBRG	242-161
4451	EBRG	244- 18
4520	EBRG	189- 97
4521	EBRG	191- 64
4522	EBRG	193-190
4523	EBRG	196- 9
4524	EBRG	198-193
4525	EBRG	200-153
4526	EBRG	203- 85
4527	EBRG	206- 9
4528	EBRG	208- 7
4529	EBRG	209-178
4530	EBRG	212- 75
4531	EBRG	214- 67
4532	EBRG	216- 30
4533	EBRG	217-113
4534	EBRG	218-188
4535	EBRG	220- 71
4536	EBRG	222- 26
4537	EBRG	223-141
4538	EBRG	225- 70
4539	EBRG	226-174
4540	EBRG	228- 63
4541	EBRG	229-162
4542	EBRG	231- 49
4543	EBRG	232-156
4544	EBRG	234- 55
4620	EBRG	189- 98
4621	EBRG	191- 65
4622	EBRG	193-191
4623	EBRG	196- 10
4624	EBRG	198-194
4625	EBRG	200-154
4626	EBRG	203- 86
4627	EBRG	206- 10
4628	EBRG	208- 8
4629	EBRG	209-179
4630	EBRG	212- 76
4631	EBRG	214- 68
4632	EBRG	216- 31
4633	EBRG	217-114
4634	EBRG	218-189
4635	EBRG	220- 72
4636	EBRG	222- 27
4637	EBRG	223-142
4638	EBRG	225- 71
4639	EBRG	226-175
4640	EBRG	228- 64
4641	EBRG	229-163
4642	EBRG	231- 50
4643	EBRG	232-157
4644	EBRG	234- 56
5100	PWC	405- 95
5324	EBRG	198-112
5325	EBRG	200-148
5326	EBRG	203- 4
5327	EBRG	205-141
5328	EBRG	207-127
5329	EBRG	209-173
5330	EBRG	211-194
5331	EBRG	214- 2
5332	EBRG	215-158
5333	EBRG	217- 52
5334	EBRG	218-129
5335	EBRG	220- 21
5336	EBRG	221-151
5337	EBRG	223- 92
5338	EBRG	224-183
5339	EBRG	226-124
5340	EBRG	228- 4
5341	EBRG	229-100
5342	EBRG	230-176
5343	EBRG	232-108
5344	EBRG	233-162
5345	EBRG	235-114
5346	EBRG	236-146
5347	EBRG	238- 55
5348	EBRG	239-159
5349	EBRG	241- 48
5350	EBRG	242-120
5351	EBRG	243-157
5501	♦EBRG	165- 29
5502	♦EBRG	165- 63
5503	♦EBRG	165-126
5506	♦EBRG	166- 28
5507	♦EBRG	166-102
5508	♦EBRG	166-191
5509	♦EBRG	167-146
5510	♦EBRG	168- 99
5511	♦EBRG	169- 99
5512	♦EBRG	170- 93
5513	♦EBRG	171-139
5514	♦EBRG	172-179
5515	♦EBRG	174-170
5516	♦EBRG	177- 38
5517	♦EBRG	179- 91
5518	♦EBRG	181-146
5519	♦EBRG	185- 71
5520	♦EBRG	187-139
5521	♦EBRG	189-175

TYPE No.	MFRS	Pg&Line
5522	♦EBRG	192- 19
5523	♦EBRG	194-103
5524	♦EBRG	197- 50
5525	♦EBRG	199- 53
5526	♦EBRG	201-134
5527	♦EBRG	204-106
5528	♦EBRG	206- 75
5529	♦EBRG	208- 73
5530	♦EBRG	210-134
5531	♦EBRG	212-175
5532	♦EBRG	214-124
5533	♦EBRG	216- 76
5534	♦EBRG	217-150
5535	♦EBRG	219- 55
5536	♦EBRG	220-177
5537	♦EBRG	222-132
5538	♦EBRG	224- 24
5539	♦EBRG	225-163
5540	♦EBRG	227- 33
5541	♦EBRG	228-133
7163	♦RCA	577- 8
7701	♦EBRG	165- 31
7701-1.5A	♦VARO	384- 23
7701-2A	♦VARO	389- 70
7701-2X	♦VARO	289- 13
7701-3A	♦VARO	394- 1
7701-3X	♦VARO	289- 36
7701-4A	♦VARO	396- 93
7701-4X	♦VARO	289- 59
7701-5B	♦VARO	399- 43
7701-5X	♦VARO	289- 85
7701-6A	♦VARO	400-101
7701-6X	♦VARO	290- 6
7701-7A	♦VARO	402- 26
7701-7X	♦VARO	290- 25
7701-8A	♦VARO	403- 58
7701-8X	♦VARO	290- 53
7701-9A	♦VARO	404- 62
7701-9X	♦VARO	290- 68
7701-10B	♦VARO	405- 66
7701-10X	♦VARO	290- 84
7701-12A	♦VARO	407- 15
7701-12X	♦VARO	290-106
7701-15A	♦VARO	408- 31
7701-15X	♦VARO	291- 14
7701-18A	♦VARO	409- 48
7701-18X	♦VARO	291- 31
7701-20B	♦VARO	410- 6
7701-20X	♦VARO	291- 40
7702	♦EBRG	165- 67
7706	♦EBRG	166- 61
7707	♦EBRG	166-145
7708	♦EBRG	167- 66
7709	♦EBRG	168- 26
7710	♦EBRG	168-179
7711	♦EBRG	169-177
7712	♦EBRG	170-185
7713	♦EBRG	172- 27
7714	♦EBRG	173-101
7715	♦EBRG	175- 76
7715-3	♦VARO	393- 92
7715-3X	♦VARO	289- 37
7715-4	♦VARO	396- 62
7715-5	♦VARO	399- 16
7715-5X	♦VARO	289- 86
7715-6	♦VARO	400- 83
7715-7	♦VARO	402- 21
7715-7X	♦VARO	290- 26
7715-8	♦VARO	403- 34
7715-9	♦VARO	404- 54
7715-10	♦VARO	405- 41
7715-10X	♦VARO	290- 85
7715-12	♦VARO	406-107
7715-15	♦VARO	408- 18
7715-15X	♦VARO	291- 15
7715-18	VARO	409- 43
7715-20	♦VARO	409-103
7715-20X	♦VARO	291- 41
7715-30	♦VARO	412- 12
7715-30X	♦VARO	291- 67
7715-40	♦VARO	412- 76
7715-40X	♦VARO	291- 82
7715-50	♦VARO	413- 4
7715-50X	♦VARO	291- 94
7716	♦EBRG	178- 37
7717	♦EBRG	180- 80
7718	♦EBRG	182-131
7719	♦EBRG	186- 61
7720	♦EBRG	188-145
7721	♦EBRG	190-131
7722	♦EBRG	193- 37
7723	♦EBRG	195- 70
7724	♦EBRG	198- 41
7725	♦EBRG	200- 19
7726	♦EBRG	202-133
7727	♦EBRG	205- 72
7728	♦EBRG	207- 57
7729	♦EBRG	209- 37
7730	♦EBRG	211-121
7731	♦EBRG	213-118
7732	♦EBRG	215- 85
7733	♦EBRG	216-182
7734	♦EBRG	218- 79
7735	♦EBRG	219-155
7736	♦EBRG	221- 97
7737	♦EBRG	223- 44
7738	♦EBRG	224-129
7739	♦EBRG	226- 75
7740	♦EBRG	227-134
7741	♦EBRG	229- 49
8021B	♦ESMF	510- 87
	MISI	
8021C	♦ESMF	510- 88
	MISI	

TYPE No.	MFRS	Pg&Line
8021D	♦ESMF	510- 89
	MISI	
8021E	♦ESMF	510- 90
	MISI	
8021F	♦ESMF	510- 91
	MISI	
8023B	♦ESMF	512- 59
	MISI	
8023C	♦ESMF	512- 60
	MISI	
8023D	♦ESMF	512- 61
	MISI	
8023E	♦ESMF	512- 62
	MISI	
8023F	♦ESMF	512- 63
	MISI	
8031	♦ESMF	517- 82
	MISI	
8032	♦ESMF	517- 16
	MISI	
8049	♦ESMF	512- 64
	MISI	
8100C	PWC	406- 1
8121B	♦ESMF	510- 92
	MISI	
8121C	♦ESMF	510- 93
	MISI	
8121D	♦ESMF	510- 94
	MISI	
8121E	♦ESMF	510- 95
	MISI	
8121F	♦ESMF	510- 96
	MISI	
8123B	♦ESMF	512- 65
	MISI	
8123C	♦ESMF	512- 66
	MISI	
8123D	♦ESMF	512- 67
	MISI	
8123E	♦ESMF	512- 68
	MISI	
8123F	♦ESMF	512- 69
	MISI	
8131	♦ESMF	517- 83
	MISI	
8132	♦ESMF	517- 17
	MISI	
8149	♦ESMF	512- 70
	MISI	
8150C	PWC	408- 46
8231	♦ESMF	517- 84
	MISI	
8249	♦ESMF	512- 71
	MISI	
9015	EBRG	598- 34
9424	EBRG	289-106
9605	EBRG	175-127
9606	EBRG	178-157
9607	EBRG	179- 33
9649	EBRG	288- 87
9650	EBRG	289- 25
9651	EBRG	289- 70
9652	EBRG	289-108
9970	♦EBRG	166- 82
9971	♦EBRG	167-116
9972	♦EBRG	169- 63
9973	♦EBRG	171- 98
9974	♦EBRG	174-105
9980	EBRG	166-146
9981	EBRG	168- 47
9982	EBRG	170- 8
9983	EBRG	172- 52
9984	EBRG	175-110
9992	EBRG	170- 12
9993	EBRG	172- 56
9994	EBRG	175-121
10912A	TUNL	306- 15
10912AZ	TUNL	308- 87
10912B	TUNL	317- 72
10912C	TUNL	325-110
10912D	TUNL	336- 99
10912E	TUNL	344- 38
10912F	TUNL	353- 63
10912Z	TUNL	297- 88
40108	♦RCA	296- 46
40109	♦RCA	304- 20
40110	♦RCA	315- 45
40111	♦RCA	324- 40
40112	♦RCA	334- 44
40113	♦RCA	342- 91
40114	♦RCA	351- 56
40115	♦RCA	363- 92
40208	♦RCA	296- 99
40209	♦RCA	304- 84
40210	♦RCA	316- 9
40211	♦RCA	324- 94
40212	♦RCA	335- 14
40213	♦RCA	343- 35
40214	♦RCA	352- 11
40216	♦RCA	466- 28
40265	♦RCA	328- 20
40266	♦RCA	302- 66
40267	♦RCA	313- 72
40378	ATEI	433-110
	♦RCA	
40379	ATEI	449-108
	♦RCA	
40428	♦RCA	598- 35
40429	PIR	500- 94
	♦RCA	
40430	PIR	503- 91
	♦RCA	
40431	♦RCA	500- 95
40432	♦RCA	503- 92

△-Registered with JEDEC by this manufacturer

♦-Copy of mfr's data sheet may be ordered from D.A.T.A.

1. TYPE No. CROSS INDEX

IN TYPE NUMBER SEQUENCE

TYPE No.	MFRS	Pg&Line
40485	PIR	500- 96
	♦RCA	
40486	PIR	503- 93
	♦RCA	
40502	♦RCA	500- 97
40503	♦RCA	503- 94
40504	♦RCA	433- 76
40505	♦RCA	449- 79
40506	♦RCA	463- 28
40507	♦RCA	434- 1
40508	♦RCA	449-109
40509	♦RCA	500- 87
40510	♦RCA	503- 84
40511	♦RCA	500- 98
40512	♦RCA	503- 95
40525	PIR	499-107
	♦RCA	
40526	PIR	502- 3
	♦RCA	
40527	PIR	504-108
	♦RCA	
40528	PIR	499-108
	♦RCA	
40529	PIR	502- 4
	♦RCA	
40530	PIR	504-109
	♦RCA	
40531	♦RCA	499-109
40532	♦RCA	502- 5
40533	♦RCA	504-110
40534	♦RCA	499-110
40535	♦RCA	502- 6
40536	♦RCA	505- 1
40553	♦RCA	433- 74
40554	♦RCA	449- 77
40555	♦RCA	463- 26
40561	♦RCA	571- 56
40562	♦RCA	572- 19
40563	♦RCA	572- 81
40564	♦RCA	573- 23
40565	♦RCA	573- 53
40566	♦RCA	571- 50
40567	♦RCA	572- 13
40568	♦RCA	572- 60
40569	♦RCA	573- 8
40570	♦RCA	573- 48
40571	♦RCA	571- 44
40572	♦RCA	571- 99
40573	♦RCA	572- 46
40574	♦RCA	573- 5
40575	PIR	501- 55
	♦RCA	
40576	PIR	504- 52
	♦RCA	
40583	♦RCA	498- 81
40598A	♦RCA	597- 33
40638	♦RCA	500- 99
40639	♦RCA	503- 96
40654	ATEI	434- 84
	♦RCA	
40655	ATEI	450- 80
	♦RCA	
40656	♦RCA	434- 85
40657	♦RCA	450- 81
40658	♦RCA	434- 86
40659	♦RCA	450- 82
40660	♦RCA	502- 86
40661	♦RCA	505- 80
40662	♦RCA	502- 87
40663	♦RCA	505- 81
40664	♦RCA	505- 93
40667	♦RCA	505- 94
40668	♦RCA	502- 33
40669	♦RCA	505- 26
40671	♦RCA	508- 11
40672	♦RCA	508- 12
40680	♦RCA	427- 86
40681	♦RCA	437- 17
40682	♦RCA	453- 16
40683	♦RCA	466- 23
40684	♦RCA	500- 1
40685	♦RCA	502- 7
40686	♦RCA	505- 2
40687	♦RCA	507- 23
40688	♦RCA	502- 91
40689	♦RCA	505- 85
40690	♦RCA	508- 15
40691	♦RCA	500- 74
40692	♦RCA	503- 71
40693	♦RCA	500- 2
40694	♦RCA	502- 8
40695	♦RCA	505- 3
40696	♦RCA	500- 3
40697	♦RCA	502- 9
40698	♦RCA	505- 4
40699	♦RCA	502- 92
40700	♦RCA	505- 86
40701	♦RCA	508- 16
40702	♦RCA	502- 93
40703	♦RCA	505- 87
40704	♦RCA	508- 17
40705	♦RCA	502- 88
40706	♦RCA	505- 82
40707	♦RCA	502- 89
40708	♦RCA	505- 83
40709	♦RCA	508- 13
40710	♦RCA	508- 14
40711	♦RCA	502- 66
40712	♦RCA	505- 58
40713	♦RCA	502- 67
40714	♦RCA	505- 59
40715	♦RCA	502- 68
40716	♦RCA	505- 60
40717	♦RCA	502- 41

TYPE No.	MFRS	Pg&Line
40718	♦RCA	505- 31
40719	♦RCA	502- 42
40720	♦RCA	505- 32
40721	♦RCA	502- 34
40722	♦RCA	505- 27
40723	♦RCA	505- 95
40724	♦RCA	505- 96
40725	♦RCA	502- 17
40726	♦RCA	505- 10
40727	♦RCA	502- 18
40728	♦RCA	505- 11
40729	♦RCA	502- 19
40730	♦RCA	505- 12
40731	♦RCA	502- 2
40732	♦RCA	504-107
40733	♦RCA	502- 14
40734	♦RCA	505- 9
40735	♦RCA	471- 35
40736R	♦RCA	597- 34
40737	♦RCA	425- 49
40738	♦RCA	434- 67
40739	♦RCA	450- 64
40740	♦RCA	463- 97
40741	♦RCA	425- 50
40742	♦RCA	434- 68
40743	♦RCA	450- 65
40744	♦RCA	463- 98
40745	♦RCA	425- 51
40746	♦RCA	434- 69
40747	♦RCA	450- 66
40748	♦RCA	463- 99
40749	♦RCA	426- 55
40750	♦RCA	435- 91
40751	♦RCA	451- 86
40752	♦RCA	464-102
40753	♦RCA	426- 56
40754	♦RCA	435- 92
40755	♦RCA	451- 87
40756	♦RCA	464-103
40757	♦RCA	426- 57
40758	♦RCA	435- 93
40759	♦RCA	451- 88
40760	♦RCA	464-104
40761	♦RCA	500- 75
40762	♦RCA	503- 72
40769	♦RCA	500- 47
40770	♦RCA	503- 44
40771	♦RCA	500- 48
40772	♦RCA	503- 45
40773	♦RCA	500- 76
40774	♦RCA	503- 73
40775	♦RCA	500-100
40776	♦RCA	503- 97
40777	♦RCA	500-101
40778	♦RCA	503- 98
40779	♦RCA	501- 22
40780	♦RCA	504- 19
40781	♦RCA	501- 23
40782	♦RCA	504- 20
40783	♦RCA	501- 56
40784	♦RCA	504- 53
40785	♦RCA	501- 57
40786	♦RCA	504- 54
40795	♦RCA	507- 99
40796	♦RCA	507-100
40797	♦RCA	508- 2
40798	♦RCA	508- 3
40799	♦RCA	502- 43
40800	♦RCA	505- 33
40801	♦RCA	507-101
40802	♦RCA	502- 69
40803	♦RCA	505- 61
40804	♦RCA	508- 4
40805	♦RCA	502- 90
40806	♦RCA	505- 84
40807	♦RCA	508- 5
40808	♦RCA	346- 52
40809	♦RCA	359- 65
40810	♦RCA	424- 21
40811	♦RCA	433- 22
40812	♦RCA	449- 35
40813	♦RCA	462-108
127350A	TUNL	305- 45
127350AZ	TUNL	308- 51
127350B	TUNL	316- 87
127350C	TUNL	325- 29
127350D	TUNL	335- 99
127350E	TUNL	343- 77
127350F	TUNL	352- 85
127350Z	TUNL	297- 44
127351A	TUNL	305- 61
127351AZ	TUNL	308- 57
127351B	TUNL	316-108
127351C	TUNL	325- 44
127351D	TUNL	336- 16
127351E	TUNL	343- 89
127351F	TUNL	352-104
127351Z	TUNL	297- 54
A0000.5A	KMC	566-107
A0000 5B	KMC	566-108
A0000 5C	KMC	566-109
A0000 5D	KMC	566-110
A00001A	KMC	567- 68
A00001B	KMC	567- 69
A00001C	KMC	567- 70
A00001D	KMC	567- 71
A001A0A	KMC	573- 98
A001A0B	KMC	573- 99
A001A0C	KMC	573-100
A001A0D	KMC	573-101
A1A1	EDL	292- 93
A1A5	EDL	292- 94
A1A9	EDL	292- 95
A1A205A	♦AER	570- 16

TYPE No.	MFRS	Pg&Line
A1A205D	♦AER	570- 17
A1A205E	♦AER	570- 18
A1A210A	♦AER	570- 3
A1A210D	♦AER	570- 4
A1A210E	♦AER	570- 5
A1A215A	♦AER	569- 98
A1A215D	♦AER	569- 99
A1A215E	♦AER	569-100
A1A220D	♦AER	569- 91
A1A220E	♦AER	569- 92
A1A225D	♦AER	569- 86
A1A225E	♦AER	569- 87
A1A230D	♦AER	569- 84
A1A230E	♦AER	569- 85
A1A405A	♦AER	570- 64
A1A405D	♦AER	570- 65
A1A405E	♦AER	570- 66
A1A410A	♦AER	570- 56
A1A410D	♦AER	570- 57
A1A410E	♦AER	570- 58
A1A415D	♦AER	570- 50
A1A415E	♦AER	570- 51
A1A420D	♦AER	570- 47
A1A420E	♦AER	570- 48
A1A425D	♦AER	570- 44
A1A425E	♦AER	570- 45
A1A430D	♦AER	570- 42
A1A430E	♦AER	570- 43
A1A605A	♦AER	570- 93
A1A605D	♦AER	570- 94
A1A605E	♦AER	570- 95
A1A610A	♦AER	570- 90
A1A610D	♦AER	570- 91
A1A610E	♦AER	570- 92
A1A615D	♦AER	570- 88
A1A615E	♦AER	570- 89
A1A620D	♦AER	570- 86
A1A620E	♦AER	570- 87
A1A625D	♦AER	570- 84
A1A625E	♦AER	570- 85
A1A630D	♦AER	570- 82
A1A630E	♦AER	570- 83
A1B1	EDL	299- 5
A1B5	EDL	299- 6
A1B9	EDL	299- 7
A1B205A	♦AER	567- 72
A1B205D	♦AER	567- 73
A1B205E	♦AER	567- 74
A1B210A	♦AER	567- 54
A1B210D	♦AER	567- 55
A1B210E	♦AER	567- 56
A1B215A	♦AER	567- 38
A1B215D	♦AER	567- 39
A1B215E	♦AER	567- 40
A1B220A	♦AER	567- 33
A1B220D	♦AER	567- 34
A1B220E	♦AER	567- 35
A1B225D	♦AER	567- 29
A1B225E	♦AER	567- 30
A1B230D	♦AER	567- 26
A1B230E	♦AER	567- 27
A1B405A	♦AER	568- 24
A1B405D	♦AER	568- 25
A1B405E	♦AER	568- 26
A1B410A	♦AER	568- 18
A1B410D	♦AER	568- 19
A1B410E	♦AER	568- 20
A1B415A	♦AER	568- 12
A1B415D	♦AER	568- 13
A1B415E	♦AER	568- 14
A1B420A	♦AER	568- 6
A1B420D	♦AER	568- 7
A1B420E	♦AER	568- 8
A1B425A	♦AER	567-107
A1B425D	♦AER	567-108
A1B425E	♦AER	567-109
A1B430D	♦AER	567-105
A1B430E	♦AER	567-106
A1B605A	♦AER	568- 27
A1B605D	♦AER	568- 28
A1B605E	♦AER	568- 29
A1B610A	♦AER	568- 21
A1B610D	♦AER	568- 22
A1B610E	♦AER	568- 23
A1B615A	♦AER	568- 15
A1B615D	♦AER	568- 16
A1B615E	♦AER	568- 17
A1B620A	♦AER	568- 9
A1B620D	♦AER	568- 10
A1B620E	♦AER	568- 11
A1B625A	♦AER	568- 3
A1B625D	♦AER	568- 4
A1B625E	♦AER	568- 5
A1B630A	♦AER	567-110
A1B630D	♦AER	568- 1
A1B630E	♦AER	568- 2
A1C1	EDL	309- 75
A1C5	EDL	309- 76
A1C9	EDL	309- 77
A1D1	EDL	320- 36
A1D5	EDL	320- 37
A1D9	EDL	320- 38
A1D207A	♦AER	566- 33
A1D207E	♦AER	566- 34
A1D210A	♦AER	566- 36
A1D210E	♦AER	566- 37
A1D215A	♦AER	566- 40
A1D215E	♦AER	566- 41
A1D220A	♦AER	566- 44
A1D220E	♦AER	566- 45
A1D307A	♦AER	566- 61
A1D307E	♦AER	566- 62
A1D310A	♦AER	566- 65
A1D310E	♦AER	566- 66

TYPE No.	MFRS	Pg&Line
A1D315A	♦AER	566- 69
A1D315E	♦AER	566- 70
A1D320A	♦AER	566- 73
A1D320E	♦AER	566- 74
A1D407A	♦AER	566- 85
A1D407E	♦AER	566- 86
A1D410A	♦AER	566- 87
A1D410E	♦AER	566- 88
A1D415A	♦AER	566- 89
A1D415E	♦AER	566- 90
A1D420A	♦AER	566- 91
A1D420E	♦AER	566- 92
A1D607A	♦AER	567- 17
A1D607E	♦AER	567- 18
A1D610A	♦AER	567- 19
A1D610E	♦AER	567- 20
A1D615A	♦AER	567- 21
A1D615E	♦AER	567- 22
A1D620A	♦AER	567- 23
A1D620E	♦AER	567- 24
A1E1	EDL	328- 29
A1E5	EDL	328- 30
A1E9	EDL	328- 31
A1E207A	♦AER	573- 70
A1E207E	♦AER	566- 35
A1E210A	♦AER	566- 38
A1E210E	♦AER	566- 39
A1E215A	♦AER	566- 42
A1E215E	♦AER	566- 43
A1E220A	♦AER	566- 46
A1E220E	♦AER	566- 47
A1E307A	♦AER	566- 63
A1E307E	♦AER	566- 64
A1E310A	♦AER	566- 67
A1E310E	♦AER	566- 68
A1E315A	♦AER	566- 71
A1E315E	♦AER	566- 72
A1E320A	♦AER	566- 75
A1E320E	♦AER	566- 76
A1E407A	♦AER	566- 77
A1E407E	♦AER	566- 78
A1E410A	♦AER	566- 79
A1E410E	♦AER	566- 80
A1E415A	♦AER	566- 81
A1E415E	♦AER	566- 82
A1E420A	♦AER	566- 83
A1E420E	♦AER	566- 84
A1E507A	♦AER	567- 9
A1E507E	♦AER	567- 10
A1E510A	♦AER	567- 11
A1E510E	♦AER	567- 12
A1E515A	♦AER	567- 13
A1E515E	♦AER	567- 14
A1E520A	♦AER	567- 15
A1E520E	♦AER	567- 16
A1F1	EDL	338-110
A1F5	EDL	339- 1
A1F9	EDL	339- 2
A1G1	EDL	345- 94
A1G5	EDL	345- 95
A1G9	EDL	345- 96
A1G205A	♦AER	568- 96
A1G205D	♦AER	568- 97
A1G205E	♦AER	568- 98
A1G210A	♦AER	568- 93
A1G210D	♦AER	568- 94
A1G210E	♦AER	568- 95
A1G215A	♦AER	568- 90
A1G215D	♦AER	568- 91
A1G215E	♦AER	568- 92
A1G220D	♦AER	568- 88
A1G220E	♦AER	568- 89
A1G225D	♦AER	568- 86
A1G225E	♦AER	568- 87
A1G230D	♦AER	568- 84
A1G230E	♦AER	568- 85
A1G240D	♦AER	568- 82
A1G240E	♦AER	568- 83
A1G250D	♦AER	568- 80
A1G250E	♦AER	568- 81
A1G405A	♦AER	569- 43
A1G405D	♦AER	569- 44
A1G405E	♦AER	569- 45
A1G410A	♦AER	569- 33
A1G410D	♦AER	569- 34
A1G410E	♦AER	569- 35
A1G415A	♦AER	569- 15
A1G415D	♦AER	569- 16
A1G415E	♦AER	569- 17
A1G420D	♦AER	569- 9
A1G420E	♦AER	569- 10
A1G425D	♦AER	569- 6
A1G425E	♦AER	569- 7
A1G430D	♦AER	569- 3
A1G430E	♦AER	569- 4
A1G440D	♦AER	568-110
A1G440E	♦AER	569- 1
A1G450D	♦AER	568-108
A1G450E	♦AER	568-109
A1G605A	♦AER	570- 21
A1G605D	♦AER	570- 22
A1G605E	♦AER	570- 23
A1G610A	♦AER	570- 13
A1G610D	♦AER	570- 14
A1G610E	♦AER	570- 15
A1G615A	♦AER	570- 6
A1G615D	♦AER	570- 7
A1G615E	♦AER	570- 8
A1G620A	♦AER	569-110
A1G620D	♦AER	570- 1
A1G620E	♦AER	570- 2
A1G625A	♦AER	569-101
A1G625D	♦AER	569-102
A1G625E	♦AER	569-103

TYPE No.	MFRS	Pg&Line
A1G630D	♦AER	569- 95
A1G630E	♦AER	569- 96
A1G640D	♦AER	569- 93
A1G640E	♦AER	569- 94
A1G650D	♦AER	569- 88
A1G650E	♦AER	569- 89
A1H001A	♦AER	573- 86
A1H1	EDL	355- 6
A1H003A	♦AER	567- 82
A1H005A	♦AER	571- 42
A1H5	EDL	355- 7
A1H9	EDL	355- 8
A1H010A	♦AER	567- 98
A1H020A	♦AER	572- 79
A1H050A	♦AER	573- 36
A1H100A	♦AER	573- 66
A1H200A	♦AER	573- 82
A1K1	EDL	359- 11
A1K5	EDL	359- 12
A1K9	EDL	359- 13
A1M1	EDL	369- 57
A1M5	EDL	369- 58
A1M9	EDL	369- 59
A1N1	EDL	377- 59
A1N5	EDL	377- 60
A1N9	EDL	377- 61
A1R001A	♦AER	567- 5
A1R003A	♦AER	573- 96
A1R005A	♦AER	573-106
A1R010A	♦AER	573-107
A1R020A	♦AER	573-108
A1R050A	♦AER	573-109
A1R100A	♦AER	573-110
A1R200A	♦AER	574- 1
A2A1	EDL	293- 42
A2A4	EDL	293- 19
A2A5	EDL	293- 43
A2A9	EDL	293- 44
A2B1	EDL	299- 90
A2B4	EDL	299- 49
A2B5	EDL	299- 91
A2B9	EDL	299- 92
A2C1	EDL	310- 59
A2C4	EDL	310- 11
A2C5	EDL	310- 60
A2C9	EDL	310- 61
A2D1	EDL	320-102
A2D4	EDL	320- 73
A2D5	EDL	320-103
A2D9	EDL	320-104
A2E1	EDL	329- 25
A2E4	EDL	328- 77
A2E5	EDL	329- 26
A2E9	EDL	329- 27
A2F1	EDL	339- 71
A2F4	EDL	339- 36
A2F5	EDL	339- 72
A2F9	EDL	339- 73
A2G1	EDL	346- 67
A2G4	EDL	346- 23
A2G5	EDL	346- 68
A2G9	EDL	346- 69
A2G132	♦AER	515- 60
A2G133	♦AER	515- 61
A2G172	♦AER	512- 72
A2G173	♦AER	512- 73
A2H1	EDL	355- 32
A2H4	EDL	355- 19
A2H5	EDL	355- 33
A2H9	EDL	355- 34
A2K1	EDL	359- 77
A2K4	EDL	359- 40
A2K5	EDL	359- 78
A2K9	EDL	359- 79
A2M1	EDL	370- 18
A2M4	EDL	369- 94
A2M5	EDL	370- 19
A2M9	EDL	370- 20
A2N1	EDL	377- 87
A2N4	EDL	377- 77
A2N5	EDL	377- 88
A2N9	EDL	377- 89
A2S101	♦AER	512- 74
A2S102	♦AER	512- 75
A2S103	♦AER	512- 76
A2S106	♦AER	512- 77
A2S107	♦AER	512- 78
A2S108	♦AER	512- 79
A2S122	♦AER	515- 62
A2S123	♦AER	515- 63
A2S128	♦AER	515- 64
A2S201	♦AER	518- 16
A2S202	♦AER	518- 17
A2S206	♦AER	518- 18
A2S207	♦AER	518- 19
A2S301	AER	592- 89
A2S312	AER	592- 90
A2S313	AER	592- 91
A3A1	EDL	293- 56
A3A3	EDL	293- 77
A3A5	EDL	293- 57
A3A9	EDL	293- 58
A3B1	EDL	300- 1
A3B3	EDL	300- 31
A3B5	EDL	300- 2
A3B9	EDL	300- 3
A3C1	EDL	310- 84
A3C3	EDL	311- 8
A3C5	EDL	310- 85
A3C9	EDL	310- 86
A3D1	EDL	321- 9
A3D3	EDL	321- 37
A3D5	EDL	321- 10
A3D9	EDL	321- 11

Δ-Registered with JEDEC by this manufacturer

♦-Copy of mfr's data sheet may be ordered from D.A.T.A.

1. TYPE No. CROSS INDEX

IN TYPE NUMBER SEQUENCE

TYPE No.	MFRS	Pg&Line
A3E1	EDL	329- 54
A3E3	EDL	329- 93
A3E5	EDL	329- 55
A3E9	EDL	329- 56
A3F1	EDL	339- 94
A3F3	EDL	340- 10
A3F5	EDL	339- 95
A3F9	EDL	339- 96
A3G1	EDL	346- 89
A3G3	EDL	347- 14
A3G5	EDL	346- 90
A3G9	EDL	346- 91
A3H1	EDL	355- 43
A3H3	EDL	355- 53
A3H5	EDL	355- 44
A3H9	EDL	355- 45
A3K1	EDL	359- 99
A3K3	EDL	360- 9
A3K5	EDL	359-100
A3K9	EDL	359-101
A3M1	EDL	370- 39
A3M3	EDL	370- 53
A3M5	EDL	370- 40
A3M9	EDL	370- 41
A3N1	EDL	377-100
A3N3	EDL	377-110
A3N5	EDL	377-101
A3N9	EDL	377-102
A4A1	EDL	293- 94
A4A5	EDL	293- 95
A4A9	EDL	293- 96
A4B1	EDL	300- 60
A4B5	EDL	300- 61
A4B9	EDL	300- 62
A4C1	EDL	311- 44
A4C5	EDL	311- 45
A4C9	EDL	311- 46
A4D1	EDL	321- 65
A4D5	EDL	321- 66
A4D9	EDL	321- 67
A4E1	EDL	330- 24
A4E5	EDL	330- 25
A4E9	EDL	330- 26
A4F1	EDL	340- 35
A4F5	EDL	340- 36
A4F9	EDL	340- 37
A4G1	EDL	347- 52
A4G5	EDL	347- 53
A4G9	EDL	347- 54
A4H1	EDL	355- 58
A4H5	EDL	355- 59
A4H9	EDL	355- 60
A4K1	EDL	360- 34
A4K5	EDL	360- 35
A4K9	EDL	360- 36
A4M1	EDL	370- 77
A4M5	EDL	370- 78
A4M9	EDL	370- 79
A4N1	EDL	378- 8
A4N5	EDL	378- 9
A4N9	EDL	378- 10
A4S360J	♦ AER	596- 85
A4S360K	♦ AER	596- 86
A4S370I	♦ AER	596- 87
A4S370J	♦ AER	596- 88
A4S375I	♦ AER	596- 89
A4S375J	♦ AER	596- 90
A00005A	KMC	571- 23
A00005B	KMC	571- 24
A00005C	KMC	571- 25
A00005D	KMC	571- 26
A5A1	EDL	293-107
A5A2	EDL	292- 90
A5A5	EDL	293-108
A5A9	EDL	293-109
A5B1	EDL	300- 72
A5B2	EDL	299- 2
A5B5	EDL	300- 73
A5B9	EDL	300- 74
A5C1	EDL	311- 57
A5C2	EDL	311- 89
A5C5	EDL	311- 58
A5C9	EDL	311- 59
A5D1	EDL	321- 76
A5D2	EDL	320- 33
A5D5	EDL	321- 77
A5D9	EDL	321- 78
A5E1	EDL	330- 39
A5E2	EDL	330- 71
A5E5	EDL	330- 40
A5E9	EDL	330- 41
A5F1	EDL	340- 48
A5F2	EDL	338-108
A5F5	EDL	340- 49
A5F9	EDL	340- 50
A5G1	EDL	347- 69
A5G2	EDL	347- 98
A5G5	EDL	347- 70
A5G9	EDL	347- 71
A5H1	EDL	355- 69
A5H2	EDL	355- 89
A5H5	EDL	355- 70
A5H9	EDL	355- 71
A5K1	EDL	360- 53
A5K2	EDL	361- 14
A5K5	EDL	360- 54
A5K9	EDL	360- 55
A5M1	EDL	370- 95
A5M2	EDL	371- 49
A5M5	EDL	370- 96
A5M9	EDL	370- 97
A5N1	EDL	378- 21
A5N2	EDL	378- 41
A5N5	EDL	378- 22

TYPE No.	MFRS	Pg&Line
A5N9	EDL	378- 23
A5S100	♦ AER	582- 76
A5S104	♦ AER	582- 77
A5S105	♦ AER	582- 78
A5S106	♦ AER	582- 79
A5S107	♦ AER	582- 80
A5S110	♦ AER	582- 81
A5S113	♦ AER	582- 82
A5S114	♦ AER	582- 83
A5S115	♦ AER	582- 84
A5S116	♦ AER	582- 85
A5S138	AER	582- 86
A5S301	AER	582- 87
A5S302	AER	582- 88
A5S339	AER	582- 89
A5S342	AER	582- 90
A6A1	EDL	294- 60
A6A5	EDL	294- 61
A6A9	EDL	294- 62
A6B1	EDL	301- 54
A6B5	EDL	301- 55
A6B9	EDL	301- 56
A6C1	EDL	312- 54
A6C5	EDL	312- 55
A6C9	EDL	312- 56
A6D1	EDL	322- 21
A6D5	EDL	322- 22
A6D9	EDL	322- 23
A6E1	EDL	331- 36
A6E5	EDL	331- 37
A6E9	EDL	331- 38
A6F1	EDL	340-101
A6F5	EDL	340-102
A6F9	EDL	340-103
A6G1	EDL	348- 59
A6G5	EDL	348- 60
A6G9	EDL	348- 61
A6H1	EDL	355- 97
A6H5	EDL	355- 98
A6H9	EDL	355- 99
A6K1	EDL	361- 31
A6K5	EDL	361- 32
A6K9	EDL	361- 33
A6M1	EDL	371- 65
A6M5	EDL	371- 66
A6M9	EDL	371- 67
A6N1	EDL	378- 50
A6N5	EDL	378- 51
A6N9	EDL	378- 52
A7A1	EDL	294- 75
A7A5	EDL	294- 76
A7A9	EDL	294- 77
A7B1	EDL	301- 76
A7B5	EDL	301- 77
A7B9	EDL	301- 78
A7C1	EDL	312- 73
A7C5	EDL	312- 74
A7C9	EDL	312- 75
A7D1	EDL	322- 38
A7D5	EDL	322- 39
A7D9	EDL	322- 40
A7E1	EDL	331- 59
A7E5	EDL	331- 60
A7E9	EDL	331- 61
A7F1	EDL	341- 7
A7F5	EDL	341- 8
A7F9	EDL	341- 9
A7G1	EDL	348- 84
A7G5	EDL	348- 85
A7G9	EDL	348- 86
A7H1	EDL	355-108
A7H5	EDL	355-109
A7H9	EDL	355-110
A7K1	EDL	361- 52
A7K5	EDL	361- 53
A7K9	EDL	361- 54
A7M1	EDL	371- 81
A7M5	EDL	371- 82
A7M9	EDL	371- 83
A7N1	EDL	378- 66
A7N5	EDL	378- 67
A7N9	EDL	378- 68
A00010A	KMC	571-104
A00010B	KMC	571-105
A00010C	KMC	571-106
A00010D	KMC	571-107
A13	♦ APX	281- 11
A14A	♦ GESY	301- 34
A14C	GESY	322- 61
A14E	GESY	341- 29
A14F	♦ GESY	294- 44
A14P	♦ GESY	371- 47
A15A	♦ GESY	280- 3
A15F	♦ GESY	273- 8
A00020A	KMC	572- 61
A00020B	KMC	572- 62
A00020C	KMC	572- 63
A00020D	KMC	572- 64
A20G	♦ APX	246- 2
A20H	♦ APX	246- 3
A23	♦ APX	250- 6
A27	♦ APX	534- 4
A28	♦ APX	529- 21
A28A	♦ GESY	278- 69
A28B	♦ GESY	282- 22
A28C	♦ GESY	284- 17
A28D	♦ GESY	285- 1
A28F	♦ GESY	272- 10
A40A	GESY	304- 96
A40B	GESY	316- 21
A40C	GESY	324- 99
A40D	GESY	335- 24
A40E	GESY	343- 40
A40F	GESY	296-106

TYPE No.	MFRS	Pg&Line
A40M	GESY	352- 23
A41A	GESY	304- 97
A41B	GESY	316- 22
A41C	GESY	324-100
A41D	GESY	335- 25
A41E	GESY	343- 41
A41F	GESY	296-107
A41M	GESY	352- 24
A44A	♦ GESY	304- 98
A44B	♦ GESY	316- 23
A44C	♦ GESY	324-101
A44D	♦ GESY	335- 26
A44E	♦ GESY	343- 42
A44F	♦ GESY	296-108
A44M	♦ GESY	352- 25
A45	♦ APX	259- 31
A48	♦ APX	259- 36
A00050A	KMC	573- 24
A00050B	KMC	573- 25
A00050C	KMC	573- 26
A00050D	KMC	573- 27
A50	APX	312- 44
	SCN	
A51	APX	294- 51
A70A	GESY	306- 4
A70B	GESY	317- 59
A70C	GESY	325- 97
A70D	GESY	336- 85
A70E	GESY	344- 22
A70M	GESY	353- 47
A70N	GESY	365- 60
A70P	GESY	374-110
A70PA	GESY	376- 86
A70PB	GESY	380- 12
A70S	GESY	357- 86
A70T	GESY	368- 21
A71A	GESY	306- 5
A71B	GESY	317- 60
A71C	GESY	325- 98
A71D	GESY	336- 86
A71E	GESY	344- 23
A71M	GESY	353- 48
A71N	GESY	365- 61
A71P	GESY	375- 1
A71PA	GESY	376- 87
A71PB	GESY	380- 13
A71S	GESY	357- 87
A71T	GESY	368- 22
A74	♦ APX	406- 89
A82	♦ APX	248- 70
A90A	GESY	306- 70
A90B	GESY	318- 21
A90C	GESY	326- 55
A90D	GESY	337- 63
A90E	GESY	344- 92
A90M	GESY	354- 14
A90N	GESY	366- 18
A90P	GESY	375- 60
A90PA	GESY	376-107
A90PB	GESY	380- 58
A90S	GESY	358- 19
A90T	GESY	368- 57
A91A	GESY	306- 71
A91B	GESY	318- 22
A91C	GESY	326- 56
A91D	GESY	337- 64
A91E	GESY	344- 93
A91M	GESY	354- 15
A91N	GESY	366- 19
A91P	GESY	375- 61
A91PA	GESY	376-108
A91PB	GESY	380- 59
A91S	GESY	358- 20
A91T	GESY	368- 58
A96A	♦ GESY	306- 61
A96B	♦ GESY	318- 12
A96C	♦ GESY	326- 47
A96D	♦ GESY	337- 52
A96E	♦ GESY	344- 83
A96M	♦ GESY	354- 3
A96N	♦ GESY	366- 7
A96P	♦ GESY	375- 50
A96S	♦ GESY	358- 12
A96T	♦ GESY	368- 52
A97A	♦ GESY	306- 62
A97B	♦ GESY	318- 13
A97C	♦ GESY	326- 48
A97D	♦ GESY	337- 53
A97E	♦ GESY	344- 84
A97M	♦ GESY	354- 4
A97N	♦ GESY	366- 8
A97P	♦ GESY	375- 51
A97S	♦ GESY	358- 13
A97T	♦ GESY	368- 53
A00100A	KMC	573- 54
A00100B	KMC	573- 55
A00100C	KMC	573- 56
A00100D	KMC	573- 57
A100	SCN	300- 32
A114A	♦ GESY	278- 87
A114B	♦ GESY	282- 42
A114C	♦ GESY	284- 30
A114D	♦ GESY	285- 15
A114E	♦ GESY	286- 30
A114F	♦ GESY	272- 30
A114M	♦ GESY	286- 86
A121-1	PWC	301- 79
A121-2	PWC	312- 76
A121-4	PWC	331- 62
A121-05	PWC	294- 78
A121-6	PWC	348- 87
A121-8	PWC	361- 55
A129E	GESY	342-100
A129M	GESY	351- 65

TYPE No.	MFRS	Pg&Line
A129N	GESY	363-100
A129P	GESY	373- 82
A129PB	GESY	379- 50
A132-1	PWC	301- 80
A132-2	PWC	312- 77
A132-4	PWC	331- 63
A132-05	PWC	294- 79
A132-6	PWC	348- 88
A132-8	PWC	361- 56
A138-1	PWC	302-105
A138-2	PWC	314- 5
A138-3	PWC	323- 40
A138-4	PWC	332-107
A138-05	PWC	295- 68
A138-5	PWC	341-108
A138-6	PWC	350- 15
A138-7	PWC	356- 61
A138-8	PWC	362- 76
A139E	GESY	343- 54
A139M	GESY	352- 42
A139N	GESY	364- 65
A139P	GESY	374- 35
A139PB	GESY	379- 71
A168-1	PWC	301- 81
A168-2	PWC	312- 78
A168-3	PWC	322- 41
A168-4	PWC	331- 64
A168-05	PWC	294- 80
A168-5	PWC	341- 10
A168-6	PWC	348- 89
A168-7	PWC	356- 1
A168-8	PWC	361- 57
A00200A	KMC	573- 71
A00200B	KMC	573- 72
A00200C	KMC	573- 73
A00200D	KMC	573- 74
A291PC	GESY	381- 72
A291PD	GESY	383- 20
A291PE	GESY	385- 42
A291PM	GESY	387- 7
A291PN	GESY	388- 74
A291PS	GESY	387- 87
A295B	GESY	318- 75
A295C	GESY	326-104
A295D	GESY	338- 18
A295E	GESY	345- 35
A295M	GESY	354- 75
A295N	GESY	366- 73
A295P	GESY	376- 7
A295PA	GESY	377- 34
A295PB	GESY	381- 6
A295PC	GESY	381-104
A295PD	GESY	383- 79
A295PE	GESY	385- 78
A295PM	GESY	387- 52
A295PN	GESY	388- 96
A295PS	GESY	387- 99
A295S	GESY	358- 66
A295T	GESY	368- 97
A296B	GESY	318- 76
A296C	GESY	326-105
A296D	GESY	338- 19
A296E	GESY	345- 36
A296M	GESY	354- 76
A296N	GESY	366- 74
A296P	GESY	376- 8
A296PA	GESY	377- 35
A296PB	GESY	381- 7
A296PC	GESY	381-105
A296PD	GESY	383- 80
A296PE	GESY	385- 79
A296PM	GESY	387- 53
A296PN	GESY	388- 97
A296PS	GESY	387-100
A296S	GESY	358- 67
A296T	GESY	368- 98
A300	SCN	321- 38
A390A	♦ GESY	306-110
A390B	♦ GESY	318- 64
A390C	♦ GESY	326- 93
A390D	♦ GESY	338- 4
A390E	♦ GESY	345- 23
A390M	♦ GESY	354- 59
A390N	♦ GESY	366- 60
A390P	♦ GESY	375-102
A390PA	♦ GESY	377- 28
A390PB	♦ GESY	380-102
A390S	♦ GESY	358- 56
A390T	♦ GESY	368- 88
A396A	GESY	306-108
A396B	GESY	318- 61
A396C	GESY	326- 91
A396D	GESY	337-110
A396E	GESY	345- 20
A396M	GESY	354- 56
A396N	GESY	366- 57
A396P	GESY	375- 98
A396S	GESY	358- 54
A396T	GESY	368- 87
A400	SCN	329- 94
A00500A	KMC	573- 87
A00500B	KMC	573- 88
A00500C	KMC	573- 89
A00500D	KMC	573- 90
A0500 5A	KMC	566- 99
A0500 5B	KMC	566-100
A0500.5C	KMC	566-101
A0500 5D	KMC	566-102
A500	SCN	340- 11
A500L	♦ GESY	390-101
A500LA	♦ GESY	391- 13
A500LB	♦ GESY	391- 48
A500LC	♦ GESY	391- 60
A500LD	♦ GESY	392- 9

TYPE No.	MFRS	Pg&Line
A500LE	♦ GESY	392- 88
A500LM	♦ GESY	393- 5
A500LN	♦ GESY	393- 50
A500LP	♦ GESY	394-109
A500LS	♦ GESY	393- 11
A500LT	♦ GESY	393- 58
A500P	♦ GESY	376- 22
A500PA	♦ GESY	377- 45
A500PB	♦ GESY	381- 22
A500PC	♦ GESY	382- 2
A500PD	♦ GESY	383- 92
A500PE	♦ GESY	385- 89
A500PM	♦ GESY	387- 67
A500PN	♦ GESY	388-110
A500PS	♦ GESY	387-108
A500PT	♦ GESY	389- 20
A502GE	ESMF	598- 36
	MISI	
A503GE	ESMF	598- 37
	MISI	
A504GE	ESMF	598- 38
	MISI	
A516	♦ TII	263- 70
A517	♦ TII	263-107
A540A	♦ GESY	307- 15
A540B	♦ GESY	318- 81
A540C	♦ GESY	327- 1
A540D	♦ GESY	338- 26
A540E	♦ GESY	345- 43
A540L	♦ GESY	390-106
A540M	♦ GESY	354- 85
A540N	♦ GESY	366- 83
A540P	♦ GESY	376- 24
A540PA	♦ GESY	377- 46
A540PB	♦ GESY	381- 28
A540PC	♦ GESY	382- 3
A540PD	♦ GESY	383- 95
A540PE	♦ GESY	385- 90
A540PM	♦ GESY	387- 72
A540PN	♦ GESY	389- 4
A540PS	♦ GESY	387-109
A540PT	♦ GESY	389- 21
A540S	♦ GESY	358- 70
A540T	♦ GESY	368-105
A570A	♦ GESY	307- 18
A570B	♦ GESY	318- 84
A570C	♦ GESY	327- 4
A570D	♦ GESY	338- 29
A570E	♦ GESY	345- 45
A570M	♦ GESY	354- 86
A570N	♦ GESY	366- 84
A570P	♦ GESY	376- 26
A570S	♦ GESY	358- 71
A570T	♦ GESY	368-106
A600	SCN	347- 15
A600,1,2	♦ TII	527- 75
	TIIB	
A610,1,2	♦ TII	527- 76
	TIIB	
A706-3A,B,C,D,E,F		
	♦ TII	TIIB 524- 95
A706-3G,H,I,J,K,L		
	♦ TII	TIIB 524- 96
A706-3M,N	♦ TII	524- 97
	TIIB	
A706-4A,B,C,D,E,F		
	♦ TII	TIIB 524- 98
A706-4G,H,I,J,K,L		
	♦ TII	TIIB 524- 99
A706-4M	♦ TII	524-100
	TIIB	
A706-5A,B,C,D,E,F		
	♦ TII	TIIB 524-101
A706-5G,H,I,J,K,L		
	♦ TII	TIIB 524-102
A706-5M	♦ TII	524-103
	TIIB	
A706-6A,B,C,D,E,F		
	♦ TII	TIIB 524-104
A706-6G,H,I,J,K,L		
	♦ TII	TIIB 524-105
A706-7A,B,C,D,E,F		
	♦ TII	TIIB 524-106
A706-7G,H,I,J		524-107
	♦ TII	TIIB
A706-8A,B,C,D,E,F		
	♦ TII	TIIB 524-108
A706-8G,H	♦ TII	524-109
A707-3A,B,C,D,E,F		
	♦ TII	527- 53
A707-3G,H,I,J,K,L		
	♦ TII	527- 54
A707-3M	♦ TII	527- 55
A707-4A,B,C,D,E,F		
	♦ TII	527- 56
A707-4G,H,I,J,K,L		
	♦ TII	527- 57
A707-5A,B,C,D,E,F		
	♦ TII	527- 58
A707-5G,H,I,J,K,L		
	♦ TII	527- 59
A707-6A,B,C,D,E,F		
	♦ TII	527- 60
A707-6G,H,I,J,K		527- 61
	♦ TII	
A707-7A,B,C,D,E,F		
	♦ TII	527- 62
A707-7G,H,I	♦ TII	527- 63
A707-8A,B,C,D,E,F		
	♦ TII	527- 64
A707-8G	♦ TII	527- 65
A708-3A,B,C,D,E,F		
	♦ TII	529- 22

Δ-Registered with JEDEC by this manufacturer

♦-Copy of mfr's data sheet may be ordered from D.A.T.A.

1. TYPE No. CROSS INDEX

IN TYPE NUMBER SEQUENCE

TYPE No.	MFRS	Pg&Line
A708-3G,H,I,J,K	♦TII	529 - 23
A708-4A,B,C,D,E,F	♦TII	529 - 24
A708-4G,H,I,J	♦TII	529 - 25
A708-5A,B,C,D,E,F	♦TII	529 - 26
A708-5G,H,I,J	♦TII	529 - 27
A708-6A,B,C,D,E,F	♦TII	529 - 28
A708-6G,H,I	♦TII	529 - 29
A708-7A,B,C,D,E,F	♦TII	529 - 30
A708-7G	♦TII	529 - 31
A708-8A,B,C,D,E,F	♦TII	529 - 32
A709-3A,B,C,D,E,F	♦TII	532 - 22
A709-3G,H,I,J	♦TII	532 - 23
A709-4A,B,C,D,E,F	♦TII	532 - 24
A709-4G,H	♦TII	532 - 25
A709-5A,B,C,D,E,F	♦TII	532 - 26
A709-5G,H	♦TII	532 - 27
A709-6A,B,C,D,E,F	♦TII	532 - 28
A709-6G	♦TII	532 - 29
A709-7A,B,C,D,E,F	♦TII	532 - 30
A709-8A,B,C,D,E	♦TII	532 - 31
A710-3A,B,C,D,E,F	♦TII	535 - 37
A710-3G,H	♦TII	535 - 38
A710-4A,B,C,D,E,F	♦TII	535 - 39
A710-5A,B,C,D,E,F	♦TII	535 - 40
A710-6A,B,C,D,E	♦TII	535 - 41
A710-7A,B,C,D,E	♦TII	535 - 42
A710-8A,B,C,D	TII TIIB	535 - 43
A711-3A,B,C,D,E	♦TII	542 - 79
A711-4A,B,C,D	♦TII	542 - 80
A711-5A,B,C,D	♦TII	542 - 81
A711-6A,B,C	♦TII	542 - 82
A711-7A,B,C	♦TII	542 - 83
A711-8A,B	♦TII	542 - 84
A712-3A,B,C,D	♦TII	547 - 29
A712-4A,B,C	♦TII	547 - 30
A712-5A,B,C	♦TII	547 - 31
A712-6A,B	♦TII	547 - 32
A712-7A,B	♦TII	547 - 33
A712-8A	♦TII	547 - 34
A713-3A,B,C,D	♦TII	551 - 75
A713-4A,B,C	♦TII	551 - 76
A713-5A,B,C	♦TII	551 - 77
A713-6A,B	♦TII	551 - 78
A713-7A,B	♦TII	551 - 79
A713-8A	♦TII	551 - 80
A800	SCN	360 - 10
A900,1,2,3	♦TII TIIB	527 - 45
A905,6,7,8	♦TII	527 - 46
A1000	SCN	370 - 54
A01001	♦ECC	500 - 81
A01002	♦ECC	500 - 82
A01003	♦ECC	503 - 78
A01004	♦ECC	503 - 79
A01011	♦ECC	500 - 83
A01012	♦ECC	500 - 84
A01013	♦ECC	503 - 80
A01014	♦ECC	503 - 81
A01021	♦ECC	501 - 12
A01022	♦ECC	504 - 9
A01023	♦ECC	506 - 16
A01024	♦ECC	507 - 37
A01025	♦ECC	508 - 30
A01026	♦ECC	508 - 77
A01041	♦ECC	501 - 13
A01042	♦ECC	504 - 10
A01043	♦ECC	506 - 17
A01044	♦ECC	507 - 38
A01045	♦ECC	508 - 31
A01046	♦ECC	508 - 78
A01061	♦ECC	501 - 20
A01062	♦ECC	504 - 17
A01063	♦ECC	506 - 22
A01064	♦ECC	507 - 43
A01065	♦ECC	508 - 36
A01066	♦ECC	508 - 83
A01081	♦ECC	501 - 21
A01082	♦ECC	504 - 18
A01083	♦ECC	506 - 23
A01084	♦ECC	507 - 44
A01085	♦ECC	508 - 37
A01086	♦ECC	508 - 84
A01101	♦ECC	501 - 45
A01102	♦ECC	504 - 42
A01103	♦ECC	506 - 45
A01104	♦ECC	506 - 46
A01105	♦ECC	508 - 44
A01106	♦ECC	508 - 91

TYPE No.	MFRS	Pg&Line
A01121	♦ECC	501 - 46
A01122	♦ECC	504 - 43
A01123	♦ECC	506 - 47
A01124	♦ECC	507 - 53
A01125	♦ECC	508 - 45
A01126	♦ECC	508 - 92
A01141	♦ECC	501 - 47
A01142	♦ECC	504 - 44
A01143	♦ECC	506 - 48
A01144	♦ECC	507 - 54
A01145	♦ECC	508 - 46
A01146	♦ECC	508 - 93
A01161	♦ECC	501 - 48
A01162	♦ECC	504 - 45
A01163	♦ECC	506 - 49
A01164	♦ECC	507 - 55
A01165	♦ECC	508 - 47
A01166	♦ECC	508 - 94
A01181	♦ECC	501 - 83
A01182	♦ECC	504 - 80
A01183	♦ECC	506 - 79
A01184	♦ECC	507 - 72
A01185	♦ECC	508 - 60
A01186	♦ECC	508-107
A01201	♦ECC	501 - 84
A01202	♦ECC	504 - 81
A01203	♦ECC	506 - 80
A01204	♦ECC	507 - 73
A01205	♦ECC	508 - 61
A01206	♦ECC	508-108
A1423BC1AB1	♦GESY	313 - 57
A1423DC1AB1	♦GESY	332 - 43
A1423MC1AB1	♦GESY	349 - 63
A1423MC2AB1	♦GESY	378 - 61
A1423MC3AB1	♦GESY	388 - 28
A1423MC4AB1	♦GESY	391 - 85
A1423MC5AB1	♦GESY	394 - 62
A1423MC6AB1	♦GESY	395 -110
A1423MH2AB1	♦GESY	378 - 42
A1423MH3AB1	♦GESY	388 - 17
A1423MH4AB1	♦GESY	391 - 83
A1423MH5AB1	♦GESY	394 - 53
A1423MH6AB1	♦GESY	395 -108
A1423MH7AB1	♦GESY	397 - 79
A1423MH8AB1	♦GESY	398 - 66
A1423MH9AB1	♦GESY	400 - 32
A1423MH10AB1	♦GESY	401 - 40
A1423MH11AB1	♦GESY	401 -107
A1423MH12AB1	♦GESY	402 - 83
A1423PBC1AB1	♦GESY	378 - 43
A1423PBC2AB1	♦GESY	391 - 81
A1423PBC3AB1	♦GESY	395 -106
A1423PBC4AB1	♦GESY	398 - 64
A1423PBC5AB1	♦GESY	401 - 34
A1423PBC6AB1	♦GESY	402 - 79
A1423PBH2AB1	♦GESY	391 - 79
A1423PBH3AB1	♦GESY	395 -104
A1423PBH4AB1	♦GESY	398 - 61
A1423PBH5AB1	♦GESY	401 - 24
A1423PBH6AB1	♦GESY	402 - 78
A1423PBH7AB1	♦GESY	404 - 20
A1423PBH8AB1	♦GESY	405 - 20
A1423PBH9AB1	♦GESY	405 - 90
A1423PBH10AB1		407 - 26
	♦GESY	
A1423PC4AC1	♦GESY	394 - 35
A1423PD4AC1	♦GESY	397 - 17
A1423PE4AC1	♦GESY	399 - 77
A1423PM4AC1	♦GESY	401 - 30
A1425MH2AB1	♦GESY	378 - 49
A1425MH3AB1	♦GESY	388 - 16
A1425MH4AB1	♦GESY	391 - 82
A1425MH6AB1	♦GESY	395 -107
A1425MH8AB1	♦GESY	398 - 65
A1425MH10AB1	♦GESY	401 - 35
A1425MH12AB1	♦GESY	402 - 81
A1425MH14AB1	♦GESY	404 - 21
A1425MH16AB1	♦GESY	405 - 21
A1425MH18AB1	♦GESY	405 - 99
A1425MH20AB1	♦GESY	407 - 33
A1425PBH2AB1	♦GESY	391 - 80
A1425PBH3AB1	♦GESY	395 -105
A1425PBH4AB1	♦GESY	398 - 60
A1425PBH5AB1	♦GESY	401 - 17
A1425PBH6AB1	♦GESY	402 - 77
A1425PBH7AB1	♦GESY	404 - 19
A1425PBH8AB1	♦GESY	405 - 19
A1425PBH9AB1	♦GESY	405 - 91
A1425PBH10AB1		407 - 27
	♦GESY	
A03001	♦ECC	500 - 49
A03002	♦ECC	500 - 50
A03003	♦ECC	503 - 46
A03004	♦ECC	503 - 47
A03021	♦ECC	500 - 51
A03022	♦ECC	500 - 52
A03023	♦ECC	503 - 48
A03024	♦ECC	503 - 49
A05001A	KMC	567 - 57
A05001B	KMC	567 - 58
A05001C	KMC	567 - 59
A05001D	KMC	567 - 60
A05005A	KMC	571 - 12
A05005B	KMC	571 - 13
A05005C	KMC	571 - 14
A05005D	KMC	571 - 15
A05010A	KMC	571 - 82
A05010B	KMC	571 - 83
A05010C	KMC	571 - 84
A05010D	KMC	571 - 85
A05020A	KMC	572 - 47
A05020B	KMC	572 - 48
A05020C	KMC	572 - 49
A05020D	KMC	572 - 50

TYPE No.	MFRS	Pg&Line
A05050A	KMC	573 - 9
A05050B	KMC	573 - 10
A05050C	KMC	573 - 11
A05050D	KMC	573 - 12
A08010A	KMC	571 - 79
A08010D	KMC	571 - 80
A10003A	KMC	570 - 38
A10003D	KMC	570 - 39
A10005A	KMC	571 - 7
A10005D	KMC	571 - 8
A10020A	KMC	572 - 42
A10020D	KMC	572 - 43
A10075A	KMC	571 - 64
A10075D	KMC	571 - 65
A12010A	KMC	571 - 70
A12010D	KMC	571 - 71
A15003A	KMC	570 - 35
A15003D	KMC	570 - 36
A15005A	KMC	571 - 4
A15005D	KMC	571 - 5
A15075A	KMC	571 - 62
A15075D	KMC	571 - 63
AA1△	UNI	498 - 83
AA2△	UNI	498 - 84
AA3△	UNI	498 - 85
AA50	SCN	294 - 13
AA100△	UNI	421 - 67
AA100⊘	SCN	300 -101
AA101	UNI	423 - 7
AA102	UNI	432 - 12
AA103	UNI	442 - 16
AA104	UNI	448 - 82
AA107	♦UNI	421 - 68
AA108	♦UNI	423 - 8
AA109	♦UNI	432 - 13
AA110	♦UNI	442 - 17
AA111⊘	UNI	448 - 83
AA112	♦TFKG	246 - 72
AA112P	♦TFKG	246 - 73
AA113	ESMF	250 -102
MISI	SHWG	
	♦TFKG	
AA113P	♦TFKG	251 - 19
AA114	♦UNI	421 - 69
AA115	♦UNI	423 - 9
AA116△	SHWG	246 -106
AA116⊘	UNI	432 - 14
AA117△	SHWG	253 - 29
AA117⊘	UNI	442 - 18
AA118△	SHWG	253 - 39
	♦TFKG	
AA118⊘	UNI	448 - 84
AA118P	♦TFKG	253 - 46
AA119	APX	249 - 59
ESMF	MINA	
MISI	♦MULB	
♦PHIC	PHIN	
RADF	SHWG	
♦TFKG	♦VALG	
AA119P	♦TFKG	249 - 60
AA120	AEIL	246 - 6
AA121	ATEI	247 - 55
AA123	ATEI	246 - 93
AA129	MULB	165 - 1
AA137	♦TFKG	248 - 10
AA138	♦TFKG	246 - 74
AA139	♦TFKG	246 -108
AA143	ESMF	248 - 5
♦INTG	MISI	
AA144	INTG	253 - 85
AA200	SCN	311 - 90
AA300	SCN	321 - 88
AA400	SCN	330 - 72
AA500	SCN	340 - 63
AA600	SCN	347 - 99
AA800	SCN	360 - 81
AA1000	SCN	371 - 9
AAY11	♦MULB	276 - 85
PHIC	PHIN	
AAY12	♦MULB	254 - 26
AAY14	SHWG	254 - 17
AAY15	SHWG	248 - 48
AAY21	PHIC	265 - 12
PHIN	RADF	
	♦VALG	
AAY22	SHWG	247 - 11
AAY27	SHWG	266 - 89
AAY28	SHWG	278 - 70
AAY30	♦MULB	249 -106
	PHIC	
AAY32	♦MULB	267 - 82
	PHIC	
AAY33	♦MULB	264 - 83
AAY34	♦MULB	516 - 52
♦RADF	♦VALG	
AAY39	♦MULB	512 - 80
♦RADF	♦VALG	
AAY39A	♦MULB	512 - 81
♦RADF	♦VALG	
AAY40	♦MULB	512 - 82
	♦RADF	
AAY43	SHWG	598 - 39
AAY46	♦TFKG	251 - 12
AAY50	♦MULB	512 - 83
	♦VALG	
AAY51	♦MULB	515 - 40
♦RADF	♦VALG	
AAY52	♦MULB	515 - 41
♦RADF	♦VALG	
AAY53	SHWG	248 - 79
AAY54	SHWG	248 - 80
AAY55	SHWG	248 - 81
AAY56	♦MULB	510 - 31
	♦VALG	

TYPE No.	MFRS	Pg&Line
AAZ12	MULB	267 - 90
PHIN	VALG	
AAZ13	APX	263 - 86
♦MULB	PHIC	
PHIN	VALG	
AAZ15	APX	276 - 8
♦MULB	PHIC	
PHIN	RADF	
	♦VALG	
AAZ17	APX	272 - 96
♦MULB	PHIC	
PHIN	RADF	
	♦VALG	
AAZ18	PHIC	266 - 12
PHIN	RADF	
	♦VALG	
AAZ18△	ESMF	249 - 29
	MISI	
AB50	SCN	295 - 10
AB100	SCN	302 - 31
AB200	SCN	313 - 34
AB300	SCN	322 - 94
AB400	SCN	332 - 21
AB500	SCN	341 - 55
AB600	SCN	349 - 42
AB800	SCN	361 -107
AB1000	SCN	372 - 23
ABD025A	KMC	566 - 6
ABD025B	KMC	566 - 7
ABD025C	KMC	566 - 8
ABD025D	KMC	566 - 9
ABD050A	KMC	566 - 14
ABD050B	KMC	566 - 15
ABD050C	KMC	566 - 16
ABD050D	KMC	566 - 17
ABD100A	KMC	566 - 22
ABD100B	KMC	566 - 23
ABD100C	KMC	566 - 24
ABD100D	KMC	566 - 25
ABD250A	KMC	566 - 57
ABD250B	KMC	566 - 58
ABD250C	KMC	566 - 59
ABD250D	KMC	566 - 60
AC02BT	NECJ	501 -110
AC02BTR	NECJ	502 - 1
AC02DT	NECJ	504 -105
AC02DTR	NECJ	504 -106
AC06BR	NECJ	502 - 20
AC06BSR	NECJ	502 - 21
AC06BT	NECJ	502 - 22
AC06DR	NECJ	505 - 13
AC06DSR	NECJ	505 - 14
AC06DT	NECJ	505 - 15
AC10BR	NECJ	502 - 44
AC10BSR	NECJ	502 - 45
AC10BT	NECJ	502 - 46
AC10DR	NECJ	505 - 34
AC10DSR	NECJ	505 - 35
AC10DT	NECJ	505 - 36
AC30	LTTF	248 - 29
AC50△	LTTF	250 - 30
AC50#	SCN	295 - 55
AC100	SCN	302 - 92
AC150	LTTF	255 - 98
AC200	SCN	313 -102
AC300	SCN	323 - 32
AC400	SCN	332 - 94
AC500	SCN	341 -102
AC600	SCN	350 - 1
AC800	SCN	362 - 65
AC1000	SCN	372 - 77
AD2	SAKJ	356 - 16
AD10	LTTF	246 - 37
AD29	SAKJ	367 - 11
AD30	LTTF	247 - 91
AD50	LTTF	249 - 85
AD100△	LTTF	253 - 64
AD100⊘	UNI	422 - 1
AD101	♦UNI	423 - 61
AD102	♦UNI	432 - 58
AD103	♦UNI	442 - 39
AD104	♦UNI	448 - 93
AD107	UNI	422 - 2
AD108	UNI	423 - 62
AD109	UNI	432 - 59
AD110	UNI	442 - 40
AD111	UNI	448 - 94
AD114	UNI	422 - 3
AD115	UNI	423 - 63
AD116	UNI	432 - 60
AD117	UNI	442 - 41
AD118	UNI	448 - 95
AD150	LTTF	255 - 62
AD200	LTTF	256 - 94
AD611A	♦NECJ	598 - 40
AD611B	♦NECJ	598 - 41
AD611C	♦NECJ	598 - 42
AE10	LTTF	246 - 41
AE30	LTTF	247 -110
AE50	LTTF	249 -109
AE100	LTTF	253 - 89
AE150	LTTF	255 - 75
AE200	LTTF	256 -106
AEL10	AEL	517 - 37
AEL10H	AEL	517 - 38
AEL13	AEL	518 - 20
AEL14	AEL	518 - 41
AEL16	AEL	518 - 44
AEL-A51D	AEL	510 - 24
AEY13	♦MULB	569 - 46
♦PHIC	♦RADF	
AEY15	♦MULB	569 - 40
♦PHIC	♦RADF	

TYPE No.	MFRS	Pg&Line
AEY16	♦MULB	569 - 36
♦PHIC	♦RADF	
AEY17	♦MULB	517 - 85
	♦RADF	
AEY23	♦PHIC	567 - 92
	RADF	
AEY24	♦PHIC	570 - 25
	RADF	
AEY25	♦PHIC	570 -102
	RADF	
AEY26	♦PHIC	571 - 51
	RADF	
AEY27	♦PHIC	572 - 20
	RADF	
AEY28	♦PHIC	572 - 82
	RADF	
AEY29	♦MULB	518 - 34
	RADF	
AG30	LTTF	267 - 92
AG100	LTTF	279 - 55
AG150	LTTF	281 - 36
AHY10A	♦TFKG	598 - 43
AHY10B	♦TFKG	598 - 44
AHY10C	♦TFKG	598 - 45
AHY10D	♦TFKG	598 - 46
AM1	GICC	294 - 45
AM2	GICC	293 - 16
AM3	GICC	292 -106
AM4	GICC	294 - 52
AM005	GICC	293 - 89
AM5	GICC	293 - 17
AM010	GICC	300 - 49
AM11	GICC	301 - 35
AM12	GICC	299 - 44
AM13	GICC	299 - 18
AM015	GICC	307 - 76
AM020	GICC	311 - 32
AM21	GICC	312 - 36
AM22	GICC	310 - 4
AM23	GICC	309 - 88
AM24	GICC	312 - 45
AM025	GICC	319 - 27
AM030	GICC	321 - 55
AM31	GICC	322 - 7
AM32	GICC	320 - 69
AM33	GICC	320 - 49
AM34	GICC	322 - 13
AM035	GICC	327 - 42
AM040	GICC	330 - 8
AM41	GICC	331 - 17
AM42	GICC	328 - 71
AM43	GICC	328 - 43
AM44	GICC	331 - 25
AM050	GICC	340 - 26
AM51	GICC	340 - 87
AM52	GICC	339 - 34
AM53	GICC	339 - 10
AM54	GICC	340 - 93
AM060	GICC	347 - 37
AM62	GICC	346 - 21
AM63	GICC	345 -106
AM64	GICC	348 - 46
AM300	AMD	281 - 44
AM300A	AMD	256 - 10
AM301	AMD	279 -100
AM301A	AMD	254 - 9
AM302	AMD	272 -102
AM302A	AMD	250 - 46
AM303	AMD	281 - 45
AM303A	AMD	255 - 99
AM304	AMD	279 -101
AM304A	AMD	254 - 1
AM305	AMD	272 -103
AM305A	AMD	250 - 31
AM306	AMD	281 - 46
AM306A	AMD	255 - 86
AM307	AMD	279 -102
AM307A	AMD	253 -101
AM308	AMD	272 -104
AM308A	AMD	250 - 17
AM405	GICC	293 - 8
AM410	GICC	299 - 36
AM415	GICC	307 - 64
AM420	GICC	309 -107
AM425	GICC	319 - 18
AM430	GICC	320 - 64
AM435	GICC	327 - 32
AM440	GICC	328 - 63
AM450	GICC	339 - 27
AM460	GICC	346 - 14
AM601	AMD	286 - 21
AM602	AMD	285 - 2
AM603	AMD	284 - 18
AM604	AMD	282 - 23
AM610	AMD	286 - 78
AM611	AMD	286 - 22
AM612	AMD	285 - 3
AM613	AMD	284 - 19
AM614	AMD	282 - 24
AM615	AMD	286 - 79
AM615A	AMD	286 - 80
AM616	AMD	286 - 23
AM616A	AMD	286 - 24
AM617	AMD	285 - 4
AM617A	AMD	285 - 5
AM618	AMD	284 - 20
AM618A	AMD	284 - 21
AM619	AMD	282 - 25
AM619A	AMD	282 - 26
AM620	AMD	278 - 71
AM620A	AMD	278 - 72
AM621	AMD	286 - 81
AM621A	AMD	286 - 82
AM622	AMD	286 - 25

△-Registered with JEDEC by this manufacturer

♦-Copy of mfr's data sheet may be ordered from D.A.T.A.

1. TYPE No. CROSS INDEX

IN TYPE NUMBER SEQUENCE

TYPE No.	MFRS	Pg&Line	TYPE No.	MFRS	Pg&Line	TYPE No.	MFRS	Pg&Line	TYPE No.	MFRS	Pg&Line	TYPE No.	MFRS	Pg&Line
AM622A	AMD	286- 26	AM7205A	AMD	278- 53	AV2028	ASC	212-118	AV8031	ASC	214- 77	AV51034	ASC	216- 42
AM623	AMD	285- 6	AM7206	AMD	598- 63	AV2029	ASC	212-140	AV8032	ASC	214- 83	AV51035	ASC	216- 58
AM623A	AMD	285- 7	AM7207	AMD	598- 64	AV2030	ASC	213- 83	AV8033	ASC	215-203	AV51036	ASC	217-111
AM624	AMD	284- 22	AM7208	AMD	598- 65	AV2031	ASC	214- 75	AV8034	ASC	216- 41	AV51037	ASC	217-122
AM624A	AMD	284- 23	AM7209	AMD	598- 66	AV2032	ASC	214- 81	AV8035	ASC	216- 56	AV51038	ASC	217-128
AM625	AMD	282- 27	AM7270	AMD	598- 67	AV2033	ASC	215- 50	AV8036	ASC	217- 91	AV51039	ASC	218-184
AM625A	AMD	282- 28	AM7270A	AMD	271- 97	AV2034	ASC	216- 38	AV8037	ASC	217-121	AV51040	ASC	219- 21
AM626	AMD	278- 73	AM7271	AMD	598- 68	AV2035	ASC	216- 52	AV8038	ASC	217-127	AV51041	ASC	219- 31
AM626A	AMD	278- 74	AM7272	AMD	598- 69	AV2036	ASC	216-159	AV8039	ASC	218-163	AV51042	ASC	219- 39
AM627	AMD	286- 83	AM7273	AMD	598- 70	AV2037	ASC	217-117	AV8040	ASC	219- 17	AV51043	ASC	220- 69
AM627A	AMD	286- 84	AM7274	AMD	598- 71	AV2038	ASC	217-125	AV8041	ASC	219- 30	AV51044	ASC	220- 78
AM628	AMD	286- 27	AM7275	AMD	598- 72	AV2039	ASC	218- 57	AV8042	ASC	219- 38	AV51045	ASC	220-148
AM628A	AMD	286- 28	AM7275A	AMD	271- 98	AV2040	ASC	218-195	AV8043	ASC	220- 52	AV51046	ASC	220-155
AM629	AMD	285- 8	AM7276	AMD	598- 73	AV2041	ASC	219- 29	AV8044	ASC	220- 77	AV51047	ASC	222- 22
AM629A	AMD	285- 9	AM7277	AMD	598- 74	AV2042	ASC	219- 36	AV8045	ASC	220-140	AV51048	ASC	222- 38
AM630	AMD	284- 24	AM7278	AMD	598- 75	AV2043	ASC	219-133	AV8046	ASC	220-154	AV51049	ASC	222- 44
AM630A	AMD	284- 25	AM7279	AMD	598- 76	AV2044	ASC	220- 76	AV8047	ASC	222- 1	AV51050	ASC	222-118
AM631	AMD	282- 29	AM7280	AMD	598- 77	AV2045	ASC	220- 90	AV8048	ASC	222- 37	AV51051	ASC	223-139
AM631A	AMD	282- 30	AM7280A	AMD	271- 99	AV2046	ASC	220-151	AV8049	ASC	222- 43	AV51052	ASC	223-189
AM632	AMD	278- 75	AM7281	AMD	598- 78	AV2047	ASC	221- 73	AV8050	ASC	222-110	AV51053	ASC	223-192
AM632A	AMD	278- 76	AM7282	AMD	598- 79	AV2048	ASC	222- 35	AV8051	ASC	223-122	AV51054	ASC	224- 3
AM633	AMD	278- 77	AM7283	AMD	598- 80	AV2049	ASC	222- 42	AV8052	ASC	223-185	AV51055	ASC	224- 6
AM634	AMD	272- 11	AM7284	AMD	598- 81	AV2050	ASC	222- 59	AV8053	ASC	223-191	AV51056	ASC	225- 66
AM635	AMD	278- 78	AM7285	AMD	598- 82	AV2051	ASC	223- 23	AV8054	ASC	224- 2	AV51057	ASC	225- 82
AM635A	AMD	278- 79	AM7285A	AMD	271-100	AV2052	ASC	223-154	AV8055	ASC	224- 5	AV51058	ASC	225- 90
AM636	AMD	272- 12	AM7286	AMD	598- 83	AV2053	ASC	223-190	AV8056	ASC	225- 43	AV51059	ASC	225- 96
AM636A	AMD	272- 13	AM7287	AMD	598- 84	AV2054	ASC	224- 1	AV8057	ASC	225- 81	AV51060	ASC	225-148
AM637	AMD	272- 14	AM7288	AMD	598- 85	AV2055	ASC	224- 4	AV8058	ASC	225- 89	AV51061	ASC	225-151
AM637A	AMD	272- 15	AM7289	AMD	598- 86	AV2056	ASC	224-101	AV8059	ASC	225- 95	AV51062	ASC	226-172
AM638	AMD	272- 16	APY10/I	SHWG	575- 32	AV2057	ASC	225- 79	AV8060	ASC	225-144	AV51063	ASC	226-181
AM638A	AMD	272- 17	APY10/II	SHWG	575- 33	AV2058	ASC	225- 88	AV8061	ASC	225-150	AV51064	ASC	226-187
AM639	AMD	272- 18	APY11/I	SHWG	575- 34	AV2059	ASC	225- 93	AV8062	ASC	226-155	AV51065	ASC	227- 1
AM639A	AMD	272- 19	APY11/II	SHWG	575- 35	AV2060	ASC	225-118	AV8063	ASC	226-180	AV51066	ASC	227- 5
AM701	AMD	281-107	APY12/I	SHWG	575- 36	AV2061	ASC	225-149	AV8064	ASC	226-186	AV51067	ASC	227- 13
AM701A	AMD	281- 94	APY12/II	SHWG	575- 37	AV2062	ASC	226- 54	AV8065	ASC	226-189	AV51068	ASC	228- 61
AM702	AMD	278- 43	APY12/III	SHWG	575- 38	AV2063	ASC	226-179	AV8066	ASC	227- 4	AV51069	ASC	228- 74
AM702A	AMD	278- 29	APY13/I	SHWG	575- 39	AV2064	ASC	226-184	AV8067	ASC	227- 12	AV51070	ASC	228-101
AM703	AMD	284- 5	APY13/II	SHWG	575- 40	AV2065	ASC	226-188	AV8068	ASC	228- 40	AV51071	ASC	228-108
AM703A	AMD	284- 6	APY13/III	SHWG	575- 41	AV2066	ASC	227- 3	AV8069	ASC	228- 73	AV51072	ASC	228-112
AM704	AMD	281-108	AS2X1E	GIC	598- 87	AV2067	ASC	227- 8	AV8070	ASC	228- 97	AV51073	ASC	228-115
AM704A	AMD	281- 95	AS3X2E	GIC	598- 88	AV2068	ASC	227-110	AV8071	ASC	228-107	AV51074	ASC	228-121
AM705	AMD	278- 44	AS4Δ	ALSF	336- 95	AV2069	ASC	228- 71	AV8072	ASC	228-111	AV51075	ASC	229-160
AM705A	AMD	278- 30	AS4X2E	GIC	598- 89	AV2070	ASC	228- 77	AV8073	ASC	228-114	AV51076	ASC	229-172
AM706	AMD	284- 7	AS5X3E	GIC	598- 90	AV2071	ASC	228-106	AV8074	ASC	228-120	AV51077	ASC	229-175
AM706A	AMD	283-109	AS6Δ	ALSF	353- 56	AV2072	ASC	228-109	AV8075	ASC	229-139	AV51078	ASC	229-179
AM707	AMD	281-109	AS6X3E	GIC	598- 91	AV2073	ASC	228-113	AV8076	ASC	229-171	AV51079	ASC	229-182
AM707A	AMD	281- 96	AS6X4E	GIC	598- 92	AV2074	ASC	228-119	AV8077	ASC	229-174	AV51080	ASC	230- 12
AM708	AMD	278- 45	AS7X5E	GIC	598- 93	AV2075	ASC	229- 26	AV8078	ASC	229-178	AV51081	ASC	230- 15
AM708A	AMD	278- 31	AS8	ALSF	365- 65	AV2076	ASC	229-169	AV8079	ASC	229-181	AV51082	ASC	231- 48
AM709	AMD	284- 8	AS8X4E	GIC	598- 94	AV2077	ASC	229-173	AV8080	ASC	230- 8	AV51083	ASC	231- 59
AM709A	AMD	283-110	AS8X6E	GIC	598- 95	AV2078	ASC	229-177	AV8081	ASC	230- 14	AV51084	ASC	231- 65
AM710	AMD	281-110	AS10	ALSF	375- 5	AV2079	ASC	229-180	AV8082	ASC	231- 29	AV51085	ASC	231- 68
AM710A	AMD	281- 97	AS12Δ	ALSF	380- 15	AV2080	ASC	229-186	AV8083	ASC	231- 58	AV51086	ASC	231- 73
AM711	AMD	278- 46	AS15Δ	ALSF	385- 24	AV2081	ASC	230- 13	AV8084	ASC	231- 64	AV51087	ASC	231-103
AM711A	AMD	278- 32	ATS10	ALSF	427- 47	AV2082	ASC	230-106	AV8085	ASC	231- 67	AV51088	ASC	231-109
AM712	AMD	284- 9	ATS20	ALSF	436- 87	AV2083	ASC	231- 56	AV8086	ASC	231- 72	AV51089	ASC	231-114
AM712A	AMD	284- 1	ATS30	ALSF	445- 47	AV2084	ASC	231- 62	AV8087	ASC	231-102	AV51090	ASC	231-144
AM713	AMD	282- 1	ATS40	ALSF	453- 36	AV2085	ASC	231- 66	AV8088	ASC	231-108	AV51091	ASC	232-155
AM713A	AMD	281- 98	ATS50	ALSF	460- 19	AV2086	ASC	231- 70	AV8089	ASC	231-113	AV51092	ASC	232-162
AM714	AMD	278- 47	ATS60	ALSF	466- 97	AV2087	ASC	231- 94	AV8090	ASC	231-139	AV51093	ASC	232-165
AM714A	AMD	278- 33	ATY450	ATEI	598- 96	AV2088	ASC	231-106	AV8091	ASC	232-139	AV51094	ASC	232-169
AM715	AMD	284- 10	AV3B28	ITTE	405-106	AV2089	ASC	231-112	AV8092	ASC	232-161	AV51095	ASC	232-172
AM715A	AMD	284- 2	AV4	ASC	188- 98	AV2090	ASC	231-117	AV8093	ASC	232-164	AV51096	ASC	232-179
AM716	AMD	282- 2	AV4B32	ITTE	406- 45	AV2091	ASC	232- 44	AV8094	ASC	232-168	AV51097	ASC	232-182
AM716A	AMD	281- 99	AV5	ASC	192-167	AV2092	ASC	232-159	AV8095	ASC	232-171	AV51098	ASC	232-186
AM717	AMD	278- 48	AV6	ASC	196-165	AV2093	ASC	232-163	AV8096	ASC	232-178	AV51099	ASC	232-188
AM717A	AMD	278- 34	AV7	ASC	202- 91	AV2094	ASC	232-167	AV8097	ASC	232-181	AV51100	ASC	234- 54
AM718	AMD	284- 11	AV8	ASC	208- 13	AV2095	ASC	232-170	AV8098	ASC	232-185	AV51105	ASC	234-136
AM718A	AMD	284- 3	AV9	ASC	212- 83	AV2096	ASC	232-176	AV8099	ASC	232-187	AV51110	ASC	235-164
AM719	AMD	282- 3	AV10	ASC	215- 49	AV2097	ASC	232-180	AV8100	ASC	234- 32	AV51115	ASC	235-169
AM719A	AMD	281-100	AV11	ASC	218-194	AV2098	ASC	232-184	AV8105	ASC	234-131	AV51120	ASC	237- 31
AM720	AMD	278- 49	AV12	ASC	222- 34	AV2099	ASC	233- 86	AV8110	ASC	235-151	AV51125	ASC	237- 38
AM720A	AMD	278- 35	AV13	ASC	225- 78	AV2100	ASC	233- 87	AV8115	ASC	235-168	AV51130	ASC	238- 51
AM721	AMD	284- 12	AV14	ASC	228- 70	AV2105	ASC	234- 98	AV8120	ASC	237- 15	AV51140	ASC	239- 1
AM721A	AMD	284- 4	AV15	ASC	231- 55	AV2110	ASC	235- 52	AV8125	ASC	237- 37	AV51145	ASC	239- 10
AM722	AMD	282- 4	AV16	ASC	233- 85	AV2115	ASC	235-167	AV8130	ASC	238- 42	AV51150	ASC	240- 48
AM722A	AMD	281-101	AV17	ASC	237- 32	AV2120	ASC	236- 76	AV8135	ASC	238- 56	AV51155	ASC	240- 51
AM723	AMD	278- 50	AV18	ASC	239- 90	AV2125	ASC	237- 36	AV8140	ASC	238-161	AV51160	ASC	241- 43
AM723A	AMD	278- 36	AV19	ASC	242-170	AV2130	ASC	237-115	AV8145	ASC	239- 9	AV51165	ASC	241- 51
AM724	AMD	278- 51	AV102	♦EGG	575- 42	AV2135	ASC	238- 54	AV8150	ASC	240- 30	AV51170	ASC	241- 82
AM724A	AMD	278- 37	AV104	ASC	189- 65	AV2140	ASC	238-106	AV8155	ASC	240- 50	AV51175	ASC	241-145
AM1010	AMD	288- 38	AV105	ASC	193-156	AV2145	ASC	239- 5	AV8160	ASC	241- 34	AV51180	ASC	242-169
AM1010A	AMD	288- 19	AV106	ASC	196-166	AV2150	ASC	239- 91	AV8165	ASC	241- 45	AV51185	ASC	242-174
AM1020	AMD	289- 11	AV107	ASC	203- 51	AV2155	ASC	240- 49	AV8170	ASC	241- 81	AV51190	ASC	243- 23
AM1020A	AMD	288-104	AV108	ASC	208- 14	AV2160	ASC	240-117	AV8175	ASC	241-141	AV51195	ASC	243- 26
AM1030	AMD	289- 47	AV109	ASC	212- 84	AV2165	ASC	241- 44	AV8180	ASC	242-152	AV51200	ASC	244- 26
AM1030A	AMD	289- 27	AV110	ASC	215-202	AV2170	ASC	241- 60	AV8185	ASC	242-173	AV/5R4GY	ITTE	393- 22
AM1040	AMD	289- 67	AV111	ASC	219- 16	AV2175	ASC	241-117	AV8190	ASC	243- 22	AY102	ATEI	598- 97
AM1040A	AMD	289- 51	AV112	ASC	222- 36	AV2180	ASC	242- 57	AV8195	ASC	243- 25	AY103K	ATEI	598- 98
AM1050	AMD	289- 98	AV113	ASC	225- 80	AV2185	ASC	242-172	AV8200	ASC	244- 14	AY104K	ATEI	598- 99
AM1050A	AMD	289- 74	AV114	ASC	228- 72	AV2190	ASC	243- 1	AV51010	ASC	189- 94	AY105K	ATEI	598-100
AM1060	AMD	290- 14	AV115	ASC	231- 57	AV2195	ASC	243- 24	AV51011	ASC	191- 62	AY106	ATEI	598-101
AM1060A	AMD	289-109	AV116	ASC	234- 31	AV2200	ASC	243- 97	AV51012	ASC	193-187	AYY10-120	♦MULB	298- 89
AM1070	AMD	290- 38	AV117	ASC	237- 33	AV8010	ASC	189- 66	AV51013	ASC	195-196	♦PHIC	RADF	
AM1070A	AMD	290- 20	AV118	ASC	240- 29	AV8011	ASC	191- 42	AV51014	ASC	196-157		♦VALG	
AM6170	AMD	598- 47	AV119	ASC	242-171	AV8012	ASC	193-157	AV51015	ASC	198-190	AZ3 3	LTTF	166-153
AM6170A	AMD	285- 10	AV2010	ASC	188- 99	AV8013	ASC	195-175	AV51016	ASC	200-136	AZ3 6	LTTF	167-109
AM6171	AMD	598- 48	AV2011	ASC	190- 93	AV8014	ASC	196-148	AV51017	ASC	201- 74	AZ3 9	LTTF	168- 60
AM6172	AMD	598- 49	AV2012	ASC	192-168	AV8015	ASC	198-159	AV51018	ASC	203- 81	AZ4 3	LTTF	169- 55
AM6173	AMD	598- 50	AV2013	ASC	195- 31	AV8016	ASC	200-116	AV51019	ASC	204- 34	AZ4 7	LTTF	170- 43
AM6174	AMD	598- 51	AV2014	ASC	196- 80	AV8017	ASC	201- 69	AV51020	ASC	206- 7	AZ5 1	LTTF	171- 90
AM6175	AMD	598- 52	AV2015	ASC	197-183	AV8018	ASC	203- 52	AV51021	ASC	206- 25	AZ5 6	LTTF	172-100
AM6175A	AMD	285- 11	AV2016	ASC	199-168	AV8019	ASC	204- 28	AV51022	ASC	208- 3	AZ6 2	LTTF	174- 68
AM6176	AMD	598- 53	AV2017	ASC	201- 31	AV8020	ASC	205-184	AV51023	ASC	208- 26	AZ6 8	LTTF	176-195
AM6177	AMD	598- 54	AV2018	ASC	202- 92	AV8021	ASC	206- 24	AV51024	ASC	209-164	AZ7 5	LTTF	179- 34
AM6178	AMD	598- 55	AV2019	ASC	203-169	AV8022	ASC	207-174	AV51025	ASC	210- 78	AZ8 2	LTTF	181- 83
AM6179	AMD	598- 56	AV2020	ASC	205- 39	AV8023	ASC	208- 25	AV51026	ASC	210- 95	AZ9 1	LTTF	184-214
AM7200	AMD	598- 57	AV2021	ASC	206- 17	AV8024	ASC	209-144	AV51027	ASC	212- 71	AZ10Δ	LTTF	187- 74
AM7200A	AMD	278- 52	AV2022	ASC	207- 18	AV8025	ASC	210- 73	AV51028	ASC	212-129	AZ11Δ	LTTF	189-127
AM7201	AMD	598- 58	AV2023	ASC	208- 18	AV8026	ASC	210- 94	AV51029	ASC	212-143	AZ12Δ	LTTF	191-158
AM7202	AMD	598- 59	AV2024	ASC	209- 3	AV8027	ASC	212- 44	AV51030	ASC	214- 65	AZ13Δ	LTTF	194- 62
AM7203	AMD	598- 60	AV2025	ASC	210- 37	AV8028	ASC	212-128	AV51031	ASC	214- 78	AZ15Δ	LTTF	196-182
AM7204	AMD	598- 61	AV2026	ASC	210- 89	AV8029	ASC	212-142	AV51032	ASC	214- 84	AZ18Δ	LTTF	201- 85
AM7205	AMD	598- 62	AV2027	ASC	211- 81	AV8030	ASC	214- 43	AV51033	ASC	216- 26	AZ22	LTTF	206- 34

Δ-Registered with JEDEC by this manufacturer

♦-Copy of mfr's data sheet may be ordered from D.A.T.A.

1. TYPE No. CROSS INDEX

IN TYPE NUMBER SEQUENCE

TYPE No.	MFRS	Pg&Line
AZ27	LTTF	210-104
B1A1	EDL	292- 96
B1A5	EDL	292- 97
B1A9	EDL	292- 98
B1B1	EDL	299- 8
B1B5	EDL	299- 9
B1B9	EDL	299- 10
B1C1	EDL	309- 78
B1C5	EDL	309- 79
B1C9	EDL	309- 80
B1D1	EDL	320- 39
B1D5	EDL	320- 40
B1D9	EDL	320- 41
B1E1	EDL	328- 32
B1E5	EDL	328- 33
B1E9	EDL	328- 34
B1F1	EDL	339- 3
B1F5	EDL	339- 4
B1F9	EDL	339- 5
B1G1	EDL	345- 97
B1G5	EDL	345- 98
B1G9	EDL	345- 99
B1H1	EDL	355- 9
B1H5	EDL	355- 10
B1H9	EDL	355- 11
B1K1	EDL	359- 14
B1K5	EDL	359- 15
B1K9	EDL	359- 16
B1M1	EDL	369- 60
B1M5	EDL	369- 61
B1M9	EDL	369- 62
B1N1	EDL	377- 62
B1N5	EDL	377- 63
B1N9	EDL	377- 64
B2A1	EDL	293- 45
B2A5	EDL	293- 46
B2A9	EDL	293- 47
B2B1	EDL	299- 93
B2B5	EDL	299- 94
B2B9	EDL	299- 95
B2C1	EDL	310- 62
B2C5	EDL	310- 63
B2C9	EDL	310- 64
B2D1	EDL	320-105
B2D5	EDL	320-106
B2D9	EDL	320-107
B2E1	EDL	329- 28
B2E5	EDL	329- 29
B2E9	EDL	329- 30
B2F1	EDL	339- 74
B2F5	EDL	339- 75
B2F9	EDL	339- 76
B2G1	EDL	346- 70
B2G5	EDL	346- 71
B2G9	EDL	346- 72
B2H1	EDL	355- 35
B2H5	EDL	355- 36
B2H9	EDL	355- 37
B2K1	EDL	359- 80
B2K5	EDL	359- 81
B2K9	EDL	359- 82
B2M1	EDL	370- 21
B2M5	EDL	370- 22
B2M9	EDL	370- 23
B2N1	EDL	377- 90
B2N5	EDL	377- 91
B2N9	EDL	377- 92
B3A1	EDL	293- 59
B3A5	EDL	293- 60
B3A9	EDL	293- 61
B3B1	EDL	300- 4
B3B5	EDL	300- 5
B3B9	EDL	300- 6
B3C1	EDL	310- 87
B3C5	EDL	310- 88
B3C9	EDL	310- 89
B3D1	EDL	321- 12
B3D5	EDL	321- 13
B3D9	EDL	321- 14
B3E1	EDL	329- 57
B3E5	EDL	329- 58
B3E9	EDL	329- 59
B3F1	EDL	339- 97
B3F5	EDL	339- 98
B3F9	EDL	339- 99
B3G1	EDL	346- 92
B3G5	EDL	346- 93
B3G9	EDL	346- 94
B3H1	EDL	355- 46
B3H5	EDL	355- 47
B3H9	EDL	355- 48
B3K1	EDL	359-102
B3K5	EDL	359-103
B3K9	EDL	359-104
B3M1	EDL	370- 42
B3M5	EDL	370- 43
B3M9	EDL	370- 44
B3N1	EDL	377-103
B3N5	EDL	377-104
B3N9	EDL	377-105
B4A1	EDL	293- 97
B4A5	EDL	293- 98
B4A9	EDL	293- 99
B4B1	EDL	300- 63
B4B5	EDL	300- 64
B4B9	EDL	300- 65
B4C1	EDL	311- 47
B4C5	EDL	311- 48
B4C9	EDL	311- 49
B4D1	EDL	321- 68
B4D5	EDL	321- 69
B4D9	EDL	321- 70
B4E1	EDL	330- 27
B4E5	EDL	330- 28

TYPE No.	MFRS	Pg&Line
B4E9	EDL	330- 29
B4F1	EDL	340- 38
B4F5	EDL	340- 39
B4F9	EDL	340- 40
B4G1	EDL	347- 55
B4G5	EDL	347- 56
B4G9	EDL	347- 57
B4H1	EDL	355- 61
B4H5	EDL	355- 62
B4H9	EDL	355- 63
B4K1	EDL	360- 37
B4K5	EDL	360- 38
B4K9	EDL	360- 39
B4M1	EDL	370- 80
B4M5	EDL	370- 81
B4M9	EDL	370- 82
B4N1	EDL	378- 11
B4N5	EDL	378- 12
B4N9	EDL	378- 13
B4Y1-560M	RADF	345- 52
B4Y2-140M	RADF	307- 39
B4Y2-280M	RADF	320- 14
B4Y2-560M	RADF	345- 54
B4Y5-140M	RADF	307- 42
B4Y5-280M	RADF	320- 17
B4Y5-420M	RADF	338- 34
B4Y5-560M	RADF	345- 57
B4Y10-140M	RADF	307- 43
B4Y10-280M	RADF	320- 18
B4Y20-140M	RADF	307- 44
B4Y20-210M	RADF	318- 89
B4Y20-280M	RADF	320- 19
B4Y20-350M	RADF	327- 62
B4Y20-420M	RADF	338- 35
B5A1	EDL	293-110
B5A5	EDL	294- 1
B5A9	EDL	294- 2
B5B1	EDL	300- 75
B5B5	EDL	300- 76
B5B9	EDL	300- 77
B5C1	EDL	311- 60
B5C5	EDL	311- 61
B5C9	EDL	311- 62
B5D1	EDL	321- 79
B5D5	EDL	321- 80
B5D9	EDL	321- 81
B5E1	EDL	330- 42
B5E5	EDL	330- 43
B5E9	EDL	330- 44
B5F1	EDL	340- 51
B5F5	EDL	340- 52
B5F9	EDL	340- 53
B5G1	EDL	347- 72
B5G5	EDL	347- 73
B5G9	EDL	347- 74
B5H1	EDL	355- 72
B5H5	EDL	355- 73
B5H9	EDL	355- 74
B5K1	EDL	360- 56
B5K5	EDL	360- 57
B5K9	EDL	360- 58
B5M1	EDL	370- 98
B5M5	EDL	370- 99
B5M9	EDL	370-100
B5N1	EDL	378- 24
B5N5	EDL	378- 25
B5N9	EDL	378- 26
B6A1	EDL	294- 63
B6A5	EDL	294- 64
B6A9	EDL	294- 65
B6B1	EDL	301- 57
B6B5	EDL	301- 58
B6B9	EDL	301- 59
B6C1	EDL	312- 57
B6C5	EDL	312- 58
B6C9	EDL	312- 59
B6D1	EDL	322- 24
B6D5	EDL	322- 25
B6D9	EDL	322- 26
B6E1	EDL	331- 39
B6E5	EDL	331- 40
B6E9	EDL	331- 41
B6F1	EDL	340-104
B6F5	EDL	340-105
B6F9	EDL	340-106
B6G1	EDL	348- 62
B6G5	EDL	348- 63
B6G9	EDL	348- 64
B6H1	EDL	355-100
B6H5	EDL	355-101
B6H9	EDL	355-102
B6K1	EDL	361- 34
B6K5	EDL	361- 35
B6K9	EDL	361- 36
B6M1	EDL	371- 68
B6M5	EDL	371- 69
B6M9	EDL	371- 70
B6N1	EDL	378- 53
B6N5	EDL	378- 54
B6N9	EDL	378- 55
B7A1	EDL	294- 81
B7A5	EDL	294- 82
B7A9	EDL	294- 83
B7B1	EDL	301- 82
B7B5	EDL	301- 83
B7B9	EDL	301- 84
B7C1	EDL	312- 79
B7C5	EDL	312- 80
B7C9	EDL	312- 81
B7D1	EDL	322- 42
B7D5	EDL	322- 43
B7D9	EDL	322- 44
B7E1	EDL	331- 65
B7E5	EDL	331- 66

TYPE No.	MFRS	Pg&Line
B7E9	EDL	331- 67
B7F1	EDL	341- 11
B7F5	EDL	341- 12
B7F9	EDL	341- 13
B7G1	EDL	348- 90
B7G5	EDL	348- 91
B7G9	EDL	348- 92
B7H1	EDL	356- 2
B7H5	EDL	356- 3
B7H9	EDL	356- 4
B7K1	EDL	361- 58
B7K5	EDL	361- 59
B7K9	EDL	361- 60
B7M1	EDL	371- 84
B7M5	EDL	371- 85
B7M9	EDL	371- 86
B7N1	EDL	378- 69
B7N5	EDL	378- 70
B7N9	EDL	378- 71
B40C600	INTG	309- 47
B40C3200-2200	INTG	309- 48
B40C5000-3000	INTG	309- 49
B80C600	INTG	327- 5
B80C3200-2200	INTG	327- 8
B80C5000-3000	INTG	327- 9
B150	UNI	416- 16
B151	UNI	421- 56
B152	UNI	422-108
B172-5	EDL	295- 26
B172-10	EDL	302- 52
B172-20	EDL	313- 58
B172-30	EDL	322-107
B172-40	EDL	332- 44
B172-50	EDL	341- 70
B172-60	EDL	349- 64
B172-70	EDL	356- 31
B172-80	EDL	362- 15
B172-90	EDL	367- 27
B172-100	EDL	372- 39
B172-110	EDL	376- 48
B172-120	EDL	378- 90
B223-10	♦EDL	370-101
B223-20	♦EDL	390- 14
B223-30	♦EDL	394- 50
B223-40	♦EDL	397- 25
B223-50	♦EDL	399- 73
B223-60	♦EDL	401- 9
B01021	♦ECC	433- 57
B01022	♦ECC	433- 58
B01023	♦ECC	433- 59
B01024	♦ECC	449- 63
B01025	♦ECC	449- 64
B01026	♦ECC	449- 65
B01027	♦ECC	463- 11
B01028	♦ECC	463- 12
B01029	♦ECC	463- 13
B01030	♦ECC	474- 9
B01031	♦ECC	474- 10
B01032	♦ECC	474- 11
B01051	♦ECC	434- 46
B01052	♦ECC	434- 47
B01053	♦ECC	450- 42
B01054	♦ECC	450- 43
B01055	♦ECC	463- 78
B01056	♦ECC	463- 79
B01057	♦ECC	474- 31
B01058	♦ECC	474- 32
B01071	♦ECC	435- 2
B01072	♦ECC	435- 3
B01073	♦ECC	450-108
B01074	♦ECC	450-109
B01075	♦ECC	464- 19
B01076	♦ECC	464- 20
B01077	♦ECC	474- 63
B01078	♦ECC	474- 64
B01091	♦ECC	435- 26
B01092	♦ECC	435- 27
B01093	♦ECC	451- 25
B01094	♦ECC	451- 26
B01095	♦ECC	464- 38
B01096	♦ECC	464- 39
B01097	♦ECC	474- 69
B01098	♦ECC	474- 70
B01407	ECC	417- 2
B01408	ECC	418- 39
B01409	ECC	424- 43
B01410	ECC	433- 44
B01411	ECC	449- 51
B01412	ECC	463- 2
B01413	ECC	474- 1
B01414	ECC	417- 10
B01415	ECC	418- 56
B01416	ECC	424- 66
B01417	ECC	433- 77
B01418	ECC	449- 80
B01419	ECC	463- 29
B01420	ECC	474- 15
B01421	ECC	417- 35
B01422	ECC	419- 2
B01423	ECC	425- 22
B01424	ECC	434- 38
B01425	ECC	450- 34
B01426	ECC	463- 70
B01427	ECC	474- 27
B01428	ECC	417- 44
B01429	ECC	419- 22
B01430	ECC	425- 52
B01431	ECC	434- 70
B01432	ECC	450- 67
B01433	ECC	463-100
B01434	ECC	474- 38
B01435	ECC	417- 52
B01436	ECC	419- 73
B01437	ECC	426- 26

TYPE No.	MFRS	Pg&Line
B01438	ECC	435- 58
B01439	ECC	451- 55
B01440	ECC	464- 68
B01441	ECC	474- 81
B03001	♦ECC	433- 16
B03002	♦ECC	433- 17
B03003	♦ECC	433- 18
B03004	♦ECC	449- 28
B03005	♦ECC	449- 29
B03006	♦ECC	449- 30
B03007	♦ECC	462-102
B03008	♦ECC	462-103
B03009	♦ECC	462-104
B03010	♦ECC	473-101
B03011	♦ECC	473-102
B03012	♦ECC	473-103
B03400	ECC	416- 84
B03401	ECC	418- 10
B03402	ECC	423- 98
B03403	ECC	432- 91
B03404	ECC	449- 3
B03405	ECC	462- 94
B03406	ECC	473- 95
B04001	♦ECC	433- 19
B04002	♦ECC	433- 20
B04003	♦ECC	433- 21
B04004	♦ECC	449- 31
B04005	♦ECC	449- 32
B04006	♦ECC	449- 33
B04007	♦ECC	462-105
B04008	♦ECC	462-106
B04009	♦ECC	462-107
B04010	♦ECC	473-104
B04011	♦ECC	473-105
B04012	♦ECC	473-106
B04021	♦ECC	433- 60
B04022	♦ECC	433- 61
B04023	♦ECC	433- 62
B04024	♦ECC	449- 66
B04025	♦ECC	449- 67
B04026	♦ECC	449- 68
B04027	♦ECC	463- 14
B04028	♦ECC	463- 15
B04029	♦ECC	463- 16
B04030	♦ECC	474- 12
B04031	♦ECC	474- 13
B04032	♦ECC	474- 14
B04300	ECC	416- 85
B04301	ECC	418- 11
B04302	ECC	423- 99
B04303	ECC	432- 92
B04304	ECC	449- 4
B04305	ECC	462- 95
B04306	ECC	473- 96
B04307	ECC	417- 3
B04308	ECC	418- 40
B04309	ECC	424- 44
B04310	ECC	433- 45
B04311	ECC	449- 52
B04312	ECC	463- 3
B04313	ECC	474- 2
B05001	♦ECC	434- 48
B05002	♦ECC	434- 49
B05003	♦ECC	450- 44
B05004	♦ECC	450- 45
B05005	♦ECC	463- 80
B05006	♦ECC	463- 81
B05007	♦ECC	474- 33
B05008	♦ECC	474- 34
B05021	♦ECC	435- 4
B05022	♦ECC	435- 5
B05023	♦ECC	450-110
B05024	♦ECC	451- 1
B05025	♦ECC	464- 21
B05026	♦ECC	464- 22
B05027	♦ECC	474- 65
B05028	♦ECC	474- 66
B05041	♦ECC	435- 28
B05042	♦ECC	435- 29
B05043	♦ECC	451- 27
B05044	♦ECC	451- 28
B05045	♦ECC	464- 40
B05046	♦ECC	464- 41
B05047	♦ECC	474- 71
B05048	♦ECC	474- 72
B05414	ECC	417- 11
B05415	ECC	418- 57
B05416	ECC	424- 67
B05417	ECC	433- 78
B05418	ECC	449- 81
B05419	ECC	463- 30
B05420	ECC	474- 16
B05421	ECC	417- 36
B05422	ECC	419- 3
B05423	ECC	425- 23
B05424	ECC	434- 39
B05425	ECC	450- 35
B05426	ECC	463- 71
B05427	ECC	474- 28
B05428	ECC	417- 45
B05429	ECC	419- 23
B05430	ECC	425- 53
B05431	ECC	434- 71
B05432	ECC	450- 68
B05433	ECC	463-101
B05434	ECC	474- 39
B05435	ECC	417- 53
B05436	ECC	419- 74
B05437	ECC	426- 27
B05438	ECC	435- 59
B05439	ECC	451- 56
B05440	ECC	464- 69
B05441	ECC	474- 82

TYPE No.	MFRS	Pg&Line
B006001D,E,F,G,H	AEL	520- 73
B006004D,E,F,G,H	AEL	526- 16
B006010D,E,F,G	AEL	529- 33
B015001D,E,F,G,H	AEL	520- 74
B15001	ECC	417- 60
B15002	ECC	419- 92
B15003	ECC	426- 74
B015004D,E,F,G,H	AEL	526- 17
B015010D,E,F,G	AEL	529- 34
B015020C,D,E	AEL	532- 32
B15021	ECC	417- 70
B15022	ECC	420- 24
B15023	ECC	427- 31
B15024	ECC	436- 73
B15025	ECC	452- 67
B15026	ECC	465- 79
B15027	ECC	475- 41
B16001	ECC	417- 61
B16002	ECC	419- 93
B16003	ECC	426- 75
B16004	ECC	436- 1
B16005	ECC	451-104
B16006	ECC	465- 9
B16007	ECC	474-105
B16021	ECC	417- 71
B16022	ECC	420- 25
B16023	ECC	427- 32
B16024	ECC	436- 74
B16025	ECC	452- 68
B16026	ECC	465- 80
B16027	ECC	475- 42
B17001	ECC	417- 62
B17002	ECC	419- 94
B17003	ECC	426- 76
B17004	ECC	436- 2
B17005	ECC	451-105
B17006	ECC	465- 10
B17007	ECC	474-106
B17021	ECC	417- 72
B17022	ECC	420- 26
B17023	ECC	427- 33
B17024	ECC	436- 75
B17025	ECC	452- 69
B17026	ECC	465- 81
B17027	ECC	475- 43
B18001	ECC	417- 63
B18002	ECC	419- 95
B18003	ECC	426- 77
B18004	ECC	436- 3
B18005	ECC	451-106
B18006	ECC	465- 11
B18007	ECC	474-107
B18021	ECC	417- 73
B18022	ECC	420- 27
B18023	ECC	427- 34
B18024	ECC	436- 76
B18025	ECC	452- 70
B18026	ECC	465- 82
B18027	ECC	475- 44
B18031	ECC	417- 12
B18032	ECC	418- 58
B18033	ECC	424- 68
B18034	ECC	433- 79
B18035	ECC	449- 82
B18036	ECC	463- 31
B18037	ECC	474- 17
B18041	ECC	417- 37
B18042	ECC	419- 4
B18043	ECC	425- 24
B18044	ECC	434- 40
B18045	ECC	450- 36
B18046	ECC	463- 72
B18047	ECC	474- 29
B18051	ECC	417- 43
B18052	ECC	419- 24
B18053	ECC	425- 54
B18054	ECC	434- 72
B18055	ECC	450- 69
B18056	ECC	463-102
B18057	ECC	474- 40
B18061	ECC	417- 54
B18062	ECC	419- 75
B18063	ECC	426- 28
B18064	ECC	435- 60
B18065	ECC	451- 57
B18066	ECC	464- 70
B18067	ECC	474- 83
B19001	ECC	417- 64
B19002	ECC	419- 96
B19003	ECC	426- 78
B19004	ECC	436- 4
B19005	ECC	451-107
B19006	ECC	465- 12
B19007	ECC	474-108
B19021	ECC	417- 74
B19022	ECC	420- 28
B19023	ECC	427- 35
B19024	ECC	436- 77
B19025	ECC	452- 71
B19026	ECC	465- 83
B19027	ECC	475- 45
B19031	ECC	417- 13
B19032	ECC	418- 59
B19033	ECC	424- 69

Δ-Registered with JEDEC by this manufacturer

♦-Copy of mfr's data sheet may be ordered from D.A.T.A.

1. TYPE No. CROSS INDEX

IN TYPE NUMBER SEQUENCE

TYPE No.	MFRS	Pg&Line
B19034	ECC	433- 80
B19035	ECC	449- 83
B19036	ECC	463- 32
B19037	ECC	474- 18
B19041	ECC	417- 38
B19042	ECC	419- 5
B19043	ECC	425- 25
B19044	ECC	434- 41
B19045	ECC	450- 37
B19046	ECC	463- 73
B19047	ECC	474- 30
B19051	ECC	417- 46
B19052	ECC	419- 25
B19053	ECC	425- 55
B19054	ECC	434- 73
B19055	ECC	450- 70
B19056	ECC	463-103
B19057	ECC	474- 41
B19061	ECC	417- 55
B19062	ECC	419- 76
B19063	ECC	426- 29
B19064	ECC	435- 61
B19065	ECC	451- 58
B19066	ECC	464- 71
B19067	ECC	474- 84
B024004D,E,F,G,H		526- 18
	AEL	
B024010C,D,E,F		529- 35
	AEL	
B024020C,D,E	AEL	532- 33
B030004C,E,F,G		526- 19
	AEL	
B030010C,D,E,F		529- 36
	AEL	
B030020B,C,D,E		532- 34
	AEL	
B045004C,D,E,F		526- 20
	AEL	
B045010B,C,D,E,F		529- 37
	AEL	
B045020B,C,D	AEL	532- 35
B060010A,B,C,D,E		529- 38
	AEL	
B060020A,B,C,D		532- 36
	AEL	
B090010A,B,C,D		529- 39
	AEL	
B090020A,B,C	AEL	532- 37
BA100	MINA	250- 92
PHIC	PHIN	
RADF	TIID	
TIIF	♦VALG	
BA102	♦MULB	548- 48
PHIC	PHIN	
RADF	♦VALG	
BA103	SHWG	246- 19
TIID	TIIF	
BA104	SHWG	254- 5
TIID	TIIF	
BA105	SHWG	258- 78
TIID	TIIF	
BA108	SHWG	250- 42
TIID	TIIF	
BA109	VALG	553- 18
BA110	INTG	539- 95
	ITTB	
BA111	INTG	559- 6
	ITTB	
BA112	INTG	561- 85
	ITTB	
BA114	APX	246- 34
MINA	MULB	
PHIC	PHIN	
RADF	TIID	
	♦TIIF	
BA115	MULB	281- 51
	PHIC	
BA116	AEIL	247- 13
TIID	TIIF	
BA117	SHWG	246- 7
TIID	TIIF	
BA119	SHWG	555- 69
TIID	TIIF	
BA120	SHWG	539- 96
TIID	TIIF	
BA122	MINA	253- 65
BA125	♦TFKG	556- 65
BA127	SHWG	298- 35
TIID	TIIF	
BA128	SGSI	252- 45
TIIB	TIID	
	TIIF	
BA129	SGSI	257- 1
TIID	TIIF	
BA130	SGSI	248- 1
TIIB	TIID	
	TIIF	
BA133	SHWG	369- 27
BA136	SHWG	250- 32
TIID	TIIF	
	♦VALG	
BA137	SHWG	278- 54
TIID	TIIF	
BA138	SHWG	534- 32
BA139	SHWG	531-103
BA140	SHWG	531-106
BA141	INTG	543- 19
	ITTB	
BA142	INTG	543- 20
BA145	MINA	258- 76
♦MULB	♦PHIC	
RADF	SHWG	
TIID	TIIF	
	♦VALG	

TYPE No.	MFRS	Pg&Line
BA147	TIID	246- 83
	TIIF	
BA147/25	♦TFKG	247- 73
TIID	TIIF	
BA147/50	♦TFKG	250- 18
TIID	TIIF	
BA147/100	♦TFKG	253-102
TIID	TIIF	
BA147/150	♦TFKG	255- 87
TIID	TIIF	
BA147/220	♦TFKG	257- 93
TIID	TIIF	
BA147/300	♦TFKG	258- 71
TIID	TIIF	
BA148	APX	258- 68
MINA	♦MULB	
♦PHIC	RADF	
TIID	TIIF	
	♦VALG	
BA149	♦TFKG	534-108
BA150△	♦TFKG	559- 7
	♦VALG	
BA150⊠	UNI	416- 26
BA151△	AEIL	246- 5
TIID	TIIF	
BA151⊠	UNI	421- 70
BA152	UNI	423- 10
BA152A	♦ESMF	598-102
	MISI	
BA153	TIID	248-105
	TIIF	
BA157	INTG	285- 82
BA158	INTG	287- 11
BA159	INTG	288- 39
BA163	INTG	562- 85
BA164	SGSI	247- 14
TIID	TIIF	
BA166	TIID	247- 15
	TIIF	
BA167	TIID	266-101
	TIIF	
BA168	AEIL	265- 9
TIID	TIIF	
BA170	INTG	247- 27
TIID	TIIF	
BA173	♦TFKG	284- 56
BA174	♦TFKG	266- 93
BA175	♦TFKG	272- 81
BA176	♦TFKG	598-103
BA177	♦TFKG	250- 33
BA178	♦TFKG	248- 71
BA179	AEIL	249- 83
TIID	TIIF	
BA180	TIID	246- 39
	♦TIIF	
BA181	TIID	247- 7
	♦TIIF	
BA182	APX	248- 72
♦MULB	♦PHIC	
♦RADF	TFKG	
	♦VALG	
BA184	TIID	259- 35
	♦TIIF	
BA185	TIID	259- 88
	♦TIIF	
BA186	TIID	259- 99
	♦TIIF	
BA187	TIID	250- 50
	TIIF	
BA188	TIID	254- 19
	TIIF	
BA189	TIID	256- 31
	TIIF	
BA190	TIID	257- 35
	TIIF	
BA191	♦TFKG	592- 92
BA192	TIID	250- 55
	♦TIIF	292- 89
BA193	TIID	254- 28
	♦TIIF	299- 1
BA194	TIID	256- 40
	♦TIIF	307- 51
BA195	TIID	282- 5
	TIIF	
BA196	TIID	281- 4
	♦TIIF	
BA197	TIID	282- 6
	♦TIIF	
BA198	TIID	283- 93
	♦TIIF	
BA209	TIID	277-107
	TIIF	
BA210	TIID	277-108
	TIIF	
BA211	TIID	277-109
	TIIF	
BA212	TIID	277-110
	TIIF	
BA213	TIID	278- 1
	TIIF	
BA214	TIID	278- 2
	TIIF	
BA215	TIID	251- 44
	TIIF	
BA216	♦APX	246- 43
♦PHIC	♦VALG	
BA217	♦APX	248- 21
♦PHIC	♦VALG	
BA218	♦APX	250- 25
♦PHIC	♦VALG	
BA219	♦APX	253-105
♦PHIC	♦VALG	
BA243	INTG	582- 91
BA244	INTG	582- 92

TYPE No.	MFRS	Pg&Line
BAV10	APX	273- 51
♦MULB	♦PHIC	
♦RADF	TIID	
TIIF	♦VALG	
BAV12	TIID	276- 78
	TIIF	
BAV13	TIID	271- 56
	TIIF	
BAV17	INTG	247- 77
TIID	TIIF	
BAV18	INTG	251- 27
TIID	TIIF	
BAV19	INTG	254- 93
TIID	TIIF	
BAV20	INTG	256- 86
TIID	TIIF	
BAV21	INTG	258- 17
TIID	TIIF	
BAV24	TIID	271- 35
	TIIF	
BAV205	BRA	332- 74
BAV206	BRA	341- 86
BAV207	BRA	349- 89
BAV208	BRA	356- 43
BAV209	BRA	362- 43
BAV215	BRA	332- 75
BAV216	BRA	341- 87
BAV217	BRA	349- 90
BAV218	BRA	356- 44
BAV219	BRA	362- 44
BAV225	BRA	332- 76
BAV226	BRA	341- 88
BAV227	BRA	349- 91
BAV228	BRA	356- 45
BAV229	BRA	362- 45
BAV305	BRA	332- 77
BAV306	BRA	341- 89
BAV307	BRA	349- 92
BAV308	BRA	356- 46
BAV309	BRA	362- 46
BAV315	BRA	332- 78
BAV316	BRA	341- 90
BAV317	BRA	349- 93
BAV318	BRA	356- 47
BAV319	BRA	362- 47
BAV325	BRA	332- 79
BAV326	BRA	341- 91
BAV327	BRA	349- 94
BAV328	BRA	356- 48
BAV329	BRA	362- 48
BAV405	BRA	333- 94
BAV406	BRA	342- 59
BAV407	BRA	350-110
BAV408	BRA	356- 94
BAV409	BRA	363- 47
BAV415	BRA	333- 95
BAV416	BRA	342- 60
BAV417	BRA	351- 1
BAV418	BRA	356- 95
BAV419	BRA	363- 48
BAV425	BRA	333- 96
BAV426	BRA	342- 61
BAV427	BRA	351- 2
BAV428	BRA	356- 96
BAV429	BRA	363- 49
BAV505	BRA	334- 73
BAV506	BRA	343- 1
BAV507	BRA	351- 81
BAV508	BRA	357- 15
BAV509	BRA	364- 11
BAV515	BRA	334- 74
BAV516	BRA	343- 2
BAV517	BRA	351- 82
BAV518	BRA	357- 16
BAV519	BRA	364- 12
BAV525	BRA	334- 75
BAV526	BRA	343- 3
BAV527	BRA	351- 83
BAV528	BRA	357- 17
BAV529	BRA	364- 13
BAV705	BRA	333- 97
BAV706	BRA	342- 62
BAV707	BRA	351- 3
BAV708	BRA	356- 97
BAV709	BRA	363- 50
BAV715	BRA	333- 98
BAV716	BRA	342- 63
BAV717	BRA	351- 4
BAV718	BRA	356- 98
BAV719	BRA	363- 51
BAV725	BRA	333- 99
BAV726	BRA	342- 64
BAV727	BRA	351- 5
BAV728	BRA	356- 99
BAV729	BRA	363- 52
BAV805	BRA	334- 76
BAV806	BRA	343- 4
BAV807	BRA	351- 84
BAV808	BRA	357- 18
BAV809	BRA	364- 14
BAV815	BRA	334- 77
BAV816	BRA	343- 5
BAV817	BRA	351- 85
BAV818	BRA	357- 19
BAV819	BRA	364- 15
BAV825	BRA	334- 78
BAV826	BRA	343- 6
BAV827	BRA	351- 86
BAV828	BRA	357- 20
BAV829	BRA	364- 16
BAW10TF20	TIID	250- 51
	TIIF	
BAW11TF21	TIID	254- 20
	TIIF	

TYPE No.	MFRS	Pg&Line
BAW12TF22	TIID	256- 32
	TIIF	
BAW13TF23	TIID	257- 36
	TIIF	
BAW14	TIID	258- 88
	TIIF	
BAW14TF24	TIID	258- 89
	TIIF	
BAW16	TIID	256- 33
	♦TIIF	
BAW17	TIID	257- 37
	♦TIIF	
BAW18	TIID	256- 34
	♦TIIF	
BAW21	INTG	593- 92
BAW24	TFKG	269- 34
TIID	TIIF	
BAW25	TFKG	269- 35
TIID	TIIF	
BAW26	TFKG	273- 52
TIID	TIIF	
BAW27	TFKG	273- 53
BAW32A	ESMF	256-107
	MISI	
BAW32B	ESMF	255- 76
	MISI	
BAW32C	ESMF	253- 90
	MISI	
BAW32D	ESMF	249-110
	MISI	
BAW32E	ESMF	246- 42
	MISI	
BAW33	TIID	274- 43
	♦TIIF	
BAW43	TIID	280- 88
	♦TIIF	
BAW45	SGSI	265- 87
TIID	TIIF	
BAW46	SGSI	275- 75
TIID	TIIF	
BAW47	SGSI	277-105
BAW48	SGSI	271- 92
TIID	TIIF	
BAW49	SGSI	278- 40
TIID	TIIF	
BAW50	SGSI	282- 12
TIID	TIIF	
BAW51	SGSI	252-109
TIID	TIIF	
BAW52	SGSI	257- 43
TIID	TIIF	
BAW53	SGSI	267- 72
TIID	TIIF	
BAW54	SGSI	271- 24
TIID	TIIF	
BAW55	SGSI	275- 76
TIID	TIIF	
BAW56	APX	271- 25
RADF	♦VALG	
BAW58	SGSI	278- 55
TIID	TIIF	
BAW59	SGSI	269- 36
TIID	TIIF	
BAW62	APX	275- 38
♦MULB	♦PHIC	
RADF	♦VALG	
BAW63	♦FERB	273- 34
TIID	TIIF	
BAW63A	♦FERB	267- 48
TIID	TIIF	
BAW63B	♦FERB	265- 10
TIID	TIIF	
BAW69	♦TFKG	592- 93
BAW70	♦TFKG	592- 94
BAW77	TIID	254- 96
	TIIF	
BAW84	TIID	284- 59
	TIIF	
BAW85	TIID	285- 87
	TIIF	
BAW95D	♦VALG	512- 84
BAW95E	VALG	512- 85
BAW95F	VALG	512- 86
BAW99	♦PHIC	266- 76
BAX12△	APX	281- 57
	♦PHIC	
BAX12⊠	♦MULB	276- 81
♦RADF	♦VALG	
BAX13	APX	270- 74
♦MULB	♦PHIC	
RADF	TIID	
TIIF	♦VALG	
BAX13A	♦MULB	270- 75
BAX15	APX	256- 87
♦PHIC	TIID	
TIIF	♦VALG	
BAX16	APX	281- 12
♦MULB	♦PHIC	
RADF	TIID	
TIIF	♦VALG	
BAX16A	♦MULB	281- 25
BAX17	APX	282- 40
♦MULB	♦PHIC	
RADF	TIID	
TIIF	♦VALG	
BAX17A	♦MULB	282- 41
BAX18	♦APX	252- 59
♦PHIC	♦VALG	
BAX20	♦TFKG	247- 78
TIID	TIIF	
BAX21	♦TFKG	250- 34
TIID	TIIF	
BAX22	TIID	254- 2
	TIIF	

TYPE No.	MFRS	Pg&Line
BAX25	TFKG	267- 16
BAX26	TFKG	267- 17
BAX27	TFKG	267- 22
BAX28	SHWG	266- 77
TIID	TIIF	
BAX30	SHWG	266- 78
TIID	TIIF	
BAX33	SGSI	598-104
TIID	TIIF	
BAX34	SGSI	598-105
TIID	TIIF	
BAX35	SGSI	598-106
TIID	TIIF	
BAX36	SGSI	598-107
TIID	TIIF	
BAX37	SGSI	598-108
TIID	TIIF	
BAX38	SGSI	598-109
TIID	TIIF	
BAX39	SGSI	598-110
TIID	TIIF	
BAX40	SGSI	599- 1
TIID	TIIF	
BAX41	SGSI	599- 2
TIID	TIIF	
BAX42	SGSI	599- 3
TIID	TIIF	
BAX43	SGSI	599- 4
TIID	TIIF	
BAX44	SGSI	599- 5
TIID	TIIF	
BAX74	SHWG	266- 88
TIID	TIIF	
BAX78	♦MULB	273- 19
♦PHIC	TIID	
	TIIF	
BAX79	TIID	252- 52
	TIIF	
BAX80	TIID	270- 76
	TIIF	
BAX81	TIID	276- 74
	TIIF	
BAX82	TIID	271- 26
	TIIF	
BAX83	TIID	278- 10
	TIIF	
BAX84	ESMF	271- 27
MISI	TIID	
	TIIF	
BAX85	TIID	271- 79
	TIIF	
BAX86A/TF53	TIID	271- 36
	TIIF	
BAX86B/TF54	TIID	271- 57
	TIIF	
BAX87	TIID	269- 37
	TIIF	
BAX88TF11	TIID	265-104
	TIIF	
BAX89A/TF34	TIID	265- 91
	TIIF	
BAX89B/TF35	TIID	269-103
	TIIF	
BAX89C-TF37	TIID	269-102
	TIIF	
BAX90A/TF827	TIID	265- 98
	TIIF	
BAX90B/TF828	TIID	271-101
	TIIF	
BAX90C/TF829	TIID	265- 68
	TIIF	
BAX91A/TF100	TIID	270- 7
	TIIF	
BAX91B/TF101	TIID	270- 8
	TIIF	
BAX91C/TF102	TIID	275- 39
	TIIF	
BAX92TF7	TIID	271- 58
	TIIF	
BAX93TF71	TIID	270- 28
	TIIF	
BAX94	TIID	271-102
	TIIF	
BAX95TF600	TIID	275- 40
	TIIF	
BAX96A	TIID	277- 56
	TIIF	
BAX96C	TIID	277- 57
	TIIF	
BAY17	INTG	246- 85
SOIF	TIID	
	TIIF	
BAY18	INTG	251- 28
SOIF	TIID	
	TIIF	
BAY19	INTG	254- 94
SOIF	TIID	
	TIIF	
BAY20	INTG	256- 88
SOIF	TIID	
	TIIF	
BAY21	INTG	259- 32
SOIF	TIID	
	TIIF	
BAY23	INTG	260- 70
BAY24	INTG	260-108
	SOIF	
BAY25	INTG	261- 20
	SOIF	
BAY26	INTG	261- 44
	SOIF	
BAY31	TIIB	265- 13
TIID	TIIF	

△-Registered with JEDEC by this manufacturer

♦-Copy of mfr's data sheet may be ordered from D.A.T.A.

1. TYPE No. CROSS INDEX

IN TYPE NUMBER SEQUENCE

TYPE No.	MFRS	Pg&Line
BAY32	PHIN	256- 48
TIID	TIIF	
BAY33	TIID	256- 8
	TIIF	
BAY35	INTG	561- 86
BAY36	TIIB	267- 67
TIID	TIIF	
BAY38	♦MULB	270- 77
♦PHIC	PHIN	
TIID	TIIF	
BAY39	♦MULB	276- 6
PHIC	PHIN	
TIID	TIIF	
BAY41	SHWG	269- 48
TIID	TIIF	
BAY42	SHWG	273- 61
TIID	TIIF	
BAY43	SHWG	276- 36
TIID	TIIF	
BAY44	♦ESMF	250- 43
MISI	SHWG	
TIID	TIIF	
BAY45	♦ESMF	256- 5
MISI	SHWG	
TIID	TIIF	
BAY46	SHWG	258- 79
TIID	TIIF	
BAY52	TIID	265- 18
	TIIF	
BAY60	SHWG	266- 39
TIID	TIIF	
BAY63	SHWG	270- 78
TIID	TIIF	
BAY64	PHIN	247- 25
TIID	TIIF	
BAY66	APX	551- 68
♦MULB	PHIC	
PHIN	RADF	
	♦VALG	
BAY68	♦TFKG	268- 65
TIID	TIIF	
BAY69	♦TFKG	273- 58
TIID	TIIF	
BAY71	ESMF	270- 79
MISI	SGSI	
TIIB	TIID	
	TIIF	
BAY72	SGSI	280- 71
TIIB	TIID	
	TIIF	
BAY73	SGSI	255- 14
TIID	TIIF	
BAY74	SGSI	270- 80
TIID	TIIF	
BAY77	TIID	267- 2
	TIIF	
BAY78	♦TFKG	250- 19
TIID	TIIF	
BAY80	TIID	280- 37
	♦TIIF	
BAY86	TFKG	248- 67
TIID	TIIF	
BAY87	TFKG	254- 95
TIID	TIIF	
BAY88	TFKG	259- 33
TIID	TIIF	
BAY89	TFKG	260- 3
TIID	TIIF	
BAY90	TFKG	260- 71
BAY91	TFKG	261- 21
BAY92	TFKG	287- 31
BAY93	♦TFKG	265- 64
TIID	TIIF	
BAY94	TIID	266- 40
	TIIF	
BAY95	TIID	270- 9
	TIIF	
BAY96	APX	552-103
♦MULB	PHIC	
RADF	♦VALG	
BAY97	SHWG	266- 41
TIID	TIIF	
BAY98	SHWG	281- 5
TIID	TIIF	
BAY99	SHWG	269- 58
TIID	TIIF	
BB100	♦ESMF	542- 65
	MISI	
BB100GBE	ESMF	534-106
	MISI	
BB100GVE	ESMF	533- 97
	MISI	
BB102/15	♦TFKG	544- 59
BB102/16	♦TFKG	547- 26
BB102/17	♦TFKG	547- 28
BB102/18	♦TFKG	547- 70
BB102/19	♦TFKG	548- 28
BB102/20	♦TFKG	548- 32
BB103	ESMF	553- 17
MISI	SHWG	
BB104	SHWG	555- 88
TFKG	♦VALG	
BB105	♦MULB	542- 68
BB105A	APX	531-104
♦PHIC	♦RADF	
SHWG	♦TFKG	
	♦VALG	
BB105B	APX	531- 54
♦PHIC	♦RADF	
SHWG	♦TFKG	
	♦VALG	
BB105G	APX	531- 74
♦MULB	♦PHIC	
cont next col		

TYPE No.	MFRS	Pg&Line
BB105G		
(cont)	♦RADF	
SHWG	♦TFKG	
	♦VALG	
BB106	APX	548- 33
♦PHIC	♦VALG	
BB110	♦VALG	543- 7
BB117	APX	542- 69
BB121	INTG	542- 70
BB122	INTG	544- 12
BB141	INTG	543- 21
BB142	INTG	542- 71
BBY17	♦FERB	536- 42
BBY18	♦FERB	540- 8
BBY19	♦FERB	544- 80
BBY20	♦FERB	549- 49
BBY21	♦FERB	553- 44
BBY22	♦FERB	556- 94
BCD08	♦EDI	403- 63
BCD10	♦EDI	405- 72
BCD15	♦EDI	408- 34
BCD20	♦EDI	410- 11
BCD25	♦EDI	411- 22
BCD30	♦EDI	412- 23
BCD35	♦EDI	412- 53
BCD40	♦EDI	412- 80
BCD45	♦EDI	412-102
BCD50	♦EDI	413- 5
BCR10A2	MITJ	500- 16
BCR10A4	MITJ	502- 47
BCR10A6	MITJ	503- 12
BCR10A8	MITJ	505- 37
BCR10B2	MITJ	500- 17
BCR10B4	MITJ	502- 48
BCR10B6	MITJ	503- 13
BCR10B8	MITJ	505- 38
BCR10C2	MITJ	500- 18
BCR10C4	MITJ	502- 49
BCR10C6	MITJ	503- 14
BCR10C8	MITJ	505- 39
BCR25A4L	MITJ	502- 76
BCR25A4R	MITJ	502- 77
BCR25A6L	MITJ	503- 27
BCR25A6R	MITJ	503- 28
BCR25A8L	MITJ	505- 70
BCR25A8R	MITJ	505- 71
BCR25A10L	MITJ	507- 13
BCR25A10R	MITJ	507- 14
BCR70A4	MITJ	502- 94
BCR70A8	MITJ	505- 88
BCR70A12	MITJ	508- 18
BCR70A16	MITJ	509- 8
BCR70A20	MITJ	509- 17
BCR70A24	MITJ	509- 26
BCR150A4	MITJ	502- 96
BCR150A8	MITJ	505- 89
BCR150A12	MITJ	508- 19
BCR150A16	MITJ	509- 9
BCR150A20	MITJ	509- 18
BCR150A24	MITJ	509- 27
BCR300A4	MITJ	502- 97
BCR300A8	MITJ	505- 91
BCR300A12	MITJ	508- 21
BCR300A16	MITJ	509- 11
BCR300A20	MITJ	509- 20
BCR300A24	MITJ	509- 29
BD1⊠	TEC	581- 36
BD1A	TEC	581- 37
BD1B	TEC	581- 38
BD5△	TEC	581- 39
BD100	UNI	417- 6
BD101	UNI	422- 45
BD102	UNI	424- 50
BD402	GESY	581- 40
BD403	GESY	581- 41
BD404	GESY	581- 42
BD405	GESY	581- 43
BD406	GESY	581- 44
BD3600	♦RAYN	599- 6
BDW26	TEC	498- 77
BDW32	TEC	498- 80
BDW38	TEC	498- 82
BFW50	♦SES	295- 27
BFW100	♦SES	302- 53
BFW200	♦SES	313- 59
BFW300	♦SES	322-108
BFW400	♦SES	332- 45
BFW500	♦SES	341- 71
BFW600	♦SES	349- 65
BFW800	♦SES	362- 16
BFW1000	♦SES	372- 40
BH4R1	GELC	302- 59
BH4R2	GELC	313- 65
BH4R3	GELC	323- 2
BH4R4	GELC	332- 51
BH4R5	GELC	341- 75
BH4R6	GELC	349- 71
BH200	EDI	389- 88
BH300	EDI	394- 28
BH400	EDI	397- 12
BH500	EDI	399- 69
BIP7407F	BUR	496- 2
BIP7407G	BUR	496- 1
BLVA156	♦TRW	172-115
BLVA159	♦TRW	173-180
BLVA162	♦TRW	174-106
BLVA165	♦TRW	176-120
BLVA168	♦TRW	176-213
BLVA171	♦TRW	179- 6
BLVA174	♦TRW	179- 20
BLVA177	♦TRW	181- 39
BLVA180	♦TRW	181- 51
BLVA183	♦TRW	183- 77
BLVA186	♦TRW	184- 11

TYPE No.	MFRS	Pg&Line
BLVA189	♦TRW	184- 84
BLVA192	♦TRW	186-180
BLVA195	♦TRW	187- 38
BLVA198	♦TRW	187- 53
BLVA456	♦TRW	172-116
BLVA459	♦TRW	173-181
BLVA462	♦TRW	174-107
BLVA465	♦TRW	176-121
BLVA468	♦TRW	176-214
BLVA471	♦TRW	179- 7
BLVA474	♦TRW	179- 21
BLVA477	♦TRW	181- 40
BLVA480	♦TRW	181- 52
BLVA483	♦TRW	183- 78
BLVA486	♦TRW	184- 12
BLVA489	♦TRW	184- 85
BLVA492	♦TRW	186-181
BLVA495	♦TRW	187- 39
BLVA498	♦TRW	187- 54
BLVA1101	♦TRW	189-103
BLVA1104	♦TRW	189-105
BLVA4101	♦TRW	189-104
BLVA4104	♦TRW	189-106
BP100	SHWG	577- 9
BPX31	♦RADF	579-101
BPX32	♦RADF	579-102
BPX33	♦RADF	579-103
BPX34	♦TFKG	597- 92
BPX40	♦PHIC	575- 43
BPX41	♦PHIC	575- 44
BPX42	♦PHIC	575- 45
BPX68	♦PHIC	575- 46
BPX69	♦PHIC	575- 47
BPY10	♦MULB	575- 48
	PHIC	
BPY11	SHWG	577- 10
BPY13	♦MULB	575- 49
PHIC	♦RADF	
BPY13A	♦MULB	575- 50
	♦RADF	
BPY15	PHIC	579-104
BPY20	MULB	599- 7
BPY21	MULB	599- 8
BPY22	MULB	599- 9
BPY43	SHWG	577- 11
BPY44	SHWG	577- 12
BPY45	SHWG	579-105
BPY46	SHWG	577- 13
BPY47	SHWG	577- 14
BPY48	SHWG	577- 15
BPY63	SHWG	577- 16
BPY64	SHWG	577- 17
BPY68	APX	575- 51
♦MULB	♦PHIC	
	♦RADF	
BPY69	APX	575- 52
♦MULB	♦PHIC	
	♦RADF	
BPY70	♦TFKG	579-106
BPY71	♦TFKG	579-107
BPY72	♦TFKG	579-108
BPY77	APX	575- 53
♦PHIC	♦RADF	
BPY78	♦TFKG	597- 93
BPY79	♦TFKG	597- 94
BR21	PWC	299- 53
BR22	PWC	310- 15
BR24	PWC	328- 82
BR26	PWC	346- 26
BR28	PWC	359- 42
BR41	PWC	300- 7
BR42	PWC	310- 90
BR44	PWC	329- 60
BR46	PWC	346- 95
BR48	PWC	359-105
BR51	PWC	300- 78
BR52	PWC	311- 63
BR54	PWC	330- 45
BR56	PWC	347- 75
BR58	PWC	360- 59
BR71A	PWC	302- 32
BR72A	PWC	313- 35
BR74A	PWC	332- 22
BR76A	PWC	349- 43
BR78A	PWC	361-108
BR81A	PWC	302- 93
BR81B	PWC	300- 79
BR81D	PWC	301- 85
BR82A	PWC	313-103
BR82B	PWC	311- 64
BR82D	PWC	312- 82
BR84A	PWC	332- 95
BR84B	PWC	330- 46
BR84D	PWC	331- 68
BR86A	PWC	350- 2
BR86B	PWC	347- 76
BR86D	PWC	348- 93
BR88A	PWC	362- 66
BR88B	PWC	360- 60
BR88D	PWC	361- 61
BR91A	PWC	303- 67
BR92A	PWC	314- 82
BR94A	PWC	333- 73
BR96A	PWC	350- 88
BR98A	PWC	363- 23
BR100	♦MULB	498- 78
♦PHIC	♦RADF	
	♦VALG	
BR101A	PWC	303-108
BR102A	PWC	315- 19
BR104A	PWC	334- 19
BR106A	PWC	351- 32
BR108A	PWC	363- 76
BR205	PWC	293- 22

TYPE No.	MFRS	Pg&Line
BR405	PWC	293- 62
BR410	PWC	370- 45
BR505	PWC	294- 3
BR510	PWC	370-102
BR705A	PWC	295- 11
BR710A	PWC	372- 24
BR805A	PWC	295- 56
BR805D	PWC	294- 84
BR810A	PWC	371- 87
BR810B	PWC	370-103
BR810D	PWC	371- 88
BR820A	PWC	390- 37
BR830A	PWC	394- 72
BR840A	PWC	397- 49
BR850A	PWC	400- 3
BR860A	PWC	401- 60
BR870A	PWC	402- 63
BR880A	PWC	404- 4
BR890A	PWC	404- 96
BR905A	PWC	296- 3
BR1005A	PWC	296- 37
BR8100A	PWC	406- 34
BRY20	SHWG	498- 7
BRY39	♦MULB	498- 4
♦PHIC	♦RADF	
BRY42	ITTB	440- 86
BRY43	ITTB	449- 34
BRY44	ITTB	457- 30
BRY46	INTG	498- 5
BRY49	TFKG	498- 6
BRY50	TFKG	498- 16
BRY51	TFKG	498- 21
BSA01	MSDB	267-107
BSA02	MSDB	267- 97
BSA11	MSDB	267-105
BSA12	MSDB	273- 87
BSA21	MSDB	246- 11
BSA31	MSDB	270- 81
BSC01	MSDB	531-107
BSC02	MSDB	529- 5
BSC03	MSDB	527- 14
BSC04	MSDB	528-107
BSC05	MSDB	527- 15
BSC11	MSDB	531- 73
BSC12	MSDB	528-101
BSC13	MSDB	525- 94
BSC14	MSDB	523- 17
BSC21	MSDB	539- 77
BSC22	MSDB	534- 29
BSC23	MSDB	531- 75
BSC24	MSDB	528- 50
BSC25	MSDB	525- 95
BSC26	MSDB	523- 18
BSC51	MSDB	544- 40
BSC52	MSDB	538- 56
BSC551	MSDB	530- 64
BSC552	MSDB	530- 65
BSC553	MSDB	530- 66
BSC554	MSDB	530- 67
BSC555	MSDB	530- 68
BSC556	MSDB	531- 90
BSC557	MSDB	533- 57
BSM01	MSDB	510- 97
BSM02	MSDB	510- 98
BSM11	MSDB	512- 87
BSM12	MSDB	512- 88
BSM13	MSDB	512- 89
BSM21	MSDB	515- 65
BSM31	MSDB	516- 37
BSM41	MSDB	516- 53
BSM42	MSDB	516- 54
BSM51	MSDB	512- 90
BSM61	MSDB	512- 91
BStB0106	SHWG	424- 11
BStB0113	SHWG	433- 4
BStB0126	SHWG	449- 22
BStB0140	SHWG	462- 90
BStB0146	SHWG	470- 76
BStB0206	SHWG	424- 99
BStB0213	SHWG	434- 3
BStB0226	SHWG	450- 2
BStB0240	SHWG	463- 19
BStB0246	SHWG	470- 88
BStC0106	SHWG	425- 6
BStC0113	SHWG	434- 21
BStC0126	SHWG	450- 18
BStC0133	SHWG	457- 72
BStC0140	SHWG	463- 57
BStC0146	SHWG	470- 89
BStC0313	SHWG	436- 16
BStC0326	SHWG	452- 9
BStC0340	SHWG	465- 23
BStC0353	SHWG	475- 9
BStC0366	SHWG	482- 41
BStC0380	SHWG	487- 77
BStC0506	SHWG	425- 7
BStC0513	SHWG	434- 22
BStC0526	SHWG	450- 19
BStC0533	SHWG	457- 73
BStC0540	SHWG	463- 58
BStC0546	SHWG	470- 90
BStD0313	SHWG	436- 35
BStD0320	SHWG	445- 48
BStD0326	SHWG	452- 27
BStD0340	SHWG	465- 38
BStD0353	SHWG	475- 15
BStD0366	SHWG	482- 44
BStD0380	SHWG	487- 80
BStE0240	SHWG	466- 22
BStE0260	SHWG	479-102
BStE0280	SHWG	487- 98
BStF0420	SHWG	445- 50
BStF0440	SHWG	466- 45
BStF0455	SHWG	475- 97

TYPE No.	MFRS	Pg&Line
BStF0460	SHWG	480- 6
BStF0520	SHWG	445- 52
BStF0540	SHWG	466- 47
BStF0560	SHWG	480- 8
BStF0590	SHWG	490- 73
BStF05110	SHWG	493- 46
BStG0220	♦SHWG	445- 93
BStG0240	♦SHWG	466-106
BStG0260	♦SHWG	480- 37
BStG0320	♦SHWG	445- 87
BStG0340	♦SHWG	466- 98
BStG0360	♦SHWG	480- 31
BStH0420	SHWG	446- 39
BStH0440	SHWG	467- 92
BStH0455	SHWG	477- 5
BStH0460	SHWG	480- 74
BStH0520	SHWG	446- 40
BStH0540	SHWG	467- 93
BStH0560	SHWG	480- 75
BStH0590	SHWG	490-102
BStH05110	SHWG	493- 68
BStL0220	♦SHWG	446-107
BStL0240	♦SHWG	469- 12
BStL0260	♦SHWG	481- 25
BStL2420	SHWG	446- 85
BStL2440	SHWG	468- 83
BStL2455	SHWG	477- 82
BStL2460	SHWG	481- 12
BStL2520	SHWG	446- 86
BStL2540	SHWG	468- 84
BStL2560	SHWG	481- 13
BStL2590	SHWG	491- 28
BStL25110	SHWG	493- 81
BStN0220	♦SHWG	447- 53
BStN0240	♦SHWG	469- 92
BStN0260	♦SHWG	481- 54
BStN1520	SHWG	447- 57
BStN1540	SHWG	469- 96
BStN1560	SHWG	481- 58
BStN1590	SHWG	491- 59
BStN2320	SHWG	447- 69
BStN2340	SHWG	470- 9
BStN2360	SHWG	481- 66
BStN2520	SHWG	447- 70
BStN2540	SHWG	470- 10
BStN2560	SHWG	481- 67
BStN2590	SHWG	491- 70
BStN15110	SHWG	494- 8
BStN25100	SHWG	493- 34
BStN25110	SHWG	494- 16
BStP0320	SHWG	447-103
BStP0340	SHWG	470- 59
BStP0360	SHWG	481- 94
BStP0520	SHWG	447-104
BStP0540	SHWG	470- 60
BStP0560	SHWG	481- 95
BStP0590	SHWG	491- 87
BStP1260	SHWG	481- 91
BStP05100	SHWG	493- 42
BStP05110	SHWG	494- 30
BSV01	MSDB	517- 47
BSV02	MSDB	517- 48
BSV11	MSDB	517- 9
BT100A300R	♦PHIC	442- 91
♦RADF	VALG	
BT100A500R	♦PHIC	457- 35
♦RADF	VALG	
BT101-300R	♦MULB	444- 41
♦PHIC	RADF	
	VALG	
BT101-500R	♦MULB	458- 85
♦PHIC	RADF	
	VALG	
BT102-300R	♦MULB	444- 42
♦PHIC	RADF	
	VALG	
BT102-500R	♦MULB	458- 86
PHIC	RADF	
	VALG	
BT106	♦MULB	470- 62
BT107	♦MULB	457-102
BT108	♦MULB	457-103
BTB50	♦BNT	294- 14
BTB100	♦BNT	300-102
BTB200	♦BNT	311- 91
BTB400	♦BNT	330- 73
BTB600	♦BNT	347-100
BTB800	♦BNT	360- 82
BTB1000	♦BNT	371- 10
BTB1200	♦BNT	378- 34
BTD0105	TEC	499- 58
BTD0110	TEC	499-106
BTD0120	TEC	501-106
BTD0130	TEC	503- 1
BTD0140	TEC	504-103
BTD0150	TEC	506- 97
BTD0160	TEC	507- 91
BTD0205	TEC	499- 59
BTD0210	TEC	500- 4
BTD0220	TEC	502- 10
BTD0230	TEC	503- 2
BTD0240	TEC	505- 5
BTD0250	TEC	506- 98
BTD0260	TEC	507- 92
BTD0305	TEC	499- 62
BTD0310	TEC	500- 8
BTD0320	TEC	502- 23
BTD0330	TEC	503- 5
BTD0340	TEC	505- 16
BTD0350	TEC	506-101
BTD0360	TEC	507- 95
BTM50	♦BNT	294- 15
BTM100	♦BNT	300-103
BTM200	♦BNT	311- 92

△-Registered with JEDEC by this manufacturer

♦-Copy of mfr's data sheet may be ordered from D.A.T.A.

1. TYPE No. CROSS INDEX

IN TYPE NUMBER SEQUENCE

TYPE No.	MFRS	Pg&Line
BTM400	♦BNT	330- 74
BTM600	♦BNT	347-101
BTM800	♦BNT	360- 83
BTM1000	♦BNT	371- 11
BTM1200	♦BNT	378- 35
BTR0205	TEC	499- 60
BTR0210	TEC	500- 5
BTR0220	TEC	502- 11
BTR0230	TEC	503- 3
BTR0240	TEC	505- 6
BTR0250	TEC	506- 99
BTR0260	TEC	507- 93
BTR0305	TEC	499- 63
BTR0310	TEC	500- 9
BTR0320	TEC	502- 24
BTR0330	TEC	503- 6
BTR0340	TEC	505- 17
BTR0350	TEC	506-102
BTR0360	TEC	507- 96
BTR0405	TEC	499- 66
BTR0410	TEC	500- 19
BTR0420	TEC	502- 50
BTR0430	TEC	503- 15
BTR0440	TEC	505- 40
BTR0450	TEC	506-108
BTR0460	TEC	507-102
BTS0205	TEC	499- 61
BTS0210	TEC	500- 6
BTS0220	TEC	502- 12
BTS0230	TEC	503- 4
BTS0240	TEC	505- 7
BTS0250	TEC	506-100
BTS0260	TEC	507- 94
BTS0305	TEC	499- 64
BTS0310	TEC	500- 10
BTS0320	TEC	502- 25
BTS0330	TEC	503- 7
BTS0340	TEC	505- 18
BTS0350	TEC	506-103
BTS0360	TEC	507- 97
BTS0405	TEC	499- 67
BTS0410	TEC	500- 20
BTS0420	TEC	502- 51
BTS0430	TEC	503- 16
BTS0440	TEC	505- 41
BTS0450	TEC	506-109
BTS0460	TEC	507-103
BTS0505	TEC	499- 76
BTS0510	TEC	500- 29
BTS0520	TEC	502- 70
BTS0530	TEC	503- 25
BTS0540	TEC	505- 62
BTS0550	TEC	507- 10
BTS0560	TEC	508- 6
BTS3500	♦BNT	250- 73
BTS3600	♦BNT	247- 82
BTU0305	TEC	499- 65
BTU0310	TEC	500- 11
BTU0320	TEC	502- 26
BTU0330	TEC	503- 8
BTU0340	TEC	505- 19
BTU0350	TEC	506-104
BTU0360	TEC	507- 98
BTU0405	TEC	499- 68
BTU0410	TEC	500- 21
BTU0420	TEC	502- 52
BTU0430	TEC	503- 17
BTU0440	TEC	505- 42
BTU0450	TEC	506-110
BTU0460	TEC	507-104
BTU0505	TEC	499- 77
BTU0510	TEC	500- 30
BTU0520	TEC	502- 71
BTU0530	TEC	503- 26
BTU0540	TEC	505- 63
BTU0550	TEC	507- 11
BTU0560	TEC	508- 7
BTU0605	TEC	499- 78
BTU0610	TEC	500- 31
BTU0620	TEC	502- 78
BTU0630	TEC	503- 29
BTU0640	TEC	505- 72
BTU0650	TEC	507- 15
BTU0660	TEC	508- 9
BTV0405	TEC	499- 69
BTV0410	TEC	500- 22
BTV0420	TEC	502- 53
BTV0430	TEC	503- 18
BTV0440	TEC	505- 43
BTV0460	TEC	507-105
BTX12/100R	PHIN	427- 8
BTX12/200R	PHIN	436- 48
BTX12/300R	PHIN	444- 77
BTX12/400R	PHIN	452- 42
BTX12/450R	PHIN	456- 83
BTX12/500R	PHIN	459- 10
BTX12/600R	PHIN	465- 50
BTX13/100R	PHIN	427- 69
	♦VALG	
BTX13/200R	PHIN	436-110
	♦VALG	
BTX13/300R	PHIN	445- 12
BTX13/400R	PHIN	452-109
	♦VALG	
BTX13/500R	PHIN	459- 64
	♦VALG	
BTX13/600R	PHIN	466- 5
	♦VALG	
BTX13/700R	PHIN	471- 48
BTX18-100	♦MULB	429- 90
♦PHIC	VALG	
BTX18-200	♦MULB	440- 32
♦PHIC	VALG	
BTX18-300	♦MULB	448- 10
♦PHIC	VALG	
BTX18-400	♦MULB	449- 19
	♦PHIC	
BTX18-500	♦MULB	457- 27
	♦PHIC	
BTX30-100	♦MULB	424- 28
	♦TAGS	
BTX30-200	♦MULB	433- 29
	♦TAGS	
BTX30-300	♦MULB	442- 81
	♦TAGS	
BTX30-400	♦MULB	449- 41
	♦TAGS	
BTX30-500	♦MULB	457- 31
	♦TAGS	
BTX31-100	TAGS	425- 84
BTX31-200	TAGS	434-107
BTX31-400	TAGS	450-103
BTX31-500	TAGS	458- 8
BTX31-600	TAGS	464- 14
BTX31-800	TAGS	474- 58
BTX31-1000	TAGS	482- 16
BTX31S100	TAGS	425- 85
BTX31S200	TAGS	434-108
BTX31S400	TAGS	450-104
BTX31S500	TAGS	458- 9
BTX31S600	TAGS	464- 15
BTX31S800	TAGS	474- 59
BTX31S1000	TAGS	482- 17
BTX32-100	TAGS	426- 35
BTX32-200	TAGS	435- 67
BTX32-400	TAGS	451- 64
BTX32-500	TAGS	458- 51
BTX32-600	TAGS	464- 77
BTX32-800	TAGS	474- 90
BTX32-1000	TAGS	482- 26
BTX32S100	TAGS	426- 36
BTX32S200	TAGS	435- 68
BTX32S400	TAGS	451- 65
BTX32S500	TAGS	458- 52
BTX32S600	TAGS	464- 78
BTX32S800	TAGS	474- 91
BTX32S1000	TAGS	482- 27
BTX33-100	TAGS	427- 15
BTX33-200	TAGS	436- 55
BTX33-400	TAGS	452- 49
BTX33-500	TAGS	459- 17
BTX33-600	TAGS	465- 56
BTX33-800	TAGS	475- 30
BTX33-1000	TAGS	482- 52
BTX33S100	TAGS	427- 16
BTX33S200	TAGS	436- 56
BTX33S400	TAGS	452- 50
BTX33S500	TAGS	459- 18
BTX33S600	TAGS	465- 57
BTX33S800	TAGS	475- 31
BTX33S1000	TAGS	482- 53
BTX35/500R	MULB	462- 73
♦PHIC	RADF	
	♦VALG	
BTX35/600R	MULB	470- 67
♦PHIC	RADF	
	♦VALG	
BTX35/700R	MULB	473- 87
♦PHIC	RADF	
	♦VALG	
BTX35/800R	MULB	479- 63
♦PHIC	RADF	
	♦VALG	
BTX36/500R	♦MULB	462- 74
♦PHIC	RADF	
	♦VALG	
BTX36/600R	♦MULB	470- 68
♦PHIC	RADF	
	♦VALG	
BTX36/700R	♦MULB	473- 88
♦PHIC	RADF	
	♦VALG	
BTX36/800R	♦MULB	479- 64
♦PHIC	RADF	
	♦VALG	
BTX37/500R	MULB	460- 47
♦PHIC	RADF	
	♦VALG	
BTX37/600R	MULB	467- 36
♦PHIC	RADF	
	♦VALG	
BTX37/700R	MULB	472- 8
♦PHIC	RADF	
	♦VALG	
BTX37/800R	MULB	476- 68
♦PHIC	RADF	
	♦VALG	
BTX38/500R	MULB	460- 75
♦PHIC	RADF	
	♦VALG	
BTX38/600R	♦PHIC	467- 3
	VALG	
BTX38/700R	MULB	472- 29
♦PHIC	RADF	
	♦VALG	
BTX38/800R	MULB	476-109
♦PHIC	RADF	
	♦VALG	
BTX41-800R	♦PHIC	478- 54
BTX41-1000R	♦PHIC	484- 99
BTX41-1200R	♦PHIC	489- 76
BTX41-1400R	♦PHIC	492- 68
BTX41-1600R	♦PHIC	493-106
BTX41/200R	♦VALG	439- 96
BTX41/1800R	♦VALG	494- 72
BTX46/200R	♦VALG	439- 65
BTX46/1800R	♦VALG	494- 61
BTX47/1000R	♦MULB	479- 72
♦PHIC	RADF	
	♦VALG	
BTX47/1200R	♦MULB	485- 87
♦PHIC	RADF	
	♦VALG	
BTX47/1400R	♦MULB	490- 56
♦PHIC	RADF	
	♦VALG	
BTX48/1000R	♦MULB	479- 77
♦PHIC	RADF	
	VALG	
BTX48/1200R	♦MULB	485- 92
♦PHIC	RADF	
	VALG	
BTX48/1400R	♦MULB	490- 60
♦PHIC	RADF	
	VALG	
BTX49-600R	♦MULB	466- 99
♦PHIC	RADF	
BTX49-700R	♦MULB	471- 95
♦PHIC	RADF	
BTX49-800R	♦MULB	476- 30
♦PHIC	RADF	
BTX49-900R	♦MULB	480- 32
	RADF	
BTX49-1000R	♦MULB	483- 16
♦PHIC	RADF	
	VALG	
BTX49-1100R	♦MULB	486- 26
	RADF	
BTX49-1200R	♦MULB	488- 32
♦PHIC	RADF	
	VALG	
BTX49-1400R	♦MULB	490- 82
PHIC	VALG	
BTX50-600R	♦MULB	467- 16
♦PHIC	RADF	
BTX50-700R	♦MULB	471-109
♦PHIC	RADF	
BTX50-800R	♦MULB	476- 47
♦PHIC	RADF	
BTX50-900R	♦MULB	480- 45
	RADF	
BTX50-1000R	♦MULB	483- 30
♦PHIC	RADF	
BTX50-1100R	♦MULB	486- 37
	RADF	
BTX50-1200R	♦MULB	488- 43
♦PHIC	RADF	
BTX51-500R	♦MULB	460- 72
BTX51-600R	♦MULB	467- 80
BTX51-700R	♦MULB	472- 26
BTX51-800R	♦MULB	476-106
BTX64/100R	♦MULB	425-103
	PHIC	
BTX64/200R	♦MULB	435- 23
	PHIC	
BTX64/300R	♦MULB	443- 95
	PHIC	
BTX64/400R	♦MULB	451- 22
	PHIC	
BTX64/500R	♦MULB	458- 22
	PHIC	
BTX64/600R	♦MULB	464- 36
	PHIC	
BTX65/100R	♦MULB	426- 46
BTX65/200R	♦MULB	435- 82
BTX65/300R	♦MULB	444- 25
BTX65/400R	♦MULB	451- 77
BTX65/500R	♦MULB	458- 66
BTX65/600R	♦MULB	464- 94
BTX66/100R	♦MULB	427- 75
	PHIC	
BTX66/200R	♦MULB	437- 6
	PHIC	
BTX66/300R	♦MULB	445- 17
	PHIC	
BTX66/400R	♦MULB	453- 5
	PHIC	
BTX66/500R	♦MULB	459- 69
	PHIC	
BTX66/600R	♦MULB	466- 11
	PHIC	
BTX67/100R	♦MULB	428- 17
	PHIC	
BTX67/200R	♦MULB	437- 78
	PHIC	
BTX67/300R	♦MULB	445- 88
	PHIC	
BTX67/400R	♦MULB	453- 84
	PHIC	
BTX67/500R	♦MULB	460- 21
	PHIC	
BTX67/600R	♦MULB	466-100
	PHIC	
BTX68-500R	♦MULB	462- 69
♦PHIC	RADF	
BTX68-600R	♦MULB	470- 66
♦PHIC	RADF	
BTX68-700R	♦MULB	473- 86
♦PHIC	RADF	
BTX68-800R	♦MULB	479- 62
♦PHIC	RADF	
BTX68-1000R	♦MULB	482- 15
	♦PHIC	
BTX70-100	TAGS	426- 70
BTX70-200	TAGS	435-104
BTX70-400	TAGS	451- 99
BTX70-500	TAGS	458- 87
BTX70-600	TAGS	465- 4
BTX70-800	TAGS	474-100
BTX70-1000	TAGS	482- 34
BTX70S100	TAGS	426- 71
BTX70S200	TAGS	435-105
BTX70S400	TAGS	451-100
BTX70S500	TAGS	458- 88
BTX70S600	TAGS	465- 5
BTX70S800	TAGS	474-101
BTX70S1000	TAGS	482- 35
BTX71-100	TAGS	425- 86
BTX71-200	TAGS	434-109
BTX71-400	TAGS	450-105
BTX71-500	TAGS	458- 10
BTX71-600	TAGS	464- 16
BTX71-800	TAGS	474- 60
BTX71-1000	TAGS	482- 18
BTX71S100	TAGS	425- 87
BTX71S200	TAGS	434-110
BTX71S400	TAGS	450-106
BTX71S500	TAGS	458- 11
BTX71S600	TAGS	464- 17
BTX71S800	TAGS	474- 61
BTX71S1000	TAGS	482- 19
BTX72-100	TAGS	426- 37
BTX72-200	TAGS	435- 69
BTX72-400	TAGS	451- 66
BTX72-500	TAGS	458- 53
BTX72-600	TAGS	464- 79
BTX72-800	TAGS	474- 92
BTX72-1000	TAGS	482- 28
BTX72S100	TAGS	426- 38
BTX72S200	TAGS	435- 70
BTX72S400	TAGS	451- 67
BTX72S500	TAGS	458- 54
BTX72S600	TAGS	464- 80
BTX72S800	TAGS	474- 93
BTX72S1000	TAGS	482- 29
BTX73-100	♦TAGS	427- 54
BTX73-200	♦TAGS	436- 94
BTX73-400	♦TAGS	452- 90
BTX73-500	♦TAGS	459- 51
BTX73-600	♦TAGS	465-103
BTX73-800	♦TAGS	475- 65
BTX73-1000	♦TAGS	482- 63
BTX73S100	♦TAGS	427- 55
BTX73S200	♦TAGS	436- 95
BTX73S400	♦TAGS	452- 91
BTX73S500	♦TAGS	459- 52
BTX73S600	♦TAGS	465-104
BTX73S800	♦TAGS	475- 66
BTX73S1000	♦TAGS	482- 64
BTX74-100	TAGS	426- 72
BTX74-200	TAGS	435-106
BTX74-400	TAGS	451-101
BTX74-500	TAGS	458- 89
BTX74-600	TAGS	465- 6
BTX74-800	TAGS	474-102
BTX74-1000	TAGS	482- 36
BTX74S100	TAGS	426- 73
BTX74S200	TAGS	435-107
BTX74S400	TAGS	451-102
BTX74S500	TAGS	458- 90
BTX74S600	TAGS	465- 7
BTX74S800	TAGS	474-103
BTX74S1000	TAGS	482- 37
BTX75-100R	♦MULB	425-104
BTX75-200R	♦MULB	435- 24
BTX75-300R	♦MULB	443- 96
BTX75-400R	♦MULB	451- 23
BTX76-100R	♦MULB	426- 54
BTX76-200R	♦MULB	435- 90
BTX76-300R	♦MULB	444- 33
BTX76-400R	♦MULB	451- 85
BTX81-100R	♦MULB	427- 26
PHIC	RADF	
	VALG	
BTX81-200R	♦MULB	436- 66
PHIC	RADF	
	VALG	
BTX81-300R	♦MULB	444- 91
PHIC	RADF	
BTX81-400R	♦MULB	452- 60
♦PHIC	RADF	
	VALG	
BTX81-500R	♦MULB	459- 32
♦PHIC	RADF	
	VALG	
BTX81-600R	♦MULB	465- 71
♦PHIC	RADF	
	VALG	
BTX81-700R	♦MULB	471- 29
♦PHIC	RADF	
	VALG	
BTX81-800R	♦MULB	475- 37
♦PHIC	RADF	
	VALG	
BTX82-100R	♦MULB	427- 68
PHIC	RADF	
	VALG	
BTX82-200R	♦MULB	436-109
PHIC	RADF	
	VALG	
BTX82-300R	♦MULB	445- 11
PHIC	RADF	
BTX82-400R	♦MULB	452-106
♦PHIC	RADF	
	VALG	
BTX82-500R	♦MULB	459- 61
♦PHIC	RADF	
	VALG	
BTX82-600R	♦MULB	466- 2
♦PHIC	RADF	
	VALG	
BTX82-700R	♦MULB	471- 45
♦PHIC	RADF	
	VALG	
BTX82-800R	♦MULB	475- 71
♦PHIC	RADF	
	VALG	
BTX92-800R	♦MULB	475- 16
♦PHIC	RADF	
	♦VALG	
BTX92-900R	♦MULB	479- 78
RADF	♦VALG	
BTX92-1000R	♦MULB	482- 45
♦PHIC	RADF	
	♦VALG	
BTX92-1100R	♦MULB	485- 93
RADF	♦VALG	
BTX92-1200R	♦MULB	487- 81
♦PHIC	RADF	
	♦VALG	
BTX94-100	♦MULB	500- 32
	VALG	
BTX94-200	♦MULB	502- 79
	VALG	
BTX94-300	♦MULB	503- 30
	VALG	
BTX94-400	♦MULB	505- 73
♦PHIC	VALG	
BTX94-500	♦MULB	507- 16
♦PHIC	VALG	
BTX94-600	♦MULB	508- 10
♦PHIC	VALG	
BTX94-700	♦MULB	508- 68
♦PHIC	VALG	
BTX94-800	♦MULB	509- 7
♦PHIC	VALG	
BTX94-1000	♦PHIC	509- 16
BTX94-1200	♦PHIC	509- 25
BTY34-100R	♦MULB	425- 61
BTY34-200R	♦MULB	434- 79
BTY34-300R	♦MULB	443- 61
BTY34-400R	♦MULB	450- 75
BTY79	RADF	430- 76
	VALG	
BTY79-100R	MULB	425- 60
PHIC	♦VALG	
BTY79-150R	MULB	430- 83
BTY79-200R	MULB	434- 78
PHIC	♦VALG	
BTY79-250R	MULB	440-103
BTY79-300R	MULB	443- 60
	♦PHIC	
BTY79-400R	♦MULB	450- 60
♦PHIC	♦VALG	
BTY79-500R	MULB	457- 99
♦PHIC	♦RADF	
	♦VALG	
BTY79-600R	MULB	463-108
♦PHIC	♦RADF	
	♦VALG	
BTY79-700R	MULB	470- 92
♦PHIC	♦RADF	
	♦VALG	
BTY79-800R	MULB	474- 50
♦PHIC	♦RADF	
	♦VALG	
BTY79-900R	MULB	479- 67
BTY79-1000R	MULB	482- 14
♦PHIC	♦RADF	
	VALG	
BTY80	PHIN	440-100
BTY81	PHIN	450- 1
BTY84	VALG	426- 2
BTY85	VALG	435- 33
BTY86	VALG	443-101
BTY87	RADF	451- 32
	VALG	
BTY87/100R	♦MULB	426- 65
PHIC	RADF	
	♦VALG	
BTY87/150R	♦MULB	430- 98
BTY87/200R	♦MULB	435- 99
PHIC	RADF	
	♦VALG	
BTY87/250R	♦MULB	441- 7
BTY87/300R	♦MULB	444- 40
PHIC	RADF	
BTY87/400R	♦MULB	451- 96
♦PHIC	PHIN	
RADF	♦VALG	
BTY87/500R	♦MULB	458- 82
♦PHIC	PHIN	
RADF	♦VALG	
BTY87/600R	♦MULB	465- 1
♦PHIC	PHIN	
RADF	♦VALG	
BTY87/700R	♦MULB	471- 9
♦PHIC	PHIN	
RADF	♦VALG	
BTY87/800R	♦MULB	474- 97
♦PHIC	RADF	
	♦VALG	
BTY88	VALG	426- 84
BTY89	VALG	436- 10
BTY90	VALG	444- 43
BTY91	RADF	452- 3
	VALG	
BTY91/100R	♦MULB	426-105
PHIC	♦RADF	
	♦VALG	
BTY91/150R	♦MULB	430-102
BTY91/200R	♦MULB	436- 33
PHIC	♦RADF	
	♦VALG	
BTY91/250R	♦MULB	441- 13
BTY91/300R	♦MULB	444- 64
PHIC	♦RADF	

Δ-Registered with JEDEC by this manufacturer

♦-Copy of mfr's data sheet may be ordered from D.A.T.A.

1. TYPE No. CROSS INDEX

IN TYPE NUMBER SEQUENCE

TYPE No.	MFRS	Pg&Line
BTY91/400R	♦MULB	452- 25
♦PHIC	PHIN	
♦RADF	♦VALG	
BTY91/500R	♦MULB	458-106
♦PHIC	PHIN	
♦RADF	♦VALG	
BTY91/600R	♦MULB	465- 36
♦PHIC	PHIN	
♦RADF	♦VALG	
BTY91/700R	♦MULB	471- 16
♦PHIC	PHIN	
RADF	♦VALG	
BTY91/800R	♦MULB	475- 13
♦PHIC	♦RADF	
	♦VALG	
BTY95	RADF	454- 14
BTY95-400R	VALG	453- 63
BTY95/100R	MULB	428- 3
PHIC	PHIN	
♦RADF	♦VALG	
BTY95/150R	MULB	431- 20
BTY95/200R	MULB	437- 60
PHIC	PHIN	
♦RADF	♦VALG	
BTY95/250R	MULB	441- 40
BTY95/300R	MULB	445- 63
PHIC	PHIN	
♦RADF	♦VALG	
BTY95/400R	MULB	453- 66
PHIC	PHIN	
RADF	♦VALG	
BTY95/500R	MULB	460- 2
♦PHIC	PHIN	
♦RADF	VALG	
BTY95/600R	MULB	466- 74
♦PHIC	PHIN	
♦RADF	VALG	
BTY95/700R	MULB	471- 80
♦PHIC	PHIN	
♦RADF	VALG	
BTY95/800R	MULB	476- 15
♦PHIC	♦RADF	
	VALG	
BTY99	RADF	454- 66
BTY99/100R	MULB	428- 28
PHIC	PHIN	
RADF	♦VALG	
BTY99/150R	MULB	431- 34
BTY99/200R	MULB	437- 92
PHIC	PHIN	
RADF	♦VALG	
BTY99/250R	MULB	441- 55
BTY99/300R	MULB	445-106
PHIC	PHIN	
RADF	VALG	
BTY99/400R	MULB	453-105
PHIC	PHIN	
RADF	♦VALG	
BTY99/500R	MULB	460- 38
PHIC	PHIN	
RADF	♦VALG	
BTY99/600R	MULB	467- 17
PHIC	PHIN	
RADF	♦VALG	
BTY99/700R	MULB	471-110
PHIC	PHIN	
RADF	♦VALG	
BTY99/800R	MULB	476- 48
PHIC	RADF	
	♦VALG	
BV100	SIX	562- 83
BV110	SIX	561- 83
BV120	SIX	556- 72
BV130	SIX	543- 14
BV140	SIX	533- 50
BV150	SIX	529- 6
BXY10C	SHWG	531- 91
BXY10D	SHWG	533-103
BXY11E	SHWG	537- 74
BXY11F	SHWG	544- 41
BXY13C	SHWG	531- 92
BXY13D	SHWG	533-104
BXY14E	SHWG	537- 75
BXY14F	SHWG	544- 42
BXY19E	SHWG	538- 84
BXY19F	SHWG	544- 43
BXY22G	SHWG	542- 64
BXY22H	SHWG	544- 9
BXY22J	SHWG	544- 39
BXY23	SHWG	544- 10
BXY27	APX	534- 5
♦MULB	♦PHIC	
RADF	♦VALG	
BXY28	APX	529- 40
♦MULB	♦PHIC	
RADF	♦VALG	
BXY29	♦MULB	528- 9
♦PHIC	RADF	
	♦VALG	
BXY32	APX	527- 10
♦MULB	♦PHIC	
RADF	♦VALG	
BY100△	♦AEIL	360- 23
BY100⊘	BELI	359- 76
♦MULB	PHIC	
PHIN	VALG	
BY101△	AEIL	338- 47
BY101⊘	BRA	294- 53
BY102	BRA	301- 47
BY103△	BRA	312- 46
BY103⊘	INTG	381- 33
	ITTB	
BY104⊘	BRA	322- 14
BY105△	AEIL	361- 27

TYPE No.	MFRS	Pg&Line
BY105⊘	BRA	331- 26
BY106	BRA	340- 94
BY107	BRA	348- 47
BY108	BRA	355- 92
BY109	BRA	361- 21
BY111	BRA	294- 54
BY112△	BRA	301- 48
BY113△	BRA	312- 47
BY114△	BRA	322- 15
BY114⊘	AEIL	338- 43
BELI	♦MULB	
PHIC	PHIN	
BY115	BRA	331- 27
BY116	BRA	340- 95
BY117	BRA	348- 48
BY118△	BRA	355- 93
BY118⊘	APX	323- 82
♦MULB	♦PHIC	
PHIN	♦RADF	
	♦VALG	
BY119	BRA	361- 22
BY121	BRA	294- 55
BY122	BRA	307- 27
♦MULB	♦PHIC	
BY123	BRA	312- 48
	♦PHIC	
BY124△	AEIL	293- 18
BY124⊘	BRA	322- 16
BY125△	AEIL	310- 9
BY125⊘	BRA	331- 28
BY126	APX	340- 96
BELI	BRA	
♦MULB	♦PHIC	
	RADF	
BY126/50	MINA	294- 68
BY126/100	MINA	301- 10
BY126/200	MINA	312- 7
BY126/300	MINA	321-103
BY126/400	MINA	330- 97
BY127△	♦VALG	360-106
BY127⊘	APX	348- 49
BELI	BRA	
♦MULB	♦PHIC	
	RADF	
BY127/500	MINA	340- 77
BY127/600	MINA	348- 16
BY127/700	MINA	355- 87
BY127/800	MINA	360-107
BY128	BRA	355- 94
BY129	BRA	361- 23
BY130	AEIL	338- 44
BY133	INTG	381- 34
BY134	INTG	347-102
BY135	INTG	307- 82
BY139	AEIL	338- 40
BY140	APX	407-110
♦PHIC	♦VALG	
BY140A	♦MULB	406- 90
BY141	AEIL	292- 83
BY156	GICI	359- 94
BY157	GICI	359- 28
BY158	GICI	329- 45
BY164	APX	307- 29
♦PHIC	♦RADF	
	♦VALG	
BY167	♦TFKG	290- 43
BY172	♦GICI	361- 46
BY173	♦GICI	348- 76
BY174	♦GICI	331- 51
BY176	APX	408- 1
♦PHIC	RADF	
	♦VALG	
BY179	♦APX	320- 12
♦PHIC	RADF	
	♦VALG	
BY183-50	ESMF	292- 99
	MISI	
BY183-100	ESMF	299- 11
	MISI	
BY183-200	ESMF	309- 81
	MISI	
BY183-300	ESMF	320- 42
	MISI	
BY183-400	ESMF	328- 35
	MISI	
BY183-500	ESMF	339- 6
	MISI	
BY183-600	ESMF	345-100
	MISI	
BY184	APX	261- 11
♦PHIC	♦VALG	388- 1
BY185	APX	412- 96
	♦VALG	
BY187	APX	406- 63
	♦VALG	
BY201	BRA	295- 46
BY202	BRA	302- 78
BY203	BRA	313- 87
BY204	BRA	323- 17
BY205	BRA	332- 80
BY206	BRA	341- 92
BY207	BRA	349- 95
BY208	BRA	356- 49
BY209	BRA	362- 49
BY211	BRA	295- 47
BY212	BRA	302- 79
BY213	BRA	313- 88
BY214	BRA	323- 18
BY215	BRA	332- 81
BY216	BRA	341- 93
BY217	BRA	349- 96
BY218	BRA	356- 50
BY219	BRA	362- 50
BY221	BRA	295- 48

TYPE No.	MFRS	Pg&Line
BY222	BRA	302- 80
BY223	BRA	313- 89
BY224	BRA	323- 19
BY225	BRA	332- 82
BY226	BRA	341- 94
BY227	BRA	349- 97
BY228	BRA	356- 51
BY229	BRA	362- 51
BY301	BRA	295- 49
BY302	BRA	302- 81
BY303	BRA	313- 90
BY304	BRA	323- 20
BY305	BRA	332- 83
BY306	BRA	341- 95
BY307	BRA	349- 98
BY308	BRA	356- 52
BY309	BRA	362- 52
BY311	BRA	295- 50
BY312	BRA	302- 82
BY313	BRA	313- 91
BY314	BRA	323- 21
BY315	BRA	332- 84
BY316	BRA	341- 96
BY317	BRA	349- 99
BY318	BRA	356- 53
BY319	BRA	362- 53
BY321	BRA	295- 51
BY322	BRA	302- 83
BY323	BRA	313- 92
BY324	BRA	323- 22
BY325	BRA	332- 85
BY326	BRA	341- 97
BY327	BRA	349-100
BY328	BRA	356- 54
BY329	BRA	362- 54
BY401	BRA	296- 15
BY402	BRA	303- 81
BY403	BRA	314-101
BY404	BRA	324- 4
BY405	BRA	333-100
BY406	BRA	342- 65
BY407	BRA	351- 6
BY408	BRA	356-100
BY409	BRA	363- 53
BY411	BRA	296- 16
BY412	BRA	303- 82
BY413	BRA	314-102
BY414	BRA	324- 5
BY415	BRA	333-101
BY416	BRA	342- 66
BY417	BRA	351- 7
BY418	BRA	356-101
BY419	BRA	363- 54
BY421	BRA	296- 17
BY422	BRA	303- 83
BY423	BRA	314-103
BY424	BRA	324- 6
BY425	BRA	333-102
BY426	BRA	342- 67
BY427	BRA	351- 8
BY428	BRA	356-102
BY429	BRA	363- 55
BY501	BRA	296- 67
BY502	BRA	304- 43
BY503	BRA	315- 72
BY504	BRA	324- 59
BY505	BRA	334- 79
BY506	BRA	343- 7
BY507	BRA	351- 87
BY508	BRA	357- 21
BY509	BRA	364- 17
BY511	BRA	296- 68
BY512	BRA	304- 44
BY513	BRA	315- 73
BY514	BRA	324- 60
BY515	BRA	334- 80
BY516	BRA	343- 8
BY517	BRA	351- 88
BY518	BRA	357- 22
BY519	BRA	364- 18
BY521	BRA	296- 69
BY522	BRA	304- 45
BY523	BRA	315- 74
BY524	BRA	324- 61
BY525	BRA	334- 81
BY526	BRA	343- 9
BY527	BRA	351- 89
BY528	BRA	357- 23
BY529	BRA	364- 19
BY701	BRA	296- 18
BY702	BRA	303- 84
BY703	BRA	314-104
BY704	BRA	324- 7
BY705	BRA	333-103
BY706	BRA	342- 68
BY707	BRA	351- 9
BY708	BRA	356-103
BY709	BRA	363- 56
BY711	BRA	296- 19
BY712	BRA	303- 85
BY713	BRA	314-105
BY714	BRA	324- 8
BY715	BRA	333-104
BY716	BRA	342- 69
BY717	BRA	351- 10
BY718	BRA	356-104
BY719	BRA	363- 57
BY721	BRA	296- 20
BY722	BRA	303- 86
BY723	BRA	314-106
BY724	BRA	324- 9
BY725	BRA	333-105
BY726	BRA	342- 70
BY727	BRA	351- 11

TYPE No.	MFRS	Pg&Line
BY728	BRA	356-105
BY729	BRA	363- 58
BY801	BRA	296- 70
BY802	BRA	304- 46
BY803	BRA	315- 75
BY804	BRA	324- 62
BY805	BRA	334- 82
BY806	BRA	343- 10
BY807	BRA	351- 90
BY808	BRA	357- 24
BY809	BRA	364- 20
BY811	BRA	296- 71
BY812	BRA	304- 47
BY813	BRA	315- 76
BY814	BRA	324- 63
BY815	BRA	334- 83
BY816	BRA	343- 11
BY817	BRA	351- 91
BY818	BRA	357- 25
BY819	BRA	364- 21
BY821	BRA	296- 72
BY822	BRA	304- 48
BY823	BRA	315- 77
BY824	BRA	324- 64
BY825	BRA	334- 84
BY826	BRA	343- 12
BY827	BRA	351- 92
BY828	BRA	357- 26
BY829	BRA	364- 22
BY1001	BRA	367- 12
BY1002	BRA	371- 56
BY1101	BRA	367- 13
BY1102	BRA	371- 57
BY1201	BRA	367- 14
BY1202	BRA	371- 58
BY2001	BRA	367- 33
BY2002	BRA	372- 62
BY2101	BRA	367- 34
BY2102	BRA	372- 63
BY2201	BRA	367- 35
BY2202	BRA	372- 64
BY3001	BRA	367- 36
BY3002	BRA	372- 65
BY3101	BRA	367- 37
BY3102	BRA	372- 66
BY3201	BRA	367- 38
BY3202	BRA	372- 67
BY4001	BRA	367- 69
BY4002	BRA	373- 41
BY4101	BRA	367- 70
BY4102	BRA	373- 42
BY4201	BRA	367- 71
BY4202	BRA	373- 43
BY5001	BRA	367- 94
BY5002	BRA	373-102
BY5101	BRA	367- 95
BY5102	BRA	373-103
BY5201	BRA	367- 96
BY5202	BRA	373-104
BY7001	BRA	367- 72
BY7002	BRA	373- 44
BY7101	BRA	367- 73
BY7102	BRA	373- 45
BY7201	BRA	367- 74
BY7202	BRA	373- 46
BY8001	BRA	367- 97
BY8002	BRA	373-105
BY8101	BRA	367- 98
BY8102	BRA	373-106
BY8201	BRA	367- 99
BY8202	BRA	373-107
BYX10	APX	359- 17
♦MULB	♦PHIC	
PHIN	RADF	
	♦VALG	
BYX11	VALG	389- 23
BYX13/400	MULB	335- 22
PHIN	RADF	
	♦VALG	
BYX13/600	PHIN	352- 22
	RADF	
BYX13/800	MULB	364- 52
♦PHIC	PHIN	
RADF	♦VALG	
BYX13/1000	♦PHIC	374- 24
PHIN	RADF	
BYX13/1200	MULB	379- 65
♦PHIC	PHIN	
RADF	♦VALG	
BYX13/1600	MULB	386- 71
PHIN	RADF	
	♦VALG	
BYX14/400	♦MULB	337- 5
PHIC	PHIN	
	♦VALG	
BYX14/600	PHIC	353- 78
	PHIN	
BYX14/800	♦MULB	365- 87
PHIC	PHIN	
	♦VALG	
BYX14/1000	PHIC	375- 24
	PHIN	
BYX14/1200	♦MULB	380- 28
PHIC	PHIN	
	♦VALG	
BYX15	MULB	365- 1
PHIC	PHIN	
BYX16	MULB	365- 2
PHIC	PHIN	
BYX21/100	♦VALG	305- 10
BYX21/200	♦VALG	316- 47
BYX21L100	♦MINA	297- 17
BYX21L200	♦MINA	305- 12
BYX21L400	♦MINA	316- 54

TYPE No.	MFRS	Pg&Line
BYX22-200	♦MULB	312- 95
BYX22-400	♦MULB	330- 57
BYX22-600	♦MULB	348-104
	♦PHIC	
BYX22-800	♦MULB	361- 70
BYX22-1200	♦PHIC	378- 62
BYX23/400	♦PHIC	336-108
RADF	VALG	
BYX23/600	♦PHIC	353- 71
RADF	VALG	
BYX23/800	♦PHIC	365- 80
	RADF	
BYX23/1000	♦PHIC	375- 18
RADF	VALG	
BYX25/600	♦MULB	352- 29
♦PHIC	RADF	
	♦VALG	
BYX25/800	♦MULB	364- 56
♦PHIC	RADF	
	♦VALG	
BYX25/1000	♦MULB	374- 28
♦PHIC	RADF	
	♦VALG	
BYX26-60	♦MULB	298- 36
BYX26-150	♦MULB	307- 60
BYX27/400	♦PHIC	337- 48
RADF	VALG	
BYX27/600	♦PHIC	353-110
RADF	VALG	
BYX27/800	♦PHIC	366- 6
	RADF	
BYX27/1000	♦PHIC	375- 49
RADF	VALG	
BYX28/200,A,B	VALG	316- 19
BYX28/400,A,B	VALG	335- 23
BYX29/100000	♦MULB	413- 23
♦PHIC	♦RADF	
	♦VALG	
BYX29/125000	♦MULB	413- 35
♦PHIC	♦VALG	
BYX29/150000	♦MULB	413- 39
♦PHIC	♦RADF	
	♦VALG	
BYX29/75000	♦MULB	413- 17
♦PHIC	♦RADF	
	♦VALG	
BYX30/200	♦MULB	283- 18
♦PHIC	♦RADF	
	♦VALG	
BYX30/300	♦MULB	284- 57
♦PHIC	♦RADF	
	♦VALG	
BYX30/400	♦MULB	285- 78
♦PHIC	♦RADF	
	♦VALG	
BYX30/500	♦MULB	286- 51
♦PHIC	♦RADF	
	♦VALG	
BYX30/600	♦MULB	287- 16
	♦PHIC	
BYX32/200	♦PHIC	317- 74
♦RADF	♦VALG	
BYX32/400	♦MULB	336-103
♦PHIC	♦RADF	
	♦VALG	
BYX32/600	♦PHIC	353- 65
♦RADF	♦VALG	
BYX32/800	♦MULB	365- 74
♦PHIC	♦RADF	
BYX32/1000	♦PHIC	375- 12
♦RADF	♦VALG	
BYX32/1200	♦MULB	380- 7
♦PHIC	♦RADF	
BYX32/1600	♦MULB	386- 89
♦PHIC	♦RADF	
	♦VALG	
BYX33/200	♦PHIC	318- 19
RADF	♦VALG	
BYX33/400	♦MULB	337- 61
♦PHIC	RADF	
	♦VALG	
BYX33/600	♦PHIC	354- 12
RADF	♦VALG	
BYX33/800	♦MULB	366- 16
♦PHIC	RADF	
BYX33/1000	♦PHIC	375- 58
RADF	♦VALG	
BYX33/1200	♦MULB	380- 56
♦PHIC	♦RADF	
BYX33/1600	♦MULB	387- 6
♦PHIC	♦RADF	
	♦VALG	
BYX34/200	♦MULB	317- 29
♦PHIC	♦RADF	
	♦VALG	
BYX34/300	♦MULB	325- 70
♦PHIC	♦RADF	
	♦VALG	
BYX34/400	♦MULB	336- 51
♦PHIC	♦RADF	
	♦VALG	
BYX34/500	♦MULB	343-108
♦PHIC	♦RADF	
	♦VALG	
BYX35	♦MULB	411- 15
♦PHIC	RADF	
BYX36/150	APX	300- 95
♦MULB	♦PHIC	
♦RADF	♦VALG	
BYX36/300	APX	311- 82
♦MULB	♦PHIC	
♦RADF	♦VALG	
BYX36/600	APX	330- 64

cont.next page

△-Registered with JEDEC by this manufacturer

♦-Copy of mfr's data sheet may be ordered from D.A.T.A.

1. TYPE No. CROSS INDEX

IN TYPE NUMBER SEQUENCE

TYPE No.	MFRS	Pg&Line
BYX36/600		
(cont.)	♦MULB	
♦PHIC	♦RADF	
	♦VALG	
BYX38/300	APX	313- 82
♦MULB	♦PHIC	
♦RADF	♦VALG	
BYX38/300R	APX	313- 83
MULB	RADF	
BYX38/600	APX	332- 68
♦MULB	♦PHIC	
♦RADF	♦VALG	
BYX38/600R	APX	332- 69
MULB	RADF	
BYX38/900	APX	349- 84
♦MULB	♦PHIC	
♦RADF	♦VALG	
BYX38/900R	APX	349- 85
MULB	RADF	
BYX38/1200	APX	362- 37
♦MULB	♦PHIC	
♦RADF	♦VALG	
BYX38/1200R	APX	362- 38
MULB	RADF	
BYX39/600	♦MULB	350- 99
♦PHIC	♦RADF	
	♦VALG	
BYX39/800	♦MULB	363- 33
♦PHIC	♦RADF	
	♦VALG	
BYX39/1000	♦MULB	373- 27
♦PHIC	♦RADF	
	♦VALG	
BYX40-600	♦MULB	351- 72
♦PHIC	♦VALG	
BYX40-800	♦MULB	363-105
♦PHIC	♦VALG	
BYX40-1000	♦MULB	373- 87
♦PHIC	♦VALG	
BYX42/300	APX	324- 34
♦MULB	♦PHIC	
♦RADF	♦VALG	
BYX42/600	APX	351- 49
♦MULB	♦PHIC	
♦RADF	♦VALG	
BYX42/900	APX	367- 80
♦MULB	♦PHIC	
♦RADF	♦VALG	
BYX42/1200	APX	379- 46
♦MULB	♦PHIC	
♦RADF	♦VALG	
BYX45-600R	♦MULB	349- 15
♦PHIC	♦VALG	
BYX45-800R	♦MULB	361- 88
♦PHIC	♦VALG	
BYX45-1000R	♦MULB	372- 3
♦PHIC	♦VALG	
BYX46-200	♦MULB	283- 19
	♦PHIC	
BYX46-300	♦MULB	284- 58
	♦PHIC	
BYX46-400	♦MULB	285- 79
♦PHIC	RADF	
BYX46-500	♦MULB	286- 52
♦PHIC	RADF	
BYX46-600	♦MULB	287- 17
♦PHIC	RADF	
BYX47	RADF	390- 58
BYX48/300	♦MULB	323-105
♦PHIC	♦RADF	
	VALG	
BYX48/600	♦MULB	350-100
♦PHIC	♦RADF	
	VALG	
BYX48/900	♦MULB	367- 57
♦PHIC	♦RADF	
	VALG	
BYX48/1200	♦MULB	379- 27
♦PHIC	♦RADF	
	VALG	
BYX50-200	♦MULB	314- 91
♦PHIC	♦VALG	
BYX50-300	♦MULB	323-104
♦PHIC	♦VALG	
BYX50-400	♦MULB	333- 84
♦PHIC	♦VALG	
BYX50-500	♦MULB	342- 50
♦PHIC	♦VALG	
BYX50-600	♦MULB	350- 98
♦PHIC	♦VALG	
BYX51-1200	♦PHIC	380-100
BYX51-1600	♦PHIC	387- 43
BYX51-2000	♦PHIC	390- 80
BYX52-300	♦MULB	316- 93
♦PHIC	♦RADF	
	♦VALG	
BYX52-600	♦MULB	335-103
♦PHIC	♦RADF	
	♦VALG	
BYX52-900	♦MULB	352- 89
♦PHIC	♦RADF	
	♦VALG	
BYX52-1200	♦MULB	364- 98
♦PHIC	♦RADF	
	♦VALG	
BYX56-600	♦MULB	352-107
	♦PHIC	
BYX56-800	♦MULB	365- 12
	♦PHIC	
BYX56-1000	♦MULB	374- 68
	♦PHIC	
BYX59-200	♦PHIC	283- 32
BYX59-300	♦PHIC	284- 60
BYX59-400	♦PHIC	285- 88

TYPE No.	MFRS	Pg&Line
BYX59-500	♦PHIC	286- 57
BYX60-50	ESMF	293- 9
	MISI	
BYX60-100	ESMF	299- 37
	MISI	
BYX60-200	ESMF	309-108
	MISI	
BYX60-300	ESMF	320- 65
	MISI	
BYX60-400	ESMF	328- 64
	MISI	
BYX60-500	ESMF	339- 28
	MISI	
BYX60-600	ESMF	346- 15
	MISI	
BYX60-700	ESMF	355- 16
	MISI	
BYX61-50	♦ESMF	272- 20
	MISI	
BYX61-100	♦ESMF	278- 80
	MISI	
BYX61-200	♦ESMF	282- 31
	MISI	
BYX61-300	♦ESMF	284- 26
	MISI	
BYX61-400	♦ESMF	285- 12
	MISI	
BYX62-600	♦ESMF	286- 98
	MISI	
BYX63-600	♦ESMF	286- 99
	MISI	
BYX64-600	♦ESMF	286-100
	MISI	
BYX65-50	♦ESMF	272- 21
	MISI	
BYX65-100	♦ESMF	278- 81
	MISI	
BYX65-200	♦ESMF	282- 32
	MISI	
BYX65-300	♦ESMF	284- 27
	MISI	
BYX65-400	♦ESMF	285- 13
	MISI	
BYX66-600	♦ESMF	287- 32
	MISI	
BYX66-800	♦ESMF	287- 91
	MISI	
BYX66-1000	♦ESMF	288- 40
	MISI	
BYX67-600	♦ESMF	287- 33
	MISI	
BYX67-800	♦ESMF	287- 92
	MISI	
BYX67-1000	♦ESMF	288- 41
	MISI	
BYY10	PHIN	338- 94
	♦VALG	
BYY15	MULB	336- 10
PHIC	PHIN	
	♦VALG	
BYY16	MULB	335- 30
PHIC	PHIN	
	♦VALG	
BYY20	MULB	298- 60
PHIN	VALG	
BYY20/200	VALG	316- 6
BYY21	MULB	298- 61
PHIN	VALG	
BYY21/200	VALG	316- 7
BYY22	MULB	315-105
PHIC	PHIN	
	VALG	
BYY23	MULB	315-106
PHIC	PHIN	
	VALG	
BYY24	MULB	335- 5
PHIC	PHIN	
	VALG	
BYY25	MULB	335- 6
PHIC	PHIN	
	VALG	
BYY31	INTG	307- 83
BYY32	INTG	321- 89
BYY33	INTG	338- 45
BYY34	INTG	347-103
BYY35	INTG	358- 96
BYY36	INTG	367- 10
BYY37	INTG	371- 12
BYY67	PHIC	324- 41
PHIN	VALG	
BYY68	PHIC	324- 42
PHIN	VALG	
BYY69	VALG	342- 85
BYY70	VALG	342- 86
BYY71	VALG	351- 50
BYY72	VALG	351- 51
BYY73	PHIC	325- 41
PHIN	VALG	
BYY74	PHIC	325- 42
PHIN	VALG	
BYY75	PHIC	343- 86
PHIN	VALG	
BYY76	PHIC	343- 87
PHIN	VALG	
BYY77	MULB	352-101
PHIC	PHIN	
	♦VALG	
BYY78	MULB	352-102
PHIC	PHIN	
	♦VALG	
BYY88	INTG	307-108
BYY89	INTG	323- 72
BYY90	INTG	350- 60
BYY91	INTG	379- 10

TYPE No.	MFRS	Pg&Line
BYY92	INTG	386- 53
BYZ14	MULB	316-105
PHIC	PHIN	
	♦VALG	
BYZ15	MULB	316-106
PHIC	PHIN	
	♦VALG	
BZ3.6	LTTF	167-110
BZ3.9	LTTF	168- 61
BZ4 3	LTTF	169- 56
BZ4.7	LTTF	170- 44
BZ5.1	LTTF	171- 91
BZ5.6	LTTF	172-101
BZ6.2	LTTF	174- 69
BZ6 8	LTTF	176-196
BZ7 5	LTTF	179- 35
BZ8.2	LTTF	181- 84
BZ9.1	LTTF	184-215
BZ071	NJRC	179- 12
BZ075	NJRC	180- 41
BZ081	NJRC	181- 72
BZ085	NJRC	183-210
BZ090	NJRC	184-187
BZ094	NJRC	187- 35
BZ100△	NJRC	188-100
BZ100⊘	VALG	171- 70
BZ102-0V7	APD	165- 27
	♦TFKG	
BZ102-1V4	APD	165- 62
	♦TFKG	
BZ102-2V1	APD	165-125
	♦TFKG	
BZ102-2V8	APD	166- 64
	♦TFKG	
BZ102-3V4	APD	167- 90
	♦TFKG	
BZ110	NJRC	190- 94
BZ113	GICI	165- 68
BZ120	NJRC	192-169
BZ130	NJRC	195- 32
BZ140	NJRC	196- 81
BZ150	NJRC	197-184
BZ162	NJRC	200-143
BZ177	NJRC	201- 77
BZ192	NJRC	204- 69
BZ210	NJRC	206- 18
BZ230	NJRC	208- 19
BZ240	NJRC	209- 4
BZ260	NJRC	210- 90
BZ270	NJRC	211- 82
BZ290	NJRC	212-141
BZ310	NJRC	214- 76
BZX29C4V7	RADF	170-165
BZX29C5V1	RADF	172- 8
BZX29C5V6	♦PHIC	173- 75
RADF	♦VALG	
BZX29C6V2	♦PHIC	175- 50
RADF	♦VALG	
BZX29C6V8	♦PHIC	177-170
RADF	♦VALG	
BZX29C7V5	♦PHIC	180- 42
RADF	♦VALG	
BZX29C8V2	♦PHIC	182- 89
RADF	♦VALG	
BZX29C9V1	♦PHIC	186- 22
RADF	♦VALG	
BZX29C10	♦PHIC	188-101
RADF	♦VALG	
BZX29C11	♦PHIC	190- 95
RADF	♦VALG	
BZX29C12	♦PHIC	192-170
RADF	♦VALG	
BZX29C13	♦PHIC	195- 33
RADF	♦VALG	
BZX29C15	♦PHIC	197-185
RADF	♦VALG	
BZX29C16	♦PHIC	199-169
RADF	♦VALG	
BZX29C18	♦PHIC	202- 93
RADF	♦VALG	
BZX29C20	♦PHIC	205- 40
RADF	♦VALG	
BZX29C22	♦PHIC	207- 19
RADF	♦VALG	
BZX29C24	♦PHIC	209- 5
RADF	♦VALG	
BZX29C27	♦PHIC	211- 83
RADF	♦VALG	
BZX29C30	♦PHIC	213- 84
RADF	♦VALG	
BZX29C33	♦PHIC	215- 51
RADF	♦VALG	
BZX29C36	♦PHIC	216-160
RADF	♦VALG	
BZX29C39	♦PHIC	218- 58
RADF	♦VALG	
BZX29C43	♦PHIC	219-134
RADF	♦VALG	
BZX29C47	♦PHIC	221- 74
RADF	♦VALG	
BZX29C51	♦PHIC	223- 24
RADF	♦VALG	
BZX29C56	♦PHIC	224-102
RADF	♦VALG	
BZX46C4V7	ESMF	170- 94
	MISI	
BZX46C5V1	♦ESMF	171-140
	♦MISI	
BZX46C5V6	♦ESMF	172-180
	MISI	
BZX46C6V2	♦ESMF	174-171
	MISI	
BZX46C6V8	♦ESMF	177- 39
	MISI	

TYPE No.	MFRS	Pg&Line
BZX46C7V5	♦ESMF	179- 92
	MISI	
BZX46C8V2	♦ESMF	181-147
	MISI	
BZX46C9V1	♦ESMF	185- 72
	MISI	
BZX46C10	♦ESMF	187-140
	MISI	
BZX46C11	♦ESMF	189-176
	MISI	
BZX46C12	♦ESMF	192- 20
	MISI	
BZX46C13	♦ESMF	194-104
	MISI	
BZX46C15	♦ESMF	197- 51
	MISI	
BZX46C16	♦ESMF	199- 54
	MISI	
BZX46C18	♦ESMF	201-135
	MISI	
BZX46C20	♦ESMF	204-107
	MISI	
BZX46C22	♦ESMF	206- 76
	MISI	
BZX46C24	♦ESMF	208- 74
	MISI	
BZX46C27	ESMF	210-135
	MISI	
BZX46C30	ESMF	212-176
	MISI	
BZX46C33	ESMF	214-125
	MISI	
BZX47	PHIC	176-122
BZX48	♦MULB	176-123
♦PHIC	♦RADF	
	♦VALG	
BZX49	♦MULB	176-124
♦PHIC	♦RADF	
	♦VALG	
BZX50	♦MULB	176-125
♦PHIC	♦RADF	
	♦VALG	
BZX51	TFKG	183-129
BZX52	TFKG	183-130
BZX53	TFKG	183-131
BZX54	TFKG	183-132
BZX55C0V8	SHWG	165- 37
BZX55C2V7	♦NPC	166- 29
BZX55C3V0	♦NPC	166-103
BZX55C3V3	♦NPC	166-192
BZX55C3V6	♦NPC	167-147
BZX55C3V9	♦NPC	168-100
BZX55C4V3	♦NPC	169-100
BZX55C4V7	♦NPC	170- 95
BZX55C5V1	♦ESMF	171-141
MISI	♦NPC	
BZX55C5V6	♦ESMF	172- 87
MISI	♦NPC	
	SHWG	
BZX55C6V2	♦ESMF	174- 28
MISI	♦NPC	
	SHWG	
BZX55C6V8	♦ESMF	176-184
MISI	♦NPC	
	SHWG	
BZX55C7V5	♦ESMF	179- 26
MISI	♦NPC	
	SHWG	
BZX55C8V2	♦ESMF	181- 73
MISI	♦NPC	
	SHWG	
BZX55C9V1	♦ESMF	184-207
MISI	♦NPC	
	SHWG	
BZX55C10	♦ESMF	187-141
MISI	♦NPC	
BZX55C11	♦ESMF	189-177
MISI	♦NPC	
BZX55C12	♦ESMF	192- 21
MISI	♦NPC	
BZX55C13	♦ESMF	194-105
MISI	♦NPC	
BZX55C15	♦ESMF	197- 52
MISI	♦NPC	
BZX55C16	♦ESMF	199- 55
MISI	♦NPC	
BZX55C18	♦ESMF	201-136
MISI	♦NPC	
BZX55C20	♦ESMF	204-108
MISI	♦NPC	
BZX55C22	♦NPC	206- 77
BZX55C24	♦ESMF	208- 75
MISI	♦NPC	
BZX55C27	♦ESMF	210-136
MISI	♦NPC	
BZX55C30	♦ESMF	212-177
MISI	♦NPC	
BZX55C33	♦ESMF	214-126
MISI	♦NPC	
BZX55D5V6	SHWG	172- 88
BZX55D6V8	SHWG	176-185
BZX55D8V2	SHWG	181- 74
BZX55D10	SHWG	187- 57
BZX61C6V8	APX	177-171
♦MULB	♦VALG	
BZX61C7V5	APX	180- 43
♦MULB	♦PHIC	
RADF	♦VALG	
BZX61C8V2	APX	182- 90
♦MULB	♦PHIC	
RADF	♦VALG	
BZX61C9V1	APX	186- 23
♦MULB	♦PHIC	
RADF	♦VALG	

TYPE No.	MFRS	Pg&Line
BZX61C10	APX	188-102
♦MULB	♦PHIC	
RADF	♦VALG	
BZX61C11	APX	190- 96
♦MULB	♦PHIC	
RADF	♦VALG	
BZX61C12	APX	192-171
♦MULB	♦PHIC	
RADF	♦VALG	
BZX61C13	APX	195- 34
♦MULB	♦PHIC	
RADF	♦VALG	
BZX61C15	APX	198- 1
♦MULB	♦PHIC	
RADF	♦VALG	
BZX61C16	APX	199-170
♦MULB	♦PHIC	
RADF	♦VALG	
BZX61C18	APX	202- 94
♦MULB	♦PHIC	
RADF	♦VALG	
BZX61C20	APX	205- 41
♦MULB	♦PHIC	
RADF	♦VALG	
BZX61C22	APX	207- 20
♦MULB	♦PHIC	
RADF	♦VALG	
BZX61C24	APX	209- 6
♦MULB	♦PHIC	
RADF	♦VALG	
BZX61C27	APX	211- 84
♦MULB	♦PHIC	
RADF	♦VALG	
BZX61C30	APX	213- 85
♦MULB	♦PHIC	
RADF	♦VALG	
BZX61C33	APX	215- 52
♦MULB	♦PHIC	
RADF	♦VALG	
BZX61C36	APX	216-161
♦MULB	♦PHIC	
RADF	♦VALG	
BZX61C39	APX	218- 59
♦MULB	♦PHIC	
RADF	♦VALG	
BZX61C43	APX	219-135
♦MULB	♦PHIC	
RADF	♦VALG	
BZX61C47	APX	221- 75
♦MULB	♦PHIC	
RADF	♦VALG	
BZX61C51	APX	223- 25
♦MULB	♦PHIC	
RADF	♦VALG	
BZX61C56	APX	224-103
♦MULB	♦PHIC	
RADF	♦VALG	
BZX61C62	APX	226- 55
♦MULB	♦PHIC	
RADF	♦VALG	
BZX61C68	APX	227-111
♦MULB	♦PHIC	
RADF	♦VALG	
BZX61C75	APX	229- 27
♦MULB	♦PHIC	
RADF	♦VALG	
BZX67C12	♦TFKG	193- 40
BZX67C13	♦TFKG	195- 73
BZX67C15	♦TFKG	198- 44
BZX67C16	♦TFKG	200- 22
BZX67C18	♦TFKG	202-136
BZX67C20	♦TFKG	205- 75
BZX67C22	♦TFKG	207- 60
BZX67C24	♦TFKG	209- 40
BZX67C27	♦TFKG	211-124
BZX67C30	♦TFKG	213-121
BZX67C33	♦TFKG	215- 88
BZX67C36	♦TFKG	217- 1
BZX67C39	♦TFKG	218- 81
BZX67C43	♦TFKG	219-157
BZX67C47	♦TFKG	221- 99
BZX67C51	♦TFKG	223- 46
BZX67C56	♦TFKG	224-131
BZX67C62	♦TFKG	226- 77
BZX67C68	♦TFKG	227-136
BZX67C75	♦TFKG	229- 51
BZX67C82	♦TFKG	230-130
BZX67C91	♦TFKG	232- 65
BZX70C7V5	♦MULB	180-116
BZX70C8V2	♦MULB	182-169
BZX70C9V1	♦MULB	186- 99
BZX70C10	APX	188-189
♦MINA	♦MULB	
♦PHIC	♦VALG	
BZX70C11	APX	190-176
♦MINA	♦MULB	
♦PHIC	♦VALG	
BZX70C12	APX	193- 82
♦MINA	♦MULB	
♦PHIC	♦VALG	
BZX70C13	APX	195-200
♦MINA	♦MULB	
♦PHIC	♦VALG	
BZX70C15	APX	196-170
♦MINA	♦MULB	
♦PHIC	♦VALG	
BZX70C16	APX	200-144
♦MINA	♦MULB	
♦PHIC	♦VALG	
BZX70C18	APX	202-174
♦MINA	♦MULB	
♦PHIC	♦VALG	
BZX70C20	APX	205-114

cont next page

△-Registered with JEDEC by this manufacturer

♦-Copy of mfr's data sheet may be ordered from D.A.T.A.

1. TYPE No. CROSS INDEX

IN TYPE NUMBER SEQUENCE

TYPE No.	MFRS	Pg&Line
BZX70C20		
(cont)	♦ MINA	
♦ MULB	♦ PHIC	
	♦ VALG	
BZX70C22	APX	207 - 99
♦ MINA	♦ MULB	
♦ PHIC	♦ VALG	
BZX70C24	APX	209-170
♦ MINA	♦ MULB	
♦ PHIC	♦ VALG	
BZX70C27	APX	211-165
♦ MINA	♦ MULB	
♦ PHIC	♦ VALG	
BZX70C30	APX	213-160
♦ MINA	♦ MULB	
♦ PHIC	♦ VALG	
BZX70C33	APX	215-128
♦ MINA	♦ MULB	
♦ PHIC	♦ VALG	
BZX70C36	APX	217 - 24
♦ MINA	♦ MULB	
♦ PHIC	♦ VALG	
BZX70C39	APX	218-105
♦ MINA	♦ MULB	
♦ PHIC	♦ VALG	
BZX70C43	APX	219 - 41
♦ MINA	♦ MULB	
♦ PHIC	♦ VALG	
BZX70C47	APX	221-127
♦ MINA	♦ MULB	
♦ PHIC	♦ VALG	
BZX70C51	APX	223 - 70
♦ MINA	♦ MULB	
♦ PHIC	♦ VALG	
BZX70C56	APX	225 - 76
♦ MINA	♦ MULB	
♦ PHIC	♦ VALG	
BZX70C62	APX	226-101
♦ MINA	♦ MULB	
♦ PHIC	♦ VALG	
BZX70C68	APX	227-162
♦ MINA	♦ MULB	
♦ PHIC	♦ VALG	
BZX70C75	APX	229 - 75
♦ MINA	♦ MULB	
♦ PHIC	♦ VALG	
BZX71B5V1	TFKG	171-142
BZX71B5V6	TFKG	172-181
BZX71B6V2	TFKG	174-172
BZX71B6V8	TFKG	177 - 40
BZX71B7V5	TFKG	179 - 93
BZX71B8V2	TFKG	181-148
BZX71B9V1	TFKG	185 - 73
BZX71B10	TFKG	187-142
BZX71B11	TFKG	189-178
BZX71B12	TFKG	192 - 22
BZX71B13	TFKG	194-106
BZX71B15	TFKG	197 - 53
BZX71B16	TFKG	199 - 56
BZX71B18	TFKG	201-137
BZX71B20	TFKG	204-109
BZX71B22	TFKG	206 - 78
BZX71B24	TFKG	208 - 76
BZX71C5V1	♦ TFKG	171-143
BZX71C5V6	♦ TFKG	172-182
BZX71C6V2	♦ TFKG	174-173
BZX71C6V8	♦ TFKG	177 - 41
BZX71C7V5	♦ TFKG	179 - 94
BZX71C8V2	♦ TFKG	181-149
BZX71C9V1	♦ TFKG	185 - 74
BZX71C10	♦ TFKG	187-143
BZX71C11	♦ TFKG	189-179
BZX71C12	♦ TFKG	192 - 23
BZX71C13	♦ TFKG	194-107
BZX71C15	♦ TFKG	197 - 54
BZX71C16	♦ TFKG	199 - 57
BZX71C18	♦ TFKG	201-138
BZX71C20	♦ TFKG	204-110
BZX71C22	♦ TFKG	206 - 79
BZX71C24	♦ TFKG	208 - 77
BZX72	♦ FERB	184 - 94
BZX72A	♦ FERB	184 - 95
BZX72B	♦ FERB	184 - 96
BZX72C	♦ FERB	184 - 97
BZX74C5V6	SOIF	172-183
BZX74C6V2	SOIF	174-174
BZX74C6V8	SOIF	177 - 42
BZX74C7V5	SOIF	179 - 95
BZX74C8V2	SOIF	181-150
BZX74C9V1	SOIF	185 - 75
BZX74C10	SOIF	187-144
BZX74C11	SOIF	189-180
BZX74C12	SOIF	192 - 24
BZX75C1V4	APD	165 - 64
APX	♦ PHIC	
	♦ VALG	
BZX75C2V1	APD	165-127
APX	♦ PHIC	
	♦ VALG	
BZX75C2V8	APD	166 - 69
APX	♦ PHIC	
	♦ VALG	
BZX75C3V6	APD	167-148
APX	♦ PHIC	
	♦ VALG	
BZX79C4V7	♦ MULB	170 - 96
♦ PHIC	♦ VALG	
BZX79C5V1	APX	171-144
♦ MULB	♦ PHIC	
	♦ VALG	
BZX79C5V6	APX	172-184
♦ MULB	♦ PHIC	
	♦ VALG	

TYPE No	MFRS	Pg&Line
BZX79C6V2	APX	174-175
♦ MULB	♦ PHIC	
	♦ VALG	
BZX79C6V8	APX	177 - 43
♦ MULB	♦ PHIC	
	♦ VALG	
BZX79C7V5	APX	179 - 96
♦ MULB	♦ PHIC	
	♦ VALG	
BZX79C8V2	APX	181-151
♦ MULB	♦ PHIC	
	♦ VALG	
BZX79C9V1	APX	185 - 76
♦ MULB	♦ PHIC	
	♦ VALG	
BZX79C10	APX	187-145
♦ MULB	♦ PHIC	
	♦ VALG	
BZX79C11	APX	189-181
♦ MULB	♦ PHIC	
	♦ VALG	
BZX79C12	APX	192 - 25
♦ MULB	♦ PHIC	
	♦ VALG	
BZX79C13	APX	194-108
♦ MULB	♦ PHIC	
	♦ VALG	
BZX79C15	APX	197 - 55
♦ MULB	♦ PHIC	
	♦ VALG	
BZX79C16	APX	199 - 58
♦ MULB	♦ PHIC	
	♦ VALG	
BZX79C18	APX	201-139
♦ MULB	♦ PHIC	
	♦ VALG	
BZX79C20	APX	204-111
♦ MULB	♦ PHIC	
	♦ VALG	
BZX79C22	APX	206 - 80
♦ MULB	♦ PHIC	
	♦ VALG	
BZX79C24	APX	208 - 78
♦ MULB	♦ PHIC	
	♦ VALG	
BZX79C27	APX	210-137
♦ MULB	♦ PHIC	
	♦ VALG	
BZX79C30	APX	212-178
♦ MULB	♦ PHIC	
	♦ VALG	
BZX79C33	APX	214-127
♦ MULB	♦ PHIC	
	♦ VALG	
BZX79C36	APX	216 - 77
♦ MULB	♦ PHIC	
	♦ VALG	
BZX79C39	APX	217-151
♦ MULB	♦ PHIC	
	♦ VALG	
BZX79C43	APX	219 - 56
♦ MULB	♦ PHIC	
	♦ VALG	
BZX79C47	APX	220-178
♦ MULB	♦ PHIC	
	♦ VALG	
BZX79C51	APX	222-133
♦ MULB	♦ PHIC	
	♦ VALG	
BZX79C56	APX	224 - 25
♦ MULB	♦ PHIC	
	♦ VALG	
BZX79C62	APX	225-164
♦ MULB	♦ PHIC	
	♦ VALG	
BZX79C68	APX	227 - 34
♦ MULB	♦ PHIC	
	♦ VALG	
BZX79C75	APX	228-134
♦ MULB	♦ PHIC	
	♦ VALG	
BZX83C4V7	ESMF	170 - 97
	MISI	
BZX83C5V1	♦ ESMF	171-145
	MISI	
BZX83C5V6	♦ ESMF	172-185
	MISI	
BZX83C6V2	♦ ESMF	174-176
	MISI	
BZX83C6V8	♦ ESMF	177 - 44
	MISI	
BZX83C7V5	♦ ESMF	179 - 97
	MISI	
BZX83C8V2	♦ ESMF	181-152
	MISI	
BZX83C9V1	♦ ESMF	185 - 77
	MISI	
BZX83C10	♦ ESMF	187-146
	MISI	
BZX83C11	♦ ESMF	189-182
	MISI	
BZX83C12	♦ ESMF	192 - 26
	MISI	
BZX83C13	♦ ESMF	194-109
	MISI	
BZX83C15	♦ ESMF	197 - 56
	MISI	
BZX83C16	♦ ESMF	199 - 59
	MISI	
BZX83C18	♦ ESMF	201-140
	MISI	
BZX83C20	♦ ESMF	204-112
	MISI	

TYPE No.	MFRS	Pg&Line
BZX83C22	♦ ESMF	206 - 81
	MISI	
BZX83C24	♦ ESMF	208 - 79
	MISI	
BZX83C27	ESMF	210-138
	MISI	
BZX83C30	ESMF	212-179
	MISI	
BZX83C33	ESMF	214-128
	MISI	
BZX84C4V7	♦ PHIC	170 - 38
BZX84C5V1	♦ PHIC	171 - 88
BZX84C5V6	♦ PHIC	172 - 95
BZX84C6V2	♦ PHIC	174 - 66
BZX84C6V8	♦ PHIC	176-190
BZX84C7V5	♦ PHIC	179 - 32
BZX84C8V2	♦ PHIC	181 - 79
BZX84C9V1	♦ PHIC	184-213
BZX84C10	♦ PHIC	187 - 69
BZX84C11	♦ PHIC	189-126
BZX84C12	♦ PHIC	191-154
BZX85C3V3	♦ NPC	167 - 53
BZX85C3V6	♦ NPC	168 - 11
BZX85C3V9	♦ NPC	168-161
BZX85C4V3	♦ NPC	169-160
BZX85C4V7	ESMF	170-166
MISI	♦ NPC	
BZX85C5V1	♦ ESMF	172 - 9
MISI	♦ NPC	
BZX85C5V6	♦ ESMF	173 - 76
MISI	♦ NPC	
BZX85C6V2	♦ ESMF	175 - 51
MISI	♦ NPC	
BZX85C6V8	♦ ESMF	177-172
MISI	♦ NPC	
BZX85C7V5	♦ ESMF	180 - 44
MISI	♦ NPC	
BZX85C8V2	♦ ESMF	182 - 91
MISI	♦ NPC	
BZX85C9V1	♦ ESMF	186 - 24
MISI	♦ NPC	
BZX85C10	♦ ESMF	188-103
MISI	♦ NPC	
BZX85C11	♦ ESMF	190 - 97
MISI	♦ NPC	
BZX85C12	♦ ESMF	192-172
MISI	♦ NPC	
BZX85C13	♦ ESMF	195 - 35
MISI	♦ NPC	
BZX85C15	♦ ESMF	198 - 2
MISI	♦ NPC	
BZX85C16	♦ ESMF	199-171
MISI	♦ NPC	
BZX85C18	♦ ESMF	202 - 95
MISI	♦ NPC	
BZX85C20	♦ ESMF	205 - 42
MISI	♦ NPC	
BZX85C22	♦ ESMF	207 - 21
MISI	♦ NPC	
BZX85C24	♦ ESMF	209 - 7
MISI	♦ NPC	
BZX85C27	ESMF	211 - 85
MISI	♦ NPC	
BZX85C30	ESMF	213 - 86
MISI	♦ NPC	
BZX85C33	ESMF	215 - 53
MISI	♦ NPC	
BZY22	INTG	183-117
BZY23	INTG	183-118
BZY24	INTG	183-119
BZY25	INTG	183-120
BZY56	♦ PHIC	170 - 68
	PHIN	
BZY57	♦ PHIC	171-113
	PHIN	
BZY58	♦ PHIC	172-133
	PHIN	
BZY59	♦ PHIC	174-129
	PHIN	
BZY60	♦ PHIC	177 - 13
	PHIN	
BZY61	♦ PHIC	179 - 64
	PHIN	
BZY62	♦ PHIC	181-119
	PHIN	
BZY63	♦ PHIC	185 - 44
	PHIN	
BZY64	PHIN	169 - 76
BZY65	PHIN	171-114
BZY66	PHIN	174-130
BZY67	PHIN	179 - 65
BZY68	PHIN	185 - 45
BZY69	PHIN	191-198
BZY74	PHIN	175 - 82
BZY75	PHIN	180 - 95
BZY76	PHIN	186-184
BZY78	♦ MULB	172 - 69
♦ PHIC	RADF	
	♦ VALG	
BZY78P	♦ MULB	172 - 70
BZY83C4V7	SHWG	170 - 53
BZY83C5V1	SHWG	171 - 99
BZY83C5V6	SHWG	172-117
BZY83C6V2	APD	174-108
	SHWG	
BZY83C6V8	APD	176-215
	SHWG	
BZY83C7V5	APD	179 - 49
	SHWG	
BZY83C8V2	APD	181-104
	SHWG	
BZY83C9V1	APD	185 - 30
	SHWG	

TYPE No.	MFRS	Pg&Line
BZY83C10	APD	187 - 97
	SHWG	
BZY83C11	APD	189-143
	SHWG	
BZY83C12	APD	191-179
	SHWG	
BZY83C13V5	APD	196 - 1
	SHWG	
BZY83C15	APD	197 - 17
	SHWG	
BZY83C16V5	APD	200-146
	SHWG	
BZY83C18	APD	201-102
	SHWG	
BZY83C20	APD	204 - 81
	SHWG	
BZY83C22	APD	206 - 48
	SHWG	
BZY83C24V5	APD	209-172
	SHWG	
BZY83D1	SHWG	165 - 28
BZY83D4V7	SHWG	170 - 54
BZY83D5V6	SHWG	172 - 89
BZY83D6V8	SHWG	176-216
BZY83D8V2	SHWG	181-105
BZY83D10	APD	187 - 98
	SHWG	
BZY83D12	SHWG	191-180
BZY83D15	SHWG	197 - 18
BZY83D18	SHWG	201-103
BZY83D22	SHWG	206 - 49
BZY84D1	SHWG	165 - 38
BZY84D5V6	SHWG	172 - 90
BZY84D6V8	SHWG	176-186
BZY84D8V2	SHWG	181 - 75
BZY84D10	SHWG	187 - 58
BZY84D12	SHWG	191-149
BZY85B2V7	TFKG	166 - 30
BZY85B3	TFKG	166-104
BZY85B3V3	TFKG	166-193
BZY85B3V6	TFKG	167-149
BZY85B3V9	TFKG	168-101
BZY85B4V3	TFKG	169-101
BZY85B4V7	TFKG	170 - 98
BZY85B5V1	TFKG	171-146
BZY85B5V6	TFKG	172-186
BZY85B6V2	TFKG	174-177
BZY85B6V8	TFKG	177 - 45
BZY85B7V5	TFKG	179 - 98
BZY85B8V2	TFKG	181-153
BZY85B9V1	TFKG	185 - 78
BZY85B10	TFKG	187-147
BZY85B11	TFKG	189-183
BZY85B12	TFKG	192 - 27
BZY85B13	TFKG	194-110
BZY85B15	TFKG	197 - 57
BZY85B16	TFKG	199 - 60
BZY85B18	TFKG	201-141
BZY85B20	TFKG	204-113
BZY85B22	TFKG	206 - 82
BZY85B24	TFKG	208 - 80
BZY85B27	TFKG	210-139
BZY85B30	TFKG	212-180
BZY85B33	TFKG	214-129
BZY85C2V7	TFKG	166 - 15
BZY85C3	TFKG	166 - 83
BZY85C3V3	TFKG	166-160
BZY85C3V6	TFKG	167-117
BZY85C3V9	TFKG	168 - 69
BZY85C4V3	TFKG	169 - 64
BZY85C4V7	SHWG	170 - 55
	♦ TFKG	
BZY85C5V1	SHWG	171-100
	♦ TFKG	
BZY85C5V6	SHWG	172-118
	♦ TFKG	
BZY85C6V2	SHWG	174-109
	♦ TFKG	
BZY85C6V8	APD	176-217
SHWG	♦ TFKG	
BZY85C7V5	APD	179 - 50
SHWG	♦ TFKG	
BZY85C8V2	SHWG	181-106
	♦ TFKG	
BZY85C9V1	APD	185 - 31
SHWG	♦ TFKG	
BZY85C10	APD	187 - 99
SHWG	♦ TFKG	
BZY85C11	APD	189-144
SHWG	♦ TFKG	
BZY85C12	APD	191-181
SHWG	♦ TFKG	
BZY85C13	♦ TFKG	245 - 69
BZY85C13V5	APD	194 - 75
	SHWG	
BZY85C[illegible]	SHWG	197 - 19
	♦ TFKG	
BZY85C16	♦ TFKG	200-142
BZY85C16V5	APD	199 - 26
	SHWG	
BZY85C18	APD	201-104
SHWG	♦ TFKG	
BZY85C20	APD	204 - 82
SHWG	♦ TFKG	
BZY85C22	APD	206 - 50
SHWG	TFKG	
BZY85C24	TFKG	208 - 54
BZY85C24V5	APD	208 - 51
	SHWG	
BZY85C27	TFKG	210-119
BZY85C30	TFKG	212-156
BZY85C33	TFKG	214-106
BZY85D1	SHWG	165 - 41

TYPE No.	MFRS	Pg&Line
BZY85D4V7	SHWG	170 - 99
	♦ TFKG	
BZY85D5V6	SHWG	172-187
	♦ TFKG	
BZY85D6V8	SHWG	177 - 46
	♦ TFKG	
BZY85D8V2	APD	181-154
SHWG	♦ TFKG	
BZY85D10	SHWG	187-148
	♦ TFKG	
BZY85D12	SHWG	192 - 28
	♦ TFKG	
BZY85D15	SHWG	197 - 58
	♦ TFKG	
BZY85D18	SHWG	201-142
	♦ TFKG	
BZY85D22	SHWG	206 - 83
	♦ TFKG	
BZY88C3V3	MINA	166-194
♦ MULB	♦ PHIC	
♦ RADF	♦ VALG	
BZY88C3V6	MINA	167-150
♦ MULB	♦ PHIC	
♦ RADF	♦ VALG	
BZY88C3V9	MINA	168-102
♦ MULB	♦ PHIC	
♦ RADF	♦ VALG	
BZY88C4V3	MINA	169-102
♦ MULB	♦ PHIC	
♦ RADF	♦ VALG	
BZY88C4V7	MINA	170-100
♦ MULB	♦ PHIC	
PHIN	RADF	
	♦ VALG	
BZY88C5V1	MINA	171-147
♦ MULB	♦ PHIC	
PHIN	RADF	
	♦ VALG	
BZY88C5V6	MINA	172-188
♦ MULB	♦ PHIC	
PHIN	RADF	
	♦ VALG	
BZY88C6V2	MINA	174-178
♦ MULB	♦ PHIC	
PHIN	RADF	
	♦ VALG	
BZY88C6V8	APD	177 - 47
MINA	♦ MULB	
♦ PHIC	PHIN	
RADF	♦ VALG	
BZY88C7V5	APD	179 - 99
MINA	♦ MULB	
♦ PHIC	PHIN	
RADF	♦ VALG	
BZY88C8V2	APD	181-155
MINA	♦ MULB	
♦ PHIC	PHIN	
RADF	♦ VALG	
BZY88C9V1	APD	185 - 79
MINA	♦ MULB	
♦ PHIC	PHIN	
RADF	♦ VALG	
BZY88C10	APD	187-149
MINA	♦ MULB	
♦ PHIC	♦ RADF	
	♦ VALG	
BZY88C11	APD	189-184
MINA	♦ MULB	
♦ PHIC	♦ RADF	
	♦ VALG	
BZY88C12	APD	192 - 29
MINA	♦ MULB	
♦ PHIC	♦ RADF	
	♦ VALG	
BZY88C13	APD	194-111
MINA	♦ MULB	
♦ PHIC	♦ RADF	
	♦ VALG	
BZY88C15	APD	197 - 59
MINA	♦ MULB	
♦ PHIC	♦ RADF	
	♦ VALG	
BZY88C16	APD	199 - 61
MINA	♦ MULB	
♦ PHIC	♦ RADF	
	♦ VALG	
BZY88C18	APD	201-143
MINA	♦ MULB	
♦ PHIC	♦ RADF	
	♦ VALG	
BZY88C20	APD	204-114
MINA	♦ MULB	
♦ PHIC	♦ RADF	
	♦ VALG	
BZY88C22	APD	206 - 84
MINA	♦ MULB	
♦ PHIC	♦ RADF	
	♦ VALG	
BZY88C24	APD	208 - 81
MINA	♦ MULB	
♦ PHIC	♦ RADF	
	♦ VALG	
BZY88C27	MINA	210-140
♦ MULB	♦ PHIC	
♦ RADF	♦ VALG	
BZY88C30	MINA	212-181
♦ MULB	♦ PHIC	
♦ RADF	♦ VALG	
BZY91C7V5	♦ MULB	181 - 4
BZY91C8V2	♦ MULB	183 - 70
BZY91C9V1	♦ MULB	186-177
	RADF	
BZY91C10	♦ MULB	189 - 95

cont.next page

Δ-Registered with JEDEC by this manufacturer

♦-Copy of mfr's data sheet may be ordered from D.A.T.A.

1. TYPE No. CROSS INDEX

IN TYPE NUMBER SEQUENCE

TYPE No.	MFRS	Pg&Line
BZY91C10		
(cont.)	PHIC	
	PHIN	
	RADF	
	♦VALG	
BZY91C11	♦MULB	191- 63
	PHIC	
	PHIN	
	RADF	
	♦VALG	
BZY91C12	♦MULB	193-188
	PHIC	
	PHIN	
	RADF	
	♦VALG	
BZY91C13	♦MULB	195-197
	PHIC	
	PHIN	
	RADF	
	♦VALG	
BZY91C15	♦MULB	198-191
	PHIC	
	PHIN	
	RADF	
	♦VALG	
BZY91C16	♦MULB	200-137
	PHIC	
	PHIN	
	RADF	
	♦VALG	
BZY91C18	♦MULB	203- 83
	PHIC	
	PHIN	
	RADF	
	♦VALG	
BZY91C20	♦MULB	206- 8
	PHIC	
	PHIN	
	RADF	
	♦VALG	
BZY91C22	♦MULB	208- 5
	PHIC	
	PHIN	
	RADF	
	♦VALG	
BZY91C24	♦MULB	209-165
	PHIC	
	PHIN	
	RADF	
	♦VALG	
BZY91C27	♦MULB	212- 73
	PHIC	
	PHIN	
	RADF	
	♦VALG	
BZY91C30	♦MULB	214- 66
	PHIC	
	PHIN	
	RADF	
	♦VALG	
BZY91C33	♦MULB	216- 28
	PHIC	
	PHIN	
	RADF	
	♦VALG	
BZY91C36	♦MULB	217-112
	PHIC	
	PHIN	
	RADF	
	♦VALG	
BZY91C39	♦MULB	218-186
	PHIC	
	PHIN	
	RADF	
	♦VALG	
BZY91C43	♦MULB	220- 70
	PHIC	
	PHIN	
	RADF	
	♦VALG	
BZY91C47	♦MULB	222- 24
	PHIC	
	PHIN	
	RADF	
	♦VALG	
BZY91C51	♦MULB	223-140
	PHIC	
	PHIN	
	RADF	
	♦VALG	
BZY91C56	♦MULB	225- 68
	PHIC	
	PHIN	
	RADF	
	♦VALG	
BZY91C62	♦MULB	226-173
	PHIC	
	PHIN	
	RADF	
	♦VALG	
BZY91C68	♦MULB	228- 62
	PHIC	
	PHIN	
	RADF	
	♦VALG	
BZY91C75	♦MULB	229-161
	PHIC	
	PHIN	
	RADF	
	♦VALG	
BZY92C3V9	♦TFKG	168-180
BZY92C4V3	♦TFKG	169-178
BZY92C4V7	♦TFKG	170-186
BZY92C5V1	♦TFKG	172- 28
BZY92C5V6	♦TFKG	173-102
BZY92C6V2	♦TFKG	175- 77
BZY92C6V8	♦TFKG	178- 38
BZY92C7V5	♦TFKG	180- 81
BZY92C8V2	♦TFKG	182-132
BZY92C9V1	♦TFKG	186- 62
BZY92C10	♦TFKG	188-146
BZY92C11	♦TFKG	190-132
BZY92C12	♦TFKG	193- 38
BZY92C13	♦TFKG	195- 71
BZY92C15	♦TFKG	198- 42
BZY92C16	♦TFKG	200- 20
BZY92C18	♦TFKG	202-134
BZY92C20	♦TFKG	205- 73
BZY92C22	♦TFKG	207- 58
BZY92C24	TFKG	209- 38
BZY92C27	TFKG	211-122
BZY92C30	TFKG	213-119
BZY92C33	TFKG	215- 86
BZY92C36	TFKG	216-183
BZY93C6V8	♦MULB	178-142
	PHIC	♦RADF
BZY93C7V5	♦MULB	180-184
♦PHIC	♦RADF	
	♦VALG	
BZY93C8V2	♦MULB	183- 57
♦PHIC	♦RADF	
	♦VALG	
BZY93C9V1	♦MULB	186-167
♦PHIC	♦RADF	
	♦VALG	
BZY93C10	♦MULB	189- 80
♦PHIC	♦RADF	
	♦VALG	
BZY93C11	♦MULB	191- 50
♦PHIC	♦RADF	
	♦VALG	
BZY93C12	♦MULB	193-173
♦PHIC	♦RADF	
	♦VALG	
BZY93C13	♦MULB	195-186
♦PHIC	♦RADF	
	♦VALG	

TYPE No.	MFRS	Pg&Line
BZY93C15	♦MULB	198-175
♦PHIC	♦RADF	
	♦VALG	
BZY93C16	♦MULB	200-127
♦PHIC	♦RADF	
	♦VALG	
BZY93C18	♦MULB	203- 68
♦PHIC	♦RADF	
	♦VALG	
BZY93C20	♦MULB	205-197
♦PHIC	♦RADF	
	♦VALG	
BZY93C22	♦MULB	207-190
♦PHIC	♦RADF	
	♦VALG	
BZY93C24	♦MULB	209-155
♦PHIC	♦RADF	
	♦VALG	
BZY93C27	♦MULB	212- 58
♦PHIC	♦RADF	
	♦VALG	
BZY93C30	♦MULB	214- 54
♦PHIC	♦RADF	
	♦VALG	
BZY93C33	♦MULB	216- 13
♦PHIC	♦RADF	
	♦VALG	
BZY93C36	♦MULB	217-100
♦PHIC	♦RADF	
	♦VALG	
BZY93C39	♦MULB	218-171
♦PHIC	♦RADF	
	♦VALG	
BZY93C43	♦MULB	220- 58
♦PHIC	♦RADF	
	♦VALG	
BZY93C47	♦MULB	222- 9
♦PHIC	♦RADF	
	♦VALG	
BZY93C51	♦MULB	223-128
♦PHIC	♦RADF	
	♦VALG	
BZY93C56	♦MULB	225- 54
♦PHIC	♦RADF	
	♦VALG	
BZY93C62	♦MULB	226-161
♦PHIC	♦RADF	
	♦VALG	
BZY93C68	♦MULB	228- 48
♦PHIC	♦RADF	
	♦VALG	
BZY93C75	♦MULB	229-148
♦PHIC	♦RADF	
	♦VALG	
BZY94C10	♦MULB	187-150
BZY94C11	♦MULB	189-185
BZY94C12	♦MULB	192- 30
BZY94C13	♦MULB	194-112
BZY94C15	♦MULB	197- 60
BZY94C16	♦MULB	199- 62
BZY94C18	♦MULB	201-144
BZY94C20	♦MULB	204-115
BZY94C22	♦MULB	206- 85
BZY94C24	♦MULB	208- 82
BZY94C27	♦MULB	210-141
BZY94C30	♦MULB	212-182
BZY94C33	♦MULB	214-130
BZY94C36	♦MULB	216- 78
BZY94C39	♦MULB	217-152
BZY94C43	♦MULB	219- 57
BZY94C47	♦MULB	220-179
BZY94C51	♦MULB	222-134
BZY94C56	♦MULB	224- 26
BZY94C62	♦MULB	225-165
BZY94C68	♦MULB	227- 35
BZY94C75	♦MULB	228-135
BZY95C10	♦MULB	188-165
♦PHIC	♦RADF	
	♦VALG	
BZY95C11	♦MULB	190-149
♦PHIC	♦RADF	
	♦VALG	
BZY95C12	♦MULB	193- 59
♦PHIC	♦RADF	
	♦VALG	
BZY95C13	♦MULB	195- 88
♦PHIC	♦RADF	
	♦VALG	
BZY95C15	♦MULB	198- 61
♦PHIC	♦RADF	
	♦VALG	
BZY95C16	♦MULB	200- 37
♦PHIC	♦RADF	
	♦VALG	
BZY95C18	♦MULB	202-152
♦PHIC	♦RADF	
	♦VALG	
BZY95C20	♦MULB	205- 92
♦PHIC	♦RADF	
	♦VALG	
BZY95C22	♦MULB	207- 77
♦PHIC	♦RADF	
	♦VALG	
BZY95C24	♦MULB	209- 55
♦PHIC	♦RADF	
	♦VALG	
BZY95C27	♦MULB	211-143
♦PHIC	♦RADF	
	♦VALG	
BZY95C30	♦MULB	213-138
♦PHIC	♦RADF	
	♦VALG	
BZY95C33	♦MULB	215-107
cont next col		

TYPE No.	MFRS	Pg&Line
BZY95C33		
(cont.)	♦PHIC	
♦RADF	♦VALG	
BZY95C36	♦MULB	217- 14
♦PHIC	♦RADF	
	♦VALG	
BZY95C39	♦MULB	218- 95
♦PHIC	♦RADF	
	♦VALG	
BZY95C43	♦MULB	219-172
♦PHIC	♦RADF	
	♦VALG	
BZY95C47	♦MULB	221-117
♦PHIC	♦RADF	
	♦VALG	
BZY95C51	♦MULB	223- 59
♦PHIC	♦RADF	
	♦VALG	
BZY95C56	♦MULB	224-146
♦PHIC	♦RADF	
	♦VALG	
BZY95C62	♦MULB	226- 90
♦PHIC	♦RADF	
	♦VALG	
BZY95C68	♦MULB	227-151
♦PHIC	♦RADF	
	♦VALG	
BZY95C75	♦MULB	229- 64
♦PHIC	♦RADF	
	♦VALG	
BZY96C4V7	♦MULB	170-191
♦PHIC	♦RADF	
	♦VALG	
BZY96C5V1	♦MULB	172- 31
♦PHIC	♦RADF	
	♦VALG	
BZY96C5V6	♦MULB	173-107
♦PHIC	♦RADF	
	♦VALG	
BZY96C6V2	♦MULB	175- 83
♦PHIC	♦RADF	
	♦VALG	
BZY96C6V8	♦MULB	178- 54
♦PHIC	♦RADF	
	♦VALG	
BZY96C7V5	♦MULB	180- 96
♦PHIC	♦RADF	
	♦VALG	
BZY96C8V2	♦MULB	182-149
♦PHIC	♦RADF	
	♦VALG	
BZY96C9V1	♦MULB	186- 78
♦PHIC	♦RADF	
	♦VALG	
BZY96C10	♦MULB	188-166
	PHIC	
BZZ10	MULB	173-197
PHIN	VALG	
BZZ11	MULB	176-129
PHIN	VALG	
BZZ12	MULB	179- 18
PHIN	VALG	
BZZ13	MULB	181- 56
PHIN	VALG	
BZZ14	PHIC	173-121
	PHIN	
BZZ15	PHIC	175- 98
	PHIN	
BZZ16	PHIC	178- 69
	PHIN	
BZZ17	PHIC	180-111
	PHIN	
BZZ18	PHIC	182-164
	PHIN	
BZZ19	PHIC	186- 94
	PHIN	
BZZ20	PHIC	189- 67
	PHIN	
BZZ21	PHIC	191- 47
	PHIN	
BZZ22	PHIC	193-170
	PHIN	
BZZ23	PHIC	195-185
	PHIN	
BZZ24	PHIC	198-172
	PHIN	
BZZ25	PHIC	200-126
	PHIN	
BZZ26	PHIC	203- 65
	PHIN	
BZZ27	PHIC	205-194
	PHIN	
BZZ28	PHIC	207-187
	PHIN	
BZZ29	PHIC	209-154
	PHIN	
C1 0E2	CODI	370- 7
C1 5E2	CODI	384- 62
C1 5E3	CODI	384- 47
C2 0E2	CODI	390- 8
C2 0E3	CODI	389- 99
C2 0E4	CODI	389- 89
C2 5E3	CODI	392- 53
C2 5E4	CODI	392- 46
C2 5E5	CODI	392- 36
C3.0E3	CODI	394- 39
C3 0E4	CODI	394- 29
C3 0E5	CODI	394- 15
C3.0E6	CODI	394- 13
C3.5E4	CODI	395- 73
C3 5E5	CODI	395- 64
C3 5E6	CODI	395- 63
C4 0E4	CODI	397- 13
C4 0E5	CODI	396-109

TYPE No.	MFRS	Pg&Line
C4.0E6	CODI	396-108
C4.5E5	CODI	398- 17
C4.5E6	CODI	398- 15
C5.0E5	CODI	399- 60
C5.0E6	CODI	399- 58
C6A	GESY	424- 34
C6B	GESY	433- 35
C6F	GESY	418- 32
C6G	GESY	430- 65
C6U	GESY	414- 92
C6.0E6	CODI	401- 15
C9A	GESY	424- 8
C9B	GESY	433- 1
C9C	GESY	442- 70
C9F	GESY	418- 15
C9G	GESY	430- 51
C9H	GESY	440- 85
C9U	GESY	414- 81
C12A	GESY	425- 70
C12B	GESY	434- 91
C12C	GESY	443- 69
C12D	GESY	450- 87
C12F	GESY	419- 38
C12G	GESY	430- 87
C12H	GESY	440-107
C12U	GESY	415- 19
C15A	GESY	424- 60
C15B	GESY	433- 66
C15C	GESY	442-103
C15D	GESY	449- 72
C15E	GESY	457- 44
C15F	GESY	418- 51
C15G	GESY	430- 70
C15M	GESY	463- 21
C15U	GESY	414- 99
C20A	GESY	425- 77
	PIR	
C20B	GESY	434-100
	PIR	
C20C	GESY	443- 75
	PIR	
C20D	GESY	450- 96
	PIR	
C20F	GESY	419- 45
	PIR	
C20U	GESY	415- 21
	PIR	
C22A	GESY	425- 78
	PIR	
C22B	GESY	434-101
	PIR	
C22C	GESY	443- 76
	PIR	
C22D	GESY	450- 97
	PIR	
C22F	GESY	419- 46
	PIR	
C22U	GESY	415- 22
	PIR	
C30A	GESY	427- 57
	PIR	
C30B	GESY	436- 97
	PIR	
C30C	GESY	444-110
	PIR	
C30D	GESY	452- 93
	PIR	
C30F	GESY	420- 40
	PIR	
C30U	GESY	415- 60
	PIR	
C31A	GESY	427- 58
C31B	GESY	436- 98
C31C	GESY	445- 1
C31D	GESY	452- 94
C31F	GESY	420- 41
C31U	GESY	415- 61
C32A	GESY	427- 59
	PIR	
C32B	GESY	436- 99
	PIR	
C32C	GESY	445- 2
	PIR	
C32D	GESY	452- 95
	PIR	
C32F	GESY	420- 42
	PIR	
C32U	GESY	415- 62
	PIR	
C33A	GESY	427- 60
C33B	GESY	436-100
C33C	GESY	445- 3
C33D	GESY	452- 96
C33F	GESY	420- 43
C33U	GESY	415- 63
C34A1	♦GESY	427- 61
C34A2	♦GESY	427- 62
C34B1	♦GESY	436-101
C34B2	♦GESY	436-102
C34C1	♦GESY	445- 4
C34C2	♦GESY	445- 5
C34D1	♦GESY	452- 97
C34D2	♦GESY	452- 98
C34E1	♦GESY	459- 54
C34E2	♦GESY	459- 55
C34F1	♦GESY	420- 44
C34F2	♦GESY	420- 45
C35DR700	GESY	448- 73
C35P△	SES	482- 81
C35P⊠	♦NAT	487-106
C35T△	SES	479-103
C35T⊠	♦NAT	482- 80
C36A	GESY	426-107
C36B	GESY	436- 36

TYPE No.	MFRS	Pg&Line
C36C	GESY	444- 66
C36D	GESY	452- 28
C36E	GESY	458-108
C36F	GESY	420- 12
	♦PIR	
C36G	GESY	430-103
C36H	GESY	441- 14
C36M△	♦ESMF	465- 18
GESY	MISI	
	SES	
C36M⊠	♦NAT	473- 63
C36N△	♦ESMF	471- 10
GESY	MISI	
	SES	
C36N⊠	♦NAT	481- 98
C36S△	♦ESMF	475- 4
GESY	MISI	
	SES	
C36S⊠	♦NAT	479- 44
C36U	GESY	415- 49
C37A△	GESY	427- 48
	SES	
C37A⊠	♦NAT	429- 91
C37B△	GESY	436- 88
	SES	
C37B⊠	♦NAT	440- 33
C37C△	GESY	444-103
	SES	
C37C⊠	♦NAT	448- 51
C37D△	GESY	452- 84
	SES	
C37D⊠	♦NAT	456-101
C37E△	GESY	459- 45
	SES	
C37E⊠	♦NAT	465- 96
C37F△	GESY	420- 36
	SES	
C37F⊠	♦NAT	422- 57
C37M△	GESY	465- 95
	SES	
C37M⊠	♦NAT	473- 64
C37N△	GESY	475- 57
	SES	
C37N⊠	♦NAT	481-100
C37S△	GESY	471- 36
	SES	
C37S⊠	♦NAT	479- 45
C37U△	GESY	415- 57
C37U⊠	♦NAT	417- 80
C38A△	GESY	427- 85
	SES	
C38A⊠	NAT	427- 91
C38B△	GESY	437- 16
	SES	
C38B⊠	NAT	437- 22
C38C△	GESY	445- 27
	SES	
C38C⊠	NAT	445- 33
C38D△	GESY	453- 15
	SES	
C38D⊠	NAT	453- 21
C38E△	GESY	459- 80
	SES	
C38E⊠	NAT	459- 87
C38F△	GESY	420- 58
	SES	
C38F⊠	NAT	420- 60
C38G△	GESY	431- 9
	SES	
C38G⊠	NAT	431- 11
C38H△	GESY	441- 29
	SES	
C38H⊠	NAT	441- 31
C38U△	GESY	415- 71
	SES	
C38U⊠	NAT	415- 73
C40A△	♦ESMF	427- 76
GESY	MISI	
	SES	
C40A⊠	♦NAT	429- 92
C40B△	♦ESMF	437- 7
GESY	MISI	
	SES	
C40B⊠	♦NAT	440- 34
C40C△	♦ESMF	445- 18
GESY	MISI	
	SES	
C40C⊠	♦NAT	448- 52
C40D△	♦ESMF	453- 6
GESY	MISI	
	SES	
C40D⊠	♦NAT	456-102
C40E△	♦ESMF	459- 70
GESY	MISI	
	SES	
C40E⊠	♦NAT	466- 24
C40F△	♦ESMF	420- 49
GESY	MISI	
	SES	
C40F⊠	♦NAT	422- 58
C40G△	♦ESMF	431- 4
GESY	MISI	
	SES	
C40G⊠	♦NAT	431- 96
C40H△	♦ESMF	441- 24
GESY	MISI	
	SES	
C40H⊠	♦NAT	445- 28
C40M	♦NAT	473- 65
C40N	♦NAT	481-101
C40S	♦NAT	479- 46
C40U△	♦ESMF	415- 66
GESY	MISI	
	SES	

△-Registered with JEDEC by this manufacturer

♦-Copy of mfr's data sheet may be ordered from D.A.T.A.

1. TYPE No. CROSS INDEX

IN TYPE NUMBER SEQUENCE

TYPE No	MFRS	Pg&Line
C40U⊠	♦NAT	417- 82
C45A△	GESY	428- 11
	SES	
C45A⊠	♦NAT	429- 93
C45B△	GESY	437- 71
	SES	
C45B⊠	♦NAT	440- 35
C45C△	GESY	445- 76
	SES	
C45C⊠	♦NAT	448- 53
C45D△	GESY	453- 77
	SES	
C45D⊠	♦NAT	456-103
C45E△	GESY	460- 11
	SES	
C45E⊠	♦NAT	466- 84
C45F△	GESY	420- 76
	SES	
C45F⊠	♦NAT	422- 59
C45G△	GESY	431- 22
	SES	
C45G⊠	♦NAT	431- 97
C45H△	GESY	441- 41
	SES	
C45H⊠	♦NAT	445- 78
C45M△	GESY	466- 82
	SES	
C45M⊠	♦NAT	473- 66
C45N△	GESY	476- 21
	SES	
C45N⊠	♦NAT	481-102
C45S△	GESY	471- 85
	SES	
C45S⊠	♦NAT	479- 47
C45T△	♦GESY	480- 22
	SES	
C45T⊠	♦NAT	483- 4
C45U△	GESY	415- 79
	SES	
C45U⊠	♦NAT	417- 83
C46A△	GESY	428- 12
	SES	
C46A⊠	♦NAT	429- 94
C46B△	GESY	437- 72
	SES	
C46B⊠	♦NAT	440- 36
C46C△	GESY	445- 77
	SES	
C46C⊠	♦NAT	448- 54
C46D△	GESY	453- 78
	SES	
C46D⊠	♦NAT	456-104
C46E△	GESY	460- 12
	SES	
C46E⊠	♦NAT	466- 85
C46F△	GESY	420- 77
	SES	
C46F⊠	♦NAT	422- 60
C46G△	GESY	431- 23
	SES	
C46G⊠	♦NAT	431- 98
C46H△	GESY	441- 42
	SES	
C46H⊠	♦NAT	445- 79
C46M△	GESY	466- 83
	SES	
C46M⊠	♦NAT	473- 67
C46N△	GESY	476- 22
	SES	
C46N⊠	♦NAT	481-103
C46S△	GESY	471- 86
	SES	
C46S⊠	♦NAT	479- 48
C46T△	♦GESY	480- 23
	SES	
C46T⊠	♦NAT	483- 5
C46U△	GESY	415- 80
	SES	
C46U⊠	♦NAT	417- 84
C50E	GESY	460- 90
C50M	GESY	467-102
C50N△	GESY	477- 12
	SES	
C50N⊠	♦NAT	481-108
C50S	GESY	472- 39
C50T△	GESY	480- 80
	SES	
C50T⊠	♦NAT	483- 92
C52E	GESY	460- 91
C52M	GESY	467-103
C52N	GESY	477- 13
C52S	GESY	472- 40
C52T	GESY	480- 81
C52U△	GESY	415- 95
	SES	
C52U⊠	♦NAT	417- 88
C55A△	SES	428- 63
C55A⊠	♦NAT	429- 98
C55B△	SES	438- 44
C55B⊠	♦NAT	440- 42
C55C△	SES	446- 45
C55C⊠	♦NAT	448- 60
C55D△	SES	454- 67
C55D⊠	♦NAT	456-110
C55E△	SES	460- 92
C55E⊠	♦NAT	467-104
C55F△	SES	420-110
C55F⊠	♦NAT	422- 64
C55G△	SES	431- 56
C55G⊠	♦NAT	431-102
C55H△	SES	441- 77
C55H⊠	♦NAT	446- 46
C55M△	SES	467-105
C55M⊠	♦NAT	473- 73

TYPE No	MFRS	Pg&Line
C55U△	SES	415- 96
C55U⊠	♦NAT	417- 86
C56A△	SES	428- 64
C56A⊠	♦NAT	429- 99
C56B△	SES	438- 45
C56B⊠	♦NAT	440- 43
C56C△	SES	446- 47
C56C⊠	♦NAT	448- 61
C56D△	SES	454- 68
C56D⊠	♦NAT	457- 1
C56E△	SES	460- 93
C56E⊠	♦NAT	467-106
C56F△	SES	421- 1
C56F⊠	♦NAT	422- 65
C56G△	SES	431- 57
C56G⊠	♦NAT	431-103
C56H△	SES	441- 78
C56H⊠	♦NAT	446- 48
C56M△	SES	467-107
C56M⊠	♦NAT	473- 74
C56U△	SES	415- 97
C56U⊠	♦NAT	417- 87
C60A	NAT	428- 83
C60B	NAT	438- 76
C60C	NAT	446- 71
C60D	NAT	454- 99
C60E△	GESY	461- 15
	SES	
C60E⊠	NAT	461- 24
C60F	NAT	421- 13
C60G	NAT	431- 67
C60H	NAT	441- 88
C60U	NAT	415-105
C62A△	GESY	428- 82
	SES	
C62A⊠	NAT	428- 84
C62B△	GESY	438- 71
	SES	
C62B⊠	NAT	438- 77
C62C△	GESY	446- 66
	SES	
C62C⊠	NAT	446- 72
C62D△	GESY	454- 94
	SES	
C62D⊠	NAT	454-100
C62E△	GESY	461- 16
	SES	
C62E⊠	NAT	460- 77
C62F△	GESY	421- 12
	SES	
C62F⊠	NAT	421- 14
C62G△	GESY	431- 66
	SES	
C62G⊠	NAT	431- 68
C62H△	GESY	441- 87
	SES	
C62H⊠	NAT	441- 89
C62U△	GESY	415-104
	SES	
C62U⊠	NAT	415-106
C103A	♦GESY	423- 84
C103B	♦GESY	432- 75
C103Q	GESY	414- 42
C103Y	♦GESY	416- 79
C103YY	♦GESY	422- 18
C106A1	♦GESY	424- 76
C106A2	♦GESY	424- 53
C106A3	♦GESY	424- 77
C106A4	♦GESY	424- 54
C106A	♦PIR	424- 74
C106B1	♦GESY	433- 87
C106B2	♦GESY	433- 53
C106B3	♦GESY	433- 88
C106B4	♦GESY	433- 54
C106B	♦PIR	433- 85
C106C1	♦GESY	442-108
C106C2	♦GESY	442- 96
C106C3	♦GESY	442-109
C106C4	♦GESY	442- 97
C106D1	♦GESY	449- 88
C106D2	♦GESY	449- 59
C106D3	♦GESY	449- 89
C106D4	♦GESY	449- 60
C106F1	♦GESY	418- 65
C106F2	♦GESY	418- 45
C106F3	♦GESY	418- 66
C106F4	♦GESY	418- 46
C106F	♦PIR	418- 64
C106Q1	♦GESY	414- 64
C106Q2	♦GESY	414- 60
C106Q3	♦GESY	414- 65
C106Q4	♦GESY	414- 61
C106Q	♦PIR	414- 63
C106Y1	♦GESY	417- 20
C106Y2	♦GESY	417- 7
C106Y3	♦GESY	417- 21
C106Y4	♦GESY	417- 8
C106Y	♦PIR	417- 18
C107A1	♦GESY	423- 82
C107A2	♦GESY	423- 53
C107A3	♦GESY	423- 83
C107A4	♦GESY	423- 54
C107B1	♦GESY	432- 73
C107B2	♦GESY	432- 55
C107B3	♦GESY	432- 74
C107B4	♦GESY	432- 56
C107C1	♦GESY	442- 49
C107C2	♦GESY	442- 37
C107C3	♦GESY	442- 50
C107C4	♦GESY	442- 38
C107D1	♦GESY	448-102
C107D2	♦GESY	448- 91
C107D3	♦GESY	448-103
C107D4	♦GESY	448- 92

TYPE No.	MFRS	Pg&Line
C107F1	♦GESY	417-109
C107F2	♦GESY	417-102
C107F3	♦GESY	417-110
C107F4	♦GESY	417-103
C107Q1	♦GESY	414- 40
C107Q2	♦GESY	414- 31
C107Q3	♦GESY	414- 41
C107Q4	♦GESY	414- 32
C107Y1	♦GESY	416- 77
C107Y2	♦GESY	416- 58
C107Y3	♦GESY	416- 78
C107Y4	♦GESY	416- 59
C122B	♦GESY	435- 6
C122D	♦GESY	451- 2
C122F	♦GESY	419- 50
C137E	♦GESY	459- 71
C137M	♦GESY	466- 12
C137N	♦GESY	475- 77
C137P	♦GESY	482- 75
C137PB	♦GESY	487-103
C138E10E	GESY	459- 19
C138E20E	GESY	459- 20
C138M10M	GESY	465- 58
C138M20M	GESY	465- 59
C138N10M	GESY	475- 32
C138N20M	GESY	475- 33
C138S10M	GESY	471- 25
C138S20M	GESY	471- 26
C139E10E	GESY	459- 21
C139E20E	GESY	459- 22
C139M10M	GESY	465- 60
C139M20M	GESY	465- 61
C139N10M	GESY	475- 34
C139N20M	GESY	475- 35
C139S10M	GESY	471- 27
C139S20M	GESY	471- 28
C144E15E	GESY	459- 82
C144E30E	GESY	459- 83
C144M15M	GESY	466- 26
C144M30M	GESY	466- 27
C144N15M	GESY	475- 84
C144N30M	GESY	475- 85
C144S15M	GESY	471- 57
C144S30M	GESY	471- 58
C145A	GESY	428- 5
C145B	GESY	437- 61
C145C	GESY	445- 65
C145D	GESY	453- 67
C145E	♦GESY	460- 18
C145F	GESY	420- 72
C145M	♦GESY	466- 96
C145N	♦GESY	476- 29
C145P	♦GESY	483- 15
C145PA	♦GESY	486- 25
C145PB	♦GESY	488- 31
C145S	♦GESY	471- 94
C145T	♦GESY	480- 30
C146A	GESY	428- 6
C146B	GESY	437- 62
C146C	GESY	445- 66
C146D	GESY	453- 68
C146E	GESY	460- 3
C146F	GESY	420- 73
C146M	GESY	466- 75
C146N	GESY	476- 16
C146P	GESY	482-110
C146S	GESY	471- 81
C146T	GESY	480- 19
C147A	GESY	428- 7
C147B	GESY	437- 63
C147C	GESY	445- 67
C147D	GESY	453- 69
C147F	GESY	420- 74
C150E△	GESY	460-102
	SES	
C150E⊠	♦NAT	460- 94
C150M△	GESY	468- 7
	SES	
C150M⊠	♦NAT	473- 77
C150N△	GESY	477- 20
	SES	
C150N⊠	♦NAT	482- 3
C150P△	GESY	483- 88
	SES	
C150P⊠	♦NAT	489- 2
C150PA△	GESY	486- 72
	SES	
C150PA⊠	♦NAT	491- 14
C150PB△	GESY	488- 95
C150PB⊠	♦NAT	492- 30
C150PC△	GESY	491- 6
C150PC⊠	♦NAT	493- 13
C150S△	GESY	472- 47
	SES	
C150S⊠	♦NAT	479- 55
C150T△	GESY	480- 86
	SES	
C150T⊠	♦NAT	484- 4
C151E△	SES	460-103
C151E⊠	♦NAT	468- 18
C151M△	SES	468- 8
C151M⊠	♦NAT	473- 75
C151N△	SES	477- 21
C151N⊠	♦NAT	482- 1
C151P△	SES	483- 89
C151P⊠	♦NAT	488-102
C151PA△	SES	486- 73
C151PA⊠	♦NAT	491- 12
C151PB	SES	488- 85
C151PC	SES	490-103
C151S△	SES	472- 48
C151S⊠	♦NAT	479- 53
C151T△	SES	480- 87
C151T⊠	♦NAT	483- 98

TYPE No.	MFRS	Pg&Line
C152E△	GESY	460-104
	SES	
C152E⊠	♦NAT	468- 40
C152M△	GESY	468- 9
	SES	
C152M⊠	♦NAT	473- 78
C152N△	GESY	477- 22
	SES	
C152N⊠	♦NAT	482- 4
C152P△	GESY	483- 90
	SES	
C152P⊠	♦NAT	489- 3
C152PA△	GESY	486- 74
	SES	
C152PA⊠	♦NAT	491- 15
C152PB△	GESY	488- 96
C152PB⊠	♦NAT	492- 31
C152PC△	GESY	491- 7
C152PC⊠	♦NAT	493- 14
C152S△	GESY	472- 49
	SES	
C152S⊠	♦NAT	479- 56
C152T△	GESY	480- 88
	SES	
C152T⊠	♦NAT	484- 5
C153E△	SES	460-105
C153E⊠	♦NAT	468- 19
C153M△	SES	468- 10
C153M⊠	♦NAT	473- 76
C153N△	SES	477- 23
C153N⊠	♦NAT	482- 2
C153P△	SES	483- 91
C153P⊠	♦NAT	488-103
C153PA△	SES	486- 75
C153PA⊠	♦NAT	491- 13
C153PB	SES	488- 86
C153PC	SES	490-104
C153S△	SES	472- 50
C153S⊠	♦NAT	479- 54
C153T△	SES	480- 89
C153T⊠	♦NAT	483- 99
C154A△	GESY	428- 55
C154A⊠	♦NAT	429-100
C154B△	GESY	438- 36
C154B⊠	♦NAT	440- 44
C154C△	GESY	446- 35
C154C⊠	♦NAT	448- 62
C154D△	GESY	454- 58
C154D⊠	♦NAT	457- 2
C154E△	GESY	460- 81
C154E⊠	♦NAT	468- 24
C154M	GESY	467- 88
C155A△	GESY	428- 56
C155A⊠	♦NAT	429-101
C155B△	GESY	438- 37
C155B⊠	♦NAT	440- 45
C155C△	GESY	446- 36
C155C⊠	♦NAT	448- 63
C155D△	GESY	454- 59
C155D⊠	♦NAT	457- 3
C155E△	GESY	460- 82
C155E⊠	♦NAT	468- 25
C155M	GESY	467- 89
C156A△	GESY	428- 57
C156A⊠	♦NAT	429-102
C156B△	GESY	438- 38
C156B⊠	♦NAT	440- 46
C156C△	GESY	446- 37
C156C⊠	♦NAT	448- 64
C156D△	GESY	454- 60
C156D⊠	♦NAT	457- 4
C156E△	GESY	460- 83
C156E⊠	♦NAT	468- 26
C156M	GESY	467- 90
C157A△	GESY	428- 58
C157A⊠	♦NAT	429-103
C157B△	GESY	438- 39
C157B⊠	♦NAT	440- 47
C157C△	GESY	446- 38
C157C⊠	♦NAT	448- 65
C157D△	GESY	454- 61
C157D⊠	♦NAT	457- 5
C157E△	GESY	460- 84
C157E⊠	♦NAT	468- 27
C157M	GESY	467- 91
C158E	GESY	461- 26
	NAT	
C158M	GESY	468- 60
	NAT	
C158N	GESY	477- 60
	NAT	
C158P	GESY	484- 20
	NAT	
C158S	GESY	472- 73
	NAT	
C158T	GESY	481- 2
	NAT	
C159E	GESY	461- 27
	NAT	
C159M	GESY	468- 61
	NAT	
C159N	GESY	477- 61
	NAT	
C159P	GESY	484- 21
	NAT	
C159S	GESY	472- 74
	NAT	
C159T	GESY	481- 3
	NAT	
C178A	♦NAT	429-104
C178B	♦NAT	440- 50
C178C	♦NAT	448- 68
C178D	♦NAT	457- 8
C178E	♦NAT	469- 17

TYPE No.	MFRS	Pg&Line
C178M	♦NAT	473- 81
C178N	♦NAT	482- 7
C178P	♦NAT	489- 50
C178PA	♦NAT	491- 34
C178PB	♦NAT	492- 52
C178S	♦NAT	479- 59
C178T	♦NAT	484- 67
C180A△	GESY	429- 22
	SES	
C180A⊠	♦NAT	429-106
C180B△	GESY	439- 60
	SES	
C180B⊠	♦NAT	440- 52
C180C△	GESY	447- 20
	SES	
C180C⊠	♦NAT	448- 70
C180D△	GESY	455- 88
	SES	
C180D⊠	♦NAT	457- 10
C180E△	GESY	461- 82
	SES	
C180E⊠	♦NAT	469- 53
C180M△	GESY	469- 54
	SES	
C180M⊠	♦NAT	473- 83
C180N△	GESY	478- 41
	SES	
C180N⊠	♦NAT	482- 9
C180P△	GESY	484- 86
	SES	
C180P⊠	♦NAT	489- 66
C180PA△	GESY	487- 3
	SES	
C180PA⊠	♦NAT	491- 45
C180PB△	GESY	489- 67
	SES	
C180PB⊠	♦NAT	492- 63
C180PC△	GESY	491- 46
	SES	
C180PC⊠	♦NAT	493- 22
C180S△	GESY	473- 1
	SES	
C180S⊠	♦NAT	479- 61
C180T△	GESY	481- 38
	SES	
C180T⊠	♦NAT	484- 87
C181A	♦NAT	429-105
C181B	♦NAT	440- 51
C181C	♦NAT	448- 69
C181D	♦NAT	457- 9
C181E	♦NAT	469- 45
C181M	♦NAT	473- 82
C181N	♦NAT	482- 8
C181P	♦NAT	489- 62
C181PA	♦NAT	491- 41
C181PB	♦NAT	492- 62
C181S	♦NAT	479- 60
C181T	♦NAT	484- 81
C185A△	♦GESY	429- 23
C185A⊠	♦NAT	429-107
C185B△	♦GESY	439- 61
C185B⊠	♦NAT	440- 53
C185C△	♦GESY	447- 21
C185C⊠	♦NAT	448- 71
C185D△	♦GESY	455- 89
C185D⊠	♦NAT	457- 11
C185E△	♦GESY	461- 83
C185E⊠	♦NAT	469- 55
C185M	♦GESY	439- 53
C280N	♦GESY	478- 46
C280P	♦GESY	484- 91
C280PA	♦GESY	487- 7
C280PB	♦GESY	489- 71
C280PC	♦GESY	491- 50
C280PD	♦GESY	492- 64
C280PE	♦GESY	493- 23
C280PM	♦GESY	493-102
C280PS	♦GESY	494- 38
C280S	♦GESY	473- 6
C280T	♦GESY	481- 42
C281N	♦GESY	478- 47
C281P	♦GESY	484- 92
C281PA	♦GESY	487- 8
C281PB	♦GESY	489- 72
C281PC	♦GESY	491- 51
C281PD	♦GESY	492- 65
C281PE	♦GESY	493- 24
C281PM	♦GESY	493-103
C281PN	GESY	494- 60
C281PS	♦GESY	494- 39
C281S	♦GESY	473- 7
C281T	♦GESY	481- 43
C290A	♦GESY	429- 66
	NAT	
C290B	♦GESY	440- 5
	NAT	
C290C	♦GESY	447- 76
	NAT	
C290D	♦GESY	456- 38
	NAT	
C290E	♦GESY	462- 29
	NAT	
C290F	♦GESY	421- 48
C290G	GESY	431- 89
C290H	GESY	441-107
	NAT	
C290J	GESY	448- 47
C290M	♦GESY	470- 17
	NAT	
C290N	♦GESY	478-110
	NAT	
C290P	♦GESY	485- 42
	NAT	

△-Registered with JEDEC by this manufacturer

♦-Copy of mfr's data sheet may be ordered from D.A.T.A.

1. TYPE No. CROSS INDEX

IN TYPE NUMBER SEQUENCE

TYPE No.	MFRS	Pg&Line
C290PA	♦GESY	487- 33
	NAT	
C290PB	♦GESY	490- 14
	NAT	
C290S	♦GESY	473- 38
	NAT	
C290T	♦GESY	481- 71
	NAT	
C291A△	GESY	429- 63
C291A⊠	♦NAT	429- 67
C291B△	GESY	440- 2
C291B⊠	♦NAT	440- 7
C291C△	GESY	447- 73
C291C⊠	♦NAT	447- 78
C291D△	GESY	456- 35
C291D⊠	♦NAT	456- 41
C291E△	♦GESY	462- 30
C291E⊠	♦NAT	462- 32
C291F△	GESY	421- 46
C291F⊠	♦NAT	421- 49
C291G△	GESY	431- 90
C291G⊠	NAT	431- 92
C291H△	GESY	441-108
C291H⊠	NAT	441-110
C291J	GESY	448- 48
C291M△	♦GESY	470- 18
C291M⊠	♦NAT	470- 21
C291N△	♦GESY	479- 1
C291N⊠	♦NAT	479- 3
C291P△	♦GESY	485- 43
C291P⊠	♦NAT	485- 45
C291PA△	♦GESY	487- 34
C291PA⊠	♦NAT	487- 35
C291PB△	♦GESY	490- 15
C291PB⊠	♦NAT	490- 16
C291S△	♦GESY	473- 39
C291S⊠	♦NAT	473- 40
C291T△	♦GESY	481- 72
C291T⊠	♦NAT	481- 73
C350A	NAT	429- 2
C350B	NAT	439- 25
C350C	NAT	446-104
C350D	NAT	455- 49
C350E	GESY	461- 55
	NAT	
C350M	GESY	469- 7
	NAT	
C350N	GESY	478- 3
	NAT	
C350P	GESY	484- 59
	NAT	
C350PA	GESY	486-101
	NAT	
C350PB	GESY	489- 43
	NAT	
C350PC	GESY	491- 32
	NAT	
C350S	GESY	472- 91
	NAT	
C350T	GESY	481- 22
	NAT	
C354A	GESY	422-101
C354B	GESY	431-107
C354C	GESY	442- 3
C354D	GESY	448- 74
C354E	GESY	457- 12
C354M	GESY	462- 79
C355A	GESY	422-102
C355B	GESY	431-108
C355C	GESY	442- 4
C355D	GESY	448- 75
C355E	GESY	457- 13
C355M	GESY	462- 80
C358E	GESY	461- 58
C358M	GESY	469- 11
C358N	GESY	478- 7
C358P	GESY	484- 62
C358PA	GESY	486-102
C358PB	GESY	489- 45
C358S	GESY	472- 94
C358T	GESY	481- 24
C380A	GESY	429- 54
	NAT	
C380B	GESY	439- 98
	NAT	
C380C	GESY	447- 59
	NAT	
C380D	GESY	456- 18
	NAT	
C380E	GESY	462- 9
	NAT	
C380M	GESY	469- 99
	NAT	
C380N	GESY	478- 84
	NAT	
C380P	GESY	485- 16
	NAT	
C380PA	GESY	487- 21
	NAT	
C380PB	GESY	489-100
	NAT	
C380PC	GESY	491- 61
	NAT	
C380S	GESY	473- 25
	NAT	
C380T	GESY	481- 60
	NAT	
C385A	GESY	422-103
	NAT	
C385B	GESY	431-109
	NAT	
C385C	GESY	442- 5
	NAT	

TYPE No.	MFRS	Pg&Line
C385D	GESY	448- 76
	NAT	
C385E	GESY	457- 14
	NAT	
C385M	GESY	462- 81
	NAT	
C387E	GESY	462- 50
C387M	GESY	470- 40
C387N	GESY	479- 19
C387P	GESY	485- 61
C387PA	GESY	487- 46
C387PB	GESY	490- 30
C387S	GESY	473- 51
C387T	GESY	481- 84
C388E	GESY	462- 51
C388M	GESY	470- 41
C388N	GESY	479- 20
C388P	GESY	485- 62
C388PA	GESY	487- 47
C388PB	GESY	490- 31
C388S	GESY	473- 52
C388T	GESY	481- 85
C397E	GESY	462- 61
C397M	GESY	470- 53
C397N	GESY	479- 35
C397P	GESY	485- 72
C397PA	GESY	487- 54
C397PB	GESY	490- 41
C397S	GESY	473- 60
C397T	GESY	481- 92
C398E	GESY	462- 62
C398M	GESY	470- 54
C398N	GESY	479- 36
C398P	GESY	485- 73
C398PA	GESY	487- 55
C398PB	GESY	490- 42
C398S	GESY	473- 61
C398T	GESY	481- 93
C501N	♦GESY	473- 89
C501P	♦GESY	485- 82
C501PA	♦GESY	487- 62
C501PB	♦GESY	487- 63
C501PC	♦GESY	490- 52
C501PD	♦GESY	491- 90
C501PE	♦GESY	492-110
C501PN	♦GESY	493- 44
C501PS	♦GESY	494- 33
C501S	♦GESY	470- 69
C501T	♦GESY	479- 65
C506A	♦GESY	422-104
C506B	♦GESY	431-110
C506C	♦GESY	442- 6
C506D	♦GESY	448- 77
C506E	♦GESY	457- 15
C506M	♦GESY	462- 82
C507A	GESY	429- 83
C507B	GESY	440- 24
C507C	GESY	447- 97
C507D	GESY	456- 62
C507E	GESY	462- 57
C507M	GESY	470- 47
C507N	GESY	479- 26
C507P	GESY	485- 66
C507PA	GESY	487- 49
C507PB	GESY	490- 35
C507PC	GESY	491- 82
C507PD	GESY	492-106
C507S	GESY	473- 56
C507T	GESY	481- 88
C508A	GESY	429- 84
C508B	GESY	440- 25
C508C	GESY	447- 98
C508D	GESY	456- 63
C508E	GESY	462- 58
C508M	GESY	470- 48
C508N	GESY	479- 27
C508P	GESY	485- 67
C508PA	GESY	487- 50
C508PB	GESY	490- 36
C508S	GESY	473- 57
C508T	GESY	481- 89
C510A	♦GESY	422-105
C510B	♦GESY	432- 1
C510C	♦GESY	442- 7
C510D	♦GESY	448- 78
C510E	♦GESY	457- 16
C510M	♦GESY	462- 83
C510S	♦GESY	470- 70
C511A	♦GESY	424- 39
C511B	♦GESY	433- 40
C511C	♦GESY	442- 88
C511D	♦GESY	449- 47
C511F	♦GESY	418- 35
C511G	♦GESY	430- 67
C511H	♦GESY	440- 93
C511U	♦GESY	414- 95
C520A	GESY	429- 87
C520B	GESY	440- 29
C520C	GESY	447-105
C520D	GESY	456- 70
C530A	GESY	429- 86
C530B	GESY	440- 28
C530C	GESY	447-102
C530D	GESY	456- 69
C530E	GESY	462- 65
C530M	GESY	470- 58
C600E	GESY	462- 15
C600M	GESY	469-108
C600N	GESY	479- 43
C600P	GESY	485- 81
C600PA	GESY	487- 61
C600PB	GESY	490- 51
C600S	GESY	473- 28
C601PA	GESY	487- 58

TYPE No.	MFRS	Pg&Line
C601PB	GESY	490- 47
C601PC	GESY	491- 88
C601PD	GESY	492-109
C601PE	GESY	493- 43
C601PM	GESY	494- 32
C601PS	GESY	494- 50
C602L	GESY	494-110
C602LA	GESY	495- 2
C602LB	GESY	495- 5
C602LC	GESY	495- 6
C602LD	GESY	495- 9
C602LE	GESY	495- 15
C602PM	GESY	494- 29
C602PN	GESY	494- 83
C602PS	GESY	494- 49
C602PT	GESY	494- 94
C611A	GESY	424- 40
C611B	GESY	433- 41
C611F	GESY	418- 36
C611G	GESY	430- 68
C611U	GESY	414- 96
C4011	♦CRL	174-179
C4012	♦CRL	177- 48
C4013	♦CRL	179-100
C4014	♦CRL	181-156
C4015	♦CRL	185- 80
C4016	♦CRL	187-151
C4017	♦CRL	189-186
C4018	♦CRL	192- 31
C4019	♦CRL	194-113
C4020	♦CRL	197- 61
C4021	♦CRL	199- 63
C4022	♦CRL	201-145
C4023	♦CRL	204-116
C4024	♦CRL	206- 86
C4025	♦CRL	208- 83
C4026	♦CRL	210-142
C4027	♦CRL	212-183
C4028	♦CRL	214-131
C4029	♦CRL	216- 79
C5001	CRL	165- 42
C5002	CRL	165-112
C5003	CRL	166- 84
C5004	CRL	169- 30
C5005	♦CRL	171- 66
C006001D,E,F,G,H	AEL	520- 75
C006004D,E,F,G,H	AEL	526- 21
C006010D,E,F,G	AEL	529- 41
C6012	♦CRL	177- 49
C6012A	♦CRL	177- 50
C6013	♦CRL	179-101
C6013A	♦CRL	179-102
C6014	♦CRL	181-157
C6014A	♦CRL	181-158
C6015	♦CRL	185- 81
C6015A	♦CRL	185- 82
C6016	♦CRL	187-152
C6016A	♦CRL	187-153
C6017	♦CRL	189-187
C6017A	♦CRL	189-188
C6018	♦CRL	192- 32
C6018A	♦CRL	192- 33
C6019	♦CRL	194-114
C6019A	♦CRL	194-115
C6020	♦CRL	197- 62
C6020A	♦CRL	197- 63
C6021	♦CRL	199- 64
C6021A	♦CRL	199- 65
C6022	♦CRL	201-146
C6022A	♦CRL	201-147
C6023	♦CRL	204-117
C6023A	♦CRL	204-118
C6024	♦CRL	206- 87
C6024A	♦CRL	206- 88
C6025	♦CRL	208- 84
C6025A	♦CRL	208- 85
C6026	♦CRL	210-143
C6026A	♦CRL	210-144
C6027	♦CRL	212-184
C6027A	♦CRL	212-185
C6028	♦CRL	214-132
C6028A	♦CRL	214-133
C6029	♦CRL	216- 80
C6029A	♦CRL	216- 81
C6030	♦CRL	217-153
C6030A	♦CRL	217-154
C6031	♦CRL	219- 58
C6031A	♦CRL	219- 59
C6032	♦CRL	220-180
C6032A	♦CRL	220-181
C6100	♦CRL	166- 31
C6100A	♦CRL	166- 32
C6101	♦CRL	166-105
C6101A	♦CRL	166-106
C6102	♦CRL	166-195
C6102A	♦CRL	167- 1
C6103	♦CRL	167-151
C6103A	♦CRL	167-152
C6104	♦CRL	168-103
C6104A	♦CRL	168-104
C6105	♦CRL	169-103
C6105A	♦CRL	169-104
C6106	♦CRL	170-101
C6106A	♦CRL	170-102
C6107	♦CRL	171-148
C6107A	♦CRL	171-149
C6108	♦CRL	172-189
C6108A	♦CRL	172-190
C6109	♦CRL	174-180
C6109A	♦CRL	174-181
C6112	♦CRL	177- 51

TYPE No.	MFRS	Pg&Line
C6112A	♦CRL	177- 52
C6113	♦CRL	179-103
C6113A	♦CRL	179-104
C6114	♦CRL	181-159
C6114A	♦CRL	181-160
C6115	♦CRL	185- 83
C6115A	♦CRL	185- 84
C6116	♦CRL	187-154
C6116A	♦CRL	187-155
C6117	♦CRL	189-189
C6117A	♦CRL	189-190
C6118	♦CRL	192- 34
C6118A	♦CRL	192- 35
C6119	♦CRL	194-116
C6119A	♦CRL	194-117
C6120	♦CRL	197- 64
C6120A	♦CRL	197- 65
C6121	♦CRL	199- 66
C6121A	♦CRL	199- 67
C6122	♦CRL	201-148
C6122A	♦CRL	201-149
C6123	♦CRL	204-119
C6123A	♦CRL	204-120
C6124	♦CRL	206- 89
C6124A	♦CRL	206- 90
C6125	♦CRL	208- 86
C6125A	♦CRL	208- 87
C6126	♦CRL	210-145
C6126A	♦CRL	210-146
C6127	♦CRL	212-186
C6127A	♦CRL	212-187
C6128	♦CRL	214-134
C6128A	♦CRL	214-135
C6129	♦CRL	216- 82
C6129A	♦CRL	216- 83
C6130	♦CRL	217-155
C6130A	♦CRL	217-156
C6131	♦CRL	219- 60
C6131A	♦CRL	219- 61
C6132	♦CRL	220-182
C6132A	♦CRL	220-183
C6201	♦CRL	414- 3
C6202	♦CRL	416- 17
C6203	♦CRL	421- 57
C6204	♦CRL	422-109
C6205	♦CRL	430- 1
C6206	♦CRL	432- 4
C6211	♦CRL	414- 91
C6212	♦CRL	418- 31
C6213	♦CRL	424- 33
C6214	♦CRL	430- 64
C6215	♦CRL	433- 34
C6216	♦CRL	440- 91
C6217	♦CRL	442- 86
C6251	CRL	273- 78
C6252	CRL	280- 46
C6253	CRL	281- 72
C6254	CRL	283- 85
C6311	CRL	277- 58
C6330	CRL	175-201
C6330A	CRL	175-202
C6331	CRL	175-203
C6331A	CRL	175-204
C6332	CRL	176- 1
C6332A	CRL	176- 2
C6391	CRL	250- 56
C6391A	CRL	250- 57
C6392	CRL	254- 29
C6392A	CRL	254- 30
C6393	CRL	256- 41
C6393A	CRL	256- 42
C6394	CRL	257- 46
C6394A	CRL	257- 47
C6395	CRL	258- 30
C6395A	CRL	258- 31
C6396	CRL	258- 95
C6396A	CRL	258- 96
C6397	CRL	259- 59
C6397A	CRL	259- 60
C6398	CRL	259-102
C6399	CRL	260- 9
C015001D,E,F,G,H	AEL	520- 76
C015004D,E,F,G,H	AEL	526- 22
C015010D,E,F,G	AEL	529- 42
C015020C,D,E	AEL	532- 38
C024004D,E,F,G,H	AEL	526- 23
C024010C,D,E,F	AEL	529- 43
C024020C,D,E	AEL	532- 39
C030004C,E,F,G	AEL	526- 24
C030010C,D,E,F	AEL	529- 44
C030020B,C,D,E	AEL	532- 40
C045004C,D,E,F	AEL	526- 25
C045010B,C,D,E,F	AEL	529- 45
C045020B,C,D	AEL	532- 41
C060010A,B,C,D,E	AEL	529- 46
C060020A,B,C,D	AEL	532- 42
C090010A,B,C,D	AEL	529- 47
C090020A,B,C	AEL	532- 43
CA10	LTTF	246- 47
CA20	LTTF	247- 19
CA50	LTTF	250- 3

TYPE No.	MFRS	Pg&Line
CA100	LTTF	253- 93
CA102BA	ITT	301- 18
CA102DA	ITT	312- 16
CA102FA	ITT	321-108
CA102HA	ITT	330-108
CA102KA	ITT	340- 82
CA102MA	ITT	348- 25
CA102PA	ITT	355- 84
CA102RA	ITT	360- 96
CA102VA	ITT	371- 21
CA150	LTTF	255- 80
CA152VA	ITT	371- 22
CA200	LTTF	256-109
CA250	LTTF	258- 11
CA69001	TSC	270- 82
CA69001A	TSC	277- 59
CA69002	TSC	270- 83
CA69002A	TSC	277- 60
CA69003	TSC	270- 84
CA69003A	TSC	277- 61
CA69004	TSC	270- 85
CA69004A	TSC	277- 62
CAY10	APX	523- 36
♦MULB	♦PHIC	
♦RADF	♦VALG	
CAY11	♦MULB	263-108
PHIC	♦RADF	
CAY13	♦VALG	512- 92
CAY14	♦VALG	512- 93
CAY15	♦VALG	512- 94
CB5	♦EDI	294- 32
CB5F	♦EDI	272- 68
CB10△	LTTF	246- 48
CB10#	♦EDI	301- 19
CB10F	♦EDI	279- 30
CB20△	LTTF	247- 20
CB20#	♦EDI	312- 17
CB20F	♦EDI	283- 68
CB40	♦EDI	330-109
CB40F	♦EDI	286- 13
CB50	LTTF	250- 4
CB60	♦EDI	348- 26
CB60F	♦EDI	287- 7
CB80	♦EDI	361- 5
CB80F	♦EDI	288- 12
CB100△	LTTF	253- 94
CB100#	EDI	371- 40
CB100F	♦EDI	288- 21
CB101	♦TSC	582- 93
CB150	LTTF	255- 81
CB200△	LTTF	256-110
CB200⊠	UNI	416- 27
CB201	UNI	421- 71
CB202	UNI	423- 11
CB203	UNI	432- 15
CB250	LTTF	258- 12
CB5020	UNI	497- 20
CB5021	UNI	497- 35
CB5022	UNI	497- 51
CB5023	UNI	497- 78
CBA110	ITT	539- 97
CBA111	ITT	559- 8
CBA112	ITT	561- 87
CC102BA	ITT	301- 20
CC102DA	ITT	312- 18
CC102FA	ITT	321-109
CC102HA	ITT	330-110
CC102KA	ITT	340- 83
CC102MA	ITT	348- 27
CC102PA	ITT	355- 85
CC102RA	ITT	360- 97
CC102VA	ITT	371- 23
CC152VA	ITT	371- 24
CC4012	LUCB	193-158
CC4013	LUCB	195-176
CC4015	LUCB	198-160
CC4016	LUCB	200-117
CC4018	LUCB	203- 53
CC4020	LUCB	205-185
CC4022	LUCB	207-175
CC4024	LUCB	209-145
CC4027	LUCB	212- 45
CC4030	LUCB	214- 44
CC4033	LUCB	215-204
CD31-00001	TSC	167- 54
CD31-00002	TSC	168- 12
CD31-00003	TSC	168-162
CD31-00004	TSC	169-161
CD31-00005	TSC	170-167
CD31-00006	TSC	172- 10
CD31-00007	TSC	173- 77
CD31-00008	TSC	175- 52
CD31-00009	TSC	177-173
CD31-00010	TSC	180- 45
CD31-00011	TSC	182- 92
CD31-00012	TSC	186- 25
CD31-00013	TSC	188-104
CD31-00014	TSC	190- 98
CD31-00015	TSC	192-173
CD31-00016	TSC	195- 36
CD31-00017	TSC	198- 3
CD31-00018	TSC	199-172
CD31-00019	TSC	202- 96
CD31-00020	TSC	205- 43
CD31-00021	TSC	207- 22
CD31-00022	TSC	209- 8
CD31-00023	TSC	211- 86
CD31-00024	TSC	213- 87
CD31-00025	TSC	215- 54
CD31-12008	♦TSC	167- 55
CD31-12009	♦TSC	168- 13
CD31-12010	♦TSC	168-163
CD31-12011	♦TSC	169-162
CD31-12012	♦TSC	170-168

△-Registered with JEDEC by this manufacturer

♦-Copy of mfr's data sheet may be ordered from D.A.T.A.

1. TYPE No. CROSS INDEX

IN TYPE NUMBER SEQUENCE

TYPE No.	MFRS	Pg&Line
CD31-12013	♦TSC	172- 11
CD31-12014	♦TSC	173- 78
CD31-12015	♦TSC	175- 53
CD31-12016	TSC	177-174
CD31-12017	TSC	180- 46
CD31-12018	TSC	182- 93
CD31-12019	TSC	186- 26
CD31-12020	TSC	188-105
CD31-12021	TSC	190- 99
CD31-12022	TSC	192-174
CD31-12023	TSC	195- 37
CD31-12024	TSC	198- 4
CD31-12025	TSC	199-173
CD31-12026	TSC	202- 97
CD31-12027	TSC	205- 44
CD31-12028	TSC	207- 23
CD31-12029	TSC	209- 9
CD31-12030	TSC	211- 87
CD31-12031	TSC	213- 88
CD31-12032	TSC	215- 55
CD32-12046	♦TSC	177-175
CD32-12047	♦TSC	180- 47
CD32-12048	♦TSC	182- 94
CD32-12049	♦TSC	186- 27
CD32-12050	♦TSC	188-106
CD32-12051	♦TSC	190-100
CD32-12052	♦TSC	192-175
CD32-12053	♦TSC	195- 38
CD32-12054	♦TSC	198- 5
CD32-12055	♦TSC	199-174
CD32-12056	♦TSC	202- 98
CD32-12057	♦TSC	205- 45
CD32-12058	♦TSC	207- 24
CD32-12059	♦TSC	209- 10
CD32-12060	♦TSC	211- 88
CD32-12061	♦TSC	213- 89
CD32-12062	♦TSC	215- 56
CD200	UNI	414- 1
CD201	UNI	422- 4
CD202	UNI	423- 64
CD203	UNI	432- 61
CD1111	TSC	248- 75
CD1112	TSC	252- 22
CD1113	TSC	255- 24
CD1114	TSC	256- 90
CD1115	TSC	257-101
CD1116	TSC	258- 91
CD1117	TSC	292- 10
CD1121	TSC	292-100
CD1122	TSC	299- 12
CD1123	TSC	318- 91
CD1124	TSC	307- 53
CD1125	TSC	309- 82
CD1126	TSC	319- 12
CD1127	TSC	320- 43
CD1141	TSC	251- 29
CD1142	TSC	255- 10
CD1143	TSC	256- 72
CD1147	TSC	251- 38
CD1148	TSC	255- 15
CD1149	TSC	256- 76
CD1151	TSC	258- 25
CD3122	TSC	171- 41
CD3123	TSC	173-170
CD3124	TSC	179- 8
CD3125	TSC	184- 17
CD3126	TSC	189-113
CD3127	TSC	194- 4
CD3128	TSC	199- 6
CD3129	TSC	203-113
CD3168	TSC	222-135
CD3169	TSC	224- 27
CD3171	TSC	225-166
CD3172	TSC	227- 36
CD3173	TSC	228-136
CD3174	TSC	230- 31
CD4012	LUCB	193-159
CD4013	LUCB	195-177
CD4015	LUCB	198-161
CD4016	LUCB	200-118
CD4018	LUCB	203- 54
CD4020	LUCB	205-186
CD4022	LUCB	207-176
CD4024	LUCB	209-146
CD4027	LUCB	212- 46
CD4030	LUCB	214- 45
CD4033	LUCB	216- 1
CD4111	TSC	183-133
CD4112	TSC	183-134
CD4113	TSC	183-135
CD4114	TSC	183-136
CD4115	TSC	183-137
CD4116	TSC	191-182
CD4117	TSC	191-183
CD4118	TSC	191-184
CD4121	TSC	191-185
CD4122	TSC	191-186
CD5000	UNI	497- 25
CD5001	UNI	497- 40
CD5002	UNI	497- 56
CD5003	UNI	497- 83
CD5645	♦TSC	252- 50
CD6111	TSC	274- 67
CD6112	TSC	274- 68
CD13332	TSC	256- 51
CD13333	TSC	256- 52
CD13334	TSC	256- 49
CD13335	TSC	256- 53
CD13336	TSC	256- 54
CD13337	TSC	256- 55
CD13338	TSC	256- 56
CD13339	TSC	256- 58
CE502	ITT	311-108
CE504	ITT	330- 89

TYPE No.	MFRS	Pg&Line
CE506	ITT	348- 8
CE508	ITT	360- 98
CE510	ITT	371- 25
CER67	SCN	293- 87
	SOD	
CER67A	SCN	292- 87
	SOD	
CER67B	SCN	293- 1
	SOD	
CER67C	SCN	293- 36
	SOD	
CER67F	SCN	293- 78
	SOD	
CER68	SCN	300- 45
	SOD	
CER68A	SCN	298-108
	SOD	
CER68B	SCN	299- 25
	SOD	
CER68C	SCN	299- 76
	SOD	
CER69	SCN	311- 28
	SOD	
CER69A	SCN	309- 71
	SOD	
CER69B	SCN	309- 96
	SOD	
CER69C	SCN	310- 42
	SOD	
CER70	SCN	330- 3
	SOD	
CER70A	SCN	328- 26
	SOD	
CER70B	SCN	328- 52
	SOD	
CER70C	SCN	329- 2
	SOD	
CER71	SCN	347- 34
	SOD	
CER71A	SCN	345- 91
	SOD	
CER71B	SCN	346- 2
	SOD	
CER71C	SCN	346- 53
	SOD	
CER71F	SCN	347- 16
	SOD	
CER72	SCN	360- 24
	SOD	
CER72A	SCN	358-105
	SOD	
CER72B	SCN	359- 9
	SOD	
CER72C	SCN	359- 22
	SOD	
CER72D	SCN	359- 66
	SOD	
CER72F	SCN	360- 11
	SOD	
CER73	SCN	370- 67
	SOD	
CER73A	SCN	369- 30
	SOD	
CER73B	SCN	369- 52
	SOD	
CER73C	SCN	369- 77
	SOD	
CER73D	SCN	370- 8
	SOD	
CER73F	SCN	370- 55
	SOD	
CER500	SOD	340- 22
CER500A	SOD	338-105
CER500B	SOD	339- 16
CER500C	SOD	339- 56
CER500F	SOD	340- 12
CER1200F	SOD	378- 1
CF10	♦SCO	405- 96
CF15	♦SCO	408- 47
CF20	♦SCO	410- 18
CF25	♦SCO	411- 28
CF30	♦SCO	412- 29
CF35	♦SCO	412- 56
CF40	♦SCO	412- 86
CF45	♦SCO	412-106
CF50	♦SCO	413- 10
CF102BA	ITT	301- 21
CF102DA	ITT	312- 19
CF102FA	ITT	321-110
CF102HA	ITT	331- 1
CF102KA	ITT	340- 84
CF102MA	ITT	348- 28
CF102PA	ITT	355- 86
CF102RA	ITT	360- 99
CF102VA	ITT	371- 26
CF152VA	ITT	372- 4
CFR10	♦SCO	405- 83
CFR15	♦SCO	408- 42
CFR20	♦SCO	410- 15
CFR25	♦SCO	411- 25
CFR30	♦SCO	412- 26
CFR35	♦SCO	412- 54
CFR40	♦SCO	412- 83
CFR45	♦SCO	412-103
CFR50	♦SCO	413- 7
CG60H	AEIL	255- 63
CG61H	AEIL	253- 73
CG62H	AEIL	253- 74
CG63H	AEIL	253- 75
CG64H	AEIL	249- 46
CG65H	AEIL	247- 9
CG66H	AEIL	250-100
CG70H	AEIL	276- 32
CG71H	AEIL	273- 46

TYPE No.	MFRS	Pg&Line
CG72H	AEIL	273- 42
CG74H	AEIL	247- 17
CG80H	AEIL	279- 1
CG81H	AEIL	276- 7
CG82H	AEIL	272- 50
CG83H	AEIL	266-102
CG84H	AEIL	264- 84
CG85H	AEIL	264- 86
CG86H	AEIL	247- 75
CG90H	AEIL	266- 96
CG91AH	AEIL	265- 93
CG92AH	AEIL	264- 62
CG94H	AEIL	246- 54
CGD301	ITT	272-107
CGD309	ITT	265-101
CGD462	ITT	249- 62
CGD553	ITT	269- 62
CGD573	ITT	173-186
CGD591	ITT	246- 17
CGD592	ITT	264- 64
CGD685	ITT	246- 27
CGD1029	ITT	248- 30
CGD1030	ITT	263- 88
CGD1031	ITT	265- 20
CGD1032	ITT	266- 99
CGD1420	ITT	263- 62
CGD1450	ITT	276- 83
CGD1451	ITT	273- 70
CGD1460	ITT	268- 85
CGD1461	ITT	266-107
CGD1470	ITT	266- 20
CGD1471	ITT	265- 49
CGD1480	ITT	264- 81
CGD1481	ITT	263-103
CGY11A	♦TFKG	599- 10
CGY11B	♦TFKG	599- 11
CGY12A	♦TFKG	599- 12
CGY12B	♦TFKG	599- 13
CGY13A	♦TFKG	599- 14
CGY13B	♦TFKG	599- 15
CGY14A	♦TFKG	599- 16
CGY14B	♦TFKG	599- 17
CH109A2	♦TUNL	305- 94
CH109AZ2	♦TUNL	308- 73
CH109B2	♦TUNL	317- 37
CH109C2	♦TUNL	325- 77
CH109D2	♦TUNL	336- 58
CH109E2	♦TUNL	344- 6
CH109F2	♦TUNL	353- 29
CH109Z2	♦TUNL	297- 73
CH119A	♦TUNL	306- 65
CH119AZ	♦TUNL	309- 4
CH119B	♦TUNL	318- 16
CH119C	♦TUNL	326- 50
CH119D	♦TUNL	337- 56
CH119E	♦TUNL	344- 86
CH119F	♦TUNL	354- 7
CH119Z	♦TUNL	298- 6
CH302BA	ITT	302-106
CH302DA	ITT	314- 6
CH302FA	ITT	323- 41
CH302HA	ITT	332-108
CH302KA	ITT	341-109
CH302MA	ITT	350- 16
CH302PA	ITT	356- 62
CH302RA	ITT	362- 77
CH1511	♦TUNL	375-106
CH1512	♦TUNL	380- 98
CH1513	♦TUNL	383- 52
CH1514	♦TUNL	387- 36
CH1515	♦TUNL	388- 80
CH1516	♦TUNL	390- 71
CH1517	♦TUNL	391-110
CH1518	♦TUNL	394- 99
CH1611	♦TUNL	391- 4
CH1612	♦TUNL	391- 53
CH1613	♦TUNL	392- 82
CH1614	♦TUNL	394-102
CH1615	♦TUNL	395- 88
CH1616	♦TUNL	397- 71
CH1621	♦TUNL	368- 95
CH1622	♦TUNL	377- 33
CH1623	♦TUNL	383- 76
CH1624	♦TUNL	387- 49
CH1625	♦TUNL	389- 12
CJ1	PWC	300-104
CJ1 5	PWC	307- 84
CJ2	PWC	311- 93
CJ3	PWC	321- 90
CJ4	PWC	330- 75
CJ05	PWC	294- 16
CJ5	PWC	340- 64
CJ6	PWC	347-104
CJ7	PWC	355- 76
CJ8	PWC	360- 84
CK302BA	ITT	302-107
CK302DA	ITT	314- 7
CK302FA	ITT	323- 42
CK302HA	ITT	332-109
CK302KA	ITT	341-110
CK302MA	ITT	350- 17
CK302PA	ITT	356- 63
CK302RA	ITT	362- 78
CL1△	UNI	498- 22
CL1⊘	PWC	300-105
CL1.5	PWC	307- 85
CL2△	UNI	498- 20
CL2⊘	PWC	311- 94
CL3△	UNI	498- 9
CL3⊘	PWC	321- 91
CL4	PWC	330- 76
CL05	PWC	294- 17
CL5△	PWC	340- 65
CL5⊘	♦SCO	399- 52

TYPE No.	MFRS	Pg&Line
CL5M2	♦CLA	577- 18
CL5M2L	♦CLA	577- 19
CL5M3	♦CLA	577- 20
CL5M4	♦CLA	577- 21
CL5M4L	♦CLA	577- 22
CL5M5	♦CLA	577- 23
CL5M5L	♦CLA	577- 24
CL5M7	♦CLA	577- 25
CL6	PWC	347-105
CL7	PWC	355- 77
CL8	PWC	360- 85
CL10	♦SCO	405- 97
CL15	♦SCO	408- 48
CL20	♦SCO	410- 19
CL25	♦SCO	411- 29
CL30	♦SCO	412- 30
CL35	♦SCO	412- 57
CL40	♦SCO	412- 87
CL45	♦SCO	412-107
CL50	♦SCO	413- 11
CL100	♦CRL	597- 35
CL110	♦CRL	597- 36
CL110A	♦CRL	597- 37
CL110B	♦CRL	597- 38
CL150	♦CRL	597- 39
CL502	♦CLA	577- 26
CL502L	♦CLA	577- 27
CL503	♦CLA	577- 28
CL504	♦CLA	577- 29
CL504L	♦CLA	577- 30
CL505	♦CLA	577- 31
CL505L	♦CLA	577- 32
CL507	♦CLA	577- 33
CL602	♦CLA	577- 34
CL603	♦CLA	577- 35
CL603A	♦CLA	577- 36
CL603AL	♦CLA	577- 37
CL604	♦CLA	577- 38
CL604L	♦CLA	577- 39
CL604M	♦CLA	577- 40
CL605	♦CLA	577- 41
CL605L	♦CLA	577- 42
CL607	♦CLA	577- 43
CL607L	♦CLA	577- 44
CL702	♦CLA	577- 45
CL702L2	♦CLA	577- 46
CL702L	♦CLA	577- 47
CL703	♦CLA	577- 48
CL703/2	♦CLA	577- 49
CL703A	♦CLA	577- 50
CL703C	CLA	577- 51
CL703CL	CLA	577- 52
CL703L2	♦CLA	577- 53
CL703L	♦CLA	577- 54
CL703M	♦CLA	577- 55
CL704	♦CLA	577- 56
CL704L2	♦CLA	577- 57
CL704L	♦CLA	577- 58
CL705	♦CLA	577- 59
CL705/2	♦CLA	577- 60
CL705HL2	♦CLA	577- 61
CL705HL	♦CLA	577- 62
CL705L2	♦CLA	577- 63
CL705L	♦CLA	577- 64
CL707	♦CLA	577- 65
CL707H	♦CLA	577- 66
CL707HL	♦CLA	577- 67
CL707HM	♦CLA	577- 68
CL707L	♦CLA	577- 69
CL902	♦CLA	577- 70
CL902L	♦CLA	577- 71
CL903	♦CLA	577- 72
CL903A	♦CLA	577- 73
CL903C	CLA	577- 74
CL903L	♦CLA	577- 75
CL903N	♦CLA	577- 76
CL904	♦CLA	577- 77
CL904L	♦CLA	577- 78
CL904N	♦CLA	577- 79
CL905	♦CLA	577- 80
CL905HL	♦CLA	577- 81
CL905HLL	CLA	577- 82
CL905HN	♦CLA	577- 83
CL905L	♦CLA	577- 84
CL905N	♦CLA	577- 85
CL907	♦CLA	577- 86
CL907HL	♦CLA	577- 87
CL907HN	♦CLA	577- 88
CL907L	♦CLA	577- 89
CL907N	♦CLA	577- 90
CL1020	♦SIX	593- 83
CL1520	♦SIX	593- 84
CL2210	♦SIX	593- 85
CL2220	♦SIX	593- 86
CL3310	♦SIX	593- 87
CL3320	♦SIX	593- 88
CL4710	♦SIX	593- 89
CL4720	♦SIX	593- 90
CL6810	♦SIX	593- 91
CL8360	RADF	594- 60
CL8370	RADF	594- 61
CL8380	RADF	594- 62
CL8390	RADF	594- 63
CL8420	RADF	594- 64
CL8700	RADF	599- 18
CL8700-3	RADF	599- 19
CLR5	♦SCO	399- 44
CLR10	♦SCO	405- 84
CLR15	♦SCO	408- 43
CLR20	♦SCO	410- 16
CLR25	♦SCO	411- 26
CLR30	♦SCO	412- 27
CLR35	♦SCO	412- 55
CLR40	♦SCO	412- 84

TYPE No.	MFRS	Pg&Line
CLR45	♦SCO	412-104
CLR50	♦SCO	413- 8
CM1	PWC	300-106
CM1 5	PWC	307- 86
CM2	PWC	311- 95
CM3	PWC	321- 92
CM4	PWC	330- 77
CM05	PWC	294- 18
CM5	PWC	340- 66
CM6	PWC	347-106
CM7	PWC	355- 78
CM8	PWC	360- 86
CM100	♦UNI	422- 51
CM101	♦UNI	425- 19
CM102	♦UNI	434- 34
CM103	♦UNI	443- 43
CM104	♦UNI	450- 31
CM106	♦UNI	422- 52
CM107	♦UNI	425- 20
CM108	♦UNI	434- 35
CM109	♦UNI	443- 44
CM110	♦UNI	450- 32
CODI531	CODI	300- 8
CODI532	CODI	310- 91
CODI533	CODI	321- 15
CODI534	CODI	329- 61
CODI535	CODI	339-100
CODI536	CODI	346- 96
CODI537	CODI	355- 49
CODI538	CODI	359-106
CODI551	CODI	299- 23
CODI552	CODI	309- 93
CODI553	CODI	320- 54
CODI554	CODI	328- 48
CODI555	CODI	339- 13
CODI556	CODI	345-109
CODI611	CODI	300- 9
CODI612	CODI	310- 92
CODI613	CODI	321- 16
CODI614	CODI	329- 62
CODI615	CODI	339-101
CODI616	CODI	346- 97
CODI617	CODI	355- 50
CODI618	CODI	359-107
CODI5314	CODI	301- 86
CODI5324	CODI	312- 83
CODI5334	CODI	322- 45
CODI5344	CODI	331- 69
CODI5354	CODI	341- 14
CODI5364	CODI	348- 94
CODI5514	CODI	299- 54
CODI5524	CODI	310- 16
CODI5534	CODI	320- 76
CODI5544	CODI	328- 83
CODI5554	CODI	339- 40
CODI5564	CODI	346- 27
CODI6041	♦CODI	581- 69
CODI6041M	♦CODI	581- 70
CODI6042	♦CODI	581- 71
CODI6042M	♦CODI	581- 72
CODI6043	♦CODI	581- 73
CODI6043M	♦CODI	581- 74
CODI6044	♦CODI	581- 75
CODI6044M	♦CODI	581- 76
CODI6045	♦CODI	581- 77
CODI6045M	♦CODI	581- 78
CODI6046	♦CODI	581- 79
CODI6046M	♦CODI	581- 80
CODI6047	♦CODI	581- 81
CODI6047M	♦CODI	581- 82
CODI6048	♦CODI	581- 83
CODI6048M	♦CODI	581- 84
CODI6049	CODI	581- 85
CODI6049M	♦CODI	581- 86
CODI6050	CODI	581- 87
CODI6050M	♦CODI	581- 88
CODI6051	CODI	581- 89
CODI6051M	♦CODI	581- 90
CODI6052	CODI	581- 91
CODI6052M	♦CODI	581- 92
CP100	EDI	329- 13
CP101	EDI	329- 14
CP102	EDI	355- 30
CP102BA	ITT	301- 22
CP102DA	ITT	312- 20
CP102FA	ITT	322- 1
CP102HA	ITT	331- 2
CP102KA	ITT	340- 85
CP102MA	ITT	348- 29
CP102PA	ITT	355- 88
CP102RA	ITT	361- 6
CP102VA	ITT	371- 27
CP103	EDI	369- 54
CP104	EDI	377- 58
CP110	EDI	385-103
CP115	EDI	385- 98
CP119	EDI	388- 10
CP121	EDI	393- 19
CP123	EDI	394- 47
CP124	EDI	394- 14
CP126	EDI	398- 16
CP127	EDI	398- 33
CP128	EDI	400- 13
CP129	EDI	399- 59
CP130	EDI	401- 16
CP131	EDI	402- 49
CP132	EDI	403- 77
CP133	EDI	403- 78
CP134	EDI	406- 23
CP135	EDI	406- 46
CP136	EDI	406- 47
CP137	EDI	406- 81
CP138	EDI	408- 81
CP139	EDI	408- 82

△-Registered with JEDEC by this manufacturer

♦-Copy of mfr's data sheet may be ordered from D.A.T.A.

1. TYPE No. CROSS INDEX

IN TYPE NUMBER SEQUENCE

TYPE No.	MFRS	Pg&Line
CP140	EDI	408 - 29
CP141	EDI	408 - 67
CP142	EDI	408 - 89
CP143	EDI	408 - 68
CP144	EDI	409 - 1
CP145	EDI	409 - 8
CP146	EDI	409 - 32
CP147	EDI	409 - 78
CP148	EDI	410 - 3
CP149	EDI	410 - 4
CP150	EDI	410 - 7
CP151	EDI	411 - 19
CP152	EDI	411 - 20
CP152VA	ITT	371 - 28
CP153	EDI	411 - 52
CP154	EDI	411 - 42
CP155	EDI	412 - 35
CP156	EDI	412 - 20
CP157	EDI	412 - 47
CP158	EDI	412 - 82
CPD110	♦ CRL	575 - 54
CPD110A	♦ CRL	575 - 55
CQY10	♦ TFKG	597 - 40
CQY11A	♦ RADF	597 - 41
CQY11B	APX	597 - 42
♦ PHIC	♦ RADF	
CQY12A	♦ RADF	597 - 43
CQY12B	♦ RADF	597 - 44
CQY13	RADF	599 - 20
CQY14	RADF	599 - 21
CQY15	RADF	599 - 22
CR1	CRY	599 - 23
CR1-021C	AEIL	414 - 85
CR1-051C	AEIL	418 - 22
CR1-101C	AEIL	424 - 23
CR1-201C	AEIL	433 - 24
CR1-301C	AEIL	442 - 77
CR1-401C	AEIL	449 - 37
CR02AM1	MITJ	417 - 97
CR02AM2	MITJ	423 - 33
CR02AM4	MITJ	432 - 37
CR02AM6	MITJ	442 - 30
CR2	CRY	599 - 24
CR2AM1	MITJ	418 - 43
CR2AM2	MITJ	424 - 47
CR2AM4	MITJ	433 - 48
CR3	CRY	599 - 25
CR3D1	MITJ	418 - 55
CR3D2	MITJ	424 - 65
CR3D4	MITJ	433 - 71
CR3D6	MITJ	442 -107
CR3D8	MITJ	449 - 76
CR3D10	MITJ	457 - 48
CR3D12	MITJ	463 - 25
CR4-051A	AEIL	419 - 47
CR4-051B	AEIL	419 - 48
CR4-101A	AEIL	425 - 79
CR4-101B	AEIL	425 - 80
CR4-201A	AEIL	434 -102
CR4-201B	AEIL	434 -103
CR4-301A	AEIL	443 - 77
CR4-301B	AEIL	443 - 78
CR4-401A	AEIL	450 - 98
CR4-401B	AEIL	450 - 99
CR4-501A	AEIL	458 - 3
CR4-501B	AEIL	458 - 4
CR4-601A	AEIL	464 - 9
CR4-601B	AEIL	464 - 10
CR005-01A	GSE	599 - 26
CR005-01B	GSE	599 - 27
CR005-01C	GSE	599 - 28
CR005-01D	GSE	599 - 29
CR005-01E	GSE	599 - 30
CR005-05A	GSE	599 - 31
CR005-05B	GSE	599 - 32
CR005-05C	GSE	599 - 33
CR005-05D	GSE	599 - 34
CR005-05E	GSE	599 - 35
CR005-10A	GSE	599 - 36
CR005-10B	GSE	599 - 37
CR005-10C	GSE	599 - 38
CR005-10D	GSE	599 - 39
CR005-10E	GSE	599 - 40
CR005-50A	GSE	599 - 41
CR005-50B	GSE	599 - 42
CR005-50C	GSE	599 - 43
CR005-50D	GSE	599 - 44
CR005-50E	GSE	599 - 45
CR05A1	MITJ	417 -101
CR05A2	MITJ	423 - 52
CR05A4	MITJ	432 - 54
CR05A6	MITJ	442 - 36
CR05A8	MITJ	448 - 90
CR05A10	MITJ	457 - 19
CR05A12	MITJ	462 - 86
CR5-051B	AEIL	419 - 19
CR5-101B	AEIL	425 - 43
CR5-102AB	AEIL	426 - 15
CR5-102B	AEIL	425 - 21
CR5-102BB	AEIL	426 - 16
CR5-102CB	AEIL	426 - 17
CR5-102DB	AEIL	426 - 18
CR5-102EB	AEIL	426 - 19
CR5-201B	AEIL	434 - 62
CR5-202AB	AEIL	435 - 47
CR5-202B	AEIL	434 - 37
CR5-202BB	AEIL	435 - 48
CR5-202CB	AEIL	435 - 49
CR5-202DB	AEIL	435 - 50
CR5-202EB	AEIL	435 - 51
CR5-301B	AEIL	443 - 56
CR5-302AB	AEIL	444 - 4
CR5-302B	AEIL	443 - 45
CR5-302BB	AEIL	444 - 5

TYPE No.	MFRS	Pg&Line
CR5-302CB	AEIL	444 - 6
CR5-302DB	AEIL	444 - 7
CR5-302EB	AEIL	444 - 8
CR5-401B	AEIL	450 - 58
CR5-402AB	AEIL	451 - 44
CR5-402B	AEIL	450 - 33
CR5-402BB	AEIL	451 - 45
CR5-402CB	AEIL	451 - 46
CR5-402DB	AEIL	451 - 47
CR5-402EB	AEIL	451 - 48
CR5-501B	AEIL	457 - 96
CR5-502AB	AEIL	458 - 37
CR5-502B	AEIL	457 - 84
CR5-502BB	AEIL	458 - 38
CR5-502CB	AEIL	458 - 39
CR5-502DB	AEIL	458 - 40
CR5-502EB	AEIL	458 - 41
CR5-601B	AEIL	463 - 93
CR5-602AB	AEIL	464 - 56
CR5-602B	AEIL	463 - 69
CR5-602BB	AEIL	464 - 57
CR5-602CB	AEIL	464 - 58
CR5-602DB	AEIL	464 - 59
CR5-602EB	AEIL	464 - 60
CR5-1029B	AEIL	426 - 20
CR5-2029B	AEIL	435 - 52
CR5-3029B	AEIL	444 - 9
CR5-4029B	AEIL	451 - 49
CR5-5029B	AEIL	458 - 42
CR5-6029B	AEIL	464 - 61
CR6-403RB	AEIL	444 - 10
CR6-403RBA	AEIL	444 - 11
CR6-503RB	AEIL	451 - 50
CR6-503RBA	AEIL	451 - 51
CR6-603RB	AEIL	458 - 43
CR6-603RBA	AEIL	458 - 44
CR6-703RB	AEIL	464 - 62
CR6-703RBA	AEIL	464 - 63
CR6-803RB	AEIL	471 - 3
CR6-803RBA	AEIL	471 - 4
CR6-903RB	AEIL	474 - 77
CR6-903RBA	AEIL	474 - 78
CR6-1003RB	AEIL	479 - 70
CR6-1003RBA	AEIL	479 - 71
CR6-1103RB	AEIL	482 - 24
CR6-1103RBA	AEIL	482 - 25
CR6-1203RB	AEIL	485 - 85
CR6-1203RBA	AEIL	485 - 86
CR6-1303RB	AEIL	487 - 70
CR6-1303RBA	AEIL	487 - 71
CR6-1403RB	AEIL	490 - 54
CR6-1403RBA	AEIL	490 - 55
CR7K103A35	AEIL	422 - 92
CR7K103A4	AEIL	422 - 91
CR7K103A45	AEIL	422 - 90
CR7K203A3	♦ AEIL	429 - 77
CR7K203A35	AEIL	431 - 93
CR7K203A4	AEIL	431 - 88
CR7K203A45	AEIL	431 - 87
CR7K303A35	AEIL	440 - 16
CR7K303A4	AEIL	439 -110
CR7K303A45	AEIL	439 -108
CR7K403A3	♦ AEIL	447 - 89
CR7K403A35	AEIL	447 - 87
CR7K403A4	AEIL	447 - 71
CR7K403A45	AEIL	447 - 68
CR7K503A3	AEIL	456 - 54
CR7K503A35	AEIL	456 - 50
CR7K503A4	AEIL	456 - 33
CR7K503A45	AEIL	456 - 31
CR7K603A3	♦ AEIL	462 - 46
CR7K603A35	AEIL	462 - 43
CR7K603A4	AEIL	462 - 24
CR7K603A45	AEIL	462 - 23
CR7K703A3	AEIL	470 - 36
CR7K703A35	AEIL	470 - 32
CR7K703A4	AEIL	470 - 12
CR7K703A45	AEIL	470 - 8
CR7K803A3	♦ AEIL	473 - 47
CR7K803A35	AEIL	473 - 45
CR7K803A4	AEIL	473 - 33
CR7K803A45	AEIL	473 - 32
CR7K903A3	AEIL	479 - 15
CR7K903A35	AEIL	479 - 10
CR7K903A4	AEIL	478 -105
CR7K903A45	AEIL	478 -101
CR7K1003A3	♦ AEIL	481 - 80
CR7K1003A35	AEIL	481 - 78
CR7K1003A4	AEIL	481 - 68
CR7K1003A45	AEIL	481 - 65
CR7K1103A3	♦ AEIL	485 - 57
CR7K1103A35	AEIL	485 - 52
CR7K1103A4	AEIL	485 - 38
CR7K1103A45	AEIL	485 - 34
CR7K1203A3	♦ AEIL	487 - 42
CR7K1203A35	AEIL	487 - 40
CR7K1203A4	AEIL	487 - 29
CR7K1203A45	AEIL	487 - 28
CR7K1303A3	♦ AEIL	490 - 26
CR7K1303A35	AEIL	490 - 22
CR7K1303A4	AEIL	490 - 10
CR7K1303A45	AEIL	490 - 6
CR7K1403A3	♦ AEIL	491 - 78
CR7K1403A35	AEIL	491 - 76
CR7K1403A4	AEIL	491 - 71
CR7K1403A45	AEIL	491 - 69
CR7K1503A35	AEIL	492 - 97
CR7K1503A4	AEIL	492 - 93
CR7K1503A45	AEIL	492 - 89
CR7K1603A4	AEIL	493 - 35
CR7K1603A45	AEIL	493 - 33
CR7K1703A4	AEIL	494 - 19
CR7K1703A45	AEIL	494 - 15
CR7K1803A4	AEIL	494 - 46

TYPE No.	MFRS	Pg&Line
CR7K1803A45	AEIL	494 - 45
CR7K1903A45	AEIL	494 - 78
CR7K2003A45	AEIL	494 - 93
CR7K2103A45	AEIL	494 -108
CR7K2203A45	AEIL	495 - 1
CR8-05	ORIJ	418 - 99
CR8-10	ORIJ	425 - 5
CR8-15	ORIJ	430 - 81
CR8-20	ORIJ	434 - 20
CR8-051C	AEIL	419 - 81
CR8-101C	AEIL	426 - 44
CR8-201C	AEIL	435 - 80
CR8-301C	AEIL	444 - 23
CR8-401C	AEIL	451 - 75
CR8-501C	AEIL	458 - 64
CR8-601C	AEIL	464 - 92
CR9K403A2	AEIL	447 - 99
CR9K403A25	AEIL	447 - 94
CR9K503A2	AEIL	456 - 65
CR9K503A25	AEIL	456 - 59
CR9K603A2	AEIL	462 - 59
CR9K603A25	AEIL	462 - 54
CR9K703A2	AEIL	470 - 51
CR9K703A25	AEIL	470 - 44
CR9K803A2	AEIL	473 - 58
CR9K803A25	AEIL	473 - 55
CR9K903A25	AEIL	479 - 25
CR9K1003A25	AEIL	481 - 87
CR10-051B	AEIL	419 - 83
CR10-101B	AEIL	426 - 47
CR10-102AB	AEIL	426 - 48
CR10-102B	AEIL	426 - 41
CR10-102BB	AEIL	426 - 49
CR10-102CB	AEIL	426 - 50
CR10-102DB	AEIL	426 - 51
CR10-102EB	AEIL	426 - 52
CR10-201B	AEIL	435 - 83
CR10-202AB	AEIL	435 - 84
CR10-202B	AEIL	435 - 75
CR10-202BB	AEIL	435 - 85
CR10-202CB	AEIL	435 - 86
CR10-202DB	AEIL	435 - 87
CR10-202EB	AEIL	435 - 88
CR10-301B	AEIL	444 - 26
CR10-302AB	AEIL	444 - 27
CR10-302B	AEIL	444 - 18
CR10-302BB	AEIL	444 - 28
CR10-302CB	AEIL	444 - 29
CR10-302DB	AEIL	444 - 30
CR10-302EB	AEIL	444 - 31
CR10-401B	AEIL	451 - 78
CR10-402AB	AEIL	451 - 79
CR10-402B	AEIL	451 - 72
CR10-402BB	AEIL	451 - 80
CR10-402CB	AEIL	451 - 81
CR10-402DB	AEIL	451 - 82
CR10-402EB	AEIL	451 - 83
CR10-501B	AEIL	458 - 67
CR10-502AB	AEIL	458 - 68
CR10-502B	AEIL	458 - 59
CR10-502BB	AEIL	458 - 69
CR10-502CB	AEIL	458 - 70
CR10-502DB	AEIL	458 - 71
CR10-502EB	AEIL	458 - 72
CR10-601B	AEIL	464 - 95
CR10-602AB	AEIL	464 - 96
CR10-602B	AEIL	464 - 85
CR10-602BB	AEIL	464 - 97
CR10-602CB	AEIL	464 - 98
CR10-602DB	AEIL	464 - 99
CR10-602EB	AEIL	464 -100
CR10-1001B	AEIL	482 - 31
CR10-1029B	AEIL	426 - 53
CR10-2029B	AEIL	435 - 89
CR10-3029B	AEIL	444 - 32
CR10-4029B	AEIL	451 - 84
CR10-5029B	AEIL	458 - 73
CR10-6029B	AEIL	464 -101
CR10B2	MITJ	426 - 6
CR10B4	MITJ	435 - 37
CR10B6	MITJ	443 -105
CR10B8	MITJ	451 - 36
CR10B10	MITJ	458 - 28
CR10B12	MITJ	464 - 46
CR10B16	MITJ	474 - 74
CR10C2	MITJ	426 - 34
CR10C4	MITJ	435 - 66
CR10C6	MITJ	444 - 13
CR10C8	MITJ	451 - 63
CR10C10	MITJ	458 - 50
CR10C12	MITJ	464 - 76
CR10C16	MITJ	474 - 89
CR10CY2	MITJ	426 - 13
CR10CY4	MITJ	435 - 45
CR10CY6	MITJ	444 - 2
CR10CY8	MITJ	451 - 43
CR10CY10	MITJ	458 - 35
CR10CY12	MITJ	464 - 54
CR10EY2	MITJ	426 - 14
CR10EY4	MITJ	435 - 46
CR10EY6	MITJ	444 - 3
CR10EY10	MITJ	458 - 36
CR10EY12	MITJ	464 - 55
CR12-403RB	AEIL	444 - 37
CR12-403RBA	AEIL	444 - 38
CR12-503RB	AEIL	451 - 93
CR12-503RBA	AEIL	451 - 94
CR12-603RB	AEIL	458 - 77
CR12-603RBA	AEIL	458 - 78
CR12-703RB	AEIL	464 -107
CR12-703RBA	AEIL	464 -108
CR12-803RB	AEIL	471 - 7
CR12-803RBA	AEIL	471 - 8
CR12-903RB	AEIL	474 - 95

TYPE No.	MFRS	Pg&Line
CR12-903RBA	AEIL	474 - 96
CR12-1003RB	AEIL	479 - 73
CR12-1003RBA	AEIL	479 - 74
CR12-1103RB	AEIL	482 - 32
CR12-1103RBA	AEIL	482 - 33
CR12-1203RB	AEIL	485 - 88
CR12-1203RBA	AEIL	485 - 89
CR12-1303RB	AEIL	487 - 73
CR12-1303RBA	AEIL	487 - 74
CR12-1403RB	AEIL	490 - 57
CR12-1403RBA	AEIL	490 - 58
CR16-051B	AEIL	420 - 23
CR16-101B	AEIL	427 - 19
CR16-102AB	AEIL	427 - 20
CR16-102B	AEIL	427 - 2
CR16-102BB	AEIL	427 - 21
CR16-102CB	AEIL	427 - 22
CR16-102DB	AEIL	427 - 23
CR16-102EB	AEIL	427 - 24
CR16-201B	AEIL	436 - 59
CR16-202AB	AEIL	436 - 60
CR16-202B	AEIL	436 - 41
CR16-202BB	AEIL	436 - 61
CR16-202CB	AEIL	436 - 62
CR16-202DB	AEIL	436 - 63
CR16-202EB	AEIL	436 - 64
CR16-301B	AEIL	444 - 84
CR16-302AB	AEIL	444 - 85
CR16-302B	AEIL	444 - 71
CR16-302BB	AEIL	444 - 86
CR16-302CB	AEIL	444 - 87
CR16-302DB	AEIL	444 - 88
CR16-302EB	AEIL	444 - 89
CR16-401B	AEIL	452 - 53
CR16-402AB	AEIL	452 - 54
CR16-402B	AEIL	452 - 33
CR16-402BB	AEIL	452 - 55
CR16-402CB	AEIL	452 - 56
CR16-402DB	AEIL	452 - 57
CR16-402EB	AEIL	452 - 58
CR16-501B	AEIL	459 - 25
CR16-502AB	AEIL	459 - 26
CR16-502B	AEIL	459 - 2
CR16-502BB	AEIL	459 - 27
CR16-502CB	AEIL	459 - 28
CR16-502DB	AEIL	459 - 29
CR16-502EB	AEIL	459 - 30
CR16-601B	AEIL	465 - 64
CR16-602AB	AEIL	465 - 65
CR16-602B	AEIL	465 - 43
CR16-602BB	AEIL	465 - 66
CR16-602CB	AEIL	465 - 67
CR16-602DB	AEIL	465 - 68
CR16-602EB	AEIL	465 - 69
CR16-1029B	AEIL	427 - 25
CR16-2029B	AEIL	436 - 65
CR16-3029B	AEIL	444 - 90
CR16-4029B	AEIL	452 - 59
CR16-5029B	AEIL	459 - 31
CR16-6029B	AEIL	465 - 70
CR18-403RB	AEIL	444 - 97
CR18-403RBA	AEIL	444 - 98
CR18-503RB	AEIL	452 - 78
CR18-503RBA	AEIL	452 - 79
CR18-603RB	AEIL	459 - 39
CR18-603RBA	AEIL	459 - 40
CR18-703RB	AEIL	465 - 90
CR18-703RBA	AEIL	465 - 91
CR18-803RB	AEIL	471 - 31
CR18-803RBA	AEIL	471 - 32
CR18-903RB	AEIL	475 - 52
CR18-903RBA	AEIL	475 - 53
CR18-1003RB	AEIL	479 - 85
CR18-1003RBA	AEIL	479 - 86
CR18-1103RB	AEIL	482 - 58
CR18-1103RBA	AEIL	482 - 59
CR18-1203RB	AEIL	485 - 98
CR18-1203RBA	AEIL	485 - 99
CR18-1303RB	AEIL	487 - 90
CR18-1303RBA	AEIL	487 - 91
CR18-1403RB	AEIL	490 - 64
CR18-1403RBA	AEIL	490 - 65
CR20A2	MITJ	427 - 9
CR20A4	MITJ	436 - 49
CR20A6	MITJ	444 - 78
CR20A8	MITJ	452 - 43
CR20A10	MITJ	459 - 11
CR20A12	MITJ	465 - 51
CR20A16	MITJ	475 - 26
CR20A20	MITJ	482 - 50
CR20EY2	MITJ	427 - 17
CR20EY4	MITJ	436 - 57
CR20EY6	MITJ	444 - 82
CR20EY8	MITJ	452 - 51
CR20EY10	MITJ	459 - 23
CR20EY12	MITJ	465 - 62
CR20EY16	MITJ	475 - 36
CR20F12	MITJ	465 - 72
CR20F16	MITJ	475 - 38
CR20F20	MITJ	482 - 54
CR20F24	MITJ	487 - 86
CR24-403RB	AEIL	445 - 53
CR24-403RBA	AEIL	445 - 54
CR24-503RB	AEIL	453 - 39
CR24-503RBA	AEIL	453 - 40
CR24-603RB	AEIL	459 -102
CR24-603RBA	AEIL	459 -103
CR24-703RB	AEIL	466 - 48
CR24-703RBA	AEIL	466 - 49
CR24-803RB	AEIL	471 - 70
CR24-803RBA	AEIL	471 - 71
CR24-903RB	AEIL	475 - 99
CR24-903RBA	AEIL	475 -100
CR24-1003RB	AEIL	480 - 9

TYPE No.	MFRS	Pg&Line
CR24-1003RBA	AEIL	480 - 10
CR24-1103RB	AEIL	482 - 94
CR24-1103RBA	AEIL	482 - 95
CR24-1203RB	AEIL	486 - 14
CR24-1203RBA	AEIL	486 - 15
CR24-1303RB	AEIL	488 - 9
CR24-1303RBA	AEIL	488 - 10
CR24-1403RB	AEIL	490 - 74
CR24-1403RBA	AEIL	490 - 75
CR25-051B	AEIL	420 - 48
CR25-101B	AEIL	427 - 73
CR25-201B	AEIL	437 - 4
CR25-301B	AEIL	445 - 15
CR25-401B	AEIL	453 - 3
CR25-501B	AEIL	459 - 67
CR25-601B	AEIL	466 - 9
CR30-01	ORIJ	427 - 70
CR30-02	ORIJ	437 - 1
CR30-04	ORIJ	452 -110
CR30-06	ORIJ	466 - 6
CR30-08	ORIJ	475 - 74
CR30-10	ORIJ	482 - 72
CR30-053A	AEIL	420 - 68
CR30-103A	AEIL	427 - 99
CR30-104A	AEIL	427 -100
CR30-104AA	AEIL	422 - 66
CR30-104BA	AEIL	422 - 67
CR30-104CA	AEIL	422 - 68
CR30-104DA	AEIL	422 - 69
CR30-203A	AEIL	437 - 30
CR30-204A	AEIL	437 - 31
CR30-204AA	AEIL	431 - 17
CR30-204BA	AEIL	431 - 18
CR30-204CA	AEIL	431 - 19
CR30-204DA	AEIL	427 -101
CR30-303A	AEIL	445 - 40
CR30-304A	AEIL	445 - 41
CR30-304AA	AEIL	441 - 37
CR30-304BA	AEIL	441 - 38
CR30-304CA	AEIL	441 - 39
CR30-304DA	AEIL	437 - 32
CR30-403A	AEIL	453 - 29
CR30-404A	AEIL	453 - 30
CR30-404AA	AEIL	445 - 42
CR30-404BA	AEIL	445 - 43
CR30-404CA	AEIL	445 - 44
CR30-404DA	AEIL	445 - 45
CR30-503A	AEIL	459 - 94
CR30-504A	AEIL	459 - 95
CR30-504AA	AEIL	453 - 31
CR30-504BA	AEIL	453 - 32
CR30-504CA	AEIL	453 - 33
CR30-504DA	AEIL	453 - 34
CR30-603A	AEIL	466 - 37
CR30-604A	AEIL	466 - 38
CR30-604AA	AEIL	459 - 96
CR30-604BA	AEIL	459 - 97
CR30-604CA	AEIL	459 - 98
CR30-604DA	AEIL	459 - 99
CR30-703A	AEIL	471 - 66
CR30-704AA	AEIL	466 - 39
CR30-704BA	AEIL	466 - 40
CR30-704CA	AEIL	466 - 41
CR30-704DA	AEIL	466 - 42
CR30-803A	AEIL	475 - 93
CR30-804AA	AEIL	471 - 67
CR30-903A	AEIL	480 - 3
CR30-904AA	AEIL	475 - 94
CR30-1003A	AEIL	482 - 89
CR30-1004AA	AEIL	480 - 4
CR30-1103A	AEIL	486 - 9
CR30-1104AA	AEIL	482 - 90
CR30-1203A	AEIL	486 - 10
CR30-1204AA	AEIL	486 - 11
CR30-1303A	AEIL	488 - 5
CR30-1403A	AEIL	490 - 72
CR31-103A	AEIL	422 - 75
CR31-104AA	AEIL	422 - 76
CR31-104BA	AEIL	422 - 77
CR31-104CA	AEIL	422 - 78
CR31-104DA	AEIL	422 - 79
CR31-203A	AEIL	431 - 39
CR31-204AA	AEIL	431 - 40
CR31-204BA	AEIL	431 - 41
CR31-204CA	AEIL	431 - 42
CR31-204DA	AEIL	431 - 43
CR31-303A	AEIL	441 - 60
CR31-304AA	AEIL	441 - 61
CR31-304BA	AEIL	441 - 62
CR31-304CA	AEIL	441 - 63
CR31-304DA	AEIL	441 - 64
CR31-403A	AEIL	446 - 6
CR31-404AA	AEIL	446 - 7
CR31-404BA	AEIL	446 - 8
CR31-404CA	AEIL	446 - 9
CR31-404DA	AEIL	446 - 10
CR31-503A	AEIL	454 - 18
CR31-504AA	AEIL	454 - 19
CR31-504BA	AEIL	454 - 20
CR31-504CA	AEIL	454 - 21
CR31-504DA	AEIL	454 - 22
CR31-603A	AEIL	460 - 50
CR31-604AA	AEIL	460 - 51
CR31-604BA	AEIL	460 - 52
CR31-604CA	AEIL	460 - 53
CR31-604DA	AEIL	460 - 54
CR31-703A	AEIL	467 - 41
CR31-704AA	AEIL	467 - 42
CR31-704BA	AEIL	467 - 43
CR31-704CA	AEIL	467 - 44
CR31-704DA	AEIL	467 - 45
CR31-803A	AEIL	472 - 10
CR31-804AA	AEIL	472 - 11
CR31-903A	AEIL	476 - 74

Δ-Registered with JEDEC by this manufacturer

♦-Copy of mfr's data sheet may be ordered from D.A.T.A.

1. TYPE No. CROSS INDEX

IN TYPE NUMBER SEQUENCE

TYPE No.	MFRS	Pg&Line
CR31-904AA	AEIL	476- 75
CR31-1003A	AEIL	480- 56
CR31-1004AA	AEIL	480- 57
CR31-1103A	AEIL	483- 48
CR31-1104AA	AEIL	483- 49
CR31-1203A	AEIL	486- 47
CR31-1204AA	AEIL	486- 48
CR31-1303A	AEIL	488- 60
CR31-1403A	AEIL	490- 89
CR50-01	ORIJ	428- 1
CR50-02	ORIJ	437- 58
CR50-03	ORIJ	445- 64
CR50-04	ORIJ	453- 64
CR50-06	ORIJ	466- 72
CR50-08	ORIJ	476- 13
CR50-10	ORIJ	482-109
CR50-053A	AEIL	420- 83
CR50-103A	AEIL	428- 20
CR50-104A	AEIL	428- 21
CR50-104AA	AEIL	422- 70
CR50-104BA	AEIL	422- 71
CR50-104CA	AEIL	422- 72
CR50-104DA	AEIL	422- 73
CR50-104LA	AEIL	422- 74
CR50-203A	AEIL	437- 81
CR50-204A	AEIL	437- 82
CR50-204AA	AEIL	431- 27
CR50-204BA	AEIL	431- 28
CR50-204CA	AEIL	431- 29
CR50-204DA	AEIL	431- 30
CR50-204LA	AEIL	431- 31
CR50-303A	AEIL	445- 91
CR50-304A	AEIL	445- 92
CR50-304AA	AEIL	441- 48
CR50-304BA	AEIL	441- 49
CR50-304CA	AEIL	441- 50
CR50-304DA	AEIL	441- 51
CR50-304LA	AEIL	441- 52
CR50-403A	AEIL	453- 88
CR50-404A	AEIL	453- 89
CR50-404AA	AEIL	445- 94
CR50-404BA	AEIL	445- 95
CR50-404CA	AEIL	445- 96
CR50-404DA	AEIL	445- 97
CR50-404LA	AEIL	445- 98
CR50-503A	AEIL	460- 25
CR50-504A	AEIL	460- 26
CR50-504AA	AEIL	453- 91
CR50-504BA	AEIL	453- 92
CR50-504CA	AEIL	453- 93
CR50-504DA	AEIL	453- 94
CR50-504LA	AEIL	453- 95
CR50-603A	AEIL	466-104
CR50-604A	AEIL	466-105
CR50-604AA	AEIL	460- 28
CR50-604BA	AEIL	460- 29
CR50-604CA	AEIL	460- 30
CR50-604DA	AEIL	460- 31
CR50-604LA	AEIL	460- 32
CR50-703A	AEIL	471- 99
CR50-704AA	AEIL	466-108
CR50-704BA	AEIL	466-109
CR50-704CA	AEIL	466-110
CR50-704DA	AEIL	467- 1
CR50-704LA	AEIL	467- 2
CR50-803A	AEIL	476- 34
CR50-903A	AEIL	480- 36
CR50-1003A	AEIL	483- 19
CR50-1103A	AEIL	486- 28
CR50-1203A	AEIL	486- 30
CR50-1303A	AEIL	488- 35
CR50-1403A	AEIL	490- 84
CR51-103A	AEIL	422- 82
CR51-203A	AEIL	431- 55
CR51-303A	AEIL	441- 76
CR51-403A	AEIL	446- 34
CR51-503A	AEIL	454- 57
CR51-603A	AEIL	460- 80
CR51-703A	AEIL	467- 87
CR51-803A	AEIL	472- 34
CR51-903A	AEIL	477- 4
CR51-1003A	AEIL	480- 73
CR51-1103A	AEIL	483- 77
CR51-1203A	AEIL	486- 65
CR51-1303A	AEIL	488- 84
CR51-1403A	AEIL	490-101
CR70-051A	AEIL	417- 90
CR70-101A	AEIL	422- 80
CR70-101C	AEIL	422- 81
CR70-201A	AEIL	431- 51
CR70-201C	AEIL	431- 52
CR70-301A	AEIL	441- 72
CR70-301C	AEIL	441- 73
CR70-401A	AEIL	446- 26
CR70-401C	AEIL	446- 27
CR70-501A	AEIL	454- 38
CR70-501C	AEIL	454- 39
CR70-601A	AEIL	460- 70
CR70-601C	AEIL	460- 71
CR70-701A	AEIL	467- 66
CR70-701C	AEIL	467- 67
CR70-801A	AEIL	472- 24
CR70-801C	AEIL	472- 25
CR70-901A	AEIL	476- 92
CR70-901C	AEIL	476- 93
CR70-1001A	AEIL	480- 65
CR70-1001C	AEIL	480- 66
CR70-1101A	AEIL	483- 62
CR70-1101C	AEIL	483- 63
CR70-1201A	AEIL	486- 58
CR70-1201C	AEIL	486- 59
CR70-1301A	AEIL	488- 72
CR70-1301C	AEIL	488- 73
CR70-1401A	AEIL	490- 97

TYPE No.	MFRS	Pg&Line
CR70-1401C	AEIL	490- 98
CR70B2	MITJ	428- 23
CR70B4	MITJ	437- 84
CR70B6	MITJ	445-101
CR70B8	MITJ	453- 97
CR70B10	MITJ	460- 35
CR70B12	MITJ	467- 9
CR70B14	MITJ	471-106
CR70B16	MITJ	476- 41
CR70C4	MITJ	437- 88
CR70C8	MITJ	453-101
CR70C12	MITJ	467- 13
CR70C14	MITJ	471-108
CR70C16	MITJ	476- 45
CR70C20	MITJ	483- 28
CR70C24	MITJ	488- 42
CR70CX4	MITJ	437- 89
CR70CX6	MITJ	445-103
CR70CX8	MITJ	453-102
CR70CX12	MITJ	467- 14
CR70CX16	MITJ	476- 46
CR70CX20	MITJ	483- 29
CR70CY4	MITJ	437- 90
CR70CY6	MITJ	445-104
CR70CY8	MITJ	453-103
CR70CY10	MITJ	460- 37
CR70CY12	MITJ	467- 15
CR80-01	ORIJ	428- 42
CR80-02	ORIJ	438- 11
CR80-03	ORIJ	446- 18
CR80-04	ORIJ	454- 30
CR80-06	ORIJ	467- 56
CR80-08	ORIJ	476- 84
CR80-10	ORIJ	483- 54
CR100-01	ORIJ	428- 50
CR100-02	ORIJ	438- 31
CR100-04	ORIJ	454- 53
CR100-06	ORIJ	467- 83
CR100-08	ORIJ	476-110
CR100-10	ORIJ	483- 73
CR100-051C	AEIL	417- 91
CR100-101C	AEIL	422- 83
CR100-101D	AEIL	422- 84
CR100-201C	AEIL	431- 71
CR100-201D	AEIL	431- 72
CR100-301C	AEIL	441- 92
CR100-301D	AEIL	441- 93
CR100-401C	AEIL	446- 78
CR100-401D	AEIL	446- 79
CR100-501C	AEIL	455- 1
CR100-501D	AEIL	455- 2
CR100-601C	AEIL	461- 30
CR100-601D	AEIL	461- 31
CR100-701C	AEIL	468- 65
CR100-701D	AEIL	468- 66
CR100-801C	AEIL	472- 76
CR100-801D	AEIL	472- 77
CR100-901C	AEIL	477- 64
CR100-901D	AEIL	477- 65
CR100-1001C	AEIL	481- 5
CR100-1001D	AEIL	481- 6
CR100-1101C	AEIL	484- 23
CR100-1101D	AEIL	484- 24
CR100-1201C	AEIL	486- 88
CR100-1201D	AEIL	486- 89
CR100-1301C	AEIL	489- 13
CR100-1301D	AEIL	489- 14
CR100-1401C	AEIL	491- 23
CR100-1401D	AEIL	491- 24
CR100CX30	MITJ	493- 9
CR100CX32	MITJ	493- 55
CR100CX34	MITJ	494- 34
CR100CX36	MITJ	494- 53
CR101	♦RCA	378- 15
CR102	♦RCA	390- 19
CR103	♦RCA	394- 58
CR104	♦RCA	397- 39
CR105	♦RCA	399- 97
CR106	♦RCA	401- 51
CR107	♦RCA	402- 56
CR108	♦RCA	403-104
CR109	♦RCA	404- 89
CR110	♦RCA	406- 25
CR120-01	ORIJ	428- 89
CR120-02	ORIJ	438- 87
CR120-03	ORIJ	446- 77
CR120-04	ORIJ	454-110
CR120-06	ORIJ	468- 64
CR120-08	ORIJ	477- 63
CR120-10	ORIJ	484- 22
CR150-1202B	AEIL	489- 61
CR150BX2	MITJ	428- 97
CR150BX4	MITJ	438-107
CR150BX6	MITJ	446- 90
CR150BX8	MITJ	455- 22
CR150BX10	MITJ	461- 40
CR150BX12	MITJ	468- 87
CR150BX16	MITJ	477- 85
CR150BX20	MITJ	484- 36
CR150BY2	MITJ	428- 98
CR150BY4	MITJ	438-108
CR150BY6	MITJ	446- 91
CR150BY8	MITJ	455- 23
CR150BY10	MITJ	461- 41
CR150BY12	MITJ	468- 88
CR150F2	MITJ	428-109
CR150F4	MITJ	439- 22
CR150F6	MITJ	446-102
CR150F8	MITJ	455- 46
CR150F10	MITJ	461- 53
CR150F12	MITJ	469- 4
CR150F16	MITJ	477-110
CR150F20	MITJ	484- 56
CR150F24	MITJ	489- 40

TYPE No.	MFRS	Pg&Line
CR150F28	MITJ	492- 47
CR150F32	MITJ	493- 88
CR150F36	MITJ	494- 55
CR151-103A	AEIL	422- 87
CR151-203A	AEIL	431- 84
CR151-303A	AEIL	441-104
CR151-403A	AEIL	447- 25
CR151-503A	AEIL	455- 93
CR151-603A	AEIL	461- 87
CR151-703A	AEIL	469- 60
CR151-803A	AEIL	473- 8
CR151-903A	AEIL	478- 48
CR151-1003A	AEIL	481- 44
CR151-1103A	AEIL	484- 93
CR151-1203A	AEIL	487- 9
CR151-1303A	AEIL	489- 73
CR152-103A	AEIL	422- 86
CR152-203A	AEIL	431- 79
CR152-303A	AEIL	441- 99
CR152-403A	AEIL	447- 12
CR152-503A	AEIL	455- 79
CR152-603A	AEIL	461- 74
CR152-703A	AEIL	469- 41
CR152-803A	AEIL	472-106
CR152-903A	AEIL	478- 33
CR152-1003A	AEIL	481- 35
CR152-1103A	AEIL	484- 80
CR152-1203A	AEIL	486-110
CR152-1303A	AEIL	489- 60
CR152-1403A	AEIL	491- 40
CR153-103A	AEIL	422- 85
CR153-203A	AEIL	431- 77
CR153-303A	AEIL	441- 97
CR153-403A	AEIL	447- 10
CR153-503A	AEIL	455- 67
CR153-603A	AEIL	461- 72
CR153-703A	AEIL	469- 29
CR153-803A	AEIL	472-104
CR153-903A	AEIL	478- 21
CR153-1003A	AEIL	481- 33
CR153-1103A	AEIL	484- 74
CR153-1203A	AEIL	486-109
CR153-1303A	AEIL	489- 55
CR153-1403A	AEIL	491- 38
CR153-1503A	AEIL	492- 56
CR155-604NA	AEIL	461- 70
CR155-704NA	AEIL	469- 27
CR155-804NA	AEIL	472-102
CR155-904NA	AEIL	478- 19
CR155-1004NA	AEIL	481- 32
CR201	♦RCA	384- 46
CR203	♦RCA	394- 36
CR204	♦RCA	398- 28
CR206	♦RCA	401- 33
CR208	♦RCA	403- 93
CR210	♦RCA	406- 6
CR212	♦RCA	407- 39
CR250AX2	MITJ	429- 29
CR250AX4	MITJ	439- 70
CR250AX6	MITJ	447- 30
CR250AX8	MITJ	455- 98
CR250AX10	MITJ	461- 92
CR250AX12	MITJ	469- 66
CR250AX16	MITJ	478- 52
CR250AX20	MITJ	484- 97
CR250AY2	MITJ	429- 30
CR250AY4	MITJ	439- 71
CR250AY6	MITJ	447- 31
CR250AY8	MITJ	455- 99
CR250AY10	MITJ	461- 93
CR250AY12	MITJ	469- 67
CR250F2	MITJ	429- 33
CR250F4	MITJ	439- 74
CR250F6	MITJ	447- 33
CR250F8	MITJ	455-101
CR250F10	MITJ	461- 94
CR250F12	MITJ	469- 69
CR250F16	MITJ	478- 55
CR250F20	MITJ	484-100
CR250F24	MITJ	489- 77
CR250F28	MITJ	492- 69
CR250F32	MITJ	493-107
CR250F36	MITJ	494- 63
CR250GX2	MITJ	429- 25
CR250GX4	MITJ	439- 66
CR250GX6	MITJ	447- 26
CR250GX8	MITJ	455- 94
CR250GX10	MITJ	461- 88
CR250GX12	MITJ	469- 61
CR250GX16	MITJ	478- 49
CR250GX20	MITJ	484- 94
CR250GY2	MITJ	429- 26
CR250GY4	MITJ	439- 67
CR250GY6	MITJ	447- 27
CR250GY8	MITJ	455- 95
CR250GY10	MITJ	461- 89
CR250GY12	MITJ	469- 62
CR252-103A	AEIL	422- 89
CR252-203A	AEIL	431- 86
CR252-303A	AEIL	441-106
CR252-403A	AEIL	447- 56
CR252-503A	AEIL	456- 15
CR252-603A	AEIL	462- 7
CR252-703A	AEIL	469- 95
CR252-803A	AEIL	473- 23
CR252-903A	AEIL	478- 81
CR252-1003A	AEIL	481- 57
CR252-1103A	AEIL	485- 13
CR252-1203A	AEIL	487- 19
CR252-1303A	AEIL	489- 97
CR252-1403A	AEIL	491- 58
CR253-103A	AEIL	422- 88
CR253-203A	AEIL	431- 85
CR253-303A	AEIL	441-105

TYPE No.	MFRS	Pg&Line
CR253-403A	AEIL	447- 55
CR253-503A	AEIL	456- 14
CR253-603A	AEIL	462- 6
CR253-703A	AEIL	469- 94
CR253-803A	AEIL	473- 22
CR253-903A	AEIL	478- 80
CR253-1003A	AEIL	481- 56
CR253-1103A	AEIL	485- 12
CR253-1203A	AEIL	487- 18
CR253-1303A	AEIL	489- 96
CR253-1403A	AEIL	491- 57
CR253-1503A	AEIL	492- 82
CR300AW2	MITJ	429- 39
CR300AW4	MITJ	439- 82
CR300AW6	MITJ	447- 41
CR300AW8	MITJ	456- 1
CR300AW10	MITJ	461-104
CR300AW12	MITJ	469- 80
CR300AW16	MITJ	478- 66
CR300AW20	MITJ	484-109
CR300AW24	MITJ	489- 85
CR300AX2	MITJ	429- 40
CR300AX4	MITJ	439- 83
CR300AX6	MITJ	447- 42
CR300AX8	MITJ	456- 2
CR300AX10	MITJ	461-105
CR300AX12	MITJ	469- 81
CR300AX16	MITJ	478- 67
CR300AX20	MITJ	484-110
CR300AY2	MITJ	429- 41
CR300AY4	MITJ	439- 84
CR300AY6	MITJ	447- 43
CR300AY8	MITJ	456- 3
CR300AY10	MITJ	461-106
CR300AY12	MITJ	469- 82
CR300F2	MITJ	429- 43
CR300F4	MITJ	439- 86
CR300F6	MITJ	447- 44
CR300F8	MITJ	456- 5
CR300F10	MITJ	461-107
CR300F12	MITJ	469- 84
CR300F16	MITJ	478- 69
CR300F20	MITJ	485- 2
CR300F24	MITJ	489- 87
CR300F28	MITJ	492- 75
CR300F32	MITJ	494- 2
CR300F36	MITJ	494- 67
CR301	♦RCA	391- 98
CR302	♦RCA	396- 12
CR303	♦RCA	398- 80
CR304	♦RCA	401- 66
CR305	♦RCA	402- 85
CR306	♦RCA	404- 22
CR307	♦RCA	405- 22
CR311	♦RCA	391-101
CR312	♦RCA	396- 15
CR313	♦RCA	398- 83
CR314	♦RCA	401- 68
CR315	♦RCA	402- 86
CR316	♦RCA	404- 23
CR317	♦RCA	405- 23
CR321	♦RCA	391-102
CR322	♦RCA	396- 16
CR323	♦RCA	398- 84
CR324	♦RCA	401- 72
CR325	♦RCA	402- 87
CR331	♦RCA	391-103
CR332	♦RCA	396- 17
CR333	♦RCA	398- 85
CR334	♦RCA	401- 73
CR335	♦RCA	402- 88
CR341	♦RCA	391-104
CR342	♦RCA	396- 18
CR343	♦RCA	398- 86
CR344	♦RCA	401- 74
CR351	♦RCA	391-105
CR352	♦RCA	396- 19
CR353	♦RCA	398- 87
CR354	♦RCA	401- 75
CR18903RB	♦AEIL	475- 54
CR181003RB	♦AEIL	479- 87
CR181103RB	♦AEIL	482- 60
CR181203RB	♦AEIL	485-100
CR181303RB	♦AEIL	487- 92
CR181403RB	♦AEIL	490- 66
CRS1/05AF	ITTB	421- 50
CRS1/10AF	ITTB	429- 88
CRS1/20AF	ITTB	440- 30
CRS1/30AF	ITTB	447-107
CRS1/40AF	ITTB	456- 71
CRS3/05AF	ITTB	421- 51
CRS3/10AF	ITTB	429- 89
CRS3/20AF	ITTB	440- 31
CRS3/30AF	ITTB	447-108
CRS3/40AF	ITTB	456- 72
CSO 6-02	BBCG	432- 70
CSO 6-04	BBCG	448-100
CSO 6-06	BBCG	462- 89
CSO 6-08	BBCG	473- 91
CSO 6-10	BBCG	482- 10
CSO 6-12	BBCG	487- 64
CS1-02	BBCG	432- 81
CS1-04	BBCG	448-105
CS1-06	BBCG	462- 91
CS1-08	BBCG	473- 92
CS1-10	BBCG	482- 11
CS1-12	BBCG	487- 65
CS2A	AEIL	510- 32
CS3A	AEIL	512- 95
CS3B	AEIL	512- 96
CS4B	AEIL	517- 86
CS5-02	BBCG	434- 64
CS5-04	BBCG	450- 61
CS5-06	BBCG	463- 95

TYPE No.	MFRS	Pg&Line
CS5-08	BBCG	474- 37
CS5-10	BBCG	482- 13
CS5-12	BBCG	487- 67
CS8-02	BBCG	435- 22
CS8-04	BBCG	451- 21
CS8-06	BBCG	464- 35
CS8-08	BBCG	474- 67
CS8-10	BBCG	482- 20
CS8-12	BBCG	487- 68
CS9B	AEIL	512- 97
CS10B	AEIL	512- 98
CS11B	WESB	414- 77
CS11C	WESB	417-107
CS11D	WESB	422- 93
CS11E	WESB	429-108
CS11G	WESB	431- 94
CS11H	WESB	432- 71
CS11J	WESB	440- 72
CS11K	WESB	442- 47
CS11L	WESB	447-106
CS11M	WESB	448- 50
CS11N	WESB	448-101
CS12B	AEIL	414- 79
		510- 33
CS16-02	BBCG	436- 47
CS16-04	BBCG	452- 41
CS16-06	BBCG	465- 49
CS16-08	BBCG	475- 25
CS16-10	BBCG	482- 49
CS16-12	BBCG	487- 85
CS22-04	BBCG	452-100
CS22-06	BBCG	465-108
CS22-08	BBCG	475- 68
CS22-10	BBCG	482- 67
CS22-11	BBCG	485-102
CS22-12	BBCG	487- 95
CS22-13	BBCG	490- 69
CS31A	AEIL	517- 11
CS33A⊿	AEIL	510- 34
CS34A	AEIL	512- 99
CS36A	AEIL	510- 17
CS37A	AEIL	510- 35
CS42-06	BBCG	467- 64
CS42-08	BBCG	476- 90
CS42-10	BBCG	483- 60
CS42-12	BBCG	488- 70
CS42-14	BBCG	492- 14
CS42-16	BBCG	493- 61
CS80-06	BBCG	467- 69
CS80-08	BBCG	476- 95
CS80-10	BBCG	483- 65
CS80-11	BBCG	486- 60
CS80-12	BBCG	488- 75
CS80-13	BBCG	490- 99
CS80-14	BBCG	492- 16
CS80-15	BBCG	493- 11
CS130-08	BBCG	478- 8
CS130-10	BBCG	484- 63
CS130-11	BBCG	486-103
CS130-12	BBCG	489- 46
CS130-13	BBCG	491- 33
CS130-14	BBCG	492- 50
CS130-15	BBCG	493- 17
CS130-16	BBCG	493- 91
CS131A	♦TUNL	306- 76
CS131AZ	♦TUNL	309- 11
CS131B	♦TUNL	318- 27
CS131C	♦TUNL	326- 61
CS131D	♦TUNL	337- 69
CS131E	♦TUNL	344- 98
CS131F	♦TUNL	354- 20
CS131Z	♦TUNL	298- 11
CS220-08	BBCG	478- 64
CS220-10	BBCG	484-107
CS220-12	BBCG	489- 83
CS220-14	BBCG	492- 73
CS220-15	BBCG	493- 27
CS220-16	BBCG	493-110
CS300-08	BBCG	478- 72
CS300-10	BBCG	485- 5
CS300-12	BBCG	489- 90
CS300-14	BBCG	492- 78
CS300-15	BBCG	493- 28
CS300-16	BBCG	494- 4
CS302BA	ITT	302-108
CS302DA	ITT	314- 8
CS302FA	ITT	323- 43
CS302HA	ITT	332-110
CS302KA	ITT	342- 1
CS302MA	ITT	350- 18
CS302PA	ITT	356- 64
CS302RA	ITT	362- 79
CS500-08	BBCG	479- 13
CS500-10	BBCG	485- 55
CS500-12	BBCG	490- 24
CS500-14	BBCG	492- 99
CS500-15	BBCG	493- 37
CS500-16	BBCG	494- 21
CSD2310	ITT	280- 87
CSD2312	ITT	273- 88
CSD2313	ITT	280- 81
CSD2314	ITT	281- 63
CSD2315	ITT	268- 13
CSD2316	ITT	274- 1
CSD2317	ITT	281- 67
CSD2325	ITT	281- 65
CSD2342	ITT	280- 85
CSD2359	ITT	268- 4
CSR5700	ITT	165- 60
CSR5701	ITT	165- 54
CSR5702	ITT	165- 52
CSR5705	ITT	165- 87
CSZ24	HSC	209- 11
CTN50	♦SCN	294-105

Δ-Registered with JEDEC by this manufacturer

♦-Copy of mfr's data sheet may be ordered from D.A.T.A.

1. TYPE No. CROSS INDEX

IN TYPE NUMBER SEQUENCE

TYPE No	MFRS	Pg&Line
CTN100	♦SCN	302- 7
CTN200	♦SCN	313- 9
CTN300	♦SCN	322- 70
CTN400	♦SCN	331-106
CTN500	♦SCN	341- 39
CTN600	♦SCN	349- 19
CTN700	♦SCN	356- 17
CTN800	♦SCN	361- 91
CTN1000	♦SCN	372- 7
CTN1200	♦SCN	378- 81
CTP50	♦SCN	294-106
CTP100	♦SCN	302- 8
CTP200	♦SCN	313- 10
CTP300	♦SCN	322- 71
CTP400	♦SCN	331-107
CTP500	♦SCN	341- 40
CTP573	ITT	246- 16
CTP600	♦SCN	349- 20
CTP700	♦SCN	356- 18
CTP800	♦SCN	361- 92
CTP1000	♦SCN	372- 8
CTP1200	♦SCN	378- 82
CTZC6 8,A,B,D		178- 98
	♦SCN	
CTZC6 8C	♦SCN	178- 99
CTZC6 8E	♦SCN	178-100
CTZC7 5,A,B,D		180-141
	♦SCN	
CTZC7 5C	♦SCN	180-142
CTZC7 5E	♦SCN	180-143
CTZC8 2,A,B,D		183- 9
	♦SCN	
CTZC8 2C	♦SCN	183- 10
CTZC8 2E	♦SCN	183- 11
CTZC9 1,A,B,D		186-125
	♦SCN	
CTZC9 1C	♦SCN	186-126
CTZC9 1E	♦SCN	186-127
CTZC10,A,B,	D♦SCN	189- 23
CTZC10C	♦SCN	189- 24
CTZC10E	♦SCN	189- 25
CTZC11,A,B,	D♦SCN	191- 13
CTZC11C	♦SCN	191- 14
CTZC11E	♦SCN	191- 15
CTZC12,A,B,	D♦SCN	193-113
CTZC12C	♦SCN	193-114
CTZC12E	♦SCN	193-115
CTZC13,A,B,	D♦SCN	195-136
CTZC13C	♦SCN	195-137
CTZC13E	♦SCN	195-138
CTZC14,A,B,	D♦SCN	196-128
CTZC14C	♦SCN	196-129
CTZC14E	♦SCN	196-130
CTZC15,A,B,	D♦SCN	198-113
CTZC15C	♦SCN	198-114
CTZC15E	♦SCN	198-115
CTZC17,A,B,	D♦SCN	201- 58
CTZC17C	♦SCN	201- 59
CTZC17E	♦SCN	201- 60
CTZC18,A,B,	D♦SCN	203- 5
CTZC18C	♦SCN	203- 6
CTZC18E	♦SCN	203- 7
CTZC19,A,B,	D♦SCN	204- 17
CTZC19C	♦SCN	204- 18
CTZC19E	♦SCN	204- 19
CTZC20,A,B,	D♦SCN	205-142
CTZC20C	♦SCN	205-143
CTZC20E	♦SCN	205-144
CTZC22,A,B,	D♦SCN	207-128
CTZC22C	♦SCN	207-129
CTZC22E	♦SCN	207-130
CTZC24,A,B,	D♦SCN	209-103
CTZC24C	♦SCN	209-104
CTZC24E	♦SCN	209-105
CTZC25,A,B,	D♦SCN	210- 63
CTZC25C	♦SCN	210- 64
CTZC25E	♦SCN	210- 65
CTZC27,A,B,	D♦SCN	211-195
CTZC27C	♦SCN	211-196
CTZC27E	♦SCN	211-197
CTZC30,A,B,	D♦SCN	214- 3
CTZC30C	♦SCN	214- 4
CTZC30E	♦SCN	214- 5
CTZC33,A,B,	D♦SCN	215-159
CTZC33C	♦SCN	215-160
CTZC33E	♦SCN	215-161
CTZC36,A,B,	D♦SCN	217- 53
CTZC36C	♦SCN	217- 54
CTZC36E	♦SCN	217- 55
CTZC39,A,B,	D♦SCN	218-130
CTZC39C	♦SCN	218-131
CTZC39E	♦SCN	218-132
CTZC43,A,B,	D♦SCN	220- 22
CTZC43C	♦SCN	220- 23
CTZC43E	♦SCN	220- 24
CTZC45,A,B,	D♦SCN	220-122
CTZC45C	♦SCN	220-123
CTZC45E	♦SCN	220-124
CTZC47,A,B,	D♦SCN	221-152
CTZC47C	♦SCN	221-153
CTZC47E	♦SCN	221-154
CTZC50,A,B,	D♦SCN	222- 93
CTZC50C	♦SCN	222- 94
CTZC50E	♦SCN	222- 95
CTZC51,A,B,	D♦SCN	223- 93
CTZC51C	♦SCN	223- 94
CTZC51E	♦SCN	223- 95
CTZC52,A,B,	D♦SCN	223-176
CTZC52C	♦SCN	223-177
CTZC52E	♦SCN	223-178
CTZC56,A,B,	D♦SCN	225- 1
CTZC56C	♦SCN	225- 2
CTZC56E	♦SCN	225- 3
CTZC62,A,B,	D♦SCN	226-125

TYPE No.	MFRS	Pg&Line
CTZC62C	♦SCN	226-126
CTZC62E	♦SCN	226-127
CTZC68,A,B,	D♦SCN	228- 5
CTZC68C	♦SCN	228- 6
CTZC68E	♦SCN	228- 7
CTZC75,A,B,	D♦SCN	229-101
CTZC75C	♦SCN	229-102
CTZC75E	♦SCN	229-103
CTZC82,A,B,	D♦SCN	230-177
CTZC82C	♦SCN	230-178
CTZC82E	♦SCN	230-179
CTZC91,A,B,	D♦SCN	232-109
CTZC91C	♦SCN	232-110
CTZC91E	♦SCN	232-111
CTZC100,A,B,D		233-163
	♦SCN	
CTZC100C	♦SCN	233-164
CTZC100E	♦SCN	233-165
CTZC105,A,B,D		234-122
	♦SCN	
CTZC105C	♦SCN	234-123
CTZC105E	♦SCN	234-124
CTZC110,A,B,D		235-115
	♦SCN	
CTZC110C	♦SCN	235-116
CTZC110E	♦SCN	235-117
CTZC120,A,B,D		236-147
	♦SCN	
CTZC120C	♦SCN	236-148
CTZC120E	♦SCN	236-149
CTZC130,A,B,D		238- 6
	♦SCN	
CTZC130C	♦SCN	238- 7
CTZC130E	♦SCN	238- 8
CTZC140,A,B,D		238-146
	♦SCN	
CTZC140C	♦SCN	238-147
CTZC140E	♦SCN	238-148
CTZC150,A,B,D		239-160
	♦SCN	
CTZC150C	♦SCN	239-161
CTZC150E	♦SCN	239-162
CTZC160,A,B,D		241- 4
	♦SCN	
CTZC160C	♦SCN	241- 5
CTZC160E	♦SCN	241- 6
CTZC180,A,B,D		242-121
	♦SCN	
CTZC180C	♦SCN	242-122
CTZC180E	♦SCN	242-123
CTZC200,A,B,D		243-158
	♦SCN	
CTZC200C	♦SCN	243-159
CTZC200E	♦SCN	243-160
CV253	AEIL	512-100
CV291	AEIL	510- 36
CV364	AEIL	510- 37
CV425	AEIL	251- 48
CV442	AEIL	247-103
CV448	AEIL	253- 76
CV1844	AEIL	512-101
CV1858B	♦CRY	527-100
CV1858D	♦CRY	527-101
CV1860B	♦CRY	531- 24
CV1860D	♦CRY	531- 25
CV1862B	♦CRY	532-102
CV1862D	♦CRY	532-103
CV1863B	♦CRY	534- 33
CV1863D	♦CRY	534- 34
CV1864B	♦CRY	536- 43
CV1864D	♦CRY	536- 44
CV1865B	♦CRY	539- 16
CV1865D	♦CRY	539- 17
CV1866B	♦CRY	540- 9
CV1866D	♦CRY	540- 10
CV1868B	♦CRY	543- 42
CV1868D	♦CRY	543- 43
CV1870B	♦CRY	544- 81
CV1870D	♦CRY	544- 82
CV1871B	♦CRY	547- 89
CV1871D	♦CRY	547- 90
CV1872B	♦CRY	548- 49
CV1872D	♦CRY	548- 50
CV1873B	♦CRY	549- 50
CV1873D	♦CRY	549- 51
CV2154	AEIL	512-102
CV2155	AEIL	512-103
CV2226	AEIL	517- 87
CV2258	AEIL	517- 88
CV2355	AEIL	517- 89
CV2356	AEIL	517- 90
CV2357	AEIL	517- 91
CV3923	AEIL	510- 38
CV3984	AEIL	510- 39
CV5002	AEIL	512-104
CV5007	♦CRY	536- 45
CV5008	♦CRY	539- 18
CV5010	♦CRY	540- 11
CV5012	♦CRY	543- 44
CV5015	♦CRY	544- 83
CV5018	♦CRY	547- 91
CV5020	♦CRY	548- 51
CV5022	♦CRY	549- 52
CV5027	♦CRY	552- 28
CV5033	♦CRY	553- 45
CV5039	♦CRY	555-108
CV5047	♦CRY	556- 95
CV5056	♦CRY	559- 27
CV5068	♦CRY	560- 19
CV5082	♦CRY	561- 31
CV5100	♦CRY	561-106
CV7108	AEIL	512-105
CV7109	AEIL	512-106
CV7180	AEIL	512- 92

TYPE No.	MFRS	Pg&Line
CV7181	AEIL	517- 93
CV7182	AEIL	517- 94
CV7183	AEIL	517- 95
CV7374	AEIL	518- 53
CV7377	AEIL	512-107
CV7378	AEIL	513- 1
CV7728	AEIL	515- 42
CV7729	AEIL	515- 43
CV7771	AEIL	510- 40
CV7772	AEIL	510- 41
CV8163	AEIL	513- 2
CV8164	AEIL	513- 3
CXY10	♦MULB	520- 8
♦PHIC	♦RADF	
	♦VALG	
CXY11A	♦MULB	594- 65
♦PHIC	RADF	
	♦VALG	
CXY11B	♦MULB	594- 66
♦PHIC	RADF	
	VALG	
CXY11C	♦MULB	594- 67
♦PHIC	RADF	
	VALG	
CXY11D	RADF	594- 68
CXY11E	RADF	594- 69
CXY12	♦MULB	520- 77
♦PHIC	♦VALG	
CXY13D	♦MULB	596- 91
	♦VALG	
CXY13E	♦MULB	596- 92
	VALG	
CXY14A	RADF	594- 70
	♦VALG	
CXY14B	RADF	594- 71
	VALG	
CXY14C	RADF	594- 72
	VALG	
CY40	♦INRI	329- 43
CY50	♦INRI	339- 88
CY80	♦INRI	359- 91
CY100	♦INRI	370- 32
CZ3 3	PWC	167- 56
CZ3 6	PWC	168- 14
CZ3 9	PWC	168-164
CZ4 3	PWC	169-163
CZ4 7	PWC	170-169
CZ5 1	PWC	172- 12
CZ5 6	PWC	173- 79
CZ6.2	PWC	175- 54
CZ6 8	PWC	178- 1
CZ6 8,A,B,D	PWC	178- 2
CZ6 8C	PWC	178- 3
CZ7 5,A,B,D	PWC	180- 48
CZ7 5C	PWC	180- 49
CZ8 2,A,B,D	PWC	182- 95
CZ8 2C	PWC	182- 96
CZ9.1,A,B,D	PWC	186- 28
CZ9 1C	PWC	186- 29
CZ10,A,B,D	PWC	188-107
CZ10C	PWC	188-108
CZ11,A,B,D	PWC	190-101
CZ11C	PWC	190-102
CZ12,A,B,D	PWC	192-176
CZ12C	PWC	192-177
CZ13,A,B,D	PWC	195- 39
CZ13C	PWC	195- 40
CZ14,A,B,D	PWC	196- 82
CZ14C	PWC	196- 83
CZ15,A,B,D	PWC	198- 6
CZ15C	PWC	198- 7
CZ16,A,B,D	PWC	199-175
CZ16C	PWC	199-176
CZ17,A,B,D	PWC	201- 32
CZ17C	PWC	201- 33
CZ18,A,B,D	PWC	202- 99
CZ18C	PWC	202-100
CZ19,A,B,D	PWC	203-170
CZ19C	PWC	203-171
CZ20,A,B,D	PWC	205- 46
CZ20C	PWC	205- 47
CZ22,A,B,D	PWC	207- 25
CZ22C	PWC	207- 26
CZ24,A,B,D	PWC	209- 12
CZ24C	PWC	209- 13
CZ25,A,B,D	PWC	210- 38
CZ25C	PWC	210- 39
CZ27,A,B,D	PWC	211- 89
CZ27C	PWC	211- 90
CZ30,A,B,D	PWC	213- 90
CZ30C	PWC	213- 91
CZ33,A,B,D	PWC	215- 57
CZ33C	PWC	215- 58
CZ36,A,B,D	PWC	216-162
CZ36C	PWC	216-163
CZ39,A,B,D	PWC	218- 60
CZ39C	PWC	218- 61
CZ43,A,B,D	PWC	219-136
CZ43C	PWC	219-137
CZ45,A,B,D	PWC	220- 91
CZ45C	PWC	220- 92
CZ47,A,B,D	PWC	221- 76
CZ47C	PWC	221- 77
CZ50,A,B,D	PWC	222- 60
CZ50C	PWC	222- 61
CZ51,A,B,D	PWC	223- 26
CZ51C	PWC	223- 27
CZ52,A,B,D	PWC	223-155
CZ52C	PWC	223-156
CZ56,A,B,D	PWC	224-104
CZ56C	PWC	224-105
CZ62,A,B,D	PWC	226- 56
CZ62C	PWC	226- 57
CZ68,A,B,D	PWC	227-112

TYPE No.	MFRS	Pg&Line
CZ68C	PWC	227-113
CZ75,A,B,D	PWC	229- 28
CZ75C	PWC	229- 29
CZ82,A,B,D	PWC	230-107
CZ82C	PWC	230-108
CZ91,A,B,D	PWC	232- 45
CZ91C	PWC	232- 46
CZ100,A,B,D	PWC	233- 88
CZ100C	PWC	233- 89
CZ105,A,B,D	PWC	234- 99
CZ105C	PWC	234-100
CZ110,A,B,D	PWC	235- 53
CZ110C	PWC	235- 54
CZ120,A,B,D	PWC	236- 77
CZ120C	PWC	236- 78
CZ130,A,B,D	PWC	237-116
CZ130C	PWC	237-117
CZ140,A,B,D	PWC	238-107
CZ140C	PWC	238-108
CZ150,A,B,D	PWC	239- 92
CZ150C	PWC	239- 93
CZ160,A,B,D	PWC	240-118
CZ160C	PWC	240-119
CZ175,A,B,D	PWC	241-118
CZ175C	PWC	241-119
CZ180,A,B,D	PWC	242- 58
CZ180C	PWC	242- 59
CZ200,A,B,D	PWC	243- 98
CZ200C	PWC	243- 99
CZ220,A,B,D	PWC	244- 37
CZ220C	PWC	244- 38
CZ4097	♦CRL	233-141
CZ4098	♦CRL	239-141
CZ4881	♦CRL	205-121
CZ4883	♦CRL	193- 89
CZ5063	♦CRL	178- 79
CZ5064	♦CRL	180-122
CZ5065	♦CRL	182-175
CZ5066	♦CRL	186-105
CZ5067	♦CRL	188-195
CZ5068	♦CRL	190-183
CZ5069	♦CRL	195-116
CZ5070	♦CRL	196-115
CZ5071	♦CRL	198- 90
CZ5072	♦CRL	200- 63
CZ5073	♦CRL	202-182
CZ5074	♦CRL	207-105
CZ5075	♦CRL	209- 83
CZ5076	♦CRL	211-172
CZ5077	♦CRL	213-168
CZ5078	♦CRL	215-137
CZ5079	♦CRL	217- 33
CZ5080	♦CRL	218-111
CZ5081	♦CRL	218-199
CZ5082	♦CRL	220- 5
CZ5083	♦CRL	220-113
CZ5084	♦CRL	221-133
CZ5085	♦CRL	222- 84
CZ5086	♦CRL	223- 76
CZ5087	♦CRL	224-162
CZ5088	♦CRL	225-124
CZ5089	♦CRL	226-107
CZ5090	♦CRL	227-168
CZ5091	♦CRL	228- 81
CZ5092	♦CRL	229- 81
CZ5093	♦CRL	229-193
CZ5094	♦CRL	230-158
CZ5095	♦CRL	232- 92
CZ5096	♦CRL	235- 98
CZ5097	♦CRL	236-128
CZ5098	♦CRL	237-159
CZ5099	♦CRL	238-134
CZ5100	♦CRL	240-157
CZ5101	♦CRL	241- 64
CZ5102	♦CRL	242-102
CZ5103	♦CRL	243- 5
CZ5104	♦CRL	243-141
CZA6 8D,10,5	DIC	177- 53
CZA7 5D,10,5	DIC	179-105
CZA8 2D,10,5	DIC	181-161
CZA9.1D,10,5	DIC	185- 85
CZA10D,10,5	DIC	187-156
CZA11D,10,5	DIC	189-191
CZA12D,10,5	DIC	192- 36
CZA13D,10,5	DIC	194-118
CZA14D,10,5	DIC	196- 34
CZA15D,10,5	DIC	197- 66
CZA16D,10,5	DIC	199- 68
CZA17D,10,5	DIC	200-179
CZA18D,10,5	DIC	201-150
CZA19D,10,5	DIC	203-123
CZA20D,10,5	DIC	204-121
CZA22D,10,5	DIC	206- 91
CZA24D,10,5	DIC	208- 88
CZA25D,10,5	DIC	209-194
CZA27D,10,5	DIC	210-147
CZA28D,10,5	DIC	212-100
CZA30D,10,5	DIC	212-188
CZA33D,10,5	DIC	214-136
CZA36D,10,5	DIC	216- 84
CZA39D,10,5	DIC	217-157
CZA43D,10,5	DIC	219- 62
CZA47D,10,5	DIC	220-184
CZA51D,10,5	DIC	222-136
CZA56D,10,5	DIC	224- 28
CZA60D,10,5	DIC	225-102
CZA62D,10,5	DIC	225-167
CZA68D,10,5	DIC	227- 37
CZA75D,10,5	DIC	228-137
CZA82D,10,5	DIC	230- 32
CZA87D,10,5	DIC	231- 78
CZA91D,10,5	DIC	231-155
CZA100D,10,5	DIC	233- 11
CZA105D,10,5	DIC	234- 66

TYPE No.	MFRS	Pg&Line
CZA110D,10,5	DIC	234-147
CZA120D,10,5	DIC	236- 9
CZA130D,10,5	DIC	237- 52
CZA140D,10,5	DIC	238- 66
CZA150D,10,5	DIC	239- 23
CZA160D,10,5	DIC	240- 57
CZA175D,10,5	DIC	241- 86
CZA180D,10,5	DIC	241-154
CZA200D,10,5	DIC	243- 34
CZB6.8D,10,5	DIC	177- 54
CZB7.5D,10,5	DIC	179-106
CZB8.2D,10,5	DIC	181-162
CZB9.1D,10,5	DIC	185- 86
CZB10D,10,5	DIC	187-157
CZB11D,10,5	DIC	189-192
CZB12D,10,5	DIC	192- 37
CZB13D,10,5	DIC	194-119
CZB14D,10,5	DIC	196- 35
CZB15D,10,5	DIC	197- 67
CZB16D,10,5	DIC	199- 69
CZB17D,10,5	DIC	200-180
CZB18D,10,5	DIC	201-151
CZB19D,10,5	DIC	203-124
CZB20D,10,5	DIC	204-122
CZB22D,10,5	DIC	206- 92
CZB24D,10,5	DIC	208- 89
CZB25D,10,5	DIC	209-195
CZB27D,10,5	DIC	210-148
CZB30D,10,5	DIC	212-189
CZB33D,10,5	DIC	214-137
CZB36D,10,5	DIC	216- 85
CZB39D,10,5	DIC	217-158
CZB43D,10,5	DIC	219- 63
CZB47D,10,5	DIC	220-185
CZB51D,10,5	DIC	222-137
CZB56D,10,5	DIC	224- 29
CZB62D,10,5	DIC	225-168
CZB68D,10,5	DIC	227- 38
CZB75D,10,5	DIC	228-138
CZB82D,10,5	DIC	230- 33
CZB91D,10,5	DIC	231-156
CZB100D,10,5	DIC	233- 12
CZB105D,10,5	DIC	234- 67
CZB110D,10,5	DIC	234-148
CZB120D,10,5	DIC	236- 10
CZB130D,10,5	DIC	237- 53
CZB140D,10,5	DIC	238- 67
CZB150D,10,5	DIC	239- 24
CZB160D,10,5	DIC	240- 58
CZB175D,10,5	DIC	241- 87
CZB180D,10,5	DIC	241-155
CZB200D,10,5	DIC	243- 35
CZC6 8D,10,5	DIC	177- 55
CZC7.5D,10,5	DIC	179-107
CZC8 2D,10,5	DIC	181-163
CZC9 1D,10,5	DIC	185- 87
CZC10D,10,5	DIC	187-158
CZC11D,10,5	DIC	189- 93
CZC12D,10,5	DIC	192- 38
CZC13D,10,5	DIC	194-120
CZC14D,10,5	DIC	196- 36
CZC15D,10,5	DIC	197- 68
CZC16D,10,5	DIC	199- 70
CZC17D,10,5	DIC	200-181
CZC18D,10,5	DIC	201-152
CZC19D,10,5	DIC	203-125
CZC20D,10,5	DIC	204-123
CZC22D,10,5	DIC	206- 93
CZC24D,10,5	DIC	208- 90
CZC25D,10,5	DIC	209-196
CZC27D,10,5	DIC	210-149
CZC30D,10,5	DIC	212-190
CZC33D,10,5	DIC	214-138
CZC36D,10,5	DIC	216- 86
CZC39D,10,5	DIC	217-159
CZC43D,10,5	DIC	219- 64
CZC47D,10,5	DIC	220-186
CZC51D,10,5	DIC	222-138
CZC56D,10,5	DIC	224- 30
CZC62D,10,5	DIC	225-169
CZC68D,10,5	DIC	227- 39
CZC75D,10,5	DIC	228-139
CZC82D,10,5	DIC	230- 34
CZC91D,10,5	DIC	231-157
CZC100D,10,5	DIC	233- 13
CZC105D,10,5	DIC	234- 68
CZC110D,10,5	DIC	234-149
CZC120D,10,5	DIC	236- 11
CZC130D,10,5	DIC	237- 54
CZC140D,10,5	DIC	238- 68
CZC150D,10,5	DIC	239- 25
CZC160D,10,5	DIC	240- 59
CZC175D,10,5	DIC	241- 88
CZC180D,10,5	DIC	241-156
CZC200D,10,5	DIC	243- 36
CZD6 8D,10,5	DIC	177- 56
CZD7 5D,10,5	DIC	179-108
CZD8 2D,10,5	DIC	181-164
CZD9.1D,10,5	DIC	185- 88
CZD010,-5	ITT	187-159
CZD10D,10,5	DIC	187-160
CZD011,-5	ITT	189-194
CZD11D,10,5	DIC	189-195
CZD012,-5	ITT	192- 39
CZD12D,10,5	DIC	192- 40
CZD013,-5	ITT	194-121
CZD13D,10,5	DIC	194-122
CZD014,-5	ITT	196- 37
CZD14D,10,5	DIC	196- 38
CZD015,-5	ITT	197- 69
CZD15D,10,5	DIC	197- 70
CZD016,-5	ITT	199- 71
CZD16D,10,5	DIC	199- 72
CZD17D,10,5	DIC	200-182

Δ-Registered with JEDEC by this manufacturer

♦-Copy of mfr's data sheet may be ordered from D.A.T.A.

1. TYPE No. CROSS INDEX

IN TYPE NUMBER SEQUENCE

TYPE No.	MFRS	Pg&Line	TYPE No.	MFRS	Pg&Line	TYPE No.	MFRS	Pg&Line	TYPE No.	MFRS	Pg&Line	TYPE No.	MFRS	Pg&Line
CZD018,-5	ITT	201-153	CZG8 2D,10,5	DIC	181-167	D4074A	♦ALP	518-50	D5253B	♦ALP	516-55	D5733	♦ALP	518-48
CZD18D,10,5	DIC	201-154	CZG9.1D,10,5	DIC	185-91	D4081	♦ALP	515-66	D5253C	♦ALP	516-56	D5754	♦ALP	518-25
CZD19D,10,5	DIC	203-126	CZG10D,10,5	DIC	187-163	D4081A	♦ALP	515-67	D5253D	♦ALP	516-57	D5754A	♦ALP	518-26
CZD020,-5	ITT	204-124	CZG12D,10,5	DIC	192-43	D4082	♦ALP	515-68	D5253E	♦ALP	516-58	D5760A	♦ALP	583-53
CZD20D,10,5	DIC	204-125	D1-400	AEGG	286-9	D4082A	♦ALP	515-69	D5254A,B,C	♦ALP	527-13	D5760B	♦ALP	583-54
CZD022,-5	ITT	206-94	D1-600	AEGG	287-68	D4082B	♦ALP	515-70	D5255A,B,C	♦ALP	523-105	D5760C	♦ALP	583-55
CZD22D,10,5	DIC	206-95	D1-800	AEGG	288-9	D4084	ALP	510-18	D5256A,B	♦ALP	523-106	D5760D	♦ALP	583-56
CZD024,-5	ITT	208-91	D1-1000	AEGG	288-65	D4084A	ALP	510-19	D5258	♦ALP	542-67	D5761A	♦ALP	583-57
CZD24D,10,5	DIC	208-92	D6HZ	SOIF	347-38	D4084B	ALP	510-20	D5264,A	♦ALP	529-4	D5761B	♦ALP	583-58
CZD25D,10,5	DIC	210-1	D8HZ	SOIF	360-26	D4121	♦ALP	262-72	D5265,A	ALP	530-41	D5761C	♦ALP	583-59
CZD27D,10,5	DIC	210-150	D13D1	GESY	599-46	D4155	♦ALP	513-4	D5278B	ALP	515-72	D5761D	♦ALP	583-60
CZD28D,10,5	DIC	212-101	D13E1	GESY	599-47	D4160	♦ALP	513-5	D5278C	♦ALP	515-73	D5762A	♦ALP	583-61
CZD30D,10,5	DIC	212-191	D13P1	GESY	499-29	D4180	ALP	510-99	D5278D	♦ALP	515-74	D5762B	♦ALP	583-62
CZD33D,10,5	DIC	214-139	D13Q1	GESY	499-28	D4180C	ALP	510-100	D5282C	♦ALP	515-75	D5762C	♦ALP	583-63
CZD36D,10,5	DIC	216-87	D13T1	♦GESY	499-39	D4180E	ALP	510-101	D5282D	♦ALP	515-76	D5762D	♦ALP	583-64
CZD39D,10,5	DIC	217-160	D13T2	♦GESY	499-40	D4181C	♦ALP	513-6	D5282E	♦ALP	515-77	D5763A	♦ALP	583-65
CZD43D,10,5	DIC	219-65	D15C	SOIF	299-55	D4181D	♦ALP	513-7	D5282F	♦ALP	515-78	D5763B	♦ALP	583-66
CZD47D,10,5	DIC	220-187	D16U3	GESY	246-107	D4181E	♦ALP	513-8	D5282G	♦ALP	515-79	D5763C	♦ALP	583-67
CZD51D,10,5	DIC	222-139	D16U4	GESY	249-79	D4188B	♦ALP	510-102	D5320	♦ALP	583-10	D5763D	♦ALP	583-68
CZD56D,10,5	DIC	224-31	D18	SOIF	300-51	D4188C	♦ALP	510-103	D5320A	♦ALP	583-11	D5784	ALP	594-73
CZD60D,10,5	DIC	225-103	D22-400B	AEGG	335-89	D4188D	♦ALP	510-104	D5320B	♦ALP	583-12	D5784A	ALP	594-74
CZD62D,10,5	DIC	225-170	D22-400C	AEGG	335-90	D4188E	♦ALP	510-105	D5321	♦ALP	583-13	D5784B	ALP	594-75
CZD68D,10,5	DIC	227-40	D22-700B	AEGG	357-52	D4188F	♦ALP	510-106	D5321A	♦ALP	583-14	D5807A	♦ALP	583-69
CZD75D,10,5	DIC	228-140	D22-700C	AEGG	357-53	D4189B	♦ALP	513-9	D5321B	♦ALP	583-15	D5807B	♦ALP	583-70
CZD82D,10,5	DIC	230-35	D22-1100B	AEGG	376-73	D4189C	♦ALP	513-10	D5322	♦ALP	583-16	D5807C	♦ALP	583-71
CZD87D,10,5	DIC	231-79	D22-1100C	AEGG	376-74	D4189D	♦ALP	513-11	D5322A	♦ALP	583-17	D5807D	♦ALP	583-72
CZD91D,10,5	DIC	231-158	D22-1400B	AEGG	382-65	D4189E	♦ALP	513-12	D5322B	♦ALP	583-18	D5807E	♦ALP	583-73
CZD100D,10,5	DIC	233-14	D22-1400C	AEGG	382-66	D4189F	♦ALP	513-13	D5323	♦ALP	583-19	D5817	♦ALP	592-97
CZD105D,10,5	DIC	234-69	D25C	SOIF	310-17	D4194	ALP	518-35	D5323A	♦ALP	583-20	D5817A	♦ALP	592-98
CZD110D,10,5	DIC	234-150	D28	SOIF	311-34	D4194A	ALP	518-36	D5323B	♦ALP	583-21	D5818	♦ALP	592-99
CZD120D,10,5	DIC	236-12	D40H	SOIF	397-33	D4195	ALP	518-42	D5337,A	♦ALP	525-101	D5818A	♦ALP	592-100
CZD130D,10,5	DIC	237-55	D40HL	SOIF	397-34	D4195A	ALP	518-43	D5347	♦ALP	524-77	D5819	♦ALP	592-101
CZD140D,10,5	DIC	238-69	D42-400	AEGG	336-27	D4196	ALP	518-46	D5347A,B	♦ALP	526-2	D5820	♦ALP	583-74
CZD150D,10,5	DIC	239-26	D42-700	AEGG	357-63	D4196A	ALP	518-47	D5353B	ALP	516-59	D5820A	♦ALP	583-75
CZD160D,10,5	DIC	240-60	D42-1100	AEGG	376-79	D4831,A-E	ALP	526-26	D5353C	ALP	516-60	D5820B	♦ALP	583-76
CZD175D,10,5	DIC	241-89	D42-1400	AEGG	382-76	D4940	♦ALP	510-107	D5353D	ALP	516-61	D5820C	♦ALP	583-77
CZD180D,10,5	DIC	241-157	D45C	SOIF	328-84	D4941	♦ALP	513-14	D5353E	ALP	516-62	D5821	♦ALP	583-78
CZD200D,10,5	DIC	243-37	D45CZ	SOIF	330-11	D4942	♦ALP	515-71	D5353F	ALP	516-63	D5821A	♦ALP	583-79
CZE6 8D,10,5	DIC	177-57	D48	SOIF	330-12	D5003	AEIL	342-14	D5357	♦ALP	524-78	D5821B	♦ALP	583-80
CZE7 5D,10,5	DIC	179-109	D50	SCN	293-79	D5010	AEIL	342-87	D5357A,B	♦ALP	526-3	D5821C	♦ALP	583-81
CZE8 2D,10,5	DIC	181-165	D60H	SOIF	401-48	D5012	ALP	517-52	D5371,A,B	♦ALP	524-75	D5822	♦ALP	583-82
CZE9.1D,10,5	DIC	185-89	D60HL	SOIF	401-49	D5020	♦ALP	582-94	D5371C	♦ALP	524-7	D5822A	♦ALP	583-83
CZE10D,10,5	DIC	187-161	D65C	SOIF	346-28	D5020A	♦ALP	582-95	D5371D	♦ALP	523-87	D5822B	♦ALP	583-84
CZE11D,10,5	DIC	189-196	D68	SOIF	347-39	D5020B	♦ALP	582-96	D5391C	♦ALP	514-98	D5822C	♦ALP	583-85
CZE12D,10,5	DIC	192-41	D80H	SOIF	403-101	D5021	♦ALP	582-97	D5392	♦ALP	513-20	D5823	♦ALP	583-86
CZE13D,10,5	DIC	194-123	D80HL	SOIF	403-102	D5021A	♦ALP	582-98	D5392A	♦ALP	513-21	D5823A	♦ALP	583-87
CZE14D,10,5	DIC	196-39	D85C	SOIF	359-43	D5021B	♦ALP	582-99	D5392B	♦ALP	513-22	D5823B	♦ALP	583-88
CZE15D,10,5	DIC	197-71	D88	SOIF	360-27	D5022	♦ALP	582-100	D5434-3,2,1	ALP	535-44	D5823C	♦ALP	583-89
CZE16D,10,5	DIC	199-73	D100	SCN	300-33	D5022A	♦ALP	582-101	D5501	♦ALP	511-6	D5824	♦ALP	583-90
CZE17D,10,5	DIC	200-183	D100-400	AEGG	337-11	D5022B	♦ALP	582-102	D5501A	♦ALP	511-7	D5824A	♦ALP	583-91
CZE18D,10,5	DIC	201-155	D100-700	AEGG	357-106	D5023	♦ALP	582-103	D5501B	♦ALP	511-8	D5824B	♦ALP	583-92
CZE19D,10,5	DIC	203-127	D100-1100	AEGG	376-101	D5023A	♦ALP	582-104	D5501C	♦ALP	511-9	D5824C	♦ALP	583-93
CZE20D,10,5	DIC	204-126	D100-1400	AEGG	383-1	D5023B	♦ALP	582-105	D5503	♦ALP	511-10	D5825A	ALP	583-94
CZE22D,10,5	DIC	206-96	D105C	SOIF	369-97	D5024	♦ALP	582-106	D5503A	♦ALP	511-11	D5825B	ALP	583-95
CZE24D,10,5	DIC	208-93	D108	SOIF	370-69	D5024A	♦ALP	582-107	D5503B	♦ALP	511-12	D5825C	ALP	583-96
CZE25D,10,5	DIC	210-2	D125C	SOIF	377-79	D5024B	♦ALP	582-108	D5503C	♦ALP	511-13	D5826	♦ALP	583-97
CZE27D,10,5	DIC	210-151	D150H	SOIF	408-62	D5026	♦ALP	582-109	D5504A	♦ALP	513-23	D5826A	♦ALP	583-98
CZE30D,10,5	DIC	212-192	D200	SCN	311-9	D5026A	♦ALP	582-110	D5504B	♦ALP	513-24	D5826B	♦ALP	583-99
CZE33D,10,5	DIC	214-140	D200H	SOIF	410-30	D5026B	♦ALP	583-1	D5504C	♦ALP	513-25	D5826C	♦ALP	583-100
CZE36D,10,5	DIC	216-88	D200HL	SOIF	410-31	D5036	♦ALP	517-53	D5506A	♦ALP	513-26	D5827	♦ALP	592-102
CZE39D,10,5	DIC	217-161	D250-400	AEGG	338-1	D5036A	♦ALP	517-54	D5506B	♦ALP	513-27	D5827A	♦ALP	592-103
CZE43D,10,5	DIC	219-66	D250-700	AEGG	358-55	D5046	♦ALP	524-74	D5506C	♦ALP	513-28	D5828	♦ALP	592-104
CZE47D,10,5	DIC	220-188	D250-1100	AEGG	377-27	D5046A	♦ALP	524-6	D5507	♦ALP	515-80	D5828A	♦ALP	592-105
CZE51D,10,5	DIC	222-140	D250-1400	AEGG	383-62	D5046B	ALP	523-85	D5507A	♦ALP	515-81	D5829	♦ALP	592-106
CZE56D,10,5	DIC	224-32	D250H	SOIF	411-38	D5047	♦ALP	525-98	D5507B	♦ALP	515-82	D5829A	♦ALP	592-107
CZE62D,10,5	DIC	225-171	D250HL	SOIF	411-39	D5047A	♦ALP	525-99	D5507C	♦ALP	515-83	D5835	♦ALP	592-108
CZE68D,10,5	DIC	227-41	D300	SCN	321-39	D5047B	♦ALP	525-100	D5509	♦ALP	516-64	D5840	♦ALP	583-101
CZE75D,10,5	DIC	228-141	D300-400	AEGG	338-16	D5047C	♦ALP	524-73	D5509A	♦ALP	516-65	D5841	♦ALP	592-109
CZE82D,10,5	DIC	230-36	D300-700	AEGG	358-64	D5047D	♦ALP	524-5	D5509B	♦ALP	516-66	D5841A	♦ALP	592-110
CZE91D,10,5	DIC	231-159	D300-1100	AEGG	377-32	D5047E	♦ALP	523-75	D5509C	♦ALP	516-67	D5842	♦ALP	593-1
CZE100D,10,5	DIC	233-15	D300-1400	AEGG	383-71	D5047F	♦ALP	523-31	D5509D	ALP	516-68	D5843	♦ALP	593-2
CZE105D,10,5	DIC	234-70	D400	SCN	329-95	D5047G	♦ALP	523-32	D5520	♦ALP	583-22	D5844	♦ALP	593-3
CZE110D,10,5	DIC	234-151	D400-1400	AEGG	383-87	D5090	♦ALP	599-48	D5520A	♦ALP	583-23	D5845	♦ALP	593-4
CZE120D,10,5	DIC	236-13	D400-1600	AEGG	387-62	D5090A	♦ALP	599-49	D5520B	♦ALP	583-24	D5845A	♦ALP	593-5
CZE130D,10,5	DIC	237-56	D400-1800	AEGG	388-106	D5091	♦ALP	511-1	D5521	♦ALP	583-25	D5846	♦ALP	593-6
CZE140D,10,5	DIC	238-70	D400-2000	AEGG	390-99	D5091A	ALP	511-2	D5521A	♦ALP	583-26	D5847	♦ALP	593-7
CZE150D,10,5	DIC	239-27	D400-2200	AEGG	391-45	D5092	♦ALP	513-15	D5521B	♦ALP	583-27	D5847A	♦ALP	593-8
CZE160D,10,5	DIC	240-61	D400-2400	AEGG	391-46	D5092A	♦ALP	513-16	D5522	♦ALP	583-28	D5848	♦ALP	593-9
CZE175D,10,5	DIC	241-90	D400-2600	AEGG	393-3	D5093	♦ALP	517-96	D5522A	♦ALP	583-29	D5848A	♦ALP	593-10
CZE180D,10,5	DIC	241-158	D450-400	AEGG	338-22	D5093A	♦ALP	517-97	D5522B	♦ALP	583-30	D5880	♦ALP	513-31
CZE200D,10,5	DIC	243-38	D450-700	AEGG	358-68	D5109-2	♦ALP	583-2	D5523	♦ALP	583-31	D5880A	♦ALP	513-32
CZF1 8D,10,5	DIC	165-94	D450-1100	AEGG	377-41	D5109-4	♦ALP	583-3	D5523A	♦ALP	583-32	D5880B	♦ALP	513-33
CZF2 0D,10,5	DIC	165-116	D450-1400	AEGG	383-88	D5109-6	♦ALP	583-4	D5523B	♦ALP	583-33	D5880C	♦ALP	513-34
CZF2 2D,10,5	DIC	165-136	D500	SCN	340-13	D5109-8	♦ALP	583-5	D5600	♦ALP	592-95	D5890A	♦ALP	583-102
CZF2 4D,10,5	DIC	165-164	D800	SCN	360-12	D5146,A,B	♦ALP	523-86	D5600A	♦ALP	592-96	D5890B	♦ALP	583-103
CZF2 7D,10,5	DIC	166-33	D1000	SCN	370-56	D5147A,B	♦ALP	527-74	D5615H	ALP	513-29	D5890C	♦ALP	583-104
CZF3 0D,10,5	DIC	166-107	D1003	AEIL	303-21	D5147C	♦ALP	527-12	D5616H	ALP	511-14	D5890D	♦ALP	583-105
CZF3 3D,10,5	DIC	167-2	D1010	AEIL	304-15	D5147D	♦ALP	526-1	D5621H	ALP	511-15	D5890E	♦ALP	583-106
CZF3.6D,10,5	DIC	167-153	D1720,B,C	♦MSI	536-46	D5147E	♦ALP	524-76	D5623H	ALP	513-30	D5905A	♦ALP	515-84
CZF3 9D,10,5	DIC	168-105	D1722,B,C	♦MSI	539-19	D5147F	♦ALP	523-76	D5632	♦ALP	512-11	D5905B	♦ALP	515-85
CZF4 3D,10,5	DIC	169-105	D1724,B,C	♦MSI	540-12	D5147G	♦ALP	523-77	D5632A	♦ALP	512-12	D5905C	ALP	515-86
CZF4 7D,10,5	DIC	170-103	D1726,B,C	♦MSI	543-45	D5151	♦ALP	583-6	D5634	♦ALP	518-27	D5905D	ALP	515-87
CZF5.1D,10,5	DIC	171-150	D1728,B,C	♦MSI	544-84	D5151A	♦ALP	583-7	D5638	♦ALP	518-28	D5910	♦ALP	511-16
CZF5 6D,10,5	DIC	172-191	D1730,B,C	♦MSI	547-92	D5151B	♦ALP	583-8	D5650A	♦ALP	583-34	D5910A	♦ALP	511-17
CZF6 2D,10,5	DIC	174-182	D1732,B,C	♦MSI	548-52	D5167	♦ALP	583-9	D5650B	♦ALP	583-35	D5910B	♦ALP	511-18
CZF6.8D,10,5	DIC	177-58	D1734,B,C	♦MSI	549-53	D5221C	♦ALP	511-3	D5650C	♦ALP	583-36	D5910C	♦ALP	511-19
CZF7 5D,10,5	DIC	179-110	D1736,B,C	♦MSI	552-29	D5221E	♦ALP	511-4	D5650D	♦ALP	583-37	D5940	♦ALP	527-77
CZF8 2D,10,5	DIC	181-166	D1738,B,C	♦MSI	553-46	D5221F	♦ALP	511-5	D5650E	♦ALP	583-38	D5940A	♦ALP	530-69
CZF9.1D,10,5	DIC	185-90	D1740,B,C	♦MSI	555-109	D5223C	♦ALP	513-17	D5668A	♦ALP	583-39	D5940B	♦ALP	532-8
CZF10D,10,5	DIC	187-162	D1742,B,C	♦MSI	556-96	D5223E	♦ALP	513-18	D5668B	♦ALP	583-40	D5940C	♦ALP	533-58
CZF12D,10,5	DIC	192-42	D1744,B,C	♦MSI	559-28	D5223F	♦ALP	513-19	D5668C	♦ALP	583-41	D5940D	♦ALP	534-74
CZG2 4D,10,5	DIC	165-165	D1746,B,C	♦MSI	560-20	D5233	♦ALP	518-52	D5668D	♦ALP	583-42	D5940E	♦ALP	535-25
CZG2 7D,10,5	DIC	166-34	D1748,B,C	♦MSI	561-32	D5236	♦ALP	517-55	D5668E	♦ALP	583-43	D5940F	♦ALP	539-84
CZG3 0D,10,5	DIC	166-108	D1750,B,C	♦MSI	561-107	D5244A-D	♦ALP	523-78	D5669A	♦ALP	583-44	D5940G	♦ALP	544-44
CZG3 3D,10,5	DIC	167-3	D2003	AEIL	314-30	D5244E	♦ALP	523-79	D5669B	♦ALP	583-45	D5940H	♦ALP	548-30
CZG3 6D,10,5	DIC	167-154	D2010	AEIL	315-40	D5244F	♦ALP	523-33	D5669C	♦ALP	583-46	D5940J	♦ALP	552-104
CZG3 9D,10,5	DIC	168-106	D3003	AEIL	323-57	D5244G	♦ALP	523-34	D5669D	♦ALP	583-47	D5950	♦ALP	527-78
CZG4 3D,10,5	DIC	169-106	D3010	AEIL	324-35	D5245A-D	♦ALP	523-80	D5669E	♦ALP	583-48	D5950A	♦ALP	530-70
CZG4 7D,10,5	DIC	170-104	D4003	AEIL	333-23	D5245E	♦ALP	523-81	D5691	♦ALP	518-23	D5950B	♦ALP	532-9
CZG5 1D,10,5	DIC	171-151	D4010	AEIL	334-39	D5245F	♦ALP	523-104	D5691A	♦ALP	518-24	D5950C	♦ALP	533-59
CZG5 6D,10,5	DIC	172-192	D4072	ALP	517-49	D5246A,B,C	♦ALP	523-82	D5720	♦ALP	583-49	D5950D	♦ALP	534-75
CZG6 2D,10,5	DIC	174-183	D4072A	ALP	517-50	D5246D	♦ALP	523-83	D5721	♦ALP	583-50	D5950E	♦ALP	535-26
CZG6 8D,10,5	DIC	177-59	D4072B	ALP	517-51	D5246E	♦ALP	523-84	D5722	♦ALP	583-51	D5950F	♦ALP	539-85
CZG7 5D,10,5	DIC	179-111	D4074	♦ALP	518-49	D5252	♦ALP	516-73	D5723	♦ALP	583-52	D5950G	♦ALP	544-45

Δ-Registered with JEDEC by this manufacturer

♦-Copy of mfr's data sheet may be ordered from D.A.T.A.

1. TYPE No. CROSS INDEX

IN TYPE NUMBER SEQUENCE

TYPE No.	MFRS	Pg&Line
D5950H	♦ALP	548- 31
D5950J	♦ALP	552-105
D5964A	♦ALP	583-107
D5964B	♦ALP	583-108
D5964C	♦ALP	583-109
D5964D	♦ALP	583-110
D5964E	♦ALP	584- 1
D5968	♦ALP	594- 76
D5968A	♦ALP	594- 77
D5968B	♦ALP	594- 78
D5968C	♦ALP	594- 79
D5968D	♦ALP	594- 80
D5968E	♦ALP	594- 81
D5968F	♦ALP	594- 82
D5982A	♦ALP	584- 2
D5982B	♦ALP	584- 3
D5982C	♦ALP	584- 4
D5982D	♦ALP	584- 5
D5982E	♦ALP	584- 6
D5994A	♦ALP	584- 7
D5994B	♦ALP	584- 8
D5994C	♦ALP	584- 9
D5994D	♦ALP	584- 10
D5994E	♦ALP	584- 11
D6003	AEIL	350- 41
D6010	AEIL	351- 52
D6900	KSC	533- 80
D6901	KSC	534-107
D6902	KSC	536- 47
D6903	KSC	539- 20
D6904	KSC	540- 13
D6905	KSC	543- 46
D6906	KSC	544- 85
D6907	KSC	547- 93
D6908	KSC	548- 53
D6909	KSC	549- 54
D6910	♦ALP	552- 30
	KSC	
D6911	♦ALP	553- 47
	KSC	
D8003	AEIL	362- 97
D8010	AEIL	363- 89
D9011	♦ALP	584- 12
D9011A	♦ALP	584- 13
D9011B	♦ALP	584- 14
D9011C	♦ALP	584- 15
D9011D	♦ALP	584- 16
D9011E	♦ALP	584- 17
D9012	♦ALP	584- 18
D9012A	♦ALP	584- 19
D9012B	♦ALP	584- 20
D9012C	♦ALP	584- 21
D9012D	♦ALP	584- 22
D9012E	♦ALP	584- 23
D9013	♦ALP	584- 24
D9013A	♦ALP	584- 25
D9013B	♦ALP	584- 26
D9013C	♦ALP	584- 27
D9013D	♦ALP	584- 28
D9013E	♦ALP	584- 29
D9014	♦ALP	584- 30
D9014A	♦ALP	584- 31
D9014B	♦ALP	584- 32
D9014C	♦ALP	584- 33
D9014D	♦ALP	584- 34
D9014E	♦ALP	584- 35
DA000	LUCB	298- 37
DA001	LUCB	299- 56
DA1-200	AEGG	283- 65
DA1-400	AEGG	286- 10
DA1-600	AEGG	287- 69
DA002	LUCB	307- 67
DA4	SOIF	599- 50
DA006	LUCB	331- 70
DA058	LUCB	359- 44
DA711	LUCB	305- 44
DA716	LUCB	335- 98
DA776	LUCB	335- 91
DA777	LUCB	352- 75
DA778	LUCB	364- 85
DA1701	♦GESY	253- 62
DA1702	♦GESY	252- 24
DA1703	♦GESY	248-104
DA1704	♦GESY	247- 48
DA2026	LUCB	335- 85
DA2068	LUCB	360- 72
DB776	LUCB	335- 92
DB777	LUCB	352- 76
DB778	LUCB	364- 86
DC1017	AEIL	559- 77
DC1018	AEIL	562- 66
DC1019	AEIL	562-108
DC1100-01	AEIL	594- 83
DC1100-03	AEIL	594- 84
DC1100-05	AEIL	594- 85
DC1100-10	AEIL	594- 86
DC1100-20	AEIL	594- 87
DC1201A	AEIL	594- 88
DC1201B	AEIL	594- 89
DC1201C	AEIL	594- 90
DC1201D	AEIL	594- 91
DC1201E	AEIL	594- 92
DC1201F	AEIL	594- 93
DC1202A	AEIL	594- 94
DC1202B	AEIL	594- 95
DC1202C	AEIL	594- 96
DC1202D	AEIL	594- 97
DC1301	AEIL	513- 35
DC1301A	AEIL	515- 88
DC1302	AEIL	513- 36
DC1304	AEIL	513- 37
DC1501	AEIL	513- 38
DC1502	AEIL	513- 39
DC1504	AEIL	513- 40

TYPE No.	MFRS	Pg&Line
DC3010	AEIL	517- 98
DC3011	AEIL	518- 40
DC3012	AEIL	517- 99
DC3012S	AEIL	517- 12
DC3014	AEIL	517-100
DC4021A00,01,02	AEIL	521-107
DC4021B00,01,02	AEIL	521-108
DC4021C00,01,02	AEIL	521-109
DC4021D00,01,02	AEIL	521-110
DC4021E00,01,02	AEIL	522- 1
DC4021F00,01,02	AEIL	522- 2
DC4021G00,01,02	AEIL	522- 3
DC4021H00,01,02	AEIL	522- 4
DC4021J00,01,02	AEIL	522- 5
DC4021K00,01,02	AEIL	522- 6
DC4021L00,01,02	AEIL	522- 7
DC4021M00,01,02	AEIL	522- 8
DC4021N00,01,02	AEIL	522- 9
DC4021P00,01,02	AEIL	522- 10
DC4022A00,01,02	AEIL	524- 51
DC4022B00,01,02	AEIL	524- 52
DC4022C00,01,02	AEIL	524- 53
DC4022D00,01,02	AEIL	524- 54
DC4022E00,01,02	AEIL	524- 55
DC4022F00,01,02	AEIL	524- 56
DC4022G00,01,02	AEIL	524- 57
DC4022H00,01,02	AEIL	524- 58
DC4022J00,01,02	AEIL	524- 59
DC4022K00,01,02	AEIL	524- 60
DC4022L00,01,02	AEIL	524- 61
DC4023A00,01,02	AEIL	528- 51
DC4023B00,01,02	AEIL	528- 52
DC4023C00,01,02	AEIL	528- 53
DC4023D00,01,02	AEIL	528- 54
DC4023E00,01,02	AEIL	528- 55
DC4023F00,01,02	AEIL	528- 56
DC4023G00,01,02	AEIL	528- 57
DC4023H00,01,02	AEIL	528- 58
DC4023J00,01,02	AEIL	528- 59
DC4031A00,01,02	AEIL	522- 11
DC4031B00,01,02	AEIL	522- 12
DC4031C00,01,02	AEIL	522- 13
DC4031D00,01,02	AEIL	522- 14
DC4031E00,01,02	AEIL	522- 15
DC4031F00,01,02	AEIL	522- 16
DC4031G00,01,02	AEIL	522- 17
DC4031H00,01,02	AEIL	522- 18
DC4031J00,01,02	AEIL	522- 19
DC4031K00,01,02	AEIL	522- 20
DC4031L00,01,02	AEIL	522- 21
DC4031M00,01,02	AEIL	522- 22
DC4032A00,01,02	AEIL	524-110
DC4032B00,01,02	AEIL	525- 1
DC4032C00,01,02	AEIL	525- 2
DC4032D00,01,02	AEIL	525- 3
DC4032E00,01,02	AEIL	525- 4
DC4032F00,01,02	AEIL	525- 5
DC4032G00,01,02	AEIL	525- 6
DC4032H00,01,02	AEIL	525- 7

TYPE No.	MFRS	Pg&Line
DC4032J00,01,02	AEIL	525- 8
DC4032K00,01,02	AEIL	525- 9
DC4032L00,01,02	AEIL	525- 10
DC4033A00,01,02	AEIL	528- 60
DC4033B00,01,02	AEIL	528- 61
DC4033C00,01,02	AEIL	528- 62
DC4033D00,01,02	AEIL	528- 63
DC4033E00,01,02	AEIL	528- 64
DC4033F00,01,02	AEIL	528- 65
DC4033G00,01,02	AEIL	528- 66
DC4033H00,01,02	AEIL	528- 67
DC4033J00,01,02	AEIL	528- 68
DC4034A00,01,02	AEIL	531- 56
DC4034B00,01,02	AEIL	531- 57
DC4034C00,01,02	AEIL	531- 58
DC4034D00,01,02	AEIL	531- 59
DC4034E00,01,02	AEIL	531- 60
DC4041A00,01,02	AEIL	522- 23
DC4041B00,01,02	AEIL	522- 24
DC4041C00,01,02	AEIL	522- 25
DC4041D00,01,02	AEIL	522- 26
DC4041E00,01,02	AEIL	522- 27
DC4041F00,01,02	AEIL	522- 28
DC4041G00,01,02	AEIL	522- 29
DC4041H00,01,02	AEIL	522- 30
DC4041J00,01,02	AEIL	522- 31
DC4041K00,01,02	AEIL	522- 32
DC4041L00,01,02	AEIL	522- 33
DC4042A00,01,02	AEIL	525- 11
DC4042B00,01,02	AEIL	525- 12
DC4042C00,01,02	AEIL	525- 13
DC4042D00,01,02	AEIL	525- 14
DC4042E00,01,02	AEIL	525- 15
DC4042F00,01,02	AEIL	525- 16
DC4042G00,01,02	AEIL	525- 17
DC4042H00,01,02	AEIL	525- 18
DC4042J00,01,02	AEIL	525- 19
DC4042K00,01,02	AEIL	525- 20
DC4042L00,01,02	AEIL	525- 21
DC4043A00,01,02	AEIL	528- 69
DC4043B00,01,02	AEIL	528- 70
DC4043C00,01,02	AEIL	528- 71
DC4043D00,01,02	AEIL	528- 72
DC4043E00,01,02	AEIL	528- 73
DC4043F00,01,02	AEIL	528- 74
DC4043G00,01,02	AEIL	528- 75
DC4043H00,01,02	AEIL	528- 76
DC4043J00,01,02	AEIL	528- 77
DC4044A00,01,02	AEIL	531- 61
DC4044B00,01,02	AEIL	531- 62
DC4044C00,01,02	AEIL	531- 63
DC4044D00,01,02	AEIL	531- 64
DC4045A00,01,02	AEIL	534- 6
DC4045B00,01,02	AEIL	534- 7
DC4051A00,01,02	AEIL	522- 34
DC4051B00,01,02	AEIL	522- 35
DC4051C00,01,02	AEIL	522- 36

TYPE No.	MFRS	Pg&Line
DC4051D00,01,02	AEIL	522- 37
DC4051E00,01,02	AEIL	522- 38
DC4051F00,01,02	AEIL	522- 39
DC4051G00,01,02	AEIL	522- 40
DC4051H00,01,02	AEIL	522- 41
DC4051J00,01,02	AEIL	522- 42
DC4051K00,01,02	AEIL	522- 43
DC4051L00,01,02	AEIL	522- 44
DC4052A00,01,02	AEIL	525- 22
DC4052B00,01,02	AEIL	525- 23
DC4052C00,01,02	AEIL	525- 24
DC4052D00,01,02	AEIL	525- 25
DC4052E00,01,02	AEIL	525- 26
DC4052F00,01,02	AEIL	525- 27
DC4052G00,01,02	AEIL	525- 28
DC4052H00,01,02	AEIL	525- 29
DC4052J00,01,02	AEIL	525- 30
DC4053A00,01,02	AEIL	528- 78
DC4053B00,01,02	AEIL	528- 79
DC4053C00,01,02	AEIL	528- 80
DC4053D00,01,02	AEIL	528- 81
DC4053E00,01,02	AEIL	528- 82
DC4053F00,01,02	AEIL	528- 83
DC4054A00,01,02	AEIL	531- 65
DC4054B00,01,02	AEIL	531- 66
DC4054C00,01,02	AEIL	531- 67
DC4054D00,01,02	AEIL	531- 68
DC4061A00,01,02	AEIL	522- 45
DC4061B00,01,02	AEIL	522- 46
DC4061C00,01,02	AEIL	522- 47
DC4061D00,01,02	AEIL	522- 48
DC4061E00,01,02	AEIL	522- 49
DC4061F00,01,02	AEIL	522- 50
DC4061G00,01,02	AEIL	522- 51
DC4061H00,01,02	AEIL	522- 52
DC4061J00,01,02	AEIL	522- 53
DC4062A00,01,02	AEIL	525- 31
DC4062B00,01,02	AEIL	525- 32
DC4062C00,01,02	AEIL	525- 33
DC4062D00,01,02	AEIL	525- 34
DC4062E00,01,02	AEIL	525- 35
DC4062F00,01,02	AEIL	525- 36
DC4063A00,01,02	AEIL	528- 84
DC4063B00,01,02	AEIL	528- 85
DC4063C00,01,02	AEIL	528- 86
DC4063D00,01,02	AEIL	528- 87
DC4063E00,01,02	AEIL	528- 88
DC4064A00,01,02	AEIL	531- 69
DC4064B00,01,02	AEIL	531- 70
DC4064C00,01,02	AEIL	531- 71
DC4121A01,02	AEIL	522- 54
DC4121B01,02	AEIL	522- 55
DC4121C01,02	AEIL	522- 56
DC4121D01,02	AEIL	522- 57
DC4121E01,02	AEIL	522- 58
DC4121F01,02	AEIL	522- 59
DC4121G01,02	AEIL	522- 60
DC4121H01,02	AEIL	522- 61
DC4121J01,02	AEIL	522- 62
DC4121K01,02	AEIL	522- 63
DC4121L01,02	AEIL	522- 64
DC4121M01,02	AEIL	522- 65
DC4121N01,02	AEIL	522- 66
DC4121P01,02	AEIL	522- 67

TYPE No.	MFRS	Pg&Line
DC4122A01,02	AEIL	525- 37
DC4122B01,02	AEIL	525- 38
DC4122C01,02	AEIL	525- 39
DC4122D01,02	AEIL	525- 40
DC4122E01,02	AEIL	525- 41
DC4122F01,02	AEIL	525- 42
DC4122G01,02	AEIL	525- 43
DC4122H01,02	AEIL	525- 44
DC4122J01,02	AEIL	525- 45
DC4122K01,02	AEIL	525- 46
DC4122L01,02	AEIL	525- 47
DC4122M01,02	AEIL	525- 48
DC4131A01,02	AEIL	522- 68
DC4131B01,02	AEIL	522- 69
DC4131C01,02	AEIL	522- 70
DC4131D01,02	AEIL	522- 71
DC4131E01,02	AEIL	522- 72
DC4131F01,02	AEIL	522- 73
DC4131G01,02	AEIL	522- 74
DC4131H01,02	AEIL	522- 75
DC4131J01,02	AEIL	522- 76
DC4131K01,02	AEIL	522- 77
DC4131L01,02	AEIL	522- 78
DC4131M01,02	AEIL	522- 79
DC4132A01,02	AEIL	525- 49
DC4132B01,02	AEIL	525- 50
DC4132C01,02	AEIL	525- 51
DC4132D01,02	AEIL	525- 52
DC4132E01,02	AEIL	525- 53
DC4132F01,02	AEIL	525- 54
DC4132G01,02	AEIL	525- 55
DC4132H01,02	AEIL	525- 56
DC4132J01,02	AEIL	525- 57
DC4132K01,02	AEIL	525- 58
DC4132L01,02	AEIL	525- 59
DC4132M01,02	AEIL	525- 60
DC4141A01,02	AEIL	522- 80
DC4141B01,02	AEIL	522- 81
DC4141C01,02	AEIL	522- 82
DC4141D01,02	AEIL	522- 83
DC4141E01,02	AEIL	522- 84
DC4141F01,02	AEIL	522- 85
DC4141G01,02	AEIL	522- 86
DC4141H01,02	AEIL	522- 87
DC4141J01,02	AEIL	522- 88
DC4141K01,02	AEIL	522- 89
DC4141L01,02	AEIL	522- 90
DC4141M01,02	AEIL	522- 91
DC4142A01,02	AEIL	525- 61
DC4142B01,02	AEIL	525- 62
DC4142C01,02	AEIL	525- 63
DC4142D01,02	AEIL	525- 64
DC4142E01,02	AEIL	525- 65
DC4142F01,02	AEIL	525- 66
DC4142G01,02	AEIL	525- 67
DC4142H01,02	AEIL	525- 68
DC4142J01,02	AEIL	525- 69
DC4142K01,02	AEIL	525- 70
DC4142L01,02	AEIL	525- 71
DC4151A01,02	AEIL	522- 92
DC4151B01,02	AEIL	522- 93
DC4151C01,02	AEIL	522- 94
DC4151D01,02	AEIL	522- 95
DC4151E01,02	AEIL	522- 96
DC4151F01,02	AEIL	522- 97
DC4151G01,02	AEIL	522- 98
DC4151H01,02	AEIL	522- 99
DC4151J01,02	AEIL	522-100
DC4151K01,02	AEIL	522-101
DC4151L01,02	AEIL	522-102
DC4152A01,02	AEIL	525- 72
DC4152B01,02	AEIL	525- 73
DC4152C01,02	AEIL	525- 74
DC4152D01,02	AEIL	525- 75
DC4152E01,02	AEIL	525- 76
DC4152F01,02	AEIL	525- 77
DC4152G01,02	AEIL	525- 78
DC4152H01,02	AEIL	525- 79
DC4152J01,02	AEIL	525- 80
DC4161A01,02	AEIL	522-103
DC4161B01,02	AEIL	522-104
DC4161C01,02	AEIL	522-105
DC4161D01,02	AEIL	522-106
DC4161E01,02	AEIL	522-107
DC4161F01,02	AEIL	522-108
DC4161G01,02	AEIL	522-109
DC4161H01,02	AEIL	522-110
DC4161J01,02	AEIL	523- 1
DC4162A01,02	AEIL	525- 81
DC4162B01,02	AEIL	525- 82
DC4162C01,02	AEIL	525- 83
DC4162D01,02	AEIL	525- 84
DC4162E01,02	AEIL	525- 85
DC4162F01,02	AEIL	525- 86
DC4201	AEIL	530- 71
DC4202	AEIL	527- 79
DC4210	AEIL	536- 48
DC4211	AEIL	539- 21
DC4212	AEIL	540- 14
DC4213	AEIL	543- 47
DC4214	AEIL	544- 86
DC4215	AEIL	547- 94
DC4216	AEIL	549- 55
DC4217	AEIL	552- 31
DC4220	AEIL	547- 95
DC4221	AEIL	549- 56
DC4222	AEIL	552- 32
DC4223	AEIL	553- 48
DC4224	AEIL	555-110
DC4225	AEIL	556- 97
DC4226	AEIL	559- 29
DC4230	AEIL	560- 21
DC4231	AEIL	561- 33
DC4232	AEIL	561-108

Δ-Registered with JEDEC by this manufacturer

♦-Copy of mfr's data sheet may be ordered from D.A.T.A.

1. TYPE No. CROSS INDEX

IN TYPE NUMBER SEQUENCE

TYPE No.	MFRS	Pg&Line	TYPE No.	MFRS	Pg&Line	TYPE No.	MFRS	Pg&Line	TYPE No.	MFRS	Pg&Line	TYPE No.	MFRS	Pg&Line
DC4233	AEIL	562- 61	DI6X4	DII	385-105	DPZ30-43R	♦DEL	220-156	DRS166	♦DEL	353- 83	DSA42-16A	BBCG	386- 82
DC4234	AEIL	562- 67	DI55	DII	339-102	DPZ30-45R	♦DEL	222- 39	DRS167	♦DEL	357-107	DSA42-18A	BBCG	388- 64
DC4235	AEIL	562- 86	DI71	DII	301- 23	DPZ30-47R	♦DEL	222-123	DRS168	♦DEL	365- 91	DSA110-11A	BBCG	376-100
DC4240	AEIL	562- 68	DI515	DII	384- 45	DPZ30-50R	♦DEL	223-195	DRS169	♦DEL	368- 38	DSA110-14A	BBCG	382-108
DC4241	AEIL	562- 87	DI515LS	DII	384- 59	DR128	GIC	253- 18	DRS203	♦DEL	326- 28	DSA110-16A	BBCG	386-102
DC4242	AEIL	562- 94	DI520	DII	389- 94	DR207	GIC	253- 16	DRS204	♦DEL	337- 28	DSA110-18A	BBCG	388- 68
DC4243	AEIL	563- 6	DI520LS	DII	390- 4	DR209	GIC	255- 85	DRS205	♦DEL	344- 65	DSA250-11L	BBCG	377- 22
DC4244	AEIL	563- 13	DI525	DII	392- 50	DR211	GIC	276- 87	DRS206	♦DEL	353- 96	DSA250-14L	BBCG	383- 55
DC4245	AEIL	563- 25	DI530	DII	394- 34	DR213	GIC	253- 23	DRS207	♦DEL	358- 6	DSA250-17L	BBCG	387- 91
DC4253	AEIL	527-102	DI530LS	DII	394- 46	DR272	GIC	256- 78	DRS208	♦DEL	365-103	DSA250-20L	BBCG	390- 74
DC4254	AEIL	529- 7	DI540	DII	396-104	DR283	GIC	253- 19	DRS209	♦DEL	368- 46	DSA250-23L	BBCG	391- 52
DC4255	AEIL	531- 26	DI540LS	DII	397- 29	DR291	GIC	251-108	DRS243	♦DEL	326- 52	DSA400-11L	BBCG	377- 30
DC4256	AEIL	532-104	DI550	DII	399- 53	DR292	GIC	255- 88	DRS244	♦DEL	337- 59	DSA400-14L	BBCG	383- 69
DC4257	AEIL	534- 35	DI550LS	DII	399- 83	DR295	GIC	276- 97	DRS245	♦DEL	344- 89	DSA400-17L	BBCG	387- 98
DD10	♦SCO	260- 61	DI560	DII	401- 10	DR301	GIC	256- 43	DRS246	♦DEL	354- 10	DSA400-20L	BBCG	390- 84
DD10A	♦SCO	260- 62	DI560LS	DII	401- 31	DR302	GIC	254- 84	DRS247	♦DEL	358- 16	DSA400-23L	BBCG	391- 54
DD20	♦SCO	261- 14	DI570	DII	402- 44	DR303	GIC	253- 28	DRS248	♦DEL	366- 14	DSH6172	♦ALP	593- 11
DD20A	♦SCO	261- 15	DI570LS	DII	402- 40	DR304	GIC	257- 94	DRS249	♦DEL	368- 55	DSH6173	♦ALP	593- 12
DD30	♦SCO	261- 38	DI580	DII	403- 75	DR305	GIC	256- 11	DRS250	♦DEL	366- 11	DSJ6110	♦ALP	584- 36
DD30A	♦SCO	261- 39	DI580LS	DII	403- 79	DR306	GIC	254- 81	DRS251	♦DEL	375- 54	DSJ6111	♦ALP	584- 37
DD40	♦SCO	261- 50	DI590	DII	404- 75	DR307	GIC	253- 25	DRS252	♦DEL	380- 52	DSJ6112	♦ALP	584- 38
DD40A	♦SCO	261- 51	DI590LS	DII	404- 71	DR308	GIC	254- 82	DRS253	♦DEL	383- 18	DSR1062	♦TRW	272- 22
DD2020	LUCB	294-104	DI645	DII	318- 97	DR309	GIC	254- 85	DRS254	♦DEL	387- 3	DSR1063	♦TRW	278- 82
DD2026	LUCB	331-104	DI646	DII	321- 50	DR310	GIC	256- 73	DRZ4300R	DEL	599- 53	DSR1064	♦TRW	282- 33
DD2066	LUCB	330- 58	DI647	DII	330- 4	DR311	GIC	256- 74	DSO 5A1	BBCG	348- 51	DSR1065	♦TRW	284- 28
DD2068	LUCB	360- 73	DI648	DII	340- 23	DR312	GIC	255-100	DSO 5A2	BBCG	367- 15	DSR1066	♦TRW	285- 69
DD2320	♦LUCB	294- 66	DI649	DII	347- 35	DR313	GIC	254- 78	DSO 5A3	BBCG	378- 44	DSR1067	♦TRW	286- 49
DD2321	♦LUCB	301- 60	DI650	DII	360- 25	DR314	GIC	252-100	DSO 5A4	BBCG	384- 88	DSR1068	♦TRW	287- 8
DD2323	♦LUCB	312- 60	DI705	DII	294- 33	DR315	GIC	256- 69	DSO.9-04A	BBCG	330- 33	DSR1069	♦TRW	287- 82
DD2326	♦LUCB	331- 42	DI815C	DII	384- 73	DR316	GIC	255- 89	DSO 9-07A	BBCG	355- 66	DSR1081	♦TRW	271- 85
DD2327	LUCB	348- 65	DI820C	DII	390- 13	DR317	GIC	254- 75	DSO 9-11A	BBCG	376- 34	DSR1082	♦TRW	278- 25
DD3020	LUCB	295- 41	DI830C	DII	394- 57	DR318	GIC	253- 20	DSO 9-14A	BBCG	382- 12	DSR1084	♦TRW	271-103
DD3026	LUCB	332- 66	DI840C	DII	397- 28	DR319	GIC	253- 21	DSO 9-16A	BBCG	386- 19	DSR1085	♦TRW	278- 56
DD3076	LUCB	332- 63	DI850C	DII	399- 87	DR321	GIC	256- 12	DSO.9-18A	BBCG	388- 18	DSR1086	♦TRW	281- 6
DD3078	LUCB	362- 32	DI860C	DII	401- 44	DR322	GIC	255-101	DS1-600B	BBCG	376- 47	DSR1087	♦TRW	282- 7
DD4020	LUCB	296- 4	DI866	DII	406- 8	DR323	GIC	254- 79	DS1 2-04A	BBCG	331- 47	DSR1088	♦TRW	283- 94
DD4026	LUCB	333- 74	DI866A	DII	406- 9	DR324	GIC	254- 80	DS1 2-07A	BBCG	355-104	DSR1115	TRW	280-109
DD4066	LUCB	333- 75	DI870C	DII	402- 48	DR325	GIC	255-102	DS1.2-11A	BBCG	376- 41	DSR1135	TRW	284- 74
DD4068	LUCB	363- 24	DI880C	DII	403- 92	DR326	GIC	253- 24	DS1 2-14A	BBCG	382- 25	DSR1201	TRW	301- 36
DD4520	LUCB	296- 38	DI890C	DII	404- 83	DR327	GIC	256- 39	DS1 2-16A	BBCG	386- 33	DSR1203	TRW	322- 8
DD4521	LUCB	303-109	DI5100	DII	406- 2	DR328	GIC	254- 83	DS1 2-18A	BBCG	388- 30	DSR1205	TRW	340- 88
DD4523	LUCB	315- 20	DI5100LS	DII	405- 86	DR329	GIC	253- 27	DS1 2A12	BBCG	378- 45	DSR1315	TRW	280-104
DD4526	LUCB	334- 20	DI5150LS	DII	408- 39	DR330	GIC	253- 8	DS1 2A15	BBCG	384- 89	DSR1335	TRW	284- 73
DD7120	♦LUCB	297- 20	DI5200LS	DII	410- 5	DR336	GIC	254- 72	DS1.2A6	BBCG	348- 52	DSR2050	TRW	271- 90
DD7121	♦LUCB	305- 15	DI5250LS	DII	411- 16	DR337	GIC	254- 73	DS1 2A9	BBCG	367- 16	DSR2100	TRW	278- 38
DD7123	♦LUCB	316- 57	DI8100C	DII	406- 5	DR338	GIC	253- 17	DS2-04A	BBCG	332- 58	DSR2150	TRW	280-110
DD7126	♦LUCB	335- 60	DI8150C	DII	408- 52	DR351	GIC	250- 90	DS2-07A	BBCG	356- 35	DSR3050	TRW	271- 86
DD 000	LUCB	293- 35	DICR1	♦DIC	370- 26	DR352	GIC	250- 85	DS2-11A	BBCG	376- 49	DSR3051	♦TRW	271-104
DD 003	LUCB	310- 40	DICR2	♦DIC	389- 96	DR362	GIC	273- 89	DS2-14A	BBCG	382- 35	DSR3100	TRW	278- 26
DD 006	LUCB	328-109	DICR3	♦DIC	394- 21	DR365	GIC	248- 4	DS2-16A	BBCG	386- 43	DSR3101	♦TRW	278- 57
DD 056	♦LUCB	328-104	DICR4	♦DIC	396-100	DR366	GIC	253- 22	DS2-18A	BBCG	388- 38	DSR3150	TRW	280-106
DD 058	♦LUCB	359- 58	DICR5	♦DIC	399- 48	DR379	GIC	256- 13	DS2B9	BBCG	367- 24	DSR3151	♦TRW	281- 7
DD 236	LUCB	329- 63	DICR6	♦DIC	401- 2	DR385	GIC	249-104	DS6-04A	BBCG	333- 63	DSR5050	TRW	271- 87
DD 266	LUCB	329- 64	DICR7	♦DIC	402- 29	DR389	GIC	253- 26	DS6-07A	BBCG	356- 75	DSR5051	♦TRW	271-105
DD 268	LUCB	359- 38	DICR8	♦DIC	403- 65	DR401	GIC	276- 93	DS6-11A	BBCG	376- 59	DSR5052	♦TRW	272- 3
DD 710	LUCB	297- 39	DICR9	♦DIC	404- 67	DR402	GIC	279- 87	DS6-14A	BBCG	382- 48	DSR5100	TRW	278- 27
DD 711	LUCB	305- 38	DICR10	♦DIC	405- 69	DR403	GIC	276- 88	DS6-16A	BBCG	386- 60	DSR5101	♦TRW	278- 58
DD 713	LUCB	316- 81	DICR11	♦DIC	406- 69	DR404	GIC	276- 89	DS6-18A	BBCG	388- 49	DSR5102	♦TRW	278- 62
DD 716	LUCB	335- 86	DICR12	♦DIC	407- 16	DR407	GIC	276- 94	DS9-04A	BBCG	334- 13	DSR5150	TRW	280-107
DE1712A	♦MSI	528- 44	DICR13	♦DIC	407- 62	DR408	GIC	276- 90	DS9-07A	BBCG	356-110	DSR5200	TRW	281- 90
DE1714A	♦MSI	531- 27	DICR14	♦DIC	407- 91	DR418	GIC	276- 95	DS9-11A	BBCG	376- 63	DSR5201	♦TRW	282- 8
DE1716A	♦MSI	532- 11	DICR15	♦DIC	408- 30	DR419	GIC	269- 82	DS9-14A	BBCG	382- 52	DSR5202	♦TRW	282- 15
DE1717A	♦MSI	533- 35	DIS1	DII	246- 50	DR422	GIC	276- 91	DS9-16A	BBCG	386- 64	DSR5301	♦TRW	284- 13
DE1718A	♦MSI	533-108	DIS1S	DII	246- 51	DR426	GIC	250- 58	DS9-18A	BBCG	388- 53	DSR5302	♦TRW	284- 16
DE1719A	♦MSI	535- 8	DK003	AEIL	372-103	DR427	GIC	247- 26	DS11	TSAJ	307-104	DSR5401	♦TRW	284-104
DE1720A	♦MSI	536- 49	DK010	AEIL	373- 70	DR434	GIC	249- 65	DS22-04A	BBCG	335- 31	DSR5402	♦TRW	284-107
DE1722A	♦MSI	539- 22	DK13	ITTB	272-101	DR435	GIC	247- 12	DS22-07A	BBCG	357- 40	DSR5601	♦TRW	286- 75
DE1724A	♦MSI	540- 15	DK14	ITTB	252- 64	DR437	GIC	276- 96	DS22-11A	BBCG	376- 69	DSR5602	♦TRW	286- 76
DE1726A	♦MSI	543- 48	DK15	ITTB	280- 11	DR449	GIC	248- 8	DS22-14A	BBCG	382- 60	DSR6050	TRW	271- 88
DEP1712A	♦MSI	528- 45	DK19	ITTB	247- 61	DR459	GIC	265- 51	DS22-16A	BBCG	386- 74	DSR6051	♦TRW	272- 23
DEP1714A	♦MSI	531- 28	DK20	ITTB	251-109	DR463	GIC	253- 9	DS22-18A	BBCG	388- 60	DSR6100	TRW	278- 28
DEP1716A	♦MSI	532- 12	DK21	ITTB	246- 25	DR464	GIC	246- 64	DS31	TSAJ	581- 93	DSR6101	♦TRW	278- 83
DEP1717A	♦MSI	533- 36	DK750	TEK	293- 80	DR481	GIC	274- 2	DS42-04A	BBCG	336- 1	DSR6150	TRW	280-108
DEP1718A	♦MSI	533-109	DK751	TEK	300- 34	DR482	GIC	274- 53	DS42-07A	BBCG	357- 57	DSR6151	♦TRW	281- 20
DEP1719A	♦MSI	535- 9	DK752	TEK	311- 10	DR498	GIC	268- 79	DS42-11A	BBCG	376- 75	DSR6200	TRW	281- 91
DEP1720A	♦MSI	536- 50	DK753	TEK	321- 40	DR500	GIC	274- 56	DS42-14A	BBCG	382- 70	DSR6201	♦TRW	282- 34
DEP1722A	♦MSI	539- 23	DK754	TEK	329- 96	DR521	GIC	280- 96	DS42-16A	BBCG	386- 81	DSZ3006	TRW	176-187
DEP1724A	♦MSI	540- 16	DK755	TEK	340- 14	DR562	GIC	276- 52	DS42-18A	BBCG	388- 63	DSZ3007	TRW	179- 27
DEP1726A	♦MSI	543- 49	DK756	TEK	347- 17	DR661	GIC	280- 53	DS110-04A	BBCG	337- 10	DSZ3008	TRW	181- 76
DER1	♦DIC	371- 13	DK757	TEK	355- 54	DR664	GIC	267-106	DS110-07A	BBCG	357-105	DSZ3009	TRW	184-208
DER2	♦DIC	390- 3	DK758	TEK	360- 13	DR667	GIC	284- 50	DS110-11A	BBCG	376- 99	DSZ3010	TRW	187- 59
DER3	♦DIC	394- 45	DK7510	TEK	370- 57	DR668	GIC	254- 10	DS110-14A	BBCG	382-107	DSZ3011	TRW	189-123
DER4	♦DIC	397- 18	DK7512	TEK	378- 2	DR669	GIC	256- 77	DS110-16A	BBCG	386-101	DSZ3012	TRW	191-150
DER5	♦DIC	399- 55	DK7515	TEK	384- 75	DR670	GIC	258- 5	DS110-18A	BBCG	388- 67	DSZ3013	TRW	194- 59
DER6	♦DIC	401- 14	DLA5544	♦ALP	599- 51	DR671	GIC	258- 32	DS203VA	ITT	374- 29	DSZ3014	TRW	196- 15
DER7	♦DIC	402- 33	DMF6034	♦ALP	513- 41	DR672	GIC	274- 3	DS250-04L	BBCG	337-105	DSZ3015	TRW	196-172
DER8	♦DIC	403- 69	DMF6034A	♦ALP	513- 42	DR673	GIC	280- 65	DS250-07L	BBCG	358- 49	DSZ3016	TRW	199- 13
DER9	♦DIC	404- 68	DMF6034B	♦ALP	513- 43	DR674	GIC	281- 75	DS303VA	ITT	374- 47	DSZ3018	TRW	201- 79
DER10	♦DIC	405- 80	DMF6035	♦ALP	513- 44	DR675	GIC	283- 91	DSA0 9-11A	BBCG	376- 35	DSZ3020	TRW	204- 71
DER11	♦DIC	406- 71	DMF6035A	♦ALP	513- 45	DR677	GIC	268- 81	DSA0.9-14A	BBCG	382- 13	DSZ3022	TRW	206- 28
DER12	♦DIC	407- 23	DMF6035B	♦ALP	513- 46	DR688	GIC	280- 95	DSA0.9-16A	BBCG	386- 20	DSZ3024	TRW	208- 41
DER13	♦DIC	407- 64	DMF6037	♦ALP	513- 47	DR694	GIC	283-107	DSA0.9-18A	BBCG	388- 19	DSZ3027	TRW	210- 98
DER14	♦DIC	407- 96	DMF6037A	♦ALP	513- 48	DR695	GIC	259- 46	DSA1.2-11A	BBCG	376- 42	DSZ3030	TRW	212-146
DER15	♦DIC	408- 40	DMF6037B	♦ALP	513- 49	DR698	GIC	259- 45	DSA1.2-14A	BBCG	382- 26	DSZ3033	TRW	214- 86
DG11	TSAJ	319- 22	DMF6106	♦ALP	513- 50	DR699	GIC	258- 72	DSA1.2-16A	BBCG	386- 34	DSZ3036	TRW	216- 60
DGA6036	♦ALP	594- 98	DMF6106A	♦ALP	513- 51	DR826	GIC	258- 80	DSA1.2-18A	BBCG	388- 31	DSZ3040	TRW	218-192
DH4R2	GELC	311- 41	DMF6106B	♦ALP	513- 52	DR827	GIC	274- 4	DSA2-11A	BBCG	376- 50	DSZ3045	TRW	220- 79
DH4R4	GELC	330- 21	DMF6107	♦ALP	515- 89	DR833	GIC	283- 87	DSA2-14A	BBCG	382- 36	DSZ3050	TRW	222- 48
DH4R6	GELC	347- 48	DMF6107A	♦ALP	515- 90	DR848	GIC	249- 71	DSA2-16A	BBCG	386- 44	DSZ3056	TRW	224- 7
DHD800	♦GESY	246- 8	DMF6107B	♦ALP	515- 91	DR852	GIC	268- 5	DSA2-18A	BBCG	388- 39	DSZ3060	TRW	225- 97
DHD805	♦GESY	246- 66	DMF6130	♦ALP	513- 53	DR863	GIC	249- 68	DSA6-11A	BBCG	376- 60	DSZ3062	TRW	225-152
DHD806	♦GESY	247- 45	DMF6130A	♦ALP	513- 54	DR999	GIC	280- 42	DSA6-14A	BBCG	382- 49	DSZ3070	TRW	228- 75
DI3B28	DII	406- 7	DMF6130B	♦ALP	513- 55	DRS102	♦DEL	312-105	DSA6-16A	BBCG	386- 61	DSZ3075	TRW	228-122
DI5AU4	DII	385-107	DMF6131	♦ALP	513- 56	DRS104	♦DEL	331- 91	DSA6-18A	BBCG	388- 50	DSZ3080	TRW	229-183
DI5AW4	DII	385-108	DMF6131A	♦ALP	513- 57	DRS106	♦DEL	349- 5	DSA9-11A	BBCG	376- 64	DSZ3090	TRW	231-115
DI5AZ4	DII	385-109	DMF6131B	♦ALP	513- 58	DRS108	♦DEL	361- 81	DSA9-14A	BBCG	382- 53	DSZ3100	TRW	232-189
DI5R4	DII	393- 28	DMF6132	♦ALP	515- 92	DRS110	♦DEL	371-110	DSA9-16A	BBCG	386- 65	DSZ5110	TRW	233-166
DI5T4	DII	385-110	DMF6132A	♦ALP	515- 93	DRS112	♦DEL	378- 79	DSA9-18A	BBCG	388- 54	DSZ5210	TRW	233-167
DI5U4	DII	386- 1	DMF6132B	♦ALP	515- 94	DRS114	♦DEL	382- 28	DSA22-11A	BBCG	376- 70	DSZ5706	TRW	178-101
DI5V4	DII	386- 2	DNA5856	♦ALP	599- 52	DRS114C	♦DEL	288- 88	DSA22-14A	BBCG	382- 61	DSZ5707	TRW	180-144
DI5W4	DII	386- 3	DPZ30-30R	♦DEL	214- 85	DRS114D	♦DEL	288- 89	DSA22-16A	BBCG	386- 75	DSZ5708	TRW	183- 12
DI5Y3	DII	386- 4	DPZ30-33R	♦DEL	216- 59	DRS163	♦DEL	326- 15	DSA22-18A	BBCG	388- 61	DSZ5709	TRW	186-128
DI5Z4	DII	386- 5	DPZ30-36R	♦DEL	217-129	DRS164	♦DEL	337- 13	DSA42-11A	BBCG	376- 76	DSZ5710	TRW	189- 26
DI6BW4	DII	385-104	DPZ30-39R	♦DEL	219- 40	DRS165	♦DEL	344- 53	DSA42-14A	BBCG	382- 71	DSZ5712	TRW	193-116

Δ-Registered with JEDEC by this manufacturer

♦-Copy of mfr's data sheet may be ordered from D.A.T.A.

1. TYPE No. CROSS INDEX

IN TYPE NUMBER SEQUENCE

TYPE No.	MFRS	Pg&Line
DSZ5713	TRW	195-139
DSZ5714	TRW	196-131
DSZ5715	TRW	198-116
DSZ5716	TRW	200- 82
DSZ5718	TRW	203- 8
DSZ5720	TRW	205-145
DSZ5722	TRW	207-131
DSZ5724	TRW	209-106
DSZ5727	TRW	212- 1
DSZ5730	TRW	214- 6
DSZ5733	TRW	215-162
DSZ5736	TRW	217- 56
DSZ5740	TRW	219- 8
DSZ5745	TRW	220-125
DSZ5750	TRW	222- 96
DSZ5756	TRW	225- 4
DSZ5760	TRW	225-136
DSZ5770	TRW	228- 89
DSZ5775	TRW	229-104
DSZ5780	TRW	229-201
DSZ5790	TRW	231-131
DSZ5806	TRW	178-102
DSZ5807	TRW	180-145
DSZ5808	TRW	183- 13
DSZ5809	TRW	186-129
DSZ5810	TRW	189- 27
DSZ5812	TRW	193-117
DSZ5813	TRW	195-140
DSZ5814	TRW	196-132
DSZ5815	TRW	198-117
DSZ5816	TRW	200- 83
DSZ5818	TRW	203- 9
DSZ5820	TRW	205-146
DSZ5822	TRW	207-132
DSZ5824	TRW	209-107
DSZ5827	TRW	212- 2
DSZ5830	TRW	214- 7
DSZ5833	TRW	215-163
DSZ5836	TRW	217- 57
DSZ5840	TRW	219- 9
DSZ5845	TRW	220-126
DSZ5850	TRW	222- 97
DSZ5856	TRW	225- 5
DSZ5860	TRW	225-137
DSZ5870	TRW	228- 90
DSZ5875	TRW	229-105
DSZ5880	TRW	230- 1
DSZ5890	TRW	231-132
DVA6180	♦ALP	599- 54
DVA6181	♦ALP	599- 55
DVA6181A	♦ALP	599- 56
DVA6181B	♦ALP	599- 57
DVA6182	♦ALP	599- 58
DVA6182A	♦ALP	599- 59
DVA6182B	♦ALP	599- 60
DVA6183	♦ALP	599- 61
DVA6183A	♦ALP	599- 62
DVA6183B	♦ALP	599- 63
DVA6184	♦ALP	599- 64
DVA6184A	♦ALP	599- 65
DVA6185	♦ALP	599- 66
DVA6185A	♦ALP	599- 67
DVA6185B	♦ALP	599- 68
DVA6186	♦ALP	599- 69
DVA6186A	♦ALP	599- 70
DVA6186B	♦ALP	599- 71
DVA6187	♦ALP	599- 72
DVA6187A	♦ALP	599- 73
DVA6187B	♦ALP	599- 74
DVA6188	♦ALP	599- 75
DVA6188A	♦ALP	599- 76
DVA6188B	♦ALP	599- 77
DVB6100A	♦ALP	596- 93
DVB6100B	♦ALP	596- 94
DVB6100C	♦ALP	596- 95
DVB6101A	♦ALP	596- 96
DVB6101B	♦ALP	596- 97
DVB6101C	♦ALP	596- 98
DVB6101D	♦ALP	596- 99
DVB6101E	♦ALP	596-100
DVB6102A	♦ALP	596-101
DVB6102B	♦ALP	596-102
DVB6102C	♦ALP	596-103
DVB6102D	♦ALP	596-104
DVB6103A	♦ALP	596-105
DVB6103B	♦ALP	596-106
DVB6103C	♦ALP	596-107
DVB6103D	♦ALP	596-108
DVB6104A	♦ALP	596-109
DVB6104B	♦ALP	596-110
DVB6104C	♦ALP	597- 1
DVB6104D	♦ALP	597- 2
DZ10A	SOIF	188- 26
DZ10B	SOIF	233- 45
DZ12A	SOIF	192- 95
DZ12B	SOIF	236- 41
DZ15A	SOIF	197-115
DZ15B	SOIF	239- 55
DZ18A	SOIF	202- 22
DZ18B	SOIF	242- 23
DZ22A	SOIF	206-136
DZ27A	SOIF	211- 19
DZ33A	SOIF	214-176
DZ39A	SOIF	218- 12
DZ47A	SOIF	221- 27
DZ56A	SOIF	224- 62
DZ68A	SOIF	227- 71
DZ82A	SOIF	230- 66
E1	PWC	300-107
	♦SAR	
E1A3	EDL	294- 56
E1B3	EDL	301- 49
E1C3	EDL	312- 49
E1D3	EDL	319- 31

TYPE No.	MFRS	Pg&Line
E1E3	EDL	322- 17
E1F3	EDL	327- 45
E1G3	EDL	331- 29
E1H3	EDL	340- 97
E1K3	EDL	348- 50
E1M3	EDL	355- 95
E1N3	EDL	361- 24
E2	PWC	311- 96
E2A3	EDL	295- 86
E2B3	EDL	303- 25
E2C3	EDL	314- 34
E2D3	EDL	319- 33
E2E3	EDL	323- 60
E2F3	EDL	327- 48
E2G3	EDL	333- 27
E2H3	EDL	342- 16
E2K3	EDL	350- 46
E2M3	EDL	356- 69
E2N3	EDL	362-102
E3	PWC	321- 93
E3A3	EDL	295-109
E3B3	EDL	303- 61
E3C3	EDL	314- 75
E3D3	EDL	319- 36
E3E3	EDL	323- 92
E3F3	EDL	327- 49
E3G3	EDL	333- 67
E3H3	EDL	342- 39
E3K3	EDL	350- 81
E3M3	EDL	356- 77
E3N3	EDL	363- 17
E4	PWC	330- 78
E4A3	EDL	296- 21
E4B3	EDL	303- 87
E4C3	EDL	314-107
E4D3	EDL	319- 38
E4E3	EDL	324- 10
E4F3	EDL	327- 51
E4G3	EDL	333-106
E4H3	EDL	342- 71
E4K3	EDL	351- 12
E4M3	EDL	356-106
E4N3	EDL	363- 59
E05	PWC	294- 19
E5	PWC	340- 67
E5A3	EDL	296- 30
E5B3	EDL	303-101
E5C3	EDL	315- 11
E5D3	EDL	319- 41
E5E3	EDL	324- 19
E5F3	EDL	327- 53
E5G3	EDL	334- 10
E5H3	EDL	342- 75
E5K3	EDL	351- 24
E5M3	EDL	356-109
E5N3	EDL	363- 70
E6	PWC	347-107
E6A3	EDL	296- 47
E6B3	EDL	304- 21
E6C3	EDL	315- 46
E6D3	EDL	319- 44
E6E3	EDL	324- 43
E6F3	EDL	327- 56
E6G3	EDL	334- 45
E6H3	EDL	342- 92
E6HZ	SOIF	347- 77
E6HZS	SOIF	287- 37
E6K3	EDL	351- 57
E6M3	EDL	357- 3
E6N3	EDL	363- 93
E7	PWC	355- 79
E7A3	EDL	296- 73
E7B3	EDL	304- 49
E7C3	EDL	315- 78
E7D3	EDL	319- 46
E7E3	EDL	324- 65
E7F3	EDL	327- 58
E7G3	EDL	334- 85
E7H3	EDL	343- 13
E7K3	EDL	351- 93
E7M3	EDL	357- 27
E7N3	EDL	364- 23
E8	PWC	360- 87
E8HZ	SOIF	360- 61
E10	PWC	371- 14
E11	SOIF	300- 80
E12	PWC	378- 36
E21	SOIF	311- 65
E41	SOIF	330- 47
E61	SOIF	347- 78
E81	SOIF	360- 62
E101	SOIF	370-104
E602	EAS	531- 29
E603	EAS	532-105
E605	EAS	534- 36
E607	EAS	536- 51
E610	EAS	540- 17
E656	SGSI	256- 57
E700	EAS	527-103
E701	EAS	529- 8
E702	EAS	531- 30
E703	EAS	532-106
E705	EAS	534- 37
E707	EAS	536- 52
E710	EAS	540- 18
E715	EAS	544- 87
E722	EAS	549- 57
E750C110S1	AEGG	395- 60
E1500C110S1	AEGG	402- 32
E1712A	♦MSI	528- 46
E1714A	♦MSI	531- 31
E1716A	♦MSI	532- 13
E1717A	♦MSI	533- 37
E1718A	♦MSI	533-110

TYPE No.	MFRS	Pg&Line
E1719A	♦MSI	535- 10
E1720A	♦MSI	536- 53
E1722A	♦MSI	539- 24
E1724A	♦MSI	540- 19
E1726A	♦MSI	543- 50
EA7E1	♦CRL	575- 56
EA7E2	♦CRL	575- 57
EA7E3	♦CRL	575- 58
EA7E5	♦CRL	575- 59
EA403	SGSI	268- 58
EB383	SGSI	275-109
EC080	EDI	361- 37
EC100	EDI	371- 72
EC120	EDI	378- 56
EC401	SGSI	255- 6
EC402	SGSI	252- 46
ED01	ORIJ	290- 15
ED03	ORIJ	290- 16
		401- 32
ED05	ORIJ	401- 50
ED20	ORIJ	378- 91
ED3000	ERI	298- 42
	SCN	
ED3000A	ERI	298- 43
	SCN	
ED3000B	ERI	298- 44
	SCN	
ED3001	ERI	307- 25
	SCN	
ED3001A	ERI	307- 26
	SCN	
ED3001B	ERI	307- 28
	SCN	
ED3002	ERI	319- 21
	SCN	
ED3002A	ERI	319- 26
	SCN	
ED3002B	ERI	319- 30
	SCN	
ED3003	ERI	327- 38
	SCN	
ED3003A	ERI	327- 40
	SCN	
ED3003B	ERI	327- 43
	SCN	
ED3004	ERI	338- 42
	SCN	
ED3004A	ERI	329- 65
	SCN	
ED3004B	ERI	338- 46
	SCN	
ED3005	ERI	345- 47
	SCN	
ED3005A	ERI	345- 48
	SCN	
ED3005B	ERI	345- 50
	SCN	
ED3006	ERI	354-100
	SCN	
ED3006B	ERI	354-102
	SCN	
ED3007	ERI	358- 94
	SCN	
ED3007A	ERI	358- 95
	SCN	
ED3007B	ERI	358- 97
	SCN	
ED3008	ERI	366- 97
	SCN	
ED3008A	ERI	366- 98
	SCN	
ED3008B	ERI	366- 99
	SCN	
ED3009	ERI	368-110
	SCN	
ED3009A	ERI	369- 1
	SCN	
ED3009B	ERI	369- 2
	SCN	
ED3010	ERI	376- 30
	SCN	
ED3010A	ERI	376- 33
	SCN	
ED3010B	ERI	376- 38
	SCN	
ED8307	♦EDI	286-101
ED8308	♦EDI	287- 88
ED8309	♦EDI	288- 27
ED8310	♦EDI	286-102
ED8311	♦EDI	287- 89
ED8312	♦EDI	288- 28
EDH2-30	ORIJ	412- 24
EDH4-75	ORIJ	413- 20
EDH4-100	ORIJ	413- 26
EDH4-125	ORIJ	413- 37
EDH4-150	ORIJ	413- 41
EDH12	ORIJ	406-106
EDH18	ORIJ	291- 34
EDH36	ORIJ	412- 64
EG100	GIC	329- 15
EG100H	GIC	339- 67
EG200	EDI	389- 97
EG250	EDI	392- 51
EG300	EDI	394- 37
EH250	EDI	392- 41
EH300	EDI	394- 22
EH350	EDI	395- 71
EH400	EDI	397- 7
EHT1500B	ITTE	407- 48
EHT1700B	ITTE	409- 20
EHT1750B	ITTE	409- 84
EK450	EDI	398- 11
EK500	EDI	399- 45
EK600	EDI	401- 3

TYPE No.	MFRS	Pg&Line
EL20	♦UNI	500- 43
EL20A	♦UNI	500- 44
EL25	♦UNI	502- 99
EL25A	♦UNI	502-100
EL30	♦UNI	502-103
EL30A	♦UNI	502-104
EL35	♦UNI	503- 35
EL35A	♦UNI	503- 36
EL40	♦UNI	503- 40
EL40A	♦UNI	503- 41
EL200	♦UNI	500- 45
EL200G	♦UNI	500- 46
EL250	♦UNI	502-101
EL250G	♦UNI	502-102
EL300	♦UNI	502-105
EL300G	♦UNI	502-106
EL350	♦UNI	503- 37
EL350G	♦UNI	503- 38
EL400	♦UNI	503- 42
EL400G	♦UNI	503- 43
EM1	PWC	300-108
EM2	PWC	311- 97
EM3	PWC	321- 94
EM4	PWC	330- 79
EM05	PWC	294- 20
EM5	PWC	340- 68
EM6	PWC	347-108
EM7	PWC	355- 80
EM8	PWC	360- 88
EM10	PWC	371- 15
EM12	PWC	378- 37
EM401	ITT	300- 52
EM402	ITT	311- 35
EM404	ITT	330- 13
EM406	ITT	347- 40
EM408	ITT	360- 28
EM410	ITT	370- 70
EM501	INTG	300- 81
	ITT	
EM502	INTG	311-109
	ITT	
EM504	INTG	330- 48
	ITT	
EM506	INTG	347- 79
	ITT	
EM508	INTG	360- 63
	ITT	
EM510	INTG	370-105
	ITT	
EM513	INTG	371- 41
EP1712A	♦MSI	528- 47
EP1714A	♦MSI	531- 32
EP1716A	♦MSI	532- 14
EP1717A	♦MSI	533- 38
EP1718A	♦MSI	534- 1
EP1719A	♦MSI	535- 11
EP1720A	♦MSI	536- 54
EP1722A	♦MSI	539- 25
EP1724A	♦MSI	540- 20
EP1726A	♦MSI	543- 51
ER1	TEC	293- 48
ER2△	SOIF	283- 36
ER4	SOIF	285- 90
ER6	SOIF	287- 38
ER11	TEC	299- 96
ER21	TEC	310- 65
ER31	TEC	320-108
ER41	TEC	329- 31
ER51	TEC	339- 77
ER61	TEC	346- 73
ER81	TEC	359- 35
ER181	TEC	294- 34
ER182	TEC	301- 24
ER183	TEC	312- 21
ER184	TEC	331- 3
ER185	TEC	348- 30
ER186	TEC	361- 7
ER187	TEC	371- 42
ERD100	ITT	299- 82
ERD200	ITT	310- 47
ERD300	ITT	320- 93
ERD400	ITT	329- 7
ERD500	ITT	339- 62
ERD600	ITT	346- 58
ERD700	ITT	355- 29
ERD800	ITT	359- 72
ERD900	ITT	367- 4
ERD1000	ITT	370- 13
EVR4,A,B	TEC	173- 80
EVR5,A,B	TEC	175- 55
EVR6,A,B	TEC	178- 4
EVR7,A,B	TEC	180- 50
EVR8,A,B	TEC	182- 97
EVR9,A,B	TEC	186- 30
EVR10,A,B	TEC	188-109
EVR11,A,B	TEC	190-103
EVR12,A,B	TEC	193- 1
EVR13,A,B	TEC	195- 41
EVR14,A,B	TEC	196- 84
EVR15,A,B	TEC	198- 8
EVR16,A,B	TEC	199-177
EVR17,A,B	TEC	201- 34
EVR18,A,B	TEC	202-101
EVR19,A,B	TEC	203-172
EVR20,A,B	TEC	205- 48
EVR21,A,B	TEC	206- 19
EVR22,A,B	TEC	207- 27
EVR23,A,B	TEC	208- 20
EVR24,A,B	TEC	209- 14
EVR25,A,B	TEC	210- 40
EVR26,A,B	TEC	210- 91
EVR27,A,B	TEC	211- 91
EVR28,A,B	TEC	212-119
EVR30,A,B	TEC	213- 92

TYPE No.	MFRS	Pg&Line
EVR32,A,B	TEC	214- 82
EVR36,A,B	TEC	216-164
EVR39,A,B	TEC	218- 62
EVR43,A,B	TEC	219-138
EVR47,A,B	TEC	221- 78
EVR50,A,B	TEC	222- 62
EVR56,A,B	TEC	224-106
EVR60,A,B	TEC	225-119
EVR68,A,B	TEC	227-114
EVR75,A,B	TEC	229- 30
EVR82,A,B	TEC	230-109
EVR91,A,B	TEC	232- 47
EVR100,A,B	TEC	233- 90
EVR110,A,B	TEC	235- 55
EVR150,A,B	TEC	239- 94
EZ6A	SOIF	178- 5
EZ8A	SOIF	182- 98
EZ10A	SOIF	188-110
EZ10B	SOIF	233- 91
EZ12A	SOIF	193- 2
EZ12B	SOIF	236- 79
EZ15A	SOIF	198- 9
EZ15B	SOIF	239- 95
EZ18A	SOIF	202-102
EZ18B	SOIF	242- 60
EZ22A	SOIF	207- 28
EZ27A	SOIF	211- 92
EZ33A	SOIF	215- 59
EZ39A	SOIF	218- 63
EZ47A	SOIF	221- 79
EZ56A	SOIF	224-107
EZ68A	SOIF	227-115
EZ82A	SOIF	230-110
EZ100	EDI	369- 41
EZ150	EDI	384- 11
EZ200	EDI	389- 58
EZ250	EDI	392- 25
EZ300	EDI	393-106
EZ350	EDI	395- 56
EZ400	EDI	396- 84
F1A3	EDL	295-110
F1B3	EDL	303- 62
F1C3	EDL	314- 76
F1D3	EDL	319- 37
F1E3	EDL	323- 93
F1F3	EDL	327- 50
F1G3	EDL	333- 68
F1H3	EDL	342- 40
F1K3	EDL	350- 82
F1M3	EDL	356- 78
F1N3	EDL	363- 18
F2A3	EDL	296- 48
F2B3	EDL	304- 22
F2C3	EDL	315- 47
F2D3	EDL	319- 45
F2E3	EDL	324- 44
F2F3	EDL	327- 57
F2G3	EDL	334- 46
F2H3	EDL	342- 93
F2K3	EDL	351- 58
F2M3	EDL	357- 4
F2N3	EDL	363- 94
F3A3	EDL	296- 93
F3B3	EDL	304- 76
F3C3	EDL	315-110
F3D3	EDL	319- 49
F3E3	EDL	324- 89
F3F3	EDL	327- 60
F3G3	EDL	335- 7
F3H3	EDL	343- 30
F3K3	EDL	352- 4
F3M3	EDL	357- 34
F3N3	EDL	364- 39
F4A3	EDL	297- 1
F4B3	EDL	304-104
F4C3	EDL	316- 28
F4D3	EDL	319- 52
F4E3	EDL	324-107
F4F3	EDL	327- 63
F4G3	EDL	335- 35
F4H3	EDL	343- 49
F4K3	EDL	352- 32
F4M3	EDL	357- 41
F4N3	EDL	364- 58
F5A3	EDL	297- 29
F5B3	EDL	305- 24
F5C3	EDL	316- 66
F5D3	EDL	319- 56
F5E3	EDL	325- 13
F5F3	EDL	327- 67
F5G3	EDL	335- 69
F5H3	EDL	343- 63
F5K3	EDL	352- 57
F5M3	EDL	357- 46
F5N3	EDL	364- 70
F8	SAR	360-100
F10	SAR	371- 29
F11	SOIF	301- 65
F12	SOIF	302- 33
F14A	NECJ	300-109
F14B	NECJ	311- 98
F14C	NECJ	321- 95
F14D	NECJ	330- 80
F14E	NECJ	340- 69
F14F	NECJ	347-109
F14H	NECJ	360- 89
F15	♦SAR	384- 67
F16H1	GESY	174- 78
F20	♦SAR	389-105
F21	SOIF	312- 65
F22	SOIF	313- 36
F25	♦SAR	392- 56
F40H	SOIF	397- 47
F41	SOIF	331- 48

△-Registered with JEDEC by this manufacturer

♦-Copy of mfr's data sheet may be ordered from D.A.T.A.

1. TYPE No. CROSS INDEX

IN TYPE NUMBER SEQUENCE

TYPE No.	MFRS	Pg&Line
F41Z	SOIF	331- 44
F42	SOIF	332- 23
F42Z	SOIF	332- 24
F61	SOIF	348- 73
F61Z	SOIF	348- 74
F62	SOIF	349- 44
F62Z	SOIF	349- 45
F80H	SOIF	404- 5
F81	SOIF	361- 42
F81Z	SOIF	361- 43
F82	SOIF	361-109
F82Z	SOIF	361-110
F100	♦GICI	280- 6
F100H	SOIF	406- 35
F101	SOIF	371- 77
F102	SOIF	372- 25
F150H	SOIF	408- 74
F150HL	SOIF	408- 75
F200	♦GICI	283- 56
F200H	SOIF	410- 42
F200HL	SOIF	410- 43
F250H	SOIF	411- 48
F250HL	SOIF	411- 49
F300H	SOIF	412- 45
F300HL	SOIF	412- 46
F400	♦GICI	285-108
F600	♦GICI	287- 58
FA2320	FSC	599- 78
FA2330	FSC	599- 79
FA4320	FSC	599- 80
FA4330	FSC	599- 81
FA8001	FSC	183- 83
FA8002	FSC	183- 84
FA8003	FSC	183- 85
FA8004	FSC	183- 86
FA8005	FSC	191- 82
FA8006	FSC	191- 83
FA8007	FSC	191- 84
FA8008	FSC	191- 85
FA8009	FSC	196-173
FA8010	FSC	196-174
FA8011	FSC	196-175
FA8012	FSC	196-176
FB050	♦SCO	295- 35
FB100	♦SCO	302- 63
FB200	♦SCO	313- 69
FB400	♦SCO	332- 55
FB600	♦SCO	349- 75
FB800	♦SCO	362- 25
FB1000	♦SCO	372- 49
FCT1021	♦FSC	176-172
FCT1022	♦FSC	176-173
FCT1025	♦FSC	176-174
FCT1035	♦FSC	176-175
FCT1121	♦FSC	176-176
FCT1122	♦FSC	176-177
FCT1125	♦FSC	176-178
FCT1135	♦FSC	176-179
FD13	SOIF	303- 14
FD23	SOIF	314- 23
FD43	SOIF	333- 16
FD63	SOIF	350- 34
FD83	SOIF	362- 90
FD100	♦FSC	270- 86
	SGSI	
FD103	SOIF	372- 97
FD111	♦FSC	271- 5
FD200	♦FSC	281- 8
	SGSI	
FD200B2	MITJ	306- 52
FD200B4	MITJ	318- 2
FD200B8	MITJ	337- 40
FD200B16	MITJ	365-110
FD222	♦FSC	280- 73
FD250A20	MITJ	375- 57
FD250A24	MITJ	380- 55
FD250A30	MITJ	385- 41
FD250A32	MITJ	387- 5
FD250A36	MITJ	388- 73
FD250A40	MITJ	390- 67
FD300	♦FSC	254-102
	SGSI	
FD333	♦FSC	255- 3
FD400	♦FSC	256- 14
FD444	♦FSC	255- 16
FD500D10	MITJ	345- 38
FD500D12	MITJ	354- 79
FD500D16	MITJ	366- 77
FD500D20	MITJ	376- 11
FD500D24	MITJ	381- 10
FD500E30	MITJ	385- 82
FD500E40	MITJ	390- 91
FD500E50	MITJ	392- 86
FD500E60	MITJ	394-106
FD600	♦FSC	275- 41
FD700	♦FSC	267- 18
FD777	♦FSC	264-106
FD1000A12	MITJ	354- 83
FD1000A16	MITJ	366- 81
FD1000A24	MITJ	381- 24
FD1000A32	MITJ	387- 69
FD1000A36	MITJ	389- 2
FD1000A40	MITJ	390-103
FD1000A50	MITJ	392- 90
FD1000A56	MITJ	393- 52
FD6666	♦FSC	275- 71
FDH400	♦FSC	256- 15
FDH444	♦FSC	255- 17
FDH600	♦FSC	275- 77
FDH666	♦FSC	269- 38
FDN400	♦FSC	256- 16
FDN444	♦FSC	255- 18
FDN600	♦FSC	275- 42
FDN666	♦FSC	269- 12

TYPE No.	MFRS	Pg&Line
FDR300	♦FSC	592- 60
FDR600	♦FSC	592- 61
FDR700	♦FSC	592- 62
FDZ10A	SOIF	189- 1
FDZ10B	SOIF	233-142
FDZ12A	SOIF	193- 90
FDZ12B	SOIF	236-129
FDZ15A	SOIF	198- 91
FDZ15B	SOIF	239-142
FDZ18A	SOIF	202-183
FDZ18B	SOIF	242-103
FDZ22A	SOIF	207-106
FDZ27A	SOIF	211-173
FDZ33A	SOIF	215-138
FDZ39A	SOIF	218-112
FDZ47A	SOIF	221-134
FDZ56A	SOIF	224-163
FDZ68A	SOIF	227-169
FDZ82A	SOIF	230-159
FGG1001	♦FSC	265- 54
FH1100	♦FSC	593- 13
FJT1000	♦FSC	268- 77
FJT2000	♦FSC	268- 78
FPM200	♦FSC	575- 60
FPZ5V6	SOIF	173- 81
FPZ6V2	SOIF	175- 56
FPZ6V8	SOIF	178- 6
FPZ7V5	SOIF	180- 51
FPZ8V2	SOIF	182- 99
FPZ9V1	SOIF	186- 31
FPZ10	SOIF	188-111
FPZ11	SOIF	190-104
FPZ12	SOIF	193- 3
FR500AW12	MITJ	507- 84
FR500AW16	MITJ	509- 2
FR500AW20	MITJ	509- 14
FR500AW24	MITJ	509- 23
FR500AX12	MITJ	507- 85
FR500AX16	MITJ	509- 3
FR500AX20	MITJ	509- 15
FR500AX24	MITJ	509- 24
FR500AY12	MITJ	507- 86
FR500AY16	MITJ	509- 4
FR501	SOIF	272- 69
FR1001	SOIF	279- 31
FR2001	SOIF	282- 96
FR3001	SOIF	284- 49
FR4001	SOIF	285- 70
FS19	ESMF	292- 35
MISI	RADF	
FS36	ESMF	267- 3
	MISI	
FS503PA	ITT	357- 85
FS503RA	ITT	365- 53
FS503VA	ITT	374-103
FS703PA	ITT	357- 97
FS703RA	ITT	365- 75
FS703VA	ITT	375- 13
FT101BX2	MITJ	428- 52
FT101BX4	MITJ	438- 33
FT101BX6	MITJ	446- 31
FT150B2	MITJ	428-110
FT150B4	MITJ	439- 23
FT150B8	MITJ	455- 47
FT150B12	MITJ	469- 5
FT150B16	MITJ	478- 1
FT150B20	MITJ	484- 57
FT150B24	MITJ	489- 41
FT150B28	MITJ	492- 48
FT150B32	MITJ	493- 89
FT150BX2	MITJ	428- 99
FT150BX4	MITJ	438-109
FT150BX6	MITJ	446- 92
FT150BX8	MITJ	455- 24
FT150BX10	MITJ	461- 42
FT150BX12	MITJ	468- 89
FT150BX16	MITJ	477- 86
FT150BX20	MITJ	484- 37
FT150BY2	MITJ	428-100
FT150BY4	MITJ	438-110
FT150BY6	MITJ	446- 93
FT150BY8	MITJ	455- 25
FT150BY10	MITJ	461- 43
FT150BY12	MITJ	468- 90
FT151BX2	MITJ	428-103
FT151BX4	MITJ	439- 3
FT151BX6	MITJ	446- 96
FT250B12	MITJ	469- 65
FT250B16	MITJ	478- 51
FT250B20	MITJ	484- 96
FT250B24	MITJ	489- 74
FT250B28	MITJ	492- 66
FT250B32	MITJ	493-104
FT250BX2	MITJ	429- 27
FT250BX4	MITJ	439- 68
FT250BX6	MITJ	447- 28
FT250BX8	MITJ	455- 96
FT250BX10	MITJ	461- 90
FT250BX12	MITJ	469- 63
FT250BX16	MITJ	478- 50
FT250BX20	MITJ	484- 95
FT250BY2	MITJ	429- 28
FT250BY4	MITJ	439- 69
FT250BY6	MITJ	447- 29
FT250BY8	MITJ	455- 97
FT250BY10	MITJ	461- 91
FT250BY12	MITJ	469- 64
FT251BX2	MITJ	429- 31
FT251BX4	MITJ	439- 72
FT251BX6	MITJ	447- 32
FT300A2	MITJ	429- 47
FT300A4	MITJ	439- 90
FT300A6	MITJ	447- 48
FT300A8	MITJ	456- 8

TYPE No.	MFRS	Pg&Line
FT300A10	MITJ	461-110
FT300A12	MITJ	469- 87
FT300A16	MITJ	478- 71
FT300A20	MITJ	485- 4
FT300A24	MITJ	489- 89
FT300A28	MITJ	492- 76
FT300A32	MITJ	494- 3
FT300A36	MITJ	494- 68
FT300A40	MITJ	494-101
FT300A50	MITJ	495- 10
FT300C2	MITJ	429- 45
FT300C4	MITJ	439- 88
FT300C6	MITJ	447- 46
FT300C8	MITJ	456- 7
FT300C10	MITJ	461-109
FT300C12	MITJ	469- 86
FT301AX2	MITJ	429- 46
FT301AX4	MITJ	439- 89
FT301AX6	MITJ	447- 47
FT500A16	MITJ	478- 96
FT500A20	MITJ	485- 27
FT500A24	MITJ	489-109
FT500A28	MITJ	492- 86
FT500A32	MITJ	494- 12
FT500A36	MITJ	494- 75
FT500A40	MITJ	494-105
FT500A50	MITJ	495- 11
FT500A60	MITJ	495- 17
FT500A80	MITJ	495- 18
FT500AW12	MITJ	469-110
FT500AW16	MITJ	478- 93
FT500AW20	MITJ	485- 25
FT500AW24	MITJ	489-108
FT500AW26	MITJ	491- 65
FT500AX8	MITJ	456- 24
FT500AX10	MITJ	462- 17
FT500AX12	MITJ	470- 1
FT500AX16	MITJ	478- 94
FT500AX20	MITJ	485- 26
FT500AY2	MITJ	429- 59
FT500AY4	MITJ	439-103
FT500AY6	MITJ	447- 64
FT500AY8	MITJ	456- 25
FT500AY10	MITJ	462- 18
FT500AY12	MITJ	470- 2
FT500AY14	MITJ	473- 30
FT500AY16	MITJ	478- 95
FT500BX20	MITJ	485- 29
FT500BX24	MITJ	490- 1
FT500BX26	MITJ	491- 66
FT500BY20	MITJ	485- 30
FT500BY24	MITJ	490- 2
FT500BY26	MITJ	491- 67
FT500C8	MITJ	456- 52
FT500C10	MITJ	462- 44
FT500C12	MITJ	470- 34
FT500C16	MITJ	479- 12
FT500C20	MITJ	485- 54
FT500C24	MITJ	490- 23
FT500C28	MITJ	492- 98
FT600A6	MITJ	447- 95
FT600A8	MITJ	456- 60
FT600A10	MITJ	462- 55
FT600A12	MITJ	470- 45
FT800C4	MITJ	440- 27
FT800C6	MITJ	447-101
FT800C8	MITJ	456- 68
FT800C10	MITJ	462- 63
FT800C12	MITJ	470- 56
FT800C16	MITJ	479- 38
FT800C20	MITJ	485- 75
FT800C24	MITJ	490- 44
FT1869	♦FSC	414- 59
FT1870	♦FSC	416-106
FT1871	♦FSC	422- 41
FT1872	♦FSC	424- 16
FT1873	♦FSC	430- 55
FT1874	♦FSC	433- 9
FT1881	♦FSC	416-107
FT1882	♦FSC	422- 42
FT1883	♦FSC	424- 17
FT1884	♦FSC	430- 56
FT1885	♦FSC	433- 10
FT2009	♦FSC	414- 83
FT2010	♦FSC	418- 19
FT2011	♦FSC	424- 19
FT2012	♦FSC	433- 14
FT2013	♦FSC	442- 74
FT2014	♦FSC	449- 26
FV1006,A,B,C,D		536- 55
	KSC	
FV1008,A,B,C,D		540- 21
	KSC	
FV1010,A,B,C,D		544- 88
	KSC	
FV1014,A,B,C,D		553- 49
	KSC	
FV1016,A,B,C,D		556- 98
	KSC	
FV1106,A,B,C,D		536- 56
CRY	KSC	
FV1108,A,B,C,D		540- 22
	CRY	
FV1110,A,B,C,D		544- 89
CRY	KSC	
FV1112,A,B,C,D		549- 58
CRY	KSC	
FV1114,A,B,C,D		553- 50
CRY	KSC	
FV1116,A,B,C,D		556- 99
CRY	KSC	
FW50	♦SCN	295- 28
FW100	♦SCN	302- 54
FW200	♦SCN	313- 60

TYPE No.	MFRS	Pg&Line
FW300	♦SCN	322-109
FW400	♦SCN	332- 46
FW500	♦SCN	341- 72
FW600	♦SCN	349- 66
FW700	♦SCN	356- 32
FW800	♦SCN	362- 17
FW1000	♦SCN	372- 41
FZ901	CRY	172- 94
	♦FSC	
FZ902	CRY	176-116
	♦FSC	
FZ903	CRY	189-120
	♦FSC	
FZ952	CRY	176-117
	♦FSC	
FZ953	CRY	189-121
	♦FSC	
G0000 5A	KMC	567- 1
G0000.5B	KMC	567- 2
G0000 5C	KMC	567- 3
G0000 5D	KMC	567- 4
G00001A	KMC	567- 75
G00001B	KMC	567- 76
G00001C	KMC	567- 77
G00001D	KMC	567- 78
G001A0A	KMC	573-102
G001A0B	KMC	573-103
G001A0C	KMC	573-104
G001A0D	KMC	573-105
G1A	♦GIC	273- 4
G1B	♦GIC	279-110
G1D	♦GIC	283- 50
G1G	♦GIC	285-101
G1J	♦GIC	287- 52
G1K	♦GIC	287-109
G1M	♦GIC	288- 56
G2A	♦GIC	273- 5
G2B	♦GIC	280- 1
G2D	♦GIC	283- 51
G2G	♦GIC	285-102
G2J	♦GIC	287- 53
G2K	♦GIC	287-110
G2M	♦GIC	288- 57
G3A3	EDL	297- 38
G3A	♦GIC	273- 9
G3B3	EDL	305- 36
G3B	♦GIC	280- 5
G3C3	EDL	316- 78
G3D3	EDL	319- 58
G3D	♦GIC	283- 55
G3E3	EDL	325- 21
G3F3	EDL	327- 69
G3G3	EDL	335- 81
G3G	♦GIC	285-107
G3H3	EDL	343- 68
G3J	♦GIC	287- 57
G3K3	EDL	352- 70
G3K	♦GIC	288- 2
G3M3	EDL	357- 50
G3M	♦GIC	288- 60
G3N3	EDL	364- 79
G3 0T20,10,5	INRB	166-139
INRC	INRI	
	INRJ	
G3 3T20,10,5	INRB	167- 57
INRC	INRI	
	INRJ	
G3.6T20,10,5	INRB	168- 15
INRC	INRI	
	INRJ	
G3 9T20,10,5	INRB	168-165
INRC	INRI	
	INRJ	
G4A3	EDL	297- 53
G4B3	EDL	305- 60
G4C3	EDL	316-107
G4D3	EDL	319- 62
G4E3	EDL	325- 43
G4F3	EDL	327- 73
G4G3	EDL	336- 11
G4H3	EDL	343- 88
G4HZ	SOIF	334- 21
G4K3	EDL	352-103
G4M3	EDL	357- 61
G4N3	EDL	365- 4
G4 3T20,10,5	INRB	169-164
INRC	INRI	
	INRJ	
G4.7T20,10,5	INRB	170-170
INRC	INRI	
	INRJ	
G00005A	KMC	571- 27
G00005B	KMC	571- 28
G00005C	KMC	571- 29
G00005D	KMC	571- 30
G5A3	EDL	292- 74
G5B3	EDL	298- 93
G5C3	EDL	309- 52
G5D3	EDL	319- 10
G5E3	EDL	320- 20
G5F3	EDL	327- 23
G5G3	EDL	328- 9
G5H3	EDL	338- 92
G5K3	EDL	345- 71
G5M3	EDL	354-110
G5N3	EDL	358-103
G5.1T20,10,5	INRB	172- 13
INRC	INRI	
	INRJ	
G5 6T20,10,5	INRB	173- 82
INRC	INRI	
	INRJ	
G6HZ	SOIF	351- 33

TYPE No.	MFRS	Pg&Line
G6.2T20,10,5	INRB	175- 57
INRC	INRI	
	INRJ	
G6.8T20,10,5	INRB	178- 7
INRC	INRI	
	INRJ	
G7 5T20,10,5	INRB	180- 52
INRC	INRI	
	INRJ	
G8HZ	SOIF	363- 77
G8.2T20,10,5	INRB	182-100
INRC	INRI	
	INRJ	
G9 1T20,10,5	INRB	186- 32
INRC	INRI	
	INRJ	
G00010A	KMC	571-108
G00010B	KMC	571-109
G00010C	KMC	571-110
G00010D	KMC	572- 1
G10T20,10,5	INRB	188-112
INRC	INRI	
	INRJ	
G11T20,10,5	INRB	190-105
INRC	INRI	
	INRJ	
G12T20,10,5	INRB	193- 4
INRC	INRI	
	INRJ	
G13T20,10,5	INRB	195- 42
INRC	INRI	
	INRJ	
G15T20,10,5	INRB	198- 10
INRC	INRI	
	INRJ	
G16T20,10,5	INRB	199-178
INRC	INRI	
	INRJ	
G18T20,10,5	INRB	202-103
INRC	INRI	
	INRJ	
G00020A	KMC	572- 65
G00020B	KMC	572- 66
G00020C	KMC	572- 67
G00020D	KMC	572- 68
G20T20,10,5	INRB	205- 49
INRC	INRI	
	INRJ	
G22T20,10,5	INRB	207- 29
INRC	INRI	
	INRJ	
G24T20,10,5	INRB	209- 15
INRC	INRI	
	INRJ	
G25X01A	KMC	567- 36
G25X01D	KMC	567- 37
G25X02A	KMC	569- 20
G25X02D	KMC	569- 21
G25X15A	KMC	568- 37
G25X15D	KMC	568- 38
G27T20,10,5	INRB	211- 93
INRC	INRI	
	INRJ	
G30T20,10,5	INRB	213- 93
INRC	INRI	
	INRJ	
G00050A	KMC	573- 28
G00050B	KMC	573- 29
G00050C	KMC	573- 30
G00050D	KMC	573- 31
G50X01D	KMC	567- 25
G50X02D	KMC	569- 2
G50X15D	KMC	568- 30
G65HZ	SOIF	350- 70
G85HZ	SOIF	363- 9
G00100A	KMC	573- 58
G00100B	KMC	573- 59
G00100C	KMC	573- 60
G00100D	KMC	573- 61
G100B	♦GIC	301- 37
	GICC	
G100D	GICC	312- 37
G100G	GICC	331- 18
G100J	GICC	348- 39
G100K	GICC	361- 8
G100M	GICC	371- 43
G106,A,B	♦MSI	536- 57
G110,A,B	♦MSI	540- 23
G115,A,B	♦MSI	544- 90
G122,A,B	♦MSI	549- 59
	TIIB	
G129	APD	165- 6
	♦TII	
G130	APD	165- 18
♦TII	TIIB	
G133,A,B	♦MSI	553- 51
G147,A,B	♦MSI	556-100
G154	ITT	253- 53
G155	ITT	253- 54
G156	ITT	250- 91
G157	ITT	249- 31
G158	ITT	264-107
G159	ITT	248- 63
G168,A,B	♦MSI	560- 22
G198	ITT	266- 97
G199	ITT	265- 99
G00200A	KMC	573- 75
G00200B	KMC	573- 76
G00200C	KMC	573- 77
G00200D	KMC	573- 78
G200	ITT	265- 19
G206,A,B	♦MSI	536- 58
G210,A,B	♦MSI	540- 24
G215,A,B	♦MSI	544- 91

Δ-Registered with JEDEC by this manufacturer

♦-Copy of mfr's data sheet may be ordered from D.A.T.A.

1. TYPE No. CROSS INDEX

IN TYPE NUMBER SEQUENCE

TYPE No.	MFRS	Pg&Line
G222,A,B	♦ MSI	549- 60
G233,A,B	♦ MSI	553- 52
G247,A,B	♦ MSI	556-101
G268,A,B	♦ MSI	560- 23
G306,A,B	♦ MSI	536- 59
G310,A,B	♦ MSI	540- 25
G315,A,B	♦ MSI	544- 92
G322,A,B	♦ MSI	549- 61
G333,A,B	♦ MSI	553- 53
G347,A,B	♦ MSI	556-102
G406,A,B	♦ MSI	536- 60
G410,A,B	♦ MSI	540- 26
G415,A,B	♦ MSI	544- 93
G422,A,B	♦ MSI	549- 62
G433,A,B	♦ MSI	553- 54
G00500A	KMC	573- 91
G00500B	KMC	573- 92
G00500C	KMC	573- 93
G00500D	KMC	573- 94
G0500 5A	KMC	566-103
G0500 5B	KMC	566-104
G0500 5C	KMC	566-105
G0500.5D	KMC	566-106
G504	SOIF	295- 88
G506△	SOIF	296- 5
G506⊿,A,B	♦ MSI	536- 61
G510△	SOIF	296- 39
G510⊿,A,B	♦ MSI	540- 27
G515,A,B	♦ MSI	544- 94
G522,A,B	♦ MSI	549- 17
G603	MSI	533- 39
G606,A,B	♦ MSI	536- 62
G610,A,B	♦ MSI	540- 28
G615,A,B	♦ MSI	544- 95
G700	ITT	246-100
G701	ITT	246- 98
G702	ITT	246- 99
G703	ITT	265- 95
G704	ITT	263- 87
G766	ITT	246- 26
G788	ITT	248- 47
G789	ITT	246- 28
G790	ITT	246- 86
G814	ITT	246- 29
G815	ITT	247- 79
G816	ITT	246- 52
G819	ITT	276- 84
G820	ITT	273- 71
G821	ITT	268- 86
G822	ITT	266-108
G823	ITT	266- 21
G824	ITT	265- 50
G825	ITT	264- 82
G844	ITT	247- 33
G845	ITT	246- 30
G846	ITT	248- 31
G847	ITT	263-104
G1004	SOIF	303- 33
G1006	SOIF	303- 68
G1010	SOIF	303-110
G1104	SOIF	373- 1
G1106	SOIF	373- 21
G1110	SOIF	373- 62
G1204	SOIF	379- 8
G1206	SOIF	379- 24
G1210	SOIF	379- 39
G1506	SOIF	385- 4
G2004	SOIF	314- 42
G2006	SOIF	314- 83
G2010	SOIF	315- 21
G3006	SOIF	323- 99
G3010	SOIF	324- 26
G4004	SOIF	333- 35
G4006	SOIF	333- 76
G4010	SOIF	334- 22
G05001A	KMC	567- 61
G05001B	KMC	567- 62
G05001C	KMC	567- 63
G05001D	KMC	567- 64
G05005A	KMC	571- 16
G05005B	KMC	571- 17
G05005C	KMC	571- 18
G05005D	KMC	571- 19
G5006	SOIF	342- 46
G05010A	KMC	571- 86
G05010B	KMC	571- 87
G05010C	KMC	571- 88
G05010D	KMC	571- 89
G5010	SOIF	342- 80
G05020A	KMC	572- 51
G05020B	KMC	572- 52
G05020C	KMC	572- 53
G05020D	KMC	572- 54
G05050A	KMC	573- 13
G05050B	KMC	573- 14
G05050C	KMC	573- 15
G05050D	KMC	573- 16
G6004	SOIF	350- 54
G6006	SOIF	350- 89
G6010	SOIF	351- 34
G8004	SOIF	362-108
G8006	SOIF	363- 25
G8010	SOIF	363- 78
G10001A	KMC	567- 52
G10001D	KMC	567- 53
G10002A	KMC	569- 31
G10002D	KMC	569- 32
G10015A	KMC	568- 62
G10015D	KMC	568- 63
G15001A	KMC	567- 45
G15001D	KMC	567- 46
G15002A	KMC	569- 26
G15002D	KMC	569- 27
G15015A	KMC	568- 51

TYPE No.	MFRS	Pg&Line
G15015D	KMC	568- 52
G20001A	KMC	567- 41
G20001D	KMC	567- 42
G20002A	KMC	569- 22
G20002D	KMC	569- 23
G20015A	KMC	568- 45
G20015D	KMC	568- 46
G25001A	KMC	567- 93
G25001D	KMC	567- 94
G25002A	KMC	569- 51
G25002D	KMC	569- 52
G25015A	KMC	568- 76
G25015D	KMC	568- 77
G30001A	KMC	567- 31
G30001D	KMC	567- 32
G30002A	KMC	569- 13
G30002D	KMC	569- 14
G030010-1R	AEL	540- 29
G030010-2R	AEL	540- 30
G030010-3R	AEL	540- 31
G030012-1R	AEL	543- 52
G030012-2R	AEL	543- 53
G030012-3R	AEL	543- 54
G030015-1R	AEL	544- 96
G030015-2R	AEL	544- 97
G030015-3R	AEL	544- 98
G30015A	KMC	568- 33
G30015D	KMC	568- 34
G030018-1R	AEL	547- 96
G030018-2R	AEL	547- 97
G030018-3R	AEL	547- 98
G030022-1R	AEL	549- 18
G030022-2R	AEL	549- 19
G030022-3R	AEL	549- 20
G030027-1R	AEL	552- 33
G030027-2R	AEL	552- 34
G030027-3R	AEL	552- 35
G40001D	KMC	567- 28
G40002D	KMC	569- 8
G40015D	KMC	568- 31
G50001A	KMC	567- 79
G50001D	KMC	567- 80
G50001F	KMC	567- 81
G50002A	KMC	569- 47
G50002D	KMC	569- 48
G50002E	KMC	569- 49
G50015A	KMC	568- 71
G50015D	KMC	568- 72
G060007-1R	AEL	536- 63
G060007-2R	AEL	536- 64
G060010-1R	AEL	540- 32
G060010-2R	AEL	540- 33
G060010-3R	AEL	540- 34
G060012-1R	AEL	543- 55
G060012-2R	AEL	543- 56
G060012-3R	AEL	543- 57
G060015-1R	AEL	544- 99
G060015-2R	AEL	544-100
G060015-3R	AEL	544-101
G060018-1R	AEL	547- 99
G060018-2R	AEL	547-100
G060018-3R	AEL	547-101
G060022-1R	AEL	549- 21
G060022-2R	AEL	549- 22
G060022-3R	AEL	549- 23
G060027-1R	AEL	552- 36
G060027-2R	AEL	552- 37
G060027-3R	AEL	552- 38
GA100	♦ UNI	592- 63
GA101	♦ UNI	592- 64
GA102	♦ UNI	592- 65
GA200	♦ UNI	421-109
GA200A	♦ UNI	421-110
GA201	♦ UNI	423- 59
GA201A	♦ UNI	423- 60
GA300	♦ UNI	421-107
GA300A	♦ UNI	421-108
GA301	♦ UNI	423- 57
GA301A	♦ UNI	423- 58
GB100	UNI	592- 66
GB101	UNI	592- 67
GB102	UNI	592- 68
GB200	UNI	422- 55
GB200A	UNI	422- 56
GB201	UNI	425- 44
GB201A	UNI	425- 45
GB300	♦ UNI	422- 53
GB300A	♦ UNI	422- 54
GB301	♦ UNI	425- 34
GB301A	♦ UNI	425- 35
GBD025A	KMC	566- 2
GBD025B	KMC	566- 3
GBD025C	KMC	566- 4
GBD025D	KMC	566- 5
GBD050A	KMC	566- 10
GBD050B	KMC	566- 11
GBD050C	KMC	566- 12
GBD050D	KMC	566- 13
GBD100A	KMC	566- 18
GBD100B	KMC	566- 19
GBD100C	KMC	566- 20
GBD100D	KMC	566- 21
GBD250A	KMC	566- 53
GBD250B	KMC	566- 54
GBD250C	KMC	566- 55
GBD250D	KMC	566- 56
GBS176D	♦ TEC	499- 88
GBS210E	TEC	496- 4
GBS216	TEC	502- 74
GBS266E	TEC	496- 3
GBS276D	♦ TEC	500-102
GBS410E	TEC	496- 8
GBS416	TEC	505- 68
GBS466E	TEC	496- 7

TYPE No.	MFRS	Pg&Line
GBS476D	♦ TEC	503- 99
GC1600	♦ GHZ	527- 23
GC1601	♦ GHZ	527-104
GC1602	♦ GHZ	528- 48
GC1603	♦ GHZ	529- 9
GC1604	♦ GHZ	530- 48
GC1605	♦ GHZ	531- 33
GC1606	♦ GHZ	531-108
GC1607	♦ GHZ	532-107
GC1608	♦ GHZ	533- 51
GC1609	♦ GHZ	534- 38
GC1702	♦ GHZ	528- 49
GC1703	♦ GHZ	529- 10
GC1704	♦ GHZ	530- 49
GC1705	♦ GHZ	531- 34
GC1706	♦ GHZ	531-109
GC1707	♦ GHZ	532-108
GC1708	♦ GHZ	533- 52
GC1709	♦ GHZ	534- 39
GC1710	♦ GHZ	535- 12
GC1711	♦ GHZ	536- 65
GC1712	♦ GHZ	539- 26
GC1713	♦ GHZ	540- 35
GC1714	♦ GHZ	543- 58
GC1715	♦ GHZ	544-102
GC1716	♦ GHZ	547-102
GC1717	♦ GHZ	549- 63
GC1760	♦ GHZ	535- 13
GC1761	♦ GHZ	536- 66
GC1762	♦ GHZ	539- 27
GC1763	♦ GHZ	540- 36
GC1764	♦ GHZ	543- 59
GC1765	♦ GHZ	544-103
GC1766	♦ GHZ	547-103
GC1767	♦ GHZ	549- 64
GC1768	♦ GHZ	552- 39
GC1769	♦ GHZ	553- 55
GC1770	♦ GHZ	556- 1
GC2511	♦ GHZ	597- 3
GC2512	♦ GHZ	597- 4
GC2521	♦ GHZ	597- 5
GC2522	♦ GHZ	597- 6
GC2531	♦ GHZ	597- 7
GC2532	♦ GHZ	597- 8
GC2541	♦ GHZ	597- 9
GC2542	♦ GHZ	597- 10
GC3202	♦ GHZ	597- 11
GC3203	♦ GHZ	597- 12
GC3204	♦ GHZ	597- 13
GC3205	♦ GHZ	597- 14
GC3206	♦ GHZ	597- 15
GC3207	♦ GHZ	597- 16
GC3208	♦ GHZ	597- 17
GC3209	♦ GHZ	597- 18
GC3303	♦ GHZ	539- 68
GC3304	♦ GHZ	534- 8
GC3305	♦ GHZ	531- 52
GC3307	♦ GHZ	527- 11
GC3308	♦ GHZ	523-102
GC4020	♦ GHZ	584- 39
GC4021	♦ GHZ	584- 40
GC4022	♦ GHZ	584- 41
GC4023	♦ GHZ	584- 42
GC4050	♦ GHZ	584- 43
GC4051	♦ GHZ	584- 44
GC4052	♦ GHZ	584- 45
GC4053	♦ GHZ	584- 46
GC4054	♦ GHZ	584- 47
GC4100	♦ GHZ	584- 48
GC4101	♦ GHZ	584- 49
GC4102	♦ GHZ	584- 50
GC4103	♦ GHZ	584- 51
GC5411	♦ GHZ	521- 73
GC5412	♦ GHZ	524- 8
GC5413	♦ GHZ	526- 4
GC5414	♦ GHZ	527- 34
GC5421	♦ GHZ	521- 74
GC5422	♦ GHZ	524- 9
GC5423	♦ GHZ	526- 5
GC5424	♦ GHZ	527- 35
GC5431	♦ GHZ	521- 75
GC5432	♦ GHZ	524- 10
GC5441	♦ GHZ	521- 76
GCC830	PHIL	599- 82
GCC830A	PHIL	599- 83
GCC830B	PHIL	599- 84
GCO501	SOIF	418- 20
GCO505	SOIF	419- 32
GCO1001	SOIF	424- 20
GCO1005	SOIF	425- 64
GCO2001	SOIF	433- 15
GCO2005	SOIF	434- 82
GCO3001	SOIF	442- 75
GCO3005	SOIF	443- 63
GCO4001	SOIF	449- 27
GCO4005	SOIF	450- 78
GCO5001	SOIF	457- 22
GCO5005	SOIF	457- 58
GCS10	♦ ECC	425- 47
GCS20	♦ ECC	434- 65
GCS30	♦ ECC	443- 58
GCS40	♦ ECC	450- 62
GD1E	SHWG	249- 51
GD1P	SHWG	249- 52
GD1Q	SHWG	249- 53
GD2E	SHWG	253- 34
GD3E	SHWG	254- 54
GD4E	SHWG	249- 47
GD5E	SHWG	249- 55
GD6E	SHWG	249- 48
GD8E	SHWG	247- 64
GD11E	SHWG	247- 8
GD12E	SHWG	246-110
GD13E	SHWG	249- 39

TYPE No.	MFRS	Pg&Line
GD72E3	SHWG	247- 50
GD72E4	SHWG	247- 51
GD72E5	SHWG	247- 52
GD73E3	SHWG	249- 40
GD73E4	SHWG	249- 41
GD73E5	SHWG	249- 42
GD74E3	SHWG	250- 93
GD74E4	SHWG	250- 94
GD74E5	SHWG	250- 95
GD400	GIC	246- 87
GD401	GIC	246- 88
GD402	GIC	249- 63
GD403	GIC	248- 74
GD404	GIC	248- 68
GD405	GIC	248- 69
GD406	GIC	251- 39
GD407	GIC	250- 47
GD408	GIC	252- 53
GD408A	♦ NECJ	599- 85
GD408B	♦ NECJ	599- 86
GD408C	♦ NECJ	599- 87
GD408D	♦ NECJ	599- 88
GD409	GIC	251- 40
GD410	GIC	255- 27
GD411	GIC	254- 11
GD411A	♦ NECJ	599- 89
GD411B	♦ NECJ	599- 90
GD411C	♦ NECJ	599- 91
GD411D	♦ NECJ	599- 92
GD411E	NECJ	599- 93
GD508A	♦ NECJ	599- 94
GD508B	♦ NECJ	599- 95
GD508C	♦ NECJ	599- 96
GD508D	♦ NECJ	599- 97
GD508E	NECJ	599- 98
GD511A	♦ NECJ	599- 99
GD511B	♦ NECJ	599-100
GD511C	♦ NECJ	599-101
GD511D	♦ NECJ	599-102
GD511E	♦ NECJ	599-103
GD514A	♦ NECJ	599-104
GD514B	♦ NECJ	599-105
GD514C	♦ NECJ	599-106
GD514D	♦ NECJ	599-107
GD514E	♦ NECJ	599-108
GD518A	♦ NECJ	599-109
GD518B	♦ NECJ	599-110
GD518C	♦ NECJ	600- 1
GEM1	♦ MULB	514- 84
GEM2	♦ MULB	514- 85
GEM3	♦ MULB	514- 86
GEM4	♦ MULB	514- 87
GEM8	MULB	516- 40
GEM9	MULB	516- 41
GER4001	♦ GESY	294- 35
GER4002	♦ GESY	301- 25
GER4003	♦ GESY	312- 22
GER4004	♦ GESY	331- 4
GER4005	♦ GESY	348- 31
GER4006	♦ GESY	361- 9
GER4007	♦ GESY	371- 44
GEX541	♦ MULB	298- 75
GEX542	♦ MULB	309- 35
GHC801	PHIL	600- 2
GHC801A	PHIL	600- 3
GHC801B	PHIL	600- 4
GI82AG	GIC	575- 15
GJ3M	AEIL	311- 66
GJ4M	AEIL	298- 54
GJ5M	AEIL	321- 82
GJ6M	AEIL	307- 80
GL300	SRPJ	597- 45
GL503	SRPJ	597- 46
GLA28,A,B	♦ CODI	166- 65
GLA31,A,B	♦ CODI	166-148
GLA35,A,B	♦ CODI	167-102
GLA39,A,B	♦ CODI	168- 70
GLA43,A,B	♦ CODI	169- 65
GLA47,A,B	♦ CODI	170- 56
GLA51,A,B	♦ CODI	171-101
GLA56,A,B	♦ CODI	172-119
GLA62,A,B	♦ CODI	174-110
GLA68,A,B	♦ CODI	177- 1
GLA75,A,B	♦ CODI	179- 51
GLA82,A,B	♦ CODI	181-107
GLA91,A,B	♦ CODI	185- 32
GLA100,A,B	♦ CODI	187-100
GLE103	SRPJ	597- 47
GND500	SRPJ	597- 48
GP2	ROSG	575- 61
GP10	ROSG	575- 62
GP16	ROSG	575- 63
GP130	♦ GIC	267- 25
GP150	♦ GIC	270- 10
GP175	♦ GIC	274- 69
GP199	♦ GIC	276-108
GP330	♦ GIC	267- 49
GP340	♦ GIC	269- 13
GP350	♦ GIC	270- 87
GP360	♦ GIC	273- 35
GP500	SRPJ	600- 5
GPC215	PHIL	600- 6
GPC215A	PHIL	600- 7
GPM1NA	NECJ	247-108
GPM1NB	NECJ	247-109
GPM2NA	NECJ	247- 92
GR1	SOIF	281- 30
GR2	SOIF	283-104
GR4	SOIF	284- 76
GR05	SOIF	272- 51
GR16	♦ TNC	295- 12
GR17	♦ TNC	302- 34
GR18	♦ TNC	313- 37
GR19	♦ TNC	322- 95

TYPE No.	MFRS	Pg&Line
GR20	♦ TNC	332- 25
GR21	♦ TNC	341- 56
GR22	♦ TNC	349- 46
GR23	♦ TNC	362- 1
GR24	♦ TNC	372- 26
GR612	SOIF	287- 12
GREA4	USS	184-118
GREA7	USS	184-119
GREA7A	USS	184-120
GREA10B	USS	184-121
GREA14	USS	184-122
GREA14A	USS	184-123
GREA19B	USS	184-124
GREA29A	USS	184-125
GREA35	USS	184-126
GREA38B	USS	184-127
GREA70	USS	184-128
GREA72A	USS	184-129
GREA95B	USS	184-130
GREA145A	USS	184-131
GREA190B	USS	184-132
GSB100	NECJ	263- 56
GSM51	GIC	249- 6
GSM52	GIC	249- 20
GSM53	GIC	252-106
GSM54	GIC	253- 10
GSM56	GIC	277-106
GSM57	GIC	275- 93
GSM482	GIC	254- 31
GSM483	GIC	256- 79
GSM914	GIC	277- 63
GT40	♦ ECC	600- 8
GZ3 6	LTTF	168- 16
GZ3 9	LTTF	168-166
GZ4.3	LTTF	169-165
GZ4 7	LTTF	170-171
GZ5.1	LTTF	172- 14
GZ5.6	LTTF	173- 83
GZ6A	SOIF	178-134
GZ6 2	LTTF	175- 58
GZ6 8	LTTF	178- 8
GZ7.5	LTTF	180- 53
GZ8A	SOIF	183- 46
GZ8 2	LTTF	182-101
GZ9 1	LTTF	186- 33
GZ10	LTTF	188-113
GZ10A	SOIF	189- 68
GZ10B	SOIF	234- 33
GZ11	LTTF	190-106
GZ12	LTTF	193- 5
GZ12A	SOIF	193-160
GZ12B	SOIF	237- 16
GZ13	LTTF	195- 43
GZ15	LTTF	198- 11
GZ15A	SOIF	198-162
GZ15B	SOIF	240- 31
GZ18	LTTF	202-104
GZ18A	SOIF	203- 55
GZ18B	SOIF	242-153
GZ22	LTTF	207- 30
GZ22A	SOIF	207-177
GZ27	LTTF	211- 94
GZ27A	SOIF	212- 47
GZ33A	SOIF	216- 2
GZ39A	SOIF	218-164
GZ47A	SOIF	222- 2
GZ56A	SOIF	225- 44
GZ68A	SOIF	228- 41
GZ82A	SOIF	231- 30
H5A3	EDL	297- 68
H5B3	EDL	305- 85
H5C3	EDL	317- 25
H5D3	EDL	319- 70
H5E3	EDL	325- 67
H5F3	EDL	327- 81
H5G3	EDL	336- 46
H5H3	EDL	343-105
H5K3	EDL	353- 18
H5M3	EDL	357- 72
H5N3	EDL	365- 32
H11	♦ TII	575- 64
	TIIB	
H35	♦ TII	575- 65
	TIIB	
H38	♦ TII	575- 66
	TIIB	
	SCN	293- 81
H60	♦ TII	575- 67
	TIIB	
H61	♦ TII	575- 68
	TIIB	
H62	♦ TII	575- 69
	TIIB	
H100	SCN	300- 35
H121	AEL	584- 52
H200	SCN	311- 11
H300	SCN	321- 41
H400	SCN	329- 97
H500	SCN	340- 15
H600	SCN	347- 18
H800	SCN	360- 14
H1000	SCN	370- 58
HA50	SCN	294- 21
HA100	SCN	300-110
HA200	SCN	311- 99
HA300	SCN	321- 96
HA400	SCN	330- 81
HA500	SCN	340- 70
HA600	SCN	347-110
HA800	SCN	360- 90
HA1000	SCN	371- 16
HAB005	EDI	295- 69
HAB010	EDI	302-109
HAB020	EDI	314- 9

△-Registered with JEDEC by this manufacturer

♦-Copy of mfr's data sheet may be ordered from D.A.T.A.

1. TYPE No. CROSS INDEX

IN TYPE NUMBER SEQUENCE

TYPE No.	MFRS	Pg&Line
HAB040	EDI	333- 1
HAB060	EDI	350- 19
HAB080	EDI	362- 80
HAB100	EDI	372- 87
HAR10	♦ CRL	301- 26
HAR15	♦ CRL	307- 87
HAR20	♦ CRL	312- 23
HB1	♦ CRL	246- 21
HB2	♦ CRL	292- 28
HB3	♦ CRL	248- 82
HB50	SCN	295- 34
HB100	SCN	302- 61
HB200	SCN	313- 67
HB300	SCN	323- 4
HB400	SCN	332- 53
HB500	SCN	341- 76
HB600	SCN	349- 73
HB800	SCN	362- 23
HB1000	SCN	372- 47
HC30	SCN	292- 57
	SOD	
HC50	SCN	295- 77
HC67	SCN	294- 59
	SOD	
HC67F	SOD	294- 57
HC68	SCN	301- 53
	SOD	
HC68F	SOD	301- 51
HC69	SCN	312- 53
	SOD	
HC69F	SOD	312- 51
HC70F	SOD	331- 32
HC71	SCN	348- 58
	SOD	
HC71F	SOD	348- 56
HC72	SCN	361- 30
	SOD	
HC72F	SOD	361- 28
HC73	SCN	371- 64
	SOD	
HC73F	SOD	371- 62
HC100	SCN	303- 8
HC200	SCN	314- 17
HC300	SCN	323- 47
HC300F	SCN	322- 20
HC400	SCN	333- 10
HC500Δ	SOD	340-100
HC500#	SCN	342- 4
HC500F	SOD	340- 98
HC600	SCN	350- 28
HC700	SOD	331- 35
HC800	SCN	362- 86
HC1000	SCN	372- 93
HC1200	SOD	378- 48
HC1200F	SOD	378- 46
HCV	SOD	292- 22
HD1810	EMLS	272- 27
HD1811	EMLS	267- 73
HD1812	EMLS	264- 60
HD1840	EMLS	267- 71
HD1841	EMLS	265- 88
HD1842	EMLS	263- 58
HD1870	EMLS	265- 8
HD1871	EMLS	264- 58
HD1872	EMLS	263- 55
HD2135A	EMLS	274- 5
HD4101	EMLS	267- 75
HD4102	EMLS	278- 11
HD5000	EMLS	263-109
HD5001	EMLS	263-110
HD5004	EMLS	264- 1
HDS9001	EMLS	277- 64
HDS9009	EMLS	270- 88
HDS9010	EMLS	267- 50
HEP101-RT	♦ MOTA	187-164
HEP102-RT	♦ MOTA	168- 17
HEP103-RT	♦ MOTA	175- 59
HEP104-RT	♦ MOTA	186- 34
HEP105-RT	♦ MOTA	193- 6
HEP134-RT	♦ MOTA	298- 34
HEP135-RT	♦ MOTA	292- 67
HEP151-RT	♦ MOTA	296- 79
HEP153-RT	♦ MOTA	315- 87
HEP154-RT	♦ MOTA	294- 36
HEP156-RT	♦ MOTA	312- 24
HEP157-RT	♦ MOTA	331- 5
HEP158-RT	♦ MOTA	348- 32
HEP159-RT	♦ MOTA	361- 10
HEP160-RT	♦ MOTA	371- 45
HEP161-RT	♦ MOTA	295- 57
HEP162-RT	♦ MOTA	313-104
HEP165-RT	♦ MOTA	298- 41
HEP170-RT	♦ MOTA	372- 57
HEP175-RT	♦ MOTA	294- 37
HEP176-RT	♦ MOTA	312- 25
HEP177-RT	♦ MOTA	331- 6
HEP178-RT	♦ MOTA	348- 33
HEP300-RT	♦ MOTA	419- 1
HEP302-RT	♦ MOTA	434- 36
HEP304-RT	♦ MOTA	419- 90
HEP305-RT	♦ MOTA	419- 91
HEP306-RT	♦ MOTA	435-108
HEP307-RT	♦ MOTA	435-109
HEP311-RT	♦ MOTA	600- 9
HEP320-RT	♦ MOTA	416- 82
HEP340-RT	♦ MOTA	499- 1
HEP600-RT	♦ MOTA	316- 38
HEP601-RT	♦ MOTA	316- 39
HEP602-RT	♦ MOTA	170-172
HEP603-RT	♦ MOTA	173- 84
HEP604-RT	♦ MOTA	190-107
HEP605-RT	♦ MOTA	195- 44
HEP606-RT	♦ MOTA	196- 85
HEP607-RT	♦ MOTA	198- 12

TYPE No.	MFRS	Pg&Line
HEP608-RT	♦ MOTA	211- 95
HEP609-RT	♦ MOTA	215- 60
HEP610-RT	♦ MOTA	224-108
HEP611-RT	♦ MOTA	226- 58
HEP612-RT	♦ MOTA	230-111
HEP613-RT	♦ MOTA	235- 56
HEP620-RT	♦ MOTA	451- 14
HEP621-RT	♦ MOTA	451- 15
HEP622-RT	♦ MOTA	451- 16
HEPR0080-RT	♦ MOTA	295- 58
HEPR0081-RT	♦ MOTA	302- 94
HEPR0082-RT	♦ MOTA	313-105
HEPR0084-RT	♦ MOTA	332- 96
HEPR0086-RT	♦ MOTA	350- 3
HEPR0090-RT	♦ MOTA	295- 59
HEPR0091-RT	♦ MOTA	302- 95
HEPR0092-RT	♦ MOTA	313-106
HEPR0094-RT	♦ MOTA	332- 97
HEPR0096-RT	♦ MOTA	350- 4
HEPR0097-RT	♦ MOTA	362- 67
HEPR0098-RT	♦ MOTA	372- 78
HEPR0130-RT	♦ MOTA	296- 49
HEPR0131-RT	♦ MOTA	304- 24
HEPR0132-RT	♦ MOTA	315- 49
HEPR0134-RT	♦ MOTA	334- 48
HEPR0136-RT	♦ MOTA	351- 61
HEPR0137-RT	♦ MOTA	363- 96
HEPR0138-RT	♦ MOTA	373- 78
HEPR0160-RT	♦ MOTA	296- 80
HEPR0161-RT	♦ MOTA	304- 55
HEPR0162-RT	♦ MOTA	315- 88
HEPR0164-RT	♦ MOTA	334- 95
HEPR0166-RT	♦ MOTA	351-101
HEPR0220-RT	♦ MOTA	297- 9
HEPR0222-RT	♦ MOTA	316- 40
HEPR0250-RT	♦ MOTA	297- 40
HEPR0251-RT	♦ MOTA	305- 39
HEPR0253-RT	♦ MOTA	316- 82
HEPR0254-RT	♦ MOTA	325- 25
HEPR0255-RT	♦ MOTA	335- 87
HEPR0256-RT	♦ MOTA	343- 72
HEPR0257-RT	♦ MOTA	352- 73
HEPR1001-RT	♦ MOTA	416- 83
HEPR1002-RT	♦ MOTA	422- 21
HEPR1003-RT	♦ MOTA	423- 87
HEPR1004-RT	♦ MOTA	430- 34
HEPR1005-RT	♦ MOTA	432- 78
HEPR1220-RT	♦ MOTA	419- 55
HEPR1221-RT	♦ MOTA	435- 18
HEPR1222-RT	♦ MOTA	451- 17
HEPR1223-RT	♦ MOTA	464- 33
HEPR1241-RT	♦ MOTA	419- 56
HEPR1242-RT	♦ MOTA	425-100
HEPR1243-RT	♦ MOTA	435- 19
HEPR1244-RT	♦ MOTA	443- 91
HEPR1245-RT	♦ MOTA	451- 18
HEPR1246-RT	♦ MOTA	458- 21
HEPR1247-RT	♦ MOTA	464- 34
HEPR1300-RT	♦ MOTA	415- 50
HEPR1301-RT	♦ MOTA	420- 13
HEPR1302-RT	♦ MOTA	426-108
HEPR1304-RT	♦ MOTA	436- 37
HEPR1306-RT	♦ MOTA	444- 67
HEPR1307-RT	♦ MOTA	452- 29
HEPR1471-RT	♦ MOTA	420- 62
HEPR1472-RT	♦ MOTA	427- 93
HEPR1473-RT	♦ MOTA	437- 24
HEPR1475-RT	♦ MOTA	453- 23
HEPR1721-RT	♦ MOTA	498-102
HEPR1722-RT	♦ MOTA	498-107
HEPR1723-RT	♦ MOTA	499- 2
HEPR1725-RT	♦ MOTA	499- 14
HEPR1750-RT	♦ MOTA	498-103
HEPR1751-RT	♦ MOTA	499- 5
HEPR1752-RT	♦ MOTA	499- 17
HEPR1781-RT	♦ MOTA	498-104
HEPR1782-RT	♦ MOTA	498-108
HEPR1783-RT	♦ MOTA	499- 8
HEPR1785-RT	♦ MOTA	499- 20
HEPR2001-RT	♦ MOTA	600- 10
HEPR2021-RT	♦ MOTA	600- 11
HEPZ0206-RT	♦ MOTA	167- 31
HEPZ0208-RT	♦ MOTA	168-133
HEPZ0210-RT	♦ MOTA	170-132
HEPZ0211-RT	♦ MOTA	171-176
HEPZ0212-RT	♦ MOTA	173- 40
HEPZ0214-RT	♦ MOTA	175- 15
HEPZ0215-RT	♦ MOTA	177-112
HEPZ0217-RT	♦ MOTA	182- 27
HEPZ0219-RT	♦ MOTA	185-138
HEPZ0220-RT	♦ MOTA	188- 27
HEPZ0222-RT	♦ MOTA	192- 96
HEPZ0225-RT	♦ MOTA	197-116
HEPZ0228-RT	♦ MOTA	202- 23
HEPZ0230-RT	♦ MOTA	204-165
HEPZ0231-RT	♦ MOTA	206-137
HEPZ0234-RT	♦ MOTA	211- 20
HFR5	♦ CRL	272- 6
HFR10	♦ CRL	278- 66
HFR15	♦ CRL	281- 19
HFR20	♦ CRL	282- 20
HFSD1	♦ SAKJ	285- 89
HFSD1A	♦ SAKJ	287- 36
	TOSJ	
HFSD1B	♦ SAKJ	287- 97
HFSD1C	♦ SAKJ	288- 45
HFSD1Z	SAKJ	283- 33
HG2	♦ GIC	389- 66
HG3	♦ GIC	394- 6
HG4	♦ GIC	396- 98
HG5	♦ GIC	399- 46
HG1001	EMLS	278- 12
HG1002	EMLS	278- 13
HG1003	EMLS	278- 14

TYPE No.	MFRS	Pg&Line
HG1004	EMLS	278- 15
HG1005	EMLS	278- 16
HG1006	EMLS	278- 17
HG1007	EMLS	275- 94
HG1008	EMLS	275- 95
HG1009	EMLS	275- 96
HG1010	EMLS	275- 97
HG1011	EMLS	275- 98
HG1012	EMLS	275- 99
HG1090	EMLS	248- 2
HG5001	EMLS	253- 41
HG5002	EMLS	251-110
HG5003	EMLS	253- 42
HG5004	EMLS	252- 1
HG5005	EMLS	253- 43
HG5006	EMLS	252- 2
HG5007	EMLS	249- 15
HG5008	EMLS	249- 16
HG5009	EMLS	249- 17
HG5020	EMLS	253-107
HG5078	EMLS	249-107
HG5079	EMLS	247- 60
HG5085	EMLS	246- 14
HG5808	EMLS	248- 32
HGR5	♦ CRL	250- 66
HGR10	♦ CRL	254- 40
HGR20	♦ CRL	257- 56
HGR30	♦ CRL	258-105
HGR40	♦ CRL	259- 72
HGR60	CRL	260- 17
HIB005	EDI	295- 70
HIB010	EDI	302-110
HM6.8,A,B	♦ CRL	177- 60
HM7.5,A,B	♦ CRL	179-112
HM8.2,A,B	♦ CRL	181-168
HM9.1,A,B	♦ CRL	185- 92
HM10,A,B	♦ CRL	187-165
HM11,A,B	♦ CRL	189-197
HM12,A,B	♦ CRL	192- 44
HM13,A,B	♦ CRL	194-124
HM15,A,B	♦ CRL	197- 72
HM16,A,B	♦ CRL	199- 74
HM18,A,B	♦ CRL	201-156
HM20,A,B	♦ CRL	204-127
HM22,A,B	♦ CRL	206- 97
HM24,A,B	♦ CRL	208- 94
HM27,A,B	♦ CRL	210-152
HM30,A,B	♦ CRL	212-193
HM33,A,B	♦ CRL	214-141
HM36,A,B	♦ CRL	216- 89
HM39,A,B	♦ CRL	217-162
HM43,A,B	♦ CRL	219- 67
HM47,A,B	♦ CRL	220-189
HM51,A,B	♦ CRL	222-141
HM56,A,B	♦ CRL	224- 33
HM62,A,B	♦ CRL	225-172
HM68,A,B	♦ CRL	227- 42
HM75,A,B	♦ CRL	228-142
HM82,A,B	♦ CRL	230- 37
HM91,A,B	♦ CRL	231-160
HM100,A,B	♦ CRL	233- 16
HM110,A,B	♦ CRL	234-152
HM120,A,B	♦ CRL	236- 14
HM130,A,B	♦ CRL	237- 57
HM150,A,B	♦ CRL	239- 28
HM160,A,B	♦ CRL	240- 62
HM180,A,B	♦ CRL	241-159
HM200,A,B	♦ CRL	243- 39
HMG251	SCA	267- 93
HMG252	SCA	265-105
HMG625	SCA	268- 14
HMG625A	SCA	268- 6
HMG626	SCA	272-108
HMG626A	SCA	272- 99
HMG627	SCA	279-105
HMG659	SCA	273- 90
HMG662	SCA	279- 88
HMG662A	SCA	279- 89
HMG663	SCA	279- 90
HMG663A	SCA	279- 56
HMG789	SCA	268- 7
HMG790	SCA	267-102
HMG791	SCA	268- 8
HMG792	SCA	268- 9
HMG793	SCA	273-106
HMG794	SCA	273- 79
HMG795	SCA	273-107
HMG796	SCA	273-108
HMG811	SCA	266- 3
HMG812	SCA	267-103
HMG813	SCA	265- 27
HMG814	SCA	269- 71
HMG818	SCA	276- 54
HMG837A	SCA	279- 57
HMG840	SCA	272- 82
HMG844	SCA	279- 91
HMG891	SCA	273- 91
HMG897	SCA	272-109
HMG898	SCA	272- 83
HMG899	SCA	279- 58
HMG900	SCA	279- 59
HMG901	SCA	279- 60
HMG903	SCA	269- 14
HMG903A	SCA	269- 15
HMG904	SCA	267- 51
HMG904A	SCA	267- 52
HMG905	SCA	265- 73
HMG905A	SCA	265- 74
HMG906	SCA	265- 75
HMG906A	SCA	265- 76
HMG907	SCA	267- 53
HMG907A	SCA	267- 54
HMG908	SCA	269- 16
HMG914	SCA	277- 65

TYPE No.	MFRS	Pg&Line
HMG914A	SCA	277- 66
HMG914B	SCA	277- 67
HMG915	SCA	274- 18
HMG916	SCA	277- 68
HMG916A	SCA	277- 69
HMG916B	SCA	277- 70
HMG917	SCA	268-106
HMG925	SCA	269- 63
HMG926	SCA	269- 64
HMG927	SCA	274- 25
HMG929	SCA	266- 22
HMG930	SCA	274- 61
HMG948	SCA	269- 83
HMG993	SCA	265- 11
HMG3062	SCA	274- 70
HMG3063	SCA	274- 71
HMG3064	SCA	275- 43
HMG3065	SCA	274- 72
HMG3066	SCA	274- 73
HMG3067	SCA	267- 26
HMG3068	SCA	267- 83
HMG3069	SCA	274- 20
HMG3123	SCA	269- 17
HMG3124	SCA	269- 18
HMG3206	SCA	277- 71
HMG3207	SCA	273- 54
HMG3257	SCA	277- 14
HMG3258	SCA	277- 72
HMG3567	SCA	274- 74
HMG3593	SCA	269- 44
HMG3594	SCA	273- 55
HMG3596	SCA	267- 55
HMG3598	SCA	275- 44
HMG3600	SCA	270- 89
HMG3601	SCA	277-101
HMG3602	SCA	275- 72
HMG3603	SCA	271- 6
HMG3604	SCA	274- 75
HMG3605	SCA	268- 98
HMG3606	SCA	274- 76
HMG3607	SCA	274- 77
HMG3608	SCA	268- 99
HMG3609	SCA	274- 78
HMG3669	SCA	274- 48
HMG3722	SCA	271- 59
HMG3731	SCA	277- 15
HMG3872	SCA	276- 82
HMG3873	SCA	270- 90
HMG3954	SCA	270- 91
HMG3956	SCA	268-100
HMG4009	SCA	268- 49
HMG4043	SCA	268- 50
HMG4086	SCA	274- 49
HMG4092	SCA	269-105
HMG4147	SCA	267- 76
HMG4148	SCA	277- 73
HMG4149	SCA	277- 74
HMG4150	SCA	270- 92
HMG4151	SCA	274- 79
HMG4152	SCA	268-101
HMG4153	SCA	274- 80
HMG4154	SCA	268- 51
HMG4305	SCA	274- 81
HMG4308	SCA	276-109
HMG4313	SCA	277- 75
HMG4314	SCA	276-110
HMG4317	SCA	277- 1
HMG4319	SCA	275- 45
HMG4322	SCA	270- 93
HMG4373	SCA	277- 76
HMG4375	SCA	273- 56
HMG9001	SCA	277- 2
HMG9002	SCA	277- 3
HMG9003	SCA	274- 82
HMG9004	SCA	274- 83
HMG9005	SCA	274- 84
HMG9006	SCA	270- 11
HMG9007	SCA	270- 12
HMG9008	SCA	270- 13
HMG9009	SCA	270- 14
HMG9010	SCA	267- 27
HND1	♦ CRL	600- 12
HP5082-0103	HPA	265- 80
HP5082-0112	HPA	268- 31
HP5082-0113	HPA	268- 43
HP5082-0114	HPA	268- 38
HP5082-0132	HPA	268- 70
HP5082-0133	HPA	268- 74
HP5082-0134	HPA	268- 75
HP5082-0151	HPA	264- 90
HP5082-0153	HPA	266- 25
HP5082-0154	HPA	266- 30
HP5082-0180	HPA	274- 9
HP5082-0240	HPA	274- 10
HP5082-0241	HPA	274- 11
HP5082-0242	HPA	268- 22
HP5082-0243	HPA	268- 23
HP5082-0251	HPA	264- 87
HP5082-0252	HPA	264- 88
HP5082-0253	HPA	266- 23
HP5082-0254	HPA	266- 26
HP5082-0299	HPA	597- 19
HP5082-0300	HPA	274- 21
HP5082-0310	HPA	597- 20
HP5082-0320	HPA	597- 21
HP5082-0335	HPA	597- 22
HP5082-0360	HPA	597- 23
HP5082-0365	HPA	597- 24
HP5082-0370	HPA	597- 25
HP5082-0375	HPA	597- 26
HP5082-0386	HPA	597- 27
HP5082-0400	♦ HPA	594- 99
HP5082-0401	♦ HPA	594-100
HP5082-0431	♦ HPA	594-101

TYPE No.	MFRS	Pg&Line
HP5082-0432	♦ HPA	594-102
HP5082-0433	♦ HPA	594-103
HP5082-0434	♦ HPA	594-104
HP5082-0435	♦ HPA	594-105
HP5082-0436	♦ HPA	594-106
HP5082-0437	♦ HPA	594-107
HP5082-0438	♦ HPA	594-108
HP5082-0439	♦ HPA	594-109
HP5082-1001	HPA	268- 48
HP5082-1002	HPA	268- 52
HP5082-1003	HPA	266- 35
HP5082-1004	HPA	266- 42
HP5082-1006	HPA	269-109
HP5082-2301	HPA	267- 7
HP5082-2302	HPA	267- 8
HP5082-2303	HPA	265- 57
HP5082-2305	HPA	267- 9
HP5082-2350	HPA	510- 25
HP5082-2351	HPA	600- 13
HP5082-2353	HPA	510- 26
HP5082-2354	HPA	600- 14
HP5082-2365	HPA	510- 27
HP5082-2366	HPA	510- 28
HP5082-2374	HPA	600- 15
HP5082-2400	HPA	510- 29
HP5082-2520	HPA	510- 42
HP5082-2521	HPA	510- 43
HP5082-2523	HPA	510- 44
HP5082-2524	HPA	510- 45
HP5082-2550	HPA	510- 46
HP5082-2551	HPA	510- 47
HP5082-2552	HPA	600- 16
HP5082-2553	HPA	510- 48
HP5082-2554	HPA	510- 49
HP5082-2555	HPA	600- 17
HP5082-2563	HPA	510- 50
HP5082-2564	HPA	510- 51
HP5082-2565	HPA	510- 52
HP5082-2566	HPA	510- 53
HP5082-2602	HPA	512- 16
HP5082-2701	HPA	513- 59
HP5082-2702	HPA	513- 60
HP5082-2703	HPA	513- 61
HP5082-2707	HPA	600- 18
HP5082-2711	HPA	513- 62
HP5082-2713	HPA	513- 63
HP5082-2721	HPA	515- 95
HP5082-2723	HPA	515- 96
HP5082-2740	HPA	593- 14
HP5082-2750	HPA	593- 15
HP5082-2751	HPA	593- 16
HP5082-2752	HPA	593- 17
HP5082-2755	HPA	593- 18
HP5082-2758	HPA	593- 19
HP5082-2759	HPA	593- 20
HP5082-2800	HPA	274- 28
		593- 21
HP5082-2810	HPA	593- 22
HP5082-2811	HPA	593- 23
HP5082-2817	HPA	510- 21
HP5082-2824	HPA	593- 24
HP5082-2827	HPA	510- 30
HP5082-2833	HPA	593- 25
HP5082-2900	HPA	263-105
HP5082-3002	HPA	600- 19
HP5082-3003	HPA	600- 20
HP5082-3039	HPA	600- 21
HP5082-3040	HPA	600- 22
HP5082-3041	HPA	600- 23
HP5082-3042	HPA	600- 24
HP5082-3043	HPA	600- 25
HP5082-3080	HPA	600- 26
HP5082-3101	HPA	600- 27
HP5082-3102	HPA	600- 28
HP5082-3201	HPA	600- 29
HP5082-3202	HPA	600- 30
HP5082-4104	HPA	597- 49
HP5082-4107	HPA	597- 50
HP5082-4120	HPA	597- 51
HP5082-4201	♦ HPA	575- 70
HP5082-4203	♦ HPA	575- 71
HP5082-4204	♦ HPA	575- 72
HP5082-4205	♦ HPA	575- 73
HP5082-4207	♦ HPA	575- 74
HP5082-4220	♦ HPA	575- 75
HP5082-4310	HPA	597- 52
HP5082-4320	HPA	597- 53
HP5082-4403	HPA	597- 54
HP5082-4405	HPA	597- 55
HP5082-4415	HPA	597- 56
HP5082-4417	HPA	597- 57
HP5082-4420	HPA	597- 58
HP33001A	HPA	584- 53
HP33002A	HPA	584- 54
HP33101A	HPA	584- 55
HP33102A	HPA	584- 56
HP33201A	HPA	584- 57
HP33202A	HPA	584- 58
HPC4-01	CRL	575- 76
HPC5-01	CRL	575- 77
HPC6-01	CRL	575- 78
HPC7-01	CRL	575- 79
HPC8-01	CRL	575- 80
HPC9-01	CRL	575- 81
HPC10-01	CRL	575- 82
HPC10-02	CRL	575- 83
HR2.3	♦ CRL	165-147
HR2.8	♦ CRL	166- 66
HR3.8	♦ CRL	168- 53
HR4 4	♦ CRL	170- 20
HR5.4	♦ CRL	172- 73
HR6.5	♦ CRL	176-126
HR9.0	♦ CRL	184-107
HR11	♦ CRL	189-145

Δ-Registered with JEDEC by this manufacturer

♦-Copy of mfr's data sheet may be ordered from D.A.T.A.

1. TYPE No. CROSS INDEX

IN TYPE NUMBER SEQUENCE

TYPE No.	MFRS	Pg&Line
HR100	♦SCO	303- 15
HR200	♦SCO	314- 24
HR400	♦SCO	333- 17
HR600	♦SCO	350- 35
HR800	♦SCO	362- 91
HR878A	UNI	421-101
HR878B	UNI	421-102
HR879A	UNI	423- 45
HR879B	UNI	423- 46
HR881A	UNI	432- 47
HR881B	UNI	432- 48
HR1000	♦SCO	372- 98
HR3027	UNI	416- 70
HR3028	UNI	422- 11
HR3029	UNI	423- 72
HR3030	UNI	416- 71
HR3031	UNI	422- 12
HR3032	UNI	423- 73
HRE16	USS	199- 14
HRE16A	USS	199- 15
HRE18.5	USS	203- 91
HRE18 5A	USS	203- 92
HRE25 5	USS	210- 81
HRE25 5A	USS	210- 82
HRE28	USS	212- 85
HRE28A	USS	212- 86
HRE32	USS	214- 79
HRE32A	USS	214- 80
HRE34 5	USS	216- 43
HRE34 5A	USS	216- 44
HRE41 5	USS	219- 32
HRE41 5A	USS	219- 33
HRE48	USS	222- 29
HRE48A	USS	222- 30
HRE50 5	USS	222-121
HRE50 5A	USS	222-122
HRE53.5	USS	223-193
HRE53 5A	USS	223-194
HRE56.5	USS	225- 73
HRE56 5A	USS	225- 74
HRE60	USS	225- 98
HRE60A	USS	225- 99
HRE62 5	USS	226-177
HRE62 5A	USS	226-178
HRE64	USS	226-182
HRE64A	USS	226-183
HRE66 5	USS	227- 6
HRE66 5A	USS	227- 7
HRE69	USS	228- 67
HRE69A	USS	228- 68
HRE73 5	USS	228-116
HRE73 5A	USS	228-117
HRE76	USS	229-167
HRE76A	USS	229-168
HRE80	USS	229-184
HRE80A	USS	229-185
HRE82 5	USS	231- 52
HRE82 5A	USS	231- 53
HRE89	USS	231-110
HRE89A	USS	231-111
HRE96	USS	232-173
HRE96A	USS	232-174
HS1	CRL	165- 20
HS2	CRL	165- 7
HS3	CRL	165- 25
HS4	CRL	165- 8
HS5	CRL	165- 9
HS6	CRL	165- 32
HS7	CRL	165- 65
HS8	CRL	165- 77
HS9	CRL	165- 84
HS10	CRL	165-129
HS11	CRL	165-150
HS12	CRL	166- 1
HS13	CRL	166- 74
HS14	CRL	166-150
HS30	♦FERB	399- 79
HS31	♦FERB	403- 2
HS32	♦FERB	406- 12
HS33	♦FERB	409- 12
HS40A	♦FERB	399- 80
HS41A	♦FERB	403- 1
HS42A	♦FERB	406- 11
HS43A	♦FERB	409- 13
HS50	♦FERB	401- 5
HS52	♦FERB	405- 89
HS53	♦FERB	407- 28
HS54	♦FERB	408- 44
HS403	♦FERB	408- 24
HS403B	♦FERB	408- 25
HS404	♦FERB	409-110
HS1001	EMLS	255-103
HS1002	EMLS	255-104
HS1003	EMLS	255-105
HS1004	EMLS	250- 35
HS1005	EMLS	250- 36
HS1006	EMLS	250- 37
HS1007	EMLS	255- 90
HS1008	EMLS	255- 91
HS1009	EMLS	255- 92
HS1010	EMLS	250- 20
HS1011	EMLS	250- 21
HS1012	EMLS	250- 22
HS1020	EMLS	257- 24
HS1395	EMLS	267- 77
HS2027	EMLS	166- 16
HS2030	EMLS	166- 85
HS2033	EMLS	166-161
HS2036	EMLS	167-118
HS2039	EMLS	168- 71
HS2043	EMLS	169- 66
HS2047	EMLS	170- 57
HS2051	EMLS	171-102
HS2056	EMLS	172-120

TYPE No.	MFRS	Pg&Line
HS2062	EMLS	174-111
HS2068	EMLS	177- 2
HS2075	EMLS	179- 52
HS2082	EMLS	181-108
HS2091	EMLS	185- 33
HS2100	EMLS	187-101
HS2110	EMLS	189-146
HS2120	EMLS	191-187
HS2135	EMLS	196- 2
HS2150	EMLS	197- 20
HS2165	EMLS	199- 27
HS2180	EMLS	201-105
HS2200	EMLS	204- 83
HS2220	EMLS	206- 51
HS2240	EMLS	208- 52
HS2270	EMLS	210-117
HS2300	EMLS	212-155
HS2330	EMLS	214-104
HS3103	EMLS	258- 82
HS3104	EMLS	259- 50
HS3105	EMLS	259- 95
HS3106	EMLS	260- 6
HS3108	EMLS	260- 39
HS3110	EMLS	260- 73
HS7027	EMLS	166- 35
HS7030	EMLS	166-109
HS7033	EMLS	167- 4
HS7036	EMLS	167-155
HS7039	EMLS	168-107
HS7043	EMLS	169-107
HS7047	EMLS	170-105
HS7051	EMLS	171-152
HS7056	EMLS	172-193
HS7062	EMLS	174-184
HS7068	EMLS	177- 61
HS7075	EMLS	179-113
HS7082	EMLS	181-169
HS7091	EMLS	185- 93
HS7100	EMLS	187-166
HS7110	EMLS	189-198
HS7120	EMLS	192- 45
HS7135	EMLS	196- 3
HS7150	EMLS	197- 73
HS7165	EMLS	200-147
HS7180	EMLS	201-157
HS7200	EMLS	204-128
HS7220	EMLS	206- 98
HS7240	EMLS	208- 95
HS7270	EMLS	210-153
HS7300	EMLS	212-194
HS7330	EMLS	214-142
HS9001	EMLS	277- 77
HS9009	EMLS	270- 94
HS9010	EMLS	267- 56
HS9096	EMLS	274- 50
HS9501	EMLS	275- 46
HS9502	EMLS	269- 19
HS9503	EMLS	265- 77
HS9504	EMLS	275- 47
HS9505	EMLS	269- 20
HS9506	EMLS	265- 78
HS9507	EMLS	275- 48
HS9508	EMLS	269- 21
HS9509	EMLS	265- 79
HSC1	EMLS	369- 36
HSC2	EMLS	389- 50
HSC3	EMLS	393-100
HSC4	EMLS	396- 82
HSC5	EMLS	399- 32
HSC6	EMLS	400-102
HSC7	EMLS	402- 27
HSC8	EMLS	403- 64
HSC9	EMLS	404- 66
HSC10	EMLS	405- 73
HSC12	EMLS	407- 20
HSC015	EMLS	384- 6
HSC15	EMLS	408- 35
HSC18	EMLS	409- 53
HSC20	EMLS	410- 12
HSC25	EMLS	411- 23
HSK816	♦SEKG	402- 72
HSK866A	♦SEKG	406- 79
HSK869B	♦SEKG	408- 88
HSK872A	♦SEKG	406- 85
HSK8008	♦SEKG	406- 86
HSKE2500/1100-3		397- 30
	♦SEKG	
HSKE3500/1550-1,2		
	♦SEKG	400- 7
HSKE3500/1550-2		400- 12
	♦SEKG	
HSKE3500/1550-3		399- 88
	♦SEKG	
HSKE3500/1550-5		399- 98
	♦SEKG	
HSKE5000/2200-1,2		
	♦SEKG	404- 10
HSKE5000/2200-2,5		
	♦SEKG	403- 94
HSKE5000/2200-5		403-107
	♦SEKG	
HSKE7500/3300-1,2		
	♦SEKG	406- 49
HSKE7500/3300-4		406- 24
	♦SEKG	
HSKE10000/4500-1,2		
		408- 77
HSKE10000/4500-4		
	♦SEKG	408- 64
HSKE14000/6300-4		
	♦SEKG	410- 32
HSKE17000/7600-3		
	♦SEKG	411- 35
HSP1001	EMLS	256- 75

TYPE No.	MFRS	Pg&Line
HSP1007	EMLS	256- 70
HSP1010	EMLS	251- 22
HSP1011	EMLS	251- 16
HSP1013	EMLS	254- 92
HSP1020	EMLS	257- 25
HT1-050	IDC	262- 19
HT1-050A	IDC	262- 20
HT1-050B	IDC	262- 21
HT1-050C	IDC	262- 22
HT1-050T	IDC	262- 23
HT2-050	IDC	262- 48
HT2-050A	IDC	262- 49
HT2-050B	IDC	262- 50
HT2-050C	IDC	262- 51
HT2-050T	IDC	262- 52
HT3-050	IDC	262- 66
HT3-050A	IDC	262- 67
HT3-050B	IDC	262- 68
HT3-050C	IDC	262- 69
HT3-050T	IDC	262- 70
HT4-050	IDC	262- 83
HT4-050A	IDC	262- 84
HT4-050B	IDC	262- 85
HT4-050C	IDC	262- 86
HT4-050T	IDC	262- 87
HT5-050	IDC	263- 17
HT5-050A	IDC	263- 18
HT5-050B	IDC	263- 19
HT5-050C	IDC	263- 20
HT5-050T	IDC	263- 21
HT6-100	IDC	263- 71
HT6-100A	IDC	263- 72
HT6-100B	IDC	263- 73
HT6-100C	IDC	263- 74
HT6-100T	IDC	263- 75
HT7-100	IDC	263- 92
HT7-100A	IDC	263- 93
HT7-100B	IDC	263- 94
HT7-100C	IDC	263- 95
HT7-100T	IDC	263- 96
HT8-100	IDC	264- 10
HT8-100A	IDC	264- 11
HT8-100B	IDC	264- 12
HT8-100C	IDC	264- 13
HT8-100T	IDC	264- 14
HT25	CRL	573- 83
HT25A	CRL	573- 84
HT95A	CRL	572-106
HT96A	CRL	573- 43
HT1077	CRL	566- 93
HV5-5	♦SCN	398- 92
HV5-5F	♦SCN	398- 93
HV5-7	♦SCN	401-109
HV5-7F	♦SCN	401-110
HV5-10	♦SCN	405- 26
HV5-10F	♦SCN	405- 27
HV5-12	♦SCN	406- 92
HV5-12F	♦SCN	406- 93
HV5-15	♦SCN	408- 3
HV5-15F	♦SCN	408- 4
HV5-20	♦SCN	409- 89
HV5-20F	♦SCN	409- 90
HV5-25	♦SCN	410-109
HV5-25F	♦SCN	411- 1
HV5-30	♦SCN	411-109
HV5-30F	♦SCN	412- 1
HV5-40	♦SCN	412- 67
HV5-40F	♦SCN	412- 68
HV10-5	♦SCN	398- 98
HV10-5F	♦SCN	398- 99
HV10-7	♦SCN	402- 3
HV10-7F	♦SCN	402- 4
HV10-10	♦SCN	405- 31
HV10-10F	♦SCN	405- 32
HV10-12	♦SCN	406- 95
HV10-12F	♦SCN	406- 96
HV10-15	♦SCN	408- 9
HV10-15F	♦SCN	408- 10
HV10-20	♦SCN	409- 94
HV10-20F	♦SCN	409- 95
HV10-25	♦SCN	411- 4
HV10-25F	♦SCN	411- 5
HV10-30	♦SCN	412- 5
HV10-30F	♦SCN	412- 6
HV10-40	♦SCN	412- 71
HV10-40F	♦SCN	412- 72
HV10E1	♦ERI	369- 63
HV10P1	♦ERI	369- 64
HV12A	SOD	377- 50
HV12B	SOD	377- 67
HV12C	SOD	377- 82
HV15	♦SCN	261- 5
HV15E1	♦ERI	384- 24
HV15P1	♦ERI	384- 25
HV16A	SOD	385- 91
HV16B	SOD	385- 94
HV16C	SOD	385-100
HV20	♦SCN	261- 24
HV20A	SOD	389- 40
HV20B	SOD	389- 82
HV20C	SOD	390- 5
HV20E1	♦ERI	389- 71
HV20E2	♦ERI	389- 51
HV20G	♦ERI	389- 33
HV20P1	♦ERI	389- 72
HV20P2	♦ERI	389- 52
HV21	♦SCN	261- 22
HV24A	SOD	391- 62
HV24B	SOD	391- 69
HV24C	SOD	391- 77
HV25-5	♦SCN	399- 3
HV25-5F	♦SCN	399- 4
HV25-7	♦SCN	402- 13
HV25-7F	♦SCN	402- 14

TYPE No.	MFRS	Pg&Line
HV25-10	♦SCN	405- 46
HV25-10F	♦SCN	405- 47
HV25-12	♦SCN	407- 1
HV25-12F	♦SCN	407- 2
HV25-15	♦SCN	408- 19
HV25-15F	♦SCN	408- 20
HV25-20	♦SCN	409-104
HV25-20F	♦SCN	409-105
HV25-25	♦SCN	411- 11
HV25-25F	♦SCN	411- 12
HV25-30	♦SCN	412- 13
HV25-30F	♦SCN	412- 14
HV25-40	♦SCN	412- 77
HV25-40F	♦SCN	412- 78
HV25E2	♦ERI	392- 22
HV25P2	♦ERI	392- 23
HV28A	SOD	393- 13
HV28B	SOD	393- 16
HV28C	SOD	393- 24
HV30	♦SCN	261- 45
HV30E2	♦ERI	393-101
HV30E3	♦ERI	393- 90
HV30G	♦ERI	393- 72
HV30P2	♦ERI	393-102
HV30P3	♦ERI	393- 91
HV32A	SOD	395- 6
HV32B	SOD	395- 9
HV32C	SOD	395- 11
HV36A	SOD	395- 91
HV36B	SOD	395- 97
HV36C	SOD	395- 99
HV40	♦SCN	261- 55
HV40A	SOD	396- 71
HV40B	SOD	396- 95
HV40C	SOD	397- 8
HV40E3	♦ERI	396- 77
HV40E4	♦ERI	396- 75
HV40G	♦ERI	396- 53
HV40P3	♦ERI	396- 78
HV40P4	♦ERI	396- 76
HV50	♦SCN	261- 59
HV50E4	♦ERI	399- 27
HV50E6	♦ERI	399- 7
HV50G	♦ERI	399- 6
HV60	♦SCN	261- 61
HV60E6	♦ERI	400- 79
HV60G	♦ERI	400- 75
HV70E6	♦ERI	402- 17
HV70G	♦ERI	402- 16
HV80E6	♦ERI	403- 42
HV80E	♦ERI	403- 47
HV80G	♦ERI	403- 38
HV90E	♦ERI	404- 59
HV90G	♦ERI	404- 56
HV100E	♦ERI	405- 56
HV100G	♦ERI	405- 50
HV120E	♦ERI	407- 8
HV140E	♦ERI	407- 85
HV160E	♦ERI	408-100
HV180E	♦ERI	409- 46
HV200E	♦ERI	410- 1
HVC15	♦SCN	261- 6
HVC20	♦SCN	261- 26
		410- 37
HVC25	♦SCN	261- 36
HVC30	♦SCN	261- 47
		412- 39
HVC40	♦SCN	261- 57
		412- 88
HVC180	♦SAR	388- 6
HVC240	♦SAR	391- 73
HVC300	♦SAR	394- 12
HVC400	♦SAR	396-107
HVC500	♦SAR	399- 57
HVC600	♦SAR	401- 4
HVC650	♦SAR	401- 88
HVC750	♦SAR	402-103
HVC840	♦SAR	404- 18
HVC960	♦SAR	405- 18
HVC1000	♦SAR	405- 76
HVC1200	♦SAR	407- 17
HVC1500	♦SAR	408- 32
HVC1800	♦SAR	409- 49
HVC2100	♦SAR	410- 52
HVC2500	♦SAR	411- 17
HVC3000	♦SAR	412- 17
HW2G	ERI	392- 12
	♦SCN	
HW3G	ERI	395- 48
	♦SCN	
HW4G	ERI	398- 2
	♦SCN	
HW5G	ERI	400- 34
	♦SCN	
HW6G	ERI	401- 79
	♦SCN	
HW6 8,A,B	♦CRL	178- 9
HW7.5,A,B	♦CRL	180- 54
HW8.2,A,B	♦CRL	182-102
HW9 1,A,B	♦CRL	186- 35
HW10,A,B	♦CRL	188-114
HW11,A,B	♦CRL	190-108
HW12,A,B	♦CRL	193- 7
HW13,A,B	♦CRL	195- 45
HW15,A,B	♦CRL	198- 13
HW16,A,B	♦CRL	199-179
HW18,A,B	♦CRL	202-105
HW20,A,B	♦CRL	205- 50
HW22,A,B	♦CRL	207- 31
HW24,A,B	♦CRL	209- 16
HW27,A,B	♦CRL	211- 96
HW30,A,B	♦CRL	213- 94
HW33,A,B	♦CRL	215- 61
HW36,A,B	♦CRL	216-165

TYPE No.	MFRS	Pg&Line
HW39,A,B	♦CRL	218- 64
HW43,A,B	♦CRL	219-139
HW47,A,B	♦CRL	221- 80
HW51,A,B	♦CRL	223- 28
HW56,A,B	♦CRL	224-109
HW62,A,B	♦CRL	226- 59
HW68,A,B	♦CRL	227-116
HW75,A,B	♦CRL	229- 31
HW82,A,B	♦CRL	230-112
HW91,A,B	♦CRL	232- 48
HW100,A,B	♦CRL	233- 92
HW110,A,B	♦CRL	235- 57
HW120,A,B	♦CRL	236- 80
HW130,A,B	♦CRL	237-118
HW150,A,B	♦CRL	239- 96
HW160,A,B	♦CRL	240-120
HW180,A,B	♦CRL	242- 61
HW200,A,B	♦CRL	243-100
HX20G	♦ERI	289- 6
HX30	♦FERB	399- 82
HX30G	♦ERI	289- 38
HX31	♦FERB	403- 3
HX32	♦FERB	406- 13
HX33	♦FERB	409- 14
HX40G	♦ERI	289- 60
HX50G	♦ERI	289- 87
HX60G	♦ERI	290- 7
HX70G	♦ERI	290- 27
HX80E	♦ERI	290- 54
HX80G	♦ERI	290- 55
HX90E	♦ERI	290- 69
HX90G	♦ERI	290- 70
HX100E	♦ERI	290- 86
HX100G	♦ERI	290- 87
HX120E	♦ERI	290-107
HX140E	♦ERI	291- 9
HX160E	♦ERI	291- 28
HX180E	♦ERI	291- 32
HX200E	♦ERI	291- 42
HZ27	INRB	212- 3
INRC	INRI	
	INRJ	
HZ33	INRB	215-164
INRC	INRI	
	INRJ	
HZ47	INRB	221-155
INRC	INRI	
	INRJ	
HZ56	INRB	225- 6
INRC	INRI	
	INRJ	
HZ68	INRB	228- 8
INRC	INRI	
	INRJ	
HZ82	INRB	230-180
INRC	INRI	
	INRJ	
HZ100	INRB	233-168
INRC	INRI	
	INRJ	
HZ120	INRB	236-150
INRC	INRI	
	INRJ	
HZ150	INRB	239-163
INRC	INRI	
	INRJ	
ii1A12	♦ISO	264- 18
ii1A13	♦ISO	264- 19
ii1A14	ISO	264- 20
ii1A15	ISO	264- 21
ii1A16	ISO	264- 22
ii1A22	♦ISO	264- 23
ii1A23	♦ISO	264- 24
ii1A24	ISO	264- 25
ii1A25	ISO	264- 26
ii1A26	ISO	264- 27
ii1A52	♦ISO	264- 28
ii1A53	♦ISO	264- 29
ii1A54	ISO	264- 30
ii1A55	ISO	264- 31
ii1A56	ISO	264- 32
ii1B12	♦ISO	264- 33
ii1B13	♦ISO	264- 34
ii1B14	ISO	264- 35
ii1B15	ISO	264- 36
ii1B16	ISO	264- 37
ii1B22	♦ISO	264- 38
ii1B23	♦ISO	264- 39
ii1B24	ISO	264- 40
ii1B25	ISO	264- 41
ii1B26	ISO	264- 42
ii1B52	♦ISO	264- 43
ii1B53	♦ISO	264- 44
ii1B54	ISO	264- 45
ii1B55	ISO	264- 46
ii1B56	ISO	264- 47
ii1R0	ISO	292- 11
ii1R2	ISO	292- 13
ii1R3	ISO	292- 14
ii1R4	ISO	292- 15
ii1R5	ISO	292- 17
ii2A12	♦ISO	266- 44
ii2A13	♦ISO	266- 45
ii2A14	ISO	266- 46
ii2A15	ISO	266- 47
ii2A16	ISO	266- 48
ii2A22	♦ISO	266- 49
ii2A23	♦ISO	266- 50
ii2A24	ISO	266- 51
ii2A25	ISO	266- 52
ii2A26	ISO	266- 53
ii2A52	♦ISO	266- 54
ii2A53	♦ISO	266- 55
ii2A54	ISO	266- 56

Δ-Registered with JEDEC by this manufacturer

♦-Copy of mfr's data sheet may be ordered from D.A.T.A.

1. TYPE No. CROSS INDEX

IN TYPE NUMBER SEQUENCE

TYPE No.	MFRS	Pg&Line
ii2A55	ISO	266- 57
ii2A56	ISO	266- 58
ii2B12	♦ISO	266- 59
ii2B13	♦ISO	266- 60
ii2B14	ISO	266- 61
ii2B15	ISO	266- 62
ii2B16	ISO	266- 63
ii2B22	♦ISO	266- 64
ii2B23	♦ISO	266- 65
ii2B24	ISO	266- 66
ii2B25	ISO	266- 67
ii2B26	ISO	266- 68
ii2B52	♦ISO	266- 69
ii2B53	♦ISO	266- 70
ii2B54	ISO	266- 71
ii2B55	ISO	266- 72
ii2B56	ISO	266- 73
ii2C14	ISO	266- 79
ii2C15	ISO	266- 80
ii2C16	ISO	266- 81
ii2C24	ISO	266- 82
ii2C25	ISO	266- 83
ii2C26	ISO	266- 84
ii2C054	ISO	266- 85
ii2C055	ISO	266- 86
ii2C056	ISO	266- 87
ii2R0	ISO	292- 44
ii2R2	ISO	292- 48
ii2R3	ISO	292- 49
ii2R4	ISO	292- 50
ii2R5	ISO	292- 51
ii5A12	♦ISO	270- 29
ii5A13	♦ISO	270- 30
ii5A14	ISO	270- 31
ii5A15	ISO	270- 32
ii5A16	ISO	270- 33
ii5A22	♦ISO	270- 34
ii5A23	♦ISO	270- 35
ii5A24	ISO	270- 36
ii5A25	ISO	270- 37
ii5A26	ISO	270- 38
ii5A52	♦ISO	270- 39
ii5A53	♦ISO	270- 40
ii5A54	ISO	270- 41
ii5A55	ISO	270- 42
ii5A56	ISO	270- 43
ii5B12	♦ISO	270- 44
ii5B13	♦ISO	270- 45
ii5B14	ISO	270- 46
ii5B15	ISO	270- 47
ii5B16	ISO	270- 48
ii5B22	♦ISO	270- 49
ii5B23	♦ISO	270- 50
ii5B24	ISO	270- 51
ii5B25	ISO	270- 52
ii5B26	ISO	270- 53
ii5B52	♦ISO	270- 54
ii5B53	♦ISO	270- 55
ii5B54	ISO	270- 56
ii5B55	ISO	270- 57
ii5B56	ISO	270- 58
ii5C14	ISO	271- 44
ii5C15	ISO	271- 45
ii5C16	ISO	271- 46
ii5C24	ISO	271- 47
ii5C25	ISO	271- 48
ii5C26	ISO	271- 49
ii5C054	ISO	271- 50
ii5C055	ISO	271- 51
ii5C056	ISO	271- 52
ii5R0	ISO	294- 4
ii5R2	ISO	295- 60
ii5R3	ISO	296- 26
ii5R4	ISO	296-102
ii5R5	ISO	297- 34
ii7A12	♦ISO	274- 90
ii7A13	♦ISO	274- 91
ii7A14	ISO	274- 92
ii7A15	ISO	274- 93
ii7A16	ISO	274- 94
ii7A22	♦ISO	274- 95
ii7A23	♦ISO	274- 96
ii7A24	ISO	274- 97
ii7A25	ISO	274- 98
ii7A26	ISO	274- 99
ii7A52	♦ISO	274-100
ii7A53	♦ISO	274-101
ii7A54	ISO	274-102
ii7A55	ISO	274-103
ii7A56	ISO	274-104
ii7B12	♦ISO	274-105
ii7B13	♦ISO	274-106
ii7B14	ISO	274-107
ii7B15	ISO	274-108
ii7B16	ISO	274-109
ii7B22	♦ISO	274-110
ii7B23	♦ISO	275- 1
ii7B24	ISO	275- 2
ii7B25	ISO	275- 3
ii7B26	ISO	275- 4
ii7B52	♦ISO	275- 5
ii7B53	♦ISO	275- 6
ii7B54	ISO	275- 7
ii7B55	ISO	275- 8
ii7B56	ISO	275- 9
ii7C14	ISO	275- 84
ii7C15	ISO	275- 85
ii7C16	ISO	275- 86
ii7C24	ISO	275- 87
ii7C25	ISO	275- 88
ii7C26	ISO	275- 89
ii7C054	ISO	275- 90
ii7C055	ISO	275- 91
ii7C056	ISO	275- 92

TYPE No.	MFRS	Pg&Line
ii7R0	ISO	298- 55
ii7R2	ISO	298- 56
ii7R3	ISO	298- 57
ii7R4	ISO	298- 62
ii7R5	ISO	298- 67
ii10A12	♦ISO	277- 16
ii10A13	♦ISO	277- 17
ii10A14	ISO	277- 18
ii10A15	ISO	277- 19
ii10A16	ISO	277- 20
ii10A22	♦ISO	277- 21
ii10A23	♦ISO	277- 22
ii10A24	ISO	277- 23
ii10A25	ISO	277- 24
ii10A26	ISO	277- 25
ii10A52	♦ISO	277- 26
ii10A53	♦ISO	277- 27
ii10A54	ISO	277- 28
ii10A55	ISO	277- 29
ii10A56	ISO	277- 30
ii10B12	♦ISO	277- 31
ii10B13	♦ISO	277- 32
ii10B14	ISO	277- 33
ii10B15	ISO	277- 34
ii10B16	ISO	277- 35
ii10B22	♦ISO	277- 36
ii10B23	♦ISO	277- 37
ii10B24	ISO	277- 38
ii10B25	ISO	277- 39
ii10B26	ISO	277- 40
ii10B52	♦ISO	277- 41
ii10B53	♦ISO	277- 42
ii10B54	ISO	277- 43
ii10B55	ISO	277- 44
ii10B56	ISO	277- 45
ii10C14	ISO	278- 3
ii10C15	ISO	278- 4
ii10C16	ISO	278- 5
ii10C24	ISO	280- 14
ii10C25	ISO	278- 6
ii10C26	ISO	278- 7
ii10C054	ISO	280- 15
ii10C055	ISO	278- 8
ii10C056	ISO	278- 9
ii10R0	ISO	300- 82
ii10R2	ISO	302- 96
ii10R3	ISO	303- 93
ii10R4	ISO	304- 87
ii10R5	ISO	305- 29
IC53-5,A,B,C	ISO	563-100
IC53-10,A,B,C	ISO	563-101
IC53-20,A,B,C	ISO	563-102
IC53-30,A,B,C	ISO	532-109
IC54-5,A,B,C	ISO	563-106
IC54-10,A,B,C	ISO	563-107
IC54-20,A,B,C	ISO	563-108
IC54-30,A,B,C	ISO	534- 40
IC56-5,A,B,C	ISO	564- 5
IC56-10,A,B,C	ISO	564- 6
IC56-20,A,B,C	ISO	564- 7
IC56-30,A,B,C	ISO	536- 67
IC58-5,A,B,C	ISO	564- 11
IC58-10,A,B,C	ISO	564- 12
IC58-20,A,B,C	ISO	564- 13
IC58-30,A,B,C	ISO	539- 28
IC103-5,A,B,C	ISO	563-103
IC103-10,A,B,C		563-104
	ISO	
IC103-20,A,B,C		563-105
	ISO	
IC103-30,A,B,C		532-110
	ISO	
IC104-5,A,B,C	ISO	563-109
IC104-10,A,B,C		563-110
	ISO	
IC104-20,A,B,C		564- 1
	ISO	
IC104-30,A,B,C		534- 41
	ISO	
IC106-5,A,B,C	ISO	564- 2
IC106-10,A,B,C		564- 8
	ISO	
IC106-20,A,B,C		564- 9
	ISO	
IC106-30,A,B,C		536- 68
	ISO	
IC108-5,A,B,C	ISO	564- 14
IC108-10,A,B,C		564- 15
	ISO	
IC108-20,A,B,C		564- 16
	ISO	
IC108-30,A,B,C		539- 29
	ISO	
IC510-5,A,B,C	ISO	564- 20
IC510-10,A,B,C		564- 21
	ISO	
IC510-20,A,B,C		564- 22
	ISO	
IC510-30,A,B,C		540- 37
	ISO	
IC512-5,A,B,C	ISO	564- 27
IC512-10,A,B,C		564- 28
	ISO	
IC512-20,A,B,C		564- 29
	ISO	
IC512-30,A,B,C		543- 60
	ISO	
IC515-5,A,B,C	ISO	564- 36
IC515-10,A,B,C		564- 37
	ISO	
IC515-20,A,B,C		564- 38
	ISO	
IC515-30,A,B,C		544-104
	ISO	

TYPE No.	MFRS	Pg&Line
IC518-5,A,B,C	ISO	564- 45
IC518-10,A,B,C		564- 46
	ISO	
IC518-20,A,B,C		564- 47
	ISO	
IC518-30,A,B,C		547-104
	ISO	
IC522-5,A,B,C	ISO	564- 58
IC522-10,A,B,C		564- 59
	ISO	
IC522-20,A,B,C		564- 60
	ISO	
IC522-30,A,B,C		549- 65
	ISO	
IC527-5,A,B,C	ISO	564- 67
IC527-10,A,B,C		564- 68
	ISO	
IC527-20,A,B,C		564- 69
	ISO	
IC527-30,A,B,C		552- 40
	ISO	
IC533-5,A,B,C	ISO	564- 79
IC533-10,A,B,C		564- 80
	ISO	
IC533-20,A,B,C		564- 81
	ISO	
IC533-30,A,B,C		553- 56
	ISO	
IC539-5,A,B,C	ISO	564- 87
IC539-10,A,B,C		564- 88
	ISO	
IC539-20,A,B,C		564- 89
	ISO	
IC539-30,A,B,C		556- 2
	ISO	
IC1010-5,A,B,C		564- 23
	ISO	
IC1010-10,A,B,C		564- 24
	ISO	
IC1010-20,A,B,C		564- 25
	ISO	
IC1010-30,A,B,C		540- 38
	ISO	
IC1012-5,A,B,C		564- 30
	ISO	
IC1012-10,A,B,C		564- 31
	ISO	
IC1012-20,A,B,C		564- 32
	ISO	
IC1012-30,A,B,C		543- 61
	ISO	
IC1015-5,A,B,C		564- 39
	ISO	
IC1015-10,A,B,C		564- 40
	ISO	
IC1015-20,A,B,C		564- 41
	ISO	
IC1015-30,A,B,C		544-105
	ISO	
IC1018-5,A,B,C		564- 48
	ISO	
IC1018-10,A,B,C		564- 49
	ISO	
IC1018-20,A,B,C		564- 50
	ISO	
IC1018-30,A,B,C		547-105
	ISO	
IC1022-5,A,B,C		564- 61
	ISO	
IC1022-10,A,B,C		564- 62
	ISO	
IC1022-20,A,B,C		564- 63
	ISO	
IC1022-30,A,B,C		549- 66
	ISO	
IC1027-5,A,B,C		564- 70
	ISO	
IC1027-10,A,B,C		564- 71
	ISO	
IC1027-20,A,B,C		564- 72
	ISO	
IC1027-30,A,B,C		552- 41
	ISO	
IC1033-5,A,B,C		564- 82
	ISO	
IC1033-10,A,B,C		564- 83
	ISO	
IC1033-20,A,B,C		564- 84
	ISO	
IC1033-30,A,B,C		553- 57
	ISO	
IC1039-5,A,B,C		564- 90
	ISO	
IC1039-10,A,B,C		564- 91
	ISO	
IC1039-20,A,B,C		564- 92
	ISO	
IC1039-30,A,B,C		556- 3
	ISO	
ID1-050	IDC	262- 2
ID1-050A	IDC	262- 3
ID1-050B	IDC	262- 4
ID1-050C	IDC	262- 5
ID1-050D	IDC	262- 6
ID1-050E	IDC	262- 7
ID1-050T	IDC	262- 8
ID2-050	IDC	262- 24
ID2-050A	IDC	262- 25
ID2-050B	IDC	262- 26
ID2-050C	IDC	262- 27
ID2-050D	IDC	262- 28
ID2-050E	IDC	262- 29
ID2-050T	IDC	262- 30
ID3-050	IDC	262- 41

TYPE No.	MFRS	Pg&Line
ID3-050A	IDC	262- 42
ID3-050B	IDC	262- 43
ID3-050C	IDC	262- 44
ID3-050D	IDC	262- 45
ID3-050E	IDC	262- 46
ID3-050T	IDC	262- 47
ID5-050	IDC	262- 76
ID5-050A	IDC	262- 77
ID5-050B	IDC	262- 78
ID5-050C	IDC	262- 79
ID5-050D	IDC	262- 80
ID5-050E	IDC	262- 81
ID5-050T	IDC	262- 82
ID6-020	IDC	263- 61
ID6-050	IDC	262-107
ID6-050A	IDC	262-108
ID6-050B	IDC	262-109
ID6-050C	IDC	262-110
ID6-050D	IDC	263- 1
ID6-050E	IDC	263- 2
ID6-050T	IDC	263- 3
ID8-050	IDC	263- 64
ID8-050A	IDC	263- 65
ID8-050B	IDC	263- 66
ID8-050C	IDC	263- 67
ID8-050D	IDC	263- 68
ID8-050T	IDC	263- 69
ID10-050	IDC	264- 2
ID10-050A	IDC	264- 3
ID10-050B	IDC	264- 4
ID10-050C	IDC	264- 5
ID10-050D	IDC	264- 6
ID10-050T	IDC	264- 7
ID12-050	IDC	264- 66
ID12-050A	IDC	264- 67
ID12-050B	IDC	264- 68
ID12-050C	IDC	264- 69
ID12-050D	IDC	264- 70
ID12-050T	IDC	264- 71
ID15-050	IDC	264-100
ID15-050A	IDC	264-101
ID15-050B	IDC	264-102
ID15-050C	IDC	264-103
ID15-050D	IDC	264-104
ID15-050T	IDC	264-105
ID18-050	IDC	265- 32
ID18-050A	IDC	265- 33
ID18-050B	IDC	265- 34
ID18-050C	IDC	265- 35
ID18-050D	IDC	265- 36
ID18-050T	IDC	265- 37
ID20-050	IDC	265- 65
ID20-050A	IDC	265- 66
ID20-050T	IDC	265- 67
ID100	UNI	416- 72
ID101	UNI	422- 13
ID102	UNI	423- 74
ID103	UNI	430- 29
ID104	UNI	432- 64
ID200	♦UNI	418- 27
ID201	♦UNI	424- 29
ID202	♦UNI	430- 60
ID203	♦UNI	433- 30
ID300	♦UNI	442- 82
ID301	♦UNI	449- 42
ID600	♦UNI	416-108
ID601	♦UNI	418- 28
ID602	♦UNI	424- 30
ID603	♦UNI	430- 61
ID604	♦UNI	433- 31
ID605	♦UNI	442- 83
ID606	♦UNI	449- 43
IDA1Z5,A,B,C	IDC	171- 82
IDA1Z6 8,A,B,C		178- 10
	IDC	
IDA1Z8 2,A,B,C		182-103
	IDC	
IDA1Z9.5,A,B,C		187- 48
	IDC	
IDA1Z10,A,B,C	IDC	188-115
IDA1Z14,A,B,C	IDC	196- 86
IDA1Z18,A,B,C	IDC	202-106
IDA1Z22,A,B,C	IDC	207- 32
IDA1Z26,A,B,C	IDC	210- 92
IDA1Z30,A,B,C	IDC	213- 95
IDA1Z34,A,B,C	IDC	216- 39
IDA1Z38,A,B,C	IDC	217-126
IDA1Z42,A,B,C	IDC	219- 37
IDA1Z46,A,B,C	IDC	220-152
IDA1Z52,A,B,C	IDC	223-157
IDA1Z56,A,B,C	IDC	224-110
IDA1Z60,A,B,C	IDC	225-120
IDA1Z64,A,B,C	IDC	226-185
IDA1Z68,A,B,C	IDC	227-117
IDA1Z72,A,B,C	IDC	228-110
IDA1Z76,A,B,C	IDC	229-170
IDA1Z80,A,B,C	IDC	229-187
IDA1Z84,A,B,C	IDC	231- 63
IDA1Z88,A,B,C	IDC	231-107
IDA1Z92,A,B,C	IDC	232-160
IDA1Z96,A,B,C	IDC	232-177
IDA1Z100,A,B,C		233- 93
	IDC	
IDA1Z104,A,B,C		234- 59
	IDC	
IDA1Z108,A,B,C		234-138
	IDC	
IDA1Z112,A,B,C		235-166
	IDC	
IDA1Z116,A,B,C		235-171
	IDC	
IDA1Z120,A,B,C		236- 81
	IDC	

TYPE No.	MFRS	Pg&Line
IDA1Z124,A,B,C		237- 35
	IDC	
IDA1Z128,A,B,C		237- 44
	IDC	
IDA1Z132,A,B,C		238- 53
	IDC	
IDA1Z136,A,B,C		238- 62
	IDC	
IDA1Z140,A,B,C		238-109
	IDC	
IDA1Z144,A,B,C		239- 3
	IDC	
IDA1Z148,A,B,C		239- 12
	IDC	
IDA1Z150,A,B,C		239- 97
	IDC	
IDAZ62,A,B,C	IDC	226- 18
IDAZ66,A,B,C	IDC	227- 2
IDAZ70,A,B,C	IDC	228- 76
IDAZ74,A,B,C	IDC	228-118
IDAZ78,A,B,C	IDC	229-176
IDAZ82,A,B,C	IDC	230- 67
IDAZ86,A,B,C	IDC	231- 69
IDAZ90,A,B,C	IDC	231-116
IDAZ94,A,B,C	IDC	232-166
IDAZ98,A,B,C	IDC	232-183
IDAZ100,A,B,C	IDC	233- 46
IDAZ104,A,B,C	IDC	234- 58
IDAZ108,A,B,C	IDC	234-137
IDAZ112,A,B,C	IDC	235-165
IDAZ116,A,B,C	IDC	235-170
IDAZ120,A,B,C	IDC	236- 42
IDAZ124,A,B,C	IDC	237- 34
IDAZ128,A,B,C	IDC	237- 43
IDAZ132,A,B,C	IDC	238- 52
IDAZ136,A,B,C	IDC	238- 61
IDAZ140,A,B,C	IDC	238- 95
IDAZ144,A,B,C	IDC	239- 2
IDAZ148,A,B,C	IDC	239- 11
IDAZ225,A,B,C	IDC	184- 62
IDAZ226,A,B,C	IDC	189-110
IDAZ227,A,B,C	IDC	194- 8
IDAZ228,A,B,C	IDC	199- 1
IDAZ229,A,B,C	IDC	203-102
IDAZ230,A,B,C	IDC	208- 30
IDAZ231,A,B,C	IDC	212-133
IDAZ232,A,B,C	IDC	216- 48
IDAZ233,A,B,C	IDC	219- 27
IDAZ234,A,B,C	IDC	222- 33
IDAZ235,A,B,C	IDC	225- 86
IDAZ472,A,B,C	IDC	169- 40
IDAZ473,A,B,C	IDC	171- 50
IDAZ474,A,B,C	IDC	173-160
IDAZ475,A,B,C	IDC	178-192
IDAZ824,A,B,C	IDC	174-112
IDAZ3181,A,B,C		181- 44
	IDC	
IDAZ3397,A,B,C		168-134
	IDC	
IDAZ3398,A,B,C		170-133
	IDC	
IDAZ3399,A,B,C		171- 78
	IDC	
IDAZ3400,A,B,C		177-113
	IDC	
IDAZ3401,A,B,C		182- 28
	IDC	
IDAZ3402,A,B,C		188- 28
	IDC	
IDAZ3403,A,B,C		192- 97
	IDC	
IDAZ3404,A,B,C		197-117
	IDC	
IDAZ3405,A,B,C		202- 24
	IDC	
IDAZ3406,A,B,C		206-138
	IDC	
IDAZ3407,A,B,C		211- 21
	IDC	
IDAZ3408,A,B,C		214-177
	IDC	
IDAZ3409,A,B,C		218- 13
	IDC	
IDAZ3410,A,B,C		221- 28
	IDC	
IR106A1	INRB	424- 78
♦INRC	INRI	
	INRJ	
IR106A2	INRB	424- 79
♦INRC	INRI	
	INRJ	
IR106A3	INRB	424- 80
♦INRC	INRI	
	INRJ	
IR106A4	INRB	424- 81
♦INRC	INRI	
	INRJ	
IR106A41	INRB	424- 82
♦INRC	INRI	
	♦INRJ	
IR106B1	INRB	433- 89
♦INRC	INRI	
	INRJ	
IR106B2	INRB	433- 90
♦INRC	INRI	
	INRJ	
IR106B3	INRB	433- 91
♦INRC	INRI	
	INRJ	
IR106B4	INRB	433- 92
♦INRC	INRI	
	INRJ	
IR106B41	INRB	433- 93
♦INRC	INRJ	

Δ-Registered with JEDEC by this manufacturer

♦-Copy of mfr's data sheet may be ordered from D.A.T.A.

1. TYPE No. CROSS INDEX

IN TYPE NUMBER SEQUENCE

TYPE No.	MFRS	Pg&Line
IR106C1	INRB	442-110
♦INRC	INRI	
	INRJ	
IR106C2	INRB	443- 1
♦INRC	INRI	
	INRJ	
IR106C3	INRB	443- 2
♦INRC	INRI	
	INRJ	
IR106C4	INRB	443- 3
♦INRC	INRI	
	INRJ	
IR106C41	INRB	443- 4
♦INRC	INRI	
	INRJ	
IR106D1	INRB	449- 90
♦INRC	INRI	
	INRJ	
IR106D2	INRB	449- 91
♦INRC	INRI	
	INRJ	
IR106D3	INRB	449- 92
♦INRC	INRI	
	INRJ	
IR106D4	INRB	449- 93
♦INRC	INRI	
	INRJ	
IR106D41	INRB	449- 94
♦INRC	INRI	
	INRJ	
IR106F1	INRB	418- 67
♦INRC	INRI	
	INRJ	
IR106F2	INRB	418- 68
♦INRC	INRI	
	INRJ	
IR106F3	INRB	418- 69
♦INRC	INRI	
	INRJ	
IR106F4	INRB	418- 70
♦INRC	INRI	
	INRJ	
IR106F41	INRB	418- 71
♦INRC	INRI	
	INRJ	
IR106Q1	INRB	414- 66
♦INRC	INRI	
	INRJ	
IR106Q2	INRB	414- 67
♦INRC	INRI	
	INRJ	
IR106Q3	INRB	414- 68
♦INRC	INRI	
	INRJ	
IR106Q4	INRB	414- 69
♦INRC	INRI	
	INRJ	
IR106Q41	INRB	414- 70
♦INRC	INRI	
	INRJ	
IR106Y1	INRB	417- 22
♦INRC	INRI	
	INRJ	
IR106Y2	INRB	417- 23
♦INRC	INRI	
	INRJ	
IR106Y3	INRB	417- 24
♦INRC	INRI	
	INRJ	
IR106Y4	INRB	417- 25
♦INRC	INRI	
	INRJ	
IR106Y41	INRB	417- 26
♦INRC	INRI	
	INRJ	
ITT33	♦ITTB	275- 49
ITT44	♦ITTB	270- 95
ITT600	♦ITTB	268- 59
J1	♦DII	301- 27
	PWC	
J2	♦DII	312- 26
	PWC	
J3	PWC	321- 97
J4	♦DII	331- 7
	PWC	
J4A3	EDL	297- 74
J4B3	EDL	305- 95
J4C3	EDL	317- 38
J4D3	EDL	319- 75
J4E3	EDL	325- 78
J4F3	EDL	327- 84
J4G3	EDL	336- 59
J4H3	EDL	344- 7
J4K3	EDL	353- 30
J4M3	EDL	357- 80
J4N3	EDL	365- 42
J05	♦DII	294- 38
	PWC	
J5	PWC	340- 71
J5A3	EDL	297- 75
J5B3	EDL	305- 96
J5C3	EDL	317- 39
J5D3	EDL	319- 76
J5E3	EDL	325- 79
J5F3	EDL	327- 85
J5G3	EDL	336- 60
J5H3	EDL	344- 8
J5K3	EDL	353- 31
J5M3	EDL	357- 81
J5N3	EDL	365- 43
J6	♦DII	348- 34
	PWC	
J7	PWC	355- 81

TYPE No.	MFRS	Pg&Line
J8	♦DII	361- 11
	PWC	
J10	♦DII	371- 46
	PWC	
J12	PWC	378- 38
J100	GICI	299- 57
J200	GICI	310- 18
J400	GICI	328- 85
J600	GICI	346- 29
JZ3 9	PWC	168-167
JZ4.3	PWC	169-166
JZ4.7	PWC	170-173
JZ5.1	PWC	172- 15
JZ5.6,A,B,D	PWC	173- 85
JZ5.6C	PWC	173- 86
JZ6 2,A,B,D	PWC	175- 60
JZ6 2C	PWC	175- 61
JZ6 8,A,B,D	PWC	178- 11
JZ6 8C	PWC	178- 12
JZ7 5,A,B,D	PWC	180- 55
JZ7 5C	PWC	180- 56
JZ8 2,A,B,D	PWC	182-104
JZ8 2C	PWC	182-105
JZ9 1,A,B,D	PWC	186- 36
JZ9 1C	PWC	186- 37
JZ10,A,B,D	PWC	188-116
JZ10C	PWC	188-117
JZ11,A,B,D	PWC	190-109
JZ11C	PWC	190-110
JZ12,A,B,D	PWC	193- 8
JZ12C	PWC	193- 9
JZ13,A,B,D	PWC	195- 46
JZ13C	PWC	195- 47
JZ14,A,B,D	PWC	196- 87
JZ14C	PWC	196- 88
JZ15,A,B,D	PWC	198- 14
JZ15C	PWC	198- 15
JZ16,A,B,D	PWC	199-180
JZ16C	PWC	199-181
JZ17,A,B,D	PWC	201- 35
JZ17C	PWC	201- 36
JZ18,A,B,D	PWC	202-107
JZ18C	PWC	202-108
JZ19,A,B,D	PWC	203-173
JZ19C	PWC	203-174
JZ20,A,B,D	PWC	205- 51
JZ20C	PWC	205- 52
JZ22,A,B,D	PWC	207- 33
JZ22C	PWC	207- 34
JZ24,A,B,D	PWC	209- 17
JZ24C	PWC	209- 18
JZ25,A,B,D	PWC	210- 41
JZ25C	PWC	210- 42
JZ27,A,B,D	PWC	211- 97
JZ27C	PWC	211- 98
JZ30,A,B,D	PWC	213- 96
JZ30C	PWC	213- 97
JZ33,A,B,D	PWC	215- 62
JZ33C	PWC	215- 63
JZ36,A,B,D	PWC	216-166
JZ36C	PWC	216-167
JZ39,A,B,D	PWC	218- 65
JZ39C	PWC	218- 66
JZ43,A,B,D	PWC	219-140
JZ43C	PWC	219-141
JZ45,A,B,D	PWC	220- 93
JZ45C	PWC	220- 94
JZ47,A,B,D	PWC	221- 81
JZ47C	PWC	221- 82
JZ50,A,B,D	PWC	222- 63
JZ50C	PWC	222- 64
JZ51,A,B,D	PWC	223- 29
JZ51C	PWC	223- 30
JZ52,A,B,D	PWC	223-158
JZ52C	PWC	223-159
JZ56,A,B,D	PWC	224-111
JZ56C	PWC	224-112
JZ62,A,B,D	PWC	226- 60
JZ62C	PWC	226- 61
JZ68,A,B,D	PWC	227-118
JZ68C	PWC	227-119
JZ75,A,B,D	PWC	229- 32
JZ75C	PWC	229- 33
JZ82,A,B,D	PWC	230-113
JZ82C	PWC	230-114
JZ91,A,B,D	PWC	232- 49
JZ91C	PWC	232- 50
JZ100,A,B,D	PWC	233- 94
JZ100C	PWC	233- 95
JZ105,A,B,D	PWC	234-101
JZ105C	PWC	234-102
JZ110,A,B,D	PWC	235- 58
JZ110C	PWC	235- 59
JZ120,A,B,D	PWC	236- 82
JZ120C	PWC	236- 83
JZ130,A,B,D	PWC	237-119
JZ130C	PWC	237-120
JZ140,A,B,D	PWC	238-110
JZ140C	PWC	238-111
JZ150,A,B,D	PWC	239- 98
JZ150C	PWC	239- 99
JZ160,A,B,D	PWC	240-121
JZ160C	PWC	240-122
JZ175,A,B,D	PWC	241-120
JZ175C	PWC	241-121
JZ180,A,B,D	PWC	242- 62
JZ180C	PWC	242- 63
JZ200,A,B,D	PWC	243-101
JZ200C	PWC	243-102
JZ220,A,B,D	PWC	244- 39
JZ220C	PWC	244- 40
K1	♦SCO	412- 4
K1A5	EDL	292-104
K1B5	EDL	299- 15

TYPE No.	MFRS	Pg&Line
K1C5	EDL	309- 85
K1D5	EDL	320- 46
K1E5	EDL	328- 39
K1F5	EDL	339- 8
K1G5	EDL	345-104
K1H5	EDL	355- 12
K1K5	EDL	359- 19
K1M5	EDL	369- 68
K1N5	EDL	377- 66
K2A5	EDL	293- 12
K2B5	EDL	299- 40
K2C5	EDL	309-110
K2D5	EDL	320- 67
K2E5	EDL	328- 68
K2F5	EDL	339- 30
K2G5	EDL	346- 19
K2H5	EDL	355- 17
K2K5	EDL	359- 32
K2M5	EDL	369- 88
K2N5	EDL	377- 75
K3A5	EDL	293- 50
K3A	KEM	510- 8
K3B5	EDL	299-101
K3C5	EDL	310- 70
K3D5	EDL	321- 1
K3E5	EDL	329- 38
K3F5	EDL	339- 83
K3F	KEM	510- 9
K3G5	EDL	346- 76
K3H5	EDL	355- 38
K3K5	EDL	359- 85
K3M5	EDL	370- 27
K3N5	EDL	377- 93
K4A5	EDL	293- 90
K4B5	EDL	300- 56
K4C5	EDL	311- 39
K4D5	EDL	321- 61
K4E5	EDL	330- 19
K4F5	EDL	340- 31
K4G5	EDL	347- 46
K4H5	EDL	355- 57
K4K5	EDL	360- 31
K4M5	EDL	370- 74
K4N5	EDL	378- 6
K5A5	EDL	294- 22
K5B5	EDL	301- 1
K5C5	EDL	311-100
K5D5	EDL	321- 98
K5E5	EDL	330- 82
K5F5	EDL	340- 72
K5G5	EDL	348- 1
K5H5	EDL	355- 82
K5K5	EDL	360- 91
K5M5	EDL	371- 17
K5N5	EDL	378- 39
K6A5	EDL	294- 67
K6B5	EDL	301- 61
K6C5	EDL	312- 62
K6D5	EDL	322- 27
K6E5	EDL	331- 43
K6F5	EDL	340-107
K6G5	EDL	348- 67
K6H5	EDL	355-103
K6K5	EDL	361- 38
K6M5	EDL	371- 73
K6N5	EDL	378- 57
K7A5	EDL	294- 96
K7B5	EDL	301-105
K7C5	EDL	312-106
K7D5	EDL	322- 62
K7E5	EDL	331- 92
K7F5	EDL	341- 30
K7G5	EDL	349- 6
K7H5	EDL	356- 11
K7K5	EDL	361- 82
K7M5	EDL	372- 1
K7N5	EDL	378- 80
K8A5	EDL	295- 29
K8B5	EDL	302- 55
K8C5	EDL	313- 61
K8D5	EDL	322-110
K8E5	EDL	332- 47
K8F5	EDL	341- 73
K8G5	EDL	349- 67
K8H5	EDL	356- 33
K8K5	EDL	362- 18
K8M5	EDL	372- 42
K8N5	EDL	378- 92
K20	KEM	600- 31
K25A	KEM	510- 22
K25B	KEM	510- 23
K46HZ	SOIF	336- 42
K66HZ	SOIF	353- 14
K86HZ	SOIF	365- 28
K408	KEM	517- 56
K408A	KEM	517- 57
K408B	KEM	517- 58
K540	SOIF	297- 49
K1040Δ	SOIF	305- 51
K1140	SOIF	374- 60
K1240	SOIF	379- 84
K1440	SOIF	382- 68
K2040	SOIF	316- 96
K3040	SOIF	325- 32
K4040	SOIF	335-106
K5040	SOIF	343- 79
K6040	SOIF	352- 92
K8040	SOIF	364-101
KHP3	EDI	394- 78
KHP4	EDI	397- 58
KHP5	EDI	400- 15
KHP6	EDI	401- 64
KHP7	EDI	402- 69
KHP8	EDI	404- 15

TYPE No.	MFRS	Pg&Line
KHP9	EDI	404-100
KHP10	EDI	406- 56
KHP15	EDI	408- 86
KHP20	EDI	410- 46
KHP25	EDI	411- 53
KHP30	EDI	412- 50
KHP35	EDI	412- 63
KHP40	EDI	412- 94
KHP45	EDI	413- 2
KHP50	EDI	413- 16
KL5	♦SCO	398-106
KL10	♦SCO	405- 38
KL15	♦SCO	408- 17
KL20	♦SCO	409-102
KL25	♦SCO	411- 10
KL30	♦SCO	412- 11
KL35	♦SCO	412- 52
KL40	♦SCO	412- 75
KL45	♦SCO	412- 99
KL50	♦SCO	413- 3
KLR5	♦SCO	398- 95
KLR10	♦SCO	405- 30
KLR15	♦SCO	408- 7
KLR20	♦SCO	409- 93
KLR25	♦SCO	411- 3
KR50	♦FERB	198-129
KR51	♦FERB	203- 21
KR52	♦FERB	207-144
KR53	♦FERB	212- 15
KR54	♦FERB	215-175
KR55	♦FERB	218-137
KR56	♦FERB	221-160
KR57	♦FERB	225- 17
KR58	♦FERB	228- 13
KR59	♦FERB	231- 3
KR60	♦FERB	234- 5
KR602AA	ITT	296- 22
KR602BA	ITT	303- 88
KR602CA	ITT	308- 10
KR602DA	ITT	314-108
KR602EA	ITT	319- 39
KR602FA	ITT	324- 11
KR602HA	ITT	333-107
KR602KA	ITT	342- 72
KR602MA	ITT	351- 13
KR602PA	ITT	356-107
KR602RA	ITT	363- 60
KR602VA	ITT	373- 47
KR866	GIC	405-108
	SOIF	
KR867	GIC	377- 49
KS030A	♦FERB	166-110
KS033A	♦FERB	167- 5
KS033B	♦FERB	167- 6
KS036A	♦FERB	167-156
KS039A	♦FERB	168-108
KS039B	♦FERB	168-109
KS043A	♦FERB	169-108
KS047A	♦FERB	170-106
KS047B	♦FERB	170-107
KS051A	♦FERB	171-153
KS056A	♦FERB	172-194
KS056B	♦FERB	172-195
KS062A	♦FERB	174-185
KS068A	♦FERB	177- 62
KS068B	♦FERB	177- 63
KS075A	♦FERB	179-114
KS77	♦FERB	184- 98
KS77B	♦FERB	184- 99
KS78	♦FERB	184-100
KS78B	♦FERB	184-101
KS082A	♦FERB	181-170
KS082B	♦FERB	181-171
KS091A	♦FERB	185- 94
KS100A	♦FERB	187-167
KS100B	♦FERB	187-168
KS110A	♦FERB	189-199
KS120A	♦FERB	192- 46
KS120B	♦FERB	192- 47
KS130A	♦FERB	194-125
KS150A	♦FERB	197- 74
KS150B	♦FERB	197- 75
KS160A	♦FERB	199- 75
KS180A	♦FERB	201-158
KS180B	♦FERB	201-159
KS560	SOIF	297- 66
KS602CA	ITT	308- 11
KS602EA	ITT	319- 40
KS602GA	ITT	327- 52
KS602PA	ITT	356-108
KS602RA	ITT	363- 61
KS602VA	ITT	373- 48
KS1060	SOIF	305- 82
KS1160	SOIF	374- 83
KS1260	SOIF	379-106
KS1460	SOIF	382- 81
KS2030A	♦FERB	166- 86
KS2033A	♦FERB	166-162
KS2033B	♦FERB	166-163
KS2036A	♦FERB	167-119
KS2036B	♦FERB	167-120
KS2039A	♦FERB	168- 72
KS2039B	♦FERB	168- 73
KS2043A	♦FERB	169- 67
KS2043B	♦FERB	169- 68
KS2047A	♦FERB	170- 58
KS2047B	♦FERB	170- 59
KS2051A	♦FERB	171-103
KS2051B	♦FERB	171-104
KS2056A	♦FERB	172-121
KS2056B	♦FERB	172-122
KS2060	SOIF	317- 22
KS2062A	♦FERB	174-113
KS2062B	♦FERB	174-114

TYPE No.	MFRS	Pg&Line
KS2068A	♦FERB	177- 3
KS2068B	♦FERB	177- 4
KS2075A	♦FERB	179- 53
KS2075B	♦FERB	179- 54
KS2082A	♦FERB	181-109
KS2082B	♦FERB	181-110
KS2091A	♦FERB	185- 34
KS2091B	♦FERB	185- 35
KS2100A	♦FERB	187-102
KS2100B	♦FERB	187-103
KS2110A	♦FERB	189-147
KS2110B	♦FERB	189-148
KS2120A	♦FERB	191-188
KS2120B	♦FERB	191-189
KS2130A	♦FERB	194- 76
KS2130B	♦FERB	194- 77
KS2150A	♦FERB	197- 21
KS2150B	♦FERB	197- 22
KS2160A	♦FERB	199- 28
KS3060	SOIF	325- 65
KS4060	SOIF	336- 43
KS5060	SOIF	343-103
KS6060	SOIF	353- 15
KS8060	SOIF	365- 29
KSD101-1,-2	GESY	266- 43
KV1	FCAJ	581- 94
KV2	FCAJ	581- 95
KV3	FCAJ	581- 96
KV4	FCAJ	581- 97
KV05	EDI	399-107
KV5	FCAJ	581- 98
KV08	EDI	404- 8
KV010	EDI	406- 38
KV012	EDI	407- 51
KV107,A,B,C,D	KSC	535- 89
KV112,A,B,C,D	KSC	540- 39
KV113,A,B,C,D	KSC	549- 67
KV114,A,B,C,D	KSC	556-103
KV115,A,B,C,D	KSC	540- 40
KV116,A,B,C,D	KSC	549- 68
KV117,A,B,C,D	KSC	556-104
KV122,A,B,C,D	KSC	556-105
KV123,A,B,C,D	KSC	544-106
KV124,A,B,C,D	KSC	544-107
KV125,A,B,C,D	KSC	544-108
KV126,A,B,C,D	KSC	544-109
KV127	KSC	553- 58
KV128	KSC	553- 59
KV129	KSC	553- 60
KV130	KSC	553- 61
KV132	KSC	540- 41
KV133	KSC	549- 69
KV134	KSC	556-106
KV135	KSC	540- 42
KV136	KSC	549- 70
KV137	KSC	556-107
KV138	KSC	535- 90
KV139	KSC	535- 91
KV140	KSC	535- 92
KV141	KSC	535- 93
KV150	KSC	535- 94
KV151	KSC	540- 43
KV152	KSC	544-110
KV153	KSC	549- 71
KV154	KSC	553- 62
KV155	KSC	556-108
KV156	KSC	535- 95
KV157	KSC	540- 44
KV158	KSC	545- 1
KV159	KSC	549- 72
KV160	KSC	553- 63
KV161	KSC	557- 1
KV162	KSC	535- 96
KV163	KSC	540- 45
KV165	KSC	545- 2
KV166	KSC	549- 73
KV167	KSC	553- 64
KV168	KSC	560- 24
KV169	KSC	560- 25
KV170	KSC	560- 26
KV171	KSC	560- 27
KV172	KSC	560- 28
KV173	KSC	560- 29
KV200	KSC	560- 30
KV201	KSC	560- 31
KV202	KSC	557- 2
KV203	KSC	557- 3
KV204	KSC	553- 65
KV205	KSC	553- 66
KV206	KSC	549- 74
KV207	KSC	549- 75
KV208	KSC	545- 3
KV209	KSC	545- 4
KV210	KSC	540- 46
KV211	KSC	540- 47
KV212	KSC	535- 97
KV213	KSC	535- 98
KV300	KSC	560- 32
KV301	KSC	560- 33
KV302	KSC	557- 4
KV303	KSC	557- 5
KV304	KSC	553- 67
KV305	KSC	553- 68
KV306	KSC	549- 76
KV307	KSC	549- 77
KV308	KSC	545- 5
KV309	KSC	545- 6
KV310	KSC	540- 48
KV311	KSC	540- 49
KV312	KSC	535- 99
KV313	KSC	535-100
KV2001	♦KEV	548- 54
KV2002	♦KEV	548- 55
KV2003	♦KEV	548- 56

Δ-Registered with JEDEC by this manufacturer

♦-Copy of mfr's data sheet may be ordered from D.A.T.A.

1. TYPE No. CROSS INDEX

IN TYPE NUMBER SEQUENCE

TYPE No.	MFRS	Pg&Line
KV2101	♦KEV	542- 72
KV2102	♦KEV	542- 73
KV2103	♦KEV	542- 74
KV5139	KSC	536- 69
KV5140	KSC	540- 50
KV5141	KSC	543- 62
KV5142	KSC	545- 7
KV5143	KSC	547-106
KVF5	♦EDI	399- 92
KVF7 5	♦EDI	403- 9
KVF10	♦EDI	406- 21
KVF12 5	♦EDI	407- 43
KVF15	♦EDI	408- 65
KVF20	♦EDI	410- 34
KVF25	♦EDI	411- 40
KVP5	EDI	400- 1
KVP6	EDI	401- 59
KVP7	EDI	402- 65
KVP8	EDI	404- 9
KVP9	EDI	404- 98
KVP10	EDI	406- 39
KVP15	EDI	408- 72
KVP20	EDI	410- 39
KVP25	EDI	411- 45
KVP30	EDI	412- 42
KVP35	EDI	412- 60
KVP40	EDI	412- 90
KVP45	EDI	412-109
KVP50	EDI	413- 13
KVR8 6	LTTF	184- 9
KVR8 6A	LTTF	184- 10
KVR10	LTTF	187- 81
L1/1H	ITTE	251- 49
L1/2H	ITTE	255- 28
L1/3H	ITTE	257- 66
L1/4H	ITTE	258- 40
L1/5H	ITTE	259- 11
L1/6H	ITTE	259- 81
L1/8H	ITTE	259-108
L1/10H	ITTE	260- 26
L1/15H	ITTE	260- 58
L1/20H	ITTE	260- 91
L1V	GESY	498- 41
L3/1H	ITTE	251- 56
L3/2H	ITTE	255- 34
L3/3H	ITTE	257- 72
L3/4H	ITTE	258- 46
L3/5H	ITTE	259- 16
L3/6H	ITTE	259- 82
L3/8H	ITTE	259-109
L3/10H	ITTE	260- 27
L3/15H	ITTE	260- 59
L3/20H	ITTE	260- 92
L6/1H	ITTE	251- 66
L6/2H	ITTE	255- 40
L6/3H	ITTE	257- 78
L6/4H	ITTE	258- 52
L6/5H	ITTE	259- 21
L6/6H	ITTE	259- 83
L6/8H	ITTE	259-110
L6/10H	ITTE	260- 28
L6/15H	ITTE	260- 60
L6/20H	ITTE	260- 93
L8/1H	ITTE	251- 73
L8/2H	ITTE	255- 46
L8/3H	ITTE	257- 84
L8/4H	ITTE	258- 58
L8/5H	ITTE	259- 26
L8/6H	ITTE	259- 84
L8/8H	ITTE	260- 1
L8/10H	ITTE	260- 29
L8/15H	ITTE	260- 66
L8/20H	ITTE	260- 94
L8A	GESY	498- 57
L8B	GESY	498- 71
L8F	GESY	498- 43
L8G	GESY	498- 64
L8U	GESY	498- 28
L9A	GESY	498- 58
L9B	GESY	498- 72
L9F	GESY	498- 44
L9G	GESY	498- 65
L9U	GESY	498- 29
L811A	GESY	498- 59
L811B	GESY	498- 73
L811F	GESY	498- 45
L811G	GESY	498- 66
L811U	GESY	498- 30
L911A	GESY	498- 60
L911B	GESY	498- 74
L911F	GESY	498- 46
L911G	GESY	498- 67
L911U	GESY	498- 31
L4120	♦PHIL	584- 59
L4122	♦PHIL	584- 60
L4130	♦PHIL	584- 61
L4131	♦PHIL	584- 62
L4132	♦PHIL	584- 63
L4134	♦PHIL	584- 64
L4135	♦PHIL	584- 65
L4136	♦PHIL	584- 66
L4138	♦PHIL	584- 67
L4139	♦PHIL	584- 68
L4140	♦PHIL	584- 69
L4141	♦PHIL	584- 70
L4142	♦PHIL	584- 71
L4143	♦PHIL	584- 72
L4144	♦PHIL	584- 73
L4145	♦PHIL	584- 74
L4146	♦PHIL	584- 75
L4147	♦PHIL	584- 76
L4153	PHIL	514- 99
L4154	PHIL	514-100
L4154A	PHIL	514-101
L4154AM	PHIL	514-102
L4154B	PHIL	514-103
L4154BM	PHIL	514-104
L4155	PHIL	513- 64
L4155A	PHIL	514-105
L4155AM	PHIL	514-106
L4155B	PHIL	514-107
L4155BM	PHIL	514-108
L4156	PHIL	513- 65
L4156A	PHIL	514-109
L4156AM	PHIL	514-110
L4156B	PHIL	515- 1
L4156BM	PHIL	515- 2
L4157	PHIL	513- 66
L4157A	PHIL	515- 3
L4157AM	PHIL	515- 4
L4157B	PHIL	515- 5
L4157BM	PHIL	515- 6
L4164	PHIL	513- 67
L4164A	PHIL	513- 68
L4164AM	PHIL	513- 69
L4164B	PHIL	513- 70
L4164BM	PHIL	513- 71
L4165	PHIL	513- 72
L4165A	PHIL	515- 7
L4165AM	PHIL	515- 8
L4165B	PHIL	515- 9
L4165BM	PHIL	515- 10
L4166	PHIL	513- 73
L4166A	PHIL	515- 11
L4166AM	PHIL	515- 12
L4166B	PHIL	515- 13
L4166BM	PHIL	515- 14
L4167	PHIL	513- 74
L4167A	PHIL	515- 15
L4167AM	PHIL	515- 16
L4167B	PHIL	515- 17
L4167BM	PHIL	515- 18
L4170	PHIL	517-101
L4171	PHIL	517-102
L4172	PHIL	517-103
L4173	PHIL	517-104
L4174	PHIL	517-105
L4175	PHIL	517-106
L4190	♦PHIL	516- 74
L4190A	♦PHIL	516- 75
L4190B	♦PHIL	516- 76
L4190C	♦PHIL	516- 77
L4412	PHIL	575- 84
L4413	PHIL	575- 85
L4414	PHIL	575- 86
L4501	PHIL	575- 87
L4502	PHIL	575- 88
L4503	PHIL	575- 89
L4504	PHIL	575- 90
L4505	PHIL	575- 91
L4506	PHIL	575- 92
L4507	PHIL	575- 93
L4509	PHIL	575- 94
L4510	PHIL	575- 95
L4520	PHIL	575- 96
L4530	PHIL	575- 97
L4540	PHIL	575- 98
L4702	PHIL	584- 77
L4703	PHIL	584- 78
L4704	PHIL	584- 79
L4705	PHIL	584- 80
L4706	PHIL	584- 81
L4707	PHIL	584- 82
L4708	PHIL	584- 83
L4709	PHIL	584- 84
L4710	PHIL	584- 85
L4711	PHIL	584- 86
L4712	PHIL	584- 87
L4713	PHIL	584- 88
L4714	PHIL	584- 89
L4715	PHIL	584- 90
L4716	PHIL	584- 91
L4717	PHIL	584- 92
L4718	PHIL	584- 93
L4719	PHIL	584- 94
L4720	PHIL	584- 95
L4721	PHIL	584- 96
L4722	PHIL	584- 97
L4750	PHIL	584- 98
L4751	PHIL	584- 99
L4752	PHIL	584-100
L4753	PHIL	584-101
L4754	PHIL	584-102
L4755	PHIL	584-103
L4756	PHIL	584-104
L4757	PHIL	584-105
L4758	PHIL	584-106
L4759	PHIL	584-107
L4765	PHIL	584-108
L4766	PHIL	584-109
L4767	PHIL	584-110
L4768	PHIL	585- 1
L4769	PHIL	585- 2
L4770	PHIL	585- 3
L4771	PHIL	585- 4
L4772	PHIL	585- 5
L4773	PHIL	585- 6
L4774	PHIL	585- 7
L4775	PHIL	585- 8
L4776	PHIL	585- 9
L4970	PHIL	564- 3
L4971	PHIL	564- 18
L4972	PHIL	564- 34
L4973	PHIL	564- 43
L4974	PHIL	564- 56
L4975	PHIL	564- 65
L4976	PHIL	564- 74
L4977	PHIL	564- 85
L4978	PHIL	564- 94
L4980	PHIL	564- 4
L4981	PHIL	564- 19
L4982	PHIL	564- 35
L4983	PHIL	564- 44
L4984	PHIL	564- 57
L4985	PHIL	564- 66
L4986	PHIL	564- 75
L4987	PHIL	564- 86
L4988	PHIL	564- 95
L8200	♦PHIL	511- 20
L8200A	♦PHIL	511- 21
L8200B	♦PHIL	511- 22
L8200C	♦PHIL	511- 23
L8201	♦PHIL	511- 24
L8201A	♦PHIL	511- 25
L8201B	♦PHIL	511- 26
L8201C	♦PHIL	511- 27
L8202	♦PHIL	510- 5
L8202A	♦PHIL	510- 6
L8202B	♦PHIL	510- 7
L8202C	♦PHIL	513- 75
L8202D	♦PHIL	513- 76
L8202E	♦PHIL	513- 77
L8203	♦PHIL	511- 28
L8203A	♦PHIL	511- 29
L8203B	♦PHIL	511- 30
L8203C	♦PHIL	511- 31
L8204	♦PHIL	511- 32
L8204A	♦PHIL	511- 33
L8204B	♦PHIL	511- 34
L8204C	♦PHIL	511- 35
L8205	♦PHIL	512- 17
L8205A	♦PHIL	512- 18
L8205B	♦PHIL	512- 19
L8206	♦PHIL	513- 78
L8206A	♦PHIL	513- 79
L8206B	♦PHIL	513- 80
L8206C	♦PHIL	513- 81
L8206D	♦PHIL	513- 82
L8206E	♦PHIL	513- 83
L8207	♦PHIL	513- 84
L8207A	♦PHIL	513- 85
L8207B	♦PHIL	513- 86
L8207C	♦PHIL	513- 87
L8207D	♦PHIL	513- 88
L8207E	♦PHIL	513- 89
L8208	♦PHIL	513- 90
L8208A	♦PHIL	513- 91
L8208B	♦PHIL	513- 92
L8208C	♦PHIL	513- 93
L8209	PHIL	515- 97
L8209A	PHIL	515- 98
L8209AM	PHIL	515- 99
L8209B	PHIL	515-100
L8209BM	PHIL	515-101
L8209C	PHIL	515-102
L8209CM	PHIL	515-103
L8209M	PHIL	515-104
L8210	PHIL	515-105
L8210A	PHIL	515-106
L8210AM	PHIL	515-107
L8210B	PHIL	515-108
L8210BM	PHIL	515-109
L8210C	PHIL	516- 1
L8210CM	PHIL	516- 2
L8210M	PHIL	516- 3
L8211	PHIL	513- 94
L8211A	PHIL	513- 95
L8211AM	PHIL	513- 96
L8211B	PHIL	513- 97
L8211BM	PHIL	513- 98
L8211C	PHIL	513- 99
L8211CM	PHIL	513-100
L8211D	PHIL	513-101
L8211DM	PHIL	513-102
L8211E	PHIL	513-103
L8211EM	PHIL	513-104
L8211M	PHIL	513-105
L8212	PHIL	511- 36
L8212A	PHIL	511- 37
L8212AM	PHIL	511- 38
L8212B	PHIL	511- 39
L8212BM	PHIL	511- 40
L8212C	PHIL	511- 41
L8212CM	PHIL	511- 42
L8212M	PHIL	511- 43
L8213	PHIL	515- 19
L8213A	PHIL	515- 20
L8213AM	PHIL	515- 21
L8213B	PHIL	515- 22
L8213BM	PHIL	515- 23
L8213M	PHIL	515- 24
L8214	PHIL	515- 25
L8214A	PHIL	515- 26
L8214AM	PHIL	515- 27
L8214B	PHIL	515- 28
L8214BM	PHIL	515- 29
L8214M	PHIL	515- 30
L8215	PHIL	515- 31
L8215A	PHIL	515- 32
L8215AM	PHIL	515- 33
L8215B	PHIL	515- 34
L8215BM	PHIL	515- 35
L8215M	PHIL	515- 36
L8216	PHIL	600- 32
L8216A	PHIL	600- 33
L8216B	PHIL	600- 34
L8350	PHIL	585- 10
L8351	PHIL	585- 11
L8352	PHIL	585- 12
L8353	PHIL	585- 13
L8354	PHIL	585- 14
L8355	PHIL	585- 15
L8356	PHIL	585- 16
L8360	PHIL	585- 17
L8370	PHIL	585- 18
L8380	PHIL	585- 19
L8503	♦PHIL	527- 47
L8504	♦PHIL	530-109
L8505	♦PHIL	534- 9
L8512	♦PHIL	524- 62
L8513	♦PHIL	523- 2
L8551	♦PHIL	520- 20
L8552	♦PHIL	523- 59
L8553	♦PHIL	526- 27
L8554	♦PHIL	528-102
L8555	♦PHIL	531- 88
L8563	♦PHIL	526- 28
L8564	♦PHIL	528-103
L8565	♦PHIL	531- 89
L8566	♦PHIL	534- 60
L8567	♦PHIL	538- 77
L8700	♦PHIL	585- 20
L8700A	♦PHIL	585- 21
L8701	♦PHIL	585- 22
L8701A	♦PHIL	585- 23
L8702	♦PHIL	585- 24
L8702A	♦PHIL	585- 25
L8703	♦PHIL	585- 26
L8703A	♦PHIL	585- 27
L8704	♦PHIL	585- 28
L8704A	♦PHIL	585- 29
L8850	PHIL	594-110
L8851	♦PHIL	595- 1
L8852	♦PHIL	595- 2
L8853	♦PHIL	595- 3
L8860	PHIL	595- 4
L8861	PHIL	595- 5
L8862	PHIL	595- 6
L8870	PHIL	595- 7
L8871	PHIL	595- 8
L8872	PHIL	595- 9
L8910	PHIL	558- 92
L8913	PHIL	562- 80
L8914	PHIL	563- 1
L8915	PHIL	563- 39
LA60	INRJ	400- 95
LA200	SCN	307- 37
LA300	SCN	318- 85
LA400	SCN	320- 11
LA500	SCN	327- 41
LA600	SCN	338- 30
LA700	SCN	245- 45
LA800	SCN	345- 51
LA900	SCN	355- 55
LA1000	SCN	245- 58
LAA200	SCN	307- 38
LAA300	SCN	318- 86
LAA400	SCN	320- 13
LAA500	SCN	327- 44
LAA600	SCN	338- 31
LAA700	SCN	245- 46
LAA800	SCN	345- 53
LAA900	SCN	245- 53
LAA1000	SCN	355- 83
LAB200	SCN	307- 40
LAB300	SCN	318- 87
LAB400	SCN	320- 15
LAB500	SCN	327- 46
LAB600	SCN	338- 32
LAB700	SCN	245- 47
LAB800	SCN	345- 55
LAB900	SCN	245- 54
LAB1000	SCN	356- 34
LAC200	SCN	307- 41
LAC300	SCN	318- 88
LAC400	SCN	320- 16
LAC500	SCN	327- 47
LAC600	SCN	338- 33
LAC700	SCN	245- 48
LAC800	SCN	345- 56
LAC900	SCN	245- 55
LAC1000	SCN	356- 57
LAC2001	TRW	169- 69
LAC2002	TRW	170- 60
LAC2003	TRW	171-105
LAC2004	TRW	172-123
LAC2005	TRW	174-115
LAC2006	TRW	177- 5
LAC2007	TRW	179- 55
LAC2008	TRW	181-111
LAC2009	TRW	185- 36
LAC2010	TRW	187-104
LASCS	GESY	498- 42
LB120	INRJ	407- 13
LC180	INRJ	409- 47
LCD12	♦EDI	406- 99
LCD15	♦EDI	408- 13
LCD20	♦EDI	409- 98
LCD25	♦EDI	411- 7
LCD30	♦EDI	412- 8
LCD35	♦EDI	412- 51
LCD40	♦EDI	412- 74
LCD45	♦EDI	412- 97
LDD5	♦APX	273- 36
LDD10	♦APX	273- 37
LDD15	♦APX	273- 38
LDD50	♦APX	273- 39
LDR05	♦RADF	577- 91
LDR07	♦RADF	577- 92
LDZ70/4A3	♦APX	169- 82
LDZ70/4A7	♦APX	170- 74
LDZ70/5A1	♦APX	171-121
LDZ70/5A6	♦APX	172-161
LDZ70/6A2	♦APX	174-138
LDZ70/6A8	♦APX	177- 20
LDZ70/7A5	♦APX	179- 73
LDZ70/8A2	♦APX	181-126
LDZ70/9A1	♦APX	185- 53
LEDV3	♦VAC	575- 99
LFD8	♦EDI	403- 28
LFD10	♦EDI	405- 34
LID6.8,A	♦USS	178-160
LID7.5,A	♦USS	181- 7
LID8.2,A	♦USS	183- 75
LID9.1,A	♦USS	186-179
LID10,A	♦USS	189-102
LID11,A	♦USS	191- 67
LID12,A	♦USS	193-195
LID13,A	♦USS	195-199
LID15,A	♦USS	198-198
LID16,A	♦USS	200-141
LID18,A	♦USS	203- 90
LID20,A	♦USS	206- 14
LID22,A	♦USS	208- 12
LID24,A	♦USS	209-169
LID27,A	♦USS	212- 80
LID30,A	♦USS	214- 72
LID33,A	♦USS	216- 33
LMZ3.3,A,-20	USS	167- 78
LMZ3 6,A,-20	USS	168- 38
LMZ3.9,A,-20	USS	169- 1
LMZ4 3,A,-20	USS	169-192
LMZ4 7,A,-20	USS	171- 8
LMZ5.1,A,-20	USS	172- 43
LMZ5 6,A,-20	USS	173-122
LMZ6 2,A,-20	USS	175- 99
LMZ6.8,A,-20	USS	178- 70
LMZ7 5,A,-20	USS	180-112
LMZ8.2,A,-20	USS	182-165
LMZ9.1,A,-20	USS	186- 95
LMZ10,A,-20	USS	188-184
LMZ11,A,-20	USS	190-171
LMZ12,A,-20	USS	193- 77
LMZ13,A,-20	USS	195-106
LMZ14A	USS	196-107
LMZ15,A,-20	USS	198- 79
LMZ16,A,-20	USS	200- 54
LMZ18,A,-20	USS	202-169
LMZ20,A,-20	USS	205-109
LMZ22,A,-20	USS	207- 94
LMZ24,A,-20	USS	209- 72
LMZ27,A,-20	USS	211-160
LMZ30,A,-20	USS	213-155
LMZ33,A,-20	USS	215-124
LMZ36,A,-20	USS	217- 20
LMZ39,A,-20	USS	218-101
LMZ43,A,-20	USS	219-178
LMZ47,A,-20	USS	221-123
LMZ51,A,-20	USS	223- 66
LMZ56,A,-20	USS	224-153
LMZ62,A,-20	USS	226- 97
LMZ68,A,-20	USS	227-158
LMZ75,A,-20	USS	229- 71
LMZ82,A,-20	USS	230-149
LMZ91,A,-20	USS	232- 83
LMZ100,A,-20	USS	233-132
LMZ110,A,-20	USS	235- 91
LMZ120,A,-20	USS	236-118
LMZ130,A,-20	USS	237-150
LMZ150,A,-20	USS	239-132
LMZ160,A,-20	USS	240-150
LMZ180,A,-20	USS	242- 95
LMZ200,A,-20	USS	243-131
LP1H	AEIL	251- 45
LP1S,U	ROSG	575-100
LP2H	AEIL	254- 22
LP2S,U	ROSG	575-101
LP3H	AEIL	256- 36
LP4H	AEIL	257- 39
LP100	♦GIC	267- 28
LPA1H	AEIL	298- 71
LPA2H	AEIL	307- 24
LPA3H	AEIL	307- 58
LPM3 3,A,-20	USS	167- 58
LPM3.6,A,-20	USS	168- 18
LPM3.9,A,-20	USS	168-168
LPM4 3,A,-20	USS	169-167
LPM4 7,A,-20	USS	170-174
LPM5 1,A,-20	USS	172- 16
LPM5.6,A,-20	USS	173- 87
LPM6.2,A,-20	USS	175- 62
LPM6 8,A,-20	USS	178- 13
LPM7.5,A,-20	USS	180- 57
LPM8.2,A,-20	USS	182-106
LPM9 1,A,-20	USS	186- 38
LPM10,A,-20	USS	188-118
LPM11,A,-20	USS	190-111
LPM12,A,-20	USS	193- 10
LPM13,A,-20	USS	195- 48
LPM15,A,-20	USS	198- 16
LPM16,A,-20	USS	199-182
LPM18,A,-20	USS	202-109
LPM20,A,-20	USS	205- 53
LPM22,A,-20	USS	207- 35
LPM24,A,-20	USS	209- 19
LPM27,A,-20	USS	211- 99
LPM30,A,-20	USS	213- 98
LPM33,A,-20	USS	215- 64
LPM36,A,-20	USS	216-168
LPM39,A,-20	USS	218- 67
LPM43,A,-20	USS	219-142
LPM47,A,-20	USS	221- 83
LPM51,A,-20	USS	223- 31
LPM56,A,-20	USS	224-113
LPM62,A,-20	USS	226- 62
LPM68,A,-20	USS	227-120
LPM75,A,-20	USS	229- 34
LPM82,A,-20	USS	230-115
LPM91,A,-20	USS	232- 51
LPM100,A,-20	USS	233- 96

Δ-Registered with JEDEC by this manufacturer

♦-Copy of mfr's data sheet may be ordered from D.A.T.A.

1. TYPE No. CROSS INDEX

IN TYPE NUMBER SEQUENCE

TYPE No.	MFRS	Pg&Line	TYPE No.	MFRS	Pg&Line	TYPE No.	MFRS	Pg&Line	TYPE No.	MFRS	Pg&Line	TYPE No.	MFRS	Pg&Line
LPM110,A,-20	USS	235- 60	LVA495	♦TRW	187- 42	M3Z24,A	♦USS	209- 84	M13Z	SOIF	194-128	MA242C	MATJ	298- 91
LPM120,A,-20	USS	236- 84	LVA498	♦TRW	187- 56	M3Z27,A	♦USS	211-174	M14	SOIF	299- 38	MA251	MATJ	304- 88
LPM130,A,-20	USS	237-121	LVA3100A	TRW	188- 41	M3Z30,A	♦USS	213-169	M15HZ	SOIF	384- 18	MA252	MATJ	316- 13
LPM150,A,-20	USS	239-100	LVA3100B	TRW	188- 42	M3Z33,A	♦USS	215-139	M15K	SOIF	384- 32	MA253	MATJ	324- 97
LPM160,A,-20	USS	240-123	LZ4 7	LTTF	170- 45	M3Z36,A	♦USS	217- 34	M15Z	SOIF	197- 78	MA261	MATJ	305- 66
LPM180,A,-20	USS	242- 64	LZ5 6	LTTF	172-102	M3Z39,A	♦USS	218-113	M16Z	SOIF	199- 78	MA262	MATJ	317- 4
LPM200,A,-20	USS	243-103	LZ6 8	LTTF	176-197	M3Z43,A	♦USS	220- 6	M18Z	SOIF	201-162	MA263	MATJ	325- 50
LPZT8.2	USS	182-107	LZ8 2	LTTF	181- 85	M3Z47,A	♦USS	221-135	M20H	SOIF	389- 44	MA320	♦MATJ	542- 75
LPZT10	USS	188-119	LZ10	LTTF	187- 75	M3Z51,A	♦USS	223- 77	M20HZ	SOIF	389- 64	MA330	♦MATJ	544- 11
LPZT12	USS	193- 11	M1	ITTE	251- 50	M3Z56,A	♦USS	224-164	M20K	SOIF	389- 80	MA332A	MATJ	547- 27
LPZT15	USS	198- 17	M1A1	EDL	294- 85	M3Z62,A	♦USS	226-108	M20Z	SOIF	204-131	MA332B	MATJ	549- 16
LPZT18	USS	202-110	M1A5	EDL	294- 86	M3Z68,A	♦USS	227-170	M22	SOIF	309- 83	MA332C	MATJ	553- 21
LPZT22	USS	207- 36	M1A9	EDL	294- 87	M3Z75,A	♦USS	229- 82	M22Z	SOIF	206-100	MA350	MATJ	248- 59
LPZT27	USS	211-100	M1B1	EDL	301- 87	M3Z82,A	♦USS	230-160	M24Z	SOIF	208- 96	MA351	MATJ	249- 91
LPZT33	USS	215- 65	M1B5	EDL	301- 88	M3Z91,A	♦USS	232- 93	M25HZ	SOIF	392- 30	MA408A	MIC	517- 59
LR33H	AEIL	167- 7	M1B9	EDL	301- 89	M3Z100,A	♦USS	233-143	M27Z	SOIF	210-155	MA412	MIC	600- 47
LR36H	AEIL	167-157	M1C1	EDL	312- 84	M3Z110,A	♦USS	235- 99	M30G	SOIF	393- 94	MA414	MIC	513-106
LR39CH	AEIL	168-110	M1C5	EDL	312- 85	M3Z120,A	♦USS	236-130	M30HZ	SOIF	394- 2	MA418	MIC	517- 60
LR43CH	AEIL	169-109	M1C9	EDL	312- 86	M3Z130,A	♦USS	237-160	M30K	SOIF	394- 20	MA418A	MIC	517- 61
LR47CH	AEIL	170-108	M1D1	EDL	322- 46	M3Z150,A	♦USS	239-143	M30Z	SOIF	213- 2	MA418B	MIC	517- 62
LR51CH	AEIL	171-154	M1D5	EDL	322- 47	M3Z160,A	♦USS	240-158	M33Z	SOIF	214-144	MA419	MIC	512- 13
LR56CH	AEIL	172-196	M1D9	EDL	322- 48	M3Z180,A	♦USS	242-104	M40K	SOIF	397- 4	MA419A	MIC	512- 14
LR62CH	AEIL	174-186	M1E1	EDL	331- 71	M3Z200,A	♦USS	243-142	M42	SOIF	328- 36	MA421A	MIC	511- 44
LR68CH	AEIL	177- 64	M1E5	EDL	331- 72	M4A1	EDL	295- 61	M50K	SOIF	399- 65	MA421B	MIC	511- 45
LR75CH	AEIL	179-115	M1E9	EDL	331- 73	M4A5	EDL	295- 62	M60H	SOIF	400- 84	MA423A	MIC	513-107
LR82CH	AEIL	181-172	M1F1	EDL	341- 15	M4A9	EDL	295- 63	M60K	SOIF	401- 22	MA425	MIC	517-107
LR91CH	AEIL	185- 95	M1F5	EDL	341- 16	M4B1	EDL	302- 97	M62	SOIF	345-101	MA428	MIC	600- 48
LR100CH	AEIL	187-169	M1F9	EDL	341- 17	M4B5	EDL	302- 98	M67	SOD	293- 82	MA432	MATJ	263-106
LR110CH	AEIL	189-200	M1G1	EDL	348- 95	M4B9	EDL	302- 99	M67A	SOD	292- 86	MA433	MATJ	575- 16
LR120CH	AEIL	192- 48	M1G5	EDL	348- 96	M4C1	EDL	313-107	M67B	SOD	292-110	MA435	MIC	600- 49
LR130CH	AEIL	194-126	M1G9	EDL	348- 97	M4C5	EDL	313-108	M67C	SOD	293- 31	MA439	MIC	592- 48
LR150CH	AEIL	197- 76	M1H1	EDL	356- 5	M4C9	EDL	313-109	M68	SOD	300- 36	MA441	MIC	518- 51
LR160CH	AEIL	199- 76	M1H5	EDL	356- 6	M4D1	EDL	323- 33	M68A	SOD	298-105	MA443	MIC	516- 4
LR180CH	AEIL	201-160	M1H9	EDL	356- 7	M4D5	EDL	323- 34	M68B	SOD	299- 24	MA443A	MIC	516- 5
LR200CH	AEIL	204-129	M1K1	EDL	361- 62	M4D9	EDL	323- 35	M68C	SOD	299- 68	MA443B	MIC	516- 6
LR703	♦SES	356- 65	M1K5	EDL	361- 63	M4E1	EDL	332- 98	M69	SOD	311- 12	MA444	MIC	516- 7
LR903	♦SES	367- 41	M1K9	EDL	361- 64	M4E5	EDL	332- 99	M69A	SOD	309- 69	MA444A	MIC	516- 8
LS221	TIIB	575-102	M1M1	EDL	371- 89	M4E9	EDL	332-100	M69B	SOD	309- 95	MA444B	MIC	516- 9
LS222	TIIB	575-103	M1M5	EDL	371- 90	M4F1	EDL	341-103	M69C	SOD	310- 31	MA444C	MIC	516- 10
LS400	♦TII	575-104	M1M9	EDL	371- 91	M4F5	EDL	341-104	M70	SOD	329- 98	MA444D	MIC	516- 11
	TIIB		M2A1	EDL	295- 13	M4F9	EDL	341-105	M70A	SOD	328- 23	MA445	MIC	516- 12
LS600	♦TII	575-105	M2A5	EDL	295- 14	M4G1	EDL	350- 5	M70B	SOD	328- 51	MA445A	MIC	516- 13
	TIIB		M2A9	EDL	295- 15	M4G5	EDL	350- 6	M70C	SOD	328- 98	MA445B	MIC	516- 14
LSX900	♦TII	575-106	M2B1	EDL	302- 35	M4G9	EDL	350- 7	M71	SOD	347- 19	MA449B	MIC	511- 46
LVA43A	TRW	169-139	M2B5	EDL	302- 36	M4H1	EDL	356- 58	M71A	SOD	345- 87	MA449C	MIC	511- 47
LVA43B	TRW	169-140	M2B9	EDL	302- 37	M4H5	EDL	356- 59	M71B	SOD	346- 1	MA449D	MIC	511- 48
LVA47A	TRW	170-142	M2C1	EDL	313- 38	M4H9	EDL	356- 60	M71C	SOD	346- 43	MA449E	MIC	511- 49
LVA47B	TRW	170-143	M2C5	EDL	313- 39	M4HZ	SOIF	328- 65	M72	SOD	360- 15	MA449F	MIC	511- 50
LVA51A	TRW	171-185	M2C9	EDL	313- 40	M4K1	EDL	362- 68	M72A	SOD	359- 5	MA450A	MIC	531- 21
LVA51B	TRW	171-186	M2D1	EDL	322- 96	M4K5	EDL	362- 69	M72B	SOD	359- 21	MA450B	MIC	529- 48
LVA56A	TRW	173- 52	M2D5	EDL	322- 97	M4K9	EDL	362- 70	M72C	SOD	359- 53	MA450C	MIC	528- 22
LVA56B	TRW	173- 53	M2D9	EDL	322- 98	M4L3052	♦MOTA	496- 19	M72D	SOD	359- 67	MA450D	MIC	527- 26
LVA62A	TRW	175- 28	M2E1	EDL	332- 26	M4L3053	♦MOTA	496- 22	M73	SOD	370- 59	MA450E,F,G,H	MIC	525- 87
LVA62B	TRW	175- 29	M2E5	EDL	332- 27	M4L3054	♦MOTA	496- 23	M73A	SOD	369- 48	MA451A	MIC	513-108
LVA68A	TRW	177-124	M2E9	EDL	332- 28	M4M1	EDL	372- 79	M73B	SOD	369- 76	MA451B	MIC	513-109
LVA68B	TRW	177-125	M2F1	EDL	341- 57	M4M5	EDL	372- 80	M73C	SOD	369-107	MA451C	MIC	513-110
LVA75A	TRW	179-172	M2F5	EDL	341- 58	M4M9	EDL	372- 81	M80K	SOIF	403- 83	MA451D	MIC	514- 1
LVA75B	TRW	179-173	M2F9	EDL	341- 59	M4Z3.3,A,-20	USS	167- 8	M82	SOIF	359- 18	MA451E	MIC	514- 2
LVA82A	TRW	182- 39	M2G1	EDL	349- 47	M4Z3.6,A,-20	USS	167-158	M102	SOIF	369- 65	MA451F	MIC	514- 3
LVA82B	TRW	182- 40	M2G5	EDL	349- 48	M4Z3 9,A,-20	USS	168-111	M120K	SOIF	407- 36	MA452	MIC	517- 63
LVA91A	TRW	185-151	M2G9	EDL	349- 49	M4Z4.3,A,-20	USS	169-110	M150K	SOIF	408- 54	MA452A	MIC	517- 64
LVA91B	TRW	185-152	M2H1	EDL	356- 28	M4Z4.7,A,-20	USS	170-109	M200K	SOIF	410- 24	MA458B	MIC	514- 4
LVA100A	TRW	188- 39	M2H5	EDL	356- 29	M4Z5 1,A,-20	USS	171-155	M300K	SOIF	412- 33	MA458C	MIC	514- 5
LVA100B	TRW	188- 40	M2H9	EDL	356- 30	M4Z5.6,A,-20	USS	172-199	M405	SOIF	396- 63	MA458D	MIC	514- 6
LVA150	♦TRW	171- 74	M2K1	EDL	362- 2	M4Z6.2,A,-20	USS	174-189	M500	SOD	340- 16	MA458E	MIC	514- 7
LVA153	♦TRW	172- 67	M2K5	EDL	362- 3	M4Z6.8,A,-20	USS	177- 67	M500A	SOD	338-104	MA458F	MIC	514- 8
LVA156	♦TRW	172-197	M2K9	EDL	362- 4	M4Z7.5,A,-20	USS	179-116	M500B	SOD	339- 15	MA459B	MIC	511- 51
LVA159	♦TRW	173-182	M2M1	EDL	372- 27	M4Z8 2,A,-20	USS	181-173	M500C	SOD	339- 50	MA459C	MIC	511- 52
LVA162	♦TRW	174-187	M2M5	EDL	372- 28	M4Z9 1,A,-20	USS	185- 96	M505	SOIF	399- 17	MA459D	MIC	511- 53
LVA165	♦TRW	176-137	M2M9	EDL	372- 29	M4Z10,A,-20	USS	187-170	M605	SOIF	400- 85	MA459F	MIC	511- 54
LVA168	♦TRW	177- 65	M3	ITTE	251- 57	M4Z11,A,-20	USS	189-201	M1200	SOD	378- 3	MA460A	MIC	531- 22
LVA171	♦TRW	179- 9	M3A1	EDL	295- 37	M4Z12,A,-20	USS	192- 49	M8320	TOSJ	398- 89	MA460B	MIC	529- 49
LVA174	♦TRW	179- 22	M3A5	EDL	295- 38	M4Z13,A,-20	USS	194-127	M8810A25	TOSJ	600- 35	MA460C	MIC	528- 23
LVA177	♦TRW	181- 41	M3A9	EDL	295- 39	M4Z15,A,-20	USS	197- 77	M8810A50	TOSJ	600- 36	MA460D	MIC	527- 27
LVA180	♦TRW	181- 58	M3B1	EDL	302- 69	M4Z16,A,-20	USS	199- 77	M8810A100	TOSJ	600- 37	MA460E,F,G,H	MIC	525- 88
LVA183	♦TRW	183- 80	M3B5	EDL	302- 70	M4Z18,A,-20	USS	201-161	M8810B100	TOSJ	600- 38	MA461	MIC	517- 65
LVA186	♦TRW	184- 13	M3B9	EDL	302- 71	M4Z20,A,-20	USS	204-130	M8811A25	TOSJ	600- 39	MA461A	MIC	517- 66
LVA189	♦TRW	184- 86	M3C1	EDL	313- 75	M4Z22,A,-20	USS	206- 99	M8811A50	TOSJ	600- 40	MA461B	MIC	517- 67
LVA192	♦TRW	186-182	M3C5	EDL	313- 76	M4Z24,A,-20	USS	208- 42	M8811A100	TOSJ	600- 41	MA490	MIC	516- 15
LVA195	♦TRW	187- 41	M3C9	EDL	313- 77	M4Z27,A,-20	USS	210-154	M8811B100	TOSJ	600- 42	MA490A	MIC	516- 16
LVA198	♦TRW	187- 55	M3D1	EDL	323- 9	M4Z30,A,-20	USS	213- 1	M8813A25	TOSJ	600- 43	MA490B	MIC	516- 17
LVA343A	TRW	169-141	M3D5	EDL	323- 10	M4Z33,A,-20	USS	214-143	M8813A50	TOSJ	600- 44	MA491	MIC	516- 18
LVA343B	TRW	169-142	M3D9	EDL	323- 11	M4Z36,A,-20	USS	216- 90	M9213-100	TOSJ	500- 37	MA491A	MIC	515- 37
LVA347A	TRW	170-144	M3E1	EDL	332- 60	M4Z39,A,-20	USS	217-163	M9213-200	TOSJ	496- 6	MA491B	MIC	515- 38
LVA347B	TRW	170-145	M3E5	EDL	332- 61	M4Z43,A,-20	USS	219- 68	M9213-450	TOSJ	496- 10	MA492C	MIC	514- 9
LVA351A	TRW	171-187	M3E9	EDL	332- 62	M4Z47,A,-20	USS	220-190	M9216	♦DETM	304- 57	MA492D	MIC	514- 10
LVA351B	TRW	171-188	M3F1	EDL	341- 79	M4Z51,A,-20	USS	222-142	M9220	♦DETM	304- 92	MA492E	MIC	514- 11
LVA356A	TRW	173- 54	M3F5	EDL	341- 80	M4Z56,A,-20	USS	224- 34	M9257A	♦DETM	311-101	MA494B	MIC	516- 39
LVA356B	TRW	173- 55	M3F9	EDL	341- 81	M4Z62,A,-20	USS	225-173	M9257B	♦DETM	330- 83	MA1701	♦GESY	253- 61
LVA362A	TRW	175- 30	M3G1	EDL	349- 79	M4Z68,A,-20	USS	227- 43	M9257C	♦DETM	348- 2	MA1702	♦GESY	252- 23
LVA362B	TRW	175- 31	M3G5	EDL	349- 80	M4Z75,A,-20	USS	228-143	M9257D	♦DETM	360- 92	MA1703	♦GESY	248-103
LVA368A	TRW	177-126	M3G9	EDL	349- 81	M4Z82,A,-20	USS	230- 38	MA5	EDI	295- 52	MA1704	♦GESY	247- 47
LVA368B	TRW	177-127	M3H1	EDL	356- 37	M4Z91,A,-20	USS	231-161	MA10	EDI	302- 84	MA4011B	MIC	585- 30
LVA375A	TRW	179-174	M3H5	EDL	356- 38	M4Z100,A,-20	USS	233- 17	MA20	EDI	313- 93	MA4011C	MIC	585- 31
LVA375B	TRW	179-175	M3H9	EDL	356- 39	M4Z110,A,-20	USS	234-153	MA26	MATJ	600- 45	MA4011D	MIC	585- 32
LVA382A	TRW	182- 41	M3K1	EDL	362- 29	M4Z120,A,-20	USS	236- 15	MA30	EDI	323- 23	MA4019B	MIC	535-101
LVA382B	TRW	182- 42	M3K5	EDL	362- 30	M4Z130,A,-20	USS	237- 58	MA40	EDI	332- 86	MA4019C	MIC	540- 51
LVA391A	TRW	185-153	M3K9	EDL	362- 31	M4Z150,A,-20	USS	239- 29	MA50	EDI	341- 98	MA4019D	MIC	545- 8
LVA391B	TRW	185-154	M3M1	EDL	372- 53	M4Z160,A,-20	USS	240- 63	MA53	♦MATJ	247- 30	MA4019E	MIC	549- 78
LVA450	♦TRW	171- 75	M3M5	EDL	372- 54	M4Z180,A,-20	USS	241-160	MA60	EDI	349-101	MA4019F	MIC	553- 69
LVA453	♦TRW	172- 68	M3M9	EDL	372- 55	M4Z200,A,-20	USS	243- 40		♦MATJ	600- 46	MA4019G	MIC	557- 6
LVA456	♦TRW	172-198	M3Z6 8,A	♦USS	178- 80	M5 6Z	SOIF	172-200	MA80	EDI	362- 55	MA4034	MIC	527- 80
LVA459	♦TRW	173-183	M3Z7 5,A	♦USS	180-123	M6HZ	SOIF	346- 16	MA100	EDI	372- 68	MA4035	MIC	527- 6
LVA462	♦TRW	174-188	M3Z8 2,A	♦USS	182-176	M6.2Z	SOIF	174-190	MA101	MATJ	298- 39	MA4036	MIC	524- 71
LVA465	♦TRW	176-138	M3Z9 1,A	♦USS	186-106	M6.8Z	SOIF	177- 68	MA102	MATJ	307- 36	MA4037	MIC	524- 11
LVA468	♦TRW	177- 66	M3Z10,A	♦USS	189- 2	M7.5Z	SOIF	179-117	MA103	MATJ	314- 84	MA4038	MIC	524- 12
LVA471	♦TRW	179- 10	M3Z11,A	♦USS	190-184	M8HZ	SOIF	359- 31	MA203	MATJ	327- 22	MA4039	MIC	523- 37
LVA474	♦TRW	179- 23	M3Z12,A	♦USS	193- 91	M8.2Z	SOIF	181-174	MA215	MATJ	328- 78	MA4060A	MIC	559- 78
LVA477	♦TRW	181- 42	M3Z13,A	♦USS	195-117	M9Z	SOIF	185- 97	MA218	MATJ	360- 64	MA4060AA	MIC	562- 55
LVA480	♦TRW	181- 59	M3Z15,A	♦USS	198- 92	M10HZ	SOIF	369- 47	MA231	MATJ	304- 1	MA4060B	MIC	552-106
LVA483	♦TRW	183- 81	M3Z16,A	♦USS	200- 64	M10Z	SOIF	187-171	MA232	MATJ	315- 22	MA4060C	MIC	544- 46
LVA486	♦TRW	184- 14	M3Z18,A	♦USS	202-184	M11Z	SOIF	190- 1	MA233	MATJ	324- 27	MA4060D	MIC	538- 64
LVA489	♦TRW	184- 87	M3Z20,A	♦USS	205-122	M12Δ	SOIF	299- 13	MA240	MATJ	315- 23	MA4061A	MIC	559- 79
LVA492	♦TRW	186-183	M3Z22,A	♦USS	207-107	M12Z	SOIF	192- 50	MA242	MATJ	298- 90	MA4061AA	MIC	562- 56

Δ-Registered with JEDEC by this manufacturer

♦-Copy of mfr's data sheet may be ordered from D.A.T.A.

1. TYPE No. CROSS INDEX

IN TYPE NUMBER SEQUENCE

TYPE No.	MFRS	Pg&Line
MA4061B	MIC	552-107
MA4061C	MIC	544- 47
MA4061D	MIC	538- 65
MA4062A	MIC	559- 80
MA4062B	MIC	552-108
MA4062C	MIC	544- 48
MA4062D	MIC	538- 66
MA4063	MIC	551- 81
MA4064	MIC	551- 82
MA4065	MIC	534- 10
MA4071B	MIC	264- 8
MA4072B	MIC	266- 18
MA4083	MIC	528- 89
MA4084	MIC	528- 90
MA4085	MIC	525- 89
MA4086	MIC	523- 3
MA4098AA	MIC	562- 57
MA4099D	MIC	538- 67
MA4101	MIC	514- 12
MA4121	MIC	262- 71
MA4123	MIC	517- 18
MA4123A	MIC	517- 19
MA4123B	MIC	517- 20
MA4124	MIC	516- 19
MA4124A	MIC	516- 20
MA4125	MIC	514- 13
MA4125A	MIC	514- 14
MA4126	MIC	511- 55
MA4126A	MIC	511- 56
MA4127	MIC	511- 57
MA4127A	MIC	511- 58
MA4128	MIC	517- 68
MA4129	MIC	517- 69
MA4130	MIC	514- 15
MA4130A	MIC	514- 16
MA4131	MIC	511- 59
MA4131A	MIC	511- 60
MA4133	MIC	514- 17
MA4135	MIC	518- 37
MA4136	MIC	511- 61
MA4136A	MIC	511- 62
MA4137	MIC	511- 63
MA4140	MIC	575- 17
MA4142	MIC	517- 21
MA4142A	MIC	517- 22
MA4146	MIC	600- 50
MA4147	MIC	518- 31
MA4148	MIC	600- 51
MA4171	MIC	511- 64
MA4172	MIC	511- 65
MA4173	MIC	514- 18
MA4174	MIC	514- 19
MA4230	MIC	269- 22
MA4245	MIC	270- 15
MA4251	MIC	532- 91
MA4253	MIC	530- 72
MA4254	MIC	530- 73
MA4255	MIC	527- 16
MA4256	MIC	530- 52
MA4257	MIC	532- 93
MA4259	MIC	532- 19
MA4260	MIC	534- 11
MA4261	MIC	535- 36
MA4263	MIC	600- 52
MA4264	MIC	600- 53
MA4265	MIC	600- 54
MA4266	MIC	600- 55
MA4267	MIC	600- 56
MA4268	MIC	600- 57
MA4273B	MIC	536- 21
MA4273C	MIC	540- 52
MA4273D	MIC	545- 9
MA4273E	MIC	549- 79
MA4273F	MIC	553- 70
MA4273G	MIC	557- 7
MA4280	MIC	523- 4
MA4281	MIC	525- 90
MA4282	MIC	528- 91
MA4283	MIC	530- 37
MA4284	MIC	531-100
MA4285	MIC	533- 83
MA4286	MIC	535- 45
MA4287	MIC	539- 53
MA4288	MIC	544- 6
MA4289	MIC	547- 35
MA4290	MIC	551- 54
MA4291	MIC	552- 95
MA4292	MIC	553- 24
MA4296	MIC	530- 74
MA4297	MIC	530- 75
MA4298	MIC	530- 76
MA4303	MIC	270- 96
MA4304	MIC	270- 97
MA4305	MIC	270- 98
MA4306	MIC	270- 99
MA4307	MIC	275- 50
MA4308	MIC	275- 51
MA4337F	MIC	534- 30
MA4341AA,1,2	MIC	523- 5
MA4341B,1,2	MIC	528- 92
MA4341C,1,2	MIC	531- 72
MA4341D1	MIC	534- 12
MA4341D2	MIC	534- 13
MA4341D	MIC	534- 14
MA4341E1	MIC	539- 69
MA4341E	MIC	539- 70
MA4341F1	MIC	548- 27
MA4352G1	MIC	555- 89
MA4358F	MIC	534- 31
MA4361	MIC	528- 93
MA4362	MIC	524- 79
MA4372C	MIC	264- 9
MA4373C	MIC	266- 19
MA4374C	MIC	269-104

TYPE No.	MFRS	Pg&Line
MA4375C	MIC	276- 72
MA4375E	MIC	276- 73
MA4380	MIC	523- 6
MA4381	MIC	525- 91
MA4382	MIC	528- 94
MA4383	MIC	530- 38
MA4384	MIC	531-101
MA4385	MIC	533- 84
MA4386	MIC	535- 46
MA4387	MIC	539- 54
MA4388	MIC	544- 7
MA4400	MIC	514- 20
MA4400A	MIC	514- 21
MA4534	MIC	528- 27
MA4535	MIC	527- 7
MA4536	MIC	525-102
MA4537	MIC	524- 80
MA4538	MIC	524- 81
MA4539	MIC	523- 38
MA4540	MIC	528- 28
MA4541	MIC	527- 8
MA4542	MIC	525-103
MA4544	MIC	585- 33
MA4546	MIC	527- 9
MA4547	MIC	528- 29
MA4551	MIC	528- 30
MA4552	MIC	530- 77
MA4553	MIC	530- 78
MA4554	MIC	530- 79
MA4555	MIC	530- 80
MA4556	MIC	531- 93
MA4557	MIC	533- 60
MA4562	MIC	532- 92
MA4604A1	MIC	568- 36
MA4604A	MIC	568- 57
MA4604B	MIC	568- 66
MA4604C	MIC	568- 73
MA4605A	MIC	569- 28
MA4605B	MIC	569- 37
MA4605C	MIC	569- 50
MA4606A1	MIC	570- 78
MA4606A2	MIC	570- 77
MA4606A	MIC	570- 79
MA4606B	MIC	570- 80
MA4606C	MIC	570- 81
MA4607A1	MIC	571- 67
MA4607A2	MIC	571- 66
MA4607A	MIC	571- 75
MA4607B	MIC	571- 81
MA4607C	MIC	571-100
MA4608A	MIC	572- 97
MA4608B	MIC	572- 99
MA4608C	MIC	572-101
MA4609A	MIC	573- 37
MA4609B	MIC	573- 38
MA4609C	MIC	573- 39
MA4610	MIC	581- 45
MA4610A	MIC	581- 46
MA4613	MIC	517- 23
MA4614	MIC	517-108
MA4615	MIC	518- 29
MA4616	MIC	517- 24
MA4617	MIC	517-109
MA4618	MIC	518- 30
MA4619	MIC	581- 47
MA4619A	MIC	581- 48
MA4623	MIC	512- 20
MA4623A	MIC	512- 21
MA4624	MIC	581- 49
MA4624A	MIC	581- 50
MA4625	MIC	581- 51
MA4625A	MIC	581- 52
MA4631A,1,2	MIC	527- 28
MA4633A,1,2	MIC	527- 29
MA4644A-E	MIC	520- 40
MA4645B-E	MIC	523-103
MA4646C-E	MIC	527- 48
MA4651A	MIC	571- 9
MA4651B	MIC	571- 11
MA4651C	MIC	571- 31
MA4652A	MIC	571- 77
MA4652B	MIC	571- 90
MA4652C	MIC	572- 2
MA4653A	MIC	572- 41
MA4653B	MIC	572- 44
MA4653C	MIC	572- 69
MA4654A1	MIC	572-108
MA4654A	MIC	573- 3
MA4654B	MIC	573- 6
MA4654C	MIC	573- 21
MA4655	MIC	572- 39
MA4684	MIC	531- 55
MA4685	MIC	535- 27
MA4686	MIC	523- 88
MA4687	MIC	521- 77
MA4688	MIC	519- 65
MA4690	MIC	600- 58
MA4691	MIC	600- 59
MA4692	MIC	600- 60
MA4748	MIC	600- 61
MA4749	MIC	600- 62
MA4750	MIC	600- 63
MA4751	MIC	600- 64
MA4752	MIC	600- 65
MA4753	MIC	600- 66
MA4754	MIC	600- 67
MA4755	MIC	600- 68
MA4756	MIC	600- 69
MA4760A	MIC	559- 81
MA4760AA	MIC	562- 58
MA4760B	MIC	553- 1
MA4760C	MIC	544- 49
MA4760D	MIC	538- 68
MA4761A	MIC	559- 82

TYPE No.	MFRS	Pg&Line
MA4761AA	MIC	562- 59
MA4761B	MIC	553- 2
MA4761C	MIC	544- 50
MA4761D	MIC	538- 69
MA4762	MIC	551- 55
MA4763	MIC	551- 56
MA4764	MIC	529- 50
MA4765	MIC	527- 49
MA4850	MIC	593- 26
MA4851	MIC	593- 27
MA4852	MIC	593- 28
MA4853	MIC	593- 29
MA4854	MIC	593- 30
MA4855	MIC	593- 31
MA4856	MIC	593- 32
MA4857	MIC	593- 33
MA4861C	♦MIC	516- 21
MA4861D	♦MIC	516- 22
MA4861E	♦MIC	516- 23
MA4861F	♦MIC	516- 24
MA4861G	♦MIC	516- 25
MA4861H	♦MIC	516- 26
MA4878	MIC	593- 34
MA4882	MIC	593- 35
MA4883	MIC	593- 36
MA4953B	♦MIC	539- 71
MA4953C	♦MIC	539- 72
MA4954B	♦MIC	534-110
MA4954C	♦MIC	535- 1
MA4955C	♦MIC	532- 44
MA4955E	♦MIC	532- 45
MA4956C	♦MIC	530- 53
MA4956E	♦MIC	530- 54
MA4956F	♦MIC	530- 55
MA4957E	♦MIC	527- 66
MA4957F	♦MIC	527- 67
MA4958E	♦MIC	524- 63
MA4958F	♦MIC	524- 64
MA4961A,B	MIC	548-102
MA4962B,C	MIC	544- 8
MA4963B,C	MIC	538- 54
MA4964B,C	MIC	534- 93
MA4965C,D,E	MIC	533- 85
MA4966C,E,F	MIC	531-102
MA4967E,F	MIC	525- 92
MA4968E,F	MIC	523- 7
MA4969E,F	MIC	523- 60
MA4980	♦MIC	595- 10
MA4984	♦MIC	595- 11
MA4985	♦MIC	595- 12
MA4986	♦MIC	595- 13
MA4987	♦MIC	595- 14
MA4988	♦MIC	595- 15
MA4989	♦MIC	595- 16
MA4992	♦MIC	595- 17
MA4998	♦MIC	595- 18
MA40001	♦MIC	510- 54
MA40002	♦MIC	510- 55
MA40003	♦MIC	510- 56
MA40006	♦MIC	512- 23
MA40007	♦MIC	512- 24
MA40008	♦MIC	512- 25
MA40009	♦MIC	512- 26
MA40012	♦MIC	516- 27
MA40013	♦MIC	516- 28
MA40014	♦MIC	516- 29
MA40015	♦MIC	516- 30
MA40024	♦MIC	517- 13
MA40025	♦MIC	517- 14
MA40026	♦MIC	518- 21
MA40027	♦MIC	518- 22
MA40028	♦MIC	518- 38
MA40029	♦MIC	518- 39
MA40051D	♦MIC	511- 66
MA40051E	♦MIC	511- 67
MA40051F	♦MIC	511- 68
MA40051G	♦MIC	511- 69
MA40071D	♦MIC	514- 22
MA40071E	♦MIC	514- 23
MA40071F	♦MIC	514- 24
MA40071G	♦MIC	514- 25
MA40071H	♦MIC	514- 26
MA41500	♦MIC	511- 70
MA41501	♦MIC	511- 71
MA41502	♦MIC	511- 72
MA41503	♦MIC	511- 73
MA41504	♦MIC	511- 74
MA41505	♦MIC	514- 27
MA41506	♦MIC	514- 28
MA41507	♦MIC	514- 29
MA41508	♦MIC	514- 30
MA41509	♦MIC	514- 31
MA41510	♦MIC	517- 25
MA41511	♦MIC	517- 26
MA41512	♦MIC	517- 27
MA41513	♦MIC	518- 1
MA41514	♦MIC	518- 2
MA41515	♦MIC	518- 3
MA41516	♦MIC	262- 53
MA43000	♦MIC	534- 15
MA43001	♦MIC	536- 20
MA43003	♦MIC	533- 28
MA43004	♦MIC	527- 33
MA43005	♦MIC	528-105
MA43007	♦MIC	528-106
MA45016	♦MIC	547-107
MA45017	♦MIC	549- 80
MA45018	♦MIC	552- 42
MA45019	♦MIC	553- 71
MA45020	♦MIC	556- 4
MA45021	♦MIC	557- 8
MA45033	♦MIC	536- 70
MA45034	♦MIC	539- 30
MA45035	♦MIC	540- 53

TYPE No.	MFRS	Pg&Line
MA45036	♦MIC	543- 63
MA45037	♦MIC	545- 10
MA45038	♦MIC	547-108
MA45039	♦MIC	549- 81
MA45040	♦MIC	552- 43
MA45041	♦MIC	553- 72
MA45042	♦MIC	556- 5
MA45043	♦MIC	557- 9
MA45044	♦MIC	559- 30
MA45045	♦MIC	560- 34
MA45046	♦MIC	561- 34
MA45047	♦MIC	562- 1
MA47000	♦MIC	585- 34
MA47001	♦MIC	585- 35
MA47002	♦MIC	585- 36
MA47003	♦MIC	585- 37
MA47004	♦MIC	585- 38
MA47005	♦MIC	585- 39
MA47006	♦MIC	585- 40
MA47007	♦MIC	585- 41
MA47008	♦MIC	585- 42
MA47009	♦MIC	585- 43
MA47010	♦MIC	585- 44
MA47011	♦MIC	585- 45
MA47012	♦MIC	585- 46
MA47013	♦MIC	585- 47
MA47014	♦MIC	585- 48
MA47015	♦MIC	585- 49
MA47016	♦MIC	585- 50
MA47017	♦MIC	585- 51
MA47018	♦MIC	585- 52
MA47019	♦MIC	585- 53
MA47020	♦MIC	585- 54
MA47021	♦MIC	585- 55
MA47022	♦MIC	585- 56
MA47023	♦MIC	585- 57
MA47024	♦MIC	585- 58
MA47025	♦MIC	585- 59
MA47026	♦MIC	585- 60
MA47027	♦MIC	585- 61
MA47028	♦MIC	585- 62
MA47029	♦MIC	585- 63
MA47030	♦MIC	585- 64
MA47031	♦MIC	585- 65
MA47032	♦MIC	585- 66
MA47033	♦MIC	585- 67
MA47034	♦MIC	585- 68
MA47035	♦MIC	585- 69
MA47036	♦MIC	585- 70
MA47037	♦MIC	585- 71
MA47038	♦MIC	585- 72
MA47039	♦MIC	585- 73
MA47040	♦MIC	585- 74
MA47041	♦MIC	585- 75
MA47042	♦MIC	585- 76
MA47043	♦MIC	585- 77
MA47044	♦MIC	585- 78
MA47045	♦MIC	585- 79
MA47046	♦MIC	585- 80
MA47047	♦MIC	585- 81
MA47051	MIC	585- 82
MA47052	MIC	585- 83
MA47054	MIC	585- 84
MA47075	♦MIC	585- 85
MA47076	♦MIC	585- 86
MA47077	♦MIC	585- 87
MA47078	♦MIC	585- 88
MA47079	♦MIC	585- 89
MA47080	♦MIC	585- 90
MA47081	♦MIC	585- 91
MA47082	MIC	585- 92
MA47083	♦MIC	600- 70
MA47084	♦MIC	585- 93
MA47085	MIC	585- 94
MA47086	MIC	585- 95
MA49010	♦MIC	595- 19
MA49012	MIC	595- 20
MA49020	♦MIC	595- 21
MA49021	MIC	595- 22
MA49030	♦MIC	595- 23
MA49040	♦MIC	595- 24
MA49041	♦MIC	595- 25
MA49104	♦MIC	595- 26
MA49105	MIC	595- 27
MA49106	♦MIC	595- 28
MA49107	♦MIC	595- 29
MA49112	♦MIC	595- 30
MA49114	♦MIC	595- 31
MAC1-1	♦MOTA	499- 31
MAC1-2	♦MOTA	499- 70
MAC1-3	♦MOTA	500- 23
MAC1-4	♦MOTA	502- 54
MAC1-5	♦MOTA	503- 19
MAC1-6	♦MOTA	505- 44
MAC1-7	♦MOTA	507- 1
MAC1-8	♦MOTA	507-106
MAC2-1	♦MOTA	499- 32
MAC2-2	♦MOTA	499- 71
MAC2-3	♦MOTA	500- 24
MAC2-4	♦MOTA	502- 55
MAC2-5	♦MOTA	503- 20
MAC2-6	♦MOTA	505- 45
MAC2-7	♦MOTA	507- 2
MAC2-8	♦MOTA	507-107
MAC3-1	♦MOTA	508- 65
MAC3-2	♦MOTA	499- 72
MAC3-3	♦MOTA	500- 25
MAC3-4	♦MOTA	502- 56
MAC3-5	♦MOTA	503- 21
MAC3-6	♦MOTA	505- 46
MAC3-7	♦MOTA	507- 3
MAC3-8	♦MOTA	507-108
MAC4-1	♦MOTA	499- 33
MAC4-2	♦MOTA	499- 73

TYPE No.	MFRS	Pg&Line
MAC4-3	♦MOTA	500- 26
MAC4-4	♦MOTA	502- 57
MAC4-5	♦MOTA	503- 22
MAC4-6	♦MOTA	505- 47
MAC4-7	♦MOTA	507- 4
MAC4-8	♦MOTA	507-109
MAC5-1	♦MOTA	499- 34
MAC5-2	♦MOTA	499- 74
MAC5-3	♦MOTA	500- 27
MAC5-4	♦MOTA	502- 58
MAC5-5	♦MOTA	503- 23
MAC5-6	♦MOTA	505- 48
MAC5-7	♦MOTA	507- 5
MAC5-8	♦MOTA	507-110
MAC6-1	♦MOTA	499- 35
MAC6-2	♦MOTA	499- 75
MAC6-3	♦MOTA	500- 28
MAC6-4	♦MOTA	502- 59
MAC6-5	♦MOTA	503- 24
MAC6-6	♦MOTA	505- 49
MAC6-7	♦MOTA	507- 6
MAC6-8	♦MOTA	508- 1
MAC35-2	♦MOTA	499- 79
MAC35-3	♦MOTA	500- 33
MAC35-4	♦MOTA	502- 80
MAC35-5	♦MOTA	503- 31
MAC35-6	♦MOTA	505- 74
MAC35-7	♦MOTA	507- 17
MAC36-1	♦MOTA	499- 36
MAC36-2	♦MOTA	499- 80
MAC36-3	♦MOTA	500- 34
MAC36-4	♦MOTA	502- 81
MAC36-5	♦MOTA	503- 32
MAC36-6	♦MOTA	505- 75
MAC36-7	♦MOTA	507- 18
MAC37-1	♦MOTA	499- 37
MAC37-2	♦MOTA	499- 81
MAC37-3	♦MOTA	500- 35
MAC37-4	♦MOTA	502- 82
MAC37-5	♦MOTA	503- 33
MAC37-6	♦MOTA	505- 76
MAC37-7	♦MOTA	507- 19
MAC38-1	♦MOTA	499- 38
MAC38-2	♦MOTA	499- 82
MAC38-3	♦MOTA	500- 36
MAC38-4	♦MOTA	502- 83
MAC38-5	♦MOTA	503- 34
MAC38-6	♦MOTA	505- 77
MAC38-7	♦MOTA	507- 20
MACZA6.8D,10,5	DIC	177- 69
MACZA7.5D,10,5	DIC	179-118
MACZA8.2D,10,5	DIC	181-175
MACZA9.1D,10,5	DIC	185- 98
MACZA10D,10,5	DIC	187-172
MACZA11D,10,5	DIC	190- 2
MACZA12D,10,5	DIC	192- 51
MACZA13D,10,5	DIC	194-129
MACZA14D,10,5	DIC	196- 40
MACZA15D,10,5	DIC	197- 79
MACZA16D,10,5	DIC	199- 79
MACZA17D,10,5	DIC	200-184
MACZA18D,10,5	DIC	201-163
MACZA19D,10,5	DIC	203-128
MACZA20D,10,5	DIC	204-132
MACZA22D,10,5	DIC	206-101
MACZA24D,10,5	DIC	208- 97
MACZA25D,10,5	DIC	210- 3
MACZA27D,10,5	DIC	210-156
MACZA28D,10,5	DIC	212-102
MACZA30D,10,5	DIC	213- 3
MACZA33D,10,5	DIC	214-145
MACZA36D,10,5	DIC	216- 91
MACZA39D,10,5	DIC	217-164
MACZA43D,10,5	DIC	219- 69
MACZA47D,10,5	DIC	220-191
MACZA51D,10,5	DIC	222-143
MACZA56D,10,5	DIC	224- 35
MACZA60D,10,5	DIC	225-104
MACZA62D,10,5	DIC	225-174
MACZA68D,10,5	DIC	227- 44
MACZA75D,10,5	DIC	228-144
MACZA82D,10,5	DIC	230- 39
MACZA87D,10,5	DIC	231- 80
MACZA91D,10,5	DIC	231-162
MACZA100D,10,5	DIC	233- 18
MACZA105D,10,5	DIC	234- 71
MACZA110D,10,5	DIC	234-154
MACZA120D,10,5	DIC	236- 16
MACZA130D,10,5	DIC	237- 59
MACZA140D,10,5	DIC	238- 71
MACZA150D,10,5	DIC	239- 30
MACZA160D,10,5	DIC	240- 64
MACZA175D,10,5	DIC	241- 91
MACZA180D,10,5	DIC	241-161
MACZA200D,10,5	DIC	243- 41
MACZB6.8D,10,5	DIC	177- 70
MACZB7.5D,10,5	DIC	179-119

Δ-Registered with JEDEC by this manufacturer

♦-Copy of mfr's data sheet may be ordered from D.A.T.A.

1. TYPE No. CROSS INDEX

IN TYPE NUMBER SEQUENCE

TYPE No.	MFRS	Pg&Line
MACZB8.2D,10,5	DIC	181-176
MACZB9.1D,10,5	DIC	185- 99
MACZB10D,10,5	DIC	187-173
MACZB11D,10,5	DIC	190- 3
MACZB12D,10,5	DIC	192- 52
MACZB13D,10,5	DIC	196- 41
MACZB14D,10,5	DIC	196- 42
MACZB15D,10,5	DIC	197- 80
MACZB16D,10,5	DIC	199- 80
MACZB17D,10,5	DIC	200-185
MACZB18D,10,5	DIC	201-164
MACZB19D,10,5	DIC	203-129
MACZB20D,10,5	DIC	204-133
MACZB22D,10,5	DIC	206-102
MACZB24D,10,5	DIC	208- 98
MACZB25D,10,5	DIC	210- 4
MACZB27D,10,5	DIC	210-157
MACZB30D,10,5	DIC	213- 4
MACZB33D,10,5	DIC	214-146
MACZB36D,10,5	DIC	216- 92
MACZB39D,10,5	DIC	217-165
MACZB43D,10,5	DIC	219- 70
MACZB47D,10,5	DIC	220-192
MACZB51D,10,5	DIC	222-144
MACZB56D,10,5	DIC	224- 36
MACZB62D,10,5	DIC	225-175
MACZB68D,10,5	DIC	227- 45
MACZB75D,10,5	DIC	228-145
MACZB82D,10,5	DIC	230- 40
MACZB91D,10,5	DIC	231-163
MACZB100D,10,5	DIC	233- 19
MACZB105D,10,5	DIC	234- 72
MACZB110D,10,5	DIC	234-155
MACZB120D,10,5	DIC	236- 17
MACZB130D,10,5	DIC	237- 60
MACZB140D,10,5	DIC	238- 72
MACZB150D,10,5	DIC	239- 31
MACZB160D,10,5	DIC	240- 65
MACZB175D,10,5	DIC	241- 92
MACZB180D,10,5	DIC	241-162
MACZB200D,10,5	DIC	243- 42
MACZC6.8D,10,5	DIC	177- 71
MACZC7.5D,10,5	DIC	179-120
MACZC8.2D,10,5	DIC	181-177
MACZC9.1D,10,5	DIC	185-100
MACZC10D,10,5	DIC	187-174
MACZC11D,10,5	DIC	190- 4
MACZC12D,10,5	DIC	192- 53
MACZC13D,10,5	DIC	194-130
MACZC14D,10,5	DIC	196- 43
MACZC15D,10,5	DIC	197- 81
MACZC16D,10,5	DIC	199- 81
MACZC17D,10,5	DIC	200-186
MACZC18D,10,5	DIC	201-165
MACZC19D,10,5	DIC	203-130
MACZC20D,10,5	DIC	204-134
MACZC22D,10,5	DIC	206-103
MACZC24D,10,5	DIC	208- 99
MACZC25D,10,5	DIC	210- 5
MACZC27D,10,5	DIC	210-158
MACZC30D,10,5	DIC	213- 5
MACZC33D,10,5	DIC	214-147
MACZC36D,10,5	DIC	216- 93
MACZC39D,10,5	DIC	217-166
MACZC43D,10,5	DIC	219- 71
MACZC47D,10,5	DIC	221- 1
MACZC51D,10,5	DIC	222-145
MACZC56D,10,5	DIC	224- 37
MACZC62D,10,5	DIC	225-176
MACZC68D,10,5	DIC	227- 46
MACZC75D,10,5	DIC	228-146
MACZC82D,10,5	DIC	230- 41
MACZC91D,10,5	DIC	231-164
MACZC100D,10,5	DIC	233- 20
MACZC105D,10,5	DIC	234- 73
MACZC110D,10,5	DIC	234-156
MACZC120D,10,5	DIC	236- 18
MACZC130D,10,5	DIC	237- 61
MACZC140D,10,5	DIC	238- 73
MACZC150D,10,5	DIC	239- 32
MACZC160D,10,5	DIC	240- 66
MACZC175D,10,5	DIC	241- 93
MACZC180D,10,5	DIC	241-163
MACZC200D,10,5	DIC	243- 43
MACZD6.8D,10,5	DIC	177- 72
MACZD7.5D,10,5	DIC	179-121
MACZD8.2D,10,5	DIC	181-178
MACZD9.1D,10,5	DIC	185-101
MACZD10D,10,5	DIC	187-175
MACZD11D,10,5	DIC	190- 5
MACZD12D,10,5	DIC	192- 54
MACZD13D,10,5	DIC	194-131
MACZD14D,10,5	DIC	196- 44
MACZD15D,10,5	DIC	197- 82
MACZD16D,10,5	DIC	199- 82
MACZD17D,10,5	DIC	200-187
MACZD18D,10,5	DIC	201-166
MACZD19D,10,5	DIC	203-131
MACZD20D,10,5	DIC	204-135
MACZD22D,10,5	DIC	206-104
MACZD24D,10,5	DIC	208-100
MACZD25D,10,5	DIC	210- 6
MACZD27D,10,5	DIC	210-159
MACZD28D,10,5	DIC	212-103
MACZD30D,10,5	DIC	213- 6
MACZD33D,10,5	DIC	214-148
MACZD36D,10,5	DIC	216- 94
MACZD39D,10,5	DIC	217-167
MACZD43D,10,5	DIC	219- 72
MACZD47D,10,5	DIC	221- 2
MACZD51D,10,5	DIC	222-146
MACZD56D,10,5	DIC	224- 38
MACZD60D,10,5	DIC	225-105
MACZD62D,10,5	DIC	225-177
MACZD68D,10,5	DIC	227- 47
MACZD75D,10,5	DIC	228-147
MACZD82D,10,5	DIC	230- 42
MACZD87D,10,5	DIC	231- 81
MACZD91D,10,5	DIC	231-165
MACZD100D,10,5	DIC	233- 21
MACZD105D,10,5	DIC	234- 74
MACZD110D,10,5	DIC	234-157
MACZD120D,10,5	DIC	236- 19
MACZD130D,10,5	DIC	237- 62
MACZD140D,10,5	DIC	238- 74
MACZD150D,10,5	DIC	239- 33
MACZD160D,10,5	DIC	240- 67
MACZD175D,10,5	DIC	241- 94
MACZD180D,10,5	DIC	242- 1
MACZD200D,10,5	DIC	243- 44
MACZE6 8D,10,5	DIC	177- 73
MACZE7 5D,10,5	DIC	179-122
MACZE8 2D,10,5	DIC	181-179
MACZE9.1D,10,5	DIC	185-102
MACZE10D,10,5	DIC	187-176
MACZE11D,10,5	DIC	190- 6
MACZE12D,10,5	DIC	192- 55
MACZE13D,10,5	DIC	194-132
MACZE14D,10,5	DIC	196- 16
MACZE15D,10,5	DIC	197- 83
MACZE16D,10,5	DIC	199- 83
MACZE17D,10,5	DIC	200-188
MACZE18D,10,5	DIC	201-167
MACZE19D,10,5	DIC	203-132
MACZE20D,10,5	DIC	204-136
MACZE22D,10,5	DIC	206-105
MACZE24D,10,5	DIC	208-101
MACZE25D,10,5	DIC	210- 7
MACZE27D,10,5	DIC	210-160
MACZE30D,10,5	DIC	213- 7
MACZE33D,10,5	DIC	214-149
MACZE36D,10,5	DIC	216- 95
MACZE39D,10,5	DIC	217-168
MACZE43D,10,5	DIC	219- 73
MACZE47D,10,5	DIC	221- 3
MACZE51D,10,5	DIC	222-147
MACZE56D,10,5	DIC	224- 39
MACZE62D,10,5	DIC	225-178
MACZE68D,10,5	DIC	227- 48
MACZE75D,10,5	DIC	228-148
MACZE82D,10,5	DIC	230- 43
MACZE91D,10,5	DIC	231-166
MACZE100D,10,5	DIC	233- 22
MACZE105D,10,5	DIC	234- 75
MACZE110D,10,5	DIC	234-158
MACZE120D,10,5	DIC	236- 20
MACZE130D,10,5	DIC	237- 63
MACZE140D,10,5	DIC	238- 75
MACZE150D,10,5	DIC	239- 34
MACZE160D,10,5	DIC	240- 68
MACZE175D,10,5	DIC	241- 95
MACZE180D,10,5	DIC	242- 2
MACZE200D,10,5	DIC	243- 45
MACZF1.8D,10,5	DIC	165- 95
MACZF2.0D,10,5	DIC	165-117
MACZF2.2D,10,5	DIC	165-137
MACZF2 4D,10,5	DIC	165-166
MACZF2 7D,10,5	DIC	166- 36
MACZF3.0D,10,5	DIC	166-111
MACZF3 3D,10,5	DIC	167- 9
MACZF3 6D,10,5	DIC	167-159
MACZF3 9D,10,5	DIC	168-112
MACZF4.3D,10,5	DIC	169-111
MACZF4.7D,10,5	DIC	170-110
MACZF5 1D,10,5	DIC	171-156
MACZF5.6D,10,5	DIC	172-201
MACZF6 2D,10,5	DIC	174-191
MACZF6.8D,10,5	DIC	177- 74
MACZF7 5D,10,5	DIC	179-123
MACZF8 2D,10,5	DIC	181-180
MACZF9.1D,10,5	DIC	185-103
MACZF10D,10,5	DIC	187-177
MACZF12D,10,5	DIC	192- 56
MACZG2 4D,10,5	DIC	165-167
MACZG2 7D,10,5	DIC	166- 37
MACZG3 0D,10,5	DIC	166-112
MACZG3 3D,10,5	DIC	167- 10
MACZG3.6D,10,5	DIC	167-160
MACZG3.9D,10,5	DIC	168-113
MACZG4.3D,10,5	DIC	169-112
MACZG4 7D,10,5	DIC	170-111
MACZG5 1D,10,5	DIC	171-157
MACZG5.6D,10,5	DIC	172-202
MACZG6 2D,10,5	DIC	174-192
MACZG6 8D,10,5	DIC	177- 75
MACZG7.5D,10,5	DIC	179-124
MACZG8 2D,10,5	DIC	181-181
MACZG9 1D,10,5	DIC	185-104
MACZG10D,10,5	DIC	187-178
MACZG12D,10,5	DIC	192- 57
MB200	MSC	273- 20
MB201	MSC	276- 67
MB202	MSC	280- 20
MB203	MSC	280- 93
MB204	MSC	281- 54
MB205	MSC	281- 78
MB206	MSC	283- 69
MB207	MSC	273- 21
MB208	MSC	276- 68
MB209	MSC	280- 21
MB210	MSC	280- 94
MB211	MSC	281- 55
MB212	MSC	281- 79
MB213	MSC	283- 70
MB214	MSC	273- 22
MB215	MSC	280- 22
MB216	MSC	283- 71
MB217	MSC	284- 69
MB218	MSC	286- 14
MB219	MSC	286- 63
MB220	MSC	287- 72
MB221	MSC	273- 23
MB222	MSC	280- 23
MB223	MSC	283- 72
MB224	MSC	284- 70
MB225	MSC	286- 15
MB226	MSC	286- 64
MB227	MSC	287- 73
MB228	MSC	302- 38
MB229	MSC	313- 41
MB230	MSC	322- 99
MB231	MSC	332- 29
MB232	MSC	341- 60
MB233	MSC	349- 50
MB234	MSC	362- 5
MB235	MSC	372- 30
MB236	MSC	301- 90
MB237	MSC	312- 87
MB238	MSC	322- 49
MB239	MSC	331- 74
MB240	MSC	341- 18
MB241	MSC	348- 98
MB242	MSC	361- 65
MB243	MSC	371- 92
MB244	MSC	300- 83
MB245	MSC	311- 67
MB246	MSC	321- 83
MB247	MSC	330- 49
MB248	MSC	340- 54
MB249	MSC	347- 80
MB250	MSC	360- 65
MB251	MSC	370-106
MB252	MSC	318- 95
MB253	MSC	321- 17
MB254	MSC	329- 66
MB255	MSC	339-103
MB256	MSC	346- 98
MB257	MSC	299- 58
MB258	MSC	300- 10
MB259	MSC	310- 19
MB260	MSC	310- 93
MB261	MSC	320- 77
MB262	MSC	321- 18
MB263	MSC	328- 86
MB264	MSC	329- 67
MB265	MSC	339- 41
MB266	MSC	339-104
MB267	MSC	346- 30
MB268	MSC	346- 99
MB269	MSC	293- 63
MB270	MSC	300- 11
MB271	MSC	310- 94
MB272	MSC	321- 19
MB273	MSC	329- 68
MB274	MSC	339-105
MB275	MSC	346-100
MB276	MSC	359-108
MB277	MSC	370- 46
MBCZA6 8D,10,5	DIC	177- 76
MBCZA7 5D,10,5	DIC	179-125
MBCZA8 2D,10,5	DIC	181-182
MBCZA9 1D,10,5	DIC	185-105
MBCZA10D,10,5	DIC	187-179
MBCZA11D,10,5	DIC	190- 7
MBCZA12D,10,5	DIC	192- 58
MBCZA13D,10,5	DIC	194-133
MBCZA14D,10,5	DIC	196- 45
MBCZA15D,10,5	DIC	197- 84
MBCZA16D,10,5	DIC	199- 84
MBCZA17D,10,5	DIC	200-189
MBCZA18D,10,5	DIC	201-168
MBCZA19D,10,5	DIC	203-133
MBCZA20D,10,5	DIC	204-137
MBCZA22D,10,5	DIC	206-106
MBCZA24D,10,5	DIC	208-102
MBCZA25D,10,5	DIC	210- 8
MBCZA27D,10,5	DIC	210-161
MBCZA28D,10,5	DIC	212-104
MBCZA30D,10,5	DIC	213- 8
MBCZA33D,10,5	DIC	214-150
MBCZA36D,10,5	DIC	216- 96
MBCZA39D,10,5	DIC	217-169
MBCZA43D,10,5	DIC	219- 74
MBCZA47D,10,5	DIC	221- 4
MBCZA51D,10,5	DIC	222-148
MBCZA56D,10,5	DIC	224- 40
MBCZA60D,10,5	DIC	225-106
MBCZA62D,10,5	DIC	225-179
MBCZA68D,10,5	DIC	227- 49
MBCZA75D,10,5	DIC	228-149
MBCZA82D,10,5	DIC	230- 44
MBCZA87D,10,5	DIC	231- 82
MBCZA91D,10,5	DIC	231-167
MBCZA100D,10,5	DIC	233- 23
MBCZA105D,10,5	DIC	234- 76
MBCZA110D,10,5	DIC	235- 1
MBCZA120D,10,5	DIC	236- 21
MBCZA130D,10,5	DIC	237- 64
MBCZA140D,10,5	DIC	238- 76
MBCZA150D,10,5	DIC	239- 35
MBCZA160D,10,5	DIC	240- 69
MBCZA175D,10,5	DIC	241- 96
MBCZA180D,10,5	DIC	242- 3
MBCZA200D,10,5	DIC	243- 46
MBCZB6.8D,10,5	DIC	177- 77
MBCZB7 5D,10,5	DIC	179-126
MBCZB8.2D,10,5	DIC	181-183
MBCZB9 1D,10,5	DIC	185-106
MBCZB10D,10,5	DIC	187-180
MBCZB11D,10,5	DIC	190- 8
MBCZB12D,10,5	DIC	192- 59
MBCZB13D,10,5	DIC	194-134
MBCZB14D,10,5	DIC	196- 46
MBCZB15D,10,5	DIC	197- 85
MBCZB16D,10,5	DIC	199- 85
MBCZB17D,10,5	DIC	200-190
MBCZB18D,10,5	DIC	201-169
MBCZB19D,10,5	DIC	203-134
MBCZB20D,10,5	DIC	204-138
MBCZB22D,10,5	DIC	206-107
MBCZB24D,10,5	DIC	208-103
MBCZB25D,10,5	DIC	210- 9
MBCZB27D,10,5	DIC	210-162
MBCZB30D,10,5	DIC	213- 9
MBCZB33D,10,5	DIC	214-151
MBCZB36D,10,5	DIC	216- 97
MBCZB39D,10,5	DIC	217-170
MBCZB43D,10,5	DIC	219- 75
MBCZB47D,10,5	DIC	221- 5
MBCZB51D,10,5	DIC	222-149
MBCZB56D,10,5	DIC	224- 41
MBCZB62D,10,5	DIC	225-180
MBCZB68D,10,5	DIC	227- 50
MBCZB75D,10,5	DIC	228-150
MBCZB82D,10,5	DIC	230- 45
MBCZB91D,10,5	DIC	231-168
MBCZB100D,10,5	DIC	233- 24
MBCZB105D,10,5	DIC	234- 77
MBCZB110D,10,5	DIC	235- 2
MBCZB120D,10,5	DIC	236- 22
MBCZB130D,10,5	DIC	237- 65
MBCZB140D,10,5	DIC	238- 77
MBCZB150D,10,5	DIC	239- 36
MBCZB160D,10,5	DIC	240- 70
MBCZB175D,10,5	DIC	241- 97
MBCZB180D,10,5	DIC	242- 4
MBCZB200D,10,5	DIC	243- 47
MBCZC6 8D,10,5	DIC	177- 78
MBCZC7 5D,10,5	DIC	179-127
MBCZC8 2D,10,5	DIC	181-184
MBCZC9.1D,10,5	DIC	185-107
MBCZC10D,10,5	DIC	187-181
MBCZC11D,10,5	DIC	190- 9
MBCZC12D,10,5	DIC	192- 60
MBCZC13D,10,5	DIC	194-135
MBCZC14D,10,5	DIC	196- 47
MBCZC15D,10,5	DIC	197- 86
MBCZC16D,10,5	DIC	199- 86
MBCZC17D,10,5	DIC	200-191
MBCZC18D,10,5	DIC	201-170
MBCZC19D,10,5	DIC	203-135
MBCZC20D,10,5	DIC	204-139
MBCZC22D,10,5	DIC	206-108
MBCZC24D,10,5	DIC	208-104
MBCZC25D,10,5	DIC	210- 10
MBCZC27D,10,5	DIC	210-163
MBCZC30D,10,5	DIC	213- 10
MBCZC33D,10,5	DIC	214-152
MBCZC36D,10,5	DIC	216- 98
MBCZC39D,10,5	DIC	217-171
MBCZC43D,10,5	DIC	219- 76
MBCZC47D,10,5	DIC	221- 6
MBCZC51D,10,5	DIC	222-150
MBCZC56D,10,5	DIC	224- 42
MBCZC62D,10,5	DIC	225-181
MBCZC68D,10,5	DIC	227- 51
MBCZC75D,10,5	DIC	228-151
MBCZC82D,10,5	DIC	230- 46
MBCZC91D,10,5	DIC	231-169
MBCZC100D,10,5	DIC	233- 25
MBCZC105D,10,5	DIC	234- 78
MBCZC110D,10,5	DIC	235- 3
MBCZC120D,10,5	DIC	236- 23
MBCZC130D,10,5	DIC	237- 66
MBCZC140D,10,5	DIC	238- 78
MBCZC150D,10,5	DIC	239- 37
MBCZC160D,10,5	DIC	240- 71
MBCZC175D,10,5	DIC	241- 98
MBCZC180D,10,5	DIC	242- 5
MBCZC200D,10,5	DIC	243- 48
MBCZD6 8D,10,5	DIC	177- 79
MBCZD7 5D,10,5	DIC	179-128
MBCZD8 2D,10,5	DIC	181-185
MBCZD9 1D,10,5	DIC	185-108
MBCZD10D,10,5	DIC	187-182
MBCZD11D,10,5	DIC	190- 10
MBCZD12D,10,5	DIC	192- 61
MBCZD13D,10,5	DIC	194-136
MBCZD14D,10,5	DIC	196- 48

Δ-Registered with JEDEC by this manufacturer

♦-Copy of mfr's data sheet may be ordered from D.A.T.A.

1. TYPE No. CROSS INDEX

IN TYPE NUMBER SEQUENCE

TYPE No.	MFRS	Pg&Line
MBCZD15D,10,5	DIC	197- 87
MBCZD16D,10,5	DIC	199- 87
MBCZD17D,10,5	DIC	201- 1
MBCZD18D,10,5	DIC	201-171
MBCZD19D,10,5	DIC	203-136
MBCZD20D,10,5	DIC	204-140
MBCZD22D,10,5	DIC	206-109
MBCZD24D,10,5	DIC	208-105
MBCZD25D,10,5	DIC	210- 11
MBCZD27D,10,5	DIC	210-164
MBCZD28D,10,5	DIC	212-105
MBCZD30D,10,5	DIC	213- 11
MBCZD33D,10,5	DIC	214-153
MBCZD36D,10,5	DIC	216- 99
MBCZD39D,10,5	DIC	217-172
MBCZD43D,10,5	DIC	219- 77
MBCZD47D,10,5	DIC	221- 7
MBCZD51D,10,5	DIC	222-151
MBCZD56D,10,5	DIC	224- 43
MBCZD60D,10,5	DIC	225-107
MBCZD62D,10,5	DIC	225-182
MBCZD68D,10,5	DIC	227- 52
MBCZD75D,10,5	DIC	228-152
MBCZD82D,10,5	DIC	230- 47
MBCZD87D,10,5	DIC	231- 83
MBCZD91D,10,5	DIC	231-170
MBCZD100D,10,5	DIC	233- 26
MBCZD105D,10,5	DIC	234- 79
MBCZD110D,10,5	DIC	235- 4
MBCZD120D,10,5	DIC	236- 24
MBCZD130D,10,5	DIC	237- 67
MBCZD140D,10,5	DIC	238- 79
MBCZD150D,10,5	DIC	239- 38
MBCZD160D,10,5	DIC	240- 72
MBCZD175D,10,5	DIC	241- 99
MBCZD180D,10,5	DIC	242- 6
MBCZD200D,10,5	DIC	243- 49
MBCZE6 8D,10,5	DIC	177- 80
MBCZE7 5D,10,5	DIC	179-129
MBCZE8 2D,10,5	DIC	181-186
MBCZE9 1D,10,5	DIC	185-109
MBCZE10D,10,5	DIC	187-183
MBCZE11D,10,5	DIC	190- 11
MBCZE12D,10,5	DIC	192- 62
MBCZE13D,10,5	DIC	194-137
MBCZE14D,10,5	DIC	196- 49
MBCZE15D,10,5	DIC	197- 88
MBCZE16D,10,5	DIC	199- 88
MBCZE17D,10,5	DIC	201- 2
MBCZE18D,10,5	DIC	201-172
MBCZE19D,10,5	DIC	203-137
MBCZE20D,10,5	DIC	204-141
MBCZE22D,10,5	DIC	206-110
MBCZE24D,10,5	DIC	208-106
MBCZE25D,10,5	DIC	210- 12
MBCZE27D,10,5	DIC	210-165
MBCZE30D,10,5	DIC	213- 12
MBCZE33D,10,5	DIC	214-154
MBCZE36D,10,5	DIC	216-100
MBCZE39D,10,5	DIC	217-173
MBCZE43D,10,5	DIC	219- 78
MBCZE47D,10,5	DIC	221- 8
MBCZE51D,10,5	DIC	222-152
MBCZE56D,10,5	DIC	224- 44
MBCZE62D,10,5	DIC	226- 1
MBCZE68D,10,5	DIC	227- 53
MBCZE75D,10,5	DIC	228-153
MBCZE82D,10,5	DIC	230- 48
MBCZE91D,10,5	DIC	231-171
MBCZE100D,10,5	DIC	233- 27
MBCZE105D,10,5	DIC	234- 80
MBCZE110D,10,5	DIC	235- 5
MBCZE120D,10,5	DIC	236- 25
MBCZE130D,10,5	DIC	237- 68
MBCZE140D,10,5	DIC	238- 80
MBCZE150D,10,5	DIC	239- 39
MBCZE160D,10,5	DIC	240- 73
MBCZE175D,10,5	DIC	241-100
MBCZE180D,10,5	DIC	242- 7
MBCZE200D,10,5	DIC	243- 50
MBCZF1 8D,10,5	DIC	165- 96
MBCZF2 0D,10,5	DIC	165-118
MBCZF2 2D,10,5	DIC	165-138
MBCZF2 4D,10,5	DIC	165-168

TYPE No.	MFRS	Pg&Line
MBCZF2 7D,10,5	DIC	166- 38
MBCZF3 0D,10,5	DIC	166-113
MBCZF3 3D,10,5	DIC	167- 11
MBCZF3 6D,10,5	DIC	167-161
MBCZF3 9D,10,5	DIC	168-114
MBCZF4 3D,10,5	DIC	169-113
MBCZF4 7D,10,5	DIC	170-112
MBCZF5 1D,10,5	DIC	171-158
MBCZF5 6D,10,5	DIC	172-203
MBCZF6 2D,10,5	DIC	174-193
MBCZF6 8D,10,5	DIC	177- 81
MBCZF7 5D,10,5	DIC	179-130
MBCZF8.2D,10,5	DIC	181-187
MBCZF9 1D,10,5	DIC	185-110
MBCZF10D,10,5	DIC	187-184
MBCZF12D,10,5	DIC	192- 63
MBCZG2 4D,10,5	DIC	165-169
MBCZG2 7D,10,5	DIC	166- 39
MBCZG3 0D,10,5	DIC	166-114
MBCZG3 3D,10,5	DIC	167- 12
MBCZG3 6D,10,5	DIC	167-162
MBCZG3 9D,10,5	DIC	168-115
MBCZG4 3D,10,5	DIC	169-114
MBCZG4 7D,10,5	DIC	170-113
MBCZG5 1D,10,5	DIC	171-159
MBCZG5 6D,10,5	DIC	173- 1
MBCZG6 2D,10,5	DIC	174-194
MBCZG6 8D,10,5	DIC	177- 82
MBCZG7 5D,10,5	DIC	179-131
MBCZG8 2D,10,5	DIC	181-188
MBCZG9 1D,10,5	DIC	185-111
MBCZG10D,10,5	DIC	187-185
MBCZG12D,10,5	DIC	192- 64
MBD101	♦MOTA	575- 18
MBD501	♦MOTA	593- 37
MBD701	♦MOTA	593- 38
MBD5300	♦MOTA	292- 31
MBD5400	♦MOTA	292- 32
MBD5500	♦MOTA	292- 34
MBS4991	♦MOTA	498- 86
MBS4992	♦MOTA	498- 87
MC0	♦EAS	527-105
MC001	♦MSC	274- 85
MC001A	♦MSC	274- 86
MC1	♦EAS	529- 11
MC002	♦MSC	282- 9
MC2△	♦EAS	531- 35
MC2⊠	ORIJ	272- 24
MC3	♦EAS	533- 1
MC4B1,C1	MSC	245- 15
MC4B2,C2	MSC	245- 16
MC005	MSC	285-109
MC5	♦EAS	534- 76
MC5B1,C1	MSC	245- 35
MC5B2,C2	MSC	245- 36
MC6A1,B1,C1	MSC	245- 41
MC6A2,B2,C2	MSC	245- 42
MC7△	♦EAS	537- 76
MC7A1,B1,C1	MSC	245- 43
MC7A2,B2,C2	MSC	245- 44
MC8A1,B1	MSC	245- 49
MC8A2,B2	MSC	245- 50
MC9A1,B1	MSC	245- 51
MC9A2,B2	MSC	245- 52
MC10△	♦EAS	540- 54
MC10A1,B1	MSC	245- 56
MC10A2,B2	MSC	245- 57
MC11A1,B1	MSC	245- 59
MC11A2,B2	MSC	245- 60
MC12A1,B1	MSC	245- 61
MC12A2,B2	MSC	245- 62
MC13A1,B1	MSC	245- 63
MC13A2,B2	MSC	245- 64
MC14A1,B1	MSC	245- 65
MC14A2,B2	MSC	245- 66
MC15△	♦EAS	545- 11
MC15A1,B1	MSC	245- 67
MC15A2,B2	MSC	245- 68
MC19	SOIF	255- 82
MC020	MSC	257- 48
MC020A	MSC	257- 49
MC021	MSC	250- 59
MC021A	MSC	250- 60
MC022	MSC	254- 32
MC022A	MSC	254- 33

TYPE No.	MFRS	Pg&Line
MC22△	♦EAS	549- 82
MC22⊠	SOIF	279- 2
MC023	MSC	256- 44
MC023A	MSC	256- 45
MC025	MSC	319- 13
MC030	MSC	258- 97
MC030A	MSC	258- 98
MC30△	SOD	292- 56
MC031	MSC	393- 81
MC031A	MSC	393- 82
MC032	MSC	393- 83
MC032A	MSC	393- 84
MC040	MSC	259- 61
MC040A	MSC	259- 62
MC041	MSC	396- 64
MC041A	MSC	396- 65
MC042	MSC	396- 66
MC042A	MSC	396- 67
MC42	SOIF	282- 70
MC43	SOIF	284- 43
MC44	SOIF	285- 42
MC45	SOIF	286- 37
MC46	SOIF	279- 3
MC47	SOIF	282- 71
MC48	SOIF	284- 44
MC49	SOIF	285- 43
MC050	MSC	259-103
MC050A	MSC	259-104
MC50⊠	MSC	274- 87
MC50%	SOIF	286- 38
MC051	MSC	399- 18
MC051A	MSC	399- 19
MC51⊠	MSC	280- 17
MC51%	SOIF	258- 70
MC052	MSC	399- 20
MC052A	MSC	399- 21
MC52	MSC	275- 52
MC53	MSC	267- 57
MC54	MSC	282- 10
MC55	MSC	273- 30
MC56	MSC	268- 66
MC57	MSC	271- 28
MC58	MSC	270-100
MC59	MSC	273- 40
MC060	MSC	260- 10
MC060A	MSC	260- 11
MC60	MSC	252-101
MC061	MSC	400- 86
MC061A	MSC	400- 87
MC61	MSC	255-106
MC062	MSC	400- 88
MC062A	MSC	400- 89
MC62	MSC	257- 10
MC63	MSC	256- 17
MC64	MSC	258- 38
MC65	MSC	259- 37
MC66	MSC	259- 91
MC67	MSC	260- 12
MC68	MSC	260- 35
MC69	MSC	172- 91
MC070	MSC	260- 32
MC070A	MSC	260- 33
MC70	MSC	176-113
MC71	MSC	179- 28
MC72	MSC	184-209
MC73	MSC	191-151
MC080	MSC	260- 40
MC080A	MSC	260- 41
MC081	MSC	403- 48
MC081A	MSC	403- 49
MC082	MSC	403- 50
MC082A	MSC	403- 51
MC091	MSC	405- 57
MC091A	MSC	405- 58
MC092	MSC	407- 9
MC092A	MSC	407- 10
MC093	MSC	407- 86
MC093A	MSC	407- 87
MC094	MSC	408-101
MC094A	MSC	408-102
MC095	MSC	405- 59
MC095A	MSC	405- 60
MC096	MSC	407- 11
MC096A	MSC	407- 12
MC097	MSC	407- 88
MC097A	MSC	407- 89
MC098	MSC	408-103
MC098A	MSC	408-104
MC100⊠	MSC	260- 74
MC100,A,B	CRY	536- 71
	KSC	
MC100A⊠	MSC	260- 75
MC101,A,B	CRY	540- 55
	KSC	
MC102,A,B	CRY	545- 12
	KSC	
MC103⊠	MSC	270-101
MC103,A,B	CRY	549- 83
	KSC	
MC104,A,B	CRY	553- 73
	KSC	
MC105,A,B	CRY	557- 10
	KSC	
MC106,A,B	CRY	536- 72
	KSC	
MC107,A,B	CRY	540- 56
	KSC	
MC108,A,B	CRY	545- 13
	KSC	
MC109,A,B	CRY	549- 84
	KSC	
MC110⊠	MSC	260- 80
MC110,A,B	CRY	553- 74
	KSC	

TYPE No.	MFRS	Pg&Line
MC110A⊠	MSC	260- 81
MC110AS	MSC	260- 82
MC110S	MSC	260- 83
MC111,A,B	CRY	557- 11
	KSC	
MC112,A,B	CRY	536- 73
	KSC	
MC113,A,B	CRY	540- 57
	KSC	
MC114,A,B	CRY	545- 14
	KSC	
MC115,A,B	CRY	549- 85
	KSC	
MC116,A,B	CRY	553- 75
	KSC	
MC117,A,B	CRY	557- 12
	KSC	
MC120	MSC	260- 87
MC120A	MSC	260- 88
MC120AS	MSC	260- 89
MC120S	MSC	260- 90
MC130	MSC	260- 96
MC130A	MSC	260- 97
MC130AS	MSC	260- 98
MC130S	MSC	260- 99
MC140	MSC	260-101
MC140A	MSC	260-102
MC140AS	MSC	260-103
MC140S	MSC	260-104
MC150	MSC	260-109
MC150A	MSC	260-110
MC150AS	MSC	261- 1
MC150S	MSC	261- 2
MC151	MSC	369- 24
MC152	MSC	369- 21
MC153	MSC	369- 19
MC154	MSC	389- 34
MC155	MSC	389- 29
MC156	MSC	389- 24
MC157	MSC	393- 73
MC158	MSC	393- 68
MC159	MSC	393- 61
MC160	MSC	396- 54
MC161	MSC	396- 50
MC162	MSC	396- 43
MC170	MSC	256- 18
MC200△	MSC	399- 8
MC200⊠	♦EAS	527-106
MC201△	MSC	398-107
MC201⊠	♦EAS	529- 12
MC202△	MSC	400- 80
MC202⊠	♦EAS	531- 36
MC203△	MSC	400- 70
MC203⊠	♦EAS	533- 2
MC204	MSC	402- 18
MC205△	MSC	402- 10
MC205⊠	♦EAS	534- 77
MC206	MSC	403- 43
MC207	MSC	403- 32
MC208	MSC	404- 51
MC209	MSC	404- 52
MC210	MSC	405- 52
MC211	MSC	405- 39
MC212	MSC	406- 67
MC213	MSC	406- 64
MC214	MSC	407- 5
MC215	MSC	406-100
MC216	MSC	407- 60
MC217	MSC	407- 57
MC218	MSC	407- 82
MC219	MSC	407- 76
MC220	MSC	408- 22
MC221	MSC	408- 15
MC222	MSC	408- 97
MC223	MSC	408- 91
MC224	MSC	409- 26
MC225	MSC	409- 24
MC226	MSC	409- 44
MC227	MSC	409- 41
MC228	MSC	409- 70
MC229	MSC	409- 68
MC230	MSC	409-107
MC231	MSC	409-100
MC300	♦EAS	527-107
MC301	♦EAS	529- 13
MC302	♦EAS	531- 37
MC303	♦EAS	533- 3
MC305	♦EAS	534- 78
MC400	♦EAS	527-108
MC401	♦EAS	529- 14
MC402	♦EAS	531- 38
MC403	♦EAS	533- 4
MC405	♦EAS	534- 79
MC407	♦EAS	537- 77
MC410	♦EAS	540- 58
MC415	♦EAS	545- 15
MC422	♦EAS	549- 86
MC433	♦MSC	275- 53
MC456	MSC	248- 16
MC456A	MSC	248- 33
MC457	MSC	251- 99
MC457A	MSC	252- 11
MC458	MSC	255- 72
MC458A	MSC	255-107
MC459	MSC	256-100
MC459A	MSC	257- 11
MC461	MSC	248- 6
MC461A	MSC	248- 34
MC462	MSC	251- 88
MC462A	MSC	252- 12
MC463	MSC	256- 95
MC463A	MSC	257- 12
MC464	MSC	255- 64
MC464A	MSC	255-108

TYPE No.	MFRS	Pg&Line
MC482	MSC	249- 27
MC482A	MSC	249- 21
MC482B	MSC	249- 22
MC483	MSC	252-107
MC483A	MSC	252-102
MC483B	MSC	252-103
MC484	MSC	256- 6
MC484A	MSC	255-109
MC484B	MSC	255-110
MC485	MSC	257- 20
MC485A	MSC	257- 13
MC485B	MSC	257- 14
MC486	MSC	258- 23
MC486A	MSC	258- 18
MC486B	MSC	258- 19
MC487	MSC	259- 10
MC487A	MSC	259- 8
MC487B	MSC	259- 9
MC488	MSC	259- 87
MC488A	MSC	259- 85
MC488B	MSC	259- 86
MC500A	MSC	585- 96
MC500B	MSC	585- 97
MC501A	MSC	585- 98
MC501B	MSC	585- 99
MC502A	MSC	585-100
MC502B	MSC	585-101
MC503A	MSC	585-102
MC503B	MSC	585-103
MC504A	MSC	585-104
MC504B	MSC	585-105
MC505A	MSC	585-106
MC505B	MSC	585-107
MC506A	MSC	585-108
MC506B	MSC	585-109
MC507A	MSC	585-110
MC507B	MSC	586- 1
MC508A	MSC	586- 2
MC508B	MSC	586- 3
MC509A	MSC	586- 4
MC509B	MSC	586- 5
MC510A	MSC	586- 6
MC510B	MSC	586- 7
MC511A	MSC	586- 8
MC511B	MSC	586- 9
MC512A	MSC	586- 10
MC512B	MSC	586- 11
MC513A	MSC	586- 12
MC513B	MSC	586- 13
MC514A	MSC	586- 14
MC514B	MSC	586- 15
MC515A	MSC	586- 16
MC515B	MSC	586- 17
MC516A	MSC	586- 18
MC516B	MSC	586- 19
MC517A	MSC	586- 20
MC517B	MSC	586- 21
MC518A	MSC	586- 22
MC518B	MSC	586- 23
MC519A	MSC	586- 24
MC519B	MSC	586- 25
MC643	♦MSC	283- 2
MC643A	♦MSC	283- 3
MC658	♦MSC	280- 54
MC658A	♦MSC	280- 55
MC659	♦MSC	273- 92
MC659A	♦MSC	273- 93
MC660	♦MSC	280- 56
MC660A	♦MSC	280- 57
MC661	♦MSC	283- 88
MC661A	♦MSC	283- 89
MC662	♦MSC	279- 92
MC662A	♦MSC	279- 93
MC663	♦MSC	279- 94
MC663A	♦MSC	279- 61
MC678	MSC	258- 1
MC778	♦MSC	280- 82
MC779	♦MSC	283- 4
MC794	♦MSC	273- 80
MC795	♦MSC	273-109
MC796	♦MSC	273-110
MC797	♦MSC	280- 62
MC798	♦MSC	280- 47
MC799	♦MSC	280- 63
MC800	♦MSC	280- 64
MC801	♦MSC	281- 41
MC802	♦MSC	281- 42
MC803	♦MSC	283- 27
MC804	♦MSC	283- 28
MC806	♦MSC	280- 26
MC807	♦MSC	283- 5
MC808	♦MSC	280- 27
MC809	♦MSC	283- 78
MC837	♦MSC	279- 95
MC837A	♦MSC	279- 62
MC838	♦MSC	281- 43
MC839	♦MSC	283- 29
MC840	♦MSC	272- 84
MC841	♦MSC	281- 33
MC842	♦MSC	283- 6
MC843	♦MSC	283-105
MC844	♦MSC	279- 96
MC845	♦MSC	283- 30
MC890	MSC	252- 86
MC891	♦MSC	273- 94
MC892	♦MSC	280- 58
MC893	♦MSC	283- 90
MC903	♦MSC	270-102
MC903A	♦MSC	270-103
MC904	♦MSC	269- 23
MC904A	♦MSC	269- 24
MC905	♦MSC	267- 58
MC905A	♦MSC	267- 59
MC906	♦MSC	267- 60

△-Registered with JEDEC by this manufacturer

♦-Copy of mfr's data sheet may be ordered from D.A.T.A.

1. TYPE No. CROSS INDEX

IN TYPE NUMBER SEQUENCE

TYPE No.	MFRS	Pg&Line
MC906A	♦ MSC	267- 61
MC907	♦ MSC	269- 25
MC907A	♦ MSC	269- 26
MC908	♦ MSC	270-104
MC908A	♦ MSC	270-105
MC914	♦ MSC	277- 78
MC914A	♦ MSC	277- 79
MC916	♦ MSC	277- 80
MC916A	♦ MSC	277- 81
MC1031	MSC	393- 74
MC1031A	MSC	393- 75
MC1032	MSC	393- 76
MC1032A	MSC	393- 77
MC1041	MSC	396- 55
MC1041A	MSC	396- 56
MC1042	MSC	396- 57
MC1042A	MSC	396- 58
MC1051	MSC	399- 9
MC1051A	MSC	399- 10
MC1052	MSC	399- 11
MC1052A	MSC	399- 12
MC1061	MSC	400- 77
MC1061A	MSC	400- 78
MC1062	MSC	400- 72
MC1062A	MSC	400- 73
MC1081	MSC	403- 40
MC1081A	MSC	403- 41
MC1082	MSC	403- 35
MC1082A	MSC	403- 36
MC1091	MSC	405- 42
MC1091A	MSC	405- 43
MC1092	MSC	406-108
MC1092A	MSC	406-101
MC1093	MSC	407- 77
MC1093A	MSC	407- 78
MC1094	MSC	408- 92
MC1094A	MSC	408- 93
MC1095	MSC	405- 44
MC1095A	MSC	405- 45
MC1096	MSC	406-102
MC1096A	MSC	406-103
MC1097	MSC	407- 79
MC1097A	MSC	407- 80
MC1098	MSC	408- 94
MC1098A	MSC	408- 95
MC1174P1	MSC	284- 79
MC1174P2	MSC	284- 80
MC1174Q	MSC	284- 81
MC1175P1	MSC	284- 82
MC1175P2	MSC	284- 83
MC1175Q	MSC	284- 84
MC1176P1	MSC	284- 85
MC1176P2	MSC	284- 86
MC1176Q	MSC	284- 87
MC1177P1	MSC	284- 88
MC1177P2	MSC	284- 89
MC1177Q	MSC	284- 90
MC1178P1	MSC	284- 91
MC1178P2	MSC	284- 92
MC1178Q	MSC	284- 93
MC1179P1	MSC	284- 94
MC1179P2	MSC	284- 95
MC1179Q	MSC	284- 96
MC1354	MSC	586- 26
MC1444	MSC	586- 27
MC1462	MSC	586- 28
MC1465	MSC	586- 29
MC1511	MSC	280-102
MC1512	MSC	280-101
MC1513	MSC	281- 9
MC1514	MSC	281- 87
MC1515	MSC	281- 88
MC1520	MSC	254- 37
MC1521	MSC	256- 47
MC1522	MSC	257- 53
MC1523	MSC	258-102
MC1524	MSC	259- 69
MC1525	MSC	259-107
MC1526	MSC	260- 16
MC1527	MSC	260- 34
MC1528	MSC	260- 45
MC1529	MSC	260- 56
MC1545	♦ MSC	273- 69
MC1546	♦ MSC	280- 72
MC1547	♦ MSC	282- 11
MC1548	♦ MSC	284- 14
MC1549	♦ MSC	284-105
MC1550	♦ MSC	286- 20
MC5321	MITJ	267- 62
MC6007,A	MSC	172-134
MC6008,A	MSC	174-131
MC6009,A	MSC	176-130
MC6010,A	MSC	177- 14
MC6011,A	MSC	179- 66
MC6012,A	MSC	181-120
MC6013,A	MSC	185- 46
MC6014,A	MSC	187-114
MC6015,A	MSC	189-154
MC6016,A	MSC	191-199
MC6017,A	MSC	194- 83
MC6018,A	MSC	197- 29
MC6019,A	MSC	199- 35
MC6020,A	MSC	201-113
MC6021,A	MSC	204- 88
MC6022,A	MSC	206- 55
MC6023,A	MSC	208- 55
MC6024,A	MSC	210-120
MC6025,A	MSC	212-157
MC6026,A	MSC	214-107
MC6027,A	MSC	216- 70
MC6028,A	MSC	217-144
MC6029,A	MSC	219- 49
MC6030,A	MSC	220-170
MC6107,A	MSC	173- 60

TYPE No.	MFRS	Pg&Line
MC6108,A	MSC	175- 34
MC6109,A	MSC	176-144
MC6110,A	MSC	177-140
MC6111,A	MSC	180- 7
MC6112,A	MSC	182- 54
MC6113,A	MSC	185-165
MC6114,A	MSC	188- 58
MC6115,A	MSC	190- 58
MC6116,A	MSC	192-126
MC6117,A	MSC	194-185
MC6118,A	MSC	197-144
MC6119,A	MSC	199-136
MC6120,A	MSC	202- 51
MC6121,A	MSC	205- 5
MC6122,A	MSC	206-164
MC6123,A	MSC	208-154
MC6124,A	MSC	211- 46
MC6125,A	MSC	213- 54
MC6126,A	MSC	215- 18
MC6127,A	MSC	216-131
MC6128,A	MSC	218- 28
MC6129,A	MSC	219-109
MC6130,A	MSC	221- 43
MC6308,A	MSC	175- 84
MC6309,A	MSC	176-148
MC6310,A	MSC	178- 55
MC6311,A	MSC	180- 97
MC6312,A	MSC	182-150
MC6313,A	MSC	186- 79
MC6314,A	MSC	188-167
MC6315,A	MSC	190-150
MC6316,A	MSC	193- 60
MC6317,A	MSC	195- 89
MC6318,A	MSC	198- 62
MC6319,A	MSC	200- 38
MC6320,A	MSC	202-153
MC6321,A	MSC	205- 93
MC6322,A	MSC	207- 78
MC6323,A	MSC	209- 56
MC6324,A	MSC	211-144
MC6325,A	MSC	213-139
MC6326,A	MSC	215-108
MC6327,A	MSC	217- 15
MC6328,A	MSC	218- 96
MC6329,A	MSC	219-173
MC6330,A	MSC	221-118
MC6400A	♦ MSC	175-130
MC6400B	♦ MSC	175-131
MC6400C	♦ MSC	175-150
MC6401A	♦ MSC	175-132
MC6401B	♦ MSC	175-133
MC6401C	♦ MSC	175-151
MC6402A	♦ MSC	175-134
MC6402B	♦ MSC	175-135
MC6402C	♦ MSC	175-152
MC6403A	♦ MSC	175-136
MC6403B	♦ MSC	175-137
MC6403C	♦ MSC	175-153
MC6404A	♦ MSC	175-138
MC6404B	♦ MSC	175-139
MC6404C	♦ MSC	175-154
MC6405A	♦ MSC	175-140
MC6405B	♦ MSC	175-141
MC6405C	♦ MSC	175-155
MC6406A	♦ MSC	175-142
MC6406B	♦ MSC	175-143
MC6406C	♦ MSC	175-156
MC6407A	♦ MSC	175-144
MC6407B	♦ MSC	175-145
MC6407C	♦ MSC	175-157
MC6408A	♦ MSC	181- 9
MC6408B	♦ MSC	181- 10
MC6408C	♦ MSC	181- 29
MC6409A	♦ MSC	181- 11
MC6409B	♦ MSC	181- 12
MC6409C	♦ MSC	181- 30
MC6410A	♦ MSC	181- 13
MC6410B	♦ MSC	181- 14
MC6410C	♦ MSC	181- 31
MC6411A	♦ MSC	181- 15
MC6411B	♦ MSC	181- 16
MC6411C	♦ MSC	181- 32
MC6412A	♦ MSC	181- 17
MC6412B	♦ MSC	181- 18
MC6412C	♦ MSC	181- 33
MC6413A	♦ MSC	181- 19
MC6413B	♦ MSC	181- 20
MC6413C	♦ MSC	181- 34
MC6414A	♦ MSC	181- 21
MC6414B	♦ MSC	181- 22
MC6414C	♦ MSC	181- 35
MC6415A	♦ MSC	181- 23
MC6415B	♦ MSC	181- 24
MC6415C	♦ MSC	181- 36
MC6416A	♦ MSC	184- 18
MC6416B	♦ MSC	184- 19
MC6416C	♦ MSC	184- 39
MC6417A	♦ MSC	184- 20
MC6417B	♦ MSC	184- 21
MC6417C	♦ MSC	184- 40
MC6418A	♦ MSC	184- 22
MC6418B	♦ MSC	184- 23
MC6418C	♦ MSC	184- 41
MC6419A	♦ MSC	184- 24
MC6419B	♦ MSC	184- 25
MC6419C	♦ MSC	184- 42
MC6420A	♦ MSC	184- 26
MC6420B	♦ MSC	184- 27
MC6420C	♦ MSC	184- 43
MC6421A	♦ MSC	184- 28
MC6421B	♦ MSC	184- 29
MC6421C	♦ MSC	184- 44
MC6422A	♦ MSC	184- 30
MC6422B	♦ MSC	184- 31

TYPE No.	MFRS	Pg&Line
MC6422C	♦ MSC	184- 45
MC6423A	♦ MSC	184- 32
MC6423B	♦ MSC	184- 33
MC6423C	♦ MSC	184- 46
MC6424A	♦ MSC	175-146
MC6424B	♦ MSC	175-147
MC6424C	♦ MSC	175-158
MC6425A	♦ MSC	175-148
MC6425B	♦ MSC	175-149
MC6425C	♦ MSC	175-159
MC6426A	♦ MSC	181- 25
MC6426B	♦ MSC	181- 26
MC6426C	♦ MSC	181- 37
MC6427A	♦ MSC	181- 27
MC6427B	♦ MSC	181- 28
MC6427C	♦ MSC	181- 38
MC6428A	♦ MSC	184- 34
MC6428B	♦ MSC	184- 35
MC6428C	♦ MSC	184- 47
MC6429A	♦ MSC	184- 36
MC6429B	♦ MSC	184- 37
MC6429C	♦ MSC	184- 48
MC7000	MSC	277- 4
MC7001-1	♦ MSC	271- 74
MC7001-2	♦ MSC	271- 75
MC7002-1	♦ MSC	271- 60
MC7002-2	♦ MSC	271- 61
MC7003-1	♦ MSC	271- 62
MC7003-2	♦ MSC	271- 63
MC7004-1	♦ MSC	271- 76
MC7004-2	♦ MSC	271- 77
MC7005-1	♦ MSC	271- 64
MC7005-2	♦ MSC	271- 65
MC7006-1	♦ MSC	271- 66
MC7006-2	♦ MSC	271- 67
MC7007-1	♦ MSC	271- 68
MC7007-2	♦ MSC	271- 69
MC7008-1	♦ MSC	271- 37
MC7008-2	♦ MSC	271- 38
MC7009-1	♦ MSC	271- 39
MC7009-2	♦ MSC	271- 40
MCCZA6 8D,10,5	DIC	177- 83
MCCZA7.5D,10,5	DIC	179-132
MCCZA8 2D,10,5	DIC	181-189
MCCZA9.1D,10,5	DIC	185-112
MCCZA10D,10,5	DIC	187-186
MCCZA11D,10,5	DIC	190- 12
MCCZA12D,10,5	DIC	192- 65
MCCZA13D,10,5	DIC	194-138
MCCZA14D,10,5	DIC	196- 50
MCCZA15D,10,5	DIC	197- 89
MCCZA16D,10,5	DIC	199- 89
MCCZA17D,10,5	DIC	201- 3
MCCZA18D,10,5	DIC	201-173
MCCZA19D,10,5	DIC	203-138
MCCZA20D,10,5	DIC	204-142
MCCZA22D,10,5	DIC	206-111
MCCZA24D,10,5	DIC	208-107
MCCZA25D,10,5	DIC	210- 13
MCCZA27D,10,5	DIC	210-166
MCCZA28D,10,5	DIC	212-106
MCCZA30D,10,5	DIC	213- 13
MCCZA33D,10,5	DIC	214-155
MCCZA36D,10,5	DIC	216-101
MCCZA39D,10,5	DIC	217-174
MCCZA43D,10,5	DIC	219- 79
MCCZA47D,10,5	DIC	221- 9
MCCZA51D,10,5	DIC	222-153
MCCZA56D,10,5	DIC	224- 45
MCCZA60D,10,5	DIC	225-108
MCCZA62D,10,5	DIC	226- 2
MCCZA68D,10,5	DIC	227- 54
MCCZA75D,10,5	DIC	228-154
MCCZA82D,10,5	DIC	230- 49
MCCZA87D,10,5	DIC	231- 84
MCCZA91D,10,5	DIC	231-172
MCCZA100D,10,5	DIC	233- 28
MCCZA105D,10,5	DIC	234- 81
MCCZA110D,10,5	DIC	235- 6
MCCZA120D,10,5	DIC	236- 26
MCCZA130D,10,5	DIC	237- 69
MCCZA140D,10,5	DIC	238- 81
MCCZA150D,10,5	DIC	239- 40
MCCZA160D,10,5	DIC	240- 74
MCCZA175D,10,5	DIC	241-101
MCCZA180D,10,5	DIC	242- 8
MCCZA200D,10,5	DIC	243- 51
MCCZB6.8D,10,5	DIC	177- 84
MCCZB7 5D,10,5	DIC	179-133
MCCZB8 2D,10,5	DIC	181-190
MCCZB9.1D,10,5	DIC	185-113
MCCZB10D,10,5	DIC	187-187
MCCZB11D,10,5	DIC	190- 13
MCCZB12D,10,5	DIC	192- 66
MCCZB13D,10,5	DIC	194-139

TYPE No.	MFRS	Pg&Line
MCCZB14D,10,5	DIC	196- 51
MCCZB15D,10,5	DIC	197- 90
MCCZB16D,10,5	DIC	199- 90
MCCZB17D,10,5	DIC	201- 4
MCCZB18D,10,5	DIC	201-174
MCCZB19D,10,5	DIC	203-139
MCCZB20D,10,5	DIC	204-143
MCCZB22D,10,5	DIC	206-112
MCCZB24D,10,5	DIC	208-108
MCCZB25D,10,5	DIC	210- 14
MCCZB27D,10,5	DIC	210-167
MCCZB30D,10,5	DIC	213- 14
MCCZB33D,10,5	DIC	214-156
MCCZB36D,10,5	DIC	216-102
MCCZB39D,10,5	DIC	217-175
MCCZB43D,10,5	DIC	219- 80
MCCZB47D,10,5	DIC	221- 10
MCCZB51D,10,5	DIC	222-154
MCCZB56D,10,5	DIC	224- 46
MCCZB62D,10,5	DIC	226- 3
MCCZB68D,10,5	DIC	227- 55
MCCZB75D,10,5	DIC	228-155
MCCZB82D,10,5	DIC	230- 50
MCCZB91D,10,5	DIC	231-173
MCCZB100D,10,5	DIC	233- 29
MCCZB105D,10,5	DIC	234- 82
MCCZB110D,10,5	DIC	235- 7
MCCZB120D,10,5	DIC	236- 27
MCCZB130D,10,5	DIC	237- 70
MCCZB140D,10,5	DIC	238- 82
MCCZB150D,10,5	DIC	239- 41
MCCZB160D,10,5	DIC	240- 75
MCCZB175D,10,5	DIC	241-102
MCCZB180D,10,5	DIC	242- 9
MCCZB200D,10,5	DIC	243- 52
MCCZC6.8D,10,5	DIC	177- 85
MCCZC7 5D,10,5	DIC	179-134
MCCZC8 2D,10,5	DIC	181-191
MCCZC9.1D,10,5	DIC	185-114
MCCZC10D,10,5	DIC	187-188
MCCZC11D,10,5	DIC	190- 14
MCCZC12D,10,5	DIC	192- 67
MCCZC13D,10,5	DIC	194-140
MCCZC14D,10,5	DIC	196- 52
MCCZC15D,10,5	DIC	197- 91
MCCZC16D,10,5	DIC	199- 91
MCCZC17D,10,5	DIC	201- 5
MCCZC18D,10,5	DIC	201-175
MCCZC19D,10,5	DIC	203-140
MCCZC20D,10,5	DIC	204-144
MCCZC22D,10,5	DIC	206-113
MCCZC24D,10,5	DIC	208-109
MCCZC25D,10,5	DIC	210- 15
MCCZC27D,10,5	DIC	210-168
MCCZC30D,10,5	DIC	213- 15
MCCZC33D,10,5	DIC	214-157
MCCZC36D,10,5	DIC	216-103
MCCZC39D,10,5	DIC	217-176
MCCZC43D,10,5	DIC	219- 81
MCCZC47D,10,5	DIC	221- 11
MCCZC51D,10,5	DIC	222-155
MCCZC56D,10,5	DIC	224- 47
MCCZC62D,10,5	DIC	226- 4
MCCZC68D,10,5	DIC	227- 56
MCCZC75D,10,5	DIC	228-156
MCCZC82D,10,5	DIC	230- 51
MCCZC91D,10,5	DIC	231-174
MCCZC100D,10,5	DIC	233- 30
MCCZC105D,10,5	DIC	234- 83
MCCZC110D,10,5	DIC	235- 8
MCCZC120D,10,5	DIC	236- 28
MCCZC130D,10,5	DIC	237- 71
MCCZC140D,10,5	DIC	238- 83
MCCZC150D,10,5	DIC	239- 42
MCCZC160D,10,5	DIC	240- 76
MCCZC175D,10,5	DIC	241-103
MCCZC180D,10,5	DIC	242- 10
MCCZC200D,10,5	DIC	243- 53
MCCZD6.8D,10,5	DIC	177- 86
MCCZD7.5D,10,5	DIC	179-135
MCCZD8.2D,10,5	DIC	182- 1
MCCZD9.1D,10,5	DIC	185-115
MCCZD10D,10,5	DIC	187-189
MCCZD11D,10,5	DIC	190- 15

TYPE No.	MFRS	Pg&Line
MCCZD12D,10,5	DIC	192- 68
MCCZD13D,10,5	DIC	194-141
MCCZD14D,10,5	DIC	196- 53
MCCZD15D,10,5	DIC	197- 92
MCCZD16D,10,5	DIC	199- 92
MCCZD17D,10,5	DIC	201- 6
MCCZD18D,10,5	DIC	201-176
MCCZD19D,10,5	DIC	203-141
MCCZD20D,10,5	DIC	204-145
MCCZD22D,10,5	DIC	206-114
MCCZD24D,10,5	DIC	208-110
MCCZD25D,10,5	DIC	210- 16
MCCZD27D,10,5	DIC	211- 1
MCCZD28D,10,5	DIC	212-107
MCCZD30D,10,5	DIC	213- 16
MCCZD33D,10,5	DIC	214-158
MCCZD36D,10,5	DIC	216-104
MCCZD39D,10,5	DIC	217-177
MCCZD43D,10,5	DIC	219- 82
MCCZD47D,10,5	DIC	221- 12
MCCZD51D,10,5	DIC	222-156
MCCZD56D,10,5	DIC	224- 48
MCCZD60D,10,5	DIC	225-109
MCCZD62D,10,5	DIC	226- 5
MCCZD68D,10,5	DIC	227- 57
MCCZD75D,10,5	DIC	228-157
MCCZD82D,10,5	DIC	230- 52
MCCZD87D,10,5	DIC	231- 85
MCCZD91D,10,5	DIC	231-175
MCCZD100D,10,5	DIC	233- 31
MCCZD105D,10,5	DIC	234- 84
MCCZD110D,10,5	DIC	235- 9
MCCZD120D,10,5	DIC	236- 29
MCCZD130D,10,5	DIC	237- 72
MCCZD140D,10,5	DIC	238- 84
MCCZD150D,10,5	DIC	239- 43
MCCZD160D,10,5	DIC	240- 77
MCCZD175D,10,5	DIC	241-104
MCCZD180D,10,5	DIC	242- 11
MCCZD200D,10,5	DIC	243- 54
MCCZE6 8D,10,5	DIC	177- 87
MCCZE7 5D,10,5	DIC	179-136
MCCZE8 2D,10,5	DIC	182- 2
MCCZE9 1D,10,5	DIC	185-116
MCCZE10D,10,5	DIC	187-190
MCCZE11D,10,5	DIC	190- 16
MCCZE12D,10,5	DIC	192- 69
MCCZE13D,10,5	DIC	194-142
MCCZE14D,10,5	DIC	196- 54
MCCZE15D,10,5	DIC	197- 93
MCCZE16D,10,5	DIC	199- 93
MCCZE17D,10,5	DIC	201- 7
MCCZE18D,10,5	DIC	201-177
MCCZE19D,10,5	DIC	203-142
MCCZE20D,10,5	DIC	204-146
MCCZE22D,10,5	DIC	206-115
MCCZE24D,10,5	DIC	208-111
MCCZE25D,10,5	DIC	210- 17
MCCZE27D,10,5	DIC	211- 2
MCCZE30D,10,5	DIC	213- 17
MCCZE33D,10,5	DIC	214-159
MCCZE36D,10,5	DIC	216-105
MCCZE39D,10,5	DIC	217-178
MCCZE43D,10,5	DIC	219- 83
MCCZE47D,10,5	DIC	221- 13
MCCZE51D,10,5	DIC	222-157
MCCZE56D,10,5	DIC	224- 49
MCCZE62D,10,5	DIC	226- 6
MCCZE68D,10,5	DIC	227- 58
MCCZE75D,10,5	DIC	228-158
MCCZE82D,10,5	DIC	230- 53
MCCZE91D,10,5	DIC	231-176
MCCZE100D,10,5	DIC	233- 32
MCCZE105D,10,5	DIC	234- 85
MCCZE110D,10,5	DIC	235- 10
MCCZE120D,10,5	DIC	236- 30
MCCZE130D,10,5	DIC	237- 73
MCCZE140D,10,5	DIC	238- 85
MCCZE150D,10,5	DIC	239- 44
MCCZE160D,10,5	DIC	240- 78
MCCZE175D,10,5	DIC	241-105
MCCZE180D,10,5	DIC	242- 12
MCCZE200D,10,5	DIC	243- 55
MCCZF1 8D,10,5	DIC	165- 97
MCCZF2 0D,10,5	DIC	165-119

Δ-Registered with JEDEC by this manufacturer

♦-Copy of mfr's data sheet may be ordered from D.A.T.A.

1. TYPE No. CROSS INDEX

IN TYPE NUMBER SEQUENCE

TYPE No.	MFRS	Pg&Line
MCCZF2.2D,10,5	DIC	165-139
MCCZF2 4D,10,5	DIC	165-170
MCCZF2.7D,10,5	DIC	166- 40
MCCZF3 0D,10,5	DIC	166-115
MCCZF3 3D,10,5	DIC	167- 13
MCCZF3 6D,10,5	DIC	167-163
MCCZF3 9D,10,5	DIC	166-116
MCCZF4 3D,10,5	DIC	169-115
MCCZF4 7D,10,5	DIC	170-114
MCCZF5 1D,10,5	DIC	171-160
MCCZF5 6D,10,5	DIC	173- 2
MCCZF6 2D,10,5	DIC	174-195
MCCZF6 8D,10,5	DIC	177- 88
MCCZF7 5D,10,5	DIC	179-137
MCCZF8 2D,10,5	DIC	182- 3
MCCZF9 1D,10,5	DIC	185-117
MCCZF10D,10,5	DIC	188- 1
MCCZF12D,10,5	DIC	192- 70
MCCZG2 4D,10,5	DIC	165-171
MCCZG2.7D,10,5	DIC	166- 41
MCCZG3 0D,10,5	DIC	166-117
MCCZG3 3D,10,5	DIC	167- 14
MCCZG3 6D,10,5	DIC	167-164
MCCZG3 9D,10,5	DIC	168-116
MCCZG4 3D,10,5	DIC	169-116
MCCZG4 7D,10,5	DIC	170-115
MCCZG5 1D,10,5	DIC	171-161
MCCZG5 6D,10,5	DIC	173- 3
MCCZG6 2D,10,5	DIC	174-196
MCCZG6 8D,10,5	DIC	177- 89
MCCZG7 5D,10,5	DIC	179-138
MCCZG8 2D,10,5	DIC	182- 4
MCCZG9 1D,10,5	DIC	185-118
MCCZG10D,10,5	DIC	188- 2
MCCZG12D,10,5	DIC	192- 71
MCL1300	♦MOTA	600- 71
MCL1301	♦MOTA	600- 72
MCL1302	♦MOTA	600- 73
MCL1303	♦MOTA	600- 74
MCL1304	♦MOTA	600- 75
MCP1	♦CITF	302- 56
MCP2	♦CITF	313- 62
MCP4	♦CITF	332- 48
MCP05	♦CITF	295- 30
MCP6	♦CITF	349- 68
MCP8	♦CITF	362- 19
MCP10	♦CITF	372- 43
MCPD520A	♦MSC	275- 10
MCPD520B	♦MSC	275- 11
MCPD520C	♦MSC	275- 12
MCPD521A	♦MSC	273- 31
MCPD521B	♦MSC	273- 32
MCPD521C	♦MSC	273- 33
MCPD522A	♦MSC	267- 68
MCPD522B	♦MSC	267- 69
MCPD522C	♦MSC	267- 70
MCPD523A	♦MSC	277- 82
MCPD523B	♦MSC	277- 83
MCPD523C	♦MSC	277- 84
MCPD524A	♦MSC	268- 67
MCPD524B	♦MSC	268- 68
MCPD524C	♦MSC	268- 69
MCPD525A	♦MSC	271- 41
MCPD525B	♦MSC	271- 42
MCPD525C	♦MSC	271- 43
MCPD526A	♦MSC	271- 7
MCPD526B	♦MSC	271- 8
MCPD526C	♦MSC	271- 9
MCPD527A	♦MSC	248- 12
MCPD527B	♦MSC	248- 13
MCPD527C	♦MSC	248- 14
MCPD528A	♦MSC	255- 77
MCPD528B	♦MSC	255- 78
MCPD528C	♦MSC	255- 79
MCPD529A	♦MSC	256- 19
MCPD529B	♦MSC	256- 20
MCPD529C	♦MSC	256- 21
MCPD530A	♦MSC	254- 12
MCPD530B	♦MSC	254- 13
MCPD530C	♦MSC	254- 14
MCPD531A	♦MSC	258- 83
MCPD531B	♦MSC	258- 84
MCPD531C	♦MSC	258- 85

TYPE No.	MFRS	Pg&Line
MCPD532A	♦MSC	259- 96
MCPD532B	♦MSC	259- 97
MCPD532C	♦MSC	259- 98
MCPD533A	♦MSC	172-124
MCPD533B	♦MSC	173- 41
MCPD533C	♦MSC	173- 42
MCPD534A	♦MSC	176-127
MCPD534B	♦MSC	176-140
MCPD534C	♦MSC	176-141
MCPD535A	♦MSC	179- 56
MCPD535B	♦MSC	179-160
MCPD535C	♦MSC	179-161
MCPD536A	♦MSC	185- 37
MCPD536B	♦MSC	185-139
MCPD536C	♦MSC	185-140
MCPD537A	♦MSC	191-190
MCPD537B	♦MSC	192- 98
MCPD537C	♦MSC	192- 99
MCR101	♦MOTA	414- 39
MCR102	♦MOTA	416- 76
MCR103	♦MOTA	422- 17
MCR104	♦MOTA	423- 81
MCR106-1	♦MOTA	417- 19
MCR106-2	♦MOTA	422- 47
MCR106-3	♦MOTA	424- 75
MCR106-4	♦MOTA	433- 86
MCR115	♦MOTA	430- 35
MCR120	♦MOTA	432- 79
MCR406-1	♦MOTA	417- 33
MCR406-2	♦MOTA	422- 49
MCR406-3	♦MOTA	424- 91
MCR406-4	♦MOTA	433-102
MCR407-1	♦MOTA	417- 32
MCR407-2	♦MOTA	422- 48
MCR407-3	♦MOTA	424- 90
MCR407-4	♦MOTA	433-101
MCR649-1	♦MOTA	415- 55
MCR649-2	♦MOTA	420- 22
MCR649-3	♦MOTA	427- 14
MCR649-4	♦MOTA	436- 54
MCR649-5	♦MOTA	444- 81
MCR649-6	♦MOTA	452- 48
MCR649-7	♦MOTA	459- 16
MCR729-5	♦MOTA	442- 94
MCR729-6	♦MOTA	449- 57
MCR729-7	♦MOTA	457- 38
MCR729-8	♦MOTA	463- 8
MCR729-9	♦MOTA	470- 81
MCR729-10	♦MOTA	474- 7
MCR846-1	MOTA	414- 97
MCR846-2	MOTA	418- 44
MCR846-3	MOTA	424- 51
MCR846-4	MOTA	433- 51
MCR914-1	MOTA	414- 88
MCR914-2	MOTA	418- 26
MCR914-3	MOTA	424- 27
MCR914-4	MOTA	433- 28
MCR914-5	MOTA	442- 80
MCR914-6	MOTA	449- 40
MCR1336-5	MOTA	421- 36
MCR1336-6	MOTA	421- 37
MCR1336-7	MOTA	421- 38
MCR1336-8	MOTA	421- 39
MCR1336-9	MOTA	421- 40
MCR1336-10	MOTA	421- 41
MCR1718-5	♦MOTA	444-101
MCR1718-6	♦MOTA	452- 82
MCR1718-7	♦MOTA	459- 43
MCR1718-8	♦MOTA	465- 94
MCR1906-1	♦MOTA	414- 94
MCR1906-2	♦MOTA	418- 34
MCR1906-3	♦MOTA	424- 38
MCR1906-4	♦MOTA	433- 39
MCR1907-1	♦MOTA	415- 65
MCR1907-2	♦MOTA	420- 47
MCR1907-3	♦MOTA	427- 67
MCR1907-4	♦MOTA	436-108
MCR1907-5	♦MOTA	445- 10
MCR1907-6	♦MOTA	452-105
MCR2315-1	♦MOTA	415- 24
MCR2315-2	♦MOTA	419- 52
MCR2315-3	♦MOTA	425- 90
MCR2315-4	♦MOTA	435- 8
MCR2315-5	♦MOTA	443- 81
MCR2315-6	♦MOTA	451- 4
MCR2604-1	MOTA	415- 26
MCR2604-2	MOTA	419- 57
MCR2604-3	MOTA	425-101
MCR2604-4	MOTA	435- 20
MCR2604-5	MOTA	443- 92
MCR2604-6	MOTA	451- 19
MCR2604-7	MOTA	457- 70
MCR2604-8	MOTA	463- 55
MCR2605-1	MOTA	415- 27
MCR2605-2	MOTA	419- 58
MCR2605-3	MOTA	425-102
MCR2605-4	MOTA	435- 21
MCR2605-5	MOTA	443- 93
MCR2605-6	MOTA	451- 20
MCR2605-7	MOTA	457- 71
MCR2605-8	MOTA	463- 56
MCR2614L1	♦MOTA	415- 25
MCR2614L2	♦MOTA	419- 53
MCR2614L3	♦MOTA	425- 91
MCR2614L4	♦MOTA	435- 9
MCR2614L5	♦MOTA	443- 82
MCR2614L6	♦MOTA	451- 5
MCR3818-1	♦MOTA	415- 47
MCR3818-2	♦MOTA	420- 10
MCR3818-3	♦MOTA	426-103
MCR3818-4	♦MOTA	436- 31
MCR3818-5	♦MOTA	444- 62
MCR3818-6	♦MOTA	452- 23
MCR3818-7	♦MOTA	458-104

TYPE No.	MFRS	Pg&Line
MCR3818-8	♦MOTA	465- 34
MCR3835-1	♦MOTA	415- 69
MCR3835-2	♦MOTA	420- 56
MCR3835-3	♦MOTA	427- 83
MCR3835-4	♦MOTA	437- 14
MCR3835-5	♦MOTA	445- 25
MCR3835-6	♦MOTA	453- 13
MCR3835-7	♦MOTA	459- 78
MCR3835-8	♦MOTA	466- 20
MCR3918-1	♦MOTA	415- 48
MCR3918-2	♦MOTA	420- 11
MCR3918-3	♦MOTA	426-104
MCR3918-4	♦MOTA	436- 32
MCR3918-5	♦MOTA	444- 63
MCR3918-6	♦MOTA	452- 24
MCR3918-7	♦MOTA	458-105
MCR3918-8	♦MOTA	465- 35
MCR3935-1	♦MOTA	415- 70
MCR3935-2	♦MOTA	420- 57
MCR3935-3	♦MOTA	427- 84
MCR3935-4	♦MOTA	437- 15
MCR3935-5	♦MOTA	445- 26
MCR3935-6	♦MOTA	453- 14
MCR3935-7	♦MOTA	459- 79
MCR3935-8	♦MOTA	466- 21
MCS31	SOIF	248- 3
MCS35	SOIF	248- 19
MCS101	SOIF	253- 91
MCS105	SOIF	253-103
MCV	SOD	292- 21
MD1	SOIF	165- 11
MD1D914	♦DIC	277- 85
MD1D914A	♦DIC	277- 86
MD1D914B	♦DIC	277- 87
MD2	SOIF	165- 50
MD2D914	♦DIC	277- 88
MD2D914A	♦DIC	277- 89
MD2D914B	♦DIC	277- 90
MD3	SOIF	165- 86
MD04	GIC	249- 7
MD4	SOIF	165-145
MD06	GIC	273- 95
MD08	GIC	276- 51
MD10△	GIC	279- 63
MD34	MITJ	252- 37
MD60	MITJ	249- 3
MD60A	MITJ	249- 5
MD90	♦TIIB	600- 76
MD100△	♦TIIB	600- 77
MD101	♦TIIB	600- 78
MD102	♦TIIB	600- 79
MD134	MITJ	249- 23
MD135	MITJ	251- 30
MD136	MITJ	255- 11
MD137	MITJ	258- 20
MD138	MITJ	259- 39
MD0189	TIIB	514- 32
MD0190	TIIB	514- 33
MD0191	TIIB	514- 34
MD0219	TIIB	516- 31
MD0220	TIIB	516- 32
MD0221	TIIB	516- 33
MD0232	♦TIIB	595- 32
MD0233	♦TIIB	595- 33
MD0234	♦TIIB	595- 34
MD0235	♦TIIB	595- 35
MD431A	♦MDC	586- 30
MD431B	♦MDC	586- 31
MD431C	♦MDC	586- 32
MD432A	♦MDC	586- 33
MD432B	♦MDC	586- 34
MD432C	♦MDC	586- 35
MD433A	♦MDC	586- 36
MD433B	♦MDC	586- 37
MD433C	♦MDC	586- 38
MD434A	♦MDC	586- 39
MD434B	♦MDC	586- 40
MD434C	♦MDC	586- 41
MD435A	♦MDC	586- 42
MD435B	♦MDC	586- 43
MD435C	♦MDC	586- 44
MD436A	♦MDC	586- 45
MD436B	♦MDC	586- 46
MD436C	♦MDC	586- 47
MD437A	♦MDC	586- 48
MD437B	♦MDC	586- 49
MD437C	♦MDC	586- 50
MD438A	♦MDC	586- 51
MD438B	♦MDC	586- 52
MD438C	♦MDC	586- 53
MD439A	♦MDC	586- 54
MD439B	♦MDC	586- 55
MD439C	♦MDC	586- 56
MD440A	♦MDC	586- 57
MD440B	♦MDC	586- 58
MD440C	♦MDC	586- 59
MD441A	♦MDC	586- 60
MD441B	♦MDC	586- 61
MD441C	♦MDC	586- 62
MD442A	♦MDC	586- 63
MD442B	♦MDC	586- 64
MD442C	♦MDC	586- 65
MD443A	♦MDC	586- 66
MD443B	♦MDC	586- 67
MD443C	♦MDC	586- 68
MD444A	♦MDC	586- 69
MD444B	♦MDC	586- 70
MD444C	♦MDC	586- 71
MD445A	♦MDC	586- 72
MD445B	♦MDC	586- 73
MD445C	♦MDC	586- 74
MD446A	♦MDC	586- 75
MD446B	♦MDC	586- 76
MD446C	♦MDC	586- 77

TYPE No.	MFRS	Pg&Line
MD447A	♦MDC	586- 78
MD447B	♦MDC	586- 79
MD447C	♦MDC	586- 80
MD448A	♦MDC	586- 81
MD448B	♦MDC	586- 82
MD448C	♦MDC	586- 83
MD449A	♦MDC	586- 84
MD449B	♦MDC	586- 85
MD449C	♦MDC	586- 86
MD450A	♦MDC	586- 87
MD450B	♦MDC	586- 88
MD450C	♦MDC	586- 89
MD451A	♦MDC	586- 90
MD451B	♦MDC	586- 91
MD451C	♦MDC	586- 92
MD452A	♦MDC	586- 93
MD452B	♦MDC	586- 94
MD452C	♦MDC	586- 95
MD632	♦MDC	595- 36
MDA922-1	♦MOTA	292- 46
MDA922-2	♦MOTA	295- 7
MDA922-3	♦MOTA	302- 27
MDA922-4	♦MOTA	313- 28
MDA922-5	♦MOTA	322- 89
MDA922-6	♦MOTA	332- 15
MDA922-7	♦MOTA	349- 35
MDA922-8	♦MOTA	361-101
MDA922-9	♦MOTA	372- 18
MDCZA6 8D,10,5	DIC	177- 90
MDCZA7 5D,10,5	DIC	179-139
MDCZA8 2D,10,5	DIC	182- 5
MDCZA9.1D,10,5	DIC	185-119
MDCZA10D,10,5	DIC	188- 3
MDCZA11D,10,5	DIC	190- 17
MDCZA12D,10,5	DIC	192- 72
MDCZA13D,10,5	DIC	194-143
MDCZA14D,10,5	DIC	196- 55
MDCZA15D,10,5	DIC	197- 94
MDCZA16D,10,5	DIC	199- 94
MDCZA17D,10,5	DIC	201- 8
MDCZA18D,10,5	DIC	202- 1
MDCZA19D,10,5	DIC	203-143
MDCZA20D,10,5	DIC	204-147
MDCZA22D,10,5	DIC	206-116
MDCZA24D,10,5	DIC	208-112
MDCZA25D,10,5	DIC	210- 18
MDCZA27D,10,5	DIC	211- 3
MDCZA28D,10,5	DIC	212-108
MDCZA30D,10,5	DIC	213- 18
MDCZA33D,10,5	DIC	214-160
MDCZA36D,10,5	DIC	216-106
MDCZA39D,10,5	DIC	217-179
MDCZA43D,10,5	DIC	219- 84
MDCZA47D,10,5	DIC	221- 14
MDCZA51D,10,5	DIC	222-158
MDCZA56D,10,5	DIC	224- 50
MDCZA60D,10,5	DIC	225-110
MDCZA62D,10,5	DIC	226- 7
MDCZA68D,10,5	DIC	227- 59
MDCZA75D,10,5	DIC	228-159
MDCZA82D,10,5	DIC	230- 54
MDCZA87D,10,5	DIC	231- 86
MDCZA91D,10,5	DIC	232- 1
MDCZA100D,10,5	DIC	233- 33
MDCZA105D,10,5	DIC	234- 86
MDCZA110D,10,5	DIC	235- 11
MDCZA120D,10,5	DIC	236- 31
MDCZA130D,10,5	DIC	237- 74
MDCZA140D,10,5	DIC	238- 86
MDCZA150D,10,5	DIC	239- 45
MDCZA160D,10,5	DIC	240- 79
MDCZA175D,10,5	DIC	241-106
MDCZA180D,10,5	DIC	242- 13
MDCZA200D,10,5	DIC	243- 56
MDCZB6 8D,10,5	DIC	177- 91
MDCZB7.5D,10,5	DIC	179-140
MDCZB8.2D,10,5	DIC	182- 6
MDCZB9 1D,10,5	DIC	185-120
MDCZB10D,10,5	DIC	188- 4
MDCZB11D,10,5	DIC	190- 18
MDCZB12D,10,5	DIC	192- 73
MDCZB13D,10,5	DIC	194-144
MDCZB14D,10,5	DIC	196- 56
MDCZB15D,10,5	DIC	197- 95
MDCZB16D,10,5	DIC	199- 95
MDCZB17D,10,5	DIC	201- 9
MDCZB18D,10,5	DIC	202- 2
MDCZB19D,10,5	DIC	203-144
MDCZB20D,10,5	DIC	204-148
MDCZB22D,10,5	DIC	206-117
MDCZB24D,10,5	DIC	208-113
MDCZB25D,10,5	DIC	210- 19
MDCZB27D,10,5	DIC	211- 4
MDCZB30D,10,5	DIC	213- 19
MDCZB33D,10,5	DIC	214-161

TYPE No.	MFRS	Pg&Line
MDCZB36D,10,5	DIC	216-107
MDCZB39D,10,5	DIC	217-180
MDCZB43D,10,5	DIC	219- 85
MDCZB47D,10,5	DIC	221- 15
MDCZB51D,10,5	DIC	222-159
MDCZB56D,10,5	DIC	224- 51
MDCZB62D,10,5	DIC	226- 8
MDCZB68D,10,5	DIC	227- 60
MDCZB75D,10,5	DIC	228-160
MDCZB82D,10,5	DIC	230- 55
MDCZB91D,10,5	DIC	232- 2
MDCZB100D,10,5	DIC	233- 34
MDCZB105D,10,5	DIC	234- 87
MDCZB110D,10,5	DIC	235- 12
MDCZB120D,10,5	DIC	236- 32
MDCZB130D,10,5	DIC	237- 75
MDCZB140D,10,5	DIC	238- 87
MDCZB150D,10,5	DIC	239- 46
MDCZB160D,10,5	DIC	240- 80
MDCZB175D,10,5	DIC	241-107
MDCZB180D,10,5	DIC	242- 14
MDCZB200D,10,5	DIC	243- 57
MDCZC6 8D,10,5	DIC	177- 92
MDCZC7 5D,10,5	DIC	179-141
MDCZC8 2D,10,5	DIC	182- 7
MDCZC9 1D,10,5	DIC	185-121
MDCZC10D,10,5	DIC	188- 5
MDCZC11D,10,5	DIC	190- 19
MDCZC12D,10,5	DIC	192- 74
MDCZC13D,10,5	DIC	194-145
MDCZC14D,10,5	DIC	196- 57
MDCZC15D,10,5	DIC	197- 96
MDCZC16D,10,5	DIC	199- 96
MDCZC17D,10,5	DIC	201- 10
MDCZC18D,10,5	DIC	202- 3
MDCZC19D,10,5	DIC	203-145
MDCZC20D,10,5	DIC	204-149
MDCZC22D,10,5	DIC	206-118
MDCZC24D,10,5	DIC	208-114
MDCZC25D,10,5	DIC	210- 20
MDCZC27D,10,5	DIC	211- 5
MDCZC30D,10,5	DIC	213- 20
MDCZC33D,10,5	DIC	214-162
MDCZC36D,10,5	DIC	216-108
MDCZC39D,10,5	DIC	218- 1
MDCZC43D,10,5	DIC	219- 86
MDCZC47D,10,5	DIC	221- 16
MDCZC51D,10,5	DIC	222-160
MDCZC56D,10,5	DIC	224- 52
MDCZC62D,10,5	DIC	226- 9
MDCZC68D,10,5	DIC	227- 61
MDCZC75D,10,5	DIC	228-161
MDCZC82D,10,5	DIC	230- 56
MDCZC91D,10,5	DIC	232- 3
MDCZC100D,10,5	DIC	233- 35
MDCZC105D,10,5	DIC	234- 88
MDCZC110D,10,5	DIC	235- 13
MDCZC120D,10,5	DIC	236- 33
MDCZC130D,10,5	DIC	237- 76
MDCZC140D,10,5	DIC	238- 88
MDCZC150D,10,5	DIC	239- 47
MDCZC160D,10,5	DIC	240- 81
MDCZC175D,10,5	DIC	241-108
MDCZC180D,10,5	DIC	242- 15
MDCZC200D,10,5	DIC	243- 58
MDCZD6.8D,10,5	DIC	177- 93
MDCZD7.5D,10,5	DIC	179-142
MDCZD8 2D,10,5	DIC	182- 8
MDCZD9.1D,10,5	DIC	185-122
MDCZD10D,10,5	DIC	188- 6
MDCZD11D,10,5	DIC	190- 20
MDCZD12D,10,5	DIC	192- 75
MDCZD13D,10,5	DIC	194-146
MDCZD14D,10,5	DIC	196- 58
MDCZD15D,10,5	DIC	197- 97
MDCZD16D,10,5	DIC	199- 97
MDCZD17D,10,5	DIC	201- 11
MDCZD18D,10,5	DIC	202- 4
MDCZD19D,10,5	DIC	203-146
MDCZD20D,10,5	DIC	204-150
MDCZD22D,10,5	DIC	206-119
MDCZD24D,10,5	DIC	208-115
MDCZD25D,10,5	DIC	210- 21
MDCZD27D,10,5	DIC	211- 6

△-Registered with JEDEC by this manufacturer

♦-Copy of mfr's data sheet may be ordered from D.A.T.A.

1. TYPE No. CROSS INDEX

IN TYPE NUMBER SEQUENCE

TYPE No.	MFRS	Pg&Line
MDCZD28D,10,5	DIC	212-109
MDCZD30D,10,5	DIC	213- 21
MDCZD33D,10,5	DIC	214-163
MDCZD36D,10,5	DIC	216-109
MDCZD39D,10,5	DIC	218- 2
MDCZD43D,10,5	DIC	219- 87
MDCZD47D,10,5	DIC	221- 17
MDCZD51D,10,5	DIC	222-161
MDCZD56D,10,5	DIC	224- 53
MDCZD60D,10,5	DIC	225-111
MDCZD62D,10,5	DIC	226- 10
MDCZD68D,10,5	DIC	227- 62
MDCZD75D,10,5	DIC	228-162
MDCZD82D,10,5	DIC	230- 57
MDCZD87D,10,5	DIC	231- 87
MDCZD91D,10,5	DIC	232- 4
MDCZD100D,10,5	DIC	233- 36
MDCZD105D,10,5	DIC	234- 89
MDCZD110D,10,5	DIC	235- 14
MDCZD120D,10,5	DIC	236- 34
MDCZD130D,10,5	DIC	237- 77
MDCZD140D,10,5	DIC	238- 89
MDCZD150D,10,5	DIC	239- 48
MDCZD160D,10,5	DIC	240- 82
MDCZD175D,10,5	DIC	241-109
MDCZD180D,10,5	DIC	242- 16
MDCZD200D,10,5	DIC	243- 59
MDCZE6 8D,10,5	DIC	177- 94
MDCZE7.5D,10,5	DIC	179-143
MDCZE8.2D,10,5	DIC	182- 9
MDCZE9 1D,10,5	DIC	185-123
MDCZE10D,10,5	DIC	188- 7
MDCZE11D,10,5	DIC	190- 21
MDCZE12D,10,5	DIC	192- 76
MDCZE13D,10,5	DIC	194-147
MDCZE14D,10,5	DIC	196- 59
MDCZE15D,10,5	DIC	197- 98
MDCZE16D,10,5	DIC	199- 98
MDCZE17D,10,5	DIC	201- 12
MDCZE18D,10,5	DIC	202- 5
MDCZE19D,10,5	DIC	203-147
MDCZE20D,10,5	DIC	204-151
MDCZE22D,10,5	DIC	206-120
MDCZE24D,10,5	DIC	208-116
MDCZE25D,10,5	DIC	210- 22
MDCZE27D,10,5	DIC	211- 7
MDCZE30D,10,5	DIC	213- 22
MDCZE33D,10,5	DIC	214-164
MDCZE36D,10,5	DIC	216-110
MDCZE39D,10,5	DIC	218- 3
MDCZE43D,10,5	DIC	219- 88
MDCZE47D,10,5	DIC	221- 18
MDCZE51D,10,5	DIC	222-162
MDCZE56D,10,5	DIC	224- 54
MDCZE62D,10,5	DIC	226- 11
MDCZE68D,10,5	DIC	227- 63
MDCZE75D,10,5	DIC	228-163
MDCZE82D,10,5	DIC	230- 58
MDCZE91D,10,5	DIC	232- 5
MDCZE100D,10,5	DIC	233- 37
MDCZE105D,10,5	DIC	234- 90
MDCZE110D,10,5	DIC	235- 15
MDCZE120D,10,5	DIC	236- 35
MDCZE130D,10,5	DIC	237- 78
MDCZE140D,10,5	DIC	238- 90
MDCZE150D,10,5	DIC	239- 49
MDCZE160D,10,5	DIC	240- 83
MDCZE175D,10,5	DIC	241-110
MDCZE180D,10,5	DIC	242- 17
MDCZE200D,10,5	DIC	243- 60
MDCZF1 8D,10,5	DIC	165- 98
MDCZF2 0D,10,5	DIC	165-120
MDCZF2 2D,10,5	DIC	165-140
MDCZF2 4D,10,5	DIC	165-172
MDCZF2 7D,10,5	DIC	166- 42
MDCZF3 0D,10,5	DIC	166-118
MDCZF3.3D,10,5	DIC	167- 15
MDCZF3 6D,10,5	DIC	167-165
MDCZF3 9D,10,5	DIC	168-117
MDCZF4.3D,10,5	DIC	169-117
MDCZF4.7D,10,5	DIC	170-116
MDCZF5 1D,10,5	DIC	171-162
MDCZF5 6D,10,5	DIC	173- 4
MDCZF6.2D,10,5	DIC	174-197
MDCZF6.8D,10,5	DIC	177- 95
MDCZF7 5D,10,5	DIC	179-144
MDCZF8.2D,10,5	DIC	182- 10
MDCZF9.1D,10,5	DIC	185-124
MDCZF10D,10,5	DIC	188- 8
MDCZF12D,10,5	DIC	192- 77
MDCZG2 4D,10,5	DIC	165-173
MDCZG2 7D,10,5	DIC	166- 43
MDCZG3.0D,10,5	DIC	166-119
MDCZG3 3D,10,5	DIC	167- 16
MDCZG3 6D,10,5	DIC	167-166
MDCZG3.9D,10,5	DIC	168-118
MDCZG4.3D,10,5	DIC	169-118
MDCZG4.7D,10,5	DIC	170-117
MDCZG5 1D,10,5	DIC	171-163
MDCZG5 6D,10,5	DIC	173- 5
MDCZG6 2D,10,5	DIC	174-198
MDCZG6 8D,10,5	DIC	177- 96
MDCZG7 5D,10,5	DIC	179-145
MDCZG8 2D,10,5	DIC	182- 11
MDCZG9 1D,10,5	DIC	185-125
MDCZG10D,10,5	DIC	188- 9
MDCZG12D,10,5	DIC	192- 78
ME1Z821	DIC	174-199
ME1Z821A	DIC	174-200
ME1Z823	DIC	174-201
ME1Z823A	DIC	174-202
ME1Z825	DIC	174-203
ME1Z825A	DIC	174-204
ME1Z827	DIC	174-205
ME1Z827A	DIC	174-206
ME1Z829	DIC	175- 1
ME1Z935	DIC	184-133
ME1Z935A	DIC	184-134
ME1Z935B	DIC	184-135
ME1Z936	DIC	184-136
ME1Z936A	DIC	184-137
ME1Z936B	DIC	184-138
ME1Z937	DIC	184-139
ME1Z937A	DIC	184-140
ME1Z937B	DIC	184-141
ME1Z938	DIC	184-142
ME1Z938A	DIC	184-143
ME1Z938B	DIC	184-144
ME1Z939	DIC	184-145
ME1Z939A	DIC	184-146
ME1Z939B	DIC	184-147
ME1Z940	DIC	184-148
ME1Z940A	DIC	184-149
ME1Z940B	DIC	184-150
ME1Z941	DIC	191- 94
ME1Z941A	DIC	191- 95
ME1Z941B	DIC	191- 96
ME1Z942	DIC	191- 97
ME1Z942A	DIC	191- 98
ME1Z942B	DIC	191- 99
ME1Z943	DIC	191-100
ME1Z943A	DIC	191-101
ME1Z943B	DIC	191-102
ME1Z944	DIC	191-103
ME1Z944A	DIC	191-104
ME1Z944B	DIC	191-105
ME1Z945	DIC	191-106
ME1Z945A	DIC	191-107
ME1Z945B	DIC	191-108
ME1Z946	DIC	191-109
ME1Z946A	DIC	191-110
ME1Z946B	DIC	191-111
ME1Z4565	DIC	176- 62
ME1Z4565A	DIC	176- 63
ME1Z4566	DIC	176- 64
ME1Z4566A	DIC	176- 65
ME1Z4567	DIC	176- 66
ME1Z4567A	DIC	176- 67
ME1Z4568	DIC	176- 68
ME1Z4568A	DIC	176- 69
ME1Z4569	DIC	176- 70
ME1Z4569A	DIC	176- 71
ME1Z4570	DIC	176- 72
ME1Z4570A	DIC	176- 73
ME1Z4571	DIC	176- 74
ME1Z4571A	DIC	176- 75
ME1Z4572	DIC	176- 76
ME1Z4572A	DIC	176- 77
ME1Z4573	DIC	176- 78
ME1Z4573A	DIC	176- 79
ME1Z4574	DIC	176- 80
ME1Z4574A	DIC	176- 81
ME1Z4575	DIC	176- 82
ME1Z4575A	DIC	176- 83
ME1Z4576	DIC	176- 84
ME1Z4576A	DIC	176- 85
ME1Z4577	DIC	176- 86
ME1Z4577A	DIC	176- 87
ME1Z4578	DIC	176- 88
ME1Z4578A	DIC	176- 89
ME1Z4579	DIC	176- 90
ME1Z4579A	DIC	176- 91
ME1Z4580	DIC	176- 92
ME1Z4580A	DIC	176- 93
ME1Z4581	DIC	176- 94
ME1Z4581A	DIC	176- 95
ME1Z4582	DIC	176- 96
ME1Z4582A	DIC	176- 97
ME1Z4583	DIC	176- 98
ME1Z4583A	DIC	176- 99
ME1Z4584	DIC	176-100
ME1Z4584A	DIC	176-101
ME30	SOIF	394- 10
ME60	SOIF	401- 11
ME100D	SOIF	261- 68
ME120	SOIF	407- 30
ME200	SOIF	410- 20
MGA100	♦ MCPE	600- 80
MGA300	♦ MCPE	600- 81
MGA500	♦ MCPE	600- 82
MGA600	♦ MCPE	600- 83
MGA700	♦ MCPE	600- 84
MGD25	♦ MCPE	298- 94
MGD47	♦ MCPE	266-104
MGD50	♦ MCPE	247- 80
MGD72	♦ MCPE	267- 63
MGD73	♦ MCPE	275- 54
MGD91	♦ MCPE	254- 70
MGLA28,A,B	♦ CODI	166- 67
MGLA31,A,B	♦ CODI	166-149
MGLA35,A,B	♦ CODI	167-103
MGLA39,A,B	♦ CODI	168- 74
MGLA43,A,B	♦ CODI	169- 70
MGLA47,A,B	♦ CODI	170- 61
MGLA51,A,B	♦ CODI	171-106
MGLA56,A,B	♦ CODI	172-125
MGLA62,A,B	♦ CODI	174-116
MGLA68,A,B	♦ CODI	177- 6
MGLA75,A,B	♦ CODI	179- 57
MGLA82,A,B	♦ CODI	181-112
MGLA91,A,B	♦ CODI	185- 38
MGLA100,A,B	♦ CODI	187-105
MH67	SOD	294- 58
MH68	SOD	301- 52
MH69	SOD	312- 52
MH70	SOD	331- 33
MH71	SOD	348- 57
MH72	SOD	361- 29
MH73	SOD	371- 63
MH400	MSC	369- 20
MH401	MSC	383- 97
MH402	MSC	389- 25
MH403	MSC	392- 11
MH404	MSC	393- 60
MH405	MSC	393- 62
MH406	MSC	395- 46
MH407	MSC	395- 47
MH408	MSC	396- 42
MH409	MSC	396- 44
MH410	MSC	398- 91
MH411	MSC	398- 96
MH412	MSC	400- 65
MH500	SOD	340- 99
MH1200	SOD	378- 47
MHD611	GESY	275- 55
MHD612	GESY	275- 56
MHD613	GESY	277- 91
MHD614	GESY	275- 57
MHD615	GESY	275- 58
MHD616	GESY	270-106
MHD617	GESY	275- 78
MHD618	GESY	270- 16
MHD619	GESY	265- 97
MHV1.5	ITT	384- 19
MHV2	ITT	389- 65
MHV2.5	ITT	392- 31
MHV3	ITT	394- 3
MHV3.5	ITT	395- 59
MHV4	ITT	396- 83
MHV5	ITT	399- 33
MHV6	ITT	400-103
MHV7	ITT	402- 28
MHV8	ITT	403- 59
MHV9	ITT	404- 63
MHV10	ITT	405- 67
MI101	MITJ	600- 85
MLED50	♦ MOTA	597- 59
MLED60	♦ MOTA	597- 60
MLED90	♦ MOTA	597- 61
MLED600	♦ MOTA	597- 62
MLED610	♦ MOTA	597- 63
MLED630	♦ MOTA	597- 64
MLED900	♦ MOTA	597- 65
MLED910	♦ MOTA	597- 66
MLED930	♦ MOTA	597- 67
MM1	SOIF	271- 89
MMC1001	MSC	275- 59
MMC1002	MSC	275- 60
MMC1003	MSC	275- 61
MMC1004	MSC	275- 62
MMC1005	MSC	275- 63
MMC1006	MSC	275- 64
MMC1007	MSC	275- 65
MMC1101	MSC	275- 81
MMC1102	MSC	275- 82
MMC1103	MSC	275- 83
MMC1104	MSC	275-102
MMC1105	MSC	275-104
MMC1106	MSC	275-105
MMC1107	MSC	275-103
MMC1108	MSC	275-106
MMC1109	MSC	275-107
MMC1201	MSC	280- 74
MMC1202	MSC	280- 75
MMC1203	MSC	280- 76
MMC1204	MSC	280- 77
MMC1205	MSC	276- 1
MMC1206	MSC	276- 2
MMC1207	MSC	276- 3
MMC1208	MSC	276- 4
MMD70	♦ MOTA	271- 80
MMD6050	♦ MOTA	274- 29
MMD6100	♦ MOTA	274- 30
MMD6150	♦ MOTA	274- 31
MMD7000	♦ MOTA	274- 32
MMD7001	♦ MOTA	269- 95
MMZ3.3,A,-20	USS	167- 42
MMZ3.6,A,-20	USS	167-189
MMZ3.9,A,-20	USS	168-147
MMZ4 3,A,-20	USS	169-145
MMZ4.7,A,-20	USS	170-151
MMZ5.1,A,-20	USS	171-191
MMZ5.6,A,-20	USS	173- 61
MMZ6.2,A,-20	USS	175- 35
MMZ6.8,A,-20	USS	177-141
MMZ7.5,A,-20	USS	180- 8
MMZ8.2,A,-20	USS	182- 55
MMZ9.1,A,-20	USS	185-166
MMZ10,A,-20	USS	188- 59
MMZ11,A,-20	USS	190- 59
MMZ12,A,-20	USS	192-127
MMZ13,A,-20	USS	194-186
MMZ15,A,-20	USS	197-145
MMZ16,A,-20	USS	199-137
MMZ18,A,-20	USS	202- 52
MMZ20,A,-20	USS	205- 6
MMZ22,A,-20	USS	206-165
MMZ24,A,-20	USS	208-155
MMZ27,A,-20	USS	211- 47
MMZ30,A,-20	USS	213- 55
MMZ33,A,-20	USS	215- 19
MMZ36,A,-20	USS	216-132
MMZ39,A,-20	USS	218- 29
MMZ43,A,-20	USS	219-110
MMZ47,A,-20	USS	221- 44
MMZ51,A,-20	USS	223- 1
MMZ56,A,-20	USS	224- 74
MMZ62,A,-20	USS	226- 29
MMZ68,A,-20	USS	227- 82
MMZ75,A,-20	USS	229- 1
MMZ82,A,-20	USS	230- 79
MMZ91,A,-20	USS	232- 22
MMZ100,A,-20	USS	233- 57
MMZ110,A,-20	USS	235- 30
MMZ120,A,-20	USS	236- 53
MMZ130,A,-20	USS	237- 93
MMZ150,A,-20	USS	239- 66
MMZ160,A,-20	USS	240- 98
MMZ180,A,-20	USS	242- 34
MMZ200,A,-20	USS	243- 76
MP2	GESY	267- 29
MPD200	♦ GESY	248- 43
MPD300	♦ GESY	251- 35
MPD400	♦ GESY	253- 45
MPN3201	♦ MOTA	255- 74
MPN3202	♦ MOTA	256-103
MPN3208	♦ MOTA	288- 8
MPN3209	♦ MOTA	288- 17
MPR10	♦ GESY	288- 58
		370- 15
MPR12	♦ GESY	288- 78
		377- 86
MPR15	♦ GESY	288- 98
		384- 63
MPT20	MOTA	600- 86
MPZ5-16A	♦ MOTA	600- 87
MPZ5-16B	♦ MOTA	600- 88
MPZ5-32A	♦ MOTA	600- 89
MPZ5-32B	♦ MOTA	600- 90
MPZ5-32C	♦ MOTA	600- 91
MPZ5-180A	♦ MOTA	600- 92
MPZ5-180B	♦ MOTA	600- 93
MPZ5-180C	♦ MOTA	600- 94
MQ1/1	ITTE	251- 51
MQ1/2	ITTE	255- 29
MQ1/3	ITTE	257- 67
MQ1/4	ITTE	258- 41
MQ1/5	ITTE	259- 12
MQ2	GESY	267- 30
MQ3/1	ITTE	251- 58
MQ3/2	ITTE	255- 35
MQ3/3	ITTE	257- 73
MQ3/4	ITTE	258- 47
MQ3/5	ITTE	259- 17
MQ6/1	ITTE	251- 67
MQ6/2	ITTE	255- 41
MQ6/3	ITTE	257- 79
MQ6/4	ITTE	258- 53
MQ6/5	ITTE	259- 22
MQ8/1	ITTE	251- 74
MQ8/2	ITTE	255- 47
MQ8/3	ITTE	257- 85
MQ8/4	ITTE	258- 59
MQ8/5	ITTE	259- 27
	SLCB	
MQ42G1	♦ ECC	500- 53
MQ42S1	♦ ECC	500- 54
MQ42T1	♦ ECC	500- 55
MQ44G1	♦ ECC	503- 50
MQ44S1	♦ ECC	503- 51
MQ44T1	♦ ECC	503- 52
MQ52G1	♦ ECC	500- 56
MQ52S1	♦ ECC	500- 57
MQ52T1	♦ ECC	500- 58
MQ54G1	♦ ECC	503- 53
MQ54S1	♦ ECC	503- 54
MQ54T1	♦ ECC	503- 55
MQ62G1	♦ ECC	500- 59
MQ62S1	♦ ECC	500- 60
MQ62T1	♦ ECC	500- 61
MQ64G1	♦ ECC	503- 56
MQ64S1	♦ ECC	503- 57
MQ64T1	♦ ECC	503- 58
MR1A	AEIL	176-168
MR2A	AEIL	176-169
MR05	SOIF	272-110
MR5	EDI	295- 93
MR10	EDI	303- 40
MR11	SOIF	279-106
MR20	EDI	314- 50
MR21	SOIF	283-106
MR30	EDI	323- 76
MR31	SOIF	284- 77
MR33C-H	AEIL	166-164
MR36C-H	AEIL	167-121
MR36E-H	AEIL	167-106
MR39C-H	AEIL	168- 75
MR40#	EDI	333- 42
MR41	SOIF	286- 19
MR43C-H	AEIL	169- 71
MR43E-H	AEIL	169- 51
MR47C-H	AEIL	170- 62
MR50	EDI	342- 28
MR51C-H	AEIL	171-107
MR51E-H	AEIL	171- 85
MR52Z	SOIF	286- 39
MR54Z	SOIF	286- 40
MR56C-H	AEIL	172-126
MR60#	EDI	350- 83
MR62C-H	AEIL	174-117
MR62E-H	AEIL	174- 29
MR62Z	SOIF	286-103
MR64Z	SOIF	286-104
MR68C-H	AEIL	177- 7
MR75C-H	AEIL	179- 58
MR75E-H	AEIL	179- 29
MR80#	EDI	363- 3
MR82C-H	AEIL	181-113
MR91C-H	AEIL	185- 39
MR91E-H	AEIL	184-210
MR100#	EDI	373- 7
MR100C-H	AEIL	187-106
MR110C-H	AEIL	189-149
MR120C-H	AEIL	191-191
MR130C-H	AEIL	194- 78
MR150C-H	AEIL	197- 23
MR160C-H	AEIL	199- 29
MR180C-H	AEIL	201-106
MR200	♦ SCO	312- 38
MR200C-H	AEIL	204- 84
MR400	♦ SCO	331- 19
MR600	♦ SCO	348- 40
MR751	♦ MOTA	304-107
MR752	♦ MOTA	316- 32
MR754	♦ MOTA	335- 39
MR756	♦ MOTA	352- 35
MR800	♦ SCO	361- 15
MR830	♦ MOTA	272- 52
MR831	♦ MOTA	279- 4
MR832	♦ MOTA	282- 72
MR834	♦ MOTA	285- 44
MR836	♦ MOTA	286-105
MR990A	♦ MOTA	369- 78
MR991A	♦ MOTA	384- 38
MR992A	♦ MOTA	389- 90
MR993A	♦ MOTA	392- 47
MR994A	♦ MOTA	394- 30
MR995A	♦ MOTA	397- 14
MR996A	♦ MOTA	399- 70
MR1000	♦ SCO	371- 50
MR1033A,B	♦ MOTA	323- 48
MR1035A,B	♦ MOTA	342- 5
MR1120	♦ MOTA	296- 74
MR1121	♦ MOTA	304- 50
MR1122	♦ MOTA	315- 79
MR1123	♦ MOTA	324- 66
MR1124	♦ MOTA	334- 86
MR1125	♦ MOTA	343- 14
MR1126	♦ MOTA	351- 94
MR1128	♦ MOTA	364- 24
MR1130	♦ MOTA	373-108
MR1200	♦ MOTA	297- 62
MR1201	♦ MOTA	305- 73
MR1202	♦ MOTA	308- 63
MR1203	♦ MOTA	317- 12
MR1204	♦ MOTA	319- 66
MR1205	♦ MOTA	325- 57
MR1206	♦ MOTA	327- 77
MR1207	♦ MOTA	336- 32
MR1208	♦ MOTA	343- 95
MR1209	♦ MOTA	353- 4
MR1210SB	♦ MOTA	297- 80
MR1210SL	♦ MOTA	297- 81
MR1211SB	♦ MOTA	306- 6
MR1211SL	♦ MOTA	306- 7
MR1212SB	♦ MOTA	308- 78
MR1212SL	♦ MOTA	308- 79
MR1213SB	♦ MOTA	317- 61
MR1213SL	♦ MOTA	317- 62
MR1214SB	♦ MOTA	319- 78
MR1214SL	♦ MOTA	319- 79

Δ-Registered with JEDEC by this manufacturer

♦-Copy of mfr's data sheet may be ordered from D.A.T.A.

1. TYPE No. CROSS INDEX

IN TYPE NUMBER SEQUENCE

TYPE No.	MFRS	Pg&Line
MR1215SB	♦ MOTA	325 - 99
MR1215SL	♦ MOTA	325 -100
MR1216SB	♦ MOTA	327 - 87
MR1216SL	♦ MOTA	327 - 88
MR1217SB	♦ MOTA	336 - 87
MR1217SL	♦ MOTA	336 - 88
MR1218SB	♦ MOTA	344 - 24
MR1218SL	♦ MOTA	344 - 25
MR1219SB	♦ MOTA	353 - 49
MR1219SL	♦ MOTA	353 - 50
MR1220FB	♦ MOTA	297 -104
MR1220FL	♦ MOTA	297 -105
MR1220SB	♦ MOTA	297 -106
MR1220SL	♦ MOTA	297 -107
MR1221FB	♦ MOTA	306 - 45
MR1221FL	♦ MOTA	306 - 46
MR1221SB	♦ MOTA	306 - 47
MR1221SL	♦ MOTA	306 - 48
MR1222FB	♦ MOTA	308 -102
MR1222FL	♦ MOTA	308 -103
MR1222SB	♦ MOTA	308 -104
MR1222SL	♦ MOTA	308 -105
MR1223FB	♦ MOTA	317 -105
MR1223FL	♦ MOTA	317 -106
MR1223SB	♦ MOTA	317 -107
MR1223SL	♦ MOTA	317 -108
MR1224FB	♦ MOTA	319 - 91
MR1224FL	♦ MOTA	319 - 92
MR1224SB	♦ MOTA	319 - 93
MR1224SL	♦ MOTA	319 - 94
MR1225FB	♦ MOTA	326 - 32
MR1225FL	♦ MOTA	326 - 33
MR1225SB	♦ MOTA	326 - 34
MR1225SL	♦ MOTA	326 - 35
MR1226FB	♦ MOTA	327 - 96
MR1226FL	♦ MOTA	327 - 97
MR1226SB	♦ MOTA	327 - 98
MR1226SL	♦ MOTA	327 - 99
MR1227FB	♦ MOTA	337 - 33
MR1227FL	♦ MOTA	337 - 34
MR1227SB	♦ MOTA	337 - 35
MR1227SL	♦ MOTA	337 - 36
MR1228FB	♦ MOTA	344 - 69
MR1228FL	♦ MOTA	344 - 70
MR1228SB	♦ MOTA	344 - 71
MR1228SL	♦ MOTA	344 - 72
MR1229FB	♦ MOTA	353 - 99
MR1229FL	♦ MOTA	353 -100
MR1229SB	♦ MOTA	353 -101
MR1229SL	♦ MOTA	353 -102
MR1230FB	♦ MOTA	298 - 15
MR1230FL	♦ MOTA	298 - 16
MR1230SB	♦ MOTA	298 - 17
MR1230SL	♦ MOTA	298 - 18
MR1231FB	♦ MOTA	306 - 90
MR1231FL	♦ MOTA	306 - 91
MR1231SB	♦ MOTA	306 - 92
MR1231SL	♦ MOTA	306 - 93
MR1232FB	♦ MOTA	309 - 15
MR1232FL	♦ MOTA	309 - 16
MR1232SB	♦ MOTA	309 - 17
MR1232SL	♦ MOTA	309 - 18
MR1233FB	♦ MOTA	318 - 42
MR1233FL	♦ MOTA	318 - 43
MR1233SB	♦ MOTA	318 - 44
MR1233SL	♦ MOTA	318 - 45
MR1234FB	♦ MOTA	319 -105
MR1234FL	♦ MOTA	319 -106
MR1234SB	♦ MOTA	319 -107
MR1234SL	♦ MOTA	319 -108
MR1235FB	♦ MOTA	326 - 73
MR1235FL	♦ MOTA	326 - 74
MR1235SB	♦ MOTA	326 - 75
MR1235SL	♦ MOTA	326 - 76
MR1236FB	♦ MOTA	327 -106
MR1236FL	♦ MOTA	327 -107
MR1236SB	♦ MOTA	327 -108
MR1236SL	♦ MOTA	327 -109
MR1237FB	♦ MOTA	337 - 86
MR1237FL	♦ MOTA	337 - 87
MR1237SB	♦ MOTA	337 - 88
MR1237SL	♦ MOTA	337 - 89
MR1238FB	♦ MOTA	344 -110
MR1238FL	♦ MOTA	345 - 1
MR1238SB	♦ MOTA	345 - 2
MR1238SL	♦ MOTA	345 - 3
MR1239FB	♦ MOTA	354 - 35
MR1239FL	♦ MOTA	354 - 36
MR1239SB	♦ MOTA	354 - 37
MR1239SL	♦ MOTA	354 - 38
MR1240FB	♦ MOTA	298 - 21
MR1240FL	♦ MOTA	298 - 22
MR1240SB	♦ MOTA	298 - 23
MR1240SL	♦ MOTA	298 - 24
MR1241FB	♦ MOTA	307 - 1
MR1241FL	♦ MOTA	307 - 2
MR1241SB	♦ MOTA	307 - 3
MR1241SL	♦ MOTA	307 - 4
MR1242FB	♦ MOTA	309 - 21
MR1242FL	♦ MOTA	309 - 22
MR1242SB	♦ MOTA	309 - 23
MR1242SL	♦ MOTA	309 - 24
MR1243FB	♦ MOTA	318 - 65
MR1243FL	♦ MOTA	318 - 66
MR1243SB	♦ MOTA	318 - 67
MR1243SL	♦ MOTA	318 - 68
MR1244FB	♦ MOTA	319 -109
MR1244FL	♦ MOTA	319 -110
MR1244SB	♦ MOTA	320 - 1
MR1244SL	♦ MOTA	320 - 2
MR1245FB	♦ MOTA	326 - 94
MR1245FL	♦ MOTA	326 - 95
MR1245SB	♦ MOTA	326 - 96
MR1245SL	♦ MOTA	326 - 97
MR1246FB	♦ MOTA	327 -110
MR1246FL	♦ MOTA	328 - 1
MR1246SB	♦ MOTA	328 - 2
MR1246SL	♦ MOTA	328 - 3
MR1247FB	♦ MOTA	338 - 5
MR1247FL	♦ MOTA	338 - 6
MR1247SB	♦ MOTA	338 - 7
MR1247SL	♦ MOTA	338 - 8
MR1248FB	♦ MOTA	345 - 25
MR1248FL	♦ MOTA	345 - 26
MR1248SB	♦ MOTA	345 - 27
MR1248SL	♦ MOTA	345 - 28
MR1249FB	♦ MOTA	354 - 61
MR1249FL	♦ MOTA	354 - 62
MR1249SB	♦ MOTA	354 - 63
MR1249SL	♦ MOTA	354 - 64
MR1260	♦ MOTA	298 - 29
MR1261	♦ MOTA	307 - 12
MR1262	♦ MOTA	309 - 28
MR1263	♦ MOTA	318 - 78
MR1264	♦ MOTA	320 - 4
MR1265	♦ MOTA	326 -107
MR1266	♦ MOTA	328 - 4
MR1267	♦ MOTA	338 - 21
MR1268	♦ MOTA	345 - 40
MR1269	♦ MOTA	354 - 81
MR1290	♦ MOTA	298 - 31
MR1291	♦ MOTA	307 - 16
MR1292	♦ MOTA	309 - 29
MR1293	♦ MOTA	318 - 82
MR1294	♦ MOTA	320 - 5
MR1295	♦ MOTA	327 - 2
MR1296	♦ MOTA	328 - 5
MR1297	♦ MOTA	338 - 27
MR1337-1	♦ MOTA	293 - 88
MR1337-2	♦ MOTA	300 - 46
MR1337-3	♦ MOTA	311 - 29
MR1337-4	♦ MOTA	321 - 51
MR1337-5	♦ MOTA	330 - 5
MR1366	♦ MOTA	286 -106
MR1376	♦ MOTA	286 -107
MR1386	♦ MOTA	286 -108
MR1396	♦ MOTA	286 -109
MR1810SB	♦ MOTA	297 - 82
MR1810SL	♦ MOTA	297 - 83
MR1811SB	♦ MOTA	306 - 8
MR1811SL	♦ MOTA	306 - 9
MR1812SB	♦ MOTA	308 - 80
MR1812SL	♦ MOTA	308 - 81
MR1813SB	♦ MOTA	317 - 63
MR1813SL	♦ MOTA	317 - 64
MR1814SB	♦ MOTA	319 - 80
MR1814SL	♦ MOTA	319 - 81
MR1815SB	♦ MOTA	325 -101
MR1815SL	♦ MOTA	325 -102
MR1816SB	♦ MOTA	327 - 89
MR1816SL	♦ MOTA	327 - 90
MR1817SB	♦ MOTA	336 - 89
MR1817SL	♦ MOTA	336 - 90
MR1818SB	♦ MOTA	344 - 26
MR1818SL	♦ MOTA	344 - 27
MR1819SB	♦ MOTA	353 - 51
MR1819SL	♦ MOTA	353 - 52
MR2064	♦ MOTA	294 - 39
MR2065	♦ MOTA	301 - 28
MR2066	♦ MOTA	312 - 27
MR2067	♦ MOTA	331 - 8
MR2068	♦ MOTA	348 - 35
MR2069	♦ MOTA	295 - 78
MR2070	♦ MOTA	303 - 9
MR2071	♦ MOTA	314 - 18
MR2072	♦ MOTA	323 - 49
MR2073	♦ MOTA	333 - 11
MR2074	♦ MOTA	342 - 6
MR2075	♦ MOTA	350 - 29
MR2080HA	♦ MOTA	298 - 30
MR2081HA	♦ MOTA	307 - 13
MR2082HA	♦ MOTA	318 - 79
MR2083HA	♦ MOTA	326 -109
MR2084HA	♦ MOTA	338 - 24
MR2100HA	♦ MOTA	345 - 44
MR2101HA	♦ MOTA	307 - 17
MR2102HA	♦ MOTA	318 - 83
MR2103HA	♦ MOTA	327 - 3
MR2104HA	♦ MOTA	338 - 28
MR2261	♦ MOTA	292 - 16
MR2262	♦ MOTA	292 - 33
MR2263	♦ MOTA	292 - 63
MR2264	♦ MOTA	292 - 73
MR2265	♦ MOTA	297 - 16
MR2266	♦ MOTA	361 - 12
MR2271	♦ MOTA	284 - 45
MR2272	♦ MOTA	331 - 9
MR2273	♦ MOTA	312 - 28
MR2369	♦ MOTA	295 - 79
MR2370	♦ MOTA	303 - 10
MR2371	♦ MOTA	314 - 19
MR2372	♦ MOTA	323 - 50
MR2373	♦ MOTA	333 - 12
MR2374	♦ MOTA	342 - 7
MR2375	♦ MOTA	350 - 30
MRD500	♦ MOTA	575 -107
MRD510	♦ MOTA	575 -108
MS1A	♦ FERB	575 -109
MS1AE	♦ FERB	575 -110
MS1B	♦ FERB	576 - 1
MS1BE	♦ FERB	576 - 2
MS1H	AEIL	251 - 41
MS2A	♦ FERB	576 - 3
MS2AE	♦ FERB	576 - 4
MS2B	♦ FERB	576 - 5
MS2BE	♦ FERB	576 - 6
MS2H	AEIL	254 - 15
MS3H	AEIL	256 - 22
MS4A	♦ FERB	576 - 7
MS4B	♦ FERB	576 - 8
MS4H	AEIL	257 - 26
MS5	EDI	296 - 25
MS5A	♦ FERB	576 - 9
MS5B	♦ FERB	576 - 10
MS5H	AEIL	258 - 86
MS6A	♦ FERB	576 - 11
MS6B	♦ FERB	576 - 12
MS7A	♦ FERB	576 - 13
MS7B	♦ FERB	576 - 14
MS9A	♦ FERB	576 - 15
MS9AE	♦ FERB	576 - 16
MS9B	♦ FERB	576 - 17
MS9BE	♦ FERB	576 - 18
MS10△	FERB	576 - 19
MS10⊘	EDI	303 - 92
MS11A	♦ FERB	576 - 20
MS11AE	♦ FERB	576 - 21
MS11B	♦ FERB	576 - 22
MS11BE	♦ FERB	576 - 23
MS11H	AEIL	251 - 46
MS12	♦ FERB	576 - 24
MS12H	AEIL	254 - 23
MS13H	AEIL	256 - 37
MS14H	AEIL	257 - 40
MS20△	FERB	579 -109
MS20⊘	EDI	315 - 2
MS22	FERB	579 -110
MS30	EDI	324 - 14
MS35H	AEIL	258 - 99
MS36H	AEIL	259 - 63
MS37H	AEIL	259 -105
MS38H	AEIL	260 - 13
MS40⊘	EDI	334 - 1
MS50△	AEIL	247 - 49
MS50⊘	EDI	342 - 73
MS51	AEIL	270 -107
MS59B	♦ FERB	576 - 25
MS59BE	♦ FERB	576 - 26
MS59PCD	♦ FERB	576 - 27
MS59PCDE	♦ FERB	576 - 28
MS60	EDI	351 - 18
MS80⊘	EDI	363 - 64
MS100	EDI	373 - 50
MS114	SOD	593 - 39
MS124	SOD	593 - 40
MS134	SOD	593 - 41
MS214	SOD	593 - 42
MS224⊘	SOD	593 - 43
MS224A	MSE	568 - 74
MS225△	MSE	570 - 67
MS225A	MSE	570 - 61
MS233A	MSE	567 - 85
MS234	SOD	570 - 41
MS262,3,4	♦ MSE	526 - 6
MS265	♦ MSE	524 - 13
MS266	♦ MSE	523 - 89
MS301	SOD	267 - 31
MS302	SOD	267 - 32
MS303	SOD	265 - 69
MS314	SOD	593 - 44
MS324	SOD	593 - 45
MS334	SOD	593 - 46
MS514	SOD	593 - 47
MS524	SOD	593 - 48
MS801X	♦ RAYN	595 - 37
MS802A	MSE	595 - 38
MS802B	MSE	595 - 39
MS802X	♦ RAYN	595 - 40
MS803X	♦ RAYN	595 - 41
MS804X	♦ RAYN	595 - 42
MS805A	MSE	595 - 43
MS805B	MSE	595 - 44
MS805X	♦ RAYN	595 - 45
MS806A	MSE	595 - 46
MS806B	MSE	595 - 47
MS806X	♦ RAYN	595 - 48
MS807X	♦ RAYN	595 - 49
MS808X	♦ RAYN	595 - 50
MS809A	MSE	595 - 51
MS809B	MSE	595 - 52
MS809X	♦ RAYN	595 - 53
MS810A	MSE	595 - 54
MS810B	MSE	595 - 55
MS811A	MSE	595 - 56
MS811B	MSE	595 - 57
MS812A	MSE	595 - 58
MS812B	MSE	595 - 59
MS813A	MSE	595 - 60
MS813B	MSE	595 - 61
MS831A	MSE	595 - 62
MS831B	MSE	595 - 63
MS832A	MSE	595 - 64
MS832B	MSE	595 - 65
MS833A	MSE	595 - 66
MS833B	MSE	595 - 67
MS834A	MSE	595 - 68
MS834B	MSE	595 - 69
MS835A	MSE	595 - 70
MS835B	MSE	595 - 71
MS836A	MSE	595 - 72
MS836B	MSE	595 - 73
MS837A	MSE	595 - 74
MS837B	MSE	595 - 75
MS838A	MSE	595 - 76
MS838B	MSE	595 - 77
MS851X	♦ RAYN	595 - 78
MS852A	MSE	595 - 79
MS852B	MSE	595 - 80
MS852X	♦ RAYN	595 - 81
MS853X	♦ RAYN	595 - 82
MS854X	♦ RAYN	595 - 83
MS855A	MSE	595 - 84
MS855B	MSE	595 - 85
MS855X	♦ RAYN	595 - 86
MS856A	MSE	595 - 87
MS856B	MSE	595 - 88
MS856X	♦ RAYN	595 - 89
MS857A	MSE	595 - 90
MS857B	MSE	595 - 91
MS858A	MSE	595 - 92
MS858B	MSE	595 - 93
MS859A	MSE	595 - 94
MS859B	MSE	595 - 95
MS871A	MSE	595 - 96
MS871B	MSE	595 - 97
MS872A	MSE	595 - 98
MS872B	MSE	595 - 99
MS873A	MSE	595 -100
MS873B	MSE	595 -101
MS874A	MSE	595 -102
MS874B	MSE	595 -103
MS891A	MSE	595 -104
MS891B	MSE	595 -105
MS892A	MSE	595 -106
MS892B	MSE	595 -107
MS893A	MSE	595 -108
MS893B	MSE	595 -109
MS1005A	MSE	568 - 64
MS1007A	MSE	568 - 58
MS1010	MSE	581 - 53
MS1011	♦ MSE	581 - 54
MS1012	♦ MSE	581 - 55
MS1020A	MSE	568 - 53
MS1021A	MSE	568 - 47
MS1022A	MSE	568 - 43
MS1023A	MSE	568 - 39
MS1040	MSE	517 - 4
MS1041	MSE	517 - 5
MS1042	MSE	517 - 6
MS1043	MSE	517 - 7
MS1049	MSE	567 - 86
MS1052	MSE	571 - 32
MS1054	MSE	572 - 3
MS1059	MSE	572 - 70
MS1081	MSE	567 - 87
MS1081A	MSE	567 - 88
MS1083	MSE	571 - 33
MS1083A	MSE	571 - 34
MS1085	MSE	572 - 4
MS1085A	MSE	572 - 5
MS1087	MSE	572 - 71
MS1087A	MSE	572 - 72
MS1100A	MSE	570 - 62
MS1101A	MSE	570 - 59
MS1102A	MSE	570 - 54
MS1103A	MSE	570 - 52
MS1140A	MSE	570 - 24
MS1141A	MSE	570 - 19
MS1142A	MSE	570 - 11
MS1143A	MSE	570 - 9
MS1144A	MSE	569 -108
MS1145A	MSE	569 -106
MS1146A	MSE	569 -104
MS1152	MSE	571 - 20
MS1154	MSE	571 - 91
MS1159	MSE	572 - 55
MS1163	MSE	571 - 21
MS1163A	MSE	571 - 22
MS1165	MSE	571 - 92
MS1165A	MSE	571 - 93
MS1167	MSE	572 - 56
MS1167A	MSE	572 - 57
MS1201A	MSE	568 - 65
MS1202A	MSE	568 - 59
MS1204A	MSE	568 - 54
MS1205A	MSE	568 - 48
MS1206A	MSE	568 - 44
MS1207A	MSE	568 - 40
MS1208A	MSE	568 - 35
MS1209A	MSE	568 - 32
MS1220A	MSE	570 - 63
MS1221A	MSE	570 - 60
MS1222A	MSE	570 - 55
MS1223A	MSE	570 - 53
MS1224A	MSE	570 - 49
MS1225A	MSE	570 - 46
MS1241A	MSE	570 - 20
MS1242A	MSE	570 - 12
MS1243A	MSE	570 - 10
MS1244A	MSE	569 -109
MS1245A	MSE	569 -107
MS1246A	MSE	569 -105
MS1247A	MSE	569 - 97
MS1248A	MSE	569 - 90
MS1300	MSE	569 - 41
MS1301	MSE	571 - 45
MS1302	MSE	571 - 35
MS1303	MSE	572 - 15
MS1304	MSE	572 - 6
MS1305	MSE	572 - 73
MS1504A	MSE	567 - 66
MS1505A	MSE	567 - 47
MS1506A	MSE	569 - 29
MS1507A	MSE	567 - 50
MS1508A	MSE	567 - 48
MS1509A	MSE	569 - 38
MS1510A	MSE	569 - 24
MS1511A	MSE	569 - 18
MS1512A	MSE	567 - 43
MS1513A	MSE	569 - 11
MS1520A	MSE	568 - 75
MS1521A	MSE	568 - 69
MS1522A	MSE	568 - 67
MS1523A	MSE	568 - 60
MS1524A	MSE	568 - 55
MS1525A	MSE	568 - 49
MS1526A	MSE	568 - 41
MS1530	MSE	571 - 36
MS1530A	MSE	571 - 37
MS1531	MSE	572 - 7
MS1531A	MSE	572 - 8
MS1532	MSE	572 - 74
MS1532A	MSE	572 - 75
MS1533	MSE	573 - 32
MS1533A	MSE	573 - 33
MS1534	MSE	573 - 62
MS1534A	MSE	573 - 63
MS1535	MSE	573 - 79
MS1535A	MSE	573 - 85
MS1536A	MSE	573 - 95
MS1540	MSE	571 - 6
MS1541	MSE	571 - 69
MS1542	MSE	572 - 40
MS1550	MSE	571 - 38
MS1550A	MSE	571 - 39
MS1551	MSE	572 - 9
MS1551A	MSE	572 - 10
MS1552	MSE	572 - 76
MS1552A	MSE	572 - 77
MS1553	MSE	573 - 34
MS1553A	MSE	573 - 35
MS1554	MSE	573 - 64
MS1554A	MSE	573 - 65
MS1555	MSE	573 - 80
MS1555A	MSE	573 - 81
MS1560A	MSE	567 - 67
MS1561A	MSE	567 - 65
MS1562A	MSE	567 - 51
MS1563A	MSE	567 - 49
MS1564A	MSE	567 - 44
MS1570A	MSE	569 - 39
MS1571A	MSE	569 - 30
MS1572A	MSE	569 - 25
MS1573A	MSE	569 - 19
MS1574A	MSE	569 - 12
MS1575A	MSE	569 - 5
MS1581A	MSE	568 - 70
MS1582A	MSE	568 - 68
MS1583A	MSE	568 - 61
MS1584A	MSE	568 - 56
MS1585A	MSE	568 - 50
MS1586A	MSE	568 - 42
MS1650X	MSC	514 - 35
MS1651X	MSC	514 - 36
MS1700	MSE	569 - 42
MS1701	MSE	571 - 46
MS1702	MSE	571 - 40
MS1703	MSE	572 - 16
MS1704	MSE	572 - 11
MS1705	MSE	572 - 78
MS2006	♦ MSE	523 - 20
MS2022	MSE	263 - 22
MS2023	MSE	263 - 23
MS2024	MSE	263 - 97
MS2025	MSE	263 - 98
MS2542	MSE	263 - 24
MS2543	MSE	263 - 25
MS2544	MSE	263 - 99
MS2545	MSE	263 -100
MS2562	MSE	263 - 26
MS2562A	MSE	263 - 5
MS2563	MSE	263 - 27
MS2563A	MSE	263 - 6
MS2564	MSE	263 -101
MS2564A	MSE	263 - 90
MS2565	MSE	263 -102
MS2565A	MSE	263 - 91
MS3130,1,2,3,4,5		519 - 41
	MSE	
MS3136	MSE	519 - 4
MS3140,1,2,3	MSE	534 - 16
MS3145,6,7	MSE	538 -100
MS3150,1-5	MSE	530 -110
MS3160,1-5	MSE	525 -104
MS3166	MSE	519 - 5
MS3170,1-5	MSE	531 - 1
MS3180,1,2,3	MSE	534 - 17
MS3190,1,2	MSE	538 -101
MS3200,1-5	MSE	525 -105
MS3210,1-4	MSE	531 - 2
MS3220,1,2,3	MSE	534 - 18
MS3230,1	MSE	538 -102
MS3250,1-5	MSE	525 -106
MS3256	MSE	519 - 6
MS3260,1-5	MSE	531 - 3
MS3266	MSE	600 - 95
MS3270,1-4	MSE	534 - 19
MS3280,1,2	MSE	538 -103
MS4101,2,3	♦ MSE	526 - 7
MS4104	♦ MSE	524 - 14
MS4105	♦ MSE	523 - 90
MS4106	♦ MSE	523 - 21
MS4107	♦ MSE	521 - 78
MS4108,9,10	♦ MSE	520 - 53
MS4111,12	♦ MSE	520 - 9
MS4150,1-5	MSE	525 -107
MS4156	MSE	519 - 7
MS4160,1-5	MSE	531 - 4
MS4166	MSE	519 - 8
MS4170,1-4	MSE	534 - 20
MS4180,1,2	MSE	538 -104
MS4200,1-5	MSE	525 -108
MS4206	MSE	519 - 9
MS4210,1-5	MSE	531 - 5
MS4220,1-3	MSE	534 - 21
MS4230,1,2	MSE	538 -105
MS4250,1-5	MSE	525 -109
MS4256	MSE	519 - 10
MS4260,1-5	MSE	531 - 6
MS4270,1,2,3	MSE	534 - 22

△-Registered with JEDEC by this manufacturer

♦-Copy of mfr's data sheet may be ordered from D.A.T.A.

1. TYPE No. CROSS INDEX

IN TYPE NUMBER SEQUENCE

TYPE No.	MFRS	Pg&Line
MS4280,1,2	MSE	538-106
MS4300,1-5	MSE	525-110
MS4310,11-14	MSE	531- 7
MS4320,1,2	MSE	534- 23
MS4330,1	MSE	538-107
MS4403	♦MSE	526- 8
MS4404	♦MSE	524- 15
MS4405	♦MSE	523- 91
MS4406	♦MSE	523- 22
MS4407	MSE	521- 79
MS4408,9,10	MSE	520- 54
MS4411,12	MSE	520- 10
MS5000-8	♦MSE	600- 96
MS5000-8A	♦MSE	600- 97
MS5000-12	♦MSE	600- 98
MS5000-16	♦MSE	600- 99
MS5000-16A	♦MSE	600-100
MS5100-4A	♦MSE	600-101
MS5132-4A	♦MSE	268- 32
MS5132-8	♦MSE	268- 33
MS5132-16A	♦MSE	268- 34
MS5133-4A	♦MSE	268- 44
MS5133-8	♦MSE	268- 45
MS5133-16A	♦MSE	268- 46
MS5134-4A	♦MSE	268- 39
MS5134-8	♦MSE	268- 40
MS5134-16A	♦MSE	268- 41
MS5200-4A	♦MSE	600-102
MS5200-8	♦MSE	600-103
MS5200-8A	♦MSE	600-104
MS5240-4A	♦MSE	274- 12
MS5240-8	♦MSE	274- 13
MS5240-16A	♦MSE	274- 14
MS5241-4A	♦MSE	274- 15
MS5241-8	♦MSE	274- 16
MS5241-16A	♦MSE	274- 17
MS5242-4A	♦MSE	268- 27
MS5242-8	♦MSE	268- 28
MS5242-16A	♦MSE	268- 29
MS5243-4A	♦MSE	268- 24
MS5243-8	♦MSE	268- 25
MS5243-16A	♦MSE	268- 26
MS5251-4A	♦MSE	264- 91
MS5251-8	♦MSE	264- 92
MS5251-16A	♦MSE	264- 93
MS5252-4A	♦MSE	264- 94
MS5252-8	♦MSE	264- 95
MS5252-16A	♦MSE	264- 96
MS5253-4A	♦MSE	266- 27
MS5253-8	♦MSE	266- 28
MS5253-16A	♦MSE	266- 29
MS5254-4A	♦MSE	266- 31
MS5254-8	♦MSE	266- 32
MS5254-16A	♦MSE	266- 33
MS6030-1	MSE	586- 96
MS6030-8	MSE	586- 97
MS6031-1	MSE	586- 98
MS6031-8	MSE	586- 99
MS6032-1	MSE	586-100
MS6032-8	MSE	586-101
MS6033-1	MSE	586-102
MS6033-8	MSE	586-103
MS6034-1	MSE	586-104
MS6034-8	MSE	586-105
MS6035-1	MSE	586-106
MS6035-8	MSE	586-107
MS6040-1	MSE	586-108
MS6040-8	MSE	586-109
MS6041-1	MSE	586-110
MS6041-8	MSE	587- 1
MS6042-1	MSE	587- 2
MS6042-8	MSE	587- 3
MS6043-1	MSE	587- 4
MS6043-8	MSE	587- 5
MS6044-1	MSE	587- 6
MS6044-8	MSE	587- 7
MS6045-1	MSE	587- 8
MS6045-8	MSE	587- 9
MS7101	♦MITJ	268- 35
MS7111	MITJ	268- 36
MS8101	♦MSE	600-105
MS8102	♦MSE	600-106
MS8104	♦MSE	600-107
MS8108	♦MSE	600-108
MS8112	♦MSE	600-109
MS8201	♦MSE	600-110
MS8202	♦MSE	601- 1
MS8204	♦MSE	601- 2
MS8208	♦MSE	601- 3
MS8212	♦MSE	601- 4
MSC32A,B	MSC	268- 18
MSC33A,B	MSC	268- 19
MSC34A,B	MSC	268- 20
MSC35A,B	MSC	267- 84
MSC36A,B	MSC	267- 85
MSC37A,B	MSC	267- 86
MSC910	MSC	587- 10
MSC911	MSC	587- 11
MSC912	MSC	587- 12
MSC913	MSC	587- 13
MSC914	MSC	587- 14
MSC915	MSC	587- 15
MSC916	MSC	587- 16
MSC917	MSC	587- 17
MSC918	MSC	587- 18
MSC919	MSC	587- 19
MSC920	MSC	587- 20
MSC921	MSC	587- 21
MSC922	MSC	587- 22
MSC923	MSC	587- 23
MSC924	MSC	587- 24
MSC925	MSC	587- 25
MSC926	MSC	587- 26
MSC927	MSC	587- 27
MSC928	MSC	587- 28
MSC929	MSC	587- 29
MSC930	MSC	587- 30
MSC931	MSC	587- 31
MSC932	MSC	587- 32
MSC933	MSC	587- 33
MSC934	MSC	587- 34
MSC935	MSC	587- 35
MSC936	MSC	587- 36
MSC937	MSC	587- 37
MSC938	MSC	587- 38
MSC939	MSC	587- 39
MSC940	MSC	587- 40
MSC941	MSC	587- 41
MSC942	MSC	587- 42
MSC943	MSC	587- 43
MSC944	MSC	587- 44
MSC945	MSC	587- 45
MSC946	MSC	587- 46
MSC947	MSC	587- 47
MSC948	MSC	587- 48
MSC949	MSC	587- 49
MSC1010	MSC	587- 50
MSC1011	MSC	587- 51
MSC1012	MSC	587- 52
MSC1013	MSC	587- 53
MSC1014	MSC	587- 54
MSC1015	MSC	587- 55
MSC1016	MSC	587- 56
MSC1017	MSC	587- 57
MSC1018	MSC	587- 58
MSC1019	MSC	587- 59
MSC1020	MSC	587- 60
MSC1021	MSC	587- 61
MSC1022	MSC	587- 62
MSC1023	MSC	587- 63
MSC1024	MSC	587- 64
MSC1025	MSC	587- 65
MSC1026	MSC	587- 66
MSC1027	MSC	587- 67
MSC1028	MSC	587- 68
MSC1029	MSC	587- 69
MSC1030	MSC	587- 70
MSC1031	MSC	587- 71
MSC1032	MSC	587- 72
MSC1033	MSC	587- 73
MSC1034	MSC	587- 74
MSC1035	MSC	587- 75
MSC1036	MSC	587- 76
MSC1037	MSC	587- 77
MSC1038	MSC	587- 78
MSC1039	MSC	587- 79
MSC1040	MSC	587- 80
MSC1041	MSC	587- 81
MSC1042	MSC	587- 82
MSC1043	MSC	587- 83
MSC1044	MSC	587- 84
MSC1045	MSC	587- 85
MSC1046	MSC	587- 86
MSC1047	MSC	587- 87
MSC1048	MSC	587- 88
MSC1049	MSC	587- 89
MSC1110	MSC	587- 90
MSC1111	MSC	587- 91
MSC1112	MSC	587- 92
MSC1113	MSC	587- 93
MSC1114	MSC	587- 94
MSC1115	MSC	587- 95
MSC1116	MSC	587- 96
MSC1117	MSC	587- 97
MSC1118	MSC	587- 98
MSC1119	MSC	587- 99
MSC1120	MSC	587-100
MSC1121	MSC	587-101
MSC1122	MSC	587-102
MSC1123	MSC	587-103
MSC1124	MSC	587-104
MSC1125	MSC	587-105
MSC1126	MSC	587-106
MSC1127	MSC	587-107
MSC1128	MSC	587-108
MSC1129	MSC	587-109
MSC1130	MSC	587-110
MSC1131	MSC	588- 1
MSC1132	MSC	588- 2
MSC1133	MSC	588- 3
MSC1134	MSC	588- 4
MSC1135	MSC	588- 5
MSC1136	MSC	588- 6
MSC1137	MSC	588- 7
MSC1138	MSC	588- 8
MSC1139	MSC	588- 9
MSC1140	MSC	588- 10
MSC1141	MSC	588- 11
MSC1142	MSC	588- 12
MSC1143	MSC	588- 13
MSC1144	MSC	588- 14
MSC1145	MSC	588- 15
MSC1146	MSC	588- 16
MSC1147	MSC	588- 17
MSC1148	MSC	588- 18
MSC1149	MSC	588- 19
MSC1210	MSC	588- 20
MSC1211	MSC	588- 21
MSC1212	MSC	588- 22
MSC1213	MSC	588- 23
MSC1214	MSC	588- 24
MSC1215	MSC	588- 25
MSC1216	MSC	588- 26
MSC1217	MSC	588- 27
MSC1218	MSC	588- 28
MSC1219	MSC	588- 29
MSC1220	MSC	588- 30
MSC1221	MSC	588- 31
MSC1222	MSC	588- 32
MSC1223	MSC	588- 33
MSC1224	MSC	588- 34
MSC1225	MSC	588- 35
MSC1226	MSC	588- 36
MSC1227	MSC	588- 37
MSC1228	MSC	588- 38
MSC1229	MSC	588- 39
MSC1230	MSC	588- 40
MSC1231	MSC	588- 41
MSC1232	MSC	588- 42
MSC1233	MSC	588- 43
MSC1234	MSC	588- 44
MSC1235	MSC	588- 45
MSC1236	MSC	588- 46
MSC1237	MSC	588- 47
MSC1238	MSC	588- 48
MSC1239	MSC	588- 49
MSC1240	MSC	588- 50
MSC1241	MSC	588- 51
MSC1242	MSC	588- 52
MSC1243	MSC	588- 53
MSC1244	MSC	588- 54
MSC1245	MSC	588- 55
MSC1246	MSC	588- 56
MSC1247	MSC	588- 57
MSC1248	MSC	588- 58
MSC1249	MSC	588- 59
MSD6100	MOTA	277- 92
MSD6101	MOTA	271- 70
MSD6150	♦MOTA	274- 45
MSJ112	SOD	593- 49
MSJ114	SOD	593- 50
MSP3	♦MCPE	577- 93
MSP6	♦MCPE	577- 94
MSP30	AEIL	576- 29
MSP31	AEIL	576- 30
MSP32	AEIL	576- 31
MSP33	AEIL	576- 32
MSP34	AEIL	576- 33
MSP35	AEIL	576- 34
MSR5	♦MCPE	273- 11
MSR10	♦MCPE	280- 12
MSR20	♦MCPE	283- 66
MSR40	♦MCPE	286- 11
MSR60	♦MCPE	287- 70
MSR80	♦MCPE	288- 10
MSR100	♦MCPE	288- 66
MT5	EDI	296- 78
MT10	EDI	304- 54
MT14	SOIF	299- 45
MT020	MSC	318- 94
MT020A	MSC	310- 20
MT20	EDI	315- 86
MT021	MSC	293- 23
MT021A	MSC	293- 24
MT022	MSC	299- 59
MT022A	MSC	299- 60
MT023	MSC	307- 68
MT023A	MSC	307- 69
MT24	SOIF	310- 5
MT030	MSC	320- 78
MT030A	MSC	320- 79
MT30	EDI	324- 71
MT040	MSC	328- 87
MT040A	MSC	328- 88
MT40	EDI	334- 94
MT44	SOIF	328- 72
MT050	MSC	339- 42
MT050A	MSC	339- 43
MT50	EDI	343- 19
MT060	MSC	346- 31
MT060A	MSC	346- 32
MT60	EDI	351-100
MT64	SOIF	346- 22
MT070	MSC	355- 21
MT070A	MSC	355- 22
MT080	MSC	359- 45
MT080A	MSC	359- 46
MT80	EDI	364- 30
MT84	SOIF	359- 34
MT090	MSC	366-108
MT090A	MSC	366-109
MT100△	EDI	374- 3
MT100⊠	MSC	369- 98
MT100A	MSC	369- 99
MT170	MSC	256- 23
MT200	MSC	273- 24
MT201	MSC	280- 24
MT202	MSC	283- 73
MT203	MSC	284- 71
MT204	MSC	286- 16
MT205	MSC	286- 65
MT206	MSC	287- 74
MT207	MSC	273- 25
MT208	MSC	280- 25
MT209	MSC	283- 74
MT210	MSC	284- 72
MT211	MSC	286- 17
MT212	MSC	286- 66
MT213	MSC	287- 75
MT456	MSC	248- 17
MT456A	MSC	248- 35
MT457	MSC	251-100
MT457A	MSC	252- 13
MT458	MSC	255- 73
MT458A	MSC	256- 1
MT459	MSC	256-101
MT459A	MSC	257- 15
MT461	MSC	248- 7
MT461A	MSC	248- 36
MT462	MSC	251- 89
MT462A	MSC	252- 14
MT463	MSC	256- 96
MT463A	MSC	257- 16
MT464	MSC	255- 65
MT464A	MSC	256- 2
MT482	MSC	249- 28
MT482A	MSC	249- 24
MT482B	MSC	249- 25
MT483	MSC	252-108
MT483A	MSC	252-104
MT483B	MSC	252-105
MT484	MSC	256- 7
MT484A	MSC	256- 3
MT484B	MSC	256- 4
MT485	MSC	257- 21
MT485A	MSC	257- 17
MT485B	MSC	257- 18
MT486	MSC	258- 24
MT486A	MSC	258- 21
MT486B	MSC	258- 22
MT700	♦MSC	271- 10
MT701	♦MSC	277- 93
MT702	♦MSC	271- 11
MT703	♦MSC	271- 12
MT704	♦MSC	269- 27
MT705	♦MSC	273- 41
MT706	♦MSC	269- 28
MT707	♦MSC	271- 29
MT708	♦MSC	269- 45
MT709	♦MSC	271- 81
MT710	♦MSC	269- 54
MT711	♦MSC	271-106
MT712	♦MSC	276- 60
MT713	♦MSC	276- 62
MT714	♦MSC	276- 65
MT715	♦MSC	276- 69
MT716	♦MSC	276- 66
MT717	♦MSC	276- 70
MT890	MSC	252- 87
MTZ607,A	MSC	173- 43
MTZ608,A	MSC	175- 16
MTZ609,A	MSC	176-142
MTZ610,A	MSC	177-114
MTZ611,A	MSC	179-162
MTZ612,A	MSC	182- 29
MTZ613,A	MSC	185-141
MTZ614,A	MSC	188- 29
MTZ615,A	MSC	190- 35
MTZ616,A	MSC	192-100
MTZ617,A	MSC	194-161
MTZ618,A	MSC	197-118
MTZ619,A	MSC	199-112
MTZ620,A	MSC	202- 25
MTZ621,A	MSC	204-166
MTZ622,A	MSC	206-139
MTZ623,A	MSC	208-129
MTZ624,A	MSC	211- 22
MTZ625,A	MSC	213- 32
MTZ626,A	MSC	214-178
MTZ627,A	MSC	216-117
MTZ628,A	MSC	218- 14
MTZ629,A	MSC	219- 95
MTZ630,A	MSC	221- 29
MU2	SOIF	288-105
MU3	SOIF	289- 28
MU4	SOIF	289- 52
MU5	SOIF	289- 77
MU6	SOIF	289-110
MU10	SOIF	290- 80
MU20	SOIF	291- 37
MUS4987	♦MOTA	416- 14
MUS4988	♦MOTA	416- 15
MV7,A	TRW	537- 78
MV7E,A	TRW	537- 79
MV10,A	TRW	540- 59
MV10E	TRW	540- 60
MV12,A	TRW	543- 64
MV12A	SOD	377- 51
MV12B	SOD	377- 68
MV12C	SOD	377- 83
MV12E,A	TRW	543- 65
MV15,A	TRW	545- 16
MV15E	TRW	545- 17
MV16A	SOD	385- 92
MV16B	SOD	385- 95
MV16C	SOD	385-101
MV20,A⊠	TRW	548- 57
MV20A△	SOD	389- 41
MV20B	SOD	389- 83
MV20C	SOD	390- 6
MV20E,EA	TRW	548- 58
MV24A	SOD	391- 63
MV24B	SOD	391- 70
MV24C	SOD	391- 78
MV27,A	TRW	552- 44
MV27E	TRW	552- 45
MV28A	SOD	393- 14
MV28B	SOD	393- 17
MV28C	SOD	393- 25
MV32A	SOD	395- 7
MV32B	SOD	395- 10
MV32C	SOD	395- 12
MV33,A	TRW	553- 76
MV33E	TRW	553- 77
MV36A	SOD	395- 92
MV36B	SOD	395- 98
MV36C	SOD	395-100
MV39,A	TRW	556- 6
MV39E	TRW	556- 7
MV40A	SOD	396- 72
MV40B	SOD	396- 96
MV40C	SOD	397- 9
MV47,A	TRW	557- 13
MV47E	TRW	557- 14
MV56,A	TRW	559- 31
MV56E	TRW	559- 32
MV68,A	TRW	560- 35
MV82,A	TRW	561- 35
MV100,A	TRW	562- 2
MV830	CRY	545- 18
	KSC	♦MOTA
MV831	CRY	547-109
	KSC	♦MOTA
MV832	CRY	549- 87
	KSC	♦MOTA
MV833	CRY	552- 46
	KSC	♦MOTA
MV834	CRY	553- 78
	KSC	♦MOTA
MV835	CRY	556- 8
	KSC	♦MOTA
MV836	CRY	557- 15
	KSC	♦MOTA
MV837	CRY	559- 33
	KSC	♦MOTA
MV838	CRY	560- 36
	KSC	♦MOTA
MV839	CRY	561- 36
	KSC	♦MOTA
MV840	CRY	562- 3
	KSC	♦MOTA
MV1401	♦MOTA	563- 42
MV1403	♦MOTA	562- 84
MV1404	♦MOTA	562- 60
MV1405	♦MOTA	562- 99
MV1620	♦MOTA	536- 74
MV1622	♦MOTA	539- 31
MV1624	♦MOTA	540- 61
MV1626	♦MOTA	543- 66
MV1628	♦MOTA	545- 19
MV1630	♦MOTA	547-110
MV1632	♦MOTA	548- 59
MV1634	♦MOTA	549- 88
MV1636	♦MOTA	552- 47
MV1638	♦MOTA	553- 79
MV1640	♦MOTA	556- 9
MV1642	♦MOTA	557- 16
MV1644	♦MOTA	559- 34
MV1646	♦MOTA	560- 37
MV1648	♦MOTA	561- 37
MV1650	♦MOTA	562- 4
MV1652	♦MOTA	562- 62
	♦MSI	
MV1654	♦MOTA	562- 69
	♦MSI	
MV1656	♦MOTA	562- 88
	♦MSI	
MV1658	♦MOTA	562- 92
	♦MSI	
MV1660	♦MOTA	562- 95
	♦MSI	
MV1662	♦MOTA	562-100
	♦MSI	
MV1664	♦MOTA	563- 7
	♦MSI	
MV1666	♦MOTA	563- 14
	♦MSI	
MV1716,A	MSI	532- 15
MV1717,A	MSI	533- 40
MV1718,A	MSI	534- 2
MV1719,A	MSI	535- 14
MV1720	MSI	560- 38
MV1720A	MSI	536- 75
MV1722	MSI	539- 32
MV1722A	MSI	539- 33
MV1724	MSI	540- 62
MV1724A	MSI	540- 63
MV1726	MSI	543- 67
MV1726A	MSI	543- 68
MV1728	MSI	545- 20
MV1728A	MSI	545- 21
MV1730	MSI	548- 1
MV1730A	MSI	548- 2
MV1732	MSI	548- 60
MV1734	MSI	549- 89
MV1734A	MSI	549- 90
MV1736	MSI	552- 48
MV1736A	MSI	552- 49
MV1738	MSI	553- 80
MV1738A	MSI	553- 81
MV1740	MSI	556- 10
MV1740A	MSI	556- 11
MV1742	MSI	557- 17
MV1742A	MSI	557- 18
MV1744	MSI	559- 35
MV1744A	MSI	559- 36
MV1746	MSI	560- 39
MV1746A	MSI	560- 40
MV1748	MSI	561- 38
MV1748A	MSI	561- 39
MV1750	MSI	562- 5
MV1750A	MSI	562- 6
MV1805C	♦MOTA	551- 83
MV1809C1	♦MOTA	544- 18
MV1809C	♦MOTA	544- 38
MV1816A1	♦MOTA	533- 20
MV1816A	♦MOTA	533- 43
MV1816B1	♦MOTA	533- 19
MV1816B	♦MOTA	533- 42
MV1817A1	♦MOTA	528- 95
MV1817A	♦MOTA	528-104
MV1817B1	♦MOTA	528- 24
MV1817B	♦MOTA	528- 96
MV1858A	♦MOTA	527-109
MV1858B	CRY	527-110
	♦MOTA	
MV1858D	CRY	528- 1
	♦MOTA	
MV1860A	♦MOTA	531- 39

△-Registered with JEDEC by this manufacturer

♦-Copy of mfr's data sheet may be ordered from D.A.T.A.

1. TYPE No. CROSS INDEX

IN TYPE NUMBER SEQUENCE

TYPE No.	MFRS	Pg&Line
MV1860B	CRY	531- 40
	♦ MOTA	
MV1860D	CRY	531- 41
	♦ MOTA	
MV1862A	♦ MOTA	533- 5
MV1862B	CRY	533- 6
	♦ MOTA	
MV1862D	CRY	533- 7
	♦ MOTA	
MV1863A	♦ MOTA	534- 42
MV1863B	CRY	534- 43
	♦ MOTA	
MV1863D	CRY	534- 44
	♦ MOTA	
MV1864A	♦ MOTA	536- 76
MV1864B	CRY	536- 77
	♦ MOTA	
MV1864D	CRY	536- 78
	♦ MOTA	
MV1865A	♦ MOTA	539- 34
MV1865B	CRY	539- 35
	♦ MOTA	
MV1865D	CRY	539- 36
	♦ MOTA	
MV1866A	♦ MOTA	540- 64
MV1866B	CRY	540- 65
	♦ MOTA	
MV1866D	CRY	540- 66
	♦ MOTA	
MV1868A	♦ MOTA	543- 69
MV1868B	CRY	543- 70
	♦ MOTA	
MV1868D	CRY	543- 71
	♦ MOTA	
MV1870A	♦ MOTA	545- 22
MV1870B	CRY	545- 23
	♦ MOTA	
MV1870D	CRY	545- 24
	♦ MOTA	
MV1872	♦ MOTA	549- 91
MV1876	♦ MOTA	553- 82
MV2101	♦ MOTA	536- 79
MV2102	♦ MOTA	539- 37
MV2103	♦ MOTA	540- 67
MV2104	♦ MOTA	543- 72
MV2105	♦ MOTA	545- 25
MV2106	♦ MOTA	548- 3
MV2107	♦ MOTA	549- 92
MV2108	♦ MOTA	552- 50
MV2109	♦ MOTA	553- 83
MV2110	♦ MOTA	556- 12
MV2111	♦ MOTA	557- 19
MV2112	♦ MOTA	559- 37
MV2113	♦ MOTA	560- 41
MV2114	♦ MOTA	561- 40
MV2115	♦ MOTA	562- 7
MV2201	♦ MOTA	536- 22
MV2203	♦ MOTA	540- 68
MV2205	♦ MOTA	545- 26
MV2209	♦ MOTA	553- 84
MV2301	♦ MOTA	562- 63
MV2302	♦ MOTA	562- 70
MV2303	♦ MOTA	562- 89
MV2304	♦ MOTA	562- 93
MV2305	♦ MOTA	562- 96
MV2306	♦ MOTA	562-101
MV2307	♦ MOTA	563- 8
MV2308	♦ MOTA	563- 15
MV3047	MITJ	557- 20
MV3100	MITJ	562- 8
MV6113	MITJ	549- 93
MV6114	MITJ	557- 21
MV8152	MITJ	520- 11
MV8152A	MITJ	520- 12
MV8153D	MITJ	521- 80
MV8203C	MITJ	521- 81
MV8203D	MITJ	521- 82
MV8207C	MITJ	526- 9
MV8253A	MITJ	521- 83
MV8253C	MITJ	521- 84
MV8253D	MITJ	521- 85
MV8303A	MITJ	521- 86
MV8303C	MITJ	521- 87
MV8303D	MITJ	521- 88
MV9051	MITJ	534- 80
MV9052	MITJ	534- 81
MV9151	MITJ	544- 60
MV9152	MITJ	545- 27
MV9251	MITJ	551- 72
MV9252	MITJ	551- 74
MV9351	MITJ	555- 70
MV9352	MITJ	555- 74
MVB6116	MITJ	549- 94
MVB6117	MITJ	557- 22
MVB6118	MITJ	558-109
MVE6003	MITJ	532- 46
MVE6005	MITJ	534- 94
MVE6115	MITJ	540- 69
MVE6117	MITJ	557- 23
MVE6118	MITJ	558-110
MZ3 9T20,10,5	INRB	168-148
INRC	INRI	
	INRJ	
MZ4 3T20,10,5	INRB	169-146
INRC	INRI	
	INRJ	
MZ4.7T20,10,5	INRB	170-152
INRC	INRI	
	INRJ	
MZ5A	SOIF	172-127
MZ5 1T20,10,5	INRB	171-192
INRC	INRI	
	INRJ	

TYPE No.	MFRS	Pg&Line
MZ5 6T20,10,5	INRB	173- 62
INRC	INRI	
	INRJ	
MZ6A	SOIF	177- 8
MZ6.2T20,10,5	INRB	175- 36
INRC	INRI	
	INRJ	
MZ6.8T20,10,5	INRB	177-142
INRC	INRI	
	INRJ	
MZ7 5T20,10,5	INRB	180- 9
INRC	INRI	
	INRJ	
MZ8A	SOIF	181-114
MZ8 2T20,10,5	INRB	182- 56
INRC	INRI	
	INRJ	
MZ9 1T20,10,5	INRB	185-167
INRC	INRI	
	INRJ	
MZ10A	SOIF	187-107
MZ10B	SOIF	233- 6
MZ10T20,10,5	INRB	188- 60
INRC	INRI	
	INRJ	
MZ11T20,10,5	INRB	190- 60
INRC	INRI	
	INRJ	
MZ12A	SOIF	191-192
MZ12B	SOIF	236- 6
MZ12T20,10,5	INRB	192-128
INRC	INRI	
	INRJ	
MZ13T20,10,5	INRB	194-187
INRC	INRI	
	INRJ	
MZ15A	SOIF	197- 24
MZ15B	SOIF	239- 19
MZ15T20,10,5	INRB	197-146
INRC	INRI	
	INRJ	
MZ16T20,10,5	INRB	199-138
INRC	INRI	
	INRJ	
MZ18A	SOIF	201-107
MZ18B	SOIF	241-151
MZ18T20,10,5	INRB	202- 53
INRC	INRI	
	INRJ	
MZ20T20,10,5	INRB	205- 7
INRC	INRI	
	INRJ	
MZ22A	SOIF	206- 52
MZ22T20,10,5	INRB	206-166
INRC	INRI	
	INRJ	
MZ24T20,10,5	INRB	208-156
INRC	INRI	
	INRJ	
MZ27A	SOIF	210-118
MZ27T20,10,5	INRB	211- 48
INRC	INRI	
	INRJ	
MZ30T20,10,5	INRB	213- 56
INRC	INRI	
	INRJ	
MZ33A	SOIF	214-105
MZ39A	SOIF	217-143
MZ47A	SOIF	220-169
MZ56A	SOIF	224- 19
MZ68A	SOIF	227- 27
MZ82A	SOIF	230- 27
MZ92-2 4	♦ MOTA	165-179
MZ92-2 5	♦ MOTA	165-192
MZ92-2 7	♦ MOTA	166- 53
MZ92-2 8	♦ MOTA	166- 73
MZ92-3 0	♦ MOTA	166-131
MZ92-3 3	♦ MOTA	167- 32
MZ92-3 6	♦ MOTA	167-179
MZ92-3 9	♦ MOTA	168-135
MZ92-4 3	♦ MOTA	169-131
MZ92-4 7	♦ MOTA	170-134
MZ92-5 1	♦ MOTA	171-177
MZ92-5 6	♦ MOTA	173- 44
MZ92-6 0	♦ MOTA	174- 5
MZ92-6.2	♦ MOTA	175- 17
MZ92-6 8	♦ MOTA	177-115
MZ92-7 5	♦ MOTA	179-163
MZ92-8 2	♦ MOTA	182- 30
MZ92-8 7	♦ MOTA	184- 53
MZ92-9 1	♦ MOTA	185-142
MZ92-10	♦ MOTA	188- 30
MZ92-11	♦ MOTA	190- 36
MZ92-12	♦ MOTA	192-101
MZ92-13	♦ MOTA	194-162
MZ92-14	♦ MOTA	196- 65
MZ92-15	♦ MOTA	197-119
MZ92-16	♦ MOTA	199-113
MZ92-17	♦ MOTA	201- 18
MZ92-18	♦ MOTA	202- 26
MZ92-19	♦ MOTA	203-155
MZ92-20	♦ MOTA	204-167
MZ92-22	♦ MOTA	206-140
MZ92-24	♦ MOTA	208-130
MZ92-25	♦ MOTA	210- 27
MZ92-27	♦ MOTA	211- 23
MZ92-28	♦ MOTA	212-114
MZ92-30	♦ MOTA	213- 33
MZ92-33	♦ MOTA	214-179
MZ92-36	♦ MOTA	216-118
MZ92-39	♦ MOTA	218- 15
MZ92-43	♦ MOTA	219- 96
MZ92-47	♦ MOTA	221- 30
MZ92-51	♦ MOTA	222-169

TYPE No.	MFRS	Pg&Line
MZ92-56	♦ MOTA	224- 63
MZ92-60	♦ MOTA	225-116
MZ92-62	♦ MOTA	226- 19
MZ92-68	♦ MOTA	227- 72
MZ92-75	♦ MOTA	228-170
MZ92-82	♦ MOTA	230- 68
MZ92-87	♦ MOTA	231- 92
MZ92-91	♦ MOTA	232- 12
MZ92-100	♦ MOTA	233- 47
MZ92-110	♦ MOTA	235- 20
MZ92-120	♦ MOTA	236- 43
MZ92-130	♦ MOTA	237- 83
MZ92-140	♦ MOTA	238- 96
MZ92-150	♦ MOTA	239- 56
MZ92-160	♦ MOTA	240- 88
MZ92-170	♦ MOTA	241- 56
MZ92-180	♦ MOTA	242- 24
MZ92-190	♦ MOTA	242-179
MZ92-200	♦ MOTA	243- 66
MZ110	MSC	233-144
MZ111	MSC	235-100
MZ112	MSC	236-131
MZ113	MSC	237-161
MZ114	MSC	238-135
MZ115	MSC	239-144
MZ116	MSC	240-159
MZ117	MSC	241- 65
MZ118	MSC	242-105
MZ119	MSC	243- 6
MZ120	MSC	243-143
MZ122	MSC	244- 54
MZ124	MSC	244- 74
MZ126	MSC	244- 89
MZ127	MSC	244-107
MZ128	MSC	244-113
MZ130	MSC	244-127
MZ132	MSC	244-142
MZ133	MSC	244-160
MZ134	MSC	244-166
MZ136	MSC	244-180
MZ138	MSC	244-195
MZ139	MSC	245- 7
MZ140	MSC	245- 18
MZ210	MSC	233-145
MZ211	MSC	235-101
MZ212	MSC	236-132
MZ213	MSC	237-162
MZ214	MSC	238-136
MZ215	MSC	239-145
MZ216	MSC	240-160
MZ217	MSC	241- 66
MZ218	MSC	242-106
MZ219	MSC	243- 7
MZ220	MSC	243-144
MZ222	MSC	244- 55
MZ224	MSC	244- 75
MZ226	MSC	244- 90
MZ227	MSC	244-108
MZ228	MSC	244-114
MZ230	MSC	244-128
MZ232	MSC	244-143
MZ233	MSC	244-161
MZ234	MSC	244-167
MZ236	MSC	244-181
MZ238	MSC	244-196
MZ239	MSC	245- 8
MZ240	MSC	245- 19
MZ310	MSC	233-146
MZ311	MSC	235-102
MZ312	MSC	236-133
MZ313	MSC	237-163
MZ314	MSC	238-137
MZ315	MSC	239-146
MZ316	MSC	240-161
MZ317	MSC	241- 67
MZ318	MSC	242-107
MZ319	MSC	243- 8
MZ320	MSC	243-145
MZ322	MSC	244- 56
MZ324	MSC	244- 76
MZ326	MSC	244- 91
MZ327	MSC	244-109
MZ328	MSC	244-115
MZ330	MSC	244-129
MZ332	MSC	244-144
MZ333	MSC	244-162
MZ334	MSC	244-168
MZ336	MSC	244-182
MZ338	MSC	244-197
MZ339	MSC	245- 9
MZ340	MSC	245- 20
MZ500-1	♦ MOTA	165-174
MZ500-2	♦ MOTA	166- 44
MZ500-3	♦ MOTA	166-120
MZ500-4	♦ MOTA	167- 17
MZ500-5	♦ MOTA	167-167
MZ500-6	♦ MOTA	168-119
MZ500-7	♦ MOTA	169-119
MZ500-8	♦ MOTA	170-118
MZ500-9	♦ MOTA	171-164
MZ500-10	♦ MOTA	173- 6
MZ500-11	♦ MOTA	175- 2
MZ500-12	♦ MOTA	177- 97
MZ500-13	♦ MOTA	179-146
MZ500-14	♦ MOTA	182- 12
MZ500-15	♦ MOTA	185-126
MZ500-16	♦ MOTA	188- 10
MZ500-17	♦ MOTA	190- 22
MZ500-18	♦ MOTA	192- 79
MZ500-19	♦ MOTA	194-148
MZ500-20	♦ MOTA	197- 99
MZ500-21	♦ MOTA	199- 99
MZ500-22	♦ MOTA	202- 6
MZ500-23	♦ MOTA	204-152

TYPE No.	MFRS	Pg&Line
MZ500-24	♦ MOTA	206-121
MZ500-25	♦ MOTA	208-117
MZ500-26	♦ MOTA	211- 8
MZ500-27	♦ MOTA	213- 23
MZ500-28	♦ MOTA	214-165
MZ500-29	♦ MOTA	216-111
MZ500-30	♦ MOTA	218- 4
MZ500-31	♦ MOTA	219- 89
MZ500-32	♦ MOTA	221- 19
MZ500-33	♦ MOTA	222-163
MZ500-34	♦ MOTA	224- 55
MZ500-35	♦ MOTA	226- 12
MZ500-36	♦ MOTA	227- 64
MZ500-37	♦ MOTA	228-164
MZ500-38	♦ MOTA	230- 59
MZ500-39	♦ MOTA	232- 6
MZ500-40	♦ MOTA	233- 38
MZ605	♦ MOTA	174- 30
MZ610	♦ MOTA	174- 31
MZ620	♦ MOTA	174- 32
MZ640	♦ MOTA	174- 33
MZ706	MSC	178- 81
MZ707	MSC	180-124
MZ708	MSC	182-177
MZ709	MSC	186-107
MZ710	MSC	189- 3
MZ711	MSC	190-185
MZ712	MSC	193- 92
MZ713	MSC	195-118
MZ714	MSC	196-116
MZ715	MSC	198- 93
MZ716	MSC	200- 65
MZ718	MSC	202-185
MZ720	MSC	205-123
MZ722	MSC	207-108
MZ724	MSC	209- 85
MZ727	MSC	211-175
MZ730	MSC	213-170
MZ733	MSC	215-140
MZ736	MSC	217- 35
MZ739	MSC	218-114
MZ740	MSC	219- 1
MZ743	MSC	220- 7
MZ745	MSC	220-114
MZ747	MSC	221-136
MZ750	MSC	222- 85
MZ751	MSC	223- 78
MZ756	MSC	224-165
MZ760	MSC	225-125
MZ762	MSC	226-109
MZ768	MSC	227-171
MZ770	MSC	228- 82
MZ775	MSC	229- 83
MZ780	MSC	229-194
MZ782	MSC	230-161
MZ790	MSC	231-124
MZ791	MSC	232- 94
MZ805	♦ MOTA	183- 87
MZ806	MSC	178- 82
MZ807	MSC	180-125
MZ808	MSC	182-178
MZ809	MSC	186-108
MZ810△	♦ MOTA	183- 88
MZ810⊘	MSC	189- 4
MZ811	MSC	190-186
MZ812	MSC	193- 93
MZ813	MSC	195-119
MZ814	MSC	196-117
MZ815	MSC	198- 94
MZ816	MSC	200- 66
MZ818	MSC	202-186
MZ820△	♦ MOTA	183- 89
MZ820⊘	MSC	205-124
MZ822	MSC	207-109
MZ824	MSC	209- 86
MZ827	MSC	211-176
MZ830	MSC	213-171
MZ833	MSC	215-141
MZ836	MSC	217- 36
MZ839	MSC	218-115
MZ840△	♦ MOTA	183- 90
MZ840⊘	MSC	219- 2
MZ843	MSC	220- 8
MZ845	MSC	220-115
MZ847	MSC	221-137
MZ850	MSC	222- 86
MZ851	MSC	223- 79
MZ856	MSC	224-166
MZ860	MSC	225-126
MZ862	MSC	226-110
MZ868	MSC	227-172
MZ870	MSC	228- 83
MZ875	MSC	229- 84
MZ880	MSC	229-195
MZ882	MSC	230-162
MZ890	MSC	231-125
MZ891	MSC	232- 95
MZ906	MSC	178- 83
MZ907	MSC	180-126
MZ908	MSC	182-179
MZ909	MSC	186-109
MZ910	MSC	189- 5
MZ911	MSC	190-187
MZ912	MSC	193- 94
MZ913	MSC	195-120
MZ914	MSC	196-118
MZ915	MSC	198- 95
MZ916	MSC	200- 67
MZ918	MSC	202-187
MZ920	MSC	205-125
MZ922	MSC	207-110
MZ924	MSC	209- 87
MZ927	MSC	211-177
MZ930	MSC	213-172

TYPE No.	MFRS	Pg&Line
MZ933	MSC	215-142
MZ936	MSC	217- 37
MZ939	MSC	218-116
MZ940	MSC	219- 3
MZ943	MSC	220- 9
MZ945	MSC	220-116
MZ947	MSC	221-138
MZ950	MSC	222- 87
MZ951	MSC	223- 80
MZ956	MSC	224-167
MZ960	MSC	225-127
MZ962	MSC	226-111
MZ968	MSC	227-173
MZ970	MSC	228- 84
MZ975	MSC	229- 85
MZ980	MSC	229-196
MZ982	MSC	230-163
MZ990	MSC	231-126
MZ991	MSC	232- 96
MZ1000-1	♦ MOTA	167- 67
MZ1000-2	♦ MOTA	168- 27
MZ1000-3	♦ MOTA	168-185
MZ1000-4	♦ MOTA	169-181
MZ1000-5	♦ MOTA	170-192
MZ1000-6	♦ MOTA	172- 32
MZ1000-7	♦ MOTA	173-108
MZ1000-8	♦ MOTA	175- 85
MZ1000-9	♦ MOTA	178- 56
MZ1000-10	♦ MOTA	180- 98
MZ1000-11	♦ MOTA	182-151
MZ1000-12	♦ MOTA	186- 80
MZ1000-13	♦ MOTA	188-168
MZ1000-14	♦ MOTA	190-151
MZ1000-15	♦ MOTA	193- 61
MZ1000-16	♦ MOTA	195- 90
MZ1000-17	♦ MOTA	198- 63
MZ1000-18	♦ MOTA	200- 39
MZ1000-19	♦ MOTA	202-154
MZ1000-20	♦ MOTA	205- 94
MZ1000-21	♦ MOTA	207- 79
MZ1000-22	♦ MOTA	209- 57
MZ1000-23	♦ MOTA	211-145
MZ1000-24	♦ MOTA	213-140
MZ1000-25	♦ MOTA	215-109
MZ1000-26	♦ MOTA	217- 16
MZ1000-27	♦ MOTA	218- 97
MZ1000-28	♦ MOTA	219-174
MZ1000-29	♦ MOTA	221-119
MZ1000-30	♦ MOTA	223- 60
MZ1000-31	♦ MOTA	224-147
MZ1000-32	♦ MOTA	226- 91
MZ1000-33	♦ MOTA	227-152
MZ1000-34	♦ MOTA	229- 65
MZ1000-35	♦ MOTA	231- 71
MZ1000-36	♦ MOTA	232- 77
MZ1000-37	♦ MOTA	233-126
MZ1002	MITJ	165-113
MZ1003	MITJ	166- 87
MZ1004	MITJ	169- 31
MZ1005	MITJ	171- 67
MZ1006	MITJ	173-194
MZ1007	MITJ	178-172
MZ1008	MITJ	181- 53
MZ1009	MITJ	184-108
MZ1010	MITJ	187-108
MZ1012	MITJ	191-193
MZ1014	MITJ	196- 24
MZ1016	MITJ	199- 30
MZ1018	MITJ	201-108
MZ1020	MITJ	204- 85
MZ1022	MITJ	206- 53
MZ2360	♦ MOTA	165- 24
MZ2361	♦ MOTA	165- 57
MZ4614	♦ MOTA	165- 92
MZ4615	♦ MOTA	165-114
MZ4616	♦ MOTA	165-134
MZ4617	♦ MOTA	165-155
MZ4618	♦ MOTA	166- 17
MZ4619	♦ MOTA	166- 88
MZ4620	♦ MOTA	166-165
MZ4621	♦ MOTA	167-122
MZ4622	♦ MOTA	168- 76
MZ4623	♦ MOTA	169- 72
MZ4624	♦ MOTA	170- 63
MZ4625	♦ MOTA	171-108
MZ4626	♦ MOTA	172-128
MZ4627	♦ MOTA	174-118
MZ5110	MSC	233-169
MZ5111	MSC	235-118
MZ5112	MSC	236-151
MZ5113	MSC	238- 9
MZ5114	MSC	238-149
MZ5115	MSC	239-164
MZ5116	MSC	241- 7
MZ5117	MSC	241- 75
MZ5118	MSC	242-124
MZ5119	MSC	243- 16
MZ5120	MSC	243-161
MZ5122	MSC	244- 62
MZ5124	MSC	244- 82
MZ5126	MSC	244- 96
MZ5128	MSC	244-120
MZ5130	MSC	244-135
MZ5132	MSC	244-149
MZ5134	MSC	244-173
MZ5136	MSC	244-188
MZ5138	MSC	244-202
MZ5140	MSC	245- 25
MZ5210	MSC	233-170
MZ5211	MSC	235-119
MZ5212	MSC	236-152
MZ5213	MSC	238- 10
MZ5214	MSC	238-150
MZ5215	MSC	239-165

△-Registered with JEDEC by this manufacturer

♦-Copy of mfr's data sheet may be ordered from D.A.T.A.

1. TYPE No. CROSS INDEX

IN TYPE NUMBER SEQUENCE

TYPE No.	MFRS	Pg&Line	TYPE No.	MFRS	Pg&Line	TYPE No.	MFRS	Pg&Line	TYPE No.	MFRS	Pg&Line	TYPE No.	MFRS	Pg&Line
MZ5216	MSC	241- 8	MZ5975	MSC	229-108	MZC150B10	♦MOTA	239- 51	NL556A	♦NAT	429- 96	NLC501PS	♦NAT	494- 47
MZ5217	MSC	241- 76	MZ5980	MSC	230- 4	MZC160A10	♦MOTA	240- 84	NL556B	♦NAT	440- 38	NLC501S	♦NAT	473- 48
MZ5218	MSC	242-125	MZ5990	MSC	231-135	MZC160B10	♦MOTA	240- 85	NL556C	♦NAT	448- 56	NLC501T	♦NAT	481- 81
MZ5219	MSC	243- 17	MZC1.8B10	♦MOTA	165- 99	MZC170A10	♦MOTA	241- 52	NL556D	♦NAT	456-106	NLE45B	NAT	437- 49
MZ5220	MSC	243-162	MZC2.0B10	♦MOTA	165-121	MZC170B10	♦MOTA	241- 53	NL556E	♦NAT	466- 87	NLE45C	NAT	445- 60
MZ5222	MSC	244- 63	MZC2.2B10	♦MOTA	165-141	MZC180A10	♦MOTA	242- 18	NL556F	♦NAT	422- 62	NLE45D	NAT	453- 55
MZ5224	MSC	244- 83	MZC2.4A10	♦MOTA	165-175	MZC180B10	♦MOTA	242- 19	NL556G	♦NAT	431-100	NLE45E	NAT	459-109
MZ5226	MSC	244- 97	MZC2.4B10	♦MOTA	165-176	MZC190A10	♦MOTA	242-175	NL556H	♦NAT	445- 81	NLE45M	NAT	466- 64
MZ5228	MSC	244-121	MZC2.5A10	♦MOTA	165-189	MZC190B10	♦MOTA	242-176	NL556M	♦NAT	473- 69	NLE45N	NAT	476- 5
MZ5230	MSC	244-136	MZC2.7A10	♦MOTA	166- 45	MZC200A10	♦MOTA	243- 61	NL556N	♦NAT	481-105	NLE45S	NAT	471- 77
MZ5232	MSC	244-150	MZC2.7B10	♦MOTA	166- 46	MZC200B10	♦MOTA	243- 62	NL556P	♦NAT	488- 27	NLE45T	NAT	480- 16
MZ5234	MSC	244-174	MZC2 8A10	♦MOTA	166- 70	N120CG6	CRL	580- 1	NL556PA	♦NAT	490- 79	NLE46B	NAT	437- 50
MZ5236	MSC	244-189	MZC3 0A10	♦MOTA	166-121	N120CG7	CRL	580- 2	NL556PB	♦NAT	492- 1	NLE46C	NAT	437- 51
MZ5238	MSC	244-203	MZC3.0B10	♦MOTA	166-122	N120CG8	♦CRL	580- 3	NL556PC	♦NAT	493- 7	NLE46D	NAT	453- 56
MZ5240	MSC	245- 26	MZC3.3A10	♦MOTA	167- 18	N120CG9	♦CRL	580- 4	NL556S	♦NAT	479- 50	NLE46E	NAT	459-110
MZ5310	MSC	233-171	MZC3 3B10	♦MOTA	167- 19	N120CG10	♦CRL	580- 5	NL556T	♦NAT	483- 7	NLE46M	NAT	466- 65
MZ5311	MSC	235-120	MZC3.6A10	♦MOTA	167-168	N120CG11	♦CRL	580- 6	NL570A	NAT	427- 87	NLE46N	NAT	476- 6
MZ5312	MSC	236-153	MZC3.6B10	♦MOTA	167-169	N120CG12	CRL	580- 7	NL570B	NAT	437- 18	NLE46S	NAT	471- 78
MZ5313	MSC	238- 11	MZC3.9A10	♦MOTA	168-120	N210CG6	CRL	580- 8	NL570C	NAT	445- 29	NLE46T	NAT	480- 17
MZ5314	MSC	238-151	MZC3.9B10	♦MOTA	168-121	N210CG7	CRL	580- 9	NL570D	NAT	453- 17	NLE150B	♦NAT	438- 72
MZ5315	MSC	239-166	MZC4 3A10	♦MOTA	169-120	N210CG8	♦CRL	580- 10	NL570E	NAT	459- 81	NLE150C	♦NAT	446- 67
MZ5316	MSC	241- 9	MZC4.3B10	♦MOTA	169-121	N210CG9	♦CRL	580- 11	NL570M	NAT	466- 25	NLE150D	♦NAT	454- 95
MZ5317	MSC	241- 77	MZC4 7A10	♦MOTA	170-119	N210CG10	♦CRL	580- 12	NL576B	NAT	437- 69	NLE150E	♦NAT	461- 17
MZ5318	MSC	242-126	MZC4 7B10	♦MOTA	170-120	N210CG11	♦CRL	580- 13	NL576C	NAT	445- 74	NLE150M	♦NAT	468- 41
MZ5319	MSC	243- 18	MZC5.1A10	♦MOTA	171-165	N210CG12	CRL	580- 14	NL576D	NAT	453- 75	NLE150N	♦NAT	477- 43
MZ5320	MSC	243-163	MZC5.1B10	♦MOTA	171-166	N220CG8	♦CRL	580- 15	NL576E	NAT	460- 9	NLE150P	♦NAT	484- 6
MZ5322	MSC	244- 64	MZC5 6A10	♦MOTA	173- 7	N220CG9	♦CRL	580- 16	NL576M	NAT	466- 80	NLE150S	♦NAT	472- 61
MZ5324	MSC	244- 84	MZC5.6B10	♦MOTA	173- 8	N220CG10	♦CRL	580- 17	NL576N	NAT	476- 19	NLE150T	♦NAT	480-100
MZ5326	MSC	244- 98	MZC6.0A10	♦MOTA	174- 1	N220CG11	♦CRL	580- 18	NL576P	NAT	483- 2	NLE151E	NAT	461- 1
MZ5328	MSC	244-122	MZC6.2A10	♦MOTA	175- 3	N220CG12	CRL	580- 19	NL576PA	NAT	486- 21	NLE151M	NAT	468- 20
MZ5330	MSC	244-137	MZC6 2B10	♦MOTA	175- 4	N230CG8	CRL	580- 20	NL576PB	NAT	488- 24	NLE151N	NAT	477- 29
MZ5332	MSC	244-151	MZC6.8A10	♦MOTA	177- 98	N230CG9	CRL	580- 21	NL577B	NAT	437- 70	NLE151P	NAT	483-100
MZ5334	MSC	244-175	MZC6.8B10	♦MOTA	177- 99	N230CG10	CRL	580- 22	NL577C	NAT	445- 75	NLE151S	NAT	472- 55
MZ5336	MSC	244-190	MZC7 5A10	♦MOTA	179-147	N230CG11	CRL	580- 23	NL577D	NAT	453- 76	NLE151T	NAT	480- 94
MZ5338	MSC	245- 1	MZC7.5B10	♦MOTA	179-148	N230CG12	CRL	580- 24	NL577E	NAT	460- 10	NLE152B	♦NAT	438- 73
MZ5340	MSC	245- 27	MZC8.2A10	♦MOTA	182- 13	N240CG8	♦CRL	580- 25	NL577M	NAT	466- 81	NLE152C	♦NAT	446- 68
MZ5706	MSC	178-103	MZC8.2B10	♦MOTA	182- 14	N240CG9	♦CRL	580- 26	NL577N	NAT	476- 20	NLE152D	♦NAT	454- 96
MZ5707	MSC	180-146	MZC8 7A10	♦MOTA	184- 49	N240CG10	♦CRL	580- 27	NL577P	NAT	483- 3	NLE152E	NAT	461- 18
MZ5708	MSC	183- 14	MZC8.7B10	♦MOTA	184- 50	N240CG11	♦CRL	580- 28	NL577PA	NAT	486- 22	NLE152M	NAT	468- 42
MZ5709	MSC	186-130	MZC9 1A10	♦MOTA	185-127	N260CG8	♦CRL	580- 29	NL577PB	NAT	488- 25	NLE152N	♦NAT	477- 44
MZ5710	MSC	189- 28	MZC9 1B10	♦MOTA	185-128	N260CG9	♦CRL	580- 30	NL577S	NAT	471- 84	NLE152P	♦NAT	484- 7
MZ5712	MSC	193-118	MZC10A10	♦MOTA	188- 11	N260CG10	♦CRL	580- 31	NL577T	NAT	480- 21	NLE152S	♦NAT	472- 62
MZ5713	MSC	195-141	MZC10B10	♦MOTA	188- 12	N260CG11	♦CRL	580- 32	NLC38A	♦NAT	427- 92	NLE152T	♦NAT	480-101
MZ5714	MSC	196-133	MZC11A10	♦MOTA	190- 23	NCF020C	TNC	415- 17	NLC38B	♦NAT	437- 23	NLE153E	♦NAT	461- 2
MZ5715	MSC	198-118	MZC11B10	♦MOTA	190- 24	NCF020D	♦TNC	414- 75	NLC38C	♦NAT	445- 34	NLE153M	♦NAT	468- 21
MZ5716	MSC	200- 84	MZC12A10	♦MOTA	192- 80	NCF050C	TNC	419- 14	NLC38D	♦NAT	453- 22	NLE153N	NAT	477- 30
MZ5718	MSC	203- 10	MZC12B10	♦MOTA	192- 81	NCF050D	♦TNC	419- 60	NLC38E	♦NAT	459- 88	NLE153P	NAT	483-101
MZ5720	MSC	205-147	MZC13A10	♦MOTA	194-149	NCF100C	TNC	425- 36	NLC38F	♦NAT	420- 61	NLE153S	NAT	472- 58
MZ5722	MSC	207-133	MZC13B10	♦MOTA	194-150	NCF100D	♦TNC	425-110	NLC38G	♦NAT	431- 12	NLE153T	NAT	480- 95
MZ5724	MSC	209-108	MZC14A10	♦MOTA	196- 60	NCF150C	TNC	430- 84	NLC38H	♦NAT	441- 32	NLE155A	NAT	428- 73
MZ5727	MSC	212- 4	MZC14B10	♦MOTA	196- 61	NCF150D	♦TNC	430- 91	NLC38U	♦NAT	415- 74	NLE155B	NAT	438- 54
MZ5730	MSC	214- 8	MZC15A10	♦MOTA	197-100	NCF200C	TNC	434- 54	NLC60E	♦NAT	460- 41	NLE155C	NAT	446- 57
MZ5733	MSC	215-165	MZC15B10	♦MOTA	197-101	NCF200D	♦TNC	435- 31	NLC62A	♦NAT	428- 85	NLE155D	NAT	454- 77
MZ5736	MSC	217- 58	MZC16A10	♦MOTA	199-100	NCF250C	TNC	440-104	NLC62B	♦NAT	438- 78	NLE155E	NAT	461- 5
MZ5740	MSC	219- 10	MZC16B10	♦MOTA	199-101	NCF250D	♦TNC	441- 1	NLC62C	♦NAT	446- 73	NLE157A	NAT	428- 74
MZ5745	MSC	220-127	MZC17A10	♦MOTA	201- 13	NCF300C	TNC	443- 50	NLC62D	♦NAT	454-101	NLE157B	NAT	438- 55
MZ5750	MSC	222- 98	MZC17B10	♦MOTA	201- 14	NCF300D	♦TNC	443- 99	NLC62E	♦NAT	461- 25	NLE157C	NAT	446- 58
MZ5756	MSC	225- 7	MZC18A10	♦MOTA	202- 7	NCF400C	TNC	450- 50	NLC62F	♦NAT	420- 87	NLE157D	NAT	454- 78
MZ5760	MSC	225-138	MZC18B10	♦MOTA	202- 8	NCF400D	♦TNC	451- 30	NLC62G	♦NAT	431- 69	NLE157E	NAT	461- 6
MZ5770	MSC	228- 91	MZC19A10	♦MOTA	203-148	NCF500C	TNC	457- 87	NLC62H	♦NAT	441- 90	NLF45B	NAT	440- 39
MZ5775	MSC	229-106	MZC19B10	♦MOTA	203-149	NCF500D	♦TNC	458- 25	NLC62U	♦NAT	415- 83	NLF45C	NAT	448- 57
MZ5780	MSC	230- 2	MZC20A10	♦MOTA	204-153	NCF600C	TNC	463- 83	NLC150E	♦NAT	461- 21	NLF45D	NAT	456-107
MZ5790	MSC	231-133	MZC20B10	♦MOTA	204-154	NCF600D	♦TNC	464- 43	NLC150M	♦NAT	468- 49	NLF45E	NAT	466- 88
MZ5806	MSC	178-104	MZC22A10	♦MOTA	206-122	NCM050C	TNC	418- 48	NLC150N	♦NAT	477- 49	NLF45M	NAT	473- 70
MZ5807	MSC	180-147	MZC22B10	♦MOTA	206-123	NCM100C	TNC	424- 57	NLC150P	♦NAT	484- 14	NLF45N	NAT	481-106
MZ5808	MSC	183- 15	MZC24A10	♦MOTA	208-118	NCM100E	♦TNC	426- 1	NLC150PA	♦NAT	486- 83	NLF45S	NAT	479- 51
MZ5809	MSC	186-131	MZC24B10	♦MOTA	208-119	NCM200C	TNC	433- 63	NLC150PB	♦NAT	489- 8	NLF45T	NAT	483- 8
MZ5810	MSC	189- 29	MZC25A10	♦MOTA	210- 23	NCM200E	♦TNC	435- 32	NLC150PC	♦NAT	491- 18	NLF46B	NAT	440- 40
MZ5812	MSC	193-119	MZC25B10	♦MOTA	210- 24	NCM300C	TNC	442-100	NLC150S	♦NAT	472- 67	NLF46C	NAT	448- 58
MZ5813	MSC	195-142	MZC27A10	♦MOTA	211- 9	NCM300E	♦TNC	443-100	NLC150T	♦NAT	480-106	NLF46D	NAT	456-108
MZ5814	MSC	196-134	MZC27B10	♦MOTA	211- 10	NCM400C	TNC	449- 69	NLC152E	♦NAT	461- 22	NLF46E	NAT	466- 89
MZ5815	MSC	198-119	MZC28A10	♦MOTA	212-110	NCM400E	♦TNC	451- 31	NLC152M	♦NAT	468- 50	NLF46M	NAT	473- 71
MZ5816	MSC	200- 85	MZC28B10	♦MOTA	212-111	NCM500C	TNC	457- 41	NLC152N	♦NAT	477- 50	NLF46N	NAT	481-107
MZ5818	MSC	203- 11	MZC30A10	♦MOTA	213- 24	NCM500E	♦TNC	458- 26	NLC152P	♦NAT	484- 15	NLF46S	NAT	479- 52
MZ5820	MSC	205-148	MZC30B10	♦MOTA	213- 25	NCM600C	TNC	463- 17	NLC152PA	♦NAT	486- 84	NLF46T	NAT	483- 9
MZ5822	MSC	207-134	MZC33A10	♦MOTA	214-166	NCM600E	♦TNC	464- 44	NLC152PB	♦NAT	489- 9	NLF150B	NAT	440- 48
MZ5824	MSC	209-109	MZC33B10	♦MOTA	214-167	NCM700C	TNC	470- 83	NLC152PC	♦NAT	491- 19	NLF150C	NAT	448- 66
MZ5827	MSC	212- 5	MZC36A10	♦MOTA	216-112	NCR020B	TNC	414-100	NLC152S	♦NAT	472- 68	NLF150D	NAT	457- 6
MZ5830	MSC	214- 9	MZC36B10	♦MOTA	216-113	NCR050B	TNC	418- 52	NLC152T	♦NAT	480-107	NLF150E	NAT	468- 43
MZ5833	MSC	215-166	MZC39A10	♦MOTA	218- 5	NCR100B	TNC	424- 61	NLC295A	NAT	429- 68	NLF150M	NAT	473- 79
MZ5836	MSC	217- 59	MZC39B10	♦MOTA	218- 6	NCR150B	TNC	430- 71	NLC295B	NAT	440- 8	NLF150N	NAT	482- 5
MZ5840	MSC	219- 11	MZC43A10	♦MOTA	219- 90	NCR200B	TNC	433- 67	NLC295C	NAT	447- 79	NLF150P	NAT	489- 4
MZ5845	MSC	220-128	MZC43B10	♦MOTA	219- 91	NCR250B	TNC	440- 95	NLC295D	NAT	456- 42	NLF150S	NAT	479- 57
MZ5850	MSC	222- 99	MZC47A10	♦MOTA	221- 20	NCR300B	TNC	442-104	NLC295E	NAT	462- 33	NLF150T	NAT	484- 8
MZ5856	MSC	225- 8	MZC47B10	♦MOTA	221- 21	NCR400B	TNC	449- 73	NLC295M	NAT	470- 22	NLF151E	NAT	461- 3
MZ5860	MSC	225-139	MZC51A10	♦MOTA	222-164	NCR500B	TNC	457- 45	NLC297A	NAT	429- 69	NLF151M	NAT	468- 22
MZ5870	MSC	228- 92	MZC51B10	♦MOTA	222-165	NCR600B	TNC	463- 22	NLC297B	NAT	440- 9	NLF151N	NAT	477- 31
MZ5875	MSC	229-107	MZC56A10	♦MOTA	224- 56	ND10	♦SCO	260- 63	NLC297C	NAT	447- 80	NLF151P	NAT	483-102
MZ5880	MSC	230- 3	MZC56B10	♦MOTA	224- 57	ND10A	♦SCO	260- 64	NLC297D	NAT	456- 43	NLF151PA	NAT	486- 80
MZ5890	MSC	231-134	MZC60A10	♦MOTA	225-112	ND20	♦SCO	261- 16	NLC297E	NAT	462- 34	NLF151S	NAT	472- 56
MZ5906	MSC	178-105	MZC60B10	♦MOTA	225-113	ND20A	♦SCO	261- 17	NLC297M	NAT	470- 23	NLF151T	NAT	480- 96
MZ5907	MSC	180-148	MZC62A10	♦MOTA	226- 13	ND30	♦SCO	261- 40	NLC350E	♦NAT	461- 23	NLF152B	NAT	440- 49
MZ5908	MSC	183- 16	MZC62B10	♦MOTA	226- 14	ND30A	♦SCO	261- 41	NLC350M	♦NAT	468- 51	NLF152C	NAT	448- 67
MZ5909	MSC	186-132	MZC68A10	♦MOTA	227- 65	ND40	♦SCO	261- 52	NLC350N	♦NAT	477- 51	NLF152D	NAT	457- 7
MZ5910	MSC	189- 30	MZC68B10	♦MOTA	227- 66	ND40A	♦SCO	261- 53	NLC350P	♦NAT	484- 16	NLF152E	NAT	468- 44
MZ5912	MSC	193-120	MZC75A10	♦MOTA	228-165	NL511-3	♦NAT	481- 99	NLC350PA	♦NAT	486- 85	NLF152M	NAT	473- 80
MZ5913	MSC	195-143	MZC75B10	♦MOTA	228-166	NL511-4	♦NAT	487- 79	NLC350PB	♦NAT	489- 10	NLF152N	NAT	482- 6
MZ5914	MSC	196-135	MZC82A10	♦MOTA	230- 60	NL511-6	♦NAT	491- 93	NLC350PC	♦NAT	491- 20	NLF152P	NAT	489- 5
MZ5915	MSC	198-120	MZC82B10	♦MOTA	230- 61	NL555A	♦NAT	429- 95	NLC350S	♦NAT	472- 69	NLF152S	NAT	479- 58
MZ5916	MSC	200- 86	MZC87A10	♦MOTA	231- 88	NL555B	♦NAT	440- 37	NLC350T	♦NAT	480-108	NLF152T	NAT	484- 9
MZ5918	MSC	203- 12	MZC87B10	♦MOTA	231- 89	NL555C	♦NAT	448- 55	NLC501A	♦NAT	429- 78	NLF153E	NAT	461- 4
MZ5920	MSC	205-149	MZC91A10	♦MOTA	232- 7	NL555D	♦NAT	456-105	NLC501B	♦NAT	440- 19	NLF153M	NAT	468- 23
MZ5922	MSC	207-135	MZC91B10	♦MOTA	232- 8	NL555E	♦NAT	466- 86	NLC501C	♦NAT	447- 90	NLF153N	NAT	477- 32
MZ5924	MSC	209-110	MZC100A10	♦MOTA	233- 39	NL555F	♦NAT	422- 61	NLC501D	♦NAT	456- 55	NLF153P	NAT	483-103
MZ5927	MSC	212- 6	MZC100B10	♦MOTA	233- 40	NL555G	♦NAT	431- 99	NLC501E	♦NAT	462- 47	NLF153S	NAT	472- 57
MZ5930	MSC	214- 10	MZC110A10	♦MOTA	235- 16	NL555H	♦NAT	445- 80	NLC501M	♦NAT	470- 37	NLF153T	NAT	480- 97
MZ5933	MSC	215-167	MZC110B10	♦MOTA	235- 17	NL555M	♦NAT	473- 68	NLC501N	♦NAT	479- 16	NLF154A	NAT	428- 75
MZ5936	MSC	217- 60	MZC120A10	♦MOTA	236- 36	NL555N	♦NAT	481-104	NLC501P	♦NAT	485- 58	NLF154B	NAT	438- 56
MZ5940	MSC	219- 12	MZC120B10	♦MOTA	236- 37	NL555P	♦NAT	488- 26	NLC501PA	♦NAT	487- 43	NLF154C	NAT	446- 59
MZ5945	MSC	220-129	MZC130A10	♦MOTA	237- 79	NL555PA	♦NAT	490- 78	NLC501PB	♦NAT	490- 27	NLF154D	NAT	454- 79
MZ5950	MSC	222-100	MZC130B10	♦MOTA	237- 80	NL555PB	♦NAT	491-107	NLC501PC	♦NAT	491- 79	NLF154E	NAT	461- 7
MZ5956	MSC	225- 9	MZC140A10	♦MOTA	238- 91	NL555PC	♦NAT	493- 6	NLC501PD	♦NAT	492-101	NLF155A	NAT	428- 76
MZ5960	MSC	225-140	MZC140B10	♦MOTA	238- 92	NL555S	♦NAT	479- 49	NLC501PE	♦NAT	493- 39	NLF155B	NAT	438- 57
MZ5970	MSC	228- 93	MZC150A10	♦MOTA	239- 50	NL555T	♦NAT	483- 6	NLC501PM	♦NAT	494- 22	NLF155C	NAT	446- 60

Δ-Registered with JEDEC by this manufacturer

♦-Copy of mfr's data sheet may be ordered from D.A.T.A.

1. TYPE No. CROSS INDEX

IN TYPE NUMBER SEQUENCE

TYPE No.	MFRS	Pg&Line
NLF155D	NAT	454- 80
NLF155E	NAT	461- 8
NLF156A	NAT	428- 77
NLF156B	NAT	438- 58
NLF156C	NAT	446- 61
NLF156D	NAT	454- 81
NLF156E	NAT	461- 9
NLF157A	NAT	428- 78
NLF157B	NAT	438- 59
NLF157C	NAT	446- 62
NLF157D	NAT	454- 82
NLF157E	NAT	461- 10
NLF158E	NAT	461- 11
NLF158M	NAT	468- 28
NLF158N	NAT	477- 33
NLF158P	NAT	483-104
NLF158S	NAT	472- 59
NLF158T	NAT	480- 98
NLF159E	NAT	461- 12
NLF159M	NAT	468- 29
NLF159N	NAT	477- 34
NLF159P	NAT	483-105
NLF159S	NAT	472- 60
NLF159T	NAT	480- 99
NLF180A	♦NAT	429- 17
NLF180B	NAT	439- 62
NLF180C	NAT	447- 22
NLF180D	NAT	455- 90
NLF180E	NAT	461- 84
NLF180M	NAT	469- 56
NLF180N	NAT	478- 42
NLF180P	NAT	484- 88
NLF180PA	NAT	487- 4
NLF180PB	NAT	489- 68
NLF180PC	NAT	491- 47
NLF180S	NAT	473- 2
NLF180T	NAT	481- 39
NLF185A	♦NAT	429- 18
NLF185B	♦NAT	439- 54
NLF185C	♦NAT	447- 14
NLF185D	♦NAT	455- 81
NLF185E	♦NAT	461- 76
NLF185M	♦NAT	469- 43
NLF290A	NAT	429- 70
NLF290B	NAT	440- 10
NLF290C	NAT	447- 81
NLF290D	NAT	456- 44
NLF290E	NAT	462- 35
NLF290M	NAT	470- 24
NLF290N	NAT	479- 4
NLF290P	NAT	485- 46
NLF291A	♦NAT	429- 75
NLF291B	♦NAT	440- 15
NLF291C	♦NAT	447- 86
NLF291D	♦NAT	456- 49
NLF291E	♦NAT	462- 42
NLF291M	♦NAT	470- 31
NLF291N	♦NAT	479- 9
NLF291P	♦NAT	485- 51
NLF291PA	NAT	487- 36
NLF291PB	NAT	490- 17
NLF291S	♦NAT	473- 44
NLF291T	♦NAT	481- 77
NLF295A	NAT	429- 71
NLF295B	NAT	440- 11
NLF295C	NAT	447- 82
NLF295D	NAT	456- 45
NLF295E	NAT	462- 36
NLF295M	NAT	470- 25
NLF297A	NAT	429- 72
NLF297B	NAT	440- 12
NLF297C	NAT	447- 83
NLF297D	NAT	456- 46
NLF297E	NAT	462- 37
NLF297M	NAT	470- 26
NLF380A	NAT	429- 55
NLF380B	NAT	439- 99
NLF380C	NAT	447- 60
NLF380D	NAT	456- 19
NLF380E	NAT	462- 10
NLF380M	NAT	469-100
NLF380N	NAT	478- 85
NLF380P	NAT	485- 17
NLF385A	NAT	429- 56
NLF385B	NAT	439-100
NLF385C	NAT	447- 61
NLF385D	NAT	456- 20
NLF385E	NAT	462- 11
NLF385M	NAT	469-101
NLH150B	♦NAT	438- 74
NLH150C	♦NAT	446- 69
NLH150D	♦NAT	454- 97
NLH150E	♦NAT	461- 19
NLH150M	♦NAT	468- 45
NLH150N	♦NAT	477- 45
NLH150P	♦NAT	484- 10
NLH150S	♦NAT	472- 63
NLH150T	♦NAT	480-102
NLH152B	♦NAT	438- 75
NLH152C	♦NAT	446- 70
NLH152D	♦NAT	454- 98
NLH152E	♦NAT	461- 20
NLH152M	♦NAT	468- 46
NLH152N	♦NAT	477- 46
NLH152P	♦NAT	484- 11
NLH152S	♦NAT	472- 64
NLH152T	♦NAT	480-103
NPC0010	♦NPC	292- 12
NPC45-2	♦NPC	544- 14
NPC0050	NPC	294- 5
NPC86	♦NPC	281- 15
NPC88	♦NPC	282- 16
NPC88A	♦NPC	282- 17
NPC89	♦NPC	281- 71

TYPE No.	MFRS	Pg&Line
NPC0100	♦NPC	300- 84
NPC103-47	♦NPC	553- 19
NPC104-1	♦NPC	545- 28
NPC185	♦NPC	271- 71
NPC0200	♦NPC	311- 68
NPC0400	♦NPC	330- 50
NPC0600	♦NPC	347- 81
NPC704	♦NPC	540- 70
NPC0800	♦NPC	360- 66
NPC1000	♦NPC	370-107
NPC1500	♦NPC	384- 86
NPQ199	♦NPC	545- 29
NPQ300	♦NPC	538- 76
NPQ6261	♦NPC	544- 15
NPQ8317	♦NPC	539- 63
NS1000	SOD	293-102
NS1001	SOD	300- 68
NS1002	SOD	311- 53
NS1003	SOD	321- 74
NS1004	SOD	330- 34
NS1005	SOD	340- 44
NS1006	SOD	347- 63
NS1007	SOD	355- 67
NS1008	SOD	360- 43
NS2000	SOD	295- 8
NS2001	SOD	302- 29
NS2002	SOD	313- 30
NS2003	SOD	322- 92
NS2004	SOD	332- 17
NS2005	SOD	341- 53
NS2006	SOD	349- 38
NS2007	SOD	356- 26
NS2008	SOD	361-103
NS3000	SOD	295- 54
NS3001	SOD	302- 86
NS3002	SOD	313- 95
NS3003	SOD	323- 25
NS3004	SOD	332- 88
NS3005	SOD	341-100
NS3006	SOD	349-103
NS3007	SOD	356- 55
NS3008	SOD	362- 57
NS6000	SOD	296- 1
NS6001	SOD	303- 64
NS6002	SOD	314- 78
NS6003	SOD	323- 96
NS6004	SOD	333- 70
NS6005	SOD	342- 43
NS6006	SOD	350- 85
NS6007	SOD	356- 80
NS6008	SOD	363- 21
NTO 6C0	♦EBRG	165- 30
NTO 6C12	♦EBRG	192-110
NTO 6C13	♦EBRG	194-171
NTO 6C15	♦EBRG	197-128
NTO 6C16	♦EBRG	199-122
NTO 6C18	♦EBRG	202- 35
NTO 6C20	♦EBRG	204-175
NTO 6C22	♦EBRG	206-148
NTO 6C24	♦EBRG	208-140
NTO 6C27	♦EBRG	211- 31
NTO 6C30	♦EBRG	213- 41
NTO 6C33	♦EBRG	215- 5
NTO 6C36	♦EBRG	216-122
NTO 6C39	♦EBRG	218- 19
NTO 6C43	♦EBRG	219-100
NTO 6C47	♦EBRG	221- 34
NTO 6C51	♦EBRG	222-172
NTO 6C56	♦EBRG	224- 65
NT3C10	♦EBRG	189- 6
NT3C11	♦EBRG	190-188
NT3C12	♦EBRG	193- 95
NT3C13	♦EBRG	195-121
NT3C15	♦EBRG	198- 96
NT3C16	♦EBRG	200- 68
NT3C18	♦EBRG	202-188
NT3C20	♦EBRG	205-126
NT3C22	♦EBRG	207-111
NT3C24	♦EBRG	209- 88
NT3C27	♦EBRG	211-178
NT3C30	♦EBRG	213-173
NT3C33	♦EBRG	215-143
NT3C36	♦EBRG	217- 38
NT3C39	♦EBRG	218-117
NT3C43	♦EBRG	220- 10
NT3C47	♦EBRG	221-139
NT3C51	♦EBRG	223- 81
NT3C56	♦EBRG	224-168
NT3C62	♦EBRG	226-112
NT3C68	♦EBRG	227-174
NT3C75	♦EBRG	229- 86
NT3C82	♦EBRG	230-164
NT3C91	♦EBRG	232- 97
NT3C100	♦EBRG	233-147
NT161	SOIF	261- 9
NT162	SOIF	261- 12
NT163	SOIF	261- 27
NT164	SOIF	261- 29
NT165	SOIF	261- 32
NT251	SOIF	261- 10
NT252	SOIF	261- 13
NT253	SOIF	261- 28
NT254	SOIF	261- 30
NT255	SOIF	261- 33
NTD04	EDI	397- 5
NTD05	EDI	399- 66
NTD06	EDI	401- 23
NTD08	EDI	403- 84
NTD10	EDI	405-103
NTD12	EDI	407- 31
NTD14	EDI	407- 99
NTD16	EDI	409- 6
NTD18	EDI	409- 58
NTD20	EDI	410- 21

TYPE No.	MFRS	Pg&Line
NTD22	EDI	410- 71
NTD24	EDI	410- 99
NTD26	EDI	411- 62
NTD28	EDI	411- 88
NTD30	EDI	412- 31
OA5	MULB	253- 88
PHIC	PHIN	
	VALG	
OA6	MULB	251- 7
OA7	MULB	246- 76
PHIC	PHIN	
	VALG	
OA9	PHIC	247- 72
PHIN	VALG	
OA10	MULB	268- 16
	PHIC	
OA31	PHIC	298- 88
PHIN	♦VALG	
OA47	♦MULB	266-105
♦PHIC	PHIN	
RADF	♦VALG	
OA70	BELI	592- 49
MATJ	MULB	
♦PHIC	PHIN	
	VALG	
OA71	MULB	250- 96
	PHIC	
OA72	BELI	249- 57
MATJ	♦PHIC	
	VALG	
OA73	BELI	247- 10
MULB	♦PHIC	
	VALG	
OA79	BELI	249- 9
MATJ	♦MULB	
♦PHIC	PHIN	
RADF	VALG	
OA81	BELI	254- 66
MATJ	MULB	
♦PHIC	PHIN	
♦RADF	♦VALG	
OA85	BELI	254- 66
MATJ	MULB	
♦PHIC	PHIN	
♦RADF	♦VALG	
OA86	BELI	276- 80
	VALG	
OA90	APX	247- 16
MATJ	MINA	
♦MULB	♦PHIC	
PHIN	RADF	
	♦VALG	
OA91	APX	254- 67
BELI	MATJ	
MINA	♦MULB	
♦PHIC	PHIN	
RADF	♦VALG	
OA92	APX	265- 23
♦PHIC	PHIN	
	RADF	
OA95	APX	254- 68
BELI	MATJ	
MINA	♦MULB	
♦PHIC	PHIN	
RADF	♦VALG	
OA129	TIID	252- 47
	TIIF	
OA130	TIID	255- 26
	TIIF	
OA132	TIID	258-108
	TIIF	
OA200	MINA	250- 11
♦MULB	PHIC	
PHIN	RADF	
TIID	TIIF	
	♦VALG	
OA202	MINA	255- 83
♦MULB	PHIC	
PHIN	RADF	
TIID	TIIF	
	♦VALG	
OA210	♦MULB	332- 70
OA211	♦MULB	362- 39
OAP12	♦MULB	576- 35
PHIC	RADF	
OAZ200	♦MULB	170- 69
♦PHIC	PHIN	
	VALG	
OAZ201	♦MULB	171-115
♦PHIC	PHIN	
	VALG	
OAZ202	♦MULB	172-135
♦PHIC	PHIN	
	VALG	
OAZ203	♦MULB	174-132
♦PHIC	PHIN	
	VALG	
OAZ204	♦MULB	177- 15
♦PHIC	PHIN	
	VALG	
OAZ205	♦MULB	179- 67
♦PHIC	PHIN	
	VALG	
OAZ206	♦MULB	181-121
♦PHIC	PHIN	
	VALG	
OAZ207	♦MULB	185- 47
♦PHIC	PHIN	
	VALG	
OAZ208	♦MULB	169- 77
PHIC	PHIN	
	VALG	
OAZ209	♦MULB	171-116
cont.next col.		

TYPE No.	MFRS	Pg&Line
OAZ209		
(cont)	PHIC	
PHIN	VALG	
OAZ210	♦MULB	174-133
PHIC	PHIN	
	VALG	
OAZ211	♦MULB	179- 68
PHIC	PHIN	
	VALG	
OAZ212	♦MULB	185- 48
PHIC	PHIN	
	VALG	
OAZ213	♦MULB	191-200
PHIC	PHIN	
	VALG	
OAZ222	♦MULB	173-141
OAZ223	♦MULB	175-119
OAZ224	♦MULB	178-135
OAZ225	♦MULB	180-178
OAZ226	♦MULB	183- 47
OAZ227	♦MULB	186-158
OAZ228	♦MULB	189- 69
OAZ229	♦MULB	191- 43
OAZ230	♦MULB	193-161
OAZ231	♦MULB	195-178
OAZ232	♦MULB	198-163
OAZ233	♦MULB	200-119
OAZ234	♦MULB	203- 56
OAZ235	♦MULB	205-187
OAZ236	♦MULB	207-178
OAZ237	♦MULB	209-147
OAZ240	♦MULB	170- 67
OAZ241	♦MULB	171-112
OAZ242	♦MULB	172-132
OAZ243	♦MULB	174-128
OAZ244	♦MULB	177- 12
OAZ245	♦MULB	179- 63
OAZ246	♦MULB	181-118
OAZ247	♦MULB	185- 43
OAZ268	MULB	169- 59
OAZ269	MULB	171- 94
OAZ270	MULB	174- 79
OAZ271	MULB	179- 38
OAZ272	MULB	184-218
OAZ273	MULB	191-167
OAZ290	MULB	175-120
OAZ291	MULB	180-179
OAZ292	MULB	186-159
ORP10	PHIC	577- 95
	♦RADF	
ORP11	MULB	577- 96
ORP13	MULB	577- 97
PHIC	♦RADF	
ORP30	PHIC	577- 98
ORP50	PHIC	577- 99
ORP52	PHIC	577-100
ORP60	MULB	577-101
	PHIC	
ORP61	MULB	577-102
	PHIC	
ORP62	PHIC	577-103
ORP63	PHIC	577-104
ORP90	PHIC	577-105
ORP93	MULB	577-106
	PHIC	
ORP94	PHIC	577-107
OS13	TOSJ	576- 36
OY1011	AEGG	378- 4
OY1021	AEGG	347- 43
P1/1H	ITTE	251- 52
P1/2H	ITTE	255- 30
P1/3H	ITTE	257- 68
P1/4H	ITTE	258- 42
P1/5H	ITTE	259- 13
P1A5	EDL	292- 36
P1B5	EDL	292- 78
P1C5	EDL	298- 46
P1D5	EDL	298- 96
P1E5	EDL	307- 46
P1F5	EDL	309- 56
P1G5	EDL	320- 22
P1H5	EDL	328- 13
P1K5	EDL	338- 96
P1M5	EDL	345- 74
P1RF100	GELC	405- 53
P1RP15	GELC	383-108
P1RP24	GELC	391- 65
P1RP36	GELC	395- 95
P1RP48	GELC	398- 58
P1RP60	GELC	400- 97
P1RP72	GELC	402- 75
P1RP80	GELC	403- 55
P1RP100	GELC	405- 63
P2A5	EDL	292- 37
P2B5	EDL	292- 82
P2C5	EDL	298- 48
P2D5	EDL	298-100
P2E5	EDL	307- 50
P2F5	EDL	309- 62
P2G5	EDL	320- 29
P2H5	EDL	328- 19
P2K5	EDL	338-101
P2M5	EDL	345- 82
P3/1H	ITTE	251- 59
P3/2H	ITTE	255- 36
P3/3H	ITTE	257- 74
P3/4H	ITTE	258- 48
P3/5H	ITTE	259- 18
P3A5	EDL	292- 38
P3B5	EDL	292-105
P3C5	EDL	298- 49
P3D5	EDL	299- 16
P3E5	EDL	307- 55
P3F5	EDL	309- 86

TYPE No.	MFRS	Pg&Line
P3G5	EDL	320- 47
P3H5	EDL	328- 40
P3K5	EDL	339- 9
P3M5	EDL	345-105
P4A5	EDL	292- 39
P4B5	EDL	293- 5
P4C5	EDL	298- 50
P4D5	EDL	299- 31
P4E5	EDL	307- 61
P4F5	EDL	309-102
P4G5	EDL	320- 58
P4H5	EDL	328- 55
P4HZ	SOIF	334- 23
P4K5	EDL	339- 21
P4M5	EDL	346- 6
P5A5	EDL	292- 41
P5B5	EDL	293- 13
P5C5	EDL	298- 51
P5D5	EDL	299- 41
P5E5	EDL	307- 66
P5F5	EDL	310- 1
P5G5	EDL	320- 68
P5H5	EDL	328- 69
P5K5	EDL	339- 31
P5M5	EDL	346- 20
P6/1H	ITTE	251- 68
P6/2H	ITTE	255- 42
P6/3H	ITTE	257- 80
P6/4H	ITTE	258- 54
P6/5H	ITTE	259- 23
P6A5	EDL	292- 42
P6B5	EDL	293- 32
P6C5	EDL	298- 52
P6D5	EDL	299- 69
P6E5	EDL	307- 71
P6F5	EDL	310- 32
P6G5	EDL	320- 86
P6H5	EDL	328- 99
P6HZ	SOIF	351- 35
P6K5	EDL	339- 51
P6M5	EDL	346- 44
P6RP8	GELC	359- 89
P6RP10	GELC	370- 30
P6RP12	GELC	377- 95
P7A5	EDL	292- 43
P7B5	EDL	293- 51
P7C5	EDL	298- 53
P7D5	EDL	299-102
P7E5	EDL	307- 73
P7F5	EDL	310- 71
P7G5	EDL	321- 2
P7H5	EDL	329- 39
P7K5	EDL	339- 84
P7M5	EDL	346- 77
P8/1H	ITTE	251- 75
P8/2H	ITTE	255- 48
P8/3H	ITTE	257- 86
P8/4H	ITTE	258- 60
P8/5H	ITTE	259- 28
P8HZ	SOIF	363- 79
P32H	SOIF	395- 18
P40H	SOIF	397- 55
P48H	SOIF	398- 73
P56H	SOIF	400- 62
P64H	SOIF	401- 78
P70H	SOIF	402- 68
P80H	SOIF	404- 14
P100	GICI	301- 38
P100A△	GIC	294- 97
P100A#	GICI	300- 37
P100B	♦GIC	301-106
P100D	♦GIC	312-107
P100G	♦GIC	331- 93
P100H	SOIF	406- 58
P100J	♦GIC	349- 7
P150A	GIC	294- 98
P150B	GIC	301-107
P150D	GIC	312-108
P150G	GIC	331- 94
P150J	GIC	349- 8
P200A	GICI	311- 13
P200H	SOIF	410- 47
P400A	GICI	329- 99
P400H	SOIF	412- 95
P504	SOIF	295- 89
P506	SOIF	296- 6
P510	SOIF	296- 40
P600A	GICI	347- 20
P800A	GICI	360- 16
P1000A	GICI	370- 60
P1004	SOIF	303- 34
P1006	SOIF	303- 69
P1010	SOIF	304- 2
P1104	SOIF	373- 2
P1106	SOIF	373- 22
P1110	SOIF	373- 63
P1204	SOIF	379- 9
P1206	SOIF	379- 25
P1210	SOIF	379- 40
P1506	SOIF	261- 8
		385- 3
P2004	SOIF	314- 43
P2006	SOIF	314- 85
P2010	SOIF	315- 24
P3006	SOIF	323-100
P3010	SOIF	324- 28
P4004	SOIF	333- 36
P4006	SOIF	333- 77
P4010	SOIF	334- 24
P5006	SOIF	342- 47
P5010	SOIF	342- 81
P006001D,E-H	AEL	520- 78
P006004D,E-H	AEL	526- 29
P6004	SOIF	350- 55

△-Registered with JEDEC by this manufacturer

♦-Copy of mfr's data sheet may be ordered from D.A.T.A.

1. TYPE No. CROSS INDEX

IN TYPE NUMBER SEQUENCE

TYPE No.	MFRS	Pg&Line
P6006	SOIF	350 - 90
P006010D,E,F,G		529 - 51
	AEL	
P6010	SOIF	351 - 36
P8004	SOIF	362 -109
P8006	SOIF	363 - 26
P8010	SOIF	363 - 80
P015001D,E-H	PII	520 - 79
P015004D,E-H	PII	526 - 30
P015010D,E,F,G		529 - 52
	AEL	
P015020C,D,E	AEL	532 - 47
P024004D,E-H	PII	526 - 31
P024010C,D,E,F		529 - 53
	PII	
P024020C,D,E	AEL	532 - 48
P030004C,D,E,F		563 - 51
	PII	
P030010C,D,E,F		529 - 54
	AEL	
P030020B,C,D,E		532 - 49
	PII	
P045004C,D,E,F		526 - 32
	PII	
P045010B,C-F	AEL	529 - 55
P045020B,C,D	AEL	532 - 50
P060003-1R	AEL	533 - 8
P060003-2R	AEL	533 - 9
P060003-3R	AEL	533 - 10
P060005-1R	AEL	534 - 82
P060005-2R	AEL	534 - 83
P060005-3R	AEL	534 - 84
P060007-1R	AEL	536 - 80
P060007-2R	AEL	536 - 81
P060010A,B-E	AEL	529 - 56
P060020A,B,C,D		532 - 51
	PII	
P090010A,B,C,D		529 - 57
	PII	
P090020A,B,C	AEL	532 - 52
PA05	♦ EDI	296 - 29
PA10	♦ EDI	303 - 99
PA20	♦ EDI	315 - 9
PA40	♦ EDI	334 - 8
PA60	♦ EDI	351 - 23
PA80	♦ EDI	363 - 69
PA0100H,J-L,N	PII	519 - 42
PA0100P,Q,S-V		519 - 43
	♦ PII	
PA0100W	♦ PII	519 - 44
PA100	♦ EDI	373 - 56
PA0101H,J-L,N		520 - 21
	♦ PII	
PA0101P,Q,S-U		520 - 22
	♦ PII	
PA0102H,J,K,L		523 - 8
	♦ PII	
PA0102N,P,Q,S		523 - 9
	♦ PII	
PA0103H,J,K,L		523 - 71
	♦ PII	
PA0103N,P	♦ PII	523 - 73
PA0104H,J,K,L		525 - 96
	♦ PII	
PA0105H,J,K	♦ PII	527 - 50
PA0106H,J	♦ PII	528 - 25
PA0200A	♦ PII	533 - 99
PA0200B	♦ PII	532 - 10
PA0200C	♦ PII	531 - 23
PA0200D	♦ PII	528 - 21
PA0200E,F-H,J		528 - 31
	♦ PII	
PA200	GICI	311 -102
PA400	GICI	330 - 84
PA600	GICI	348 - 3
PA0700H,J-L,N	PII	519 - 45
PA0700P,Q,S-U	PII	519 - 46
PA0700V,W	PII	519 - 47
PA0701H,J-L,N	PII	520 - 23
PA0701P,Q,S-U	PII	520 - 24
PA0702H,J,K,L	PII	523 - 10
PA0702N,P,Q,S	PII	523 - 11
PA0703H,J,K,L	PII	523 - 72
PA0703N,P	PII	523 - 74
PA0704H,J,K,L	PII	525 - 97
PA0705H,J,K	PII	527 - 51
PA0706H,J	PII	528 - 26
PB05	♦ EDI	297 - 10
PB10	♦ EDI	305 - 4
PB20	♦ EDI	316 - 41
PB40	♦ EDI	335 - 45
PB60	♦ EDI	352 - 39
PB80	♦ EDI	364 - 62
PB100	♦ EDI	374 - 32
PBC05	EDI	297 - 35
PBC10	EDI	305 - 31
PBC20	EDI	316 - 72
PBC40	EDI	335 - 75
PBC60	EDI	352 - 64
PBC80	EDI	364 - 74
PBC100	EDI	374 - 42
PBR05	EDI	272 - 53
PBR10	EDI	279 - 5
PBR20	EDI	282 - 73
PBR40	EDI	285 - 45
PBR60	EDI	286 -110
PBT05	♦ EDI	297 - 30
PBT10	♦ EDI	305 - 25
PBT20	♦ EDI	316 - 67
PBT40	♦ EDI	335 - 70
PBT60	♦ EDI	352 - 60
PBT80	♦ EDI	364 - 71
PBT100	♦ EDI	374 - 40
PBU05	♦ EDI	297 - 11

TYPE No.	MFRS	Pg&Line
PBU10	♦ EDI	305 - 5
PBU20	♦ EDI	316 - 42
PBU40	♦ EDI	335 - 46
PBU60	♦ EDI	352 - 40
PBU80	♦ EDI	364 - 63
PBU100	♦ EDI	374 - 33
PC107,A,B	CRY	536 - 82
	KSC	TRW
PC112,A,B	CRY	540 - 71
	KSC	TRW
PC113,A,B	CRY	549 - 95
	KSC	TRW
PC114,A,B	CRY	557 - 24
	KSC	TRW
PC115,A,B	CRY	540 - 72
	KSC	TRW
PC116,A,B	CRY	549 - 96
	KSC	TRW
PC117,A,B	CRY	557 - 25
	KSC	TRW
PC122,A,B	CRY	557 - 26
	KSC	TRW
PC123,A,B	CRY	545 - 30
	KSC	TRW
PC124,A,B	CRY	545 - 31
	KSC	TRW
PC125,A,B	CRY	545 - 32
	KSC	TRW
PC126,A,B	CRY	545 - 33
	KSC	TRW
PC127,A,B	CRY	553 - 85
	KSC	TRW
PC128,A,B	CRY	553 - 86
	KSC	TRW
PC129,A,B	CRY	553 - 87
	KSC	TRW
PC130,A,B	CRY	553 - 88
	KSC	TRW
PC132,A,B	CRY	540 - 73
	KSC	TRW
PC133,A,B	CRY	549 - 97
	KSC	TRW
PC134,A,B	CRY	557 - 27
	KSC	TRW
PC135,A,B	CRY	540 - 74
	KSC	TRW
PC136,A,B	CRY	549 - 98
	KSC	TRW
PC137,A,B	CRY	557 - 28
	KSC	TRW
PC138,A,B	CRY	536 - 83
	KSC	TRW
PC139,A,B	CRY	536 - 84
	KSC	TRW
PC140,A,B	CRY	536 - 85
	KSC	TRW
PC141,A,B	CRY	536 - 86
	KSC	TRW
PC201	CRY	535 - 35
PC202	CRY	536 - 87
PC203	CRY	536 - 88
PC204	CRY	536 - 89
PC205	CRY	536 - 90
PC207	CRY	536 - 91
PC208	CRY	536 - 92
PC209	CRY	536 - 93
PC210	CRY	536 - 94
PC211	CRY	536 - 95
PC212	CRY	536 - 96
PC213	CRY	536 - 97
PC214	CRY	536 - 98
PC215	CRY	536 - 99
PC216	CRY	536 -100
PC217	CRY	536 -101
PC218	CRY	536 -102
PC219	CRY	536 -103
PC220	CRY	536 -104
PC221	CRY	536 -105
PC222	CRY	536 -106
PC223	CRY	536 -107
PC224	CRY	536 -108
PC225	CRY	536 -109
PC226	CRY	536 -110
PC227	CRY	537 - 1
PC228	CRY	537 - 2
PC229	CRY	537 - 3
PC230	CRY	537 - 4
PC231	CRY	537 - 5
PC232	CRY	537 - 6
PC233	CRY	537 - 7
PC234	CRY	537 - 8
PC235	CRY	537 - 9
PC301	CRY	540 - 75
PC302	CRY	540 - 76
PC303	CRY	540 - 77
PC304	CRY	540 - 78
PC305	CRY	540 - 79
PC307	CRY	540 - 80
PC308	CRY	540 - 81
PC309	CRY	540 - 82
PC310	CRY	540 - 83
PC311	CRY	540 - 84
PC312	CRY	540 - 85
PC313	CRY	540 - 86
PC314	CRY	540 - 87
PC315	CRY	540 - 88
PC316	CRY	540 - 89
PC317	CRY	540 - 90
PC318	CRY	540 - 91
PC319	CRY	540 - 92
PC320	CRY	540 - 93
PC321	CRY	540 - 94
PC322	CRY	540 - 95
PC323	CRY	540 - 96

TYPE No.	MFRS	Pg&Line
PC324	CRY	540 - 97
PC325	CRY	540 - 98
PC326	CRY	540 - 99
PC327	CRY	540 -100
PC328	CRY	540 -101
PC329	CRY	540 -102
PC330	CRY	540 -103
PC331	CRY	540 -104
PC332	CRY	540 -105
PC333	CRY	540 -106
PC334	CRY	540 -107
PC335	CRY	540 -108
PC401	CRY	545 - 34
PC402	CRY	545 - 35
PC403	CRY	545 - 36
PC404	CRY	545 - 37
PC405	CRY	545 - 38
PC407	CRY	545 - 39
PC408	CRY	545 - 40
PC409	CRY	545 - 41
PC410	CRY	545 - 42
PC411	CRY	545 - 43
PC412	CRY	545 - 44
PC413	CRY	545 - 45
PC414	CRY	545 - 46
PC415	CRY	545 - 47
PC416	CRY	545 - 48
PC417	CRY	545 - 49
PC418	CRY	545 - 50
PC419	CRY	545 - 51
PC420	CRY	545 - 52
PC421	CRY	545 - 53
PC422	CRY	545 - 54
PC423	CRY	545 - 55
PC424	CRY	545 - 56
PC425	CRY	545 - 57
PC426	CRY	545 - 58
PC427	CRY	545 - 59
PC428	CRY	545 - 60
PC429	CRY	545 - 61
PC430	CRY	545 - 62
PC431	CRY	545 - 63
PC432	CRY	545 - 64
PC433	CRY	545 - 65
PC434	CRY	545 - 66
PC435	CRY	545 - 67
PC500	SRPJ	601 - 5
PC502	CRY	549 - 99
PC503	CRY	549 -100
PC504	CRY	549 -101
PC505	CRY	549 -102
PC507	CRY	549 -103
PC508	CRY	549 -104
PC509	CRY	549 -105
PC510	CRY	549 -106
PC511	CRY	549 -107
PC512	CRY	549 -108
PC513	CRY	549 -109
PC514	CRY	549 -110
PC515	CRY	550 - 1
PC516	CRY	550 - 2
PC517	CRY	550 - 3
PC518	CRY	550 - 4
PC519	CRY	550 - 5
PC520	CRY	550 - 6
PC521	CRY	550 - 7
PC522	CRY	550 - 8
PC523	CRY	550 - 9
PC524	CRY	550 - 10
PC525	CRY	550 - 11
PC526	CRY	550 - 12
PC527	CRY	550 - 13
PC528	CRY	550 - 14
PC529	CRY	550 - 15
PC530	CRY	550 - 16
PC531	CRY	550 - 17
PC532	CRY	550 - 18
PC533	CRY	550 - 19
PC534	CRY	550 - 20
PC535	CRY	550 - 21
PC0600A	♦ PII	537 - 80
PC0600B	♦ PII	537 - 81
PC0600C	♦ PII	537 - 82
PC0600D	♦ PII	537 - 83
PC0601A	♦ PII	540 -109
PC0601B	♦ PII	540 -110
PC0601C	♦ PII	541 - 1
PC0601D	♦ PII	541 - 2
PC0602A	♦ PII	545 - 68
PC0602B	♦ PII	545 - 69
PC0602C	♦ PII	545 - 70
PC0602D	♦ PII	545 - 71
PC0603A	♦ PII	550 - 22
PC0603B	♦ PII	550 - 23
PC0603C	♦ PII	550 - 24
PC603	CRY	553 - 89
PC0604A	♦ PII	553 - 90
PC0604B	♦ PII	553 - 91
PC0604C	♦ PII	553 - 92
PC604	CRY	553 - 93
PC0605A	♦ PII	557 - 29
PC0605B	♦ PII	557 - 30
PC0605C	♦ PII	557 - 31
PC605	CRY	553 - 94
PC608	CRY	553 - 95
PC609	CRY	553 - 96
PC0610A	♦ PII	537 - 84
PC0610B	♦ PII	537 - 85
PC0610C	♦ PII	537 - 86
PC610	CRY	553 - 97
PC0611A	♦ PII	541 - 3
PC0611B	♦ PII	541 - 4
PC0611C	♦ PII	541 - 5
PC611	CRY	553 - 98

TYPE No.	MFRS	Pg&Line
PC0612A	♦ PII	545 - 72
PC0612B	♦ PII	545 - 73
PC0612C	♦ PII	545 - 74
PC0613A	♦ PII	550 - 25
PC0613B	♦ PII	550 - 26
PC0613C	♦ PII	550 - 27
PC613	CRY	553 - 99
PC0614A	♦ PII	553 -100
PC0614B	♦ PII	553 -101
PC0614C	♦ PII	553 -102
PC614	CRY	553 -103
PC0615A	♦ PII	557 - 32
PC0615B	♦ PII	557 - 33
PC0615C	♦ PII	557 - 34
PC615	CRY	553 -104
PC616	CRY	553 -105
	TRW	
PC617	CRY	553 -106
PC618	CRY	553 -107
PC619	CRY	553 -108
PC0620A	♦ PII	537 - 87
PC0620B	♦ PII	537 - 88
PC0620C	♦ PII	537 - 89
PC620	CRY	553 -109
PC0621A	♦ PII	541 - 6
PC0621B	♦ PII	541 - 7
PC621	CRY	553 -110
PC0622A	♦ PII	545 - 75
PC0622B	♦ PII	545 - 76
PC622	CRY	554 - 1
PC0623A	♦ PII	550 - 28
PC0623B	♦ PII	550 - 29
PC623	CRY	554 - 2
PC0624A	♦ PII	554 - 3
PC0624B	♦ PII	554 - 4
PC624	CRY	554 - 5
PC0625A	♦ PII	557 - 35
PC0625B	♦ PII	557 - 36
PC625	CRY	554 - 6
PC626	CRY	554 - 7
PC627	CRY	554 - 8
PC628	CRY	554 - 9
PC629	CRY	554 - 10
PC0630A	♦ PII	537 - 90
PC0630B	♦ PII	537 - 91
PC630	CRY	554 - 11
PC0631A	♦ PII	541 - 8
PC631	CRY	554 - 12
PC0632A	♦ PII	545 - 77
PC0632B	♦ PII	545 - 78
PC632	CRY	554 - 13
PC0633A	♦ PII	550 - 30
PC633	CRY	554 - 14
PC0634A	♦ PII	554 - 15
PC634	CRY	554 - 16
PC0635A	♦ PII	557 - 37
PC635	CRY	554 - 17
PC0640A	♦ PII	537 - 92
PC0641A	♦ PII	541 - 9
PC0642A	♦ PII	545 - 79
PC0643A	♦ PII	550 - 31
PC0644A	♦ PII	554 - 18
PC0645A	♦ PII	557 - 38
PC704	CRY	557 - 39
PC705	CRY	557 - 40
PC709	CRY	557 - 41
PC710	CRY	557 - 42
PC711	CRY	557 - 43
PC714	CRY	557 - 44
PC715	CRY	557 - 45
PC716	CRY	557 - 46
PC717	CRY	557 - 47
PC719	CRY	557 - 48
PC720	CRY	557 - 49
PC721	CRY	557 - 50
PC722	CRY	557 - 51
PC723	CRY	557 - 52
PC724	CRY	557 - 53
PC725	CRY	557 - 54
PC726	CRY	557 - 55
PC727	CRY	557 - 56
PC728	CRY	557 - 57
PC729	CRY	557 - 58
PC730	CRY	557 - 59
PC731	CRY	557 - 60
PC732	CRY	557 - 61
PC733	CRY	557 - 62
PC734	CRY	557 - 63
PC735	CRY	557 - 64
PC1400A	♦ PII	537 - 93
PC1400B	♦ PII	537 - 94
PC1400C	♦ PII	537 - 95
PC1400D	♦ PII	537 - 96
PC1401A	♦ PII	541 - 10
PC1401B	♦ PII	541 - 11
PC1401C	♦ PII	541 - 12
PC1401D	♦ PII	541 - 13
PC1402A	♦ PII	545 - 80
PC1402B	♦ PII	545 - 81
PC1402C	♦ PII	545 - 82
PC1402D	♦ PII	545 - 83
PC1403A	♦ PII	550 - 32
PC1403B	♦ PII	550 - 33
PC1403C	♦ PII	550 - 34
PC1404A	♦ PII	554 - 19
PC1404B	♦ PII	554 - 20
PC1404C	♦ PII	554 - 21
PC1405A	♦ PII	534 - 45
PC1405B	♦ PII	534 - 46
PC1405C	♦ PII	534 - 47
PC1410A	♦ PII	537 - 97
PC1410B	♦ PII	537 - 98
PC1410C	♦ PII	537 - 99
PC1411A	♦ PII	541 - 14

TYPE No.	MFRS	Pg&Line
PC1411B	♦ PII	541 - 15
PC1411C	♦ PII	541 - 16
PC1412A	♦ PII	545 - 84
PC1412B	♦ PII	545 - 85
PC1412C	♦ PII	545 - 86
PC1413A	♦ PII	550 - 35
PC1413B	♦ PII	550 - 36
PC1413C	♦ PII	550 - 37
PC1414A	♦ PII	554 - 22
PC1414B	♦ PII	554 - 23
PC1414C	♦ PII	554 - 24
PC1415A	♦ PII	534 - 48
PC1415B	♦ PII	534 - 49
PC1415C	♦ PII	534 - 50
PC1420A	♦ PII	537 -100
PC1420B	♦ PII	537 -101
PC1420C	♦ PII	537 -102
PC1421A	♦ PII	541 - 17
PC1421B	♦ PII	541 - 18
PC1422A	♦ PII	545 - 87
PC1422B	♦ PII	545 - 88
PC1423A	♦ PII	550 - 38
PC1423B	♦ PII	550 - 39
PC1424A	♦ PII	554 - 25
PC1424B	♦ PII	554 - 26
PC1425A	♦ PII	534 - 51
PC1425B	♦ PII	534 - 52
PC1430A	PII	537 -103
PC1430B	PII	537 -104
PC1431A	♦ PII	541 - 19
PC1432A	♦ PII	545 - 89
PC1433A	♦ PII	550 - 40
PC1434A	♦ PII	554 - 27
PC1435A	♦ PII	534 - 53
PC1440A	♦ PII	537 -105
PC1441A	♦ PII	541 - 20
PC1442A	♦ PII	545 - 90
PC1443A	♦ PII	550 - 41
PC1444A	♦ PII	554 - 28
PC1445A	♦ PII	534 - 54
PC2600A	♦ PII	537 -106
PC2600B	♦ PII	537 -107
PC2600C	♦ PII	537 -108
PC2600D	♦ PII	537 -109
PC2601A	♦ PII	541 - 21
PC2601B	♦ PII	541 - 22
PC2601C	♦ PII	541 - 23
PC2601D	♦ PII	541 - 24
PC2602A	♦ PII	545 - 91
PC2602B	♦ PII	545 - 92
PC2602C	♦ PII	545 - 93
PC2602D	♦ PII	545 - 94
PC2603A	♦ PII	550 - 42
PC2603B	♦ PII	550 - 43
PC2603C	♦ PII	550 - 44
PC2604A	♦ PII	554 - 29
PC2604B	♦ PII	554 - 30
PC2604C	♦ PII	554 - 31
PC2605A	♦ PII	557 - 65
PC2605B	♦ PII	557 - 66
PC2605C	♦ PII	557 - 67
PC2610A	♦ PII	537 -110
PC2610B	♦ PII	538 - 1
PC2610C	♦ PII	538 - 2
PC2610D	♦ PII	538 - 3
PC2611A	♦ PII	541 - 25
PC2611B	♦ PII	541 - 26
PC2611C	♦ PII	541 - 27
PC2611D	♦ PII	541 - 28
PC2612A	♦ PII	545 - 95
PC2612B	♦ PII	545 - 96
PC2612C	♦ PII	545 - 97
PC2612D	♦ PII	545 - 98
PC2613A	♦ PII	550 - 45
PC2613B	♦ PII	550 - 46
PC2613C	♦ PII	550 - 47
PC2614A	♦ PII	554 - 32
PC2614B	♦ PII	554 - 33
PC2614C	♦ PII	554 - 34
PC2615A	♦ PII	557 - 68
PC2615B	♦ PII	557 - 69
PC2615C	♦ PII	557 - 70
PC2620A	♦ PII	538 - 4
PC2620B	♦ PII	538 - 5
PC2620C	♦ PII	538 - 6
PC2620D	♦ PII	538 - 7
PC2621A	♦ PII	541 - 29
PC2621B	♦ PII	541 - 30
PC2621C	♦ PII	541 - 31
PC2621D	♦ PII	541 - 32
PC2622A	♦ PII	545 - 99
PC2622B	♦ PII	545 -100
PC2622C	♦ PII	545 -101
PC2623A	♦ PII	550 - 48
PC2623B	♦ PII	550 - 49
PC2623C	♦ PII	550 - 50
PC2624A	♦ PII	554 - 35
PC2624B	♦ PII	554 - 36
PC2624C	♦ PII	554 - 37
PC2625A	♦ PII	557 - 71
PC2625B	♦ PII	557 - 72
PC2625C	♦ PII	557 - 73
PC2630A	♦ PII	538 - 8
PC2630B	♦ PII	538 - 9
PC2630C	♦ PII	538 - 10
PC2630D	♦ PII	538 - 11
PC2631A	♦ PII	541 - 33
PC2631B	♦ PII	541 - 34
PC2631C	♦ PII	541 - 35
PC2632A	♦ PII	545 -102
PC2632B	♦ PII	545 -103
PC2632C	♦ PII	545 -104
PC2633A	♦ PII	550 - 51
PC2633B	♦ PII	550 - 52

Δ-Registered with JEDEC by this manufacturer

♦-Copy of mfr's data sheet may be ordered from D.A.T.A.

1. TYPE No. CROSS INDEX

IN TYPE NUMBER SEQUENCE

TYPE No.	MFRS	Pg&Line
PC2633C	♦PII	550-53
PC2634A	♦PII	554-38
PC2634B	♦PII	554-39
PC2635A	♦PII	557-74
PC2635B	♦PII	557-75
PC2640A	♦PII	538-12
PC2640B	♦PII	538-13
PC2640C	♦PII	538-14
PC2641A	♦PII	541-36
PC2641B	♦PII	541-37
PC2641C	♦PII	541-38
PC2642A	♦PII	545-105
PC2642B	♦PII	545-106
PC2642C	♦PII	545-107
PC2643A	♦PII	550-54
PC2643B	♦PII	550-55
PC2644A	♦PII	554-40
PC2644B	♦PII	554-41
PC2645A	♦PII	557-76
PC2645B	♦PII	557-77
PCP1	♦CITF	301-2
PCP2	♦CITF	311-103
PCP4	♦CITF	330-85
PCP05	♦CITF	294-23
PCP6	♦CITF	348-4
PCP8	♦CITF	360-93
PCP10	♦CITF	371-18
PCV50A	♦CDLF	577-108
PCV56	CDLF	577-109
PCV58	♦CDLF	577-110
PCV60	CDLF	578-1
PCV67	CDLF	578-2
PCV68	CDLF	578-3
PCV69	CDLF	578-4
PCV70	CDLF	578-5
PCV71	CDLF	578-6
PCV76	♦CDLF	578-7
PCV85	CDLF	578-8
PCV88	CDLF	578-9
PCV97	CDLF	578-10
PCV104	CDLF	578-11
PD1	TRW	273-1
PD05	♦EDI	295-31
PD10	♦EDI	302-57
PD20	♦EDI	313-63
PD021	TRW	272-85
PD031	TRW	279-64
PD034	TRW	279-65
PD40	♦EDI	332-49
PD041	TRW	283-7
PD042	TRW	283-8
PD60	♦EDI	349-69
PD80	♦EDI	362-20
PD100	♦EDI	372-44
PD101	TRW	249-101
PD102	TRW	250-7
PD103	TRW	250-38
PD104	TRW	253-86
PD105	TRW	253-96
PD106	TRW	253-104
PD107	TRW	254-3
PD108	TRW	256-108
PD109	TRW	283-9
PD110	TRW	258-69
PD111	TRW	259-44
PD112	TRW	259-93
PD113	TRW	260-2
PD114	TRW	260-25
PD115	TRW	260-36
PD116	TRW	260-69
PD117	TRW	260-85
PD118	TRW	260-95
PD119	TRW	260-107
PD122	TRW	246-53
PD123	TRW	246-56
PD124	TRW	272-86
PD125	TRW	251-17
PD126	TRW	279-97
PD127	TRW	276-11
PD128	TRW	279-66
PD129	TRW	254-110
PD130	TRW	256-64
PD131	TRW	247-71
PD132	TRW	249-8
PD133	TRW	253-13
PD134	TRW	256-61
PD135	TRW	258-10
PD137	TRW	266-106
PD401	TRW	271-30
PD402	TRW	271-31
PD0801	♦PII	518-4
PD0801A	♦PII	518-5
PD0801AL	♦PII	518-6
PD0801L	♦PII	518-7
PD0802	♦PII	518-8
PD0802L	♦PII	518-9
PD0803	♦PII	518-10
PD0803L	♦PII	518-11
PD0804	♦PII	517-28
PD0804L	♦PII	517-29
PD0805	♦PII	517-30
PD0805L	♦PII	517-31
PD0806	♦PII	517-32
PD0806L	♦PII	517-33
PD0807	♦PII	518-12
PD0807L	♦PII	518-13
PD0808	♦PII	518-14
PD0808L	♦PII	518-15
PD0810	♦PII	592-50
PD0810A	♦PII	592-51
PD0810AL	♦PII	592-52
PD0810L	♦PII	592-53
PD910	TRW	259-47
PD911	TRW	259-94

TYPE No.	MFRS	Pg&Line
PD912	TRW	260-4
PD913	TRW	260-30
PD914	TRW	260-37
PD915	TRW	260-55
PD916	TRW	260-72
PD917	TRW	260-86
PD918	TRW	260-100
PD919	TRW	261-3
PD2704	TRW	278-63
PD2708	TRW	284-106
PD2710	TRW	280-36
PD2726A	♦TRW	271-109
PD2726B	♦TRW	278-59
PD2726C	♦TRW	281-13
PD2726D	♦TRW	282-13
PD2726E	♦TRW	283-96
PD2726F	♦TRW	284-15
PD2726G	♦TRW	284-75
PD6000,A	TRW	166-18
PD6001,A	TRW	166-89
PD6002,A	TRW	166-166
PD6003,A	TRW	167-123
PD6004,A	TRW	168-77
PD6005,A	TRW	169-73
PD6006,A	TRW	170-64
PD6007,A	TRW	171-109
PD6008,A	TRW	172-129
PD6009,A	TRW	174-119
PD6010,A	TRW	177-9
PD6011,A	TRW	179-59
PD6012,A	TRW	181-115
PD6013,A	TRW	185-40
PD6014,A	TRW	187-109
PD6015,A	TRW	189-150
PD6016,A	TRW	191-194
PD6017,A	TRW	194-79
PD6018,A	TRW	197-25
PD6019,A	TRW	199-31
PD6020,A	TRW	201-109
PD6041	TRW	166-19
PD6042	TRW	166-90
PD6043	TRW	166-167
PD6044	TRW	167-124
PD6045	TRW	168-78
PD6046	TRW	169-74
PD6047	TRW	170-65
PD6048	TRW	171-110
PD6049	TRW	172-130
PD6050	TRW	174-120
PD6051	TRW	177-10
PD6052	TRW	179-60
PD6053	TRW	181-116
PD6054	TRW	185-41
PD6055	TRW	187-110
PD6056	TRW	189-151
PD6057	TRW	191-195
PD6058	TRW	194-80
PD6059	TRW	197-26
PD6060	TRW	199-32
PD6061	TRW	201-110
PD6201	TRW	169-75
PD6202	TRW	170-66
PD6203	TRW	171-111
PD6204	TRW	172-131
PD6205	TRW	174-121
PD6206	TRW	177-11
PD6207	TRW	179-61
PD6208	TRW	181-117
PD6209	TRW	185-42
PD6210	TRW	187-111
PD9047	TRW	273-43
PD9049	TRW	276-42
PD9050	TRW	276-44
PD9050A	♦TRW	272-1
PD9050B	♦TRW	278-60
PD9050C	♦TRW	281-14
PD9050D	♦TRW	282-14
PD9050E	♦TRW	283-97
PD9757	TRW	281-60
PD9767	TRW	278-61
PE401	ITT	300-53
PE402	ITT	311-36
PE403	ITT	321-57
PE404	ITT	330-14
PE405	ITT	340-29
PE406	ITT	347-41
PE408	ITT	360-29
PE410	ITT	370-71
PE502	ITT	311-76
PE504	ITT	330-59
PE506	ITT	347-87
PE508	ITT	360-74
PE510	ITT	370-72
PF05	♦EDI	294-24
PF10	♦EDI	301-3
PF20	♦EDI	311-104
PF30	UNI	498-37
PF30A	UNI	498-38
PF40	♦EDI	330-86
PF60	♦EDI	348-5
	♦SES	499-44
PF60△	UNI	601-6
PF60A	♦UNI	601-7
PF61	♦SES	499-89
PF62	♦SES	500-103
PF63	♦SES	502-108
PF64	♦SES	503-100
PF65	♦SES	505-109
PF66	♦SES	507-32
PF67	♦SES	508-28
PF68	♦SES	508-75
PF100	♦UNI	601-8
PF100A	♦UNI	601-9
PF200	♦UNI	601-10

TYPE No.	MFRS	Pg&Line
PF200A	♦UNI	601-11
PG107,A,B	TRW	537-10
PG0110D	♦PII	519-48
PG0110F	♦PII	519-49
PG0110H	♦PII	519-50
PG0110J	♦PII	519-51
PG0110K	♦PII	519-52
PG0110L	♦PII	519-53
PG0110N	♦PII	519-54
PG0110P	♦PII	519-55
PG0110Q	♦PII	519-56
PG0110S	♦PII	519-57
PG0110T	♦PII	519-58
PG110,A,B	TRW	541-39
PG0111D	♦PII	520-32
PG0111F	♦PII	520-33
PG0111H	♦PII	520-34
PG0111J	♦PII	520-35
PG0111K	♦PII	520-36
PG0111L	♦PII	520-37
PG0111N	♦PII	520-38
PG0111P	♦PII	520-39
PG0112D	♦PII	523-12
PG0112F	♦PII	523-13
PG0112H	♦PII	523-14
PG0112J	♦PII	523-15
PG0112K	♦PII	523-16
PG0112X	PII	595-110
PG0113X	PII	596-1
PG0114X	PII	596-2
PG0115X	PII	596-3
PG115,A,B	TRW	545-108
PG0122X	PII	596-4
PG122,A,B	TRW	550-56
PG0123X	PII	596-5
PG0124X	PII	596-6
PG0125X	PII	596-7
PG0132X	PII	596-8
PG0133X	PII	596-9
PG133,A,B	TRW	554-42
PG0134X	PII	596-10
PG0135X	PII	596-11
PG139,A,B	TRW	556-13
PG0142X	PII	596-12
PG0143X	PII	596-13
PG0144X	PII	596-14
PG0145X	PII	596-15
PG147,A,B	TRW	557-78
PG0152X	PII	596-16
PG0153X	PII	596-17
PG0154X	PII	596-18
PG0155X	PII	596-19
PG207,A,B	TRW	537-11
PG210,A,B	TRW	541-40
PG215,A,B	TRW	545-109
PG222,A,B	TRW	550-57
PG233,A,B	TRW	554-43
PG239,A,B	TRW	556-14
PG247,A,B	TRW	557-79
PG307,A,B	TRW	537-12
PG310,A,B	TRW	541-41
PG315,A,B	TRW	545-110
PG322,A,B	TRW	550-58
PG333,A,B	TRW	554-44
PG339,A,B	TRW	556-15
PG347,A,B	TRW	557-80
PH204	PHIC	331-30
PH0305	PII	560-108
PH0306	PII	558-94
PH0307	PII	553-3
PH0308	PII	561-1
PH0309	PII	558-95
PH0310	PII	553-4
PH0311	PII	561-2
PH0312	PII	558-96
PH0313	PII	553-5
PH1200-1,2,3,4		520-80
	♦PII	
PH1200A,B-F	♦PII	520-81
PH1200G,H,J-L		520-82
	♦PII	
PH1200N,P,Q	♦PII	520-83
PH1201-1,2,3,4		526-33
	♦PII	
PH1201A,B-F	♦PII	526-34
PH1201G,H,J-L		526-35
	♦PII	
PH1201N,P	♦PII	526-36
PH1202-1,2,3,4		529-58
	♦PII	
PH1202A,B-F	♦PII	529-59
PH1202G,H,J-L		529-60
	♦PII	
PH1202N	♦PII	529-61
PH1203-1,2,3,4		532-53
	♦PII	
PH1203A,B-F	♦PII	563-66
PH1203G,H	♦PII	563-67
PH1204-1,2,3,4		535-47
	♦PII	
PH1204A,B-F	♦PII	535-48
PH1205-1,2,3,4		542-85
	♦PII	
PH1205A,B,C	♦PII	542-86
PH1206-1,2,3,4		547-36
	♦PII	
PH1206A,B	♦PII	547-37
PH1207-1,2,3,4		551-84
	♦PII	
PH1207A,B	♦PII	551-85
PH1210-1,2,3,4		520-84
	♦PII	
PH1210A,B-F	♦PII	520-85

TYPE No.	MFRS	Pg&Line
PH1210G,H,J-L		520-86
	♦PII	
PH1210N,P,Q	♦PII	520-87
PH1211-1,2,3,4		526-37
	♦PII	
PH1211A,B-F	♦PII	526-38
PH1211G,H,J-L		526-39
	♦PII	
PH1211N,P	♦PII	526-40
PH1212-1,2,3,4		529-62
	♦PII	
PH1212A,B-F	♦PII	529-63
PH1212G,H,J-L		529-64
	♦PII	
PH1212N	♦PII	529-65
PH1213-1,2,3,4		532-54
	♦PII	
PH1213A,B-F	♦PII	563-68
PH1213G,H	♦PII	563-69
PH1214-1,2,3,4		535-49
	♦PII	
PH1214A,B-F	♦PII	535-50
PH1215-1,2,3,4		542-87
	♦PII	
PH1215A,B,C	♦PII	542-88
PH1216-1,2,3,4		547-38
	♦PII	
PH1216A,B	♦PII	547-39
PH1217-1,2,3,4		551-86
	♦PII	
PH1217A,B	♦PII	551-87
PH1220-1,2,3,4		520-88
	♦PII	
PH1220A,B-F	♦PII	520-89
PH1220G,H,J-L		520-90
	♦PII	
PH1220N,P	♦PII	520-91
PH1221-1,2,3,4		526-41
	♦PII	
PH1221A,B-F	♦PII	526-42
PH1221G,H,J-L		526-43
	♦PII	
PH1222-1,2,3,4		529-66
	♦PII	
PH1222A,B-F	♦PII	529-67
PH1222G,H,J	♦PII	529-68
PH1223-1,2,3,4		532-55
	♦PII	
PH1223A,B-F	♦PII	563-70
PH1223G,H	♦PII	563-71
PH1224-1,2,3,4		535-51
	♦PII	
PH1224A,B-F	♦PII	535-52
PH1225-1,2,3,4		542-89
	♦PII	
PH1225A,B,C	♦PII	542-90
PH1226-1,2,3,4		547-40
	♦PII	
PH1226A	♦PII	547-41
PH1227-1,2,3,4		551-88
	♦PII	
PH1227A	♦PII	551-89
PH1230-1,2,3,4		520-92
	♦PII	
PH1230A,B-F	♦PII	520-93
PH1230G,H,J-L		520-94
	♦PII	
PH1231-1,2,3,4		526-44
	♦PII	
PH1231A,B-F	♦PII	526-45
PH1231G,H,J	♦PII	526-46
PH1232-1,2,3,4		529-69
	♦PII	
PH1232A,B-F	♦PII	529-70
PH1232G,H	♦PII	529-71
PH1233-1,2,3,4		532-56
	♦PII	
PH1233A,B-E	♦PII	563-72
PH1234-1,2,3,4		535-53
	♦PII	
PH1234A,B,C	♦PII	535-54
PH1235-1,2,3,4		542-91
	♦PII	
PH1235A	♦PII	542-92
PH1236-1,2, 3	♦PII	547-42
PH1237-1,2	♦PII	551-90
PH1240-1,2,3,4		520-95
	♦PII	
PH1240A,B-F	♦PII	520-96
PH1240G,H,J,K		520-97
	♦PII	
PH1241-1,2,3,4		526-47
	♦PII	
PH1241A,B-F	♦PII	526-48
PH1241G,H,J	♦PII	526-49
PH1242-1,2,3,4		529-72
	♦PII	
PH1242A,B-F	♦PII	529-73
PH1242G,H	♦PII	529-74
PH1243-1,2,3,4		532-57
	♦PII	
PH1243A,B-E	♦PII	563-73
PH1244-1,2,3,4		535-55
	♦PII	
PH1244A,B,C	♦PII	535-56
PH1245-1,2,3,4		542-93
	♦PII	
PH1245A	♦PII	542-94
PH1246-1,2, 3	♦PII	547-43
PH1247-1,2	♦PII	551-91
PH1250-1,2,3,4		520-98
	♦PII	
PH1250A,B-F	♦PII	520-99
PH1250G,H,J	♦PII	520-100

TYPE No.	MFRS	Pg&Line
PH1251-1,2,3,4		526-50
	♦PII	
PH1251A,B-F	♦PII	526-51
PH1251G,H	♦PII	526-52
PH1252-1,2,3,4		529-75
	♦PII	
PH1252A,B-F	♦PII	529-76
PH1252G	♦PII	529-77
PH1253-1,2,3,4		532-58
	♦PII	
PH1253A,B-E	♦PII	563-74
PH1254-1,2,3,4		535-57
	♦PII	
PH1254A,B,C	♦PII	535-58
PH1255-1,2,3,4		542-95
	♦PII	
PH1255A	♦PII	542-96
PH1256-1,2, 3	♦PII	547-44
PH1257-1,2	♦PII	551-92
PH1260-1,2,3,4		520-101
	♦PII	
PH1260A,B-F	♦PII	520-102
PH1260G,H	♦PII	520-103
PH1261-1,2,3,4		526-53
	♦PII	
PH1261A,B-F	♦PII	526-54
PH1261G	♦PII	526-55
PH1262-1,2,3,4		529-78
	♦PII	
PH1262A,B-E	♦PII	529-79
PH1263-1,2,3,4		532-59
	♦PII	
PH1263A,B-D	♦PII	563-75
PH1264-1,2,3,4		535-59
	♦PII	
PH1264A,B,C	♦PII	535-60
PH1265-1,2,3,4		542-97
	♦PII	
PH1266-1,2, 3	♦PII	547-45
PH1267-1,2	♦PII	551-93
PH1270-1,2,3,4		520-104
	♦PII	
PH1270A,B-F	♦PII	520-105
PH1270G	♦PII	520-106
PH1271-1,2,3,4		526-56
	♦PII	
PH1271A,B-E	♦PII	526-57
PH1272-1,2,3,4		529-80
	♦PII	
PH1272A,B-D	♦PII	529-81
PH1273-1,2,3,4		532-60
	♦PII	
PH1273A,B,C	♦PII	563-76
PH1274-1,2,3,4		535-61
	♦PII	
PH1274A	♦PII	535-62
PH1275-1,2,3,4		542-98
	♦PII	
PH1276-1,2, 3	♦PII	547-46
PH1277-1,2	♦PII	551-94
PH1280-1,2,3,4		520-107
	♦PII	
PH1280A,B-E	♦PII	520-108
PH1281-1,2,3,4		526-58
	♦PII	
PH1281A,B,C	♦PII	526-59
PH1282-1,2,3,4		529-82
	PII	
PH1282A,B	♦PII	529-83
PH1283-1,2,3,4		532-61
	♦PII	
PH1283A	♦PII	563-77
PH1284-1,2, 3	♦PII	535-63
PH1285-1,2	♦PII	542-99
PH1286-1	♦PII	547-47
PH1287-1	♦PII	551-95
PH1290-1,2,3,4		520-109
	♦PII	
PH1290A,B	♦PII	520-110
PH1291-1,2,3,4		526-60
	♦PII	
PH1291A	♦PII	526-61
PH1292-1,2,3,4		529-84
	♦PII	
PH1293-1,2, 3	♦PII	532-62
PH1294-1,2	♦PII	535-64
PH1295-1	♦PII	542-100
PH1296-1	♦PII	547-48
PH1297-1	♦PII	551-96
PHG1	ESMF	576-37
MISI	♦NPC	
PHG2	ESMF	576-38
MISI	♦NPC	
PIC100	♦UNI	501-104
PIC101	♦UNI	501-105
PIC110	♦UNI	500-41
PK0601	♦PII	511-75
PK0601L	♦PII	511-76
PK0602	♦PII	511-77
PK0602L	♦PII	511-78
PK0603	♦PII	511-79
PK0603L	♦PII	511-80
PK0604	♦PII	511-81
PK0604L	♦PII	511-82
PK0605	♦PII	511-83
PK0605L	♦PII	511-84
PK0606	♦PII	514-37
PK0606L	♦PII	514-38
PK0607	♦PII	514-39
PK0607L	♦PII	514-40
PK0608	♦PII	514-41
PK0608L	♦PII	514-42
PK0609	♦PII	514-43
PK0609L	♦PII	514-44

△-Registered with JEDEC by this manufacturer

♦-Copy of mfr's data sheet may be ordered from D.A.T.A.

1. TYPE No. CROSS INDEX

IN TYPE NUMBER SEQUENCE

TYPE No.	MFRS	Pg&Line
PK0610	♦ PII	514 - 45
PK0610L	♦ PII	514 - 46
PK0620	♦ PII	575 - 19
PK0620L	♦ PII	575 - 20
PK0801	♦ PII	511 - 85
PK0801L	♦ PII	511 - 86
PK0802	♦ PII	511 - 87
PK0802L	♦ PII	511 - 88
PK0803	♦ PII	511 - 89
PK0803L	♦ PII	511 - 90
PK0804	♦ PII	511 - 91
PK0804L	♦ PII	511 - 92
PK0805	♦ PII	511 - 93
PK0805L	♦ PII	511 - 94
PK0806	♦ PII	514 - 47
PK0806L	♦ PII	514 - 48
PK0807	♦ PII	514 - 49
PK0807L	♦ PII	514 - 50
PK0808	♦ PII	514 - 51
PK0808L	♦ PII	514 - 52
PK0809	♦ PII	514 - 53
PK0809L	♦ PII	514 - 54
PK0810	♦ PII	514 - 55
PK0810L	♦ PII	514 - 56
PK0820	♦ PII	575 - 21
PK0820L	♦ PII	575 - 22
PK5101	♦ PII	511 - 95
PK5102	♦ PII	511 - 96
PK5103	♦ PII	511 - 97
PK5104	♦ PII	511 - 98
PK5105	♦ PII	511 - 99
PK5106	♦ PII	514 - 57
PK5107	♦ PII	514 - 58
PK5108	♦ PII	514 - 59
PK5109	♦ PII	514 - 60
PK5110	♦ PII	514 - 61
PL0100-1,2,3,4		521 - 1
	♦ PII	
PL0100A,B-F	♦ PII	521 - 2
PL0100G,H,J-L		521 - 3
	♦ PII	
PL0100N,P,Q	♦ PII	521 - 4
PL0101-1,2,3,4		526 - 62
	♦ PII	
PL0101A,B-F	♦ PII	526 - 63
PL0101G,H,J-L		526 - 64
	♦ PII	
PL0101N,P	♦ PII	526 - 65
PL0102-1,2,3,4		529 - 85
	♦ PII	
PL0102A,B-F	♦ PII	529 - 86
PL0102G,H,J-L		529 - 87
	♦ PII	
PL0102N	♦ PII	529 - 88
PL0103-1,2,3,4		532 - 63
	♦ PII	
PL0103A,B-F	♦ PII	563 - 78
PL0103G,H	♦ PII	563 - 79
PL0104-1,2,3,4		535 - 65
	♦ PII	
PL0104A,B-F	♦ PII	535 - 66
PL0105-1,2,3,4		542 -101
	♦ PII	
PL0105A,B,C	♦ PII	542 -102
PL0106-1,2,3,4		547 - 49
	♦ PII	
PL0106A,B	♦ PII	547 - 50
PL0107-1,2,3,4		551 - 97
	♦ PII	
PL0107A,B	♦ PII	551 - 98
PL0110-1,2,3,4		521 - 5
	♦ PII	
PL0110A,B-F	♦ PII	521 - 6
PL0110G,H,J-L		521 - 7
	♦ PII	
PL0110N,P,Q	♦ PII	521 - 8
PL0111-1,2,3,4		526 - 66
	♦ PII	
PL0111A,B-F	♦ PII	526 - 67
PL0111G,H,J-L	PII	526 - 68
PL0111N,P	♦ PII	526 - 69
PL0112-1,2,3,4		529 - 89
	♦ PII	
PL0112A,B-F	♦ PII	529 - 90
PL0112G,H,J-L		529 - 91
	♦ PII	
PL0112N	♦ PII	529 - 92
PL0113-1,2,3,4		532 - 64
	♦ PII	
PL0113A,B-F	♦ PII	563 - 80
PL0113G,H	♦ PII	563 - 81
PL0114-1,2,3,4		535 - 67
	♦ PII	
PL0114A,B-F	♦ PII	535 - 68
PL0115-1,2,3,4		542 -103
	♦ PII	
PL0115A,B,C	♦ PII	542 -104
PL0116-1,2,3,4		547 - 51
	♦ PII	
PL0116A,B	♦ PII	547 - 52
PL0117-1,2,3,4		551 - 99
	♦ PII	
PL0117A,B	♦ PII	551 -100
PL0120-1,2,3,4		521 - 9
	♦ PII	
PL0120A,B-F	♦ PII	521 - 10
PL0120G,H,J-L		521 - 11
	♦ PII	
PL0120N,P	♦ PII	521 - 12
PL0121-1,2,3,4		526 - 70
	♦ PII	
PL0121A,B-F	♦ PII	526 - 71
PL0121G,H,J-L		526 - 72
	♦ PII	

TYPE No.	MFRS	Pg&Line
PL0122-1,2,3,4		529 - 93
	♦ PII	
PL0122A,B-F	♦ PII	529 - 94
PL0122G,H,J	♦ PII	529 - 95
PL0123-1,2,3,4		532 - 65
	♦ PII	
PL0123A,B-F	♦ PII	563 - 82
PL0123G,H	♦ PII	563 - 83
PL0124-1,2,3,4		535 - 69
	♦ PII	
PL0124A,B-F	♦ PII	535 - 70
PL0125-1,2,3,4		542 -105
	♦ PII	
PL0125A,B,C	♦ PII	542 -106
PL0126-1,2,3,4		547 - 53
	♦ PII	
PL0126A	♦ PII	547 - 54
PL0127-1,2,3,4		551 -101
	♦ PII	
PL0127A	♦ PII	551 -102
PL0130-1,2,3,4		521 - 13
	♦ PII	
PL0130A,B-F	♦ PII	521 - 14
PL0130G,H,J-L		521 - 15
	♦ PII	
PL0131-1,2,3,4		526 - 73
	♦ PII	
PL0131A,B-F	♦ PII	526 - 74
PL0131G,H,J	♦ PII	526 - 75
PL0132-1,2,3,4		529 - 96
	♦ PII	
PL0132A,B-F	♦ PII	529 - 97
PL0132G,H	♦ PII	529 - 98
PL0133-1,2,3,4		532 - 66
	♦ PII	
PL0133A,B-E	♦ PII	563 - 84
PL0134-1,2,3,4		535 - 71
	♦ PII	
PL0134A,B,C	♦ PII	535 - 72
PL0135-1,2,3,4		542 -107
	♦ PII	
PL0135A	♦ PII	542 -108
PL0136-1,2, 3	♦ PII	547 - 55
PL0137-1,2	♦ PII	551 -103
PL0140-1,2,3,4		521 - 16
	♦ PII	
PL0140A,B-F	♦ PII	521 - 17
PL0140G,H,J,K		521 - 18
	♦ PII	
PL0141-1,2,3,4		526 - 76
	♦ PII	
PL0141A,B-F	♦ PII	526 - 77
PL0141G,H,J	♦ PII	526 - 78
PL0142-1,2,3,4		529 - 99
	♦ PII	
PL0142A,B-F	♦ PII	529 -100
PL0142G,H	♦ PII	529 -101
PL0143-1,2,3,4		532 - 67
	♦ PII	
PL0143A,B-E	♦ PII	563 - 85
PL0144-1,2,3,4		535 - 73
	♦ PII	
PL0144A,B,C	♦ PII	535 - 74
PL0145-1,2,3,4		542 -109
	♦ PII	
PL0145A	♦ PII	542 -110
PL0146-1,2, 3	♦ PII	547 - 56
PL0147-1,2	♦ PII	551 -104
PL0150-1,2,3,4		521 - 19
	♦ PII	
PL0150A,B-F	♦ PII	521 - 20
PL0150G,H,J	♦ PII	521 - 21
PL0151-1,2,3,4		526 - 79
	♦ PII	
PL0151A,B-F	♦ PII	526 - 80
PL0151G,H	♦ PII	526 - 81
PL0152-1,2,3,4		529 -102
	♦ PII	
PL0152A,B-F	♦ PII	529 -103
PL0152G	♦ PII	529 -104
PL0153-1,2,3,4		532 - 68
	♦ PII	
PL0153A,B-E	♦ PII	532 - 69
PL0154-1,2,3,4		535 - 75
	♦ PII	
PL0154A,B,C	♦ PII	535 - 76
PL0155-1,2,3,4		543 - 1
	♦ PII	
PL0155A	♦ PII	543 - 2
PL0156-1,2, 3	♦ PII	547 - 57
PL0157-1,2	♦ PII	551 -105
PL0160-1,2,3,4		521 - 22
	♦ PII	
PL0160A,B-F	♦ PII	521 - 23
PL0160G,H	♦ PII	521 - 24
PL0161-1,2,3,4		526 - 82
	♦ PII	
PL0161A,B-F	♦ PII	526 - 83
PL0161G	♦ PII	526 - 84
PL0162-1,2,3,4		529 -105
	♦ PII	
PL0162A,B-E	♦ PII	529 -106
PL0163-1,2,3,4		532 - 70
	♦ PII	
PL0163A,B-D	♦ PII	563 - 86
PL0164-1,2,3,4		535 - 77
	♦ PII	
PL0164A,B,C	♦ PII	535 - 78
PL0165-1,2,3,4		543 - 3
	♦ PII	
PL0166-1,2, 3	♦ PII	547 - 58
PL0167-1,2	♦ PII	551 -106
PL0170-1,2,3,4		521 - 25
	♦ PII	

TYPE No.	MFRS	Pg&Line
PL0170A,B-F	♦ PII	521 - 26
PL0170G	♦ PII	521 - 27
PL0171-1,2,3,4		526 - 85
	♦ PII	
PL0171A,B-E	♦ PII	526 - 86
PL0172-1,2,3,4		529 -107
	♦ PII	
PL0172A,B-D	♦ PII	529 -108
PL0173-1,2,3,4		532 - 71
	♦ PII	
PL0173A,B,C	♦ PII	563 - 87
PL0174-1,2,3,4		535 - 79
	♦ PII	
PL0174A	♦ PII	535 - 80
PL0175-1,2,3,4		543 - 4
	♦ PII	
PL0176-1,2, 3	♦ PII	547 - 59
PL0177-1,2	♦ PII	551 -107
PL0180-1,2,3,4		521 - 28
	♦ PII	
PL0180A,B-E	♦ PII	521 - 29
PL0181-1,2,3,4		526 - 87
	♦ PII	
PL0181A,B,C	♦ PII	526 - 88
PL0182-1,2,3,4		529 -109
	♦ PII	
PL0182A,B	♦ PII	529 -110
PL0183-1,2,3,4		532 - 72
	♦ PII	
PL0183A	♦ PII	563 - 88
PL0184-1,2, 3	♦ PII	535 - 81
PL0185-1,2	♦ PII	543 - 5
PL0186-1	♦ PII	547 - 60
PL0187-1	♦ PII	551 -108
PL0500-1,2,3,4		521 - 30
	PII	
PL0500A,B-F	PII	521 - 31
PL0500G,H,J-L	PII	521 - 32
PL0500N,P,Q	PII	521 - 33
PL0501-1,2,3,4		526 - 89
	PII	
PL0501A,B-F	PII	526 - 90
PL0501G,H,J-L	PII	526 - 91
PL0501N,P	PII	526 - 92
PL0502-1,2,3,4		530 - 1
	PII	
PL0502A,B-F	PII	530 - 2
PL0502G,H,J-L	PII	530 - 3
PL0502N	PII	530 - 4
PL0503-1,2,3,4		532 - 73
	PII	
PL0503A,B-F	PII	563 - 89
PL0503G,H	PII	563 - 90
PL0510-1,2,3,4		521 - 34
	PII	
PL0510A,B-F	PII	521 - 35
PL0510G,H,J-L	PII	521 - 36
PL0510N,P,Q	PII	521 - 37
PL0511-1,2,3,4		526 - 93
	PII	
PL0511A,B-F	PII	526 - 94
PL0511G,H,J-L	PII	526 - 95
PL0511N,P	PII	526 - 96
PL0512-1,2,3,4		530 - 5
	PII	
PL0512A,B-F	PII	530 - 6
PL0512G,H,J-L	PII	530 - 7
PL0512N	PII	530 - 8
PL0513-1,2,3,4		532 - 74
	PII	
PL0513A,B-F	PII	563 - 91
PL0513G,H	PII	563 - 92
PL0520-1,2,3,4		519 - 11
	PII	
PL0520A,B-F	PII	519 - 12
PL0520G,H,J-L	PII	519 - 13
PL0520N,P	PII	519 - 14
PL0521-1,2,3,4		526 - 97
	PII	
PL0521A,B-F	PII	526 - 98
PL0521G,H,J-L	PII	526 - 99
PL0522-1,2,3,4		530 - 9
	PII	
PL0522A,B-F	PII	530 - 10
PL0522G,H,J	PII	530 - 11
PL0523-1,2,3,4		532 - 75
	PII	
PL0523A,B-F	PII	563 - 93
PL0523G,H	PII	563 - 94
PL0530-1,2,3,4		521 - 38
	PII	
PL0530A,B-F	PII	521 - 39
PL0530G,H,J-L	PII	521 - 40
PL0531-1,2,3,4		526 -100
	PII	
PL0531A,B-F	PII	526 -101
PL0531G,H,J	PII	526 -102
PL0532-1,2,3,4		530 - 12
	PII	
PL0532A,B-F	PII	530 - 13
PL0532G,H	PII	530 - 14
PL0533-1,2,3,4		532 - 76
	PII	
PL0533A,B-E	PII	563 - 95
PL0540-1,2,3,4		521 - 41
	PII	
PL0540A,B-F	PII	521 - 42
PL0540G,H,J,K	PII	521 - 43
PL0541-1,2,3,4		526 -103
	PII	
PL0541A,B-F	PII	526 -104
PL0541G,H,J	PII	526 -105
PL0542-1,2,3,4		530 - 15
	PII	

TYPE No.	MFRS	Pg&Line
PL0542A,B-F	PII	530 - 16
PL0542G,H	PII	530 - 17
PL0543-1,2,3,4		532 - 77
	PII	
PL0543A,B-E	PII	519 - 15
PL0550-1,2,3,4		521 - 44
	PII	
PL0550A,B-F	PII	521 - 45
PL0550G,H,J	PII	521 - 46
PL0551-1,2,3,4		526 -106
	PII	
PL0551A,B-F	PII	526 -107
PL0551G,H	PII	526 -108
PL0552-1,2,3,4		530 - 18
	PII	
PL0552A,B-F	PII	530 - 19
PL0552G	PII	530 - 20
PL0553-1,2,3,4		532 - 78
	PII	
PL0553A,B-E	PII	563 - 96
PL0560-1,2,3,4		521 - 47
	PII	
PL0560A,B-F	PII	521 - 48
PL0560G,H	PII	521 - 49
PL0561-1,2,3,4		526 -109
	PII	
PL0561A,B-F	PII	526 -110
PL0561G	PII	527 - 1
PL0562-1,2,3,4		530 - 21
	PII	
PL0562A,B-E	PII	530 - 22
PL0563-1,2,3,4		532 - 79
	PII	
PL0563A,B-D	PII	563 - 97
PL0570-1,2,3,4		521 - 50
	PII	
PL0570A,B-F	PII	521 - 51
PL0570G	PII	521 - 52
PL0571-1,2,3,4		527 - 2
	PII	
PL0571A,B-E	PII	527 - 3
PL0572-1,2,3,4		530 - 23
	PII	
PL0572A,B-D	PII	530 - 24
PL0573-1,2,3,4		532 - 80
	PII	
PL0573A,B,C	PII	563 - 98
PL0580-1,2,3,4		521 - 53
	PII	
PL0580A,B-E	PII	521 - 54
PL0581-1,2,3,4		527 - 4
	PII	
PL0581A,B,C	PII	519 - 30
PL0582-1,2,3,4		530 - 25
	PII	
PL0582A,B	PII	530 - 26
PL0583-1,2,3,4		532 - 81
	PII	
PL0583A	PII	563 - 99
PL0590-1,2,3,4		521 - 55
	PII	
PL0590A,B	PII	521 - 56
PL0591-1,2,3,4		527 - 5
	PII	
PL0591A	PII	519 - 31
PL0592-1,2,3,4		530 - 27
	PII	
PL0593-1,2,3	PII	532 - 82
PL4001	♦ GICI	273 - 12
PL4002	♦ GICI	280 - 13
PL4003	♦ GICI	283 - 67
PL4004	♦ GICI	286 - 12
PL4005	♦ GICI	287 - 71
PL4006	♦ GICI	288 - 11
PL4007	♦ GICI	288 - 67
PM1	TRW	273 - 2
PM021	TRW	272 - 87
PM031	TRW	279 - 67
PM034	TRW	279 - 68
PM041	TRW	283 - 10
PM042	TRW	283 - 11
PM0801	♦ PII	511 -100
PM0801L	♦ PII	511 -101
PM0802	♦ PII	511 -102
PM0802L	♦ PII	511 -103
PM0803	♦ PII	511 -104
PM0803L	♦ PII	511 -105
PM0804	♦ PII	511 -106
PM0804L	♦ PII	511 -107
PM0805	♦ PII	511 -108
PM0805L	♦ PII	511 -109
PM0806	♦ PII	514 - 62
PM0806L	♦ PII	514 - 63
PM0807	♦ PII	514 - 64
PM0807L	♦ PII	514 - 65
PM0808	♦ PII	514 - 66
PM0808L	♦ PII	514 - 67
PM0809	♦ PII	514 - 68
PM0809L	♦ PII	514 - 69
PM0810	♦ PII	514 - 70
PM0810L	♦ PII	514 - 71
PQ1150,A,B	TRW	562 - 81
PQ1300,A,B	TRW	563 - 11
PQ1500,A,B	TRW	563 - 40
PQ2150,A,B	TRW	562 - 82
PQ2300,A,B	TRW	563 - 12
PQ2500,A,B	TRW	563 - 41
PR30	UNI	498 - 39
PR30A	UNI	498 - 40
PR60	♦ UNI	601 - 12
PR60A	♦ UNI	601 - 13
PR100	♦ UNI	601 - 14
PR100A	♦ UNI	601 - 15
PR0101	♦ PII	264 - 89

TYPE No.	MFRS	Pg&Line
PR0102	♦ PII	264 - 97
PR0103	PII	264 - 98
PR0104	♦ PII	266 - 15
PR0105	♦ PII	266 - 16
PR0106	PII	266 - 17
PR0107	♦ PII	267 - 10
PR0108	♦ PII	267 - 13
PR0109	PII	267 - 14
PR0110	PII	267 - 15
PR0111	♦ PII	269 - 91
PR0112	♦ PII	269 - 92
PR0113	♦ PII	273 - 27
PR0114	♦ PII	273 - 28
PR0115	♦ PII	276 - 14
PR0116	PII	276 - 15
PR0117	PII	276 - 16
PR0118	PII	276 -101
PR0119	PII	276 -102
PR0120	PII	276 -103
PR0121	PII	276 -104
PR200	♦ UNI	601 - 16
PR200A	♦ UNI	601 - 17
PRV94	♦ CDLF	578 - 12
PRV100	♦ CDLF	578 - 13
PS005	TRW	292 -101
PS010	TRW	299 - 14
PS015	TRW	307 - 54
PS020	TRW	309 - 84
PS025	TRW	319 - 14
PS030	TRW	320 - 44
PS035	TRW	327 - 27
PS040	TRW	328 - 37
PS050	TRW	339 - 7
PS060	TRW	345 -102
PS105	TRW	293 - 28
PS110	TRW	299 - 64
PS115	TRW	307 - 70
PS0120	♦ PII	588 - 60
PS0120A	♦ PII	588 - 61
PS0120B	♦ PII	588 - 62
PS0120C	♦ PII	588 - 63
PS0120D	♦ PII	588 - 64
PS120	TRW	310 - 24
PS125	TRW	319 - 20
PS0130	♦ PII	588 - 65
PS0130A	♦ PII	588 - 66
PS0130B	♦ PII	588 - 67
PS0130C	♦ PII	588 - 68
PS0130D	♦ PII	588 - 69
PS130	TRW	320 - 82
PS135	TRW	327 - 37
PS0140	♦ PII	588 - 70
PS0140A	♦ PII	588 - 71
PS0140B	♦ PII	588 - 72
PS0140C	♦ PII	588 - 73
PS0140D	♦ PII	588 - 74
PS140	TRW	328 - 93
PS0150	♦ PII	588 - 75
PS0150A	♦ PII	588 - 76
PS0150B	♦ PII	588 - 77
PS0150C	♦ PII	588 - 78
PS0150D	♦ PII	588 - 79
PS150	TRW	339 - 46
PS160	TRW	346 - 36
PS0190	♦ PII	588 - 80
PS0190A	♦ PII	588 - 81
PS405	TRW	293 - 10
PS410	TRW	299 - 39
PS415	TRW	307 - 65
PS420	TRW	309 -109
PS425	TRW	319 - 19
PS430	TRW	320 - 66
PS435	TRW	327 - 33
PS440	TRW	328 - 66
PS450	TRW	339 - 29
PS460	TRW	346 - 17
PS0503AX	♦ PII	588 - 82
PS0503AY	♦ PII	588 - 83
PS0503AZ	♦ PII	588 - 84
PS0503BX	♦ PII	588 - 85
PS0503BY	♦ PII	588 - 86
PS0503BZ	♦ PII	588 - 87
PS0503CX	♦ PII	588 - 88
PS0503CY	♦ PII	588 - 89
PS0503CZ	♦ PII	588 - 90
PS0503DX	♦ PII	588 - 91
PS0503DY	♦ PII	588 - 92
PS0503DZ	♦ PII	588 - 93
PS0503EX	♦ PII	588 - 94
PS0503EY	♦ PII	588 - 95
PS0503EZ	♦ PII	588 - 96
PS0503X	♦ PII	588 - 97
PS0503Y	♦ PII	588 - 98
PS0503Z	♦ PII	588 - 99
PS0505AX	♦ PII	588 -100
PS0505AY	♦ PII	588 -101
PS0505AZ	♦ PII	588 -102
PS0505BX	♦ PII	588 -103
PS0505BY	♦ PII	588 -104
PS0505BZ	♦ PII	588 -105
PS0505CX	♦ PII	588 -106
PS0505CY	♦ PII	588 -107
PS0505CZ	♦ PII	588 -108
PS0505DX	♦ PII	588 -109
PS0505DY	♦ PII	588 -110
PS0505DZ	♦ PII	589 - 1
PS0505EX	♦ PII	589 - 2
PS0505EY	♦ PII	589 - 3
PS0505EZ	♦ PII	589 - 4
PS0505X	♦ PII	589 - 5
PS0505Y	♦ PII	589 - 6
PS0505Z	♦ PII	589 - 7
PS0510AX	♦ PII	589 - 8
PS0510AY	♦ PII	589 - 9

Δ-Registered with JEDEC by this manufacturer

♦-Copy of mfr's data sheet may be ordered from D.A.T.A.

1. TYPE No. CROSS INDEX

IN TYPE NUMBER SEQUENCE

TYPE No.	MFRS	Pg&Line
PS0510AZ	♦ PII	589- 10
PS0510BX	♦ PII	589- 11
PS0510BY	♦ PII	589- 12
PS0510BZ	♦ PII	589- 13
PS0510CX	♦ PII	589- 14
PS0510CY	♦ PII	589- 15
PS0510CZ	♦ PII	589- 16
PS0510DX	♦ PII	589- 17
PS0510DY	♦ PII	589- 18
PS0510DZ	♦ PII	589- 19
PS0510EX	♦ PII	589- 20
PS0510EY	♦ PII	589- 21
PS0510EZ	♦ PII	589- 22
PS0510X	♦ PII	589- 23
PS0510Y	♦ PII	589- 24
PS0510Z	♦ PII	589- 25
PS0515AX	♦ PII	589- 26
PS0515AY	♦ PII	589- 27
PS0515AZ	♦ PII	589- 28
PS0515BX	♦ PII	589- 29
PS0515BY	♦ PII	589- 30
PS0515BZ	♦ PII	589- 31
PS0515CX	♦ PII	589- 32
PS0515CY	♦ PII	589- 33
PS0515CZ	♦ PII	589- 34
PS0515DX	♦ PII	589- 35
PS0515DY	♦ PII	589- 36
PS0515DZ	♦ PII	589- 37
PS0515EX	♦ PII	589- 38
PS0515EY	♦ PII	589- 39
PS0515EZ	♦ PII	589- 40
PS0515X	♦ PII	589- 41
PS0515Y	♦ PII	589- 42
PS0515Z	♦ PII	589- 43
PS0520AX	♦ PII	589- 44
PS0520AY	♦ PII	589- 45
PS0520AZ	♦ PII	589- 46
PS0520BX	♦ PII	589- 47
PS0520BY	♦ PII	589- 48
PS0520BZ	♦ PII	589- 49
PS0520CX	♦ PII	589- 50
PS0520CY	♦ PII	589- 51
PS0520CZ	♦ PII	589- 52
PS0520DX	♦ PII	589- 53
PS0520DY	♦ PII	589- 54
PS0520DZ	♦ PII	589- 55
PS0520EX	♦ PII	589- 56
PS0520EY	♦ PII	589- 57
PS0520EZ	♦ PII	589- 58
PS0520X	♦ PII	589- 59
PS0520Y	♦ PII	589- 60
PS0520Z	♦ PII	589- 61
PS0525AX	♦ PII	589- 62
PS0525AY	♦ PII	589- 63
PS0525AZ	♦ PII	589- 64
PS0525BX	♦ PII	589- 65
PS0525BY	PII	589- 66
PS0525BZ	♦ PII	589- 67
PS0525CX	♦ PII	589- 68
PS0525CY	♦ PII	589- 69
PS0525CZ	♦ PII	589- 70
PS0525DX	♦ PII	589- 71
PS0525DY	♦ PII	589- 72
PS0525DZ	♦ PII	589- 73
PS0525EX	♦ PII	589- 74
PS0525EY	♦ PII	589- 75
PS0525EZ	♦ PII	589- 76
PS0525X	♦ PII	589- 77
PS0525Y	♦ PII	589- 78
PS0525Z	♦ PII	589- 79
PS0530AX	♦ PII	589- 80
PS0530AY	♦ PII	589- 81
PS0530AZ	♦ PII	589- 82
PS0530BX	♦ PII	589- 83
PS0530BY	♦ PII	589- 84
PS0530BZ	♦ PII	589- 85
PS0530CX	♦ PII	589- 86
PS0530CY	♦ PII	589- 87
PS0530CZ	♦ PII	589- 88
PS0530DX	♦ PII	589- 89
PS0530DY	♦ PII	589- 90
PS0530DZ	♦ PII	589- 91
PS0530EX	♦ PII	589- 92
PS0530EY	♦ PII	589- 93
PS0530EZ	♦ PII	589- 94
PS0530X	♦ PII	589- 95
PS0530Y	♦ PII	589- 96
PS0530Z	♦ PII	589- 97
PS592	TRW	581- 99
PS592G	TRW	581-100
PS594	TRW	581-101
PS595	TRW	581-102
PS603	TRW	248- 90
PS604	TRW	248- 91
PS0605AX	PII	589- 98
PS0605AY	PII	589- 99
PS0605AZ	PII	589-100
PS0605BX	PII	589-101
PS0605BY	PII	589-102
PS0605BZ	PII	589-103
PS0605CX	PII	589-104
PS0605CY	PII	589-105
PS0605CZ	PII	589-106
PS0605DX	PII	589-107
PS0605DY	PII	589-108
PS0605DZ	PII	589-109
PS0605X	PII	589-110
PS0605Y	PII	590- 1
PS0605Z	PII	590- 2
PS605	TRW	248- 92
PS609	TRW	252- 54
PS0610AX	PII	590- 3
PS0610AY	PII	590- 4
PS0610AZ	PII	590- 5

TYPE No.	MFRS	Pg&Line
PS0610BX	PII	590- 6
PS0610BY	PII	590- 7
PS0610BZ	PII	590- 8
PS0610CX	PII	590- 9
PS0610CY	PII	590- 10
PS0610CZ	PII	590- 11
PS0610DX	PII	590- 12
PS0610DY	PII	590- 13
PS0610DZ	PII	590- 14
PS0610X	PII	590- 15
PS0610Y	PII	590- 16
PS0610Z	PII	590- 17
PS610	TRW	252- 55
PS611	TRW	252- 56
PS615	TRW	256- 24
PS616	TRW	256- 25
PS617	TRW	256- 26
PS0620AX	PII	590- 18
PS0620AY	PII	590- 19
PS0620AZ	PII	590- 20
PS0620BX	PII	590- 21
PS0620BY	PII	590- 22
PS0620BZ	PII	590- 23
PS0620CX	PII	590- 24
PS0620CY	PII	590- 25
PS0620CZ	PII	590- 26
PS0620DX	PII	590- 27
PS0620DY	PII	590- 28
PS0620DZ	PII	590- 29
PS0620X	PII	590- 30
PS0620Y	PII	590- 31
PS0620Z	PII	590- 32
PS621	TRW	257- 27
PS622	TRW	257- 28
PS623	TRW	257- 29
PS627	TRW	258- 6
PS628	TRW	258- 7
PS629	TRW	258- 8
PS0630AX	PII	590- 33
PS0630AY	PII	590- 34
PS0630AZ	PII	590- 35
PS0630BX	PII	590- 36
PS0630BY	PII	590- 37
PS0630BZ	PII	590- 38
PS0630CX	PII	590- 39
PS0630CY	PII	590- 40
PS0630CZ	PII	590- 41
PS0630DX	PII	590- 42
PS0630DY	PII	590- 43
PS0630DZ	PII	590- 44
PS0630X	PII	590- 45
PS0630Y	PII	590- 46
PS0630Z	PII	590- 47
PS632	TRW	258-109
PS633	TRW	258-110
PS636	TRW	259- 51
PS637	TRW	259- 52
PS0640AX	PII	590- 48
PS0640AY	PII	590- 49
PS0640AZ	PII	590- 50
PS0640BX	PII	590- 51
PS0640BY	PII	590- 52
PS0640BZ	PII	590- 53
PS0640CX	PII	590- 54
PS0640CY	PII	590- 55
PS0640CZ	PII	590- 56
PS0640DX	PII	590- 57
PS0640DY	PII	590- 58
PS0640DZ	PII	590- 59
PS0640X	PII	590- 60
PS0640Y	PII	590- 61
PS0640Z	PII	590- 62
PS645	TRW	581-103
PS645G	TRW	581-104
PS0650AX	PII	590- 63
PS0650AY	PII	590- 64
PS0650AZ	PII	590- 65
PS0650BX	PII	590- 66
PS0650BY	PII	590- 67
PS0650BZ	PII	590- 68
PS0650CX	PII	590- 69
PS0650CY	PII	590- 70
PS0650CZ	PII	590- 71
PS0650DX	PII	590- 72
PS0650DY	PII	590- 73
PS0650DZ	PII	590- 74
PS0650X	PII	590- 75
PS0650Y	PII	590- 76
PS0650Z	PII	590- 77
PS700	TRW	268- 15
PS701	TRW	272- 88
PS702	TRW	276- 56
PS703	TRW	276- 57
PS704	TRW	280- 29
PS705	TRW	280- 30
PS720	TRW	268- 10
PS721	TRW	273- 96
PS722	TRW	279- 69
PS723	TRW	283- 12
PS724	TRW	281- 34
PS0805AX	PII	590- 78
PS0805AY	PII	590- 79
PS0805AZ	PII	590- 80
PS0805BX	PII	590- 81
PS0805BY	PII	590- 82
PS0805BZ	PII	590- 83
PS0805CX	PII	590- 84
PS0805CY	PII	590- 85
PS0805CZ	PII	590- 86
PS0805DX	PII	590- 87
PS0805DY	PII	590- 88
PS0805DZ	PII	590- 89
PS0805X	PII	590- 90
PS0805Y	PII	590- 91

TYPE No.	MFRS	Pg&Line
PS0805Z	PII	590- 92
PS0810AX	PII	590- 93
PS0810AY	PII	590- 94
PS0810AZ	PII	590- 95
PS0810BX	PII	590- 96
PS0810BY	PII	590- 97
PS0810BZ	PII	590- 98
PS0810CX	PII	590- 99
PS0810CY	PII	590-100
PS0810CZ	PII	590-101
PS0810DX	PII	590-102
PS0810DY	PII	590-103
PS0810DZ	PII	590-104
PS0810X	PII	590-105
PS0810Y	PII	590-106
PS0810Z	PII	590-107
PS0820AX	PII	590-108
PS0820AY	PII	590-109
PS0820AZ	PII	590-110
PS0820BX	PII	591- 1
PS0820BY	PII	591- 2
PS0820BZ	PII	591- 3
PS0820CX	PII	591- 4
PS0820CY	PII	591- 5
PS0820CZ	PII	591- 6
PS0820DX	PII	591- 7
PS0820DY	PII	591- 8
PS0820DZ	PII	591- 9
PS0820X	PII	591- 10
PS0820Y	PII	591- 11
PS0820Z	PII	591- 12
PS0830AX	PII	591- 13
PS0830AY	PII	591- 14
PS0830AZ	PII	591- 15
PS0830BX	PII	591- 16
PS0830BY	PII	591- 17
PS0830BZ	PII	591- 18
PS0830CX	PII	591- 19
PS0830CY	PII	591- 20
PS0830CZ	PII	591- 21
PS0830DX	PII	591- 22
PS0830DY	PII	591- 23
PS0830DZ	PII	591- 24
PS0830X	PII	591- 25
PS0830Y	PII	591- 26
PS0830Z	PII	591- 27
PS0840AX	PII	591- 28
PS0840AY	PII	591- 29
PS0840AZ	PII	591- 30
PS0840BX	PII	591- 31
PS0840BY	PII	591- 32
PS0840BZ	PII	591- 33
PS0840CX	PII	591- 34
PS0840CY	PII	591- 35
PS0840CZ	PII	591- 36
PS0840DX	PII	591- 37
PS0840DY	PII	591- 38
PS0840DZ	PII	591- 39
PS0840X	PII	591- 40
PS0840Y	PII	591- 41
PS0840Z	PII	591- 42
PS0850AX	PII	591- 43
PS0850AY	PII	591- 44
PS0850AZ	PII	591- 45
PS0850BX	PII	591- 46
PS0850BY	PII	591- 47
PS0850BZ	PII	591- 48
PS0850CX	PII	591- 49
PS0850CY	PII	591- 50
PS0850CZ	PII	591- 51
PS0850DX	PII	591- 52
PS0850DY	PII	591- 53
PS0850DZ	PII	591- 54
PS0850X	PII	591- 55
PS0850Y	PII	591- 56
PS0850Z	PII	591- 57
PS1132	TRW	408- 26
PS1140	TRW	369- 66
PS1141	TRW	384- 26
PS1142	TRW	389- 73
PS1143	TRW	394- 4
PS1144	TRW	396- 94
PS1145	TRW	399- 34
PS1146	TRW	400-104
PS1147	TRW	403- 57
PS1148	TRW	405- 65
PS1171,A	TRW	165- 66
PS1172,A	TRW	165- 78
PS1173,A	TRW	165- 85
PS1174,A	TRW	165-128
PS1175,A	TRW	165-148
PS1176,A	TRW	165-193
PS1177,A	TRW	166- 75
PS1200	TRW	183- 91
PS1200A	TRW	183- 92
PS1200B	TRW	183- 93
PS1201	TRW	183- 94
PS1201A	TRW	183- 95
PS1201B	TRW	183- 96
PS1202	TRW	183- 97
PS1202A	TRW	183- 98
PS1202B	TRW	183- 99
PS1203	TRW	183-100
PS1203A	TRW	183-101
PS1203B	TRW	183-102
PS1204	TRW	183-103
PS1204A	TRW	183-104
PS1204B	TRW	183-105
PS1205	TRW	183-106
PS1205A	TRW	183-107
PS1205B	TRW	183-108
PS1207	TRW	183-109
PS1207A	TRW	183-110
PS1207B	TRW	183-111

TYPE No.	MFRS	Pg&Line
PS1215	TRW	184-175
PS1215A	TRW	184-176
PS1215B	TRW	184-177
PS1215C	TRW	184-178
PS1325	TRW	175- 18
PS1441	TRW	384- 57
PS1442	TRW	389-110
PS1443	TRW	394- 43
PS1444	TRW	397- 26
PS1445	TRW	399- 74
PS1446	TRW	401- 28
PS1447	TRW	402- 45
PS1448	TRW	403- 90
PS1449	TRW	404- 78
PS1450	TRW	405-104
PS1451	TRW	406- 75
PS1452	TRW	407- 32
PS1453	TRW	407- 67
PS1454	TRW	407-100
PS1455	TRW	408- 49
PS1456	TRW	409- 7
PS1457	TRW	409- 31
PS1458	TRW	409- 59
PS1459	TRW	409- 76
PS1460	TRW	410- 22
PS1501	TRW	183-138
PS1501A	TRW	183-139
PS1502	TRW	200-158
PS1502A	TRW	200-159
PS1503	TRW	210- 79
PS1503A	TRW	210- 80
PS1504	TRW	216- 34
PS1504A	TRW	216- 35
PS1505	TRW	219- 34
PS1505A	TRW	219- 35
PS1506	TRW	222-119
PS1506A	TRW	222-120
PS1507	TRW	225- 91
PS1507A	TRW	225- 92
PS1508	TRW	227- 14
PS1508A	TRW	227- 15
PS1509	TRW	229-165
PS1509A	TRW	229-166
PS1510	TRW	231- 60
PS1510A	TRW	231- 61
PS1511	TRW	187- 60
PS1512	TRW	187- 61
PS1513	TRW	187- 62
PS1514	TRW	187- 63
PS1515	TRW	187- 64
PS1516	TRW	187- 65
PS1517	TRW	187- 66
PS1850	TRW	389- 95
PS1851	TRW	397- 20
PS1852	TRW	399- 81
PS1853	TRW	401- 38
PS2207	TRW	252- 15
PS2208	TRW	252- 16
PS2209	TRW	252- 17
PS2345	TRW	322- 50
PS2346	TRW	348- 99
PS2347	TRW	371- 93
PS2348	TRW	384- 92
PS2349	TRW	390- 33
PS2350	TRW	392- 69
PS2351	TRW	394- 65
PS2352	TRW	395- 83
PS2353	TRW	397- 38
PS2354	TRW	398- 34
PS2355	TRW	399- 94
PS2356	TRW	401- 45
PS2357	TRW	402- 53
PS2358	TRW	403- 97
PS2359	TRW	404- 84
PS2360	TRW	406- 10
PS2411	TRW	292-102
PS2412	TRW	298-104
PS2413	TRW	309- 60
PS2414	TRW	328- 17
PS2415	TRW	345- 78
PS2416	TRW	358-108
PS2417	TRW	369- 37
PS2418	TRW	384- 7
PS2419	TRW	389- 53
PS2422	TRW	389- 38
PS2423	TRW	393- 85
PS2424	TRW	396- 68
PS2425	TRW	399- 22
PS2426	TRW	400- 90
PS2427	TRW	402- 22
PS2428	TRW	403- 52
PS2429	TRW	404- 60
PS2430	TRW	405- 61
PS3200	TRW	405- 74
PS3210	TRW	389- 31
PS3532,A	TRW	165- 53
PS3533,A	TRW	165-104
PS3534,A	TRW	165-187
PS3535	TRW	176-102
PS3535A	TRW	176-103
PS3536	TRW	176-104
PS3536A	TRW	176-105
PS3537	TRW	176-106
PS3537A	TRW	176-107
PS3538	TRW	176-108
PS3538A	TRW	176-109
PS3539	TRW	176-110
PS3539A	TRW	176-111
PS4559	TRW	251- 31
PS4560	TRW	257-105
PS4725	TRW	251- 11
PS5300	TRW	257-106
PS5301	TRW	258-100
PS5302	TRW	259- 64

TYPE No.	MFRS	Pg&Line
PS5303	TRW	259-106
PS5304	TRW	260- 14
PS5570	TRW	601- 18
PS5830	TRW	601- 19
PS5831	TRW	601- 20
PS5832B	TRW	601- 21
PS6319,A	TRW	212-136
PS6320,A	TRW	216- 50
PS6321,A	TRW	219- 28
PS6322	TRW	222- 41
PS6323	TRW	225- 87
PS6324	TRW	228-105
PS6325	TRW	230- 69
PS6326	TRW	234- 91
PS6327	TRW	237- 39
PS6465	TRW	166- 9
PS6466	TRW	167- 92
PS6467	TRW	170- 27
PS6468	TRW	171- 42
PS6469	TRW	173-171
PS6470	TRW	179- 11
PS7267	TRW	269- 65
PS7268	TRW	269- 66
PS7269	TRW	272- 29
PS7270	TRW	280- 41
PS8900	TRW	166-132
PS8901	TRW	167- 33
PS8902	TRW	167-180
PS8903	TRW	168-136
PS8904	TRW	169-132
PS8905	TRW	170-135
PS8906	TRW	171-178
PS8907	TRW	173- 45
PS8908	TRW	175- 19
PS8909	TRW	177-116
PS8910	TRW	179-164
PS8911	TRW	182- 31
PS8912	TRW	185-143
PS8913	TRW	188- 31
PS8914	TRW	190- 37
PS8915	TRW	192-102
PS8916	TRW	194-163
PS8917	TRW	197-120
PS8918	TRW	199-114
PS8919	TRW	202- 27
PS10016B	TRW	178- 14
PS10017B	TRW	180- 58
PS10018B	TRW	182-108
PS10019B	TRW	186- 39
PS10020B	TRW	188-120
PS10021B	TRW	190-112
PS10022B	TRW	193- 12
PS10023B	TRW	195- 49
PS10024B	TRW	198- 18
PS10025B	TRW	199-183
PS10026B	TRW	202-111
PS10060	TRW	178- 15
PS10061	TRW	180- 59
PS10062	TRW	182-109
PS10063	TRW	186- 40
PS10064	TRW	188-121
PS10065	TRW	190-113
PS10066	TRW	193- 13
PS10067	TRW	195- 50
PS10068	TRW	198- 19
PS10069	TRW	199-184
PS10070	TRW	202-112
PSL11A	AEIL	302- 67
PSL12A	AEIL	313- 73
PSV100D	♦ TRW	601- 22
PSV100J	♦ TRW	601- 23
PSV100L	♦ TRW	601- 24
PT520	GICC	310- 95
PT525	GICC	319- 24
PT530	GICC	321- 20
PT540	GICC	329- 69
PT550	GICC	339-106
PT560	GICC	346-101
PT3510	PII	573- 69
PT3511	PII	572- 34
PT3512	PII	572- 35
PT3513	PII	573- 40
PT3514	PII	573- 41
PT3515	PII	573- 42
PT3516	PII	572-102
PT3517	PII	572-103
PT3518	PII	572-104
PT3519	PII	572- 96
PT3520	PII	572- 98
PT3521	PII	572-100
PT3522	PII	572- 36
PT3523	PII	572- 37
PT3524	PII	572- 38
PT3525	PII	571- 68
PT3526	PII	571- 78
PT3527	PII	571- 97
PT3528	PII	571- 47
PT3529	PII	571- 10
PT3530	PII	571- 41
PT3531	PII	570- 37
PT3532	PII	570- 40
PV001,A,B	♦ TRW	557- 81
PV002,A,B	♦ TRW	554- 45
PV003,A,B	♦ TRW	550- 59
PV004,A,B	♦ TRW	557- 82
PV005,A,B	♦ TRW	554- 46
PV006,A,B	♦ TRW	550- 60
PV007,A,B	♦ TRW	557- 83
PV008,A,B	♦ TRW	554- 47
PV009,A,B	♦ TRW	550- 61
PV1430	♦ PII	538- 15
PV1431	♦ PII	541- 42
PV1432	♦ PII	546- 1
PV1433	♦ PII	550- 62

Δ-Registered with JEDEC by this manufacturer

♦-Copy of mfr's data sheet may be ordered from D.A.T.A.

1. TYPE No. CROSS INDEX

IN TYPE NUMBER SEQUENCE

TYPE No.	MFRS	Pg&Line	TYPE No.	MFRS	Pg&Line	TYPE No.	MFRS	Pg&Line	TYPE No.	MFRS	Pg&Line	TYPE No.	MFRS	Pg&Line
PV1434	♦ PII	554 - 48	Q5-100A	IDC	262 - 89	Q18-200D	IDC	265 - 44	Q4001MT1	ECC	503 - 65	Q6040PFC	ECC	507 - 82
PV1435	♦ PII	557 - 84	Q5-100B	IDC	262 - 90	Q18-200T	IDC	265 - 45	Q4001MT2	ECC	503 - 66	Q6040PFD	ECC	507 - 83
PV1858D	♦ TRW	528 - 2	Q5-100C	IDC	262 - 91	Q18-300	IDC	265 - 46	Q4001P	ECC	503 - 67	Q7004	ECC	508 - 22
PV1860D	♦ TRW	531 - 42	Q5-100D	IDC	262 - 92	Q18-300A	IDC	265 - 47	Q4001PS	ECC	503 - 68	Q7004A	ECC	508 - 23
PV1862D	♦ TRW	533 - 11	Q5-100E	IDC	262 - 93	Q18-300B	IDC	265 - 48	Q4001PST	ECC	503 - 69	Q7004B	ECC	508 - 24
PV1863D	♦ TRW	534 - 55	Q5-100T	IDC	262 - 94	Q20-200	IDC	265 - 81	Q4001PT	ECC	503 - 70	Q7004T	ECC	508 - 25
PV1864D	♦ TRW	537 - 13	Q5-200	IDC	262 - 96	Q20-200A	IDC	265 - 82	Q4003P	ECC	503 - 82	Q7004TA	ECC	508 - 26
PV1865D	♦ TRW	539 - 38	Q5-200A	IDC	262 - 97	Q20-200T	IDC	265 - 83	Q4003PT	ECC	503 - 83	Q7004TB	ECC	508 - 27
PV1866D	♦ TRW	541 - 43	Q5-200B	IDC	262 - 98	Q20-300	IDC	265 - 84	Q4004	ECC	503 - 85	Q7006	ECC	498 - 92
PV1868D	♦ TRW	543 - 73	Q5-200C	IDC	262 - 99	Q20-300A	IDC	265 - 85	Q4004A	ECC	503 - 86	Q7006A	ECC	508 - 32
PV1870D	♦ TRW	546 - 2	Q5-200D	IDC	262 -100	Q20-300B	IDC	265 - 86	Q4004B	ECC	503 - 87	Q7006B	ECC	508 - 33
PVM4010,A,B	♦ TRW	528 - 3	Q5-200E	IDC	262 -101	Q20-500	IDC	265 - 89	Q4004T	ECC	503 - 88	Q7006T	ECC	498 - 93
PVM4022,A,B	♦ TRW	531 - 43	Q5-200T	IDC	262 -102	Q20-750	IDC	265 - 92	Q4004TA	ECC	503 - 89	Q7006TA	ECC	508 - 34
PVM4033,A,B	♦ TRW	533 - 12	Q5-250	IDC	262 - 95	Q20-950	IDC	265 - 94	Q4004TB	ECC	503 - 90	Q7006TB	ECC	508 - 35
PVM4039,A,B	♦ TRW	533 - 53	Q5-300	IDC	262 -103	Q30-200	IDC	268 - 60	Q4006	ECC	504 - 11	Q7008	ECC	508 - 38
PVM4047,A,B	♦ TRW	534 - 56	Q5-300A	IDC	262 -104	Q30-200A	IDC	268 - 61	Q4006A	ECC	504 - 12	Q7008A	ECC	508 - 39
PVM4056,A,B	♦ TRW	535 - 15	Q5-300B	IDC	262 -105	Q30-300	IDC	268 - 62	Q4006B	ECC	504 - 13	Q7008B	ECC	508 - 40
PVM4068,A,B	♦ TRW	537 - 14	Q5-500	IDC	263 - 33	Q30-300A	IDC	268 - 63	Q4006T	ECC	504 - 14	Q7008T	ECC	508 - 41
PVM4082,A,B	♦ TRW	539 - 39	Q6-100	IDC	263 - 7	Q30-300B	IDC	268 - 64	Q4006TA	ECC	504 - 15	Q7008TA	ECC	508 - 42
PVM4100,A,B	♦ TRW	541 - 44	Q6-100A	IDC	263 - 8	Q30-500	IDC	268 - 53	Q4006TB	ECC	504 - 16	Q7008TB	ECC	508 - 43
PVM4120,A,B	♦ TRW	543 - 74	Q6-100B	IDC	263 - 9	Q30-500A	IDC	268 - 54	Q4008	ECC	498 - 98	Q7010	ECC	508 - 48
PVM4150,A,B	♦ TRW	546 - 3	Q6-100C	IDC	263 - 10	Q30-750	IDC	267 - 79	Q4008A	ECC	504 - 38	Q7010A	ECC	508 - 49
PVM4180,A,B	♦ TRW	548 - 4	Q6-100D	IDC	263 - 11	Q30-950	IDC	267 - 80	Q4008B	ECC	504 - 39	Q7010B	ECC	508 - 50
PVM4220,A,B	♦ TRW	550 - 63	Q6-100E	IDC	263 - 12	Q40-200	IDC	269 - 96	Q4008T	ECC	498 - 99	Q7010T	ECC	508 - 51
PVM6010,A,B	♦ TRW	528 - 4	Q6-100F	IDC	263 - 13	Q40-200A	IDC	269 - 97	Q4008TA	ECC	504 - 40	Q7010TA	ECC	508 - 52
PVM6022,A,B	♦ TRW	531 - 44	Q6-100G	IDC	263 - 14	Q40-300	IDC	269 - 98	Q4008TB	ECC	504 - 41	Q7010TB	ECC	508 - 53
PVM6033,A,B	♦ TRW	533 - 13	Q6-100H	IDC	263 - 15	Q40-300A	IDC	269 - 99	Q4010	ECC	504 - 46	Q7015	ECC	508 - 54
PVM6039,A,B	♦ TRW	533 - 54	Q6-100I	IDC	263 - 28	Q40-300B	IDC	269 -100	Q4010A	ECC	504 - 47	Q7015A	ECC	508 - 55
PVM6047,A,B	♦ TRW	534 - 57	Q6-100J	IDC	263 - 29	Q40-500	IDC	269 - 93	Q4010B	ECC	504 - 48	Q7015B	ECC	508 - 56
PVM6056,A,B	♦ TRW	535 - 16	Q6-100K	IDC	263 - 30	Q40-500A	IDC	269 - 94	Q4010T	ECC	504 - 49	Q7015T	ECC	508 - 57
PVM6068,A,B	♦ TRW	537 - 15	Q6-100L	IDC	263 - 31	Q40-750	IDC	269 - 47	Q4010TA	ECC	504 - 50	Q7015TA	ECC	508 - 58
PVM6082,A,B	♦ TRW	539 - 40	Q6-100T	IDC	263 - 16	Q40-950	IDC	269 - 49	Q4010TB	ECC	504 - 51	Q7015TB	ECC	508 - 59
PVM6100,A,B	♦ TRW	541 - 45	Q6-200	IDC	263 - 34	Q50-200	IDC	271 - 13	Q4015	ECC	504 - 74	Q7025	♦ ECC	508 - 62
PVM6120,A,B	♦ TRW	543 - 75	Q6-200A	IDC	263 - 35	Q50-200A	IDC	271 - 14	Q4015A	ECC	504 - 75	Q7025C	♦ ECC	508 - 63
PVM6150,A,B	♦ TRW	546 - 4	Q6-200B	IDC	263 - 36	Q50-300	IDC	271 - 15	Q4015B	ECC	504 - 76	Q7025D	♦ ECC	508 - 64
PVM6180,A,B	♦ TRW	548 - 5	Q6-200C	IDC	263 - 37	Q50-300A	IDC	271 - 16	Q4015T	ECC	504 - 77	Q8004	ECC	508 - 69
PVM6220,A,B	♦ TRW	550 - 64	Q6-200D	IDC	263 - 38	Q50-300B	IDC	271 - 17	Q4015TA	ECC	504 - 78	Q8004A	ECC	508 - 70
PZ6A	SOIF	178 -136	Q6-200E	IDC	263 - 39	Q50-500	IDC	271 - 18	Q4015TB	ECC	504 - 79	Q8004B	ECC	508 - 71
PZ8A	SOIF	183 - 48	Q6-200F	IDC	263 - 40	Q50-500A	IDC	271 - 19	Q4025	♦ ECC	504 - 82	Q8004T	ECC	508 - 72
PZ10A	SOIF	189 - 70	Q6-200G	IDC	263 - 41	Q50-750	IDC	271 - 78	Q4025C	♦ ECC	504 - 83	Q8004TA	ECC	508 - 73
PZ10B	SOIF	234 - 34	Q6-200H	IDC	263 - 42	Q50-950	IDC	271 - 82	Q4025D	♦ ECC	504 - 84	Q8004TB	ECC	508 - 74
PZ12A	SOIF	193 -162	Q6-200I	IDC	263 - 43	Q55☑	NPC	559 - 9	Q4040PF	ECC	504 - 94	Q8006	ECC	498 - 94
PZ12B	SOIF	237 - 17	Q6-200J	IDC	263 - 44	Q60-500	IDC	273 - 44	Q4040PFC	ECC	504 - 95	Q8006A	ECC	508 - 79
PZ15A	SOIF	198 -164	Q6-200K	IDC	263 - 45	Q60-500A	IDC	273 - 45	Q4040PFD	ECC	504 - 96	Q8006B	ECC	508 - 80
PZ15B	SOIF	240 - 32	Q6-200L	IDC	263 - 46	Q60-750	IDC	273 - 59	Q5004	ECC	505 -103	Q8006T	ECC	498 - 95
PZ18A	SOIF	203 - 57	Q6-200T	IDC	263 - 47	Q60-950	IDC	273 - 62	Q5004A	ECC	505 -104	Q8006TA	ECC	508 - 81
PZ18B	SOIF	242 -154	Q6-250	IDC	263 - 57	Q70-500	IDC	274 - 35	Q5004B	ECC	505 -105	Q8006TB	ECC	508 - 82
PZ22A	SOIF	207 -179	Q6-300	IDC	263 - 48	Q70-500A	IDC	274 - 36	Q5004T	ECC	505 -106	Q8008	ECC	508 - 85
PZ27A	SOIF	212 - 48	Q6-300A	IDC	263 - 49	Q80-500	IDC	276 - 30	Q5004TA	ECC	505 -107	Q8008A	ECC	508 - 86
PZ33A	SOIF	216 - 3	Q6-300B	IDC	263 - 50	Q80-500A	IDC	276 - 31	Q5004TB	ECC	505 -108	Q8008B	ECC	508 - 87
PZ39A	SOIF	218 -165	Q6-400	IDC	263 - 51	Q80-750	IDC	276 - 35	Q5006	ECC	498 - 88	Q8008T	ECC	508 - 88
PZ47A	SOIF	222 - 3	Q6-400A	IDC	263 - 52	Q80-950	IDC	276 - 37	Q5006A	ECC	506 - 18	Q8008TA	ECC	508 - 89
PZ56A	SOIF	225 - 45	Q6-400B	IDC	263 - 53	Q90-500	IDC	276 - 76	Q5006B	ECC	506 - 19	Q8008TB	ECC	508 - 90
PZ68A	SOIF	228 - 42	Q6-500	IDC	263 - 59	Q100-500	IDC	277 -102	Q5006T	ECC	498 - 89	Q8010	ECC	508 - 95
PZ82A	SOIF	231 - 31	Q6/1	ITTE	251 - 69	Q100-500A	IDC	277 -103	Q5006TA	ECC	506 - 20	Q8010A	ECC	508 - 96
PZ140B	♦ TUNL	316 - 74	Q6/2	ITTE	255 - 43	Q100-750	IDC	278 - 23	Q5006TB	ECC	506 - 21	Q8010B	ECC	508 - 97
PZ140D	♦ TUNL	335 - 77	Q6/3	ITTE	257 - 81	Q100-950	IDC	278 - 24	Q5008	ECC	506 - 39	Q8010T	ECC	508 - 98
PZ140F	♦ TUNL	352 - 66	Q6/4	ITTE	258 - 55	Q110-500	IDC	280 - 19	Q5008A	ECC	506 - 40	Q8010TA	ECC	508 - 99
PZ140H	♦ TUNL	364 - 75	Q6/5	ITTE	259 - 24	Q2001M1	ECC	500 - 62	Q5008B	ECC	506 - 41	Q8010TB	ECC	508 -100
PZ140K	♦ TUNL	374 - 43	Q7-050	IDC	263 - 4	Q2001M2	ECC	500 - 63	Q5008T	ECC	506 - 42	Q8015	ECC	508 -101
PZT8 2	USS	183 - 49	Q7-100	IDC	263 - 32	Q2001MS1	ECC	500 - 64	Q5008TA	ECC	506 - 43	Q8015A	ECC	508 -102
PZT10	USS	189 - 71	Q7-250	IDC	263 - 54	Q2001MS2	ECC	500 - 65	Q5008TB	ECC	506 - 44	Q8015B	ECC	508 -103
PZT12	USS	193 -163	Q8-200	IDC	263 - 76	Q2001MST1	ECC	500 - 66	Q5010	ECC	506 - 50	Q8015T	ECC	508 -104
PZT15	USS	198 -165	Q8-200A	IDC	263 - 77	Q2001MST2	ECC	500 - 67	Q5010A	ECC	506 - 51	Q8015TA	ECC	508 -105
PZT18	USS	203 - 58	Q8-200B	IDC	263 - 78	Q2001MT1	ECC	500 - 68	Q5010B	ECC	506 - 52	Q8015TB	ECC	508 -106
PZT22	USS	207 -180	Q8-200C	IDC	263 - 79	Q2001MT2	ECC	500 - 69	Q5010T	ECC	506 - 53	Q8025	♦ ECC	508 -109
PZT27	USS	212 - 49	Q8-200D	IDC	263 - 80	Q2001P	ECC	500 - 70	Q5010TA	ECC	506 - 54	Q8025C	♦ ECC	508 -110
PZT33	USS	216 - 4	Q8-200T	IDC	263 - 81	Q2001PS	ECC	500 - 71	Q5010TB	ECC	506 - 55	Q8025D	♦ ECC	509 - 1
Q1-100	IDC	262 - 9	Q8-300	IDC	263 - 82	Q2001PST	ECC	500 - 72	Q5015	ECC	506 - 73	R1/1H	ITTE	251 - 54
Q1-100A	IDC	262 - 10	Q8-300A	IDC	263 - 83	Q2001PT	ECC	500 - 73	Q5015A	ECC	506 - 74	R1/2H	ITTE	255 - 32
Q1-100B	IDC	262 - 11	Q8-300B	IDC	263 - 84	Q2003P	ECC	500 - 85	Q5015B	ECC	506 - 75	R1/3H	ITTE	257 - 70
Q1-100C	IDC	262 - 12	Q8/1	ITTE	251 - 76	Q2003PT	ECC	500 - 86	Q5015T	ECC	506 - 76	R1/4H	ITTE	258 - 44
Q1-100D	IDC	262 - 13	Q8/2	ITTE	255 - 49	Q2004	ECC	500 - 88	Q5015TA	ECC	506 - 77	R1LB	VAC	580 - 33
Q1-100E	IDC	262 - 14	Q8/3	ITTE	257 - 87	Q2004A	ECC	500 - 89	Q5015TB	ECC	506 - 78	R3/1H	ITTE	251 - 61
Q1-100T	IDC	262 - 15	Q8/4	ITTE	258 - 61	Q2004B	ECC	500 - 90	Q5025	♦ ECC	506 - 81	R3/2H	ITTE	255 - 38
Q1-200	IDC	262 - 16	Q8/5	ITTE	259 - 29	Q2004T	ECC	500 - 91	Q5025C	♦ ECC	506 - 82	R3/3H	ITTE	257 - 76
Q1-200A	IDC	262 - 17	Q10	NPC	539 - 98	Q2004TA	ECC	500 - 92	Q5025D	♦ ECC	506 - 83	R3/4H	ITTE	258 - 50
Q1-200B	IDC	262 - 18	Q10-100	IDC	264 - 15	Q2004TB	ECC	500 - 93	Q5040PF	ECC	506 - 91	R4HZ	SOIF	335 - 88
Q1/1	ITTE	251 - 53	Q10-100T	IDC	264 - 16	Q2006	ECC	501 - 14	Q5040PFC	ECC	506 - 92	R5LB	VAC	580 - 34
Q1/2	ITTE	255 - 31	Q10-200	IDC	264 - 48	Q2006A	ECC	501 - 15	Q5040PFD	ECC	506 - 93	R6	GICI	346 - 81
Q1/3	ITTE	257 - 69	Q10-200A	IDC	264 - 49	Q2006B	ECC	501 - 16	Q6004	ECC	507 - 26	R6/1H	ITTE	251 - 70
Q1/4	ITTE	258 - 43	Q10-200B	IDC	264 - 50	Q2006T	ECC	501 - 17	Q6004A	ECC	507 - 27	R6/2H	ITTE	255 - 44
Q1/5	ITTE	259 - 14	Q10-200C	IDC	264 - 51	Q2006TA	ECC	501 - 18	Q6004B	ECC	507 - 28	R6/3H	ITTE	257 - 82
Q2-100	IDC	262 - 31	Q10-200D	IDC	264 - 52	Q2006TB	ECC	501 - 19	Q6004T	ECC	507 - 29	R6/4H	ITTE	258 - 56
Q2-100A	IDC	262 - 32	Q10-200T	IDC	264 - 53	Q2008	ECC	498 - 96	Q6004TA	ECC	507 - 30	R6HZ	SOIF	352 - 74
Q2-100B	IDC	262 - 33	Q10-250	IDC	264 - 59	Q2008A	ECC	501 - 41	Q6004TB	ECC	507 - 31	R8/1H	ITTE	251 - 77
Q2-100C	IDC	262 - 34	Q10-300	IDC	264 - 54	Q2008B	ECC	501 - 42	Q6006	ECC	498 - 90	R8/2H	ITTE	255 - 50
Q2-100D	IDC	262 - 35	Q10-300A	IDC	264 - 55	Q2008T	ECC	498 - 97	Q6006A	ECC	507 - 39	R8/3H	ITTE	257 - 88
Q2-100E	IDC	262 - 36	Q10-300B	IDC	264 - 56	Q2008TA	ECC	501 - 43	Q6006B	ECC	507 - 40	R8/4H	ITTE	258 - 62
Q2-100T	IDC	262 - 37	Q10-500	IDC	264 - 57	Q2008TB	ECC	501 - 44	Q6006T	ECC	498 - 91	R8HZ	SOIF	364 - 84
Q2-200	IDC	262 - 38	Q10-750	IDC	264 - 61	Q2010	ECC	501 - 49	Q6006TA	ECC	507 - 41	R10EB	VAC	580 - 35
Q2-200A	IDC	262 - 39	Q10-950	IDC	264 - 63	Q2010A	ECC	501 - 50	Q6006TB	ECC	507 - 42	R10LB	VAC	580 - 36
Q2-200B	IDC	262 - 40	Q12-200	IDC	264 - 72	Q2010B	ECC	501 - 51	Q6008	ECC	507 - 47	R10MB	VAC	580 - 37
Q3-90T	IDC	262 - 64	Q12-200A	IDC	264 - 73	Q2010T	ECC	501 - 52	Q6008A	ECC	507 - 48	R43HZ	SOIF	335 - 94
Q3-100T	IDC	262 - 65	Q12-200B	IDC	264 - 74	Q2010TA	ECC	501 - 53	Q6008B	ECC	507 - 49	R63HZ	SOIF	352 - 78
Q3-200	IDC	262 - 54	Q12-200C	IDC	264 - 75	Q2010TB	ECC	501 - 54	Q6008T	ECC	507 - 50	R75EB	VAC	580 - 38
Q3-200A	IDC	262 - 55	Q12-200D	IDC	264 - 76	Q2015	ECC	501 - 77	Q6008TA	ECC	507 - 51	R75LB	VAC	580 - 39
Q3-200B	IDC	262 - 56	Q12-200T	IDC	264 - 77	Q2015A	ECC	501 - 78	Q6008TB	ECC	507 - 52	R83HZ	SOIF	364 - 87
Q3-200C	IDC	262 - 57	Q12-300	IDC	264 - 78	Q2015B	ECC	501 - 79	Q6010	ECC	507 - 56	R100GB	VAC	580 - 40
Q3-200D	IDC	262 - 58	Q12-300A	IDC	264 - 79	Q2015T	ECC	501 - 80	Q6010A	ECC	507 - 57	R100KB	VAC	580 - 41
Q3-200E	IDC	262 - 59	Q12-300B	IDC	264 - 80	Q2015TA	ECC	501 - 81	Q6010B	ECC	507 - 58	R100LB	VAC	580 - 42
Q3-200T	IDC	262 - 60	Q15-200	IDC	264 -109	Q2015TB	ECC	501 - 82	Q6010T	ECC	507 - 59	R100MB	VAC	580 - 43
Q3-300	IDC	262 - 61	Q15-200A	IDC	264 -110	Q2025	♦ ECC	501 - 85	Q6010TA	ECC	507 - 60	R200	♦ SCO	312 - 39
Q3-300A	IDC	262 - 62	Q15-200B	IDC	265 - 1	Q2025C	♦ ECC	501 - 86	Q6010TB	ECC	507 - 61	R400	♦ SCO	331 - 20
Q3-300B	IDC	262 - 63	Q15-200C	IDC	265 - 2	Q2025D	♦ ECC	501 - 87	Q6015	ECC	507 - 66	R600	♦ SCO	348 - 41
Q3-500	IDC	262 - 74	Q15-200D	IDC	265 - 3	Q2040PF	ECC	501 - 97	Q6015A	ECC	507 - 67	R800	♦ SCO	361 - 16
Q3/1	ITTE	251 - 60	Q15-200T	IDC	265 - 4	Q2040PFC	ECC	501 - 98	Q6015B	ECC	507 - 68	R1000	♦ SCO	371 - 51
Q3/2	ITTE	255 - 37	Q15-300	IDC	265 - 5	Q2040PFD	ECC	501 - 99	Q6015T	ECC	507 - 69	RA132AA	ITT	294 - 71
Q3/3	ITTE	257 - 75	Q15-300A	IDC	265 - 6	Q4001M1	ECC	503 - 59	Q6015TA	ECC	507 - 70	RA132BA	ITT	301 - 67
Q3/4	ITTE	258 - 49	Q15-300B	IDC	265 - 7	Q4001M2	ECC	503 - 60	Q6015TB	ECC	507 - 71	RA132DA	ITT	312 - 66
Q3/5	ITTE	259 - 19	Q18-200	IDC	265 - 40	Q4001MS1	ECC	503 - 61	Q6025	♦ ECC	507 - 74	RA132FA	ITT	322 - 30
Q4-100	IDC	262 - 73	Q18-200A	IDC	265 - 41	Q4001MS2	ECC	503 - 62	Q6025C	♦ ECC	507 - 75	RA132HA	ITT	331 - 49
Q4-500	IDC	262 - 75	Q18-200B	IDC	265 - 42	Q4001MST1	ECC	503 - 63	Q6025D	♦ ECC	507 - 76	RA132KA	ITT	341 - 1
Q5-100	IDC	262 - 88	Q18-200C	IDC	265 - 43	Q4001MST2	ECC	503 - 64	Q6040PF	ECC	507 - 81	RA132MA	ITT	348 - 75

△-Registered with JEDEC by this manufacturer

♦-Copy of mfr's data sheet may be ordered from D.A.T.A.

1. TYPE No. CROSS INDEX

IN TYPE NUMBER SEQUENCE

TYPE No.	MFRS	Pg&Line
RA132PA	ITT	355-105
RA132RA	ITT	361- 44
RA132VA	ITT	371- 78
RAB005	EDI	272- 33
RAB010	EDI	278- 91
RAB020	EDI	282- 49
RAB040	EDI	285- 22
RAB060	EDI	286- 88
RAS310AF	ITTB	378- 58
RAS508AF,BF	ITTB	373- 14
RAS508CF,DF	ITTB	373- 71
RCD12	♦ EDI	290-108
RCD15	♦ EDI	291- 16
RCD20	♦ EDI	291- 43
RCD25	♦ EDI	291- 55
RCD30	♦ EDI	291- 68
RCD40	♦ EDI	291- 83
RCD50	♦ EDI	291- 95
RD4A	NECJ	169- 27
RD5A	NECJ	171- 39
RD5B	NECJ	171- 43
RD5C	NECJ	171- 44
RD5D	NECJ	171- 45
RD6A	NECJ	173-161
RD6B	NECJ	173-173
RD6C	NECJ	173-174
RD6D	NECJ	173-177
RD7A	APD	178-193
	NECJ	
RD7B	NECJ	179- 13
RD7C	NECJ	179- 14
RD7D	NECJ	179- 15
RD7H	NECJ	178-165
RD8H	NECJ	183- 76
RD9A	APD	184- 63
	NECJ	
RD9B	NECJ	184- 65
RD9C	NECJ	184- 66
RD9D	NECJ	184- 67
RD10H	NECJ	187- 52
RD11A	APD	189-111
	NECJ	
RD11B	NECJ	189-115
RD11C	NECJ	189-116
RD11D	NECJ	189-119
RD13A	APD	194- 9
	NECJ	
RD13B	NECJ	194- 54
RD13C	NECJ	194- 55
RD13D	NECJ	194- 57
RD16A	APD	199- 2
	NECJ	
RD16B	NECJ	199- 8
RD16C	NECJ	199- 9
RD16D	NECJ	199- 11
RD19A	APD	203-103
	NECJ	
RD19B	NECJ	203-175
RD19C	NECJ	204- 11
RD19D	NECJ	204- 29
RD24A	APD	208- 31
	NECJ	
RD24B	NECJ	208- 36
RD24C	NECJ	208- 37
RD24D	NECJ	208- 39
RD29A	APD	212-134
	NECJ	
RD29B	NECJ	212-137
RD29C	NECJ	212-138
RD29D	NECJ	212-139
RD35A	NECJ	216- 61
RD35B	NECJ	216- 53
RD35C	NECJ	216- 55
RD35D	NECJ	216- 57
RD515	SOIF	250- 74
RD1015	SOIF	254- 47
RD2015	SOIF	257- 65
RD3015	SOIF	258-107
RD4015	SOIF	259- 80
RF100	FSC	248- 37
RF101	FSC	248- 38
RF160A	♦ EDI	288-100
RF160B	♦ EDI	288-101
RF200A	♦ EDI	288-106
RF200B	♦ EDI	289- 4
RF300	FSC	255- 23
RF400	FSC	247- 85
RF401	FSC	247- 86
RFD8	♦ EDI	290- 56
RFD10	♦ EDI	290- 88
RHP3	EDI	289- 39
RHP4	EDI	289- 61
RHP5	EDI	289- 88
RHP6	EDI	290- 8
RHP7	EDI	290- 28
RHP8	EDI	290- 57
RHP9	EDI	290- 71
RHP10	EDI	290- 89
RHP15	EDI	291- 17
RHP20	EDI	291- 44
RHP25	EDI	291- 56
RHP30	EDI	291- 69
RHP35	EDI	291- 76
RHP40	EDI	291- 84
RHP45	EDI	291- 91
RHP50	EDI	291- 96
RIB005	♦ EDI	272- 34
RIB010	♦ EDI	278- 92
RIB020	♦ EDI	282- 50
RIB040	♦ EDI	285- 23
RIB060	♦ EDI	286- 89
RIB080	♦ EDI	287- 83
RIB100	♦ EDI	288- 22
RK300A	♦ EDI	289- 29

TYPE No.	MFRS	Pg&Line
RK300B	♦ EDI	289- 34
RK400A	EDI	289- 53
RK400B	EDI	289- 58
RK500A	♦ EDI	289- 78
RK500B	♦ EDI	289- 83
RK600A	♦ EDI	290- 1
RK600B	♦ EDI	290- 3
RL005	EDI	272- 35
RL010	EDI	278- 93
RL020	EDI	282- 51
RL31	SHWG	249- 43
RL32	SHWG	249- 44
RL32G	SHWG	248-110
RL34	SHWG	251- 90
RL34G	SHWG	251- 6
RL040	EDI	285- 24
RL41	SHWG	247- 54
RL41G	SHWG	247- 1
RL42	SHWG	246- 9
RL43	SHWG	253- 30
RL43G	SHWG	252- 60
RL44	SHWG	254- 57
RL44G	SHWG	253- 77
RL52	SHWG	247- 97
RL060	EDI	286- 90
RL080	EDI	287- 84
RL100	EDI	288- 23
RL232	SHWG	601-.25
RL232B	SHWG	601- 26
RL232G	SHWG	249- 1
RL246	SHWG	249- 45
RL247	SHWG	252- 61
RL247G	SHWG	252- 62
RL252	SHWG	247- 98
RN515	SOIF	296- 86
RN820	SOIF	364- 83
RN835	SOIF	364- 96
RN1015	SOIF	304- 66
RN1115	SOIF	374- 7
RN1120	SOIF	305- 40
RN1135	SOIF	374- 56
RN1220	SOIF	379- 69
RN1520	SOIF	385- 16
RN2015	SOIF	315- 98
RN3015	SOIF	324- 79
RN4015	SOIF	334-105
RN5015	SOIF	343- 22
RN6015	SOIF	351-108
RN8015	SOIF	364- 34
RPX50	♦ TIIB	272-100
RPX100	♦ TIIB	279- 98
RPX200	♦ TIIB	283- 31
RPX400	♦ TIIB	285- 83
RPX600	♦ TIIB	287- 34
RPX800	♦ TIIB	287- 93
RPY13	PHIC	580- 44
RPY14	PHIC	578- 14
RPY15	MULB	578- 15
	PHIC	
RPY17	PHIC	578- 16
RPY18	PHIC	578- 17
RPY19	PHIC	578- 18
RPY20	PHIC	578- 19
RPY23	PHIC	578- 20
RPY33	♦ RADF	578- 21
RPY41	♦ RADF	578- 22
RPY43	♦ RADF	578- 23
RS05	♦ EDI	272- 89
RS6	♦ CRL	173-188
RS10	♦ EDI	279- 70
RS20	♦ EDI	283- 13
RS30	♦ EDI	284- 51
RS40	♦ EDI	285- 72
RS50	EDI	286- 50
RS60	♦ EDI	287- 13
RS80	♦ EDI	287- 94
RS100	♦ EDI	288- 42
RT05	EDI	272- 90
RT6	♦ CRL	173-189
RT10	EDI	279- 71
RT20	EDI	283- 14
RT30	EDI	284- 52
RT40	EDI	285- 73
RT60	EDI	287- 14
RT80	EDI	287- 95
RT100	EDI	288- 43
RTA0101	TEC	414- 12
RTA0103	TEC	416- 28
RTA0106	TEC	421- 72
RTA0110	TEC	423- 12
RTA0115	TEC	430- 8
RTA0120	TEC	432- 16
RTB0101	TEC	414- 13
RTB0103	TEC	416- 29
RTB0106	TEC	421- 73
RTB0110	TEC	423- 13
RTB0115	TEC	430- 9
RTB0120	TEC	432- 17
RTB0125	TEC	440- 59
RTB0130	TEC	442- 19
RTB0201	TEC	414- 14
RTB0203	TEC	416- 30
RTB0206	TEC	421- 74
RTB0210	TEC	423- 14
RTB0215	TEC	430- 10
RTB0220	TEC	432- 18
RTB0225	TEC	440- 60
RTB0230	TEC	442- 20
RTB0301	TEC	414- 15
RTB0303	TEC	416- 31
RTB0306	TEC	421- 75
RTB0315	TEC	423- 15
RTB0320	TEC	430- 11
RTB0320	TEC	432- 19

TYPE No.	MFRS	Pg&Line
RTB0325	TEC	440- 61
RTB0330	TEC	442- 21
RTB0401	TEC	414- 16
RTB0403	TEC	416- 32
RTB0406	TEC	421- 76
RTB0410	TEC	423- 16
RTB0415	TEC	430- 12
RTB0420	TEC	432- 20
RTB0425	TEC	440- 62
RTB0430	TEC	442- 22
RTB0501	TEC	414- 17
RTB0503	TEC	416- 33
RTB0506	TEC	421- 77
RTB0510	TEC	423- 17
RTB0515	TEC	430- 13
RTB0520	TEC	432- 21
RTB0525	TEC	440- 63
RTB0530	TEC	442- 23
RTB0601	TEC	414- 18
RTB0603	TEC	416- 34
RTB0606	TEC	421- 78
RTB0610	TEC	423- 18
RTB0615	TEC	430- 14
RTB0620	TEC	432- 22
RTC05	♦ EDI	272- 91
RTC10	♦ EDI	279- 72
RTC20	♦ EDI	283- 15
RTC40	♦ EDI	285- 74
RTC60	♦ EDI	287- 35
RTC80	♦ EDI	287- 96
RTC0101	TEC	414- 19
RTC0103	TEC	416- 35
RTC0106	TEC	421- 79
RTC0110	TEC	423- 19
RTC0115	TEC	430- 15
RTC0120	TEC	432- 23
RTC0125	TEC	440- 64
RTC0130	TEC	442- 24
RTC0201	TEC	414- 20
RTC0203	TEC	416- 36
RTC0206	TEC	421- 80
RTC0210	TEC	423- 20
RTC0215	TEC	430- 16
RTC0220	TEC	432- 24
RTC0225	TEC	440- 65
RTC0230	TEC	442- 25
RTC0301	TEC	414- 21
RTC0303	TEC	416- 37
RTC0306	TEC	421- 81
RTC0310	TEC	423- 21
RTC0315	TEC	430- 17
RTC0320	TEC	432- 25
RTC0325	TEC	440- 66
RTC0330	TEC	442- 26
RTC0401	TEC	414- 22
RTC0403	TEC	416- 38
RTC0406	TEC	421- 82
RTC0410	TEC	423- 22
RTC0415	TEC	430- 18
RTC0420	TEC	432- 26
RTC0425	TEC	440- 67
RTC0430	TEC	442- 27
RTC0501	TEC	414- 23
RTC0503	TEC	416- 39
RTC0506	TEC	421- 83
RTC0510	TEC	423- 23
RTC0515	TEC	430- 19
RTC0520	TEC	432- 27
RTC0525	TEC	440- 68
RTC0530	TEC	442- 28
RTC0601	TEC	414- 24
RTC0603	TEC	416- 40
RTC0606	TEC	421- 84
RTC0610	TEC	423- 24
RTC0615	TEC	430- 20
RTC0620	TEC	432- 28
RTD08	♦ EDI	290- 49
RTD10	♦ EDI	290- 81
RTD12	♦ EDI	290-104
RTD14	♦ EDI	291- 8
RTD16	♦ EDI	291- 27
RTD18	♦ EDI	291- 30
RTD20	♦ EDI	291- 38
RTD25	♦ EDI	291- 53
RTD30	♦ EDI	291- 65
RTD40	♦ EDI	291- 80
RTD50	♦ EDI	291- 93
RTD0101	TEC	414- 43
RTD0103	TEC	416- 86
RTD0106	TEC	422- 23
RTD0110	TEC	423-100
RTD0115	TEC	430- 36
RTD0120	TEC	432- 93
RTD0125	TEC	440- 74
RTD0130	TEC	442- 58
RTD0135	TEC	447-110
RTD0140	TEC	449- 5
RTD0201	TEC	414- 44
RTD0203	TEC	416- 87
RTD0206	TEC	422- 24
RTD0210	TEC	423-101
RTD0215	TEC	430- 37
RTD0220	TEC	432- 94
RTD0225	TEC	440- 75
RTD0230	TEC	442- 59
RTD0235	TEC	448- 1
RTD0240	TEC	449- 6
RTD0301	TEC	414- 45
RTD0303	TEC	416- 88
RTD0306	TEC	422- 25
RTD0310	TEC	423-102
RTD0315	TEC	430- 38
RTD0320	TEC	432- 95
RTD0325	TEC	440- 76

TYPE No.	MFRS	Pg&Line
RTD0330	TEC	442- 60
RTD0335	TEC	448- 2
RTD0340	TEC	449- 7
RTD0401	TEC	414- 46
RTD0403	TEC	416- 89
RTD0406	TEC	422- 26
RTD0410	TEC	423-103
RTD0415	TEC	430- 39
RTD0420	TEC	432- 96
RTD0425	TEC	440- 77
RTD0430	TEC	442- 61
RTD0435	TEC	448- 3
RTD0440	TEC	449- 8
RTD0501	TEC	414- 47
RTD0503	TEC	416- 90
RTD0506	TEC	422- 27
RTD0510	TEC	423-104
RTD0515	TEC	430- 40
RTD0520	TEC	432- 97
RTD0525	TEC	440- 78
RTD0530	TEC	442- 62
RTD0535	TEC	448- 4
RTD0540	TEC	449- 9
RTD0601	TEC	414- 48
RTD0603	TEC	416- 91
RTD0606	TEC	422- 28
RTD0610	TEC	423-105
RTD0615	TEC	430- 41
RTD0620	TEC	432- 98
RTF0101	TEC	414- 49
RTF0103	TEC	416- 92
RTF0106	TEC	422- 29
RTF0110	TEC	423-106
RTF0115	TEC	430- 42
RTF0120	TEC	432- 99
RTF0125	TEC	440- 79
RTF0130	TEC	442- 63
RTF0135	TEC	448- 5
RTF0140	TEC	449- 10
RTF0201	TEC	414- 50
RTF0203	TEC	416- 93
RTF0206	TEC	422- 30
RTF0210	TEC	423-107
RTF0215	TEC	430- 43
RTF0220	TEC	432-100
RTF0225	TEC	440- 80
RTF0230	TEC	442- 64
RTF0235	TEC	448- 6
RTF0240	TEC	449- 11
RTF0301	TEC	414- 51
RTF0303	TEC	416- 94
RTF0306	TEC	422- 31
RTF0310	TEC	423-108
RTF0315	TEC	430- 44
RTF0320	TEC	432-101
RTF0325	TEC	440- 81
RTF0330	TEC	442- 65
RTF0335	TEC	448- 7
RTF0340	TEC	449- 12
RTF0401	TEC	414- 52
RTF0403	TEC	416- 95
RTF0406	TEC	422- 32
RTF0410	TEC	423-109
RTF0415	TEC	430- 45
RTF0420	TEC	432-102
RTF0425	TEC	440- 82
RTF0430	TEC	442- 66
RTF0435	TEC	448- 8
RTF0440	TEC	449- 13
RTF0501	TEC	414- 53
RTF0503	TEC	416- 96
RTF0506	TEC	422- 33
RTF0510	TEC	423-110
RTF0515	TEC	430- 46
RTF0520	TEC	432-103
RTF0525	TEC	440- 83
RTF0530	TEC	442- 67
RTF0535	TEC	448- 9
RTF0540	TEC	449- 14
RTF0601	TEC	414- 54
RTF0603	TEC	416- 97
RTF0606	TEC	422- 34
RTF0610	TEC	424- 1
RTF0615	TEC	430- 47
RTF0620	TEC	432-104
RTGC0101	TEC	497- 14
RTGC0103	TEC	497- 28
RTGC0106	TEC	497- 43
RTGC0110	TEC	497- 59
RTGC0115	TEC	497- 70
RTGC0120	TEC	497- 86
RTGC0125	TEC	497- 94
RTGC0130	TEC	497-100
RTGD0101	TEC	497- 17
RTGD0103	TEC	497- 30
RTGD0106	TEC	497- 46
RTGD0110	TEC	497- 62
RTGD0115	TEC	497- 72
RTGD0120	TEC	497- 88
RTGD0125	TEC	497- 96
RTGD0130	TEC	497-101
RTH0101	TEC	414- 4
RTH0103	TEC	416- 18
RTH0106	TEC	421- 58
RTH0110	TEC	422-110
RTH0115	TEC	430- 2
RTH0120	TEC	432- 5
RTH0125	TEC	440- 54
RTH0130	TEC	442- 10
RTH0201	TEC	414- 5
RTH0203	TEC	416- 19
RTH0206	TEC	421- 59
RTH0210	TEC	423- 1
RTH0215	TEC	430- 3

TYPE No.	MFRS	Pg&Line
RTH0220	TEC	432- 6
RTH0225	TEC	440- 55
RTH0230	TEC	442- 11
RTH0301	TEC	414- 6
RTH0303	TEC	416- 20
RTH0306	TEC	421- 60
RTH0310	TEC	423- 2
RTH0315	TEC	430- 4
RTH0320	TEC	432- 7
RTH0325	TEC	440- 56
RTH0330	TEC	442- 12
RTH0401	TEC	414- 7
RTH0403	TEC	416- 21
RTH0406	TEC	421- 61
RTH0410	TEC	423- 3
RTH0415	TEC	430- 5
RTH0420	TEC	432- 8
RTH0425	TEC	440- 57
RTH0430	TEC	442- 13
RTH0501	TEC	414- 8
RTH0503	TEC	416- 22
RTH0506	TEC	421- 62
RTH0510	TEC	423- 4
RTH0515	TEC	430- 6
RTH0520	TEC	432- 9
RTH0525	TEC	440- 58
RTH0530	TEC	442- 14
RTH0601	TEC	414- 9
RTH0603	TEC	416- 23
RTH0606	TEC	421- 63
RTH0610	TEC	423- 5
RTH0615	TEC	430- 7
RTH0620	TEC	432- 10
RTJ0201	♦ TEC	414- 37
RTJ0203	♦ TEC	416- 73
RTJ0206	♦ TEC	422- 14
RTJ0210	♦ TEC	423- 75
RTJ0215	♦ TEC	430- 30
RTJ0220	♦ TEC	432- 65
RTJ0225	♦ TEC	440- 70
RTJ0230	♦ TEC	442- 42
RTJ0501	♦ TEC	414- 38
RTJ0503	♦ TEC	416- 74
RTJ0506	♦ TEC	422- 15
RTJ0510	♦ TEC	423- 76
RTJ0515	♦ TEC	430- 31
RTJ0520	♦ TEC	432- 66
RTJ0525	♦ TEC	440- 71
RTJ0530	♦ TEC	442- 43
RTN0102	TEC	414-101
RTN0105	TEC	418- 53
RTN0110	TEC	424- 62
RTN0120	TEC	433- 68
RTN0130	TEC	442-105
RTN0140	TEC	449- 74
RTN0150	TEC	457- 46
RTN0160	TEC	463- 23
RTN0202	TEC	415- 6
RTN0205	TEC	418-100
RTN0210	TEC	425- 8
RTN0220	TEC	434- 23
RTN0230	TEC	443- 32
RTN0240	TEC	450- 20
RTN0250	TEC	457- 74
RTN0260	TEC	463- 59
RTN0302	TEC	415- 7
RTN0305	TEC	418-101
RTN0310	TEC	425- 9
RTN0320	TEC	434- 24
RTN0330	TEC	443- 33
RTN0340	TEC	450- 21
RTN0350	TEC	457- 75
RTN0360	TEC	463- 60
RTN0402	TEC	415- 8
RTN0405	TEC	418-102
RTN0410	TEC	425- 10
RTN0420	TEC	434- 25
RTN0430	TEC	443- 34
RTN0440	TEC	450- 22
RTN0450	TEC	457- 76
RTN0460	TEC	463- 61
RTN0502	TEC	415- 9
RTN0505	TEC	418-103
RTN0510	TEC	425- 11
RTN0520	TEC	434- 26
RTN0530	TEC	443- 35
RTN0540	TEC	450- 23
RTN0550	TEC	457- 77
RTN0560	TEC	463- 62
RTN0602	TEC	415- 10
RTN0605	TEC	418-104
RTN0610	TEC	425- 12
RTN0620	TEC	434- 27
RTN0630	TEC	443- 36
RTN0640	TEC	450- 24
RTN0650	TEC	457- 78
RTN0660	TEC	463- 63
RTPC0101	TEC	498- 25
RTPC0103	TEC	498- 34
RTPC0106	TEC	498- 49
RTPC0110	TEC	498- 54
RTPC0115	TEC	498- 61
RTPC0120	TEC	498- 68
RTPC0201	TEC	498- 26
RTPC0203	TEC	498- 35
RTPC0206	TEC	498- 50
RTPC0210	TEC	498- 55
RTPC0215	TEC	498- 62
RTPC0220	TEC	498- 69
RTR0102	TEC	414- 98
RTR0105	TEC	418- 50
RTR0110	TEC	424- 59
RTR0120	TEC	433- 65
RTR0130	TEC	442-102

Δ-Registered with JEDEC by this manufacturer

♦-Copy of mfr's data sheet may be ordered from D.A.T.A.

1. TYPE No. CROSS INDEX

IN TYPE NUMBER SEQUENCE

TYPE No.	MFRS	Pg&Line
RTR0140	TEC	449- 71
RTR0150	TEC	457- 43
RTR0160	TEC	463- 20
RTR0202	TEC	414-107
RTR0205	TEC	418- 87
RTR0210	TEC	424-103
RTR0220	TEC	434- 7
RTR0230	TEC	443- 22
RTR0240	TEC	450- 6
RTR0250	TEC	457- 59
RTR0260	TEC	463- 44
RTR0302	TEC	414-108
RTR0305	TEC	418- 88
RTR0310	TEC	424-104
RTR0320	TEC	434- 8
RTR0330	TEC	443- 23
RTR0340	TEC	450- 7
RTR0350	TEC	457- 60
RTR0360	TEC	463- 45
RTR0402	TEC	414-109
RTR0405	TEC	418- 89
RTR0410	TEC	424-105
RTR0420	TEC	434- 9
RTR0430	TEC	443- 24
RTR0440	TEC	450- 8
RTR0450	TEC	457- 61
RTR0460	TEC	463- 46
RTR0502	TEC	415- 11
RTR0505	TEC	418-105
RTR0510	TEC	425- 13
RTR0520	TEC	434- 28
RTR0530	TEC	443- 37
RTR0540	TEC	450- 25
RTR0550	TEC	457- 79
RTR0560	TEC	463- 64
RTS0102	TEC	414-102
RTS0105	TEC	418- 54
RTS0110	TEC	424- 63
RTS0120	TEC	433- 69
RTS0130	TEC	442-106
RTS0140	TEC	449- 75
RTS0150	TEC	457- 47
RTS0160	TEC	463- 24
RTS0202	TEC	415- 12
RTS0205	TEC	418-106
RTS0210	TEC	425- 14
RTS0220	TEC	434- 29
RTS0230	TEC	443- 38
RTS0240	TEC	450- 26
RTS0250	TEC	457- 80
RTS0260	TEC	463- 65
RTS0302	TEC	415- 13
RTS0305	TEC	418-107
RTS0310	TEC	425- 15
RTS0320	TEC	434- 30
RTS0330	TEC	443- 39
RTS0340	TEC	450- 27
RTS0350	TEC	457- 81
RTS0360	TEC	463- 66
RTS0402	TEC	415- 14
RTS0405	TEC	418-108
RTS0410	TEC	425- 16
RTS0420	TEC	434- 31
RTS0430	TEC	443- 40
RTS0440	TEC	450- 28
RTS0450	TEC	457- 82
RTS0460	TEC	463- 67
RTS0502	TEC	415- 15
RTS0505	TEC	418-109
RTS0510	TEC	425- 17
RTS0520	TEC	434- 32
RTS0530	TEC	443- 41
RTS0540	TEC	450- 29
RTS0550	TEC	457- 83
RTS0560	TEC	463- 68
RTT0102	TEC	415- 29
RTT0105	TEC	419- 66
RTT0110	TEC	426- 9
RTT0120	TEC	435- 41
RTT0130	TEC	443-108
RTT0140	TEC	451- 39
RTT0150	TEC	458- 31
RTT0160	TEC	464- 50
RTT0202	TEC	415- 39
RTT0205	TEC	419-110
RTT0210	TEC	426- 93
RTT0220	TEC	436- 21
RTT0230	TEC	444- 52
RTT0240	TEC	452- 13
RTT0250	TEC	458- 96
RTT0260	TEC	465- 26
RTT0302	TEC	415- 40
RTT0305	TEC	420- 1
RTT0310	TEC	426- 94
RTT0320	TEC	436- 22
RTT0330	TEC	444- 53
RTT0340	TEC	452- 14
RTT0350	TEC	458- 97
RTT0360	TEC	465- 27
RTT0402	TEC	415- 30
RTT0405	TEC	419- 67
RTT0410	TEC	426- 10
RTT0420	TEC	435- 42
RTT0430	TEC	443-109
RTT0440	TEC	451- 40
RTT0450	TEC	458- 32
RTT0460	TEC	464- 51
RTT0502	TEC	415- 41
RTT0505	TEC	420- 2
RTT0510	TEC	426- 95
RTT0520	TEC	436- 23
RTT0530	TEC	444- 54
RTT0540	TEC	452- 15
RTT0550	TEC	458- 98

TYPE No.	MFRS	Pg&Line
RTT0560	TEC	465- 28
RTT0602	TEC	415- 42
RTT0605	TEC	420- 3
RTT0610	TEC	426- 96
RTT0620	TEC	436- 24
RTT0630	TEC	444- 55
RTT0640	TEC	452- 16
RTT0650	TEC	458- 99
RTT0660	TEC	465- 29
RTU0102	TEC	415- 31
RTU105	TEC	419- 68
RTU110	TEC	426- 11
RTU120	TEC	435- 43
RTU130	TEC	443-110
RTU140	TEC	451- 41
RTU150	TEC	458- 33
RTU160	TEC	464- 52
RTU0202	TEC	415- 43
RTU0205	TEC	420- 4
RTU0210	TEC	426- 97
RTU0220	TEC	436- 25
RTU0230	TEC	444- 56
RTU0240	TEC	452- 17
RTU0250	TEC	458-100
RTU0260	TEC	465- 30
RTU0302	TEC	415- 44
RTU0305	TEC	420- 5
RTU0310	TEC	426- 98
RTU0320	TEC	436- 26
RTU0330	TEC	444- 57
RTU0340	TEC	452- 18
RTU0350	TEC	458-101
RTU0360	TEC	465- 31
RTU0402	TEC	415- 32
RTU0405	TEC	419- 69
RTU0410	TEC	426- 12
RTU0420	TEC	435- 44
RTU0430	TEC	444- 1
RTU0440	TEC	451- 42
RTU0450	TEC	458- 34
RTU0460	TEC	464- 53
RTU0502	TEC	415- 45
RTU0505	TEC	420- 6
RTU0510	TEC	426- 99
RTU0520	TEC	436- 27
RTU0530	TEC	444- 58
RTU0540	TEC	452- 19
RTU0550	TEC	458-102
RTU0560	TEC	465- 32
RTU0602	TEC	415- 46
RTU0605	TEC	420- 7
RTU0610	TEC	426-100
RTU0620	TEC	436- 28
RTU0630	TEC	444- 59
RTU0640	TEC	452- 20
RTU0650	TEC	458-103
RTU0660	TEC	465- 33
RV6 2	LTTF	174- 70
RV15	SOIF	408- 36
RVP5	EDI	289- 89
RVP6	EDI	290- 9
RVP7	EDI	290- 29
RVP8	EDI	290- 58
RVP9	EDI	290- 72
RVP10	EDI	290- 90
RVP15	EDI	291- 18
RVP20	EDI	291- 45
RVP25	EDI	291- 57
RVP30	EDI	291- 70
RVP35	EDI	291- 77
RVP40	EDI	291- 85
RVP45	EDI	291- 92
RVP50	EDI	291- 97
RW15	SOIF	408- 37
RX5LB	VAC	580- 45
RX10LB	VAC	580- 46
RX15	SOIF	408- 50
RX15LB	VAC	580- 47
RX80EB	VAC	580- 48
RX80HB	VAC	580- 49
RX80LB	VAC	580- 50
RX80TB	VAC	580- 51
RY10U	SOIF	290- 21
RY15	SOIF	408- 51
RZ3 3	LTTF	166-151
RZ3 6	LTTF	167-107
RZ3 9	LTTF	168- 54
RZ4 3	LTTF	169- 52
RZ4 7	LTTF	170- 36
RZ5 1	LTTF	171- 86
RZ5 6	LTTF	172- 92
RZ6A	SOIF	178-143
RZ6 2	LTTF	174- 64
RZ6 8	LTTF	176-188
RZ7 5	LTTF	179- 30
RZ08	♦EDI	290- 59
RZ8A	SOIF	183- 58
RZ8 2	LTTF	181- 77
RZ9 1	LTTF	184-211
RZ10△	LTTF	187- 67
RZ10#	♦EDI	290- 91
RZ10A	SOIF	187- 82
RZ10B	SOIF	232-192
RZ11	LTTF	189-124
RZ12△	LTTF	191-152
RZ12#	♦EDI	290-109
RZ12A	SOIF	191-165
RZ12B	SOIF	235-176
RZ13	LTTF	194- 60
RZ14	♦EDI	291- 10
RZ15	LTTF	196-177
RZ15A	SOIF	197- 5
RZ15B	SOIF	240- 35
RZ16	♦EDI	291- 29

TYPE No.	MFRS	Pg&Line
RZ18△	LTTF	201- 80
RZ18#	♦EDI	291- 33
RZ18A	SOIF	201- 89
RZ18B	SOIF	242-157
RZ20	♦EDI	291- 46
RZ22	LTTF	206- 29
RZ22A	SOIF	206- 38
RZ25	♦EDI	291- 58
RZ27	LTTF	210- 99
RZ27A	SOIF	210-108
RZ30	♦EDI	291- 71
RZ33A	SOIF	214- 94
RZ39A	SOIF	217-136
RZ40	♦EDI	291- 86
RZ47A	SOIF	220-161
RZ50	♦EDI	291- 98
RZ56A	SOIF	224- 12
RZ68A	SOIF	227- 20
RZ82A	SOIF	230- 20
RZZ3 3	LTTF	166-152
RZZ3 6	LTTF	167-108
RZZ3 9	LTTF	168- 55
RZZ4 3	LTTF	169- 53
RZZ4.7	LTTF	170- 37
RZZ5 1	LTTF	171- 87
RZZ5 6	LTTF	172- 93
RZZ6 2	LTTF	174- 65
RZZ6 8	LTTF	176-189
RZZ7 5	LTTF	179- 31
RZZ8 2	LTTF	181- 78
RZZ9 1	LTTF	184-212
RZZ10	LTTF	187- 68
RZZ11	LTTF	189-125
RZZ12	LTTF	191-153
RZZ13	LTTF	194- 61
RZZ15	LTTF	196-178
RZZ18	LTTF	201- 81
RZZ22	LTTF	206- 30
RZZ27	LTTF	210-100
S1A	ORIJ	329-100
S1AN6	♦WESB	303- 72
S1AN12	♦WESB	304- 16
S1AN15	♦WESB	304- 69
S1AN20	♦WESB	304-101
S1AN31	♦WESB	305- 34
S1AN40	♦WESB	305- 56
S1AN55	♦WESB	305- 74
S1AN70	♦MAHA	298- 84
S1AN71	♦WESB	305- 87
S1AN125	HIN	298- 86
♦MAHA	♦WESB	
S1B	ORIJ	347- 21
S1BN15	WESB	304- 70
S1BN20	WESB	304-102
S1BN31	WESB	305- 35
S1BN40	WESB	305- 57
S1BN55	WESB	305- 75
S1BN71	WESB	305- 88
S1BN200	WESB	306- 43
S1BR2	HIN	303- 12
S1BR8	HIN	304- 83
S1BR25	HIN	298- 76
	♦MAHA	
S1BR30	♦MAHA	298- 80
S1BR70	♦MAHA	298- 85
S1BR125	♦WESB	306- 22
S1BR501	♦WESB	307- 14
S1C	ORIJ	360- 17
S1CN1	♦WESB	298- 73
S1CR25	♦MAHA	298- 77
S1CR30	♦MAHA	298- 81
S1D	ORIJ	370- 61
S1DR25	♦MAHA	298- 78
S1DR30	♦MAHA	298- 82
S1EN270	HIN	306- 79
	♦WESB	
S1EN290	HIN	306- 94
	♦WESB	
S1EN300	HIN	306-102
S1EN301	HIN	306- 85
S1EN310	♦WESB	306- 98
S1EN350	HIN	306-105
	♦WESB	
S1ER25	♦MAHA	298- 79
S1ER30	♦MAHA	298- 83
S1FN270	♦WESB	306- 80
S1FN290	♦WESB	306- 95
S1FN301	HIN	306- 86
S1FN310	♦WESB	306- 99
S1FN350	♦WESB	306-106
S1GN55	WESB	305- 76
S1GN71	WESB	305- 89
S1GN270	♦WESB	306- 81
S1GN290	♦WESB	306- 96
S1GN301	HIN	306- 87
S1GN310	♦WESB	306-100
S1GN350	♦WESB	306-104
S1GR311	♦WESB	307- 8
S1HN270	HIN	306- 82
	♦WESB	
S1HN290	HIN	306- 97
	♦WESB	
S1HN300	HIN	306-103
S1HN301	HIN	306- 88
S1HN310	♦WESB	306-101
S1HN350	HIN	306-107
	♦WESB	
S1HR311	♦WESB	307- 9
S1KN125	♦WESB	306- 23
S1LB	VAC	580- 52
S1LN125	♦WESB	306- 26
S1M1	♦WESB	294- 93
S1M2	♦WESB	298- 72
S1M3	♦WESB	303- 26

TYPE No.	MFRS	Pg&Line
S1N4245	♦SET	283- 37
S1N4247	♦SET	287- 39
S1N4249	♦SET	288- 46
S1N4942	♦SET	282- 35
S1N4946	♦SET	286- 93
S1N4948	♦SET	288- 24
S1N5199	♦SET	283- 38
S1N5201	♦SET	287- 40
S1N5417	♦SET	282- 36
S1N5419	♦SET	286- 41
S1PN125	♦WESB	306- 21
S1S	ORIJ	311- 14
S1SS	ORIJ	300- 38
S1V1D	INRB	593- 93
INRC	INRI	
	INRJ	
S1V1P	INRB	593- 94
INRC	INRI	
	INRJ	
S1W1P	INRB	593- 95
INRC	INRI	
	INRJ	
S1X1P	INRB	593- 96
INRC	INRI	
	INRJ	
S1Y1D	INRB	593- 97
INRC	INRI	
	INRJ	
S1Y1P	INRB	593- 98
INRC	INRI	
	INRJ	
S1Z1P	INRB	593- 99
INRC	INRI	
	INRJ	
S02	SES	247- 32
S2A10	SHEJ	301-100
S2A20	SHEJ	312-100
S2A30	SHEJ	322- 57
S2A40	SHEJ	331- 85
S2A50	SHEJ	341- 23
S2A60	SHEJ	348-109
S2A80	SHEJ	361- 75
S2A100	SHEJ	371-104
S2AN6	♦WESB	314- 92
S2AN12	♦WESB	315- 41
S2AN15	♦WESB	315-101
S2AN20	♦WESB	316- 25
S2AN31	♦WESB	316- 76
S2AN40	♦WESB	316-101
S2AN55	♦WESB	317- 14
S2AN70	♦MAHA	309- 44
S2AN71	♦WESB	317- 30
S2AN125	HIN	309- 46
♦MAHA	♦WESB	
S2BN15	WESB	315-102
S2BN20	WESB	316- 26
S2BN31	WESB	316- 77
S2BN40	WESB	316-102
S2BN55	WESB	317- 15
S2BN71	WESB	317- 31
S2BN200	WESB	317-103
S2BR2	HIN	314- 21
S2BR8	HIN	316- 8
S2BR25	HIN	309- 36
	♦MAHA	
S2BR30	♦MAHA	309- 40
S2BR70	♦MAHA	309- 45
S2BR125	♦WESB	317- 81
S2BR501	♦WESB	318- 80
S2CN1	♦WESB	309- 34
S2CR25	♦MAHA	309- 37
S2CR30	♦MAHA	309- 41
S2DR25	♦MAHA	309- 38
S2DR30	♦MAHA	309- 42
S2E20	SHEJ	310- 27
S2E60	SHEJ	346- 39
S2E100	SHEJ	369-103
S2EN270	HIN	318- 30
	♦WESB	
S2EN290	HIN	318- 47
	♦WESB	
S2EN300	HIN	318- 55
S2EN301	HIN	318- 35
S2EN310	♦WESB	318- 51
S2EN350	HIN	318- 57
	♦WESB	
S2ER25	♦MAHA	309- 39
S2ER30	♦MAHA	309- 43
S2FN270	♦WESB	318- 31
S2FN290	♦WESB	318- 48
S2FN301	HIN	318- 36
S2FN310	♦WESB	318- 52
S2FN350	♦WESB	318- 58
S2GN55	WESB	317- 16
S2GN71	WESB	317- 32
S2GN270	♦WESB	318- 32
S2GN290	♦WESB	318- 49
S2GN301	HIN	318- 37
S2GN310	♦WESB	318- 53
S2GN350	♦WESB	318- 59
S2GR311	♦WESB	318- 72
S2HN270	HIN	318- 33
	♦WESB	
S2HN290	HIN	318- 50
	♦WESB	
S2HN300	HIN	318- 56
S2HN301	HIN	318- 38
S2HN310	♦WESB	318- 54
S2HN350	HIN	318- 60
	♦WESB	
S2HR311	♦WESB	318- 73
S2KN125	♦WESB	317- 82
S2LB	VAC	580- 53
S2LN125	♦WESB	317- 85

TYPE No.	MFRS	Pg&Line
S2M1	♦WESB	301-101
S2M2	♦WESB	309- 33
S2M3	♦WESB	314- 35
S2PN125	♦WESB	317- 80
S2V1D	INRB	593-100
INRC	INRI	
	INRJ	
S2V1P	INRB	593-101
INRC	INRI	
	INRJ	
S2V2D	INRB	593-102
INRC	INRI	
	INRJ	
S2V2P	INRB	593-103
INRC	INRI	
	INRJ	
S2W1P	INRB	593-104
INRC	INRI	
	INRJ	
S2W2P	INRB	593-105
INRC	INRI	
	INRJ	
S2X1P	INRB	593-106
INRC	INRI	
	INRJ	
S2X2P	INRB	593-107
INRC	INRI	
	INRJ	
S2Y1D	INRB	593-108
INRC	INRI	
	INRJ	
S2Y1P	INRB	593-109
INRC	INRI	
	INRJ	
S2Y2P	INRB	593-110
INRC	INRI	
	INRJ	
S2Z1P	INRB	594- 1
INRC	INRI	
	INRJ	
S2Z2P	INRB	594- 2
INRC	INRI	
	INRJ	
S3A1	SCN	303- 1
S3A2	SCN	314- 10
S3A3	SCN	323- 44
S3A4	SCN	333- 2
S3A05	SCN	295- 71
S3A5	SCN	342- 2
S3A6	SCN	350- 20
S3A8	SCN	362- 81
S3A10	SCN	372- 88
S3AN6	♦WESB	323-106
S3AN12	♦WESB	324- 36
S3AN15	♦WESB	324- 82
S3AN20	♦WESB	324-103
S3AN31	♦WESB	325- 19
S3AN40	♦WESB	325- 37
S3AN55	♦WESB	325- 59
S3AN70	♦MAHA	319- 5
S3AN71	♦WESB	325- 71
S3AN125	HIN	319- 8
♦MAHA	♦WESB	
S3BN15	WESB	324- 83
S3BN20	WESB	324-104
S3BN31	WESB	325- 20
S3BN40	WESB	325- 38
S3BN55	WESB	325- 60
S3BN71	WESB	325- 72
S3BN200	WESB	326- 30
S3BR2	HIN	323- 53
S3BR8	HIN	324- 93
S3BR25	HIN	318-106
	♦MAHA	
S3BR30	♦MAHA	318-110
S3BR70	♦MAHA	319- 6
S3BR125	♦WESB	326- 7
S3BR501	♦WESB	326-110
S3BR502	WESB	326-108
S3CN1	♦WESB	318-103
S3CR25	♦MAHA	318-107
S3CR30	♦MAHA	319- 1
S3DR25	♦MAHA	318-108
S3DR30	♦MAHA	319- 2
S3EN270	HIN	326- 64
	♦WESB	
S3EN290	HIN	326- 77
	♦WESB	
S3EN300	HIN	326- 85
S3EN301	HIN	326- 68
S3EN310	♦WESB	326- 81
S3EN350	HIN	326- 87
	♦WESB	
S3ER25	♦MAHA	318-109
S3ER30	♦MAHA	319- 3
S3FN270	♦WESB	326- 65
S3FN290	♦WESB	326- 78
S3FN301	HIN	326- 69
S3FN310	♦WESB	326- 82
S3FN350	♦WESB	326- 88
S3GN55	WESB	325- 61
S3GN71	WESB	325- 73
S3GN270	♦WESB	326- 66
S3GN290	♦WESB	326- 79
S3GN301	HIN	326- 70
S3GN310	♦WESB	326- 83
S3GN350	♦WESB	326- 89
S3GR311	♦WESB	326-101
S3HN270	HIN	326- 67
	♦WESB	
S3HN290	HIN	326- 80
	♦WESB	
S3HN300	HIN	326- 86
S3HN301	HIN	326- 71

△-Registered with JEDEC by this manufacturer

♦-Copy of mfr's data sheet may be ordered from D.A.T.A.

1. TYPE No. CROSS INDEX

IN TYPE NUMBER SEQUENCE

TYPE No.	MFRS	Pg&Line
S3HN310	♦WESB	326- 84
S3HN350	HIN	326- 90
	♦WESB	
S3HR311	♦WESB	326-102
S3KN125	♦WESB	326- 8
S3LB	VAC	580- 54
S3LN125	♦WESB	326- 10
S3M1	♦WESB	312-101
S3M2	♦WESB	318-101
S3M3	♦WESB	323- 61
S3PN125	♦WESB	326- 6
S3V1D	INRB	594- 3
INRC	INRI	
	INRJ	
S3V2P	INRB	594- 4
INRC	INRI	
	INRJ	
S3V3P	INRB	594- 5
INRC	INRI	
	INRJ	
S3W2P	INRB	594- 6
INRC	INRI	
	INRJ	
S3W3P	INRB	594- 7
INRC	INRI	
	INRJ	
S3X2P	INRB	594- 8
INRC	INRI	
	INRJ	
S3X3P	INRB	594- 9
INRC	INRI	
	INRJ	
S3Y2P	INRB	594- 10
INRC	INRI	
	INRJ	
S3Y3P	INRB	594- 11
INRC	INRI	
	INRJ	
S3Z2P	INRB	594- 12
INRC	INRI	
	INRJ	
S3Z3P	INRB	594- 13
INRC	INRI	
	INRJ	
S04	SES	269- 39
S4AN6	♦WESB	333- 85
S4AN12	♦WESB	334- 40
S4AN15	♦WESB	334-108
S4AN20	♦WESB	335- 28
S4AN31	♦WESB	335- 79
S4AN40	♦WESB	336- 2
S4AN55	♦WESB	336- 34
S4AN70	♦MAHA	327- 18
S4AN71	♦WESB	336- 52
S4AN125	HIN	327- 21
♦MAHA	♦WESB	
S4BN15	WESB	334-109
S4BN20	WESB	335- 29
S4BN31	WESB	335- 80
S4BN40	WESB	336- 3
S4BN55	WESB	336- 35
S4BN71	WESB	336- 53
S4BN200	WESB	337- 31
S4BR2	HIN	333- 14
S4BR8	HIN	335- 13
S4BR25	HIN	327- 10
	♦MAHA	
S4BR30	♦MAHA	327- 14
S4BR70	♦MAHA	327- 19
S4BR125	♦WESB	337- 1
S4BR501	♦WESB	338- 25
S4BR502	WESB	338- 23
S4CN1	♦WESB	327- 7
S4CR25	♦MAHA	327- 11
S4CR30	♦MAHA	327- 15
S4DR25	♦MAHA	327- 12
S4DR30	♦MAHA	327- 16
S4EN270	HIN	337- 73
	♦WESB	
S4EN290	HIN	337- 91
	♦WESB	
S4EN300	HIN	337-103
S4EN301	HIN	337- 78
S4EN310	♦WESB	337- 99
S4EN350	HIN	337-106
	♦WESB	
S4ER25	♦MAHA	327- 13
S4ER30	♦MAHA	327- 17
S4FN270	♦WESB	337- 74
S4FN290	♦WESB	337- 92
S4FN301	HIN	337- 79
S4FN310	♦WESB	337-100
S4FN350	♦WESB	337-107
S4GN55	WESB	336- 36
S4GN71	WESB	336- 54
S4GN270	♦WESB	337- 75
S4GN290	♦WESB	337- 93
S4GN301	HIN	337- 80
S4GN310	♦WESB	337-101
S4GN350	♦WESB	337-108
S4GR311	♦WESB	338- 14
S4HN270	HIN	337- 76
	♦WESB	
S4HN290	HIN	337- 94
	♦WESB	
S4HN300	HIN	337-104
S4HN301	HIN	337- 81
S4HN310	♦WESB	337-102
S4HN350	HIN	337-109
	♦WESB	
S4HR311	♦WESB	338- 15
S4KN125	♦WESB	337- 2
S4LB	VAC	580- 55
S4LN125	♦WESB	337- 6

TYPE No.	MFRS	Pg&Line
S4M1	♦WESB	322- 58
S4M2	♦WESB	327- 6
S4M3	♦WESB	333- 28
S4PN125	♦WESB	336-110
S4V2P	INRB	594- 14
INRC	INRI	
	INRJ	
S4V4P	INRB	594- 15
INRC	INRI	
	INRJ	
S4W2P	INRB	594- 16
INRC	INRI	
	INRJ	
S4W4P	INRB	594- 17
INRC	INRI	
	INRJ	
S4X2P	INRB	594- 18
INRC	INRI	
	INRJ	
S4X4P	INRB	594- 19
INRC	INRI	
	INRJ	
S4Y2P	INRB	594- 20
INRC	INRI	
	INRJ	
S4Y4P	INRB	594- 21
INRC	INRI	
	INRJ	
S4Z2P	INRB	594- 22
INRC	INRI	
	INRJ	
S4Z4P	INRB	594- 23
INRC	INRI	
	INRJ	
S05-01	ORIJ	299- 70
S05-02	ORIJ	310- 33
S05-04	ORIJ	328-100
S05-06	ORIJ	346- 45
S05-08	ORIJ	359- 54
S05-10	ORIJ	369-108
S5A1	SCN	303- 46
S5A2	SCN	314- 60
S5A3	SCN	323- 83
S5A4	SCN	333- 52
S5A05	SCN	295-100
S5A5	SCN	342- 34
S5A6	SCN	350- 73
S5A8	SCN	363- 13
S5A10	SCN	373- 10
S5AN6	♦WESB	342- 51
S5AN12	♦WESB	342- 88
S5AN15	♦WESB	343- 25
S5AN20	♦WESB	343- 44
S5AN31	♦WESB	343- 66
S5AN40	♦WESB	343- 82
S5AN55	♦WESB	343- 97
S5AN70	♦MAHA	336- 66
S5AN71	♦WESB	343-110
S5AN125	HIN	337- 20
♦MAHA	♦WESB	
S5B10	SHEJ	303- 97
S5B20	SHEJ	315- 7
S5B30	SHEJ	324- 16
S5B40	SHEJ	334- 6
S5B50	SHEJ	342- 74
S5B60	SHEJ	351- 21
S5B80	SHEJ	363- 67
S5B100	SHEJ	373- 54
S5BN15	WESB	343- 26
S5BN20	WESB	343- 45
S5BN31	WESB	343- 67
S5BN40	WESB	343- 83
S5BN55	WESB	343- 98
S5BN71	WESB	344- 1
S5BN200	WESB	344- 67
S5BR2	HIN	342- 10
S5BR8	HIN	343- 34
S5BR25	HIN	336- 4
	♦MAHA	
S5BR30	♦MAHA	336- 12
S5BR70	♦MAHA	336- 67
S5BR125	♦WESB	344- 46
S5BR501	♦WESB	345- 42
S5BR502	WESB	345- 41
S5CN1	♦WESB	331- 86
S5CR25	♦MAHA	336- 5
S5CR30	♦MAHA	336- 13
S5DR25	♦MAHA	336- 6
S5DR30	♦MAHA	336- 14
S5EN270	HIN	344-101
	♦WESB	
S5EN290	HIN	345- 4
	♦WESB	
S5EN300	HIN	345- 14
S5EN301	HIN	344-105
S5EN310	♦WESB	345- 10
S5EN350	HIN	345- 16
	♦WESB	
S5ER25	♦MAHA	336- 7
S5ER30	♦MAHA	336- 15
S5FN270	♦WESB	344-102
S5FN290	♦WESB	345- 5
S5FN301	HIN	344-106
S5FN310	♦WESB	345- 11
S5FN350	♦WESB	345- 17
S5GN55	WESB	343- 99
S5GN71	WESB	344- 2
S5GN270	♦WESB	344-103
S5GN290	♦WESB	345- 6
S5GN301	HIN	344-107
S5GN310	♦WESB	345- 12
S5GN350	♦WESB	345- 18
S5GR311	♦WESB	345- 32

TYPE No.	MFRS	Pg&Line
S5HN270	HIN	344-104
	♦WESB	
S5HN290	HIN	345- 7
	♦WESB	
S5HN300	HIN	345- 15
S5HN301	HIN	344-108
S5HN310	♦WESB	345- 13
S5HN350	HIN	345- 19
	♦WESB	
S5HR311	♦WESB	345- 33
S5KN125	♦WESB	344- 47
S5LB	VAC	580- 56
S5LN125	♦WESB	344- 49
S5M1	♦WESB	331- 87
S5M2	♦WESB	329- 32
S5M3	♦WESB	342- 17
S5PN125	♦WESB	344- 45
S5V2P	INRB	594- 24
INRC	INRI	
	INRJ	
S5V5P	INRB	594- 25
INRC	INRI	
	INRJ	
S5W2P	INRB	594- 26
INRC	INRI	
	INRJ	
S5W5P	INRB	594- 27
INRC	INRI	
	INRJ	
S5X2P	INRB	594- 28
INRC	INRI	
	INRJ	
S5X5P	INRB	594- 29
INRC	INRI	
	INRJ	
S5Y2P	INRB	594- 30
INRC	INRI	
	INRJ	
S5Y5P	INRB	594- 31
INRC	INRI	
	INRJ	
S5Z2P	INRB	594- 32
INRC	INRI	
	INRJ	
S5Z5P	INRB	594- 33
INRC	INRI	
	INRJ	
S6-103K	AEIL	303- 73
S6-203K	AEIL	314- 93
S6-403K	AEIL	333- 86
S6-603K	AEIL	350-101
S6-803K	AEIL	363- 34
S6-1003K	AEIL	373- 28
S6-1203K	AEIL	379- 28
S6AN6	♦WESB	350-102
S6AN12	♦WESB	351- 53
S6AN15	♦WESB	351-109
S6AN20	♦WESB	352- 27
S6AN31	♦WESB	352- 68
S6AN40	♦WESB	352- 97
S6AN55	♦WESB	353- 6
S6AN70	♦MAHA	338- 83
S6AN71	♦WESB	353- 23
S6AN125	HIN	338- 86
♦MAHA	♦WESB	
S6BN15	WESB	351-110
S6BN20	WESB	352- 28
S6BN31	WESB	352- 69
S6BN40	WESB	352- 98
S6BN55	WESB	353- 7
S6BN71	WESB	353- 24
S6BN200	WESB	353- 97
S6BR2	HIN	350- 32
S6BR8	HIN	352- 10
S6BR25	HIN	338- 74
	♦MAHA	
S6BR30	♦MAHA	338- 78
S6BR70	♦MAHA	338- 84
S6BR125	♦WESB	353- 74
S6BR502	♦WESB	354- 82
S6CN1	♦WESB	341- 24
S6CR25	♦MAHA	338- 75
S6CR30	♦MAHA	338- 79
S6DR25	♦MAHA	338- 76
S6DR30	♦MAHA	338- 80
S6EN270	HIN	354- 23
	♦WESB	
S6EN290	HIN	354- 40
	♦WESB	
S6EN300	HIN	354- 50
S6EN301	HIN	354- 28
S6EN310	♦WESB	354- 46
S6EN350	HIN	354- 52
	♦WESB	
S6ER25	♦MAHA	338- 77
S6ER30	♦MAHA	338- 81
S6FN270	♦WESB	354- 24
S6FN290	♦WESB	354- 41
S6FN301	HIN	354- 29
S6FN310	♦WESB	354- 47
S6FN350	♦WESB	354- 53
S6GN55	WESB	353- 8
S6GN71	WESB	353- 25
S6GN270	♦WESB	354- 25
S6GN290	♦WESB	354- 42
S6GN301	HIN	354- 30
S6GN310	♦WESB	354- 48
S6GN350	♦WESB	354- 54
S6GR311	♦WESB	354- 69
S6HN270	HIN	354- 26
	♦WESB	
S6HN290	HIN	354- 43
	♦WESB	
S6HN300	HIN	354- 51

TYPE No.	MFRS	Pg&Line
S6HN301	HIN	354- 31
S6HN310	♦WESB	354- 49
S6HN350	HIN	354- 55
	♦WESB	
S6HR311	♦WESB	354- 70
S6KN125	♦WESB	353- 75
S6LN125	♦WESB	353- 79
S6M1	♦WESB	341- 25
S6M2	♦WESB	339- 78
S6M3	♦WESB	350- 47
S6PN125	♦WESB	353- 73
S6V2P	INRB	594- 34
INRC	INRI	
	INRJ	
S6V6P	INRB	594- 35
INRC	INRI	
	INRJ	
S6W2P	INRB	594- 36
INRC	INRI	
	INRJ	
S6W6P	INRB	594- 37
INRC	INRI	
	INRJ	
S6X2P	INRB	594- 38
INRC	INRI	
	INRJ	
S6X6P	INRB	594- 39
INRC	INRI	
	INRJ	
S6Y2P	INRB	594- 40
INRC	INRI	
	INRJ	
S6Y6P	INRB	594- 41
INRC	INRI	
	INRJ	
S6Z2P	INRB	594- 42
INRC	INRI	
	INRJ	
S6Z6P	INRB	594- 43
INRC	INRI	
	INRJ	
S7	SAKJ	330- 98
S7AN6	WESB	356- 83
S7AN12	WESB	357- 1
S7AN15	♦WESB	357- 30
S7AN20	♦WESB	357- 38
S7AN31	♦WESB	357- 48
S7AN40	♦WESB	357- 58
S7AN55	♦WESB	357- 68
S7AN70	♦MAHA	345- 66
S7AN71	♦WESB	357- 75
S7AN125	HIN	345- 68
♦MAHA	♦WESB	
S7BN15	WESB	357- 31
S7BN20	WESB	357- 39
S7BN31	WESB	357- 49
S7BN40	WESB	357- 59
S7BN55	WESB	357- 69
S7BN71	WESB	357- 76
S7BN200	WESB	358- 7
S7BR2	HIN	356- 67
S7BR8	HIN	357- 36
S7BR25	HIN	345- 58
	♦MAHA	
S7BR30	♦MAHA	345- 62
S7BR70	♦MAHA	345- 67
S7BR125	♦WESB	357-101
S7BR502	♦WESB	358- 69
S7CR25	♦MAHA	345- 59
S7CR30	♦MAHA	345- 63
S7DR25	♦MAHA	345- 60
S7DR30	♦MAHA	345- 64
S7EN270	HIN	358- 27
	♦WESB	
S7EN290	HIN	358- 36
	♦WESB	
S7EN300	HIN	358- 47
S7EN301	HIN	358- 31
S7EN310	♦WESB	358- 43
S7EN350	HIN	358- 50
	♦WESB	
S7ER25	♦MAHA	345- 61
S7ER30	♦MAHA	345- 65
S7FN270	♦WESB	358- 28
S7FN290	♦WESB	358- 37
S7FN301	HIN	358- 32
S7FN310	♦WESB	358- 44
S7FN350	♦WESB	358- 51
S7GN55	WESB	357- 70
S7GN71	WESB	357- 77
S7GN270	♦WESB	358- 29
S7GN290	♦WESB	358- 38
S7GN301	HIN	358- 33
S7GN310	♦WESB	358- 45
S7GN350	♦WESB	358- 52
S7GR311	♦WESB	358- 62
S7HN270	HIN	358- 30
	♦WESB	
S7HN290	HIN	358- 39
	♦WESB	
S7HN300	HIN	358- 48
S7HN301	HIN	358- 34
S7HN310	♦WESB	358- 46
S7HN350	HIN	358- 53
	♦WESB	
S7HR311	♦WESB	358- 63
S7KN125	♦WESB	357-102
S7LB	VAC	580- 57
S7LN125	♦WESB	357-103
S7PN125	♦WESB	357-100
S7V2P	INRB	594- 44
INRC	INRI	
	INRJ	

TYPE No.	MFRS	Pg&Line
S7W2P	INRB	594- 45
INRC	INRI	
	INRJ	
S7X2P	INRB	594- 46
INRC	INRI	
	INRJ	
S7Y2P	INRB	594- 47
INRC	INRI	
	INRJ	
S7Z2P	INRB	594- 48
INRC	INRI	
	INRJ	
S8-01	ORIJ	303- 2
S8-01F	ORIJ	303- 98
S8-02	ORIJ	314- 11
S8-02F	ORIJ	315- 8
S8-03	ORIJ	323- 45
S8-03F	ORIJ	324- 17
S8-04	ORIJ	333- 3
S8-04F	ORIJ	334- 7
S8-06	ORIJ	350- 21
S8-06F	ORIJ	351- 22
S8-08	ORIJ	362- 82
S8-08F	ORIJ	363- 68
S8-10	ORIJ	372- 89
S8-10F	ORIJ	373- 55
S8AN6	♦WESB	363- 35
S8AN12	♦WESB	363- 90
S8AN15	♦WESB	364- 35
S8AN20	♦WESB	364- 54
S8AN31	♦WESB	364- 77
S8AN40	♦WESB	364-105
S8AN55	♦WESB	365- 22
S8AN70	♦MAHA	354- 95
S8AN71	♦WESB	365- 37
S8AN125	HIN	354- 97
♦MAHA	♦WESB	
S8B10	SHEJ	304- 90
S8B20	SHEJ	316- 16
S8B30	SHEJ	324- 98
S8B40	SHEJ	335- 19
S8B50	SHEJ	343- 39
S8B60	SHEJ	352- 19
S8B80	SHEJ	364- 50
S8B100	SHEJ	374- 21
S8BN15	WESB	364- 36
S8BN20	WESB	364- 55
S8BN31	WESB	364- 78
S8BN40	WESB	364-106
S8BN55	WESB	365- 23
S8BN71	WESB	365- 38
S8BN200	WESB	365-105
S8BR2	HIN	362- 88
S8BR8	HIN	364- 43
S8BR25	HIN	354- 87
	♦MAHA	
S8BR30	♦MAHA	354- 91
S8BR70	♦MAHA	354- 96
S8BR125	♦WESB	365- 83
S8BR502	♦WESB	366- 79
S8BR503	WESB	376- 17
S8CN1	♦WESB	354-103
S8CR25	♦MAHA	354- 88
S8CR30	♦MAHA	354- 92
S8DR25	♦MAHA	354- 89
S8DR30	♦MAHA	354- 93
S8EN270	HIN	366- 25
	♦WESB	
S8EN290	HIN	366- 39
	♦WESB	
S8EN300	HIN	366- 50
S8EN301	HIN	366- 30
S8EN310	♦WESB	366- 46
S8EN350	HIN	366- 53
	♦WESB	
S8ER25	♦MAHA	354- 90
S8ER30	♦MAHA	354- 94
S8FN270	♦WESB	366- 26
S8FN290	♦WESB	366- 40
S8FN301	HIN	366- 31
S8FN310	♦WESB	366- 47
S8FN350	♦WESB	366- 54
S8GN55	WESB	365- 24
S8GN71	WESB	365- 39
S8GN270	♦WESB	366- 27
S8GN290	♦WESB	366- 41
S8GN301	HIN	366- 32
S8GN310	♦WESB	366- 48
S8GN350	♦WESB	366- 55
S8GR311	♦WESB	366- 67
S8HN270	HIN	366- 28
	♦WESB	
S8HN290	HIN	366- 42
	♦WESB	
S8HN300	HIN	366- 51
S8HN301	HIN	366- 33
S8HN310	♦WESB	366- 49
S8HN350	HIN	366- 56
	♦WESB	
S8HR311	♦WESB	366- 68
S8KN125	♦WESB	365- 84
S8LB	VAC	580- 58
S8LN125	♦WESB	365- 88
S8M1	♦WESB	348-110
S8M2	♦WESB	354-101
S8M3	♦WESB	356- 70
S8PN125	♦WESB	365- 82
S9AN6	WESB	367- 58
S9AN12	WESB	367- 81
S9AN15	♦WESB	367-100
S9AN20	♦WESB	367-105
S9AN31	♦WESB	367-109
S9AN40	♦WESB	368- 4
S9AN55	♦WESB	368- 9

Δ-Registered with JEDEC by this manufacturer

♦-Copy of mfr's data sheet may be ordered from D.A.T.A.

1. TYPE No. CROSS INDEX

IN TYPE NUMBER SEQUENCE

TYPE No	MFRS	Pg&Line
S9AN70	♦MAHA	358- 88
S9AN71	♦WESB	368- 14
S9AN125	HIN	358- 91
♦MAHA	♦WESB	
S9BN15	WESB	367-101
S9BN20	WESB	367-106
S9BN31	WESB	367-110
S9BN40	WESB	368- 5
S9BN55	WESB	368- 10
S9BN71	WESB	368- 15
S9BN200	WESB	368- 47
S9BR2	HIN	367- 43
S9BR8	HIN	367-104
S9BR25	HIN	358- 79
	♦MAHA	
S9BR30	♦MAHA	358- 83
S9BR70	♦MAHA	358- 89
S9BR125	♦WESB	368- 34
S9BR502	♦WESB	368-104
S9BR503	WESB	377- 40
S9CR25	♦MAHA	358- 80
S9CR30	♦MAHA	358- 84
S9DR25	♦MAHA	358- 81
S9DR30	♦MAHA	358- 85
S9EN270	HIN	368- 62
	♦WESB	
S9EN290	HIN	368- 71
	♦WESB	
S9EN300	HIN	368- 81
S9EN301	HIN	368- 66
S9EN310	♦WESB	368- 77
S9EN350	HIN	368- 83
	♦WESB	
S9ER25	♦MAHA	358- 82
S9ER30	♦MAHA	358- 86
S9FN270	♦WESB	368- 63
S9FN290	♦WESB	368- 72
S9FN301	HIN	368- 67
S9FN310	♦WESB	368- 78
S9FN350	♦WESB	368- 84
S9GN55	WESB	368- 11
S9GN71	WESB	368- 16
S9GN270	♦WESB	368- 64
S9GN290	♦WESB	368- 73
S9GN301	HIN	368- 68
S9GN310	♦WESB	368- 79
S9GN350	♦WESB	368- 85
S9GR311	♦WESB	368- 93
S9HN270	HIN	368- 65
	♦WESB	
S9HN290	HIN	368- 74
	♦WESB	
S9HN300	HIN	368- 82
S9HN301	HIN	368- 69
S9HN310	♦WESB	368- 80
S9HN350	HIN	368- 86
	♦WESB	
S9HR311	♦WESB	368- 94
S9K1003K3	AEIL	368-103
S9K1003K35	AEIL	368-102
S9K1003K4	AEIL	368-101
S9K1003K45	AEIL	368-100
S9K1003K5	AEIL	368- 99
S9K1103K3	AEIL	376- 20
S9K1103K35	AEIL	376- 19
S9K1103K4	AEIL	376- 16
S9K1103K45	AEIL	376- 15
S9K1103K5	AEIL	376- 13
S9K1203K3	AEIL	377- 43
S9K1203K35	AEIL	377- 42
S9K1203K4	AEIL	377- 39
S9K1203K45	AEIL	377- 38
S9K1203K5	AEIL	377- 36
S9K1303K3	AEIL	381- 20
S9K1303K35	AEIL	381- 19
S9K1303K4	AEIL	381- 16
S9K1303K45	AEIL	381- 15
S9K1303K5	AEIL	381- 13
S9K1403K3	AEIL	382- 1
S9K1403K35	AEIL	381-110
S9K1403K4	AEIL	381-108
S9K1403K45	AEIL	381-107
S9K1403K5	AEIL	381-106
S9K1503K3	AEIL	383- 91
S9K1503K35	AEIL	383- 90
S9K1503K4	AEIL	383- 86
S9K1503K45	AEIL	383- 85
S9K1503K5	AEIL	383- 84
S9K1603K3	AEIL	385- 88
S9K1603K35	AEIL	385- 87
S9K1603K4	AEIL	385- 85
S9K1603K45	AEIL	385- 84
S9K1603K5	AEIL	385- 83
S9K1703K3	AEIL	387- 66
S9K1703K35	AEIL	387- 65
S9K1703K4	AEIL	387- 60
S9K1703K45	AEIL	387- 59
S9K1703K5	AEIL	387- 58
S9K1803K3	AEIL	387-107
S9K1803K35	AEIL	387-106
S9K1803K4	AEIL	387-104
S9K1803K45	AEIL	387-103
S9K1803K5	AEIL	387-102
S9K1903K35	AEIL	388-109
S9K1903K4	AEIL	388-104
S9K1903K45	AEIL	388-103
S9K1903K5	AEIL	388-102
S9K2003K35	AEIL	389- 19
S9K2003K4	AEIL	389- 17
S9K2003K45	AEIL	389- 16
S9K2003K5	AEIL	389- 15
S9K2103K4	AEIL	390- 97
S9K2103K45	AEIL	390- 96
S9K2103K5	AEIL	390- 95

TYPE No.	MFRS	Pg&Line
S9K2203K4	AEIL	391- 11
S9K2203K45	AEIL	391- 10
S9K2203K5	AEIL	391- 9
S9K2303K4	AEIL	391- 44
S9K2303K45	AEIL	391- 43
S9K2303K5	AEIL	391- 42
S9K2403A4	AEIL	383- 72
S9K2403K45	AEIL	391- 59
S9K2403K5	AEIL	391- 58
S9K2503K45	AEIL	392- 7
S9K2503K5	AEIL	392- 6
S9K2603K5	AEIL	392- 87
S9K2703K5	AEIL	393- 2
S9K2803K5	AEIL	393- 10
S9K2903K5	AEIL	393- 48
S9K3003K5	AEIL	393- 57
S9KN125	♦WESB	368- 35
S9LN125	♦WESB	368- 36
S9PN125	♦WESB	368- 33
S010G	SCN	288- 20
S10⊘	SCN	299- 77
S10A	SCN	299- 61
S10AN6	♦WESB	373- 29
S10AN12	♦WESB	373- 72
S10AN15	♦WESB	374- 8
S10AN20	♦WESB	374- 26
S10AN31	♦WESB	374- 45
S10AN40	♦WESB	374- 64
S10AN55	♦WESB	374- 78
S10AN70	♦MAHA	365- 47
S10AN71	♦WESB	374- 90
S10AN125	HIN	365- 97
♦MAHA	♦WESB	
S10BN15	WESB	374- 9
S10BN20	WESB	374- 27
S10BN31	WESB	374- 46
S10BN40	WESB	374- 65
S10BN55	WESB	374- 79
S10BN71	WESB	374- 91
S10BN200	WESB	375- 40
S10BR2	HIN	372- 95
S10BR8	HIN	374- 15
S10BR25	HIN	364-107
	♦MAHA	
S10BR30	♦MAHA	365- 5
S10BR70	♦MAHA	365- 48
S10BR125	♦WESB	375- 21
S10BR502	♦WESB	376- 21
S10BR503	WESB	381- 17
S10CN1	♦WESB	361- 76
S10CR25	♦MAHA	364-108
S10CR30	♦MAHA	365- 6
S10DR25	♦MAHA	364-109
S10DR30	♦MAHA	365- 7
S10EN270	HIN	375- 66
	♦WESB	
S10EN290	HIN	375- 81
	♦WESB	
S10EN300	HIN	375- 91
S10EN301	HIN	375- 72
S10EN310	♦WESB	375- 87
S10EN350	HIN	375- 94
	♦WESB	
S10ER25	♦MAHA	364-110
S10ER30	♦MAHA	365- 8
S10FN270	♦WESB	375- 67
S10FN290	♦WESB	375- 82
S10FN301	HIN	375- 73
S10FN310	♦WESB	375- 88
S10FN350	♦WESB	375- 95
S10GN55	WESB	374- 80
S10GN71	WESB	374- 92
S10GN270	♦WESB	375- 68
S10GN290	♦WESB	375- 83
S10GN301	HIN	375- 74
S10GN310	♦WESB	375- 89
S10GN350	♦WESB	375- 96
S10GR311	♦WESB	375-110
S10HN270	HIN	375- 69
	♦WESB	
S10HN290	HIN	375- 84
	♦WESB	
S10HN300	HIN	375- 92
S10HN301	HIN	375- 75
S10HN310	♦WESB	375- 90
S10HN350	HIN	375- 97
	♦WESB	
S10HR311	♦WESB	376- 1
S10KN125	♦WESB	375- 25
S10LB	VAC	580- 59
S10LN125	♦WESB	375- 26
S10M1	♦WESB	361- 77
S10M2	♦WESB	359- 83
S10M3	♦WESB	362-103
S10N500E3	AEIL	344- 35
S10N500E4	AEIL	344- 36
S10N500E5	AEIL	344- 37
S10N600E3	AEIL	353- 60
S10N600E4	AEIL	353- 61
S10N600E5	AEIL	353- 62
S10N700E3	AEIL	357- 93
S10N700E4	AEIL	357- 94
S10N700E5	AEIL	357- 95
S10N800E3	AEIL	365- 69
S10N800E4	AEIL	365- 70
S10N800E5	AEIL	365- 71
S10N900E3	AEIL	368- 27
S10N900E4	AEIL	368- 28
S10N900E5	AEIL	368- 29
S10N1000E3	AEIL	375- 8
S10N1000E4	AEIL	375- 9
S10N1000E5	AEIL	375- 10
S10N1100E3	AEIL	376- 89
S10N1100E4	AEIL	376- 90

TYPE No.	MFRS	Pg&Line
S10N1100E5	AEIL	376- 91
S10N1200E3	AEIL	380- 17
S10N1200E4	AEIL	380- 18
S10N1200E5	AEIL	380- 19
S10N1300E3	AEIL	381- 59
S10N1300E4	AEIL	381- 60
S10N1300E5	AEIL	381- 61
S10N1400E3	AEIL	382- 92
S10N1400E4	AEIL	382- 93
S10N1400E5	AEIL	382- 94
S10N1500E3	AEIL	385- 26
S10N1500E4	AEIL	385- 27
S10N1500E5	AEIL	385- 28
S10N1600E3	AEIL	386- 93
S10N1600E4	AEIL	386- 94
S10N1600E5	AEIL	386- 95
S10PN125	♦WESB	375- 20
S11AN15	♦WESB	376- 65
S11AN20	♦WESB	376- 67
S11AN31	♦WESB	376- 71
S11AN40	♦WESB	376- 77
S11AN55	♦WESB	376- 80
S11AN71	♦WESB	376- 83
S11AN125	♦WESB	376- 96
S11BN15	WESB	376- 66
S11BN20	WESB	376- 68
S11BN31	WESB	376- 72
S11BN40	WESB	376- 78
S11BN55	WESB	376- 81
S11BN71	WESB	376- 84
S11BN200	WESB	376-104
S11BR2	HIN	376- 53
S11BR125	♦WESB	376- 95
S11BR502	♦WESB	377- 44
S11BR503	WESB	381-109
S11EN270	HIN	376-110
	♦WESB	
S11EN290	HIN	377- 9
	♦WESB	
S11EN300	HIN	377- 20
S11EN301	HIN	377- 5
S11EN310	♦WESB	377- 16
S11EN350	HIN	377- 23
	♦WESB	
S11FN270	♦WESB	377- 1
S11FN290	♦WESB	377- 10
S11FN301	HIN	377- 6
S11FN310	♦WESB	377- 17
S11FN350	♦WESB	377- 24
S11GN55	WESB	376- 82
S11GN71	WESB	376- 85
S11GN270	♦WESB	377- 2
S11GN290	♦WESB	377- 11
S11GN301	HIN	377- 7
S11GN310	♦WESB	377- 18
S11GN350	♦WESB	377- 25
S11GR311	♦WESB	380-108
S11HN270	HIN	375- 70
	♦WESB	
S11HN290	HIN	377- 12
	♦WESB	
S11HN300	HIN	377- 21
S11HN301	HIN	377- 8
S11HN310	♦WESB	377- 19
S11HN350	HIN	377- 26
	♦WESB	
S11HR311	♦WESB	377- 31
S11KN125	♦WESB	376- 97
S11LB	VAC	580- 60
S11LN125	♦WESB	376- 98
S11P500E	AEIL	344- 41
S11P600E	AEIL	353- 67
S11P700E	AEIL	357- 98
S11P800E	AEIL	365- 76
S11P900E	AEIL	368- 31
S11P1000E	AEIL	375- 14
S11P1100E	AEIL	376- 92
S11P1200E	AEIL	380- 22
S11P1300E	AEIL	381- 62
S11P1400E	AEIL	382- 96
S11P1500E	AEIL	385- 29
S11P1600E	AEIL	386- 98
S11PN125	♦WESB	376- 94
S12△	SCN	377- 65
S12⊘	♦SET	311-110
S12AN6	♦WESB	379- 29
S12AN12	♦WESB	379- 47
S12AN15	♦WESB	379- 59
S12AN20	♦WESB	379- 66
S12AN31	♦WESB	379- 75
S12AN40	♦WESB	379- 87
S12AN55	♦WESB	379-101
S12AN70	♦MAHA	369- 12
S12AN71	♦WESB	379-109
S12AN125	HIN	369- 15
♦MAHA	♦WESB	
S12BN15	WESB	379- 60
S12BN20	WESB	379- 67
S12BN31	WESB	379- 76
S12BN40	WESB	379- 88
S12BN55	WESB	379-102
S12BN71	WESB	379-110
S12BN200	WESB	380- 43
S12BR2	HIN	379- 1
S12BR8	HIN	379- 62
S12BR25	HIN	369- 5
	♦MAHA	
S12BR30	♦MAHA	369- 9
S12BR70	♦MAHA	369- 13
S12BR125	♦WESB	380- 27
S12BR502	♦WESB	381- 21
S12BR503	WESB	385- 86
S12C20	SHEJ	316- 95
S12C40	SHEJ	335-105

TYPE No.	MFRS	Pg&Line
S12C60	SHEJ	352- 91
S12C80	SHEJ	364-100
S12C100	SHEJ	374- 59
S12CN1	♦WESB	371-105
S12CR25	♦MAHA	369- 6
S12CR30	♦MAHA	369- 10
S12DR25	♦MAHA	369- 7
S12DR30	♦MAHA	368-108
S12EN270	HIN	380- 64
	♦WESB	
S12EN290	HIN	380- 80
	♦WESB	
S12EN300	HIN	380- 91
S12EN301	HIN	380- 69
S12EN310	♦WESB	380- 87
S12EN350	HIN	380- 94
	♦WESB	
S12ER25	♦MAHA	369- 8
S12ER30	♦MAHA	368-109
S12FN270	♦WESB	380- 65
S12FN290	♦WESB	380- 81
S12FN301	HIN	380- 70
S12FN310	♦WESB	380- 88
S12FN350	♦WESB	380- 95
S12GN55	WESB	379-103
S12GN71	WESB	380- 1
S12GN270	♦WESB	380- 66
S12GN290	♦WESB	380- 82
S12GN301	HIN	380- 71
S12GN310	♦WESB	380- 89
S12GN350	♦WESB	380- 96
S12GR311	♦WESB	381-103
S12HN270	HIN	380- 67
	♦WESB	
S12HN290	HIN	380- 83
	♦WESB	
S12HN300	HIN	380- 92
S12HN301	HIN	380- 72
S12HN310	♦WESB	380- 90
S12HN350	HIN	380- 97
	♦WESB	
S12HR311	♦WESB	380-109
S12KN125	♦WESB	380- 29
S12LN125	♦WESB	380- 30
S12M1	♦WESB	371-106
S12M2	♦WESB	370- 24
S12M3	♦WESB	367- 45
S12P500E	AEIL	344- 33
S12P600E	AEIL	353- 59
S12P700E	AEIL	357- 92
S12P800E	AEIL	365- 68
S12P900E	AEIL	368- 26
S12P1000E	AEIL	375- 7
S12P1100E	AEIL	376- 88
S12P1200E	AEIL	380- 16
S12P1300E	AEIL	381- 58
S12P1400E	AEIL	382- 91
S12P1500E	AEIL	385- 25
S12P1600E	AEIL	386- 92
S12PN125	♦WESB	380- 26
S13	SCN	328- 12
S13AN15	WESB	381- 51
S13AN20	WESB	386- 72
S13AN31	WESB	386- 77
S13AN40	WESB	386- 83
S13AN125	♦WESB	381- 66
S13BN15	WESB	386- 70
S13BN20	WESB	386- 73
S13BN31	WESB	381- 52
S13BN40	WESB	381- 53
S13BN55	WESB	381- 54
S13BN71	WESB	381- 56
S13BN200	WESB	381- 71
S13BR2	HIN	381- 42
S13BR125	♦WESB	381- 65
S13BR503	♦WESB	387- 61
S13EN270	HIN	381- 73
	♦WESB	
S13EN290	HIN	381- 83
	♦WESB	
S13EN300	HIN	381- 95
S13EN301	HIN	381- 75
S13EN310	♦WESB	381- 89
S13EN350	HIN	381- 99
	♦WESB	
S13FN270	♦WESB	377- 3
S13FN290	♦WESB	381- 84
S13FN301	HIN	381- 76
S13FN310	♦WESB	381- 90
S13FN350	♦WESB	381-100
S13GN55	WESB	381- 55
S13GN71	WESB	381- 57
S13GN270	♦WESB	377- 4
S13GN290	♦WESB	381- 85
S13GN301	HIN	381- 77
S13GN310	♦WESB	381- 91
S13GN350	♦WESB	381-101
S13GR312	♦WESB	381- 93
S13GR313	♦WESB	381- 97
S13HN270	HIN	381- 74
	♦WESB	
S13HN290	HIN	381- 86
	♦WESB	
S13HN300	HIN	381- 96
S13HN301	HIN	381- 78
S13HN310	♦WESB	381- 92
S13HN350	HIN	381-102
	♦WESB	
S13HR312	♦WESB	381- 94
S13HR313	♦WESB	381- 98
S13KN125	♦WESB	381- 67
S13LB	VAC	580- 61
S13LN125	♦WESB	381- 68
S13N500E	AEIL	344- 63

TYPE No.	MFRS	Pg&Line
S13N600E	AEIL	353- 91
S13N700E	AEIL	358- 4
S13N800E	AEIL	365-101
S13N900E	AEIL	368- 44
S13N1000E	AEIL	375- 37
S13N1100E	AEIL	376-102
S13N1200E	AEIL	380- 40
S13N1300E	AEIL	381- 69
S13N1400E	AEIL	383- 6
S13N1500E	AEIL	385- 36
S13N1600E	AEIL	386-107
S13PN125	♦WESB	381- 64
S14△	SCN	292- 69
S14⊘	♦SET	330- 90
S14AN15	WESB	382- 57
S14AN20	WESB	387- 82
S14AN31	WESB	387- 84
S14AN40	WESB	387- 85
S14AN125	♦WESB	382-102
S14BN15	WESB	387- 79
S14BN20	WESB	387- 83
S14BN31	WESB	382- 62
S14BN40	WESB	382- 72
S14BN55	WESB	382- 77
S14BN71	WESB	382- 83
S14BN200	WESB	383- 9
S14BR2	HIN	382- 40
S14BR125	♦WESB	382-101
S14BR503	♦WESB	387-105
S14EN270	HIN	383- 21
	♦WESB	
S14EN290	HIN	383- 39
	♦WESB	
S14EN300	HIN	383- 53
S14EN301	HIN	383- 25
S14EN310	♦WESB	383- 46
S14EN350	HIN	383- 58
	♦WESB	
S14FN270	♦WESB	383- 22
S14FN290	♦WESB	383- 40
S14FN301	HIN	383- 26
S14FN310	♦WESB	383- 47
S14FN350	♦WESB	383- 59
S14GN55	WESB	382- 78
S14GN71	WESB	382- 84
S14GN270	♦WESB	383- 23
S14GN290	♦WESB	383- 41
S14GN301	HIN	383- 27
S14GN310	♦WESB	383- 48
S14GN350	♦WESB	383- 60
S14GR312	♦WESB	383- 50
S14GR313	♦WESB	383- 56
S14HN270	HIN	383- 24
	♦WESB	
S14HN290	HIN	383- 42
	♦WESB	
S14HN300	HIN	383- 54
S14HN301	HIN	383- 28
S14HN310	♦WESB	383- 49
S14HN350	HIN	383- 61
	♦WESB	
S14HR312	♦WESB	383- 51
S14HR313	♦WESB	383- 57
S14KN125	♦WESB	382-103
S14LB	VAC	580- 62
S14LN125	♦WESB	382-104
S14PN125	♦WESB	382-100
S15	SAKJ	340- 32
S15⊘	SCN	339- 44
S15AN6	♦WESB	385- 5
S15AN12	♦WESB	385- 10
S15AN15	WESB	385- 14
S15AN20	WESB	388- 58
S15AN31	WESB	388- 62
S15AN40	WESB	388- 65
S15AN125	HIN	380- 37
♦MAHA	♦WESB	
S15AR504	WESB	385- 80
S15BN15	WESB	388- 57
S15BN20	WESB	388- 59
S15BN31	WESB	385- 17
S15BN40	WESB	385- 18
S15BN55	WESB	385- 19
S15BN71	WESB	385- 21
S15BN200	WESB	385- 38
S15BR2	HIN	384-101
S15BR8	HIN	385- 15
S15BR25	HIN	379- 89
	♦MAHA	
S15BR30	♦MAHA	379- 93
S15BR125	♦WESB	385- 33
S15BR503	♦WESB	388-105
S15CN1	♦WESB	378- 74
S15CR25	♦MAHA	379- 90
S15CR30	♦MAHA	379- 94
S15DR25	♦MAHA	379- 91
S15DR30	♦MAHA	379- 95
S15EN270	HIN	385- 43
	♦WESB	
S15EN290	HIN	385- 55
	♦WESB	
S15EN300	HIN	385- 67
S15EN301	HIN	385- 47
S15EN310	♦WESB	385- 61
S15EN350	HIN	385- 72
	♦WESB	
S15ER25	♦MAHA	379- 92
S15ER30	♦MAHA	379- 96
S15FN270	♦WESB	385- 44
S15FN290	♦WESB	385- 56
S15FN301	HIN	385- 48
S15FN310	♦WESB	385- 62
S15FN350	♦WESB	385- 73
S15GN71	♦WESB	385- 22

△-Registered with JEDEC by this manufacturer

♦-Copy of mfr's data sheet may be ordered from D.A.T.A.

1. TYPE No. CROSS INDEX

IN TYPE NUMBER SEQUENCE

TYPE No.	MFRS	Pg&Line
S15GN270	♦ WESB	385 - 45
S15GN290	♦ WESB	385 - 57
S15GN301	HIN	385 - 49
S15GN310	♦ WESB	385 - 63
S15GN350	♦ WESB	385 - 74
S15GR312	♦ WESB	385 - 65
S15GR313	♦ WESB	385 - 70
S15HN270	HIN	385 - 46
	♦ WESB	
S15HN290	HIN	385 - 58
	♦ WESB	
S15HN300	HIN	385 - 68
S15HN301	HIN	385 - 50
S15HN310	♦ WESB	385 - 64
S15HN350	HIN	385 - 75
	♦ WESB	
S15HR312	♦ WESB	385 - 66
S15HR313	♦ WESB	385 - 71
S15KN125	♦ WESB	385 - 34
S15LN125	♦ WESB	385 - 35
S15M1	♦ WESB	378 - 75
S15M3	WESB	372 -107
S15PN125	♦ WESB	385 - 32
S16△	SCN	328 - 89
S16⧄	♦ SET	348 - 9
S16A	SCN	328 - 90
S16AR504	WESB	387 - 54
S16B10	SHEJ	305 -102
S16B20	SHEJ	317 - 46
S16B30	SHEJ	325 - 84
S16B40	SHEJ	336 - 69
S16B50	SHEJ	344 - 12
S16B60	SHEJ	353 - 37
S16B80	SHEJ	365 - 50
S16B100	SHEJ	374 -100
S16B	SCN	329 - 33
S16BR503	♦ WESB	389 - 18
S16EN270	♦ WESB	387 - 8
S16EN290	♦ WESB	387 - 24
S16EN301	HIN	387 - 12
S16EN310	♦ WESB	387 - 30
S16EN350	HIN	387 - 39
	♦ WESB	
S16FN270	♦ WESB	387 - 9
S16FN290	♦ WESB	387 - 25
S16FN301	HIN	387 - 13
S16FN310	♦ WESB	387 - 31
S16FN350	HIN	387 - 40
	♦ WESB	
S16GN270	♦ WESB	387 - 10
S16GN290	♦ WESB	387 - 26
S16GN301	HIN	387 - 14
S16GN310	♦ WESB	387 - 32
S16GN350	♦ WESB	387 - 41
S16GR312	♦ WESB	387 - 34
S16GR313	♦ WESB	387 - 37
S16HN270	♦ WESB	387 - 11
S16HN290	♦ WESB	387 - 27
S16HN301	HIN	387 - 15
S16HN310	♦ WESB	387 - 33
S16HN350	♦ WESB	387 - 42
S16HR312	♦ WESB	387 - 35
S16HR313	♦ WESB	387 - 38
S17	SCN	310 - 21
S17A	SCN	310 - 22
S17AR504	WESB	387 -101
S17BR503	♦ WESB	390 - 98
S17EN301	HIN	381 - 79
S17EN350	HIN	387 - 94
S17FN301	HIN	381 - 80
S17FN350	HIN	387 - 95
S17GN301	HIN	381 - 81
S17GR312	♦ WESB	387 - 89
S17GR313	♦ WESB	387 - 92
S17HN301	HIN	381 - 82
S17HR312	♦ WESB	387 - 90
S17HR313	♦ WESB	387 - 93
S17LB	VAC	580 - 63
S18	SCN	339 - 57
S18A	SCN	339 - 45
S18AR504	WESB	388 - 98
S18B	SCN	339 - 79
S18BR503	♦ WESB	391 - 12
S18EN301	HIN	383 - 29
S18EN350	HIN	388 - 86
S18FN301	HIN	383 - 30
S18FN350	HIN	388 - 87
S18GN301	HIN	383 - 31
S18GR312	♦ WESB	388 - 81
S18GR313	♦ WESB	388 - 84
S18HN301	HIN	383 - 32
S18HR312	♦ WESB	388 - 82
S18HR313	♦ WESB	388 - 85
S19	SCN	328 - 49
S19A	SCN	339 - 14
S19AR504	♦ WESB	389 - 14
S19AR505	WESB	389 - 13
S19EN301	HIN	385 - 51
S19FN301	HIN	385 - 52
S19GN301	HIN	385 - 53
S19GR312	♦ WESB	389 - 8
S19GR313	♦ WESB	389 - 10
S19HN301	HIN	385 - 54
S19HR312	♦ WESB	389 - 9
S19HR313	♦ WESB	389 - 11
S020G	SCN	288 -107
S20⧄	SCN	359 - 47
S20-01	ORIJ	303 - 47
S20-01F	ORIJ	304 - 93
S20-02	ORIJ	314 - 61
S20-02F	ORIJ	316 - 17
S20-04	ORIJ	333 - 53
S20-04F	ORIJ	335 - 20
S20-06	ORIJ	350 - 74

TYPE No.	MFRS	Pg&Line
S20-06F	ORIJ	352 - 20
S20-08	ORIJ	363 - 14
S20-08F	ORIJ	364 - 51
S20-10	ORIJ	373 - 11
S20-10F	ORIJ	374 - 22
S20AR504	♦ WESB	390 - 89
S20AR505	WESB	390 - 88
S20EN301	HIN	387 - 16
S20FN301	HIN	387 - 17
S20GN301	HIN	387 - 18
S20GR312	♦ WESB	390 - 72
S20GR313	♦ WESB	390 - 76
S20HN301	HIN	387 - 19
S20HR312	♦ WESB	390 - 73
S20HR313	♦ WESB	390 - 77
S20N400H	AEIL	327 - 20
S20N500JA	AEIL	337 - 72
S20N600JA	AEIL	338 - 88
S20N700JA	AEIL	345 - 69
S20N800JA	AEIL	354 - 98
S20N900JA	AEIL	358 - 93
S20N1000JA	AEIL	366 - 24
S20N1100JA	AEIL	366 -100
S20N1200JA	AEIL	369 - 17
S20N1300JA	AEIL	375 - 65
S20N1400JA	AEIL	376 -109
S20N1500JA	AEIL	380 - 62
S20N1600JA	AEIL	380 - 63
S20P500JA	AEIL	344 - 64
S20P600JA	AEIL	353 - 95
S20P700JA	AEIL	358 - 5
S20P800JA	AEIL	365 -102
S20P900JA	AEIL	368 - 45
S20P1000JA	AEIL	375 - 38
S20P1100JA	AEIL	376 -103
S20P1200JA	AEIL	380 - 41
S20P1300JA	AEIL	381 - 70
S20P1400JA	AEIL	383 - 7
S20P1500JA	AEIL	385 - 37
S20P1600JA	AEIL	386 -108
S21△	SCN	292 - 55
S21AR504	♦ WESB	391 - 8
S21AR505	WESB	391 - 7
S21GR312	♦ WESB	390 -110
S21GR313	♦ WESB	391 - 2
S21HR312	♦ WESB	391 - 1
S21HR313	♦ WESB	391 - 3
S21N100H	AEIL	306 - 74
S21N200H	AEIL	318 - 25
S21N300H	AEIL	326 - 59
S21N400H	AEIL	337 - 67
S21N500H	AEIL	344 - 96
S21N600H	AEIL	354 - 18
S21N700H	AEIL	358 - 23
S21N800H	AEIL	366 - 20
S22△	SCN	293 - 25
S22A	SCN	292 -109
S22AR504	♦ WESB	391 - 40
S22AR505	WESB	391 - 39
S22GR312	♦ WESB	391 - 32
S22GR313	♦ WESB	391 - 34
S22HR312	♦ WESB	391 - 33
S22HR313	♦ WESB	391 - 35
S23△	SCN	346 - 33
S23A	SCN	346 - 34
S23AR505	♦ WESB	391 - 57
S23GR312	♦ WESB	391 - 50
S23HR312	♦ WESB	391 - 51
S24△	SCN	369 -100
S24AR505	♦ WESB	392 - 4
S24GR314	♦ WESB	391 -106
S24HR314	♦ WESB	391 -107
S25A05	SEN	297 - 12
S25A10	SEN	305 - 6
S25A20	SEN	316 - 43
S25A30	SEN	325 - 4
S25A40	SEN	335 - 47
S25A50	SEN	343 - 53
S25A60	SEN	352 - 41
S25A80	SEN	364 - 64
S25A100	SEN	374 - 34
S25AR505	♦ WESB	392 - 84
S25GR314	♦ WESB	392 - 78
S25HR314	♦ WESB	392 - 79
S26	SCN	321 - 52
S26AR505	♦ WESB	392 -110
S26GR314	♦ WESB	392 -106
S26HR314	♦ WESB	392 -107
S27	SCN	377 - 69
S27AR506	WESB	393 - 9
S27GR314	♦ WESB	393 - 7
S27HR314	♦ WESB	393 - 8
S28	SCN	359 - 27
S28AR506	WESB	393 - 46
S28GR314	♦ WESB	393 - 42
S28HR314	♦ WESB	393 - 43
S29AR506	WESB	393 - 56
S29GR314	♦ WESB	393 - 54
S29HR314	♦ WESB	393 - 55
S030G	SCN	289 - 30
S30⧄	SCN	346 - 35
S30AR506	WESB	394 -104
S30GR314	♦ WESB	394 - 95
S30HR314	♦ WESB	394 - 96
S30N500JA3	AEIL	337 - 96
S30N500JA4	AEIL	337 - 97
S30N600JA3	AEIL	345 - 8
S30N600JA4	AEIL	345 - 9
S30N700JA3	AEIL	354 - 44
S30N700JA4	AEIL	354 - 45
S30N800JA3	AEIL	358 - 41
S30N800JA4	AEIL	358 - 42
S30N900JA3	AEIL	366 - 43
S30N900JA4	AEIL	366 - 44

TYPE No.	MFRS	Pg&Line
S30N1000JA3	AEIL	368 - 75
S30N1000JA4	AEIL	368 - 76
S30N1100JA3	AEIL	375 - 85
S30N1100JA4	AEIL	375 - 86
S30N1200JA3	AEIL	377 - 14
S30N1200JA4	AEIL	377 - 15
S30N1300JA3	AEIL	380 - 84
S30N1300JA4	AEIL	380 - 85
S30N1400JA3	AEIL	381 - 87
S30N1400JA4	AEIL	381 - 88
S30N1500JA3	AEIL	383 - 44
S30N1500JA4	AEIL	383 - 45
S30N1600JA3	AEIL	385 - 59
S30N1600JA4	AEIL	385 - 60
S30N1700JA4	AEIL	387 - 28
S30N1800JA4	AEIL	387 - 88
S30N1900JA4	AEIL	388 - 79
S30N2000JA4	AEIL	389 - 7
S31	SCN	320 - 80
S31AR506	WESB	395 - 5
S32△	SCN	292 - 47
S32AR506	WESB	395 - 27
S33△	SCN	292 - 70
S33AR506	WESB	395 - 30
S34△	SCN	292 - 53
S34AR506	WESB	395 - 44
S35⧄	SCN	313 - 42
S35AR506	WESB	395 - 90
S36△	SCN	345 -110
S36AR506	WESB	396 - 20
S37	SCN	295 - 16
S37AR507	WESB	396 - 22
S38	SCN	295 - 40
S38AR507	WESB	396 - 38
S39	SCN	298 - 45
S39AR507	WESB	396 - 40
S040G	SCN	289 - 54
S40⧄	SCN	293 - 26
S40A	SCN	293 - 27
S40AR507	WESB	397 - 73
S41AR507	WESB	397 - 75
S42AR507	WESB	397 - 93
S43	SCN	292 - 20
S43AR507	WESB	397 - 95
S44	SCN	298 - 87
S46	SCN	307 - 59
S47	SCN	292 - 66
S48	SCN	293 - 11
S49	SCN	292 - 75
S050G	SCN	289 - 79
S50△	SCN	354 -104
S50LB	VAC	580 - 64
S51△	SCN	303 - 11
S52△	SCN	314 - 20
S53△	SCN	323 - 52
S54△	SCN	333 - 13
S55⧄	SCN	342 - 9
S55LB	VAC	580 - 65
S56	SCN	350 - 31
S56LB	VAC	580 - 66
S57	SCN	356 - 66
S58	SCN	362 - 87
S59	SCN	367 - 42
S060G	SCN	290 - 2
S60⧄	SCN	372 - 94
S61	SCN	370 - 68
S62	SCN	369 -101
S63	SCN	359 - 48
S070G	SCN	290 - 22
S72	SCN	292 - 45
S73	SCN	292 - 54
S76	SCN	293 - 64
S77	SCN	293 - 49
S78	SCN	292 - 71
S79	SCN	292 - 40
S080G	SCN	290 - 50
S81	SCN	300 - 47
S82	SCN	311 - 30
S83	SCN	321 - 53
S84	SCN	330 - 6
S85	SCN	340 - 24
S86	SCN	347 - 36
S91△	SCN	298 -109
S91⧄	GICC	299 - 17
S91A	SCN	300 - 12
S91B	SCN	302 - 18
S91H	GICC	299 - 26
S92△	GICC	309 - 87
S92⧄	SCN	309 - 68
S92A	SCN	310 - 96
S92H	GICC	309 - 97
S93△	SCN	320 - 31
S93⧄	GICC	320 - 48
S93A	SCN	321 - 21
S93H	GICC	320 - 55
S94	GICC	328 - 42
S95	SCN	339 - 69
S100⧄	SCN	329 - 16
S100EB	VAC	580 - 67
S100LB	VAC	580 - 68
S101	SCN	310 - 52
S102	SCN	328 - 73
S103	SCN	328 - 41
S104	SCN	328 - 70
S105	SCN	329 - 17
S106	SCN	328 - 59
S107	SCN	339 - 11
S108	SCN	329 - 18
S150LB	VAC	580 - 69
S200△	SCN	292 - 81
S200-02F	ORIJ	317 - 70
S200-03F	ORIJ	325 -108
S200-04F	ORIJ	336 - 97
S200-06F	ORIJ	353 - 58

TYPE No.	MFRS	Pg&Line
S200-08F	ORIJ	365 - 67
S200-10F	ORIJ	375 - 6
S201	SCN	298 - 99
S202	SCN	309 - 61
S203	SCN	320 - 28
S204	SCN	328 - 18
S205	SCN	338 -100
S206△	♦ SEN	500 -104
S206⧄	SCN	345 - 79
S206S	♦ SEN	500 -105
S208	SCN	358 -109
S210△	♦ SEN	501 - 24
S210⧄	SCN	369 - 38
S210S	♦ SEN	501 - 25
S215	♦ SEN	501 - 58
S215S	♦ SEN	501 - 59
S217	SCN	309 - 94
S218	SCN	345 - 80
S219	SCN	328 - 50
S220	SCN	293 - 39
S221	SCN	299 - 86
S222	SCN	310 - 53
S223	SCN	320 - 99
S224	SRPJ	580 - 70
S224△	SCN	329 - 19
S225	♦ SEN	501 - 88
S225S	♦ SEN	501 - 89
S229	SCN	312 - 61
S230	SCN	338 - 95
S231	SCN	322 - 51
S232	SCN	338 - 36
S233	SCN	369 - 86
S234	SCN	359 - 20
S235	SCN	328 - 91
S236	SCN	312 - 88
S238	SCN	328 - 10
S239	SCN	345 - 73
S240	SCN	298 - 47
S241	SCN	292 - 29
S243	SCN	329 - 34
S250	SCN	293 - 40
S251	SCN	299 - 87
S252	SCN	310 - 54
S253	SCN	320 -100
S254	SCN	329 - 20
S255	SCN	339 - 68
S256	SCN	346 - 62
S257	SCN	355 - 31
S258	SCN	359 - 74
S260	SCN	370 - 16
S262	APX	247 - 6
S298	ITT	276 - 45
S300	SCN	323 - 46
S0301J	♦ ECC	416 - 98
S0301K	♦ ECC	416 - 63
S0301M	♦ ECC	416 - 99
S0303L	♦ ECC	417 - 4
S0303M	♦ ECC	417 - 5
S0306B	♦ ECC	417 - 14
S0306G	♦ ECC	417 - 15
S0306H	♦ ECC	417 - 16
S0306L	♦ ECC	417 - 17
S0308B	♦ ECC	417 - 39
S0308G	♦ ECC	417 - 40
S0308H	♦ ECC	417 - 41
S0308L	♦ ECC	417 - 42
S0310B	♦ ECC	417 - 47
S0310G	♦ ECC	417 - 48
S0310H	♦ ECC	417 - 49
S0310L	♦ ECC	417 - 50
S0316B	♦ ECC	417 - 56
S0316G	♦ ECC	417 - 57
S0316H	♦ ECC	417 - 58
S0316L	♦ ECC	417 - 59
S0325	♦ ECC	417 - 65
S0325C	♦ ECC	417 - 66
S0325D	♦ ECC	417 - 67
S0325G	♦ ECC	417 - 68
S0325H	♦ ECC	417 - 69
S0335	♦ ECC	417 - 75
S0335C	♦ ECC	417 - 76
S0335D	♦ ECC	417 - 77
S0335G	♦ ECC	417 - 78
S0335H	♦ ECC	417 - 79
S398	ITT	273 - 74
S400△	ITT	276 - 38
S400⧄	SCN	333 - 4
S401	ITT	271 - 83
S402	ITT	276 - 43
S403	ITT	271 - 91
S406	♦ SEN	503 -101
S406S	♦ SEN	503 -102
S410△	♦ SEN	504 - 21
S410⧄	SCN	303 - 22
S410S	♦ SEN	504 - 22
S411	SES	314 - 31
S413	SES	333 - 24
S415△	♦ SEN	504 - 55
S415⧄	SCN	350 - 42
S415S	♦ SEN	504 - 56
S417	SES	362 - 98
S420	SES	304 - 7
S421	SES	315 - 32
S423	SES	334 - 31
S425△	♦ SEN	504 - 85
S425⧄	SCN	351 - 45
S425S	♦ SEN	504 - 86
S427	SES	363 - 86
S500△	ITT	276 - 39
S500⧄	SCN	342 - 3
S500-2	ORIJ	317 - 13
S500-3	ORIJ	325 - 58
S500-4	ORIJ	336 - 33
S500-5	ORIJ	343 - 96

TYPE No.	MFRS	Pg&Line
S500-6	ORIJ	353 - 5
S500-7	ORIJ	357 - 67
S500-8	ORIJ	365 - 21
S500-10	ORIJ	374 - 77
S0501J	♦ ECC	418 - 12
S0501K	♦ ECC	417 -104
S0501M	♦ ECC	418 - 13
S501	ITT	273 - 63
S502	ITT	269 - 50
S0503L	♦ ECC	418 - 41
S0503M	♦ ECC	418 - 42
S504	ITT	276 - 40
S505	ITT	273 - 64
S0506B	♦ ECC	418 - 60
S0506G	♦ ECC	418 - 61
S0506H	♦ ECC	418 - 62
S0506L	♦ ECC	418 - 63
S506	ITT	269 - 51
S507	ITT	276 - 41
S0508B	♦ ECC	419 - 6
S0508G	♦ ECC	419 - 7
S0508H	♦ ECC	419 - 8
S0508L	♦ ECC	419 - 9
S508	ITT	273 - 65
S509	ITT	269 - 52
S0510B	♦ ECC	419 - 26
S0510E4	INRB	580 - 71
INRC	INRI	
	INRJ	
S0510E5	INRB	580 - 72
INRC	INRI	
	INRJ	
S0510E6	INRB	580 - 73
INRC	INRI	
	INRJ	
S0510E7	INRB	580 - 74
INRC	INRI	
	INRJ	
S0510E8	INRB	580 - 75
INRC	INRI	
	INRJ	
S0510E9	INRB	580 - 76
INRC	INRI	
	INRJ	
S0510E10	INRB	580 - 77
INRC	INRI	
	INRJ	
S0510E11	INRB	580 - 78
INRC	INRI	
	INRJ	
S0510G	♦ ECC	419 - 27
S0510H	♦ ECC	419 - 28
S0510L	♦ ECC	419 - 29
S0516B	♦ ECC	419 - 77
S0516G	♦ ECC	419 - 78
S0516H	♦ ECC	419 - 79
S0516L	♦ ECC	419 - 80
S0520E4	INRB	580 - 79
INRC	INRI	
	INRJ	
S0520E5	INRB	580 - 80
INRC	INRI	
	INRJ	
S0520E6	INRB	580 - 81
INRC	INRI	
	INRJ	
S0520E7	INRB	580 - 82
INRC	INRI	
	INRJ	
S0520E8	INRB	580 - 83
INRC	INRI	
	INRJ	
S0520E9	INRB	580 - 84
INRC	INRI	
	INRJ	
S0520E10	INRB	580 - 85
INRC	INRI	
	INRJ	
S0520E11	INRB	580 - 86
INRC	INRI	
	INRJ	
S0525	♦ ECC	419 - 97
S0525C	♦ ECC	419 - 98
S0525D	♦ ECC	419 - 99
S0525G	♦ ECC	419 -100
S0525H	♦ ECC	419 -101
S0535	♦ ECC	420 - 29
S0535C	♦ ECC	459 - 36
S0535D	♦ ECC	459 - 37
S0535G	♦ ECC	420 - 30
S0535H	♦ ECC	420 - 31
S575A	♦ SCN	408 - 83
S600	SCN	350 - 22
S673	♦ SCN	408 - 84
S800	SCN	362 - 83
S872A	♦ SCN	406 - 43
S1000	SCN	372 - 90
S1001J	♦ ECC	424 - 2
S1001K	♦ ECC	423 - 65
S1001M	♦ ECC	424 - 3
S1003L	♦ ECC	424 - 45
S1003M	♦ ECC	424 - 46
S1006B	♦ ECC	424 - 70
S1006G	♦ ECC	424 - 71
S1006H	♦ ECC	424 - 72
S1006L	♦ ECC	424 - 73
S1008B	♦ ECC	425 - 26
S1008G	♦ ECC	425 - 27
S1008H	♦ ECC	425 - 28
S1008L	♦ ECC	425 - 29
S1010	SYN	300 - 85
S1010B	♦ ECC	425 - 56
S1010G	♦ ECC	425 - 57
S1010H	♦ ECC	425 - 58

△-Registered with JEDEC by this manufacturer

♦-Copy of mfr's data sheet may be ordered from D.A.T.A.

1. TYPE No. CROSS INDEX

IN TYPE NUMBER SEQUENCE

TYPE No.	MFRS	Pg&Line
S1010L	♦ECC	425-59
S1016B	♦ECC	426-30
S1016G	♦ECC	426-31
S1016H	♦ECC	426-32
S1016L	♦ECC	426-33
S1020	SYN	311-69
S1020E4	INRB	580-87
INRC	INRI	
	INRJ	
S1020E5	INRB	580-88
INRC	INRI	
	INRJ	
S1020E6	INRB	580-89
INRC	INRI	
	INRJ	
S1020E7	INRB	580-90
INRC	INRI	
	INRJ	
S1020E8	INRB	580-91
INRC	INRI	
	INRJ	
S1020E9	INRB	580-92
INRC	INRI	
	INRJ	
S1020E10	INRB	580-93
INRC	INRI	
	INRJ	
S1020E11	INRB	580-94
INRC	INRI	
	INRJ	
S1025	♦ECC	426-79
S1025C	♦ECC	426-80
S1025D	♦ECC	426-81
S1025G	♦ECC	426-82
S1025H	♦ECC	426-83
S1030	SYN	321-84
S1035	♦ECC	427-36
S1035C	♦ECC	427-37
S1035D	♦ECC	427-38
S1035G	♦ECC	427-39
S1035H	♦ECC	427-40
S1040	SYN	330-51
S1050	SYN	340-55
S1060	SYN	347-82
S1070	SYN	355-75
S1080	SYN	360-67
S1090	SYN	367-9
S1210	SYN	302-20
S1220	SYN	313-21
S1230	SYN	322-82
S1240	SYN	332-8
S1250	SYN	341-45
S1260	SYN	349-28
S1270	SYN	356-22
S1280	SYN	361-97
S1290	SYN	367-23
S2001J	♦ECC	432-105
S2001K	♦ECC	432-62
S2001M	♦ECC	432-106
S2003L	♦ECC	433-46
S2003M	♦ECC	433-47
S2006B	♦ECC	433-81
S2006G	♦ECC	433-82
S2006H	♦ECC	433-83
S2006L	♦ECC	433-84
S2008B	♦ECC	434-42
S2008G	♦ECC	434-43
S2008H	♦ECC	434-44
S2008L	♦ECC	434-45
S2010B	♦ECC	434-74
S2010G	♦ECC	434-75
S2010H	♦ECC	434-76
S2010L	♦ECC	434-77
S2016B	♦ECC	435-62
S2016G	♦ECC	435-63
S2016H	♦ECC	435-64
S2016L	♦ECC	435-65
S2025	♦ECC	436-5
S2025C	♦ECC	436-6
S2025D	♦ECC	436-7
S2025G	♦ECC	436-8
S2025H	♦ECC	436-9
S2035	♦ECC	436-78
S2035C	♦ECC	436-79
S2035D	♦ECC	436-80
S2035G	♦ECC	436-81
S2035H	♦ECC	436-82
S2105	SYN	297-4
S2110	SYN	304-109
S2115	SYN	308-35
S2125	SYN	319-54
S2130	SYN	324-110
S2135	SYN	327-65
S2145	SYN	338-50
S2150	SYN	343-52
S2170	SYN	357-43
S2900E5M	INRB	580-95
INRC	INRI	
	INRJ	
S2900E7M	INRB	580-96
INRC	INRI	
	INRJ	
S2900E9 5M	INRB	580-97
INRC	INRI	
	INRJ	
S3006C	TOSJ	514-72
S3006D	TOSJ	514-73
S3006E	TOSJ	514-74
S3014	TOSJ	520-25
S3015A	TOSJ	597-28
S3015B	TOSJ	597-29
S3019	TOSJ	596-20
S3020	TOSJ	596-21
S3028	TOSJ	531-8

TYPE No.	MFRS	Pg&Line
S3405	SYN	297-59
S3410	SYN	305-70
S3415	SYN	308-60
S3425	SYN	319-64
S3430	SYN	325-54
S3435	SYN	327-75
S3445	SYN	338-57
S3450	SYN	343-92
S3470	SYN	357-64
S4001J	♦ECC	449-15
S4001K	♦ECC	448-96
S4001M	♦ECC	449-16
S4003L	♦ECC	449-53
S4003M	♦ECC	449-54
S4006B	♦ECC	449-84
S4006G	♦ECC	449-85
S4006H	♦ECC	449-86
S4006L	♦ECC	449-87
S4008B	♦ECC	450-38
S4008G	♦ECC	450-39
S4008H	♦ECC	450-40
S4008L	♦ECC	450-41
S4010B	♦ECC	450-71
S4010G	♦ECC	450-72
S4010H	♦ECC	450-73
S4010L	♦ECC	450-74
S4016B	♦ECC	451-59
S4016G	♦ECC	451-60
S4016H	♦ECC	451-61
S4016L	♦ECC	451-62
S4025	♦ECC	451-108
S4025C	♦ECC	451-109
S4025D	♦ECC	451-110
S4025G	♦ECC	452-1
S4025H	♦ECC	452-2
S4035	♦ECC	452-72
S4035C	♦ECC	452-73
S4035D	♦ECC	452-74
S4035G	♦ECC	452-75
S4035H	♦ECC	452-76
S4205	SYN	297-86
S4210	SYN	306-13
S4215	SYN	308-85
S4220	SYN	317-69
S4225	SYN	319-83
S4230	SYN	325-107
S4235	SYN	327-91
S4245	SYN	338-62
S4250	SYN	344-32
S4270	SYN	357-91
S5105	SYN	297-91
S5110	SYN	306-31
S5115	SYN	308-92
S5120	SYN	317-90
S5125	SYN	319-87
S5130⊘	SYN	326-16
S5135	SYN	327-93
S5140	SYN	337-14
S5145	SYN	338-63
S5150	SYN	344-54
S5160	SYN	353-84
S5162	SAR	393-29
S5170	SYN	357-108
S5180	SYN	365-92
S5226,A,B	PWC	167-34
S5227,A,B	PWC	167-181
S5228,A,B	PWC	168-137
S5229,A,B	PWC	169-133
S5230,A,B	PWC	170-136
S5231,A,B	PWC	171-179
S5232,A,B	PWC	173-46
S5233,A,B	PWC	174-6
S5234,A,B	PWC	175-20
S5235,A,B	PWC	177-117
S5236,A,B	PWC	179-165
S5237,A,B	PWC	182-32
S5238,A,B	PWC	184-54
S5239,A,B	PWC	185-144
S5240,A,B	PWC	188-32
S5241,A,B	PWC	190-38
S5242,A,B	PWC	192-103
S5243,A,B	PWC	194-164
S5244,A,B	PWC	196-66
S5245,A,B	PWC	197-121
S5246,A,B	PWC	199-115
S5247,A,B	PWC	201-19
S5248,A,B	PWC	202-28
S5249,A,B	PWC	203-156
S5250,A,B	PWC	204-168
S5251,A,B	PWC	206-141
S5252,A,B	PWC	208-131
S5253,A,B	PWC	210-28
S5254,A,B	PWC	211-24
S5255,A,B	PWC	212-115
S5256,A,B	PWC	213-34
S5257,A,B	PWC	214-180
S5258,A,B	PWC	216-119
S5259,A,B	PWC	218-16
S5260,A,B	PWC	219-97
S5261,A,B	PWC	221-31
S5262,A,B	PWC	222-170
S5263,A,B	PWC	224-64
S5264,A,B	PWC	225-117
S5265,A,B	PWC	226-20
S5266,A,B	PWC	227-73
S5267,A,B	PWC	228-171
S5268,A,B	PWC	230-70
S5269,A,B	PWC	231-93
S5270,A,B	PWC	232-13
S5271,A,B	PWC	233-48
S5272,A,B	PWC	235-21
S5273,A,B	PWC	236-44
S5274,A,B	PWC	237-84
S5275,A,B	PWC	238-97

TYPE No.	MFRS	Pg&Line
S5276,A,B	PWC	239-57
S5277,A,B	PWC	240-89
S5278,A,B	PWC	241-57
S5279,A,B	PWC	242-25
S5280,A,B	PWC	242-180
S5281,A,B	PWC	243-67
S5305	SYN	298-7
S5310	SYN	306-68
S5315	SYN	309-6
S5325	SYN	319-99
S5330	SYN	326-53
S5335	SYN	327-103
S5343	SAR	402-50
S5344	SAR	406-41
S5345	SYN	338-65
S5347	SAR	385-106
S5350	SYN	344-90
S5367	SAR	409-79
S5370	SYN	358-17
S5373	SAR	406-42
S5449	SAR	408-80
S5978A,9A	SAR	296-97
S5978B,9B	SAR	304-82
S5978D,9D	SAR	316-5
S5978E,9E	SAR	324-92
S5978F,9F	SAR	335-12
S5978G,9G	SAR	343-33
S5978H,9H	SAR	352-9
S6001J	♦ECC	462-96
S6001K	♦ECC	462-87
S6001M	♦ECC	462-97
S6003L	♦ECC	463-4
S6003M	♦ECC	463-5
S6006B	♦ECC	463-33
S6006G	♦ECC	463-34
S6006H	♦ECC	463-35
S6006L	♦ECC	463-36
S6008B	♦ECC	463-74
S6008G	♦ECC	463-75
S6008H	♦ECC	463-76
S6008L	♦ECC	463-77
S6010B	♦ECC	463-104
S6010G	♦ECC	463-105
S6010H	♦ECC	463-106
S6010L	♦ECC	463-107
S6016B	♦ECC	464-72
S6016G	♦ECC	464-73
S6016H	♦ECC	464-74
S6016L	♦ECC	464-75
S6025	♦ECC	465-13
S6025C	♦ECC	465-14
S6025D	♦ECC	465-15
S6025G	♦ECC	465-16
S6025H	♦ECC	465-17
S6035	♦ECC	465-84
S6035C	♦ECC	465-85
S6035D	♦ECC	465-86
S6035G	♦ECC	465-87
S6035H	♦ECC	465-88
S8001J	♦ECC	473-97
S8001M	♦ECC	473-98
S8003L	♦ECC	474-3
S8003M	♦ECC	474-4
S8006B	♦ECC	474-19
S8006G	♦ECC	474-20
S8006H	♦ECC	474-21
S8006L	♦ECC	474-22
S8008	♦SCN	406-44
S8008B	♦ECC	474-42
S8008G	♦ECC	474-43
S8008H	♦ECC	474-44
S8008L	♦ECC	474-45
S8010B	♦ECC	474-46
S8010G	♦ECC	474-47
S8010H	♦ECC	474-48
S8010L	♦ECC	474-49
S8016B	♦ECC	474-85
S8016G	♦ECC	474-86
S8016H	♦ECC	474-87
S8016L	♦ECC	474-88
S8025	♦ECC	474-109
S8025C	♦ECC	474-110
S8025D	♦ECC	475-1
S8025G	♦ECC	475-2
S8025H	♦ECC	475-3
S8035	♦ECC	475-46
S8035C	♦ECC	475-47
S8035D	♦ECC	475-48
S8035G	♦ECC	475-49
S8035H	♦ECC	475-50
S8201	TOSJ	596-22
S10100	SYN	370-108
S10110	SYN	376-37
S10120	SYN	378-27
S12100	SYN	372-14
S12110	SYN	376-44
S12120	SYN	378-84
S12130	SYN	381-37
S12140	SYN	382-29
S12150	SYN	384-96
SA1AN12	WESB	304-14
SA1M1	♦WESB	301-91
SA2	SAKJ	331-102
SA2A	SAKJ	349-16
SA2AN12	WESB	315-39
SA2B	SAKJ	361-89
SA2C	SAKJ	372-5
SA2M1	♦WESB	312-89
SA2Z	SAKJ	313-6
SA3AN12	WESB	324-33
SA3M1	♦WESB	322-52
SA4AN12	WESB	334-38
SA4M1	♦WESB	331-75
SA5AN12	WESB	342-84

TYPE No.	MFRS	Pg&Line
SA5M1	♦WESB	341-19
SA6AN12	WESB	351-48
SA6M1	♦WESB	348-100
SA8AN12	WESB	363-88
SA8M1	♦WESB	361-66
SA10AN12	WESB	373-69
SA10M1	♦WESB	371-94
SA12AN12	WESB	379-45
SA12M1	♦WESB	378-72
SA821	♦SLCB	174-34
SA821A	♦SLCB	174-35
SA823	♦SLCB	174-36
SA823A	♦SLCB	174-37
SA825	♦SLCB	174-38
SA825A	♦SLCB	174-39
SA827	♦SLCB	174-40
SA827A	♦SLCB	174-41
SA829	♦SLCB	174-42
SA829A	♦SLCB	174-43
SAR5-08BPL	INRB	576-39
INRC	INRI	
	INRJ	
SAR5-10BPL	INRB	576-40
INRC	INRI	
	INRJ	
SAR6-08BPL	INRB	576-41
INRC	INRI	
	INRJ	
SAR6-10BPL	INRB	576-42
INRC	INRI	
	INRJ	
SAR8-08BPL	INRB	576-43
INRC	INRI	
	INRJ	
SAR8-10BPL	INRB	576-44
INRC	INRI	
	INRJ	
SAR9-08BPL	INRB	576-45
INRC	INRI	
	INRJ	
SAR9-10BPL	INRB	576-46
INRC	INRI	
	INRJ	
SAR10-08BPL	INRB	576-47
INRC	INRI	
	INRJ	
SB2	SAKJ	341-36
SB2B	SAKJ	360-108
SB2C	SAKJ	371-34
SB101K	AEIL	305-78
SB201K	AEIL	317-18
SB401K	AEIL	336-38
SB601K	AEIL	353-10
SB801K	AEIL	365-26
SB821	♦SLCB	174-44
SB821A	♦SLCB	174-45
SB823	♦SLCB	174-46
SB823A	♦SLCB	174-47
SB825	♦SLCB	174-48
SB825A	♦SLCB	174-49
SB827	♦SLCB	174-50
SB827A	♦SLCB	174-51
SB829	♦SLCB	174-52
SB829A	♦SLCB	174-53
SB1001K	AEIL	374-81
SB1201K	AEIL	379-104
SB1401K	AEIL	382-79
SBC102	SRPJ	576-48
SBC111	SRPJ	576-49
SBC255	SRPJ	576-50
SBC510	SRPJ	576-51
SBC530	SRPJ	576-52
SBC540	SRPJ	576-53
SBC541	SRPJ	576-54
SBC2020	SRPJ	576-55
SBT101K	AEIL	305-79
SBT201K	AEIL	317-19
SBT401K	AEIL	336-39
SBT601K	AEIL	353-11
SBT801K	AEIL	365-27
SBT1001K	AEIL	374-82
SBT1201K	AEIL	379-105
SBT1401K	AEIL	382-80
SC1△	TEC	541-46
SC1#	SET	301-5
SC2△	TEC	552-1
SC2#	SET	312-1
SC3	TEC	555-75
SC4	SET	330-91
SC05	SET	294-26
SC05E	SET	293-85
SC5	TEC	558-108
SC6	SET	348-10
SC7	TEC	561-7
SC8	SET	360-101
SC10	SET	371-30
SC11	TEC	562-54
SC15	SET	384-36
SC15△	TEC	562-71
SC20	SET	389-85
SC25	SET	392-43
SC30	SET	394-25
SC35A	♦GESY	499-84
	PIR	
SC35B	♦GESY	500-77
	PIR	
SC35D	♦GESY	503-74
	PIR	
SC35F	♦GESY	499-41
	PIR	
SC36A	♦GESY	499-85
	PIR	
SC36B	♦GESY	500-78
	PIR	

TYPE No.	MFRS	Pg&Line
SC36D	♦GESY	503-75
	PIR	
SC36F	♦GESY	499-42
SC40⊘	SET	396-87
SC40A	GESY	499-90
	PIR	
SC40B2	♦GESY	500-106
SC40B12	♦GESY	500-107
SC40B13	♦GESY	500-108
SC40B14	♦GESY	500-109
SC40B22	♦GESY	500-110
SC40B23	♦GESY	501-1
SC40B24	♦GESY	501-2
SC40B	♦GESY	501-3
	PIR	
SC40D2	♦GESY	503-103
SC40D12	♦GESY	503-104
SC40D13	♦GESY	503-105
SC40D14	♦GESY	503-106
SC40D22	♦GESY	503-107
SC40D23	♦GESY	503-108
SC40D24	♦GESY	503-109
SC40D	♦GESY	503-110
	PIR	
SC40E2	♦GESY	505-110
SC40E12	♦GESY	506-1
SC40E13	♦GESY	506-2
SC40E14	♦GESY	506-3
SC40E22	♦GESY	506-4
SC40E23	♦GESY	506-5
SC40E24	♦GESY	506-6
SC40E	♦GESY	506-7
	PIR	
SC40F	GESY	499-45
	PIR	
SC41A	GESY	499-91
	PIR	
SC41B12	♦GESY	501-4
SC41B13	♦GESY	501-5
SC41B14	♦GESY	501-6
SC41B	♦GESY	501-7
	PIR	
SC41D12	♦GESY	504-1
SC41D13	♦GESY	504-2
SC41D14	♦GESY	504-3
SC41D	♦GESY	504-4
	PIR	
SC41E12	♦GESY	506-8
SC41E13	♦GESY	506-9
SC41E14	♦GESY	506-10
SC41E	♦GESY	506-11
	PIR	
SC41F	GESY	499-46
	PIR	
SC45A	GESY	499-96
	PIR	
SC45B2	♦GESY	501-26
SC45B12	♦GESY	501-27
SC45B13	♦GESY	501-28
SC45B14	♦GESY	501-29
SC45B22	♦GESY	501-30
SC45B23	♦GESY	501-31
SC45B24	♦GESY	501-32
SC45B	♦GESY	501-33
	PIR	
SC45D2	♦GESY	504-23
SC45D12	♦GESY	504-24
SC45D13	♦GESY	504-25
SC45D14	♦GESY	504-26
SC45D22	♦GESY	504-27
SC45D23	♦GESY	504-28
SC45D24	♦GESY	504-29
SC45D	♦GESY	504-30
	PIR	
SC45E2	♦GESY	506-24
SC45E12	♦GESY	506-25
SC45E13	♦GESY	506-26
SC45E14	♦GESY	506-27
SC45E22	♦GESY	506-28
SC45E23	♦GESY	506-29
SC45E24	♦GESY	506-30
SC45E	♦GESY	506-31
	PIR	
SC45F	GESY	499-50
	PIR	
SC46A	GESY	499-97
	PIR	
SC46B12	♦GESY	501-34
SC46B13	♦GESY	501-35
SC46B14	♦GESY	501-36
SC46B	♦GESY	501-37
	PIR	
SC46D12	♦GESY	504-31
SC46D13	♦GESY	504-32
SC46D14	♦GESY	504-33
SC46D	♦GESY	504-34
	PIR	
SC46E12	♦GESY	506-32
SC46E13	♦GESY	506-33
SC46E14	♦GESY	506-34
SC46E	♦GESY	506-35
	PIR	
SC46F	GESY	499-51
	PIR	
SC50⊘	SET	399-38
SC50A	GESY	499-100
	PIR	
SC50B2	♦GESY	501-60
SC50B12	♦GESY	501-61
SC50B13	♦GESY	501-62
SC50B14	♦GESY	501-63
SC50B22	♦GESY	501-64
SC50B23	♦GESY	501-65
SC50B24	♦GESY	501-66

△-Registered with JEDEC by this manufacturer

♦-Copy of mfr's data sheet may be ordered from D.A.T.A.

1. TYPE No. CROSS INDEX

IN TYPE NUMBER SEQUENCE

TYPE No.	MFRS	Pg&Line
SC50B	♦GESY	501- 67
	PIR	
SC50D2	♦GESY	504- 57
SC50D12	♦GESY	504- 58
SC50D13	♦GESY	504- 59
SC50D14	♦GESY	504- 60
SC50D22	♦GESY	504- 61
SC50D23	♦GESY	504- 62
SC50D24	♦GESY	504- 63
SC50D	♦GESY	504- 64
	PIR	
SC50E2	♦GESY	506- 56
SC50E12	♦GESY	506- 57
SC50E13	♦GESY	506- 58
SC50E14	♦GESY	506- 59
SC50E22	♦GESY	506- 60
SC50E23	♦GESY	506- 61
SC50E24	♦GESY	506- 62
SC50E	♦GESY	506- 63
	PIR	
SC50F	GESY	499- 54
	PIR	
SC51A	GESY	499-101
	PIR	
SC51B12	♦GESY	501- 68
SC51B13	♦GESY	501- 69
SC51B14	♦GESY	501- 70
SC51B	♦GESY	501- 71
	PIR	
SC51D12	♦GESY	504- 65
SC51D13	♦GESY	504- 66
SC51D14	♦GESY	504- 67
SC51D	♦GESY	504- 68
	PIR	
SC51E12	♦GESY	506- 64
SC51E13	♦GESY	506- 65
SC51E14	♦GESY	506- 66
SC51E	♦GESY	506- 67
	PIR	
SC51F	GESY	499- 55
	PIR	
SC60B	♦GESY	501- 90
SC60D	♦GESY	504- 87
SC60E	♦GESY	506- 84
SC61B	♦GESY	501- 91
SC61D	♦GESY	504- 88
SC61E	♦GESY	506- 85
SC75	SET	402- 97
SC100⊘	SET	405- 77
SC115	TSAJ	304- 58
SC141B	♦GESY	502- 27
SC141D	♦GESY	505- 20
SC146B	♦GESY	502- 60
SC146D	♦GESY	505- 50
SC215	TSAJ	315- 90
SC315	TSAJ	324- 72
SC415	TSAJ	334- 97
SC0515	TSAJ	296- 81
SC515	TSAJ	343- 20
SC575	SET	403- 13
SC821	♦SLCB	174- 54
SC821A	♦SLCB	174- 55
SC823	♦SLCB	174- 56
SC823A	♦SLCB	174- 57
SC825	♦SLCB	174- 58
SC825A	♦SLCB	174- 59
SC827	♦SLCB	174- 60
SC827A	♦SLCB	174- 61
SC829	♦SLCB	174- 62
SC829A	♦SLCB	174- 63
SC1050	SET	399-106
SC5100	SET	406- 19
SC5125	SET	407- 41
SC5150	SET	408- 57
SC5200	SET	410- 26
SC5250	SET	411- 30
SC10100	SET	406- 37
SC10150	SET	408- 76
SCA1	SET	301- 6
SCA2	SET	312- 2
SCA3	SET	321-100
SCA4	SET	330- 92
SCA05	SET	294- 27
SCA5	SET	340- 74
SCA6	SET	348- 11
SCA8	SET	360-102
SCA10	SET	371- 31
SCBR1	♦HSC	301- 97
	SET	
SCBR1F	SET	278- 94
SCBR1M	SET	279-107
SCBR2	♦HSC	312- 96
	SET	
SCBR2F	SET	282- 52
SCBR2M	SET	283- 39
SCBR4	♦HSC	331- 81
	SET	
SCBR4F	SET	285- 25
SCBR4M	SET	285- 91
SCBR05F	HSC	272- 36
	SET	
SCBR05M	HSC	273- 3
	SET	
SCBR6	♦HSC	348-105
	SET	
SCBR6F	SET	286- 91
SCBR8	♦HSC	361- 71
	SET	
SCBR8M	SET	287- 98
SCBR10	♦HSC	371-100
SCBR10M	SET	288- 47
SCBR15A	SET	384- 58
SCBR20	SET	390- 28
SCBR20A	SET	390- 2

TYPE No.	MFRS	Pg&Line
SCBR25	SET	392- 68
SCBR25A	SET	392- 59
SCBR30	SET	394- 69
SCBR30A	SET	394- 52
SCBR40	SET	397- 35
SCBR40A	SET	397- 6
SCBR50	SET	399- 91
SCBR50A	SET	399- 67
SCBR75	SET	403- 8
SCBR75A	SET	402-108
SCBR100	SET	406- 18
SCBR100A	SET	405-105
SCDA1	♦SET	304- 59
SCDA2	♦SET	315- 91
SCDA3	♦SET	324- 73
SCDA4	♦SET	334- 98
SCDA05	♦SET	296- 82
SCDA6	♦SET	351-103
SCDAS1	♦SET	306- 39
SCDAS2	♦SET	317- 98
SCDAS3	♦SET	326- 24
SCDAS4	♦SET	337- 25
SCDAS05	♦SET	297- 99
SCDAS6	♦SET	353- 92
SCE1	SET	301- 7
SCE2	SET	312- 3
SCE4	SET	330- 93
SCE6	SET	348- 12
SCE8	SET	360-103
SCE10	SET	371- 32
SCE15	SET	384- 37
SCE20	SET	389- 86
SCE25	SET	392- 44
SCE25A	SET	392- 32
SCE30	SET	394- 26
SCE30A	SET	394- 7
SCE40	SET	396- 88
SCE40A	SET	396- 99
SCE50	SET	399- 39
SCE50A	SET	399- 47
SCE75	SET	402- 98
SCE100	SET	405- 78
SCF2500	SET	289- 15
SCF5000	SET	289- 75
SCF7500	SET	290- 41
SCF10000	SET	290- 78
SCF12500	SET	290-102
SCFS2500	♦SET	289- 16
SCFS5000	♦SET	289- 76
SCFS7500	♦SET	290- 42
SCFS10000	♦SET	290- 79
SCFS12500	♦SET	290-103
SCFS15000	♦SET	291- 12
SCH5000	SET	399- 93
SCH7500	SET	403- 10
SCH10000	SET	406- 22
SCH12500	SET	407- 44
SCH15000	SET	408- 66
SCH20000	SET	410- 35
SCH25000	SET	411- 41
SCHF5000	SET	289-105
SCHF7500	SET	290- 48
SCHF10000	SET	290-100
SCHF12500	SET	291- 6
SCHF15000	SET	291- 26
SCHF20000	SET	291- 52
SCHF25000	SET	291- 63
SCHJ15K	SET	408- 27
SCHJ22 5K	SET	410- 66
SCHJ30K	SET	412- 18
SCHJ37 5K	SET	412- 65
SCHJ45K	SET	412-100
SCHS2500	♦SET	392- 70
SCHS5000	♦SET	400- 10
SCHS7500	♦SET	403- 20
SCHS10000	♦SET	406- 54
SCHS12500	♦SET	378- 93
SCHS15000	♦SET	408- 85
SCM10	♦SET	369- 23
SCM15	♦SET	383-102
SCM20	♦SET	389- 32
SCM25	♦SET	392- 15
SCM30	♦SET	393- 65
SCM40	♦SET	396- 47
SCM50	♦SET	398-102
SCM60	♦SET	400- 67
SCM70	♦SET	402- 6
SCMS10K	♦SET	405- 29
SCMS15K	♦SET	408- 6
SCMS20K	♦SET	409- 92
SCMS30K	♦SET	412- 3
SCMS40K	♦SET	412- 70
SCNA1	♦SET	304- 60
SCNA2	♦SET	315- 92
SCNA3	♦SET	324- 74
SCNA4	♦SET	334- 99
SCNA05	♦SET	296- 83
SCNA6	♦SET	351-104
SCNAS1	♦SET	306- 40
SCNAS2	♦SET	317- 99
SCNAS3	♦SET	326- 25
SCNAS4	♦SET	337- 26
SCNAS05	♦SET	297-100
SCNAS6	♦SET	353- 93
SCPA1	♦SET	304- 61
SCPA2	♦SET	315- 93
SCPA3	♦SET	324- 75
SCPA4	♦SET	334-100
SCPA05	♦SET	296- 84
SCPA6	♦SET	351-105
SCPAS1	♦SET	306- 41
SCPAS2	♦SET	317-100
SCPAS3	♦SET	326- 26
SCPAS4	♦SET	337- 27

TYPE No.	MFRS	Pg&Line
SCPAS05	♦SET	297-101
SCPAS6	♦SET	353- 94
SCPD2	♦SET	342- 95
SCPD4	♦SET	373- 74
SCPD6	♦SET	385- 11
SCPD8	♦SET	390- 61
SCPD10	♦SET	392- 74
SCPD12	♦SET	394- 89
SCPD16	♦SET	397- 67
SCPD20	♦SET	400- 27
SCPD24	♦SET	401- 69
SCPD30	♦SET	403- 23
SCPD40	♦SET	406- 60
SCPD50	♦SET	407- 54
SCPH2	♦SET	373- 19
SCPH4	♦SET	390- 56
SCPH6	♦SET	394- 86
SCPH8	♦SET	397- 65
SCPH10	♦SET	400- 25
SCPH12	♦SET	401- 67
SCPH14	♦SET	402- 71
SCPH16	♦SET	404- 17
SCPH18	♦SET	404-102
SCPH20	♦SET	406- 59
SCPH22	♦SET	406- 88
SCPH24	♦SET	407- 53
SCPH26	♦SET	407- 75
SCPH28	♦SET	407-109
SCPH30	♦SET	408- 90
SCPH32	♦SET	409- 23
SCPH34	♦SET	409- 40
SCPH36	♦SET	409- 67
SCPH38	♦SET	409- 87
SCPH40	♦SET	410- 48
SCPH42	♦SET	410- 63
SCPH44	♦SET	410- 79
SCPH46	♦SET	410- 92
SCPH48	♦SET	410-107
SCPH50	♦SET	411- 55
SCPN2	♦SET	342- 96
SCPN4	♦SET	373- 75
SCPN6	♦SET	385- 12
SCPN8	♦SET	390- 62
SCPN10	♦SET	392- 75
SCPN12	♦SET	394- 90
SCPN16	♦SET	397- 68
SCPN20	♦SET	400- 28
SCPN24	♦SET	401- 70
SCPN30	♦SET	403- 24
SCPN40	♦SET	406- 61
SCPN50	♦SET	407- 55
SCPP2	♦SET	342- 97
SCPP4	♦SET	373- 76
SCPP6	♦SET	385- 13
SCPP8	♦SET	390- 63
SCPP10	♦SET	392- 76
SCPP12	♦SET	394- 91
SCPP16	♦SET	397- 69
SCPP20	♦SET	400- 29
SCPP24	♦SET	401- 71
SCPP30	♦SET	403- 25
SCPP40	♦SET	406- 62
SCPP50	♦SET	407- 56
SCR10A	SCN	418- 16
SCR11A	SCN	424- 9
SCR12A	SCN	433- 2
SCR13A	SCN	442- 71
SCR14A	SCN	449- 20
SCR15A	SCN	457- 28
SCR16A	SCN	462- 98
SCR17A	SCN	470- 74
SCR18A	SCN	473- 99
SCR30A	SCN	418- 77
SCR31A	SCN	424- 88
SCR32A	SCN	433- 99
SCR33A	SCN	443- 10
SCR34A	SCN	449-100
SCR35A	SCN	457- 49
SCR36A	SCN	463- 37
SCR37A	SCN	470- 84
SCR38A	SCN	474- 23
SCR50A	SCN	419- 34
SCR51A	SCN	425- 66
SCR52A	SCN	434- 87
SCR53A	SCN	443- 65
SCR54A	SCN	450- 83
SCR55A	SCN	457-105
SCR56A	SCN	463-110
SCR57A	SCN	470- 94
SCR58A	SCN	474- 51
SCR150	SCN	457- 32
SCR160	SCN	462-109
SCR160A	SCN	420- 50
SCR161A	SCN	427- 77
SCR162A	SCN	437- 8
SCR163A	SCN	445- 19
SCR164A	SCN	453- 7
SCR165A	SCN	459- 72
SCR166A	SCN	466- 13
SCR167A	SCN	471- 51
SCR168A	SCN	475- 78
SCR303	SCN	417- 31
SCR315	SCN	430- 73
SCR325	SCN	440- 97
SCR335	SCN	448- 13
SCR345	SCN	456- 75
SCR350	SCN	457- 50
SCR355	SCN	462- 68
SCR360	SCN	463- 38
SCR370	SCN	470- 85
SCR380	SCN	474- 24
SCR535	SCN	448- 15
SCR535A	SCN	448- 17
SCR545	SCN	456- 76

TYPE No.	MFRS	Pg&Line
SCR545A	SCN	456- 78
SCR550A	SCN	457-109
SCR555	SCN	462- 70
SCR555A	SCN	462- 72
SCR560A	SCN	464- 5
SCR570	SCN	470- 95
SCR570A	SCN	470- 98
SCR580	SCN	474- 52
SCR580A	SCN	474- 55
SCR835	SCN	448- 20
SCR845	SCN	456- 79
SCR855	SCN	462- 75
SCR860	SCN	465- 19
SCR865	SCN	470- 63
SCR870	SCN	471- 11
SCR875	SCN	473- 84
SCR880	SCN	475- 5
SCR1635	SCN	448- 27
SCR1635A	SCN	448- 28
SCR1645	SCN	456- 84
SCR1645A	SCN	456- 85
SCR1655	SCN	462- 76
SCR1655A	SCN	462- 77
SCR1660A	SCN	466- 14
SCR1670A	SCN	471- 52
SCR1680A	SCN	475- 79
SCRF10A	SCN	418- 17
SCRF11A	SCN	424- 10
SCRF12A	SCN	433- 3
SCRF13A	SCN	442- 72
SCRF14A	SCN	449- 21
SCRF15A	SCN	457- 29
SCRF16A	SCN	462- 99
SCRF17A	SCN	470- 75
SCRF18A	SCN	473-100
SCRF30A	SCN	418- 78
SCRF31A	SCN	424- 89
SCRF32A	SCN	433-100
SCRF33A	SCN	443- 11
SCRF34A	SCN	449-101
SCRF35A	SCN	457- 51
SCRF36A	SCN	463- 39
SCRF37A	SCN	470- 86
SCRF38A	SCN	474- 25
SCRF50A	SCN	419- 35
SCRF51A	SCN	425- 67
SCRF52A	SCN	434- 88
SCRF53A	SCN	443- 66
SCRF54A	SCN	450- 84
SCRF55A	SCN	457-106
SCRF56A	SCN	464- 1
SCRF57A	SCN	470- 96
SCRF58A	SCN	474- 53
SCRF160A	SCN	420- 51
SCRF161A	SCN	427- 78
SCRF162A	SCN	437- 9
SCRF163A	SCN	445- 20
SCRF164A	SCN	453- 8
SCRF165A	SCN	459- 73
SCRF166A	SCN	466- 15
SCRF167A	SCN	471- 53
SCRF168A	SCN	475- 80
SCRF503	SCN	417- 51
SCRF505	SCN	419- 36
SCRF510	SCN	425- 68
SCRF515	SCN	430- 86
SCRF520	SCN	434- 89
SCRF525	SCN	440-106
SCRF530	SCN	443- 67
SCRF535	SCN	448- 16
SCRF540	SCN	450- 85
SCRF545	SCN	456- 77
SCRF550	SCN	457-107
SCRF555	SCN	462- 71
SCRF560	SCN	464- 2
SCRF570	SCN	470- 97
SCRF580	SCN	474- 54
SCRF1603	SCN	417- 81
SCRF1605	SCN	420- 52
SCRF1610	SCN	427- 79
SCRF1615	SCN	431- 5
SCRF1620	SCN	437- 10
SCRF1625	SCN	441- 25
SCRF1630	SCN	445- 21
SCRF1635	SCN	448- 29
SCRF1640	SCN	453- 9
SCRF1645	SCN	456- 86
SCRF1650	SCN	459- 74
SCRF1655	SCN	462- 78
SCRF1660	SCN	466- 16
SCRF1665	SCN	470- 64
SCRF1670	SCN	471- 54
SCRF1680	SCN	475- 81
SCRFL03	SCN	417- 1
SCRFL05	SCN	418- 38
SCRFL10	SCN	424- 42
SCRFL15	SCN	430- 69
SCRFL20	SCN	433- 43
SCRFL25	SCN	440- 94
SCRFL30	SCN	442- 90
SCRFL35	SCN	448- 11
SCRFL40	SCN	449- 49
SCRFL45	SCN	456- 73
SCRFL50	SCN	457- 33
SCRFL55	SCN	462- 66
SCRFL60	SCN	462-110
SCRFL70	SCN	470- 77
SCRFL80	SCN	473-107
SCRL35	SCN	448- 12
SCRL40	SCN	449- 50
SCRL45	SCN	456- 74
SCRL50	SCN	457- 34
SCRL55	SCN	462- 67
SCRL60	SCN	463- 1

TYPE No.	MFRS	Pg&Line
SCRL70	SCN	470- 78
SCRL80	SCN	473-108
SCSDF1L	♦SET	279- 6
SCSDF1W	♦SET	279- 7
SCSDF2L	♦SET	282- 74
SCSDF2W	♦SET	282- 75
SCSDF4L	♦SET	285- 46
SCSDF4W	♦SET	285- 47
SCSDF05L	♦SET	272- 54
SCSDF05W	♦SET	272- 55
SCSDF6L	♦SET	287- 21
SCSDF6W	♦SET	287- 22
SCSDM1L	♦SET	277- 5
SCSDM1W	♦SET	277- 6
SCSDM2L	♦SET	281- 80
SCSDM2W	♦SET	281- 81
SCSDM4L	♦SET	284- 97
SCSDM4W	♦SET	284- 98
SCSDM05L	♦SET	270- 17
SCSDM05W	♦SET	270- 18
SCSDM6L	♦SET	286- 68
SCSDM6W	♦SET	286- 69
SCSF1	♦SET	279- 8
SCSF2	♦SET	282- 76
SCSF4	♦SET	285- 48
SCSF05	♦SET	272- 56
SCSF6	♦SET	287- 23
SCSM1	♦SET	277- 7
SCSM2	♦SET	281- 82
SCSM4	♦SET	284- 99
SCSM05	♦SET	270- 19
SCSM6	♦SET	286- 70
SCSNF1L	♦SET	279- 9
SCSNF1W	♦SET	279- 10
SCSNF2L	♦SET	282- 77
SCSNF2W	♦SET	282- 78
SCSNF4L	♦SET	285- 49
SCSNF4W	♦SET	285- 50
SCSNF05L	♦SET	272- 57
SCSNF05W	♦SET	272- 58
SCSNF6L	♦SET	287- 24
SCSNF6W	♦SET	287- 25
SCSNM1L	♦SET	277- 8
SCSNM1W	♦SET	277- 9
SCSNM2L	♦SET	281- 83
SCSNM2W	♦SET	281- 84
SCSNM4L	♦SET	284-100
SCSNM4W	♦SET	284-101
SCSNM05L	♦SET	270- 20
SCSNM05W	♦SET	270- 21
SCSNM6L	♦SET	286- 71
SCSNM6W	♦SET	286- 72
SCSPF1L	♦SET	279- 11
SCSPF1W	♦SET	279- 12
SCSPF2L	♦SET	282- 79
SCSPF2W	♦SET	282- 80
SCSPF4L	♦SET	285- 51
SCSPF4W	♦SET	285- 52
SCSPF05L	♦SET	272- 59
SCSPF05W	♦SET	272- 60
SCSPF6L	♦SET	287- 26
SCSPF6W	♦SET	287- 27
SCSPM1L	♦SET	277- 10
SCSPM1W	♦SET	277- 11
SCSPM2L	♦SET	281- 85
SCSPM2W	♦SET	281- 86
SCSPM4L	♦SET	284-102
SCSPM4W	♦SET	284-103
SCSPM05L	♦SET	270- 22
SCSPM05W	♦SET	270- 23
SCSPM6L	♦SET	286- 73
SCSPM6W	♦SET	286- 74
SCT1	SET	278- 95
SCT2	SET	282- 53
SCT3	SET	284- 32
SCT4	SET	285- 26
SCT5	SET	286- 32
SCXR50K	♦SET	413- 6
SCXR75K	♦SET	413- 18
SCXR100K	♦SET	413- 24
SCXR125K	♦SET	413- 36
SCXR150K	♦SET	413- 40
SCXR175K	♦SET	413- 43
SCXR200K	♦SET	413- 44
SD1△	SAKJ	328-105
SD1⊘	DII	300- 86
SD1A	SAKJ	346- 48
SD1B	SAKJ	359- 59
SD1C	SAKJ	370- 4
SD1W	SOD	601- 27
SD1Y	SAKJ	305- 67
SD1Z	SAKJ	310- 37
SD2△	DII	311- 70
SD2⊘	SOD	601- 28
SD2A1020E4	INRB	580- 98
INRC	INRI	
	INRJ	
SD2A1020E6	INRB	580- 99
INRC	INRI	
	INRJ	
SD2L	SOD	601- 29
SD2LE	SOD	601- 30
SD2LEE	SOD	601- 31
SD2WE	SOD	601- 32
SD4	DII	330- 52
SD05	DII	294- 6
SD5	SHWG	292- 8
SD6	DII	347- 83
SD7	SHWG	292- 9
SD8	DII	360- 68
SD11-1	SDI	530- 81
SD11-2	SDI	530- 82
SD11-3	SDI	524- 16
SD11-4	SDI	524- 17

△-Registered with JEDEC by this manufacturer

♦-Copy of mfr's data sheet may be ordered from D.A.T.A.

1. TYPE No. CROSS INDEX

IN TYPE NUMBER SEQUENCE

TYPE No	MFRS	Pg&Line
SD11-5,6,7	SDI	521- 89
SD11A6	SDI	527- 17
SD11A12	SDI	527- 81
SD11A18	SDI	528- 32
SD11A24	SDI	526- 10
SD11A48	SDI	527- 36
SD11A60	SDI	527- 68
SD11A90	SDI	524- 18
SD11A100	SDI	524- 19
SD11A120	SDI	524- 82
SD11AL6	SDI	520- 13
SD11AL12	SDI	519- 59
SD11AL18	SDI	519- 66
SD11AL24	SDI	520- 1
SD11AL48	SDI	520- 41
SD11AL60	SDI	520- 47
SD11AL90	SDI	520- 55
SD11AL100	SDI	520- 56
SD11AL120	SDI	521- 90
SD11B6	SDI	530- 30
SD11B12	SDI	530- 83
SD11B18	SDI	531- 76
SD11B24	SDI	528-108
SD11B48	SDI	530- 42
SD11B60	SDI	530- 56
SD11B90	SDI	527- 82
SD11B100	SDI	527- 83
SD11B120	SDI	528- 33
SD11BL6	SDI	523- 39
SD11BL12	SDI	520- 57
SD11BL18	SDI	521- 91
SD11BL24	SDI	523- 23
SD11BL48	SDI	523- 92
SD11BL60	SDI	523-107
SD11C6	SDI	532- 94
SD11C12	SDI	533- 61
SD11C18	SDI	534- 61
SD11C24	SDI	532- 2
SD11C48	SDI	533- 29
SD11C60	SDI	533- 44
SD11C90	SDI	530- 84
SD11C100	SDI	530- 85
SD11C120	SDI	531- 77
SD11CL12	SDI	524- 20
SD11CL18	SDI	524- 83
SD11D6	SDI	535- 28
SD11D12	SDI	538- 70
SD11D18	SDI	539- 55
SD11D24	SDI	535- 2
SD11D48	SDI	538- 58
SD11D60	SDI	538- 78
SD11D90	SDI	533- 62
SD11D100	SDI	533- 63
SD11D120	SDI	534- 62
SD11E6	SDI	543- 8
SD11E12	SDI	544- 51
SD11E18	SDI	547- 61
SD11E24	SDI	539- 86
SD11E48	SDI	544- 21
SD11E60	SDI	544- 22
SD11E90	SDI	538- 85
SD11E100	SDI	538- 86
SD11E120	SDI	539- 78
SD11F6	SDI	551- 60
SD11F12	SDI	553- 6
SD11F18	SDI	555- 82
SD11F24	SDI	549- 7
SD11F48	SDI	552- 4
SD11F60	SDI	552- 97
SD11F	NECJ	252- 38
SD11G6	SDI	558- 97
SD11G12	SDI	559- 85
SD11G18	SDI	561- 9
SD11G24	SDI	556- 66
SD11G48	SDI	559- 1
SD12-1	SDI	530- 86
SD12-2	SDI	530- 87
SD12-3	SDI	524- 21
SD12-4	SDI	524- 22
SD12-5,6,7	SDI	521- 92
SD12A6	SDI	527- 18
SD12A12	SDI	527- 84
SD12A18	SDI	528- 34
SD12A24	SDI	526- 11
SD12A48	SDI	527- 37
SD12A60	SDI	527- 69
SD12A90	SDI	524- 23
SD12A100	SDI	524- 24
SD12A120	SDI	524- 84
SD12AL6	SDI	520- 14
SD12AL12	SDI	519- 60
SD12AL18	SDI	519- 67
SD12AL24	SDI	520- 2
SD12AL48	SDI	520- 42
SD12AL60	SDI	520- 48
SD12AL90	SDI	520- 58
SD12AL100	SDI	520- 59
SD12AL120	SDI	521- 93
SD12B6	SDI	530- 31
SD12B12	SDI	530- 88
SD12B18	SDI	531- 78
SD12B24	SDI	528-109
SD12B48	SDI	530- 43
SD12B60	SDI	530- 57
SD12B90	SDI	527- 85
SD12B100	SDI	527- 86
SD12B120	SDI	528- 35
SD12B	NECJ	249- 81
SD12BL6	SDI	523- 40
SD12BL12	SDI	520- 60
SD12BL18	SDI	521- 94
SD12BL24	SDI	523- 24
SD12BL48	SDI	523- 93
SD12BL60	SDI	523-108

TYPE No.	MFRS	Pg&Line
SD12C6	SDI	532- 95
SD12C12	SDI	533- 64
SD12C18	SDI	534- 63
SD12C24	SDI	532- 3
SD12C48	SDI	533- 30
SD12C60	SDI	533- 45
SD12C90	SDI	530- 89
SD12C100	SDI	530- 90
SD12C120	SDI	531- 79
SD12CL12	SDI	524- 25
SD12CL18	SDI	524- 85
SD12D6	SDI	535- 29
SD12D12	SDI	538- 71
SD12D18	SDI	539- 56
SD12D24	SDI	535- 3
SD12D48	SDI	538- 59
SD12D60	SDI	538- 79
SD12D90	SDI	533- 65
SD12D100	SDI	533- 66
SD12D120	SDI	534- 64
SD12E6	SDI	543- 9
SD12E12	SDI	544- 52
SD12E18	SDI	547- 62
SD12E24	SDI	539- 87
SD12E48	SDI	544- 23
SD12E60	SDI	544- 24
SD12E90	SDI	538- 87
SD12E100	SDI	538- 88
SD12E120	SDI	539- 79
SD12E	NECJ	249- 86
SD12F6	SDI	551- 61
SD12F12	SDI	553- 7
SD12F18	SDI	555- 83
SD12F24	SDI	549- 8
SD12F48	SDI	552- 5
SD12F60	SDI	552- 98
SD12G6	SDI	558- 98
SD12G12	SDI	559- 86
SD12G18	SDI	561- 10
SD12G24	SDI	556- 67
SD12G48	SDI	559- 2
SD12M	NECJ	249-103
SD13	NECJ	250- 39
SD14	NECJ	250- 40
SD15△	SHWG	292- 19
SD15⧄	NECJ	249- 26
SD16	NECJ	248- 39
SD17	NECJ	252- 57
SD18	NECJ	254- 16
SD22-1	SDI	530- 91
SD22-2	SDI	530- 92
SD22-3	SDI	524- 26
SD22-4	SDI	524- 27
SD22-5,6,7	SDI	521- 95
SD22A6	SDI	527- 19
SD22A12	SDI	527- 87
SD22A18	SDI	528- 36
SD22A24	SDI	526- 12
SD22A48	SDI	527- 38
SD22A60	SDI	527- 70
SD22A90	SDI	524- 28
SD22A100	SDI	524- 29
SD22A120	SDI	524- 86
SD22AL6	SDI	520- 15
SD22AL12	SDI	519- 61
SD22AL18	SDI	519- 68
SD22AL24	SDI	520- 3
SD22AL48	SDI	520- 43
SD22AL60	SDI	520- 49
SD22AL90	SDI	520- 61
SD22AL100	SDI	520- 62
SD22AL120	SDI	521- 96
SD22B6	SDI	530- 32
SD22B12	SDI	530- 93
SD22B18	SDI	531- 80
SD22B24	SDI	528-110
SD22B48	SDI	530- 44
SD22B60	SDI	530- 58
SD22B90	SDI	527- 88
SD22B100	SDI	527- 89
SD22B120	SDI	528- 37
SD22BL6	SDI	523- 41
SD22BL12	SDI	520- 63
SD22BL18	SDI	521- 97
SD22BL24	SDI	523- 25
SD22BL48	SDI	523- 94
SD22BL60	SDI	523-109
SD22C6	SDI	532- 96
SD22C12	SDI	533- 67
SD22C18	SDI	534- 65
SD22C24	SDI	532- 4
SD22C48	SDI	533- 31
SD22C60	SDI	533- 46
SD22C90	SDI	530- 94
SD22C100	SDI	530- 95
SD22C120	SDI	531- 81
SD22CL12	SDI	524- 30
SD22CL18	SDI	524- 87
SD22D6	SDI	535- 30
SD22D12	SDI	538- 72
SD22D18	SDI	539- 57
SD22D24	SDI	535- 4
SD22D48	SDI	538- 60
SD22D60	SDI	538- 80
SD22D90	SDI	533- 68
SD22D100	SDI	533- 69
SD22D120	SDI	534- 66
SD22E6	SDI	543- 10
SD22E12	SDI	544- 53
SD22E18	SDI	547- 63
SD22E24	SDI	539- 88
SD22E48	SDI	544- 25
SD22E60	SDI	544- 26
SD22E90	SDI	538- 89

TYPE No.	MFRS	Pg&Line
SD22E100	SDI	538- 90
SD22E120	SDI	539- 80
SD22F6	SDI	551- 62
SD22F12	SDI	553- 8
SD22F18	SDI	555- 84
SD22F24	SDI	549- 9
SD22F48	SDI	552- 6
SD22F60	SDI	552- 99
SD22G6	SDI	558- 99
SD22G12	SDI	559- 87
SD22G18	SDI	561- 11
SD22G24	SDI	556- 68
SD22G48	SDI	559- 3
SD30	SHWG	292- 52
SD32-1	SDI	530- 96
SD32-2	SDI	530- 97
SD32-3	SDI	524- 31
SD32-4	SDI	524- 32
SD32-5,6,7	SDI	521- 98
SD32A6	SDI	527- 20
SD32A12	SDI	527- 90
SD32A18	SDI	528- 38
SD32A24	SDI	526- 13
SD32A48	SDI	527- 39
SD32A60	SDI	527- 71
SD32A90	SDI	524- 33
SD32A100	SDI	524- 34
SD32A120	SDI	524- 88
SD32AL6	SDI	520- 16
SD32AL12	SDI	519- 62
SD32AL18	SDI	519- 69
SD32AL24	SDI	520- 4
SD32AL48	SDI	520- 44
SD32AL60	SDI	520- 50
SD32AL90	SDI	520- 64
SD32AL100	SDI	520- 65
SD32AL120	SDI	521- 99
SD32B6	SDI	530- 33
SD32B12	SDI	530- 98
SD32B18	SDI	531- 82
SD32B24	SDI	529- 1
SD32B48	SDI	530- 45
SD32B60	SDI	530- 59
SD32B90	SDI	527- 91
SD32B100	SDI	527- 92
SD32B120	SDI	528- 39
SD32BL6	SDI	523- 42
SD32BL12	SDI	520- 66
SD32BL18	SDI	521-100
SD32BL24	SDI	523- 26
SD32BL48	SDI	523- 95
SD32BL60	SDI	523-110
SD32C6	SDI	532- 97
SD32C12	SDI	533- 70
SD32C18	SDI	534- 67
SD32C24	SDI	532- 5
SD32C48	SDI	533- 32
SD32C60	SDI	533- 47
SD32C90	SDI	530- 99
SD32C100	SDI	530-100
SD32C120	SDI	531- 83
SD32CL12	SDI	524- 35
SD32CL18	SDI	524- 89
SD32D6	SDI	535- 31
SD32D12	SDI	538- 73
SD32D18	SDI	539- 58
SD32D24	SDI	535- 5
SD32D48	SDI	538- 61
SD32D60	SDI	538- 81
SD32D90	SDI	533- 71
SD32D100	SDI	533- 72
SD32D120	SDI	534- 68
SD32E6	SDI	543- 11
SD32E12	SDI	544- 54
SD32E18	SDI	547- 64
SD32E24	SDI	539- 89
SD32E48	SDI	544- 27
SD32E60	SDI	544- 28
SD32E90	SDI	538- 91
SD32E100	SDI	538- 92
SD32E120	SDI	539- 81
SD32F6	SDI	551- 63
SD32F12	SDI	553- 9
SD32F18	SDI	555- 85
SD32F24	SDI	549- 10
SD32F48	SDI	552- 7
SD32F60	SDI	552-100
SD32G6	SDI	558-100
SD32G12	SDI	559- 88
SD32G18	SDI	561- 12
SD32G24	SDI	556- 69
SD32G48	SDI	559- 4
SD34	NECJ	252- 39
SD38	NECJ	254- 90
SD42-1	SDI	530-101
SD42-2	SDI	530-102
SD42-3	SDI	524- 36
SD42-4	SDI	524- 37
SD42-5,6,7	SDI	521-101
SD42A6	SDI	527- 21
SD42A12	SDI	527- 93
SD42A18	SDI	528- 40
SD42A24	SDI	526- 14
SD42A48	SDI	527- 40
SD42A60	SDI	527- 72
SD42A90	SDI	524- 38
SD42A100	SDI	524- 39
SD42A120	SDI	524- 90
SD42AL6	SDI	520- 17
SD42AL12	SDI	519- 63
SD42AL18	SDI	519- 70
SD42AL24	SDI	520- 5
SD42AL48	SDI	520- 45
SD42AL60	SDI	520- 51

TYPE No.	MFRS	Pg&Line
SD42AL90	SDI	520- 67
SD42AL100	SDI	520- 68
SD42AL120	SDI	521-102
SD42B6	SDI	530- 34
SD42B12	SDI	530-103
SD42B18	SDI	531- 84
SD42B24	SDI	529- 2
SD42B48	SDI	530- 46
SD42B60	SDI	530- 60
SD42B90	SDI	527- 94
SD42B100	SDI	527- 95
SD42B120	SDI	528- 41
SD42BL6	SDI	523- 43
SD42BL12	SDI	520- 69
SD42BL18	SDI	521-103
SD42BL24	SDI	523- 27
SD42BL48	SDI	523- 96
SD42BL60	SDI	524- 1
SD42C6	SDI	532- 98
SD42C12	SDI	533- 73
SD42C18	SDI	534- 69
SD42C24	SDI	532- 6
SD42C48	SDI	533- 33
SD42C60	SDI	533- 48
SD42C90	SDI	530-104
SD42C100	SDI	530-105
SD42C120	SDI	531- 85
SD42CL12	SDI	524- 40
SD42CL18	SDI	524- 91
SD42D6	SDI	535- 32
SD42D12	SDI	538- 74
SD42D18	SDI	539- 59
SD42D24	SDI	535- 6
SD42D48	SDI	538- 62
SD42D60	SDI	538- 82
SD42D90	SDI	533- 74
SD42D100	SDI	533- 75
SD42D120	SDI	534- 70
SD42E6	SDI	543- 12
SD42E12	SDI	544- 55
SD42E18	SDI	547- 65
SD42E24	SDI	539- 90
SD42E48	SDI	544- 29
SD42E60	SDI	544- 30
SD42E90	SDI	538- 93
SD42E100	SDI	538- 94
SD42E120	SDI	539- 82
SD42F6	SDI	551- 64
SD42F12	SDI	553- 10
SD42F18	SDI	555- 86
SD42F24	SDI	549- 11
SD42F48	SDI	552- 8
SD42F60	SDI	552-101
SD42G6	SDI	558-101
SD42G12	SDI	559- 89
SD42G18	SDI	561- 13
SD42G24	SDI	556- 70
SD42G48	SDI	559- 5
SD46	NECJ	250-101
SD50	SHWG	292- 76
SD54	NECJ	252- 40
SD56	NECJ	250- 5
SD60	NECJ	601- 33
SD60P	SAKJ	581-105
SD61P	SAKJ	581-106
SD80△	SHWG	298- 68
SD82A	♦NECJ	575- 23
SD91	INRB	299-103
	INRC	INRI
		INRJ
SD91A	INRB	300- 39
	INRC	INRI
		INRJ
SD91S	♦INRI	301- 50
SD92	INRB	310- 72
	INRC	INRI
		INRJ
SD92A	INRB	311- 15
	INRC	INRI
		INRJ
SD92S	♦INRI	312- 50
SD93	INRB	321- 3
	INRC	INRI
		INRJ
SD93A	INRB	321- 42
	INRC	INRI
		INRJ
SD94	INRB	329- 40
	INRC	INRI
		INRJ
SD94A	INRB	329-101
	INRC	INRI
		INRJ
SD94S	♦INRI	331- 31
SD95	INRB	339- 85
	INRC	INRI
		INRJ
SD95A	INRB	340- 17
	INRC	INRI
		INRJ
SD96	INRB	346- 78
	INRC	INRI
		INRJ
SD96A	INRB	347- 22
	INRC	INRI
		INRJ
SD96S	♦INRI	348- 53
SD98	INRB	359- 86
	INRC	INRI
		INRJ
SD98A	INRB	360- 18
	INRC	INRI
		INRJ
SD98S	♦INRI	361- 25

TYPE No	MFRS	Pg&Line
SD120	SHWG	307- 23
SD200	SHWG	309- 53
SD500	INRB	329-102
	INRC	INRI
		INRJ
SD503K	AEIL	344- 42
SD603K	AEIL	353- 68
SD703K	AEIL	357- 99
SD803K	AEIL	365- 77
SD903K	AEIL	368- 32
SD910	INRB	370- 28
	INRC	INRI
		INRJ
SD910A	INRB	370- 62
	INRC	INRI
		INRJ
SD910S	♦INRI	371- 59
SD1003K	AEIL	375- 15
SD1103K	AEIL	376- 93
SD1203K	AEIL	380- 23
SD1303K	AEIL	381- 63
SD1403K	AEIL	382- 97
SD1503K	AEIL	385- 30
SD1603K	AEIL	386- 99
SDA1020E4	INRB	580-100
	INRC	INRI
		INRJ
SDA1020E6	INRB	580-101
	INRC	INRI
		INRJ
SDGPA6	SDI	527- 22
SDGPA12	SDI	527- 96
SDGPA18	SDI	528- 42
SDGPA24	SDI	526- 15
SDGPA48	SDI	527- 41
SDGPA60	SDI	527- 73
SDGPA90	SDI	524- 41
SDGPA100	SDI	524- 42
SDGPA120	SDI	524- 92
SDGPAL6	SDI	520- 18
SDGPAL12	SDI	519- 64
SDGPAL18	SDI	519- 71
SDGPAL24	SDI	520- 6
SDGPAL48	SDI	520- 46
SDGPAL60	SDI	520- 52
SDGPAL90	SDI	520- 70
SDGPAL100	SDI	520- 71
SDGPAL120	SDI	521-104
SDGPB6	SDI	530- 35
SDGPB12	SDI	530-106
SDGPB18	SDI	531- 86
SDGPB24	SDI	529- 3
SDGPB48	SDI	530- 47
SDGPB60	SDI	530- 61
SDGPB90	SDI	527- 97
SDGPB100	SDI	527- 98
SDGPB120	SDI	528- 43
SDGPBL6	SDI	523- 44
SDGPBL12	SDI	520- 72
SDGPBL18	SDI	521-105
SDGPBL24	SDI	523- 28
SDGPBL48	SDI	523- 97
SDGPBL60	SDI	524- 2
SDGPC6	SDI	532- 99
SDGPC12	SDI	533- 76
SDGPC18	SDI	534- 71
SDGPC24	SDI	532- 7
SDGPC48	SDI	533- 34
SDGPC60	SDI	533- 49
SDGPC90	SDI	530-107
SDGPC100	SDI	530-108
SDGPC120	SDI	531- 87
SDGPCL12	SDI	524- 43
SDGPCL18	SDI	524- 93
SDGPD6	SDI	535- 33
SDGPD12	SDI	538- 75
SDGPD18	SDI	539- 60
SDGPD24	SDI	535- 7
SDGPD48	SDI	538- 63
SDGPD60	SDI	538- 83
SDGPD90	SDI	533- 77
SDGPD100	SDI	533- 78
SDGPD120	SDI	534- 72
SDGPE6	SDI	543- 13
SDGPE12	SDI	544- 56
SDGPE18	SDI	547- 66
SDGPE24	SDI	539- 91
SDGPE48	SDI	544- 31
SDGPE60	SDI	544- 32
SDGPE90	SDI	538- 95
SDGPE100	SDI	538- 96
SDGPE120	SDI	539- 83
SDGPF6	SDI	551- 65
SDGPF12	SDI	553- 11
SDGPF18	SDI	555- 87
SDGPF24	SDI	549- 12
SDGPF48	SDI	552- 9
SDGPF60	SDI	552-102
SDGPG6	SDI	558-102
SDGPG12	SDI	559- 90
SDGPG18	SDI	561- 14
SDGPG24	SDI	556- 71
SE1 5A	ORIJ	331- 95
SE1 5B	ORIJ	349- 9
SE1 5C	ORIJ	361- 83
SE1 5D	ORIJ	372- 2
SE1.5S	ORIJ	312-109
SE1.5SS	ORIJ	301-108
SE05A	ORIJ	328-101
SE05B	ORIJ	346- 46
SE05C	ORIJ	359- 55
SE05D	ORIJ	369-109
SE05S	ORIJ	310- 34
SE05SS	ORIJ	299- 71

△-Registered with JEDEC by this manufacturer

♦-Copy of mfr's data sheet may be ordered from D.A.T.A.

1. TYPE No. CROSS INDEX

IN TYPE NUMBER SEQUENCE

TYPE No.	MFRS	Pg&Line
SE1730	TEC	369- 69
SE1731	TEC	384- 27
SE1732	TEC	389- 75
SE1733	TEC	394- 5
SE1734	TEC	399- 35
SE2382	TEC	396- 97
SE2383	TEC	400-106
SE2384	TEC	403- 60
SE2385	TEC	405- 68
SE9202	♦FSC	443- 94
SE9222	♦FSC	433-105
SEN2A1	♦SEN	302- 39
SEN2A2	♦SEN	313- 43
SEN2A4	♦SEN	332- 30
SEN2A6	♦SEN	349- 51
SEN2A8	♦SEN	362- 6
SEN2A10	♦SEN	372- 31
SEN105	♦SEN	294- 28
SEN110	♦SEN	301- 8
SEN120	♦SEN	312- 4
SEN130	♦SEN	321-101
SEN140	♦SEN	330- 94
SEN150	♦SEN	340- 75
SEN160	♦SEN	348- 13
SEN180	♦SEN	360-104
SEN205	♦SEN	295- 17
SEN210	♦SEN	302- 40
SEN220	♦SEN	313- 44
SEN230	♦SEN	322-100
SEN240	♦SEN	332- 31
SEN250	♦SEN	341- 61
SEN260	♦SEN	349- 52
SEN280	♦SEN	362- 7
SEN305	♦SEN	295- 83
SEN310	♦SEN	303- 17
SEN320	♦SEN	314- 26
SEN330	♦SEN	323- 55
SEN340	♦SEN	333- 19
SEN350	♦SEN	342- 12
SEN360	♦SEN	350- 37
SEN380	♦SEN	362- 93
SEN1100	♦SEN	371- 33
SEN2100	♦SEN	372- 32
SEN3100	♦SEN	372-100
SF0R2B41	TOSJ	423- 35
SF0R2D41	TOSJ	432- 39
SF1	SAKJ	581-107
SF1A11	TOSJ	418- 33
SF1A11A	TOSJ	418- 25
SF1AN6	♦WESB	279- 13
SF1AN12	♦WESB	279- 14
SF1B11	TOSJ	424- 35
SF1B11A	TOSJ	424- 26
SF1C11	TOSJ	430- 66
SF1C11A	TOSJ	430- 59
SF1CN1	♦WESB	279- 15
SF1D11	TOSJ	433- 36
SF1D11A	TOSJ	433- 27
SF1E11	TOSJ	440- 92
SF1E11A	TOSJ	440- 88
SF1F11	TOSJ	442- 87
SF1F11A	TOSJ	442- 79
SF1G11	TOSJ	449- 46
SF1G11A	TOSJ	449- 39
SF1GR315	WESB	280- 7
SF1HR315	WESB	280- 8
SF1R3B41	TOSJ	424- 49
SF1R3D41	TOSJ	433- 50
SF1Z11	TOSJ	414- 93
SF1Z11A	TOSJ	414- 87
SF2AN6	♦WESB	282- 81
SF2AN12	♦WESB	282- 82
SF2CN1	♦WESB	282- 83
SF2GR315	WESB	283- 57
SF2HR315	WESB	283- 58
SF3	SET	284- 33
SF3AN6	♦WESB	284- 46
SF3AN12	♦WESB	284- 47
SF3CN1	♦WESB	284- 48
SF3GR315	WESB	284- 66
SF3HR315	WESB	284- 67
SF4	SET	285- 27
SF4AN6	♦WESB	285- 53
SF4AN12	♦WESB	285- 54
SF4CN1	♦WESB	285- 55
SF4GR315	WESB	285-110
SF4HR315	WESB	286- 1
SF5	SET	286- 33
SF5A11	TOSJ	419- 51
SF5AN6	♦WESB	286- 42
SF5AN12	WESB	286- 43
SF5AR12	WESB	286- 44
SF5B11	TOSJ	425- 89
SF5C11	TOSJ	430- 90
SF5CN1	♦WESB	286- 45
SF5D11	TOSJ	435- 7
SF5E11	TOSJ	440-110
SF5F11	TOSJ	443- 80
SF5G11	TOSJ	451- 3
SF5GR315	WESB	286- 61
SF5H11	TOSJ	458- 13
SF5HR315	WESB	286- 62
SF5J11	TOSJ	464- 23
SF5Z11	TOSJ	415- 23
SF6	SET	286- 92
SF6AN6	♦WESB	287- 1
SF6AN12	WESB	287- 2
SF6AR12	WESB	287- 3
SF6GR315	WESB	287- 59
SF6HR315	WESB	287- 60
SF7GR315	WESB	287- 61
SF7HR315	WESB	287- 62
SF8	SET	288- 13
SF8GR315	WESB	288- 3

TYPE No.	MFRS	Pg&Line
SF8HR315	WESB	288- 4
SF9GR315	WESB	288- 15
SF9HR315	WESB	288- 16
SF10	SET	288- 44
SF10A11	TOSJ	419-106
SF10B11	TOSJ	426- 89
SF10C11	TOSJ	430- 99
SF10D11	TOSJ	436- 15
SF10E11	TOSJ	441- 8
SF10F11	TOSJ	444- 48
SF10G11	TOSJ	452- 8
SF10GR315	WESB	288- 61
SF10H11	TOSJ	458- 92
SF10HR315	WESB	288- 62
SF10J11	TOSJ	465- 21
SF10L11	TOSJ	475- 7
SF10N11	TOSJ	482- 39
SF10Z11	TOSJ	415- 36
SF11GR315	WESB	288- 69
SF11HR315	WESB	288- 70
SF12GR315	WESB	288- 79
SF12HR315	WESB	288- 80
SF16A11	TOSJ	420- 38
SF16B11	TOSJ	427- 51
SF16C11	TOSJ	431- 3
SF16D11	TOSJ	436- 91
SF16E11	TOSJ	441- 23
SF16F11	TOSJ	444-106
SF16G11	TOSJ	452- 87
SF16H11	TOSJ	459- 48
SF16J11	TOSJ	465- 99
SF16L11	TOSJ	475- 60
SF16N11	TOSJ	482- 62
SF16R11	TOSJ	490- 67
SF16Z11	TOSJ	415- 59
SF30R11	TOSJ	490- 77
SF50D11	TOSJ	438- 1
SF50G11	TOSJ	454- 15
SF50J11	♦TOSJ	467- 37
SF50R11	TOSJ	490- 88
SF80G11	TOSJ	455- 4
SF80J11	TOSJ	468- 68
SF80L11	TOSJ	477- 68
SF80N11	TOSJ	484- 26
SF80R11	TOSJ	491- 25
SF80U11	TOSJ	493- 74
SF150G11	TOSJ	455- 84
SF150J11	TOSJ	469- 48
SF150L11	TOSJ	478- 39
SF150N11	TOSJ	484- 84
SF150R11	TOSJ	491- 44
SF150U11	TOSJ	493-101
SF300G11	TOSJ	456- 39
SF300J11	TOSJ	470- 19
SF300L11	TOSJ	479- 2
SF300N11	TOSJ	485- 44
SF300R11	TOSJ	491- 74
SF300U11	TOSJ	494- 20
SF500EX22	TOSJ	495- 14
SF500U22	TOSJ	494- 27
SF500Y22	TOSJ	494-109
SF800L21	TOSJ	479- 39
SF800N21	TOSJ	485- 76
SF800R21	TOSJ	491- 85
SFD2-322	♦ESMF	533- 86
	MISI	
SFD2-324	♦ESMF	531- 9
	MISI	
SFD2-326	♦ESMF	528- 10
	MISI	
SFD2-328	♦ESMF	527- 30
	MISI	
SFD2-400E,F,G,H		520- 26
	ESMF	MISI
SFD2-401E,F,G,H		520- 27
	♦ESMF	MISI
SFD2-401K	♦ESMF	520- 28
	MISI	
SFD2-402E,F,G,H		520- 29
	♦ESMF	MISI
SFD2-410E,F,G,H		524- 65
	ESMF	MISI
SFD2-411E,F,G,H		524- 66
	♦ESMF	MISI
SFD2-412E,F,G,H		524- 67
	♦ESMF	MISI
SFD2-420C,D,E,F		528- 11
	ESMF	MISI
SFD2-421C,D,E,F		528- 12
	♦ESMF	MISI
SFD2-421G	♦ESMF	528- 13
	MISI	
SFD2-422C,D,E,F		528- 14
	♦ESMF	MISI
SFD2-422G	♦ESMF	528- 15
	MISI	
SFD2-423C,D,E,F		528- 16
	♦ESMF	MISI
SFD2-430A,B,C,D		531- 10
	ESMF	MISI
SFD2-431A,B,C,D		531- 11
	ESMF	MISI
SFD2-432A,B,C,D		531- 12
	♦ESMF	MISI
SFD2-433A,B,C,D		531- 13
	♦ESMF	MISI
SFD2-440A,B	ESMF	534- 95
	MISI	
SFD2-441A,B	ESMF	534- 96
	MISI	
SFD2-442A,B	♦ESMF	534- 97
	MISI	
SFD2-442C	♦ESMF	534- 98
	MISI	

TYPE No.	MFRS	Pg&Line
SFD2-443A,B	♦ESMF	534- 99
	MISI	
SFD2-443C	♦ESMF	534-100
	MISI	
SFD2-471	♦ESMF	265- 60
	MISI	
SFD2-472	♦ESMF	267- 19
	MISI	
SFD2-473	♦ESMF	268- 91
	MISI	
SFD43	♦ESMF	267- 64
	MISI	
SFD83	ESMF	267- 65
	MISI	
SFD86	♦ESMF	281- 16
	MISI	
SFD88	ESMF	283- 75
	MISI	
SFD88A	ESMF	283- 76
	MISI	
SFD89	ESMF	283- 77
	MISI	
SFD104	ESMF	601- 34
	MISI	
SFD105	ESMF	267- 87
	MISI	
SFD106	ESMF	601- 35
	MISI	
SFD107	ESMF	246- 67
	MISI	
SFD108	♦ESMF	253- 87
	MISI	
SFD108A	ESMF	254- 69
	MISI	
SFD121	ESMF	265- 22
	MISI	
SFD122	ESMF	267- 94
	MISI	
SFD129B	ESMF	269- 77
	MISI	
SFD143	♦ESMF	274- 33
	MISI	
SFD164	♦ESMF	571- 58
	MISI	
SFD180	♦ESMF	250- 13
	MISI	
SFD181	♦ESMF	255- 84
	MISI	
SFD182	ESMF	277- 94
	MISI	
SFD183	♦ESMF	274- 34
	MISI	
SFD184	ESMF	250- 14
	MISI	
SFD185	ESMF	271- 72
	MISI	
SFD322	♦ESMF	533- 87
	MISI	
SFD324	♦ESMF	531- 14
	MISI	
SFD326	♦ESMF	528- 17
	MISI	
SFD328	♦ESMF	527- 31
	MISI	
SFD401G,H,K	♦ESMF	520- 30
	♦MISI	
SFD402E,G,H	♦ESMF	520- 31
	♦MISI	
SFD411E,G,H	♦ESMF	524- 68
	♦MISI	
SFD412E,G,H	♦ESMF	524- 69
	♦MISI	
SFD413A,B,C,D	ESMF	524- 70
	MISI	
SFD421D,F,G	♦ESMF	528- 18
	♦MISI	
SFD422D,E,G	♦ESMF	528- 19
	♦MISI	
SFD423C,E,F	♦ESMF	528- 20
	♦MISI	
SFD432B,C,D	♦ESMF	531- 15
	♦MISI	
SFD433B,C,D	♦ESMF	531- 16
	♦MISI	
SFD442A,B	♦ESMF	534-101
	MISI	
SFD442C	♦ESMF	534-102
	MISI	
SFD443A,B	♦ESMF	534-103
	MISI	
SFD443C	♦ESMF	534-104
	MISI	
SFD451A	ESMF	547- 20
	MISI	
SFD452A	ESMF	547- 21
	MISI	
SFD453A	ESMF	547- 22
	MISI	
SFD454A	ESMF	547- 23
	MISI	
SFD461	ESMF	555- 78
	MISI	
SFD462	ESMF	555- 79
	MISI	
SFD463	ESMF	555- 80
	MISI	
SFD464	ESMF	555- 81
	MISI	
SFD2310	ESMF	591- 58
	MISI	
SFD2314	ESMF	591- 59
	MISI	
SFD2315	ESMF	591- 60
	MISI	

TYPE No.	MFRS	Pg&Line
SFD2316	ESMF	591- 61
	MISI	
SFD2317	ESMF	591- 62
	MISI	
SFD2401FL,GL,HL		519- 32
	ESMF	MISI
SFD2402EL,FL,GL		519- 33
	ESMF	MISI
SFD2403EL,FL,GL		519- 34
	ESMF	MISI
SFD2404EL,FL,GL		519- 35
	ESMF	MISI
SFD4471	ESMF	266- 13
	MISI	
SFD4472	ESMF	269- 86
	MISI	
SFD4473	ESMF	274- 8
	MISI	
SFD7422F	ESMF	519- 36
	MISI	
SFD7432E	ESMF	519- 37
	MISI	
SFD7433C	ESMF	519- 38
	MISI	
SFD7443B	ESMF	519- 39
	MISI	
SFM10	♦SET	288- 18
SFM15	♦SET	288- 90
SFM20	♦SET	288-103
SFM25	♦SET	289- 17
SFM30	♦SET	289- 26
SFM40	♦SET	289- 50
SFM50	♦SET	289- 73
SFM60	♦SET	290- 4
SFM70	♦SET	290- 23
SFMS10K	♦SET	290- 77
SFMS15K	♦SET	291- 11
SFMS20K	♦SET	291- 36
SFMS30K	♦SET	291- 64
SFMS40K	♦SET	291- 78
SG5F	SAKJ	313- 80
SG105	TSAJ	299- 48
SG205	TSAJ	310- 10
SG211	TEC	274- 51
SG212	TEC	280- 90
SG213	TEC	281- 73
SG215	TEC	269- 84
SG216	TEC	276- 58
SG217	TEC	281- 49
SG218	TEC	283- 40
SG221	TEC	274- 57
SG222	TEC	280- 91
SG223	TEC	281- 74
SG225	TEC	269- 85
SG226	TEC	276- 59
SG227	TEC	281- 50
SG228	TEC	283- 41
SG305	TSAJ	320- 72
SG505	TSAJ	339- 35
SG805	TSAJ	359- 36
SG5000	TEC	277- 95
SG5100	TEC	270-108
SG5200	TEC	275- 66
SG5250	TEC	271- 1
SG5260	TEC	275- 67
SG5270	TEC	277- 96
SG5300	TEC	277- 97
SG5400	TEC	280-103
SG5800	TEC	267- 20
SG9150	♦TEC	267- 78
SG9600	♦TEC	271- 32
SGD040A	♦EGG	576- 56
SGD040B	♦EGG	576- 57
SGD100A	♦EGG	576- 58
SGD444	EGG	576- 59
SGD444-2	EGG	576- 60
SGD444-4	EGG	576- 61
SGR100	TEC	301- 39
SH1	SAKJ	328- 25
SH1A	SAKJ	345- 90
SH1B	SAKJ	359- 8
SH1C	SAKJ	369- 51
SH1D	SAKJ	377- 57
SH1E	SAKJ	382- 5
SH4D1	GELC	301- 9
SH4D2	GELC	312- 5
SH4D3	GELC	321-102
SH4D4	GELC	330- 95
SH4D05	GELC	294- 29
SH4D5	GELC	340- 76
SH4D6	GELC	348- 14
SH4D8	GELC	360-105
SH5A	NECJ	512- 7
SH5J11	TOSJ	464- 32
SH6K	SAKJ	400- 76
SH8K	SAKJ	403- 39
SH10K	SAKJ	405- 51
SH12K	SAKJ	407- 4
SH16J11	TOSJ	465-105
SH50D11	TOSJ	438- 2
SH50F11	TOSJ	446- 4
SH50G11	TOSJ	454- 16
SH50H11	TOSJ	460- 48
SH50J11	TOSJ	467- 38
SH50L11	TOSJ	476- 69
SH80D11	TOSJ	438- 90
SH80F11	TOSJ	446- 81
SH80G11	TOSJ	455- 5
SH80H11	TOSJ	461- 33
SH80J11	TOSJ	468- 69
SH80L11	TOSJ	477- 67
SH80U12A	TOSJ	493- 75
SH150D11	TOSJ	439- 57
SH150F11	TOSJ	447- 17

TYPE No.	MFRS	Pg&Line
SH150G11	TOSJ	455- 85
SH150H11	TOSJ	461- 79
SH150J11	TOSJ	469- 49
SH250R11	TOSJ	491- 63
SH300D11	TOSJ	440- 6
SH300F11	TOSJ	447- 77
SH300G11	TOSJ	456- 40
SH300H11	TOSJ	462- 31
SH300J11	TOSJ	470- 20
SH300L11	TOSJ	478-108
SH400L21	TOSJ	479- 31
SH400N21	TOSJ	485- 68
SH400R21	TOSJ	491- 83
SH400U23	TOSJ	494- 26
Si250P12K38	♦ASEA	381- 12
Si250P14K38	♦ASEA	383- 83
Si250P16K38	♦ASEA	387- 57
Si250P18K38	♦ASEA	388-101
Si250P20K38	♦ASEA	390- 94
Si300P16K44	♦ASEA	387- 63
Si300P18K44	♦ASEA	388-107
Si300P20K44	♦ASEA	390-100
Si300P22K44	♦ASEA	391- 47
Si300P24K44	♦ASEA	392- 8
Si300P26K44	♦ASEA	393- 4
Si300P28K44	♦ASEA	393- 49
Si300P30K44	♦ASEA	394-108
SiB300P10K3 5♦	ASEA	376- 12
SiB300P12K3 5♦	ASEA	381- 11
SiB300P14K3 5♦	ASEA	383- 82
SiB300P16K3 5♦	ASEA	387- 56
SiB300P18K3 5♦	ASEA	388-100
SiB300P20K3 5♦	ASEA	390- 93
SiD01E	AEGG	324- 12
SiD01K	AEGG	367- 75
SiD01L	AEGG	351- 14
SiD01N	AEGG	379- 31
SiD02E	AEGG	324- 21
SiD02K	AEGG	367- 76
SiD02L	AEGG	351- 27
SiD02N	AEGG	379- 32
SiD03E	AEGG	324- 48
SiD03K	AEGG	367- 83
SiD03L	AEGG	351- 66
SiD03N	AEGG	379- 51
SiD300P16K4 4♦	ASEA	387- 55
SiD300P18K4 4♦	ASEA	388- 99
SiD300P20K4 4♦	ASEA	390- 92
SiD300P22K4 4♦	ASEA	391- 41
SiD300P24K4 4♦	ASEA	392- 5
SiD300P26K4 4♦	ASEA	393- 1
SiD300P28K4 4♦	ASEA	393- 47
SiD300P30K4 4♦	ASEA	394-107
SiD300P60K6 2♦	ASEA	401- 76
SiD500P40K6 2♦	ASEA	397- 74
SiD500P42K6 2♦	ASEA	397- 94
SiD500P44K6 2♦	ASEA	398- 1
SiD500P46K6 2♦	ASEA	398- 55
SiD500P48K6 2♦	ASEA	398- 88
SiD500P50K6 2♦	ASEA	400- 30
SiD500P52K6 2♦	ASEA	400- 31
SiD500P54K6 2♦	ASEA	400- 33
SiD500P56K6 2♦	ASEA	400- 63
SiD500P58K6 2♦	ASEA	400- 64
SiDA0.5K	AEGG	349- 74
SiDA0.5N	AEGG	362- 24
SiDA0.5P	AEGG	372- 48
SiDA02K	AEGG	351- 26
SiDA02N	AEGG	363- 71
SiDA02P	AEGG	373- 57
SiG300P10K3 5♦	ASEA	376- 18
SiG300P12K3 5♦	ASEA	381- 18
SiG300P14K3 5♦	ASEA	383- 89
SiG300P16K3 5♦	ASEA	387- 64
SiG300P18K3 5♦	ASEA	388-108
SI1	SCN	301- 92
	♦SET	
SI1A	SCN	302- 58
SI2	SCN	312- 90
	♦SET	
SI2A	SCN	313- 64
SI3	SCN	322- 53
SI3A	SCN	323- 1
SI4	SCN	331- 76
	♦SET	
SI4A	SCN	332- 50
SI05	SCN	294- 88
	♦SET	
SI05A	SCN	295- 32
SI5	SCN	341- 20
SI5A	SCN	341- 74
SI6	SCN	348-101
	♦SET	
SI6A	SCN	349- 70
SI8	SCN	361- 67
SI8A	SCN	362- 21
SI10	SCN	371- 95
SI10A	SCN	372- 45
SI50E	SCN	294- 46
SI100E	SCN	301- 40
SI200E	SCN	312- 40
SI300E	SCN	322- 9
SI400E	SCN	331- 21
SI500E	SCN	340- 89
SI600E	SCN	348- 42
SI800E	SCN	361- 17
SI1000E	SCN	371- 52
SIM2	♦MULB	514- 88
SIM3	MULB	514- 89
SIM5	♦MULB	514- 90
SIM6	MULB	514- 91
SIM8	MULB	516- 42
SIM9	MULB	516- 43
SJ053E,K	AEIL	295-105

Δ-Registered with JEDEC by this manufacturer

♦-Copy of mfr's data sheet may be ordered from D.A.T.A.

1. TYPE No. CROSS INDEX

IN TYPE NUMBER SEQUENCE

TYPE No.	MFRS	Pg&Line	TYPE No.	MFRS	Pg&Line	TYPE No.	MFRS	Pg&Line	TYPE No.	MFRS	Pg&Line	TYPE No.	MFRS	Pg&Line
SJ053F	AEIL	295 - 42	SKT45-06BS	♦SEKG	466 - 56	SKT70-14BX	♦SEKG	492 - 7	SKT110-08CT	♦SEKG	477 - 38	SKT170-02CY	♦SEKG	439 - 11
SJ054E,K	AEIL	296 - 41	SKT45-06BT	♦SEKG	466 - 57	SKT70-14C	♦SEKG	492 - 8	SKT110-08CV	♦SEKG	477 - 39	SKT170-02DV	♦SEKG	439 - 12
SJ054F	AEIL	295 - 92	SKT45-06CS	♦SEKG	466 - 58	SKT70-14CX	♦SEKG	492 - 9	SKT110-08DT	♦SEKG	477 - 40	SKT170-02DY	♦SEKG	439 - 13
SJ103E,K	AEIL	303 - 54	SKT45-06CT	♦SEKG	466 - 59	SKT70-14D	♦SEKG	492 - 10	SKT110-08DV	♦SEKG	477 - 41	SKT170-02EY	♦SEKG	439 - 14
SJ103F	AEIL	302 - 74	SKT45-06DS	♦SEKG	466 - 60	SKT70-14DX	♦SEKG	492 - 11	SKT110-08EV	♦SEKG	477 - 42	SKT170-04AY	♦SEKG	455 - 31
SJ103H	AEIL	307 - 33	SKT45-06DT	♦SEKG	466 - 61	SKT70-14E	♦SEKG	492 - 12	SKT110-10A	♦SEKG	483-106	SKT170-04BV	♦SEKG	455 - 32
SJ104E,K	AEIL	304 - 3	SKT45-06ET	♦SEKG	466 - 62	SKT70-16A	♦SEKG	493 - 56	SKT110-10B	♦SEKG	483-107	SKT170-04BY	♦SEKG	455 - 33
SJ104F	AEIL	303 - 35	SKT45-08AT	♦SEKG	475-106	SKT70-16B	♦SEKG	493 - 57	SKT110-10BY	♦SEKG	483-108	SKT170-04CV	♦SEKG	455 - 34
SJ203E,K	AEIL	314 - 68	SKT45-08BS	♦SEKG	475-107	SKT70-16C	♦SEKG	493 - 58	SKT110-10C	♦SEKG	483-109	SKT170-04CY	♦SEKG	455 - 35
SJ203F	AEIL	313 - 81	SKT45-08BT	♦SEKG	475-108	SKT70-16D	♦SEKG	493 - 59	SKT110-10CY	♦SEKG	483-110	SKT170-04DV	♦SEKG	455 - 36
SJ203H	AEIL	319 - 29	SKT45-08CS	♦SEKG	475-109	SKT70-16E	♦SEKG	493 - 60	SKT110-10D	♦SEKG	484 - 1	SKT170-04DY	♦SEKG	455 - 37
SJ204E,K	AEIL	315 - 25	SKT45-08CT	♦SEKG	475-110	SKT71-02A	♦SEKG	437-103	SKT110-10DY	♦SEKG	484 - 2	SKT170-04EY	♦SEKG	455 - 38
SJ204F	AEIL	314 - 44	SKT45-08DS	♦SEKG	476 - 1	SKT71-02B	♦SEKG	437-104	SKT110-10E	♦SEKG	484 - 3	SKT170-06AY	♦SEKG	468 - 99
SJ303E,K	AEIL	325 - 53	SKT45-08DT	♦SEKG	476 - 2	SKT71-02C	♦SEKG	437-105	SKT110-12A	♦SEKG	488-104	SKT170-06BV	♦SEKG	468-100
SJ303F	AEIL	323 - 13	SKT45-08ET	♦SEKG	476 - 3	SKT71-02D	♦SEKG	437-106	SKT110-12B	♦SEKG	488-105	SKT170-06BY	♦SEKG	468-101
SJ304E,K	AEIL	324 - 29	SKT45-10A	♦SEKG	482 - 99	SKT71-02E	♦SEKG	437-107	SKT110-12BY	♦SEKG	488-106	SKT170-06CV	♦SEKG	468-102
SJ304F	AEIL	323 - 69	SKT45-10B	♦SEKG	482-100	SKT71-04A	♦SEKG	454 - 6	SKT110-12C	♦SEKG	488-107	SKT170-06CY	♦SEKG	468-103
SJ403E,K	AEIL	336 - 25	SKT45-10BX	♦SEKG	482-101	SKT71-04B	♦SEKG	454 - 7	SKT110-12CY	♦SEKG	488-108	SKT170-06DV	♦SEKG	468-104
SJ403F	AEIL	332 - 67	SKT45-10C	♦SEKG	482-102	SKT71-04C	♦SEKG	454 - 8	SKT110-12D	♦SEKG	488-109	SKT170-06DY	♦SEKG	468-105
SJ403H	AEIL	340 - 61	SKT45-10CX	♦SEKG	482-103	SKT71-04D	♦SEKG	454 - 9	SKT110-12DY	♦SEKG	488-110	SKT170-06EY	♦SEKG	468-106
SJ404E,K	AEIL	334 - 25	SKT45-10D	♦SEKG	482-104	SKT71-04E	♦SEKG	454 - 10	SKT110-12E	♦SEKG	489 - 1	SKT170-08AY	♦SEKG	477 - 95
SJ404F	AEIL	333 - 37	SKT45-10DX	♦SEKG	482-105	SKT71-06A	♦SEKG	467 - 28	SKT110-14A	♦SEKG	492 - 22	SKT170-08BV	♦SEKG	477 - 96
SJ603E,K	AEIL	350 - 77	SKT45-10E	♦SEKG	482-106	SKT71-06B	♦SEKG	467 - 29	SKT110-14B	♦SEKG	492 - 23	SKT170-08BY	♦SEKG	477 - 97
SJ603F	AEIL	349 - 83	SKT45-12A	♦SEKG	488 - 13	SKT71-06C	♦SEKG	467 - 30	SKT110-14BY	♦SEKG	492 - 24	SKT170-08CV	♦SEKG	477 - 98
SJ603H	AEIL	358-101	SKT45-12B	♦SEKG	488 - 14	SKT71-06D	♦SEKG	467 - 31	SKT110-14C	♦SEKG	492 - 25	SKT170-08CY	♦SEKG	477 - 99
SJ604E,K	AEIL	351 - 37	SKT45-12BX	♦SEKG	488 - 15	SKT71-06E	♦SEKG	467 - 32	SKT110-14CY	♦SEKG	492 - 26	SKT170-08DV	♦SEKG	477-100
SJ604F	AEIL	350 - 56	SKT45-12C	♦SEKG	488 - 16	SKT71-08A	♦SEKG	476 - 59	SKT110-14D	♦SEKG	492 - 27	SKT170-08DY	♦SEKG	477-101
SJ803E,K	AEIL	365 - 14	SKT45-12CX	♦SEKG	488 - 17	SKT71-08B	♦SEKG	476 - 60	SKT110-14DY	♦SEKG	492 - 28	SKT170-08EY	♦SEKG	477-102
SJ803F	AEIL	362 - 36	SKT45-12D	♦SEKG	488 - 18	SKT71-08C	♦SEKG	476 - 61	SKT110-14E	♦SEKG	492 - 29	SKT170-10A	♦SEKG	484 - 46
SJ803H	AEIL	371 - 2	SKT45-12DX	♦SEKG	488 - 19	SKT71-08D	♦SEKG	476 - 62	SKT110-16A	♦SEKG	493 - 69	SKT170-10B	♦SEKG	484 - 47
SJ1003E,K	AEIL	373 - 13	SKT45-12E	♦SEKG	488 - 20	SKT71-08E	♦SEKG	476 - 63	SKT110-16B	♦SEKG	493 - 70	SKT170-10BZ	♦SEKG	484 - 48
SJ1003F	AEIL	372 - 58	SKT45-14A	♦SEKG	491 - 98	SKT90-02AU	♦SEKG	438 - 19	SKT110-16C	♦SEKG	493 - 71	SKT170-10C	♦SEKG	484 - 49
SJ1003H	AEIL	378 - 31	SKT45-14B	♦SEKG	491 - 99	SKT90-02BU	♦SEKG	438 - 20	SKT110-16D	♦SEKG	493 - 72	SKT170-10CZ	♦SEKG	484 - 50
SJ1203E,K	AEIL	379 - 20	SKT45-14BX	♦SEKG	491-100	SKT90-02CU	♦SEKG	438 - 21	SKT110-16E	♦SEKG	493 - 73	SKT170-10D	♦SEKG	484 - 51
SJ1203F	AEIL	378-101	SKT45-14C	♦SEKG	491-101	SKT90-02DU	♦SEKG	438 - 22	SKT111-02A	♦SEKG	438 - 79	SKT170-10DZ	♦SEKG	484 - 52
SJ1203H	AEIL	382 - 20	SKT45-14CX	♦SEKG	491-102	SKT90-02EU	♦SEKG	438 - 23	SKT111-02B	♦SEKG	438 - 80	SKT170-10E	♦SEKG	484 - 53
SJ1403H	AEIL	386 - 27	SKT45-14D	♦SEKG	491-103	SKT90-04AU	♦SEKG	454 - 41	SKT111-02C	♦SEKG	438 - 81	SKT170-12A	♦SEKG	489 - 30
SK103K	AEIL	304 - 81	SKT45-14DX	♦SEKG	491-104	SKT90-04BU	♦SEKG	454 - 42	SKT111-02D	♦SEKG	438 - 82	SKT170-12B	♦SEKG	489 - 31
SK203K	AEIL	316 - 4	SKT45-14E	♦SEKG	491-105	SKT90-04CU	♦SEKG	454 - 43	SKT111-02E	♦SEKG	438 - 83	SKT170-12BZ	♦SEKG	489 - 32
SK403K	AEIL	335 - 11	SKT45-16A	♦SEKG	493 - 47	SKT90-04DU	♦SEKG	454 - 44	SKT111-04A	♦SEKG	454-102	SKT170-12C	♦SEKG	489 - 33
SK603K	AEIL	352 - 8	SKT45-16B	♦SEKG	493 - 48	SKT90-04EU	♦SEKG	454 - 45	SKT111-04B	♦SEKG	454-103	SKT170-12CZ	♦SEKG	489 - 34
SK803K	AEIL	364 - 42	SKT45-16C	♦SEKG	493 - 49	SKT90-06AU	♦SEKG	467 - 70	SKT111-04C	♦SEKG	454-104	SKT170-12D	♦SEKG	489 - 35
SK1003K	AEIL	374 - 14	SKT45-16D	♦SEKG	493 - 50	SKT90-06BU	♦SEKG	467 - 71	SKT111-04D	♦SEKG	454-105	SKT170-12DZ	♦SEKG	489 - 36
SK1203K	AEIL	379 - 61	SKT45-16E	♦SEKG	493 - 51	SKT90-06CU	♦SEKG	467 - 72	SKT111-04E	♦SEKG	454-106	SKT170-12E	♦SEKG	489 - 37
SK1403K	AEIL	382 - 58	SKT46-02A	♦SEKG	437 - 52	SKT90-06DU	♦SEKG	467 - 73	SKT111-06A	♦SEKG	468 - 54	SKT170-14A	♦SEKG	492 - 38
SKA1/10	♦SEKG	372 - 33	SKT46-02B	♦SEKG	437 - 53	SKT90-06EU	♦SEKG	467 - 74	SKT111-06B	♦SEKG	468 - 55	SKT170-14B	♦SEKG	492 - 39
SKA1/12	♦SEKG	381 - 39	SKT46-02C	♦SEKG	437 - 54	SKT90-08AU	♦SEKG	476 - 96	SKT111-06C	♦SEKG	468 - 56	SKT170-14BZ	♦SEKG	492 - 40
SKA2 5/10	♦SEKG	373 - 3	SKT46-02D	♦SEKG	437 - 55	SKT90-08BU	♦SEKG	476 - 97	SKT111-06D	♦SEKG	468 - 57	SKT170-14C	♦SEKG	492 - 41
SKA2 5/12	♦SEKG	381 - 45	SKT46-02E	♦SEKG	437 - 56	SKT90-08CU	♦SEKG	476 - 98	SKT111-06E	♦SEKG	468 - 58	SKT170-14CZ	♦SEKG	492 - 42
SKA5/10	♦SEKG	373 - 79	SKT46-04A	♦SEKG	453 - 57	SKT90-08DU	♦SEKG	476 - 99	SKT111-08A	♦SEKG	477 - 54	SKT170-14D	♦SEKG	492 - 43
SKA5/12	♦SEKG	381 - 50	SKT46-04B	♦SEKG	453 - 58	SKT90-08EU	♦SEKG	476-100	SKT111-08B	♦SEKG	477 - 55	SKT170-14DZ	♦SEKG	492 - 44
SKE1/02	♦SEKG	331 - 50	SKT46-04C	♦SEKG	453 - 59	SKT90-10A	♦SEKG	483 - 66	SKT111-08C	♦SEKG	477 - 56	SKT170-14E	♦SEKG	492 - 45
SKE1/06	♦SEKG	361 - 45	SKT46-04D	♦SEKG	453 - 60	SKT90-10B	♦SEKG	483 - 67	SKT111-08D	♦SEKG	477 - 57	SKT170-16A	♦SEKG	493 - 82
SKE1/10	♦SEKG	378 - 63	SKT46-04E	♦SEKG	453 - 61	SKT90-10C	♦SEKG	483 - 68	SKT111-08E	♦SEKG	477 - 58	SKT170-16B	♦SEKG	493 - 83
SKE1/12	♦SEKG	384 - 93	SKT46-06A	♦SEKG	466 - 66	SKT90-10D	♦SEKG	483 - 69	SKT140-02AV	♦SEKG	438 - 93	SKT170-16C	♦SEKG	493 - 84
SKEA1/10	SEKG	292 - 1	SKT46-06B	♦SEKG	466 - 67	SKT90-12A	♦SEKG	488 - 76	SKT140-02BV	♦SEKG	438 - 94	SKT170-16D	♦SEKG	493 - 85
SKEA1/12	SEKG	292 - 2	SKT46-06C	♦SEKG	466 - 68	SKT90-12B	♦SEKG	488 - 77	SKT140-02CV	♦SEKG	438 - 95	SKT170-16E	♦SEKG	493 - 86
SKN2 5/04	♦SEKG	332 - 65	SKT46-06D	♦SEKG	466 - 69	SKT90-12C	♦SEKG	488 - 78	SKT140-02DV	♦SEKG	438 - 96	SKT171-02A	♦SEKG	439 - 15
SKN2.5/08	♦SEKG	362 - 35	SKT46-06E	♦SEKG	466 - 70	SKT90-12D	♦SEKG	488 - 79	SKT140-02EV	♦SEKG	438 - 97	SKT171-02B	♦SEKG	439 - 16
SKN2.5/12	♦SEKG	378-100	SKT46-08A	♦SEKG	476 - 7	SKT90-14A	♦SEKG	492 - 17	SKT140-04AV	♦SEKG	455 - 8	SKT171-02C	♦SEKG	439 - 17
SKN2 5/16	♦SEKG	386 - 46	SKT46-08B	♦SEKG	476 - 8	SKT90-14B	♦SEKG	492 - 18	SKT140-04BV	♦SEKG	455 - 9	SKT171-02D	♦SEKG	439 - 18
SKN5/04	♦SEKG	333 - 50	SKT46-08C	♦SEKG	476 - 9	SKT90-14C	♦SEKG	492 - 19	SKT140-04CV	♦SEKG	455 - 10	SKT171-02E	♦SEKG	439 - 19
SKN5/08	♦SEKG	363 - 11	SKT46-08D	♦SEKG	476 - 10	SKT90-14D	♦SEKG	492 - 20	SKT140-04DV	♦SEKG	455 - 11	SKT171-04A	♦SEKG	455 - 39
SKN5/12	♦SEKG	379 - 19	SKT46-08E	♦SEKG	476 - 11	SKT90-16A	♦SEKG	493 - 63	SKT140-04EV	♦SEKG	455 - 12	SKT171-04B	♦SEKG	455 - 40
SKN5/16	♦SEKG	386 - 59	SKT70-02AU	♦SEKG	437 - 93	SKT90-16B	♦SEKG	493 - 64	SKT140-06AV	♦SEKG	468 - 72	SKT171-04C	♦SEKG	455 - 41
SKN12/04	♦SEKG	334 - 93	SKT70-02BT	♦SEKG	437 - 94	SKT90-16C	♦SEKG	493 - 65	SKT140-06BV	♦SEKG	468 - 73	SKT171-04D	♦SEKG	455 - 42
SKN12/08	♦SEKG	364 - 29	SKT70-02BU	♦SEKG	437 - 95	SKT90-16D	♦SEKG	493 - 66	SKT140-06CV	♦SEKG	468 - 74	SKT171-04E	♦SEKG	455 - 43
SKN12/12	♦SEKG	379 - 57	SKT70-02CT	♦SEKG	437 - 96	SKT91-02A	♦SEKG	438 - 24	SKT140-06DV	♦SEKG	468 - 75	SKT171-06A	♦SEKG	468-107
SKN12/16	♦SEKG	386 - 69	SKT70-02CU	♦SEKG	437 - 97	SKT91-02B	♦SEKG	438 - 25	SKT140-06EV	♦SEKG	468 - 76	SKT171-06B	♦SEKG	468-108
SKN20/04	♦SEKG	335 - 32	SKT70-02DT	♦SEKG	437 - 98	SKT91-02C	♦SEKG	438 - 26	SKT140-08AV	♦SEKG	477 - 71	SKT171-06C	♦SEKG	468-109
SKN20/08	♦SEKG	364 - 57	SKT70-02DU	♦SEKG	437 - 99	SKT91-02D	♦SEKG	438 - 27	SKT140-08BV	♦SEKG	477 - 72	SKT171-06D	♦SEKG	468-110
SKN20/12	♦SEKG	379 - 68	SKT70-02EU	♦SEKG	437-100	SKT91-02E	♦SEKG	438 - 28	SKT140-08CV	♦SEKG	477 - 73	SKT171-06E	♦SEKG	469 - 1
SKN20/16	♦SEKG	386 - 76	SKT70-04AU	♦SEKG	453-106	SKT91-04A	♦SEKG	454 - 46	SKT140-08DV	♦SEKG	477 - 74	SKT171-08A	♦SEKG	477-103
SKN45/04	♦SEKG	336 - 21	SKT70-04BT	♦SEKG	453-107	SKT91-04B	♦SEKG	454 - 47	SKT140-08EV	♦SEKG	477 - 75	SKT171-08B	♦SEKG	477-104
SKN45/08	♦SEKG	365 - 11	SKT70-04BU	♦SEKG	453-108	SKT91-04C	♦SEKG	454 - 48	SKT140-10A	♦SEKG	484 - 29	SKT171-08C	♦SEKG	477-105
SKN45/12	♦SEKG	379 - 98	SKT70-04CT	♦SEKG	453-109	SKT91-04D	♦SEKG	454 - 49	SKT140-10B	♦SEKG	484 - 30	SKT171-08D	♦SEKG	477-106
SKN45/16	♦SEKG	386 - 85	SKT70-04CU	♦SEKG	453-110	SKT91-04E	♦SEKG	454 - 50	SKT140-10C	♦SEKG	484 - 31	SKT171-08E	♦SEKG	477-107
SKN100/04	♦SEKG	336 - 81	SKT70-04DT	♦SEKG	454 - 1	SKT91-06A	♦SEKG	467 - 75	SKT140-10D	♦SEKG	484 - 32	SKT220-02AY	♦SEKG	439 - 41
SKN100/08	♦SEKG	365 - 56	SKT70-04DU	♦SEKG	454 - 2	SKT91-06B	♦SEKG	467 - 76	SKT140-12A	♦SEKG	489 - 17	SKT220-02BY	♦SEKG	439 - 42
SKN100/12	♦SEKG	380 - 8	SKT70-04EU	♦SEKG	454 - 3	SKT91-06C	♦SEKG	467 - 77	SKT140-12B	♦SEKG	489 - 18	SKT220-02CY	♦SEKG	439 - 43
SKN100/16	♦SEKG	386 - 90	SKT70-06AU	♦SEKG	467 - 18	SKT91-06D	♦SEKG	467 - 78	SKT140-12C	♦SEKG	489 - 19	SKT220-02DY	♦SEKG	439 - 44
SKN130/04	♦SEKG	336-102	SKT70-06BT	♦SEKG	467 - 19	SKT91-06E	♦SEKG	467 - 79	SKT140-12D	♦SEKG	489 - 20	SKT220-02EY	♦SEKG	439 - 45
SKN130/08	♦SEKG	365 - 73	SKT70-06BU	♦SEKG	467 - 20	SKT91-08A	♦SEKG	476-101	SKT140-14A	♦SEKG	492 - 33	SKT220-04AY	♦SEKG	455 - 68
SKN130/12	♦SEKG	380 - 21	SKT70-06CT	♦SEKG	467 - 21	SKT91-08B	♦SEKG	476-102	SKT140-14B	♦SEKG	492 - 34	SKT220-04BY	♦SEKG	455 - 69
SKN130/16	♦SEKG	386 - 97	SKT70-06CU	♦SEKG	467 - 22	SKT91-08C	♦SEKG	476-103	SKT140-14C	♦SEKG	492 - 35	SKT220-04CY	♦SEKG	455 - 70
SKN170/04	♦SEKG	337 - 19	SKT70-06DT	♦SEKG	467 - 23	SKT91-08D	♦SEKG	476-104	SKT140-14D	♦SEKG	492 - 36	SKT220-04DY	♦SEKG	455 - 71
SKN170/08	♦SEKG	365 - 96	SKT70-06DU	♦SEKG	467 - 24	SKT91-08E	♦SEKG	476-105	SKT140-16A	♦SEKG	493 - 76	SKT220-04EY	♦SEKG	455 - 72
SKN170/12	♦SEKG	380 - 36	SKT70-06EU	♦SEKG	467 - 25	SKT110-02AV	♦SEKG	438 - 62	SKT140-16B	♦SEKG	493 - 77	SKT220-06AY	♦SEKG	469 - 30
SKN170/16	♦SEKG	386-104	SKT70-08AU	♦SEKG	476 - 49	SKT110-02BT	♦SEKG	438 - 63	SKT140-16C	♦SEKG	493 - 78	SKT220-06BY	♦SEKG	469 - 31
SKN240/04	♦SEKG	337 - 45	SKT70-08BT	♦SEKG	476 - 50	SKT110-02BV	♦SEKG	438 - 64	SKT140-16D	♦SEKG	493 - 79	SKT220-06CY	♦SEKG	469 - 32
SKN240/08	♦SEKG	366 - 3	SKT70-08BU	♦SEKG	476 - 51	SKT110-02CT	♦SEKG	438 - 65	SKT141-02A	♦SEKG	438 - 98	SKT220-06DY	♦SEKG	469 - 33
SKN240/12	♦SEKG	380 - 48	SKT70-08CT	♦SEKG	476 - 52	SKT110-02CV	♦SEKG	438 - 66	SKT141-02B	♦SEKG	438 - 99	SKT220-06EY	♦SEKG	469 - 34
SKN240/16	♦SEKG	387 - 1	SKT70-08CU	♦SEKG	476 - 53	SKT110-02DT	♦SEKG	438 - 67	SKT141-02C	♦SEKG	438-100	SKT220-08AY	♦SEKG	478 - 22
SKN320/04	♦SEKG	337 - 98	SKT70-08DT	♦SEKG	476 - 54	SKT110-02DV	♦SEKG	438 - 68	SKT141-02D	♦SEKG	438-101	SKT220-08BY	♦SEKG	478 - 23
SKN320/08	♦SEKG	366 - 45	SKT70-08DU	♦SEKG	476 - 55	SKT110-02EV	♦SEKG	438 - 69	SKT141-02E	♦SEKG	438-102	SKT220-08CY	♦SEKG	478 - 24
SKN320/12	♦SEKG	380 - 86	SKT70-08EU	♦SEKG	476 - 56	SKT110-04AV	♦SEKG	454 - 85	SKT141-04A	♦SEKG	455 - 13	SKT220-08DY	♦SEKG	478 - 25
SKN320/16	♦SEKG	387 - 29	SKT70-10A	♦SEKG	483 - 31	SKT110-04BT	♦SEKG	454 - 86	SKT141-04B	♦SEKG	455 - 14	SKT220-08EY	♦SEKG	478 - 26
SKT45-02AT	♦SEKG	437 - 41	SKT70-10B	♦SEKG	483 - 32	SKT110-04BV	♦SEKG	454 - 87	SKT141-04C	♦SEKG	455 - 15	SKT220-10A	♦SEKG	484 - 75
SKT45-02BS	♦SEKG	437 - 42	SKT70-10BX	♦SEKG	483 - 33	SKT110-04CT	♦SEKG	454 - 88	SKT141-04D	♦SEKG	455 - 16	SKT220-10B	♦SEKG	484 - 76
SKT45-02BT	♦SEKG	437 - 43	SKT70-10C	♦SEKG	483 - 34	SKT110-04CV	♦SEKG	454 - 89	SKT141-04E	♦SEKG	455 - 17	SKT220-10C	♦SEKG	484 - 77
SKT45-02CS	♦SEKG	437 - 44	SKT70-10CX	♦SEKG	483 - 35	SKT110-04DT	♦SEKG	454 - 90	SKT141-06A	♦SEKG	468 - 77	SKT220-10D	♦SEKG	484 - 78
SKT45-02CT	♦SEKG	437 - 45	SKT70-10D	♦SEKG	483 - 36	SKT110-04DV	♦SEKG	454 - 91	SKT141-06B	♦SEKG	468 - 78	SKT220-12A	♦SEKG	489 - 56
SKT45-02DS	♦SEKG	437 - 46	SKT70-10DX	♦SEKG	483 - 37	SKT110-04EV	♦SEKG	454 - 92	SKT141-06C	♦SEKG	468 - 79	SKT220-12B	♦SEKG	489 - 57
SKT45-02DT	♦SEKG	437 - 47	SKT70-10E	♦SEKG	483 - 38	SKT110-06AV	♦SEKG	468 - 32	SKT141-06D	♦SEKG	468 - 80	SKT220-12C	♦SEKG	489 - 58
SKT45-02ET	♦SEKG	437 - 48	SKT70-12A	♦SEKG	488 - 44	SKT110-06BT	♦SEKG	468 - 33	SKT141-06E	♦SEKG	468 - 81	SKT220-12D	♦SEKG	489 - 59
SKT45-04AT	♦SEKG	453 - 46	SKT70-12B	♦SEKG	488 - 45	SKT110-06BV	♦SEKG	468 - 34	SKT141-08A	♦SEKG	477 - 76	SKT220-14A	♦SEKG	492 - 57
SKT45-04BS	♦SEKG	453 - 47	SKT70-12BX	♦SEKG	488 - 46	SKT110-06CT	♦SEKG	468 - 35	SKT141-08B	♦SEKG	477 - 77	SKT220-14B	♦SEKG	492 - 58
SKT45-04BT	♦SEKG	453 - 48	SKT70-12C	♦SEKG	488 - 47	SKT110-06CV	♦SEKG	468 - 36	SKT141-08C	♦SEKG	477 - 78	SKT220-14C	♦SEKG	492 - 59
SKT45-04CS	♦SEKG	453 - 49	SKT70-12CX	♦SEKG	488 - 48	SKT110-06DT	♦SEKG	468 - 37	SKT141-08D	♦SEKG	477 - 79	SKT220-14D	♦SEKG	492 - 60
SKT45-04CT	♦SEKG	453 - 50	SKT70-12D	♦SEKG	488 - 49	SKT110-06DV	♦SEKG	468 - 38	SKT141-08E	♦SEKG	477 - 80	SKT220-16A	♦SEKG	493 - 95
SKT45-04DS	♦SEKG	453 - 51	SKT70-12DX	♦SEKG	488 - 50	SKT110-06EV	♦SEKG	468 - 39	SKT170-02AY	♦SEKG	439 - 7	SKT220-16B	♦SEKG	493 - 96
SKT45-04DT	♦SEKG	453 - 52	SKT70-12E	♦SEKG	488 - 51	SKT110-08AV	♦SEKG	477 - 35	SKT170-02BV	♦SEKG	439 - 8	SKT220-16C	♦SEKG	493 - 97
SKT45-04ET	♦SEKG	453 - 53	SKT70-14A	♦SEKG	492 - 5	SKT110-08BT	♦SEKG	477 - 36	SKT170-02BY	♦SEKG	439 - 9	SKT220-16D	♦SEKG	493 - 98
SKT45-06AT	♦SEKG	466 - 55	SKT70-14B	♦SEKG	492 - 6	SKT110-08BV	♦SEKG	477 - 37	SKT170-02CV	♦SEKG	439 - 10	SKT221-02A	♦SEKG	439 - 46

Δ-Registered with JEDEC by this manufacturer

♦-Copy of mfr's data sheet may be ordered from D.A.T.A.

1. TYPE No. CROSS INDEX

IN TYPE NUMBER SEQUENCE

TYPE No.	MFRS	Pg&Line
SKT221-02B	♦SEKG	439- 47
SKT221-02C	♦SEKG	439- 48
SKT221-02D	♦SEKG	439- 49
SKT221-02E	♦SEKG	439- 50
SKT221-04A	♦SEKG	455- 73
SKT221-04B	♦SEKG	455- 74
SKT221-04C	♦SEKG	455- 75
SKT221-04D	♦SEKG	455- 76
SKT221-04E	♦SEKG	455- 77
SKT221-06A	♦SEKG	469- 35
SKT221-06B	♦SEKG	469- 36
SKT221-06C	♦SEKG	469- 37
SKT221-06D	♦SEKG	469- 38
SKT221-06E	♦SEKG	469- 39
SKT221-08A	♦SEKG	478- 27
SKT221-08B	♦SEKG	478- 28
SKT221-08C	♦SEKG	478- 29
SKT221-08D	♦SEKG	478- 30
SKT221-08E	♦SEKG	478- 31
SKV1/2B3000/2700-1 2	SEKG	398- 43
SL3	SCN	323- 94
SL5	SCN	342- 41
SL8∅	♦SCO	403- 29
SL8#	SCN	363- 19
SL10∅	♦SCO	405- 35
SL10#	SCN	373- 17
SL15	♦SCO	408- 14
SL20	♦SCO	409- 99
SL25	♦SCO	411- 8
SL30	♦SCO	412- 9
SL45	♦SCO	412- 98
SL50	SCN	296- 50
SL100	SCN	304- 25
SL103A,K	AEIL	305- 69
SL103F	AEIL	302- 72
SL103M	AEIL	301- 98
SL200	SCN	315- 50
SL203A,K	AEIL	317- 7
SL203F	AEIL	313- 78
SL203M	AEIL	312- 97
SL300	SCN	324- 46
SL400	SCN	334- 50
SL403A,K	AEIL	336- 26
SL403F	AEIL	332- 64
SL403M	AEIL	331- 82
SL500	SCN	342- 98
SL600	SCN	351- 63
SL603A,K	AEIL	352-109
SL603F	AEIL	349- 82
SL603M	AEIL	348-106
SL800	SCN	364- 25
SL800X	SCN	363- 62
SL803A,K	AEIL	365- 15
SL803F	AEIL	362- 33
SL803M	AEIL	361- 72
SL1000	SCN	373-109
SL1000X	SCN	373- 49
SL1003A,K	AEIL	374- 72
SL1003F	AEIL	372- 56
SL1003M	AEIL	371-101
SL1203A,K	AEIL	379- 99
SL1203F	AEIL	378- 99
SL1203M	AEIL	378- 73
SLA01	SEN	369- 67
SLA02	SEN	389- 74
SLA02HC	SEN	390- 16
SLA02HF	SEN	389- 87
SLA03	SEN	394- 11
SLA03HC	SEN	394- 60
SLA03HF	SEN	394- 27
SLA04	SEN	396-105
SLA04HC	SEN	397- 41
SLA04HF	SEN	397- 11
SLA05	SEN	399- 54
SLA05HC	SEN	399-100
SLA05HF	SEN	399- 68
SLA06	SEN	401- 12
SLA08	SEN	403- 76
SLA010	SEN	405- 98
SLA11AB	SEN	294- 7
SLA11C	SEN	294- 8
SLA012	SEN	407- 21
SLA12	SEN	407- 22
SLA12AB	SEN	300- 87
SLA12C	SEN	300- 88
SLA13AB	SEN	311- 71
SLA13C	SEN	311- 72
SLA014	SEN	407- 94
SLA14	SEN	407- 95
SLA14AB	SEN	321- 85
SLA14C	SEN	321- 86
SLA15AB	SEN	330- 53
SLA15C	SEN	330- 54
SLA016	SEN	408-107
SLA16	SEN	408-108
SLA16AB	SEN	340- 56
SLA16C	SEN	340- 57
SLA17AB	SEN	347- 84
SLA17C	SEN	347- 85
SLA018	SEN	409- 54
SLA18	SEN	409- 55
SLA18AB	SEN	360- 69
SLA18C	SEN	360- 70
SLA19AB	SEN	370-109
SLA19C	SEN	370-110
SLA020	SEN	410- 13
SLA20AB	SEN	378- 28
SLA20C	SEN	378- 29
SLA21A	SEN	295- 18
SLA21B	SEN	295- 19
SLA21C	SEN	295- 20
SLA22A	SEN	302- 41
SLA22B	SEN	302- 42

TYPE No.	MFRS	Pg&Line
SLA22C	SEN	302- 43
SLA23A	SEN	313- 45
SLA23B	SEN	313- 46
SLA23C	SEN	313- 47
SLA24A	SEN	322-101
SLA24B	SEN	322-102
SLA24C	SEN	322-103
SLA25A	SEN	332- 32
SLA25B	SEN	332- 33
SLA25C	SEN	332- 34
SLA26A	SEN	341- 62
SLA26B	SEN	341- 63
SLA26C	SEN	341- 64
SLA27A	SEN	349- 53
SLA27B	SEN	349- 54
SLA27C	SEN	349- 55
SLA28A	SEN	362- 8
SLA28B	SEN	362- 9
SLA28C	SEN	362- 10
SLA29A	SEN	372- 34
SLA29B	SEN	372- 35
SLA29C	SEN	372- 36
SLA30A	SEN	378- 86
SLA30B	SEN	378- 87
SLA30C	SEN	378- 88
SLA31A	SEN	382- 32
SLA31B	SEN	382- 33
SLA31C	SEN	382- 34
SLA32A	SEN	386- 40
SLA32B	SEN	386- 41
SLA32C	SEN	386- 42
SLA33A	SEN	388- 35
SLA33B	SEN	388- 36
SLA33C	SEN	388- 37
SLA34A	SEN	390- 40
SLA34B	SEN	390- 41
SLA34C	SEN	390- 42
SLA50LCD	♦SEN	294- 47
SLA100LCD	♦SEN	301- 41
SLA200	♦SEN	314- 86
SLA200LCD	♦SEN	312- 41
SLA300	♦SEN	323-101
SLA400	♦SEN	333- 78
SLA400LCD	♦SEN	331- 22
SLA500	♦SEN	342- 48
SLA600	♦SEN	350- 91
SLA600LCD	♦SEN	348- 43
SLA700	♦SEN	356- 82
SLA800	♦SEN	363- 27
SLA800LCD	♦SEN	361- 18
SLA900	♦SEN	367- 56
SLA1000	♦SEN	373- 23
SLA1000LCD	♦SEN	371- 53
SLA1400A	SEN	382- 17
SLA1400B	SEN	382- 18
SLA1400C	SEN	382- 19
SLA1600A	SEN	386- 24
SLA1600B	SEN	386- 25
SLA1600C	SEN	386- 26
SLA1800A	SEN	388- 23
SLA1800B	SEN	388- 24
SLA1800C	SEN	388- 25
SLA2000A	SEN	390- 25
SLA2000B	SEN	390- 26
SLA2000C	SEN	390- 27
SLA5197	SEN	295- 75
SLA5197HF	SEN	272- 70
SLA5198	SEN	303- 6
SLA5198HF	SEN	279- 32
SLA5199	SEN	314- 15
SLA5199HF	SEN	282- 97
SLA5200	SEN	333- 8
SLA5200HF	SEN	285- 71
SLA5201	SEN	350- 26
SLA5201HF	SEN	287- 9
SLA5202	SEN	362- 84
SLA5202HF	SEN	287- 85
SLA5203	SEN	372- 91
SLA5203HF	SEN	288- 25
SLA5204	SEN	378-109
SLA5204HF	SEN	288- 71
SLA5205	SEN	382- 39
SLA5205HF	SEN	288- 86
SLD1	SOD	386- 31
SLD2	SOD	390- 34
SLD3	SOD	394- 70
SLD4	SOD	397- 48
SLD5	SOD	399-108
SLD6	SOD	401- 58
SLD7	SOD	402- 64
SLD8	SOD	404- 6
SLD9	SOD	404- 97
SLD10	SOD	406- 36
SLD11	SOD	406- 83
SLD12	SOD	407- 49
SLD15	SOD	408- 71
SLD20	SOD	410- 38
SLD25	SOD	411- 44
SLD30	SOD	412- 41
SLD35	SOD	412- 59
SLD40	SOD	412- 89
SLD45	SOD	412-108
SLD50	SOD	413- 12
SLD75	SOD	408- 63
SLD100	SOD	413- 27
SLD120	SOD	413- 32
SLDHV1	SOD	385- 99
SLDHV2	SOD	390- 1
SLDHV3	SOD	394- 44
SLDHV4	SOD	397- 27
SLDHV5	SOD	399- 75
SLDHV6	SOD	401- 29
SLDHV7	SOD	402- 46
SLDHV8	SOD	403- 91

TYPE No.	MFRS	Pg&Line
SLDHV9	SOD	404- 82
SLDHV10	SOD	406- 3
SLDHV15	SOD	408- 55
SLDHV20	SOD	410- 25
SLDHV25	SOD	411- 32
SLDHV30	SOD	412- 34
SLDHV35	SOD	412- 58
SLDHV40	SOD	412- 85
SLDHV45	SOD	412-105
SLDHV50	SOD	413- 9
SLDHV75	SOD	413- 19
SLDHV100	SOD	413- 25
SLDHV120	SOD	413- 31
SLEA1	SEN	305- 65
SLEA2	SEN	317- 3
SLEA3	SEN	325- 49
SLEA4	SEN	336- 23
SLEA05	♦SEN	297- 57
SLEA6	SEN	352-108
SLEA8	SEN	365- 13
SLEA10	♦SEN	374- 69
SLED11	SONY	597- 68
SLF8	♦SCO	290- 51
SLF10	♦SCO	290- 82
SLF15	♦SCO	291- 13
SLF20	♦SCO	291- 39
SLF25	♦SCO	291- 54
SLF30	♦SCO	291- 66
SLF40	♦SCO	291- 81
SM2B41	TOSJ	424- 48
SM2D41	TOSJ	433- 49
SM4	SCN	294- 48
SM5	SCN	293- 83
SM5A1020E4	INRB	580-102
INRC	INRI	
	INRJ	
SM5A1020E6	INRB	580-103
INRC	INRI	
	INRJ	
SM8	♦SCO	403- 54
SM10	SCN	300- 40
SM10∅	♦SCO	405- 62
SM10#	SCN	300- 41
SM11	SCN	301- 42
SM15	♦SCO	408- 28
SM20	SCN	311- 16
SM20∅	♦SCO	410- 2
SM20#	SCN	311- 17
SM25	♦SCO	411- 18
SM30	SCN	321- 43
SM30∅	♦SCO	412- 19
SM30#	SCN	321- 44
SM30G11	TOSJ	505- 98
SM31	SCN	322- 10
SM40	SCN	329-103
SM45	♦SCO	412-101
SM50	SCN	340- 18
SM51	SCN	340- 90
SM60	SCN	347- 23
SM70	SCN	355- 56
SM71	SCN	355- 90
SM72	TEC	165- 10
SM73	SCN	355- 18
SM80	SCN	360- 19
SM80B11	♦TOSJ	500- 38
SM80D11	♦TOSJ	502- 95
SM80G11	♦TOSJ	505- 99
SM81	SCN	361- 19
SM83	SCN	359- 37
SM100	SCN	370- 63
SM101	SCN	371- 54
SM103	SCN	369- 93
SM105	SCN	293-100
SM110	SCN	300- 66
SM120	SCN	311- 50
SM130	SCN	321- 72
SM140	SCN	330- 30
SM150	SCN	340- 41
SM150A	ORIJ	328- 24
SM150B	ORIJ	345- 88
SM150C	ORIJ	359- 6
SM150D	ORIJ	369- 49
SM150S	ORIJ	309- 70
SM150SS	ORIJ	298-106
SM153A,AM	NECJ	514- 75
SM153B,BM	NECJ	514- 76
SM153C,CM	NECJ	514- 77
SM160	SCN	347- 59
SM170	SCN	355- 64
SM180	SCN	360- 40
SM200	SCN	370- 84
SM205	SCN	293- 52
SM210	SCN	299-104
SM212	SCN	378- 14
SM220	SCN	310- 73
SM230	SCN	321- 4
SM240	SCN	329- 41
SM250	SCN	339- 86
SM260	SCN	346- 79
SM270	SCN	355- 39
SM280	SCN	359- 87
SM300	SCN	370- 29
SM305	SCN	377- 94
SM505	SCN	294- 49
SM510	SCN	301- 43
SM512	SCN	312- 42
SM513	SCN	322- 11
SM514	SCN	331- 23
SM515	SCN	340- 91
SM516	SCN	348- 44
SM517	SCN	355- 91
SM518	SCN	361- 20
SM520	SCN	371- 55
SM705	SCN	293-101

TYPE No	MFRS	Pg&Line
SM710	SCN	300- 67
SM720	SCN	311- 51
SM730	SCN	321- 73
SM740	SCN	330- 31
SM750	SCN	340- 42
SM760	SCN	347- 60
SM770	SCN	355- 65
SM780	SCN	360- 41
SM800	SCN	370- 85
SMF7-2	SAKJ	581-108
SMF13-2	SAKJ	581-109
SMH08	ORIJ	403- 70
SMH10	ORIJ	405- 87
SMH16	ORIJ	409- 3
SMHD08	ORIJ	403- 71
SMHD10	ORIJ	405- 88
SMHD16	ORIJ	409- 4
SMHR110	ORIJ	413- 30
SMHR135	ORIJ	413- 38
SMHR165	ORIJ	413- 42
SN10	PPC	260- 65
SN20	PPC	261- 18
SN30	PPC	261- 42
SN40	PPC	261- 54
SODSLD1	SOD	386- 49
SODSLD2	SOD	390- 47
SODSLD3	SOD	394- 79
SODSLD4	SOD	397- 59
SODSLD5	SOD	400- 16
SODSLD6	SOD	401- 65
SODSLD7	SOD	402- 70
SODSLD8	SOD	404- 16
SODSLD9	SOD	404-101
SODSLD10	SOD	406- 57
SODSLD11	SOD	406- 87
SODSLD12	SOD	407- 52
SODSLD15	SOD	408- 87
SODSLD20	SOD	410- 45
SODSLD25	SOD	411- 54
SODSLD30	SOD	412- 49
SODSLD35	SOD	412- 62
SODSLD40	SOD	412- 93
SODSLD45	SOD	413- 1
SODSLD50	SOD	413- 15
SODSLD75	SOD	413- 22
SODSLD100	SOD	413- 29
SODSLD120	SOD	413- 34
SP5	♦SCO	398-108
SP5F	♦SCO	289- 84
SP6	♦SCO	400- 71
SP6F	♦SCO	290- 5
SP7	♦SCO	402- 11
SP7F	♦SCO	290- 24
SP8	♦SCO	403- 33
SP8F	♦SCO	290- 52
SP9	♦SCO	404- 53
SP9F	♦SCO	290- 67
SP10	♦SCO	405- 40
SP10F	♦SCO	290- 83
SP11	♦SCO	406- 66
SP11F	♦SCO	290-101
SP12	♦SCO	406-105
SP12F	♦SCO	290-105
SP13	♦SCO	407- 59
SP60	ROSG	580-104
SP100△	GIC	274- 88
SP101	GIC	267- 33
SP102	GIC	268-102
SP103	GIC	270- 24
SP104	GIC	274- 89
SP105	GIC	277- 12
SPD102	SRPJ	576- 62
SPD111	SRPJ	576- 63
SPD500	SRPJ	576- 64
SPD511	SRPJ	576- 65
SPD530	SRPJ	576- 66
SPD540	♦SRPJ	576- 67
SPD541	♦SRPJ	576- 68
SPD551	♦SRPJ	576- 69
SPD570	SRPJ	576- 70
SPD580	SRPJ	576- 71
SPF60	♦SES	499- 47
SPF61	♦SES	499- 92
SPF62	♦SES	501- 8
SPF63	♦SES	502-109
SPF64	♦SES	504- 5
SPF65	♦SES	506- 12
SPF66	♦SES	507- 33
SPF67	♦SES	508- 29
SPF68	♦SES	508- 76
SPR5-01	INRB	576- 72
INRC	INRI	
	INRJ	
SPR5-08BPL	INRB	576- 73
INRC	INRI	
	INRJ	
SPR5-10BPL	INRB	576- 74
INRC	INRI	
	INRJ	
SPR6-01	INRB	576- 75
INRC	INRI	
	INRJ	
SPR6-08BPL	INRB	576- 76
INRC	INRI	
	INRJ	
SPR6-10BPL	INRB	576- 77
INRC	INRI	
	INRJ	
SPR8-01	INRB	576- 78
INRC	INRI	
	INRJ	
SPR8-08BPL	INRB	576- 79
INRC	INRI	
	INRJ	

TYPE No.	MFRS	Pg&Line
SPR8-10BPL	INRB	576- 80
INRC	INRI	
	INRJ	
SPR9-01	INRB	576- 81
INRC	INRI	
	INRJ	
SPR9-08BPL	INRB	576- 82
INRC	INRI	
	INRJ	
SPR9-10BPL	INRB	576- 83
INRC	INRI	
	INRJ	
SPR10-08BPL	INRB	576- 84
INRC	INRI	
	INRJ	
SQ1213A,B,C	♦MSI	530- 50
SQ1214A,B,C	♦MSI	531- 45
SQ1215A,B,C	♦MSI	531-110
SQ1216A,B,C	♦MSI	533- 14
SQ1217A,B,C	♦MSI	533- 55
SQ1218A,B,C	♦MSI	534- 58
SQ1219A,B,C	♦MSI	535- 17
SQ1220A,B,C	♦MSI	537- 16
SQ1222A,B,C	♦MSI	539- 41
SQ1224A,B,C	♦MSI	541- 47
SQ1226A,B,C	♦MSI	543- 76
SQ1228A,B,C	♦MSI	546- 5
SQ1230A,B,C	♦MSI	548- 6
SQ1232A,B,C	♦MSI	548- 61
SQ1234A,B,C	♦MSI	550- 65
SQ1236A,B,C	♦MSI	552- 51
SQ1238A,B,C	♦MSI	554- 49
SQ1263A,B,C	♦MSI	530- 51
SQ1264A,B,C	♦MSI	531- 46
SQ1265A,B,C	♦MSI	532- 1
SQ1266A,B,C	♦MSI	533- 15
SQ1267A,B,C	♦MSI	533- 56
SQ1268A,B,C	♦MSI	534- 59
SQ1269A,B,C	♦MSI	535- 18
SQ1270A,B,C	♦MSI	537- 17
SQ1272A,B,C	♦MSI	539- 42
SQ1274A,B,C	♦MSI	541- 48
SQ1276A,B,C	♦MSI	543- 77
SQ1278A,B,C	♦MSI	546- 6
SQ1280A,B,C	♦MSI	548- 7
SQ1282A,B,C	♦MSI	548- 62
SQ1284A,B,C	♦MSI	550- 66
SQ1286A,B,C	♦MSI	552- 52
SQ1288A,B,C	♦MSI	554- 50
SQ1716,B,C	♦MSI	532- 16
SQ1717,B,C	♦MSI	533- 41
SQ1718,B,C	♦MSI	534- 3
SQ1719,B,C	♦MSI	535- 19
SQ1720,B,C	♦MSI	537- 18
SQ1722,B,C	♦MSI	539- 43
SQ1724,B,C	♦MSI	541- 49
SQ1726,B,C	♦MSI	543- 78
SQ1728,B,C	♦MSI	546- 7
SQ1730,B,C	♦MSI	548- 8
SQ1732,B,C	♦MSI	548- 63
SQ1734,B,C	♦MSI	550- 67
SQ1736,B,C	♦MSI	552- 53
SQ1738,B,C	♦MSI	554- 51
SQ1740,B,C	♦MSI	556- 16
SQ1742,B,C	♦MSI	557- 85
SQ1744,B,C	♦MSI	559- 38
SQ1746,B,C	♦MSI	560- 42
SQ1748,B,C	♦MSI	561- 41
SQ1750,B,C	♦MSI	562- 9
SQ5441A	♦MSI	537- 19
SQ5441B	♦MSI	537- 20
SQ5441C	♦MSI	537- 21
SQ5442A	♦MSI	539- 44
SQ5442B	♦MSI	539- 45
SQ5442C	♦MSI	539- 46
SQ5443A	♦MSI	541- 50
SQ5443B	♦MSI	541- 51
SQ5443C	♦MSI	541- 52
SQ5444A	♦MSI	543- 79
SQ5444B	♦MSI	543- 80
SQ5444C	♦MSI	543- 81
SQ5445A	♦MSI	546- 8
SQ5445B	♦MSI	546- 9
SQ5445C	♦MSI	546- 10
SQ5446A	♦MSI	548- 9
SQ5446B	♦MSI	548- 10
SQ5446C	♦MSI	548- 11
SQ5447A	♦MSI	548- 64
SQ5447B	♦MSI	548- 65
SQ5447C	♦MSI	548- 66
SQ5448A	♦MSI	550- 68
SQ5448B	♦MSI	550- 69
SQ5448C	♦MSI	550- 70
SQ5449A	♦MSI	552- 54
SQ5449B	♦MSI	552- 55
SQ5449C	♦MSI	552- 56
SQ5450A	♦MSI	554- 52
SQ5450B	♦MSI	554- 53
SQ5450C	♦MSI	554- 54
SQ5451A	♦MSI	556- 17
SQ5451B	♦MSI	556- 18
SQ5451C	♦MSI	556- 19
SQ5452A	♦MSI	557- 86
SQ5452B	♦MSI	557- 87
SQ5452C	♦MSI	557- 88
SQ5453A	♦MSI	559- 39
SQ5453B	♦MSI	559- 40
SQ5453C	♦MSI	559- 41
SQ5454A	♦MSI	560- 43
SQ5454B	♦MSI	560- 44
SQ5454C	♦MSI	560- 45
SQ5455A	♦MSI	561- 42
SQ5455B	♦MSI	561- 43
SQ5455C	♦MSI	561- 44

△-Registered with JEDEC by this manufacturer

♦-Copy of mfr's data sheet may be ordered from D.A.T.A.

1. TYPE No. CROSS INDEX

IN TYPE NUMBER SEQUENCE

TYPE No.	MFRS	Pg&Line
SQ5456A	♦MSI	562- 10
SQ5456B	♦MSI	562- 11
SQ5456C	♦MSI	562- 12
SQ5461A	♦MSI	537- 22
SQ5461B	♦MSI	537- 23
SQ5461C	♦MSI	537- 24
SQ5462A	♦MSI	539- 47
SQ5462B	♦MSI	539- 48
SQ5462C	♦MSI	539- 49
SQ5463A	♦MSI	541- 53
SQ5463B	♦MSI	541- 54
SQ5463C	♦MSI	541- 55
SQ5464A	♦MSI	543- 82
SQ5464B	♦MSI	543- 83
SQ5464C	♦MSI	543- 84
SQ5465A	♦MSI	546- 11
SQ5465B	♦MSI	546- 12
SQ5465C	♦MSI	546- 13
SQ5466A	♦MSI	548- 12
SQ5466B	♦MSI	548- 13
SQ5466C	♦MSI	548- 14
SQ5467A	♦MSI	548- 67
SQ5467B	♦MSI	548- 68
SQ5467C	♦MSI	548- 69
SQ5468A	♦MSI	550- 71
SQ5468B	♦MSI	550- 72
SQ5468C	♦MSI	550- 73
SQ5469A	♦MSI	552- 57
SQ5469B	♦MSI	552- 58
SQ5469C	♦MSI	552- 59
SQ5470A	♦MSI	554- 55
SQ5470B	♦MSI	554- 56
SQ5470C	♦MSI	554- 57
SQ5471A	♦MSI	556- 20
SQ5471B	♦MSI	556- 21
SQ5471C	♦MSI	556- 22
SQ5472A	♦MSI	557- 89
SQ5472B	♦MSI	557- 90
SQ5472C	♦MSI	557- 91
SQ5473A	♦MSI	559- 42
SQ5473B	♦MSI	559- 43
SQ5473C	♦MSI	559- 44
SQ5474A	♦MSI	560- 46
SQ5474B	♦MSI	560- 47
SQ5474C	♦MSI	560- 48
SQ5475A	♦MSI	561- 45
SQ5475B	♦MSI	561- 46
SQ5475C	♦MSI	561- 47
SQ5476A	♦MSI	562- 13
SQ5476B	♦MSI	562- 14
SQ5476C	♦MSI	562- 15
SR1	SAKJ	581-110
SR1C1	MITJ	293- 91
SR1C2	MITJ	300- 57
SR1C4	MITJ	311- 40
SR1C6	MITJ	321- 62
SR1C8	MITJ	330- 20
SR1C12	MITJ	347- 47
SR1C16	MITJ	360- 32
SR1C20	MITJ	370- 75
SR1C24	MITJ	378- 7
SR1FM2	MITJ	300- 54
SR1FM4	MITJ	311- 37
SR1FM6	MITJ	321- 59
SR1FM8	MITJ	330- 16
SR1FM10	MITJ	340- 30
SR1FM12	MITJ	347- 42
SR1FM16	MITJ	359- 49
SR1FM20	MITJ	369-104
SR1HM4	MITJ	283- 42
SR1HM8	MITJ	285- 92
SR1HM12	MITJ	287- 41
SR1HM16	MITJ	287- 99
SR2	SAKJ	582- 1
SR2B1	MITJ	295- 36
SR2B2	MITJ	302- 65
SR2B4	MITJ	313- 71
SR2B6	MITJ	323- 7
SR2B8	MITJ	332- 57
SR2B12	MITJ	349- 77
SR2B16	MITJ	362- 27
SR2B20	MITJ	372- 51
SR2B24	MITJ	378- 96
SR3	SAKJ	582- 2
SR3AM1	MITJ	295- 23
SR3AM2	MITJ	302- 48
SR3AM4	MITJ	313- 52
SR3AM6	MITJ	322-104
SR3AM8	MITJ	332- 38
SR3AM10	MITJ	341- 66
SR3AM12	MITJ	349- 58
SR4	SAKJ	582- 3
SR10A8	MITJ	334- 58
SR10A10	MITJ	342-102
SR10A12	MITJ	351- 70
SR10A16	MITJ	363-103
SR10A20	MITJ	373- 85
SR10A24	MITJ	379- 52
SR10D10	MITJ	342-103
SR10D12	MITJ	351- 71
SR10D16	MITJ	363-104
SR10D20	MITJ	373- 86
SR10D24	MITJ	379- 53
SR10F1S	MITJ	296- 87
SR10F2S	MITJ	302- 16
SR10F4S	MITJ	315- 99
SR10F6S	MITJ	324- 80
SR10F8S	MITJ	334-106
SR10F10S	MITJ	343- 23
SR10J1S	MITJ	296- 90
SR10J2S	MITJ	304- 73
SR10J4S	MITJ	315-107
SR10J6S	MITJ	324- 86
SR10J8S	MITJ	335- 2

TYPE No.	MFRS	Pg&Line
SR10L1S	MITJ	296- 55
SR10L2S	MITJ	304- 31
SR10L4S	MITJ	315- 58
SR10L6S	MITJ	324- 52
SR10L8S	MITJ	334- 59
SR10L10S	MITJ	342-104
SR10N2S	MITJ	304- 67
SR10N4S	MITJ	315-100
SR10N6S	MITJ	324- 81
SR10N8S	MITJ	334-107
SR10N10S	MITJ	343- 24
SR20F1S	MITJ	297- 18
SR20F2S	MITJ	305- 13
SR20F4S	MITJ	316- 55
SR20F6S	MITJ	325- 6
SR20F8S	MITJ	335- 58
SR20F10S	MITJ	343- 57
SR25A1S	MITJ	297- 19
SR25A2S	MITJ	305- 14
SR25A4S	MITJ	316- 56
SR25A6S	MITJ	325- 7
SR25A8S	MITJ	335- 59
SR25A10S	MITJ	343- 58
SR30B6	MITJ	325- 26
SR30B10	MITJ	343- 74
SR30B12	MITJ	352- 79
SR30B16	MITJ	364- 88
SR30B20	MITJ	374- 50
SR30B24	MITJ	379- 73
SR70C10	MITJ	343-109
SR70C12	MITJ	353- 22
SR70C16	MITJ	365- 36
SR70C20	MITJ	374- 89
SR70C24	MITJ	379-108
SR70C30	MITJ	385- 20
SR70C36	MITJ	388- 66
SR70C40	MITJ	390- 64
SR100K2S	MITJ	306- 1
SR100K4S	MITJ	317- 55
SR100K6S	MITJ	325- 93
SR100K8S	MITJ	336- 80
SR200P12	MITJ	353-105
SR200P16	MITJ	365-108
SR200P20	MITJ	375- 44
SR200P24	MITJ	380- 46
SR200P30	MITJ	385- 39
SR200P36	MITJ	388- 70
SR200P40	MITJ	390- 66
SR400A40	MITJ	390- 78
SR400A50	MITJ	392- 80
SR400A60	MITJ	394-100
SR400A70	MITJ	395- 89
SR400A80	MITJ	397- 72
SR400C10	MITJ	345- 21
SR400C12	MITJ	354- 57
SR400C16	MITJ	366- 58
SR400C20	MITJ	375-100
SR400C24	MITJ	380- 99
SR400C30	MITJ	385- 76
SR400C40	MITJ	390- 79
SR400C50	MITJ	392- 81
SR400C60	MITJ	394-101
SR5700	ITT	165- 49
SR5701	ITT	165- 46
SR5702	ITT	165- 44
SR5703	ITT	165- 88
SR5704	ITT	165- 83
SR5705	ITT	165- 79
SRC200	SRPJ	576- 85
SRC201	SRPJ	576- 86
SRC291	♦SRPJ	576- 87
SRC360	SRPJ	576- 88
SRC391	♦SRPJ	576- 89
SRC420	SRPJ	576- 90
SRC720	SRPJ	576- 91
SRE4-05	USS	187- 6
SRE7-05	USS	187- 7
SRE9A05	USS	187- 8
SRE12B05	USS	187- 9
SRE17A05	USS	187- 10
SRE23B05	USS	187- 11
SRE33-05	USS	187- 12
SRE86A05	USS	187- 13
SRE115B05	USS	187- 14
SREA4-05	USS	187- 15
SREA7-05	USS	187- 16
SREA9A05	USS	187- 17
SREA12B05	USS	187- 18
SREA17A05	USS	187- 19
SREA23B05	USS	187- 20
SREA33-05	USS	187- 21
SREA86A05	USS	187- 22
SREA115B05	USS	187- 23
SS10	SOL	580-105
SS11	SOL	580-106
SS12	SOL	580-107
SS20	SOL	580-108
SS21	SOL	580-109
SS22	SOL	580-110
SS23	SOL	581- 1
SS30	SOL	581- 2
SS31	SOL	581- 3
SS100	SOL	581- 4
SS200A	♦SOL	581- 5
SS200B	♦SOL	581- 6
SS200C	♦SOL	581- 7
SS200D	♦SOL	581- 8
SS300-1	SOL	576- 92
SS300-2	SOL	576- 93
SS300-3	SOL	576- 94
SS300-4	SOL	576- 95
SS400-1	♦SOL	578- 24
SS400-2	♦SOL	578- 25
SS400-3	♦SOL	578- 26

TYPE No.	MFRS	Pg&Line
SS400-4	♦SOL	578- 27
SS400-5	♦SOL	578- 28
SS400-6	♦SOL	578- 29
SS400-7	♦SOL	578- 30
SS500	♦SOL	578- 31
SS2020G	SRPJ	581- 9
SSD708	GESY	248-102
SSD974	GESY	246- 10
SSiB0110	SHWG	307- 93
SSiB0120	SHWG	322- 29
SSiB0140	SHWG	348- 72
SSiB0160	SHWG	367- 17
SSiB0180	SHWG	371- 75
SSiB0510	SHWG	307- 79
SSiB0520	SHWG	321- 71
SSiB0540	SHWG	347- 58
SSiB0580	SHWG	370- 83
SSiB0610	SHWG	307- 91
SSiB0620	SHWG	322- 18
SSiB0640	SHWG	348- 54
SSiB0680	SHWG	371- 60
SSiB9860A	SHWG	376- 40
SSiB9880A	SHWG	382- 24
SSiB9890A	SHWG	386- 32
SSiC0810	SHWG	307- 95
SSiC0820	SHWG	322- 80
SSiC0840	SHWG	349- 26
SSiC0860	SHWG	367- 22
SSiC0880	SHWG	372- 11
SSiC1120	SHWG	322- 91
SSiC1140	SHWG	349- 37
SSiC1160	SHWG	367- 25
SSiC1180	SHWG	372- 20
SSiC1220	SHWG	323- 36
SSiC1240	SHWG	350- 11
SSiC1260	SHWG	367- 40
SSiC1280	SHWG	372- 84
SSiC1310	SHWG	307-109
SSiC1320	SHWG	323- 74
SSiC1340	SHWG	350- 62
SSiC1360	SHWG	367- 50
SSiC1380	SHWG	373- 5
SSiC1560A	SHWG	367- 18
SSiC1580A	SHWG	378- 59
SSiC1660A	SHWG	367- 21
SSiC1680A	SHWG	378- 76
SSiC1710	SHWG	307- 92
SSiC1720	SHWG	322- 19
SSiC1740	SHWG	348- 55
SSiC1780	SHWG	371- 61
SSiC1960A	SHWG	367- 28
SSiC1980A	SHWG	378- 97
SSiC2060A	SHWG	367- 49
SSiC2080A	SHWG	379- 12
SSiC9960A	SHWG	376- 45
SSiC9980A	SHWG	382- 30
SSiC9990A	SHWG	386- 37
SSiC15100A	SHWG	384- 90
SSiC16100A	SHWG	384- 95
SSiC19100A	SHWG	384- 98
SSiC20100A	SHWG	384-105
SSiD0440	SHWG	351- 46
SSiD0460	SHWG	367- 78
SSiD0460A	SHWG	367- 79
SSiD0480	SHWG	379- 43
SSiD0480A	SHWG	379- 44
SSiD04100	SHWG	385- 8
SSiD04100A	SHWG	385- 9
SSiD9960A	SHWG	376- 57
SSiD9980A	SHWG	382- 44
SSiD9990A	SHWG	386- 55
SSiE1102	SHWG	292- 64
SSiE1105	SHWG	298- 65
SSiE1110	SHWG	308- 44
SSiE1120	SHWG	325- 14
SSiE1130	SHWG	338- 53
SSiE1140	SHWG	352- 58
SSiE1202	SHWG	292- 65
SSiE1205	SHWG	298- 66
SSiE1210	SHWG	308- 45
SSiE1220	SHWG	325- 15
SSiE1230	SHWG	338- 54
SSiE1240	SHWG	352- 59
SSiE1305	SHWG	298- 63
SSiE1310	SHWG	308- 38
SSiE1320	SHWG	325- 8
SSiE1330	SHWG	338- 51
SSiE1340	SHWG	352- 51
SSiE1405	SHWG	298- 64
SSiE1410	SHWG	308- 39
SSiE1420	SHWG	325- 9
SSiE1430	SHWG	338- 52
SSiE1440	SHWG	352- 52
SSiE2040	SHWG	354-105
SSiE2060	SHWG	374- 23
SSiE2080A	SHWG	382- 59
SSiE2702	SHWG	292- 61
SSiE2705	SHWG	298- 58
SSiE2710	SHWG	308- 17
SSiE2715	SHWG	318- 98
SSiE2802	SHWG	292- 62
SSiE2805	SHWG	298- 59
SSiE2810	SHWG	308- 18
SSiE2815	SHWG	318- 99
SSiE20100	SHWG	387- 80
SSiE20100A	SHWG	387- 81
SSiF2020	SHWG	325- 51
SSiF2040	SHWG	354-106
SSiF2060	SHWG	374- 70
SSiF2060A	SHWG	374- 71
SSiF2080	SHWG	382- 74
SSiF2080A	SHWG	382- 75
SSiK0420	SHWG	326- 36
SSiK0440	SHWG	354-108

TYPE No.	MFRS	Pg&Line
SSiK0460	SHWG	375- 42
SSiK0480	SHWG	383- 11
SSiK2120	SHWG	326- 14
SSiK2140	SHWG	354-107
SSiK2160	SHWG	375- 28
SSiK2160A	SHWG	375- 29
SSiK2180	SHWG	382-109
SSiK2180A	SHWG	382-110
SSiL2060	SHWG	376-105
SSiL2080	SHWG	383- 15
SSiL2080A	SHWG	383- 16
SSiL9820	SHWG	367- 95
SSiL9840	SHWG	358- 40
SSiL9860	SHWG	377- 13
SSiL9880	SHWG	383- 43
SSiL9920	SHWG	337- 57
SSiL9940	SHWG	358- 15
SSiL9960	SHWG	376-106
SSiL9980	SHWG	292- 7
SSiL20100	SHWG	387- 86
SSiL20100A	SHWG	383- 17
SSiL20120	SHWG	391- 29
SSiL98100	SHWG	388- 78
SSiL99100	SHWG	388- 71
SSiN2060	SHWG	375- 99
SSiN2080	SHWG	383- 63
SSiN2080A	SHWG	383- 64
SSiN9920	SHWG	338- 10
SSiN9940	SHWG	358- 59
SSiN9960	SHWG	377- 29
SSiN9980	SHWG	383- 67
SSiN20100	SHWG	387- 96
SSiN20100A	SHWG	387- 97
SSiN20120	SHWG	390- 81
SSiN98100	SHWG	388- 89
SSiN98110	SHWG	390- 82
SSiN98120	SHWG	391- 36
SSiN98135	SHWG	392- 1
SSiN98145	SHWG	392-109
SSiN98155	SHWG	393- 45
SSiP0160	SHWG	376- 25
SSiP0180	SHWG	383- 96
SSiP01100	SHWG	387-110
SSM410	♦SOL	581- 10
SSM510	♦SOL	581- 11
SSM920	♦SOL	581- 12
SSM1020	♦SOL	581- 13
SSR4-001	SOL	576- 96
SSR5-001	SOL	576- 97
SSR6-001	SOL	576- 98
SSR7-001	SOL	576- 99
SSR8-001	SOL	576-100
SSR9-001	SOL	576-101
SSR10-001	SOL	576-102
SSR10-002	SOL	576-103
SSRC9-001	SOL	576-104
ST1	SOIF	317- 89
ST2△	SOIF	337- 12
ST2⊘	GESY	498- 79
ST3	SOIF	365- 90
ST4	SOIF	375- 30
ST5	SOIF	380- 33
ST6	SOIF	383- 2
ST8	INRB	377- 52
	INRC	INRI
		INRJ
ST9	INRB	406- 48
	INRC	INRI
		INRJ
ST10	INRB	406- 40
	INRC	INRI
		INRJ
ST11	INRB	402-100
	INRC	INRI
		INRJ
ST12△	INRB	412- 81
	INRC	INRI
		INRJ
ST12⊘	SAR	311- 52
ST13	INRB	377- 55
	INRC	INRI
		INRJ
ST14△	INRB	386- 9
	INRC	INRI
		INRJ
ST14⊘	SAR	330- 32
ST16	SAR	347- 62
ST18	SAR	360- 42
ST22	APD	165- 19
	♦EAS	
ST23	APD	165- 12
	♦EAS	
ST24	♦EAS	246- 1
ST37	APD	165- 39
	♦EAS	
ST38	APD	165- 82
	♦EAS	
ST39	APD	165-188
	♦EAS	
ST41	APD	166-168
	♦EAS	
ST280	♦SAR	363- 98
ST610	♦SAR	305-105
ST620	♦SAR	317- 49
ST630	♦SAR	325- 86
ST640	♦SAR	336- 72
ST650	♦SAR	344- 13
ST660	♦SAR	353- 39
ST710	♦SAR	306- 28
ST720	♦SAR	317- 87
ST730	♦SAR	326- 12
ST740	♦SAR	337- 8
ST750	♦SAR	344- 51
ST760	♦SAR	353- 81
ST810	♦SAR	306- 59

TYPE No.	MFRS	Pg&Line
ST820	♦SAR	318- 9
ST830	♦SAR	326- 44
ST840	♦SAR	337- 49
ST850	♦SAR	344- 81
ST860	♦SAR	354- 1
ST910	SAR	306- 60
ST920	SAR	318- 10
ST930	SAR	326- 45
ST940	SAR	337- 50
ST950	SAR	344- 82
ST960	SAR	354- 2
ST1010	♦SAR	306- 29
ST1020	♦SAR	317- 88
ST1030	♦SAR	326- 13
ST1040	♦SAR	337- 9
ST1050	♦SAR	344- 52
ST1060	♦SAR	353- 82
STB1	APD	165- 21
	SET	
STB2	APD	165- 55
	SET	
STB4	APD	166- 2
	SET	
STB7	APD	170- 34
	SET	
STB12	APD	181- 45
	SET	
STB567	APD	246- 58
	♦GESY	
STB568	APD	246- 59
	♦GESY	
STB569	APD	246- 60
	♦GESY	
STD28	SCN	601- 36
STD30	SCN	601- 37
STD33	SCN	601- 38
STD36	SCN	601- 39
STD39	SCN	601- 40
STD43	SCN	601- 41
STD47	SCN	601- 42
STD51	SCN	601- 43
STD56	SCN	601- 44
STD62	SCN	601- 45
STD68	SCN	601- 46
STD75	SCN	601- 47
STD82	SCN	601- 48
STD91	SCN	601- 49
STD100	SCN	601- 50
STD110	SCN	601- 51
STD120	SCN	601- 52
STD629	GESY	567- 6
STV3	SAKJ	582- 4
SU012	TSAJ	296- 77
SU101A,K	AEIL	306- 25
SU112	TSAJ	304- 53
SU201A,K	AEIL	317- 84
SU212	TSAJ	315- 82
SU312	TSAJ	324- 70
SU401A,K	AEIL	337- 4
SU412	TSAJ	334- 89
SU512	TSAJ	343- 18
SU601A,K	AEIL	353- 77
SU801A,K	AEIL	365- 86
SU1001A,K	AEIL	375- 23
SUT101K	AEIL	305- 46
SUT201K	AEIL	316- 88
SUT401K	AEIL	335-100
SUT601K	AEIL	352- 86
SUT801K	AEIL	364- 97
SUT1001K	AEIL	374- 57
SUT1201K	AEIL	379- 83
SUT1401K	AEIL	382- 67
SV1⊘	SCH	165- 13
SV1LR	SCH	165- 4
SV02	SAKJ	582- 5
SV05	SAKJ	582- 6
SV07	SAKJ	582- 7
SV14B	NECJ	601- 53
SV14C	NECJ	601- 54
SV24A	NECJ	601- 55
SV24B	NECJ	601- 56
SV55A	NECJ	525- 93
SV55B	NECJ	528- 97
SV55C	NECJ	531- 53
SV55D	NECJ	534- 24
SV56A	NECJ	527- 32
SV56B	NECJ	530- 28
SV56C	NECJ	532- 83
SV56D	NECJ	535- 82
SV66B	♦NECJ	530- 29
SV66C	♦NECJ	532- 84
SV66D	NECJ	535- 83
SV67C	♦NECJ	532- 85
SV67D	♦NECJ	535- 84
SV77D	NECJ	541- 56
SV77E	NECJ	546- 14
SV77F	NECJ	550- 74
SV77G	NECJ	554- 58
SV77H	NECJ	557- 92
SV87A	NECJ	538- 97
SV87B	NECJ	544- 57
SV87C	NECJ	553- 12
SV87D	NECJ	559- 83
SV88A	NECJ	538- 98
SV88B	NECJ	544- 58
SV88C	NECJ	553- 13
SV88D	NECJ	559- 84
SV89D	NECJ	535- 85
SV89E	NECJ	542- 63
SV100A1	VEC	582- 8
SV100A3	VEC	582- 9
SV100A	VEC	582- 10
SV100D	VEC	582- 11
SV110	♦SIX	533- 92

△-Registered with JEDEC by this manufacturer

♦-Copy of mfr's data sheet may be ordered from D.A.T.A.

1. TYPE No. CROSS INDEX

IN TYPE NUMBER SEQUENCE

TYPE No.	MFRS	Pg&Line
SV111	♦SIX	533- 93
SV112	♦SIX	533- 94
SV113	♦SIX	533- 95
SV114	♦SIX	533- 96
SV121	TEC	170- 22
SV122	TEC	171- 68
SV123	TEC	172- 76
SV124	TEC	173-195
SV125	TEC	176-128
SV126	TEC	178-173
SV127	TEC	179- 62
SV128	TEC	181- 54
SV129	TEC	183-199
SV131	TEC	184-109
SV132	TEC	187- 40
SV133	TEC	187-112
SV134	TEC	189-152
SV135	TEC	191-196
SV136	TEC	194- 81
SV137	TEC	196- 25
SV138	TEC	197- 27
SV139	TEC	199- 33
SV141	TEC	200-170
SV142	TEC	201-111
SV143	TEC	203-114
SV144	TEC	204- 86
SV168	TEC	206- 54
SV169	TEC	208- 53
SV171	TEC	210- 85
SV213C	♦NECJ	523- 98
SV214C	♦NECJ	527- 42
SV220	♦SIX	538- 57
SV230	♦SIX	534-105
SV240	♦SIX	532-100
SV264B	NECJ	531- 17
SV287D	NECJ	538- 55
SV534C,D	NECJ	527- 43
SV543C,D	NECJ	523- 99
SV544C,D	NECJ	527- 44
SV566D	NECJ	534- 25
SV1004	TEC	170- 29
SV1005	TEC	171- 80
SV1006	TEC	172- 79
SV1007	TEC	174- 8
SV1008	TEC	176-145
SV1009	TEC	178-178
SV1010	TEC	180- 10
SV1011	TEC	181- 64
SV1012	TEC	183-206
SV1013	TEC	184-184
SV1014	TEC	187- 45
SV1015	TEC	188- 61
SV1016	TEC	190- 61
SV1017	TEC	192-129
SV1018	TEC	194-188
SV1019	TEC	196- 73
SV1020	TEC	197-147
SV1021	TEC	199-139
SV1022	TEC	201- 26
SV1023	TEC	202- 54
SV1024	TEC	203-164
SV1025	TEC	205- 8
SV1033	TEC	206-167
SV1034	TEC	208-157
SV1035	TEC	210- 87
SV3140	TEC	165- 47
SV3141	TEC	165- 70
SV3142	TEC	165-103
SV3143	TEC	165-144
SV3144	TEC	166- 10
SV3145	TEC	166- 77
SV3170	TEC	178-163
SV3171	TEC	178-164
SV3173	TEC	183-112
SV3174	TEC	183-113
SV3175	TEC	183-114
SV3176	TEC	183-115
SV3206	TEC	200-155
SV3207	TEC	200-156
SV9785	TEC	183-158
SV9786	TEC	183-159
SVC625	TEC	175- 21
SVC650	TEC	175- 22
SVC925	TEC	184-179
SVC950	TEC	184-180
SVC1125	TEC	191-131
SVC1150	TEC	191-132
SVD203	TRW	281- 89
SVD206	TRW	281- 92
SVD215	TRW	281- 93
SVD230	TRW	281-102
SVM61	TEC	174-122
SVM81	TEC	183-140
SVM91	TEC	184-110
SVM111	TEC	191- 90
SVM605	TEC	174-123
SVM805	TEC	183-141
SVM905	TEC	184-111
SVM1105	TEC	191- 91
SVM6010	TEC	174-124
SVM6011	TEC	174-125
SVM6020	TEC	174-126
SVM6021	TEC	174-127
SVM8010	TEC	183-142
SVM8011	TEC	183-143
SVM8020	TEC	183-144
SVM8021	TEC	183-145
SVM9010	TEC	184-112
SVM9011	TEC	184-113
SVM9020	TEC	184-114
SVM9021	TEC	184-115
SVM11020	TEC	191- 92
SVM11021	TEC	191- 93
SVR12A	TEC	194- 1

TYPE No.	MFRS	Pg&Line
SVR12B	TEC	194- 2
SVR12C	TEC	194- 3
SVR19A	TEC	203-150
SVR19B	TEC	203-151
SW1A	ORIJ	329-104
SW1B	ORIJ	347- 24
SW1C	ORIJ	360- 20
SW1D	ORIJ	370- 64
SW1S	ORIJ	311- 18
SW1SS	ORIJ	300- 42
SW05A	ORIJ	328-102
SW05B	ORIJ	346- 47
SW05C	ORIJ	359- 56
SW05D	ORIJ	369-110
SW05S	ORIJ	310- 35
SW05SS	ORIJ	299- 72
SW10	TEC	416- 4
SW11	TEC	416- 5
SWH2-16	ORIJ	409- 17
SWH08	ORIJ	403-103
SWH10	ORIJ	406- 20
SWHD3-16	ORIJ	409- 18
SWHD3-20	ORIJ	410- 33
SX10LB	VAC	581- 14
SX641	MULB	274- 7
SX642	MULB	280- 66
SX643	MULB	281- 77
SX644	MULB	284- 63
SX645	MULB	285-103
SX751	♦MULB	303-100
SX752	♦MULB	315- 10
SX753	♦MULB	324- 18
SX754	♦MULB	334- 9
SX780	MULB	266- 92
SX781	MULB	273- 66
SX782	MULB	280- 33
SZ2 4	HSC	165-185
	SCH	SES
SZ2 7	HSC	166- 60
	SCH	SES
SZ3.0	HSC	166-140
	SCH	SES
SZ3 3	HSC	167- 59
	SCH	SES
SZ3 6	HSC	168- 19
	SCH	SES
SZ3.9	HSC	168-169
	SCH	SES
SZ4 3	HSC	169-168
	SCH	SES
SZ4 7	HSC	170-175
	SCH	SES
SZ5	SHWG	171- 69
SZ5 1	HSC	172- 17
	SCH	SES
SZ5 6	HSC	173- 88
	SCH	SES
SZ6	SHWG	173-196
SZ6 2	HSC	175- 63
	SCH	SES
SZ6.8	HSC	178- 16
	SCH	SES
SZ7	SHWG	178-174
SZ7.5	HSC	180- 60
	SCH	SES
SZ8	SHWG	181- 55
SZ8 2	HSC	182-110
	SCH	SES
SZ9	SHWG	184-116
SZ9.1	HSC	186- 41
	SCH	SES
SZ10	SHWG	187-113
SZ10C	MULB	188-169
SZ10 0	HSC	188-122
		SES
SZ11	SHWG	189-153
SZ11C	MULB	190-152
SZ11 0	HSC	190-114
	SCH	SES
SZ12	SHWG	191-197
SZ12C	MULB	193- 62
SZ12 0	HSC	193- 14
	SCH	SES
SZ13	SHWG	194- 82
SZ13C	MULB	195- 91
SZ13.0	HSC	195- 51
	SCH	SES
SZ14	SHWG	196- 26
SZ15	SHWG	197- 28
SZ15B	MULB	198-177
SZ15C	MULB	198- 64
SZ15 0	HSC	198- 20
	SCH	SES
SZ16	SHWG	199- 34
SZ16C	MULB	200- 40
SZ16 0	HSC	199-185
	SCH	SES
SZ17	SHWG	200-171
SZ18	SHWG	201-112
SZ18B	MULB	203- 69
SZ18C	MULB	202-155
SZ19	SHWG	203-115
SZ20	SHWG	204- 87
SZ20C	MULB	205- 95
SZ22B	MULB	207-191
SZ22C	MULB	207- 80
SZ24C	MULB	209- 58
SZ27B	MULB	212- 59
SZ27C	MULB	211-146
SZ30C	MULB	213-141
SZ33B	MULB	216- 14
SZ33C	MULB	215-110
SZ39B	MULB	218-172
SZ47B	MULB	222- 10

TYPE No.	MFRS	Pg&Line
SZ56A	MULB	173-109
SZ56B	MULB	225- 55
SZ62A	MULB	175- 86
SZ68A	MULB	178- 57
SZ68B	MULB	228- 49
SZ75A	MULB	180- 99
SZ82A	MULB	182-152
SZ91A	MULB	186- 81
SZ200-4	ORIJ	169- 28
SZ200-5	ORIJ	171- 63
SZ200-6	ORIJ	173-190
SZ200-7	ORIJ	178-167
SZ200-9	ORIJ	184-103
SZ200-11	ORIJ	189-130
SZ200-13	ORIJ	194- 65
SZ200-16	ORIJ	199- 16
SZL6	SHWG	174- 12
SZL7	SHWG	178-182
SZL8	SHWG	181- 66
SZL9	SHWG	184-188
SZL10	SHWG	188-148
SZL11	SHWG	190-134
SZL12	SHWG	193- 41
T0 8N0 6A00	INTG	422- 22
T0 8N1A00	INTG	423- 88
T0.8N2A00	INTG	432- 80
T0 8N3A00	INTG	442- 51
T0 8N4A00	INTG	448-104
T0 8N5A00	INTG	457- 21
T1/1	ITTE	251- 55
T1/2	ITTE	255- 33
T1/3	ITTE	257- 71
T1/4	ITTE	258- 45
T1/5	ITTE	259- 15
T1G	TEC	249- 69
T1N100	AEGG	424- 5
T1N200	AEGG	432-108
T1N300	AEGG	442- 69
T1N400	AEGG	449- 18
T1N500	AEGG	457- 26
T2G	♦TEC	251-106
T3/1	ITTE	251- 62
T3/2	ITTE	255- 39
T3/3	ITTE	257- 77
T3/4	ITTE	258- 51
T3/5	ITTE	259- 20
T3G	♦TEC	251-101
T3N0 6C00	INTG	422- 50
T3N1C00	INTG	424- 92
T3N2C00	INTG	433-103
T3N3C00	INTG	443- 12
T3N4C00	INTG	449-102
T3N5C00	INTG	457- 52
T4G	TEC	254- 61
T5F50	EBRG	419- 39
T5F100	EBRG	425- 71
T5F200	EBRG	434- 92
T5F400	EBRG	450- 88
T5G	♦TEC	254- 74
T006	PIR	419- 15
T006-5	PIR	419- 16
T006-66	PIR	419- 17
T006S	PIR	419- 18
T6/1	ITTE	251- 71
T6/2	ITTE	255- 45
T6/3	ITTE	257- 83
T6/4	ITTE	258- 57
T6/5	ITTE	259- 25
T6F100C	AEGG	425- 94
T6F100H	AEGG	425- 95
T6F200C	AEGG	434- 57
T6F200H	AEGG	435- 12
T6F300C	AEGG	443- 51
T6F300H	AEGG	443- 85
T6F400C	AEGG	450- 53
T6F400H	AEGG	451- 8
T6F500C	AEGG	457- 92
T6F500H	AEGG	458- 15
T6F600C	AEGG	463- 88
T6F600H	AEGG	464- 26
T6F700C	AEGG	470-101
T6F700H	AEGG	470-102
T6N100C	AEGG	425- 96
T6N100H	AEGG	425- 97
T6N200C	AEGG	434- 58
T6N200H	AEGG	434- 59
T6N300C	AEGG	443- 52
T6N300H	AEGG	443- 53
T6N400C	AEGG	450- 54
T6N400H	AEGG	450- 55
T6N500C	AEGG	460- 20
T6N500H	AEGG	457- 93
T6N600C	AEGG	463- 89
T6N600H	AEGG	463- 90
T6N700C	AEGG	470-103
T6N700H	AEGG	470-104
T7	TEC	251- 42
T7KV	SOD	402- 47
T8/1	ITTE	251- 78
T8/2	ITTE	255- 51
T8/3	ITTE	257- 89
T8/4	ITTE	258- 63
T8/5	ITTE	259- 30
T8F100C	AEGG	425-106
T8F100H	AEGG	425-107
T8F200C	AEGG	435- 13
T8F200H	AEGG	435- 30
T8F300C	AEGG	443- 86
T8F300H	AEGG	443- 98
T8F400C	AEGG	451- 9
T8F400H	AEGG	451- 29
T8F500C	AEGG	458- 16
T8F500H	AEGG	458- 24
T8F600C	AEGG	464- 27

TYPE No.	MFRS	Pg&Line
T8F600H	AEGG	464- 42
T8F700C	AEGG	470-105
T8F700H	AEGG	470-106
T8G	♦TEC	252- 18
T8N100C	AEGG	425-108
T8N100H	AEGG	425-109
T8N200C	AEGG	435- 14
T8N200H	AEGG	435- 15
T8N300C	AEGG	443- 87
T8N300H	AEGG	443- 88
T8N400C	AEGG	451- 10
T8N400H	AEGG	451- 11
T8N500C	AEGG	458- 17
T8N500H	AEGG	458- 18
T8N600C	AEGG	464- 28
T8N600H	AEGG	464- 29
T8N700C	AEGG	470-107
T8N700H	AEGG	470-108
T9	TEC	251- 32
T9G	♦TEC	252- 19
T010	PIR	419- 70
T010S	PIR	419- 71
T10KV	SOD	406- 4
T10N100C	AEGG	426- 58
T10N100H	AEGG	426- 59
T10N200C	AEGG	435- 71
T10N200H	AEGG	435- 72
T10N300C	AEGG	444- 14
T10N300H	AEGG	444- 15
T10N400C	AEGG	451- 68
T10N400H	AEGG	451- 69
T10N500C	AEGG	458- 55
T10N500H	AEGG	458- 56
T10N600C	AEGG	464- 81
T10N600H	AEGG	464- 82
T10N700C	AEGG	471- 5
T10N700H	AEGG	471- 6
T11	TEC	248- 40
T12	TEC	251- 18
T12G	♦TEC	251-102
T13	TEC	247- 21
T13G	♦TEC	247- 41
T14	TEC	247- 22
T14F100C	AEGG	427- 3
T14F100E	AEGG	427- 4
T14F200C	AEGG	436- 42
T14F200E	AEGG	436- 43
T14F300C	AEGG	444- 72
T14F300E	AEGG	444- 73
T14F400C	AEGG	452- 34
T14F400E	AEGG	452- 35
T14F500C	AEGG	459- 3
T14F500E	AEGG	459- 4
T14F600C	AEGG	465- 44
T14F600E	AEGG	465- 45
T14F700C	AEGG	471- 21
T14F700E	AEGG	471- 22
T14F800C	AEGG	475- 21
T14F800E	AEGG	475- 22
T14F900C	AEGG	479- 80
T14F900E	AEGG	479- 81
T14G	♦TEC	247- 42
T015	PIR	419- 88
T015S	PIR	419- 89
T15Δ	TEC	280- 28
T15G	♦TEC	280- 83
T15N400C	AEGG	452- 39
T15N400E	AEGG	452- 40
T15N500C	AEGG	459- 8
T15N500E	AEGG	459- 9
T15N600C	AEGG	465- 47
T15N600E	AEGG	465- 48
T15N700C	AEGG	471- 23
T15N700E	AEGG	471- 24
T15N800C	AEGG	475- 23
T15N800E	AEGG	475- 24
T15N900C	AEGG	479- 82
T15N900E	AEGG	479- 83
T15N1000C	AEGG	482- 47
T15N1000E	AEGG	482- 48
T15N1100C	AEGG	485- 95
T15N1100E	AEGG	485- 96
T15N1200C	AEGG	487- 83
T15N1200E	AEGG	487- 84
T15N1300C	AEGG	490- 62
T15N1300E	AEGG	490- 63
T16	TEC	274- 52
T17	TEC	254- 62
T18	TEC	250- 8
T18F100C	AEGG	427- 42
T18F100E	AEGG	427- 43
T18F200C	AEGG	436- 84
T18F200E	AEGG	436- 85
T18F300C	AEGG	444- 99
T18F300E	AEGG	444-100
T18F400C	AEGG	452- 80
T18F400E	AEGG	452- 81
T18F500C	AEGG	459- 41
T18F500E	AEGG	459- 42
T18F600C	AEGG	465- 92
T18F600E	AEGG	465- 93
T18F700C	AEGG	471- 33
T18F700E	AEGG	471- 34
T18F800C	AEGG	475- 55
T18F800E	AEGG	475- 56
T18F900C	AEGG	479- 88
T18F900E	AEGG	479- 89
T19	TEC	253- 14
T19G	♦TEC	253- 15
T20Z	TEC	250- 9
T20G	♦TEC	250- 88
T21Δ	SOIF	317-101
T21Z	TEC	247- 65
T21G	♦TEC	247- 66

TYPE No.	MFRS	Pg&Line
T22Δ	SOIF	337- 29
T22Z	TEC	246- 80
T22G	♦TEC	246- 92
T22N400C	AEGG	452-107
T22N400E	AEGG	452-108
T22N500C	AEGG	459- 62
T22N500E	AEGG	459- 63
T22N600C	AEGG	466- 3
T22N600E	AEGG	466- 4
T22N700C	AEGG	471- 46
T22N700E	AEGG	471- 47
T22N800C	AEGG	475- 72
T22N800E	AEGG	475- 73
T22N900C	AEGG	479- 94
T22N900E	AEGG	479- 95
T22N1000C	AEGG	482- 70
T22N1000E	AEGG	482- 71
T22N1100C	AEGG	485-105
T22N1100E	AEGG	485-106
T22N1200C	AEGG	487- 99
T22N1200E	AEGG	487-100
T22N1300C	AEGG	490- 70
T22N1300E	AEGG	490- 71
T23	SOIF	365-104
T23G	♦TEC	250- 10
T24Δ	SOIF	375- 39
T24G	♦TEC	248- 9
T025	PIR	420- 33
T025S	PIR	420- 34
T25Z	SOIF	380- 42
T26	SOIF	383- 8
T26G	♦TEC	247- 23
T27G	♦TEC	246- 81
T30F100C	AEGG	427-105
T30F100E	AEGG	427-106
T30F200C	AEGG	437- 36
T30F200E	AEGG	437- 37
T30F300C	AEGG	445- 55
T30F300E	AEGG	445- 56
T30F400C	AEGG	453- 41
T30F400E	AEGG	453- 42
T30F500C	AEGG	459-104
T30F500E	AEGG	459-105
T30F600C	AEGG	466- 50
T30F600E	AEGG	466- 51
T30F700C	AEGG	471- 72
T30F700E	AEGG	471- 73
T30F800C	AEGG	475-101
T30F800E	AEGG	475-102
T30F900C	AEGG	480- 11
T30F900E	AEGG	480- 12
T31	SOIF	318- 40
T32	SOIF	337- 83
T33	SOIF	366- 35
T34	SOIF	375- 77
T35Δ	SOIF	380- 74
T36	SOIF	383- 34
T50F100	AEGG	428- 18
T50F200	AEGG	437- 79
T50F300	AEGG	445- 89
T50F400	AEGG	453- 85
T50F500	AEGG	460- 22
T50F600	AEGG	466-101
T50F700	AEGG	471- 96
T50F800	AEGG	476- 31
T50F900	AEGG	480- 33
T50N400	AEGG	453- 86
T50N500	AEGG	460- 23
T50N600	AEGG	466-102
T50N700	AEGG	471- 97
T50N800	AEGG	476- 32
T50N900	AEGG	480- 34
T50N1000	AEGG	483- 17
T50N1100	AEGG	486- 27
T50N1200	AEGG	488- 33
T50N1300	AEGG	490- 83
T70N400	♦AEGG	454- 40
T70N600	♦AEGG	467- 68
T70N800	♦AEGG	476- 94
T70N1000	♦AEGG	483- 64
T70N1200	♦AEGG	488- 74
T70N1400	♦AEGG	492- 15
T70N1600	♦AEGG	493- 62
T95F100	AEGG	428- 87
T95F200	AEGG	438- 85
T95F300	AEGG	446- 75
T95F400	AEGG	454-108
T95F500	AEGG	461- 28
T95F600	AEGG	468- 62
T95F700	AEGG	472- 75
T95F800	AEGG	477- 62
T95F900	AEGG	481- 4
T106	PIR	425- 37
T106-5	PIR	425- 38
T106-66	PIR	425- 39
T106S	PIR	425- 40
T110	PIR	426- 21
T110S	PIR	426- 22
T115	PIR	426- 66
T115S	PIR	426- 67
T125	PIR	427- 44
T125S	PIR	427- 45
T130N400	♦AEGG	453- 54
T130N600	♦AEGG	466- 63
T130N800	♦AEGG	476- 4
T130N1000	♦AEGG	482-107
T130N1200	♦AEGG	488- 21
T130N1400	♦AEGG	491-106
T161N400	♦AEGG	455- 52
T161N600	♦AEGG	469- 10
T161N800	♦AEGG	478- 6
T161N1000	♦AEGG	484- 61
T161N1200	♦AEGG	489- 44
T161N1400	♦AEGG	492- 49

Δ-Registered with JEDEC by this manufacturer

♦-Copy of mfr's data sheet may be ordered from D.A.T.A.

1. TYPE No. CROSS INDEX

IN TYPE NUMBER SEQUENCE

TYPE No.	MFRS	Pg&Line
T171F400	♦AEGG	455- 61
T171F600	♦AEGG	469- 22
T171F800	♦AEGG	478- 16
T171F1000	♦AEGG	484- 71
T175N2200	♦AEGG	495- 3
T175N2400	♦AEGG	495- 7
T175N2600	♦AEGG	495- 16
T206	♦PIR	502- 28
T206-5	PIR	434- 55
T206-66	PIR	434- 56
T206S	♦PIR	502- 29
T210	♦PIR	435- 53
T210S	♦PIR	435- 54
T215	♦PIR	435-100
T215S	♦PIR	435-101
T221N400	♦AEGG	455-106
T221N600	♦AEGG	469- 74
T221N800	♦AEGG	478- 60
T221N1000	♦AEGG	484-103
T221N1200	♦AEGG	489- 79
T221N1400	♦AEGG	492- 70
T225	♦PIR	502- 84
T225S	♦PIR	502- 85
T235N1600	♦AEGG	493-109
T235N1800	♦AEGG	494- 65
T235N2000	♦AEGG	494- 99
T236N2000	♦AEGG	494-100
T236N2200	♦AEGG	495- 4
T236N2400	♦AEGG	495- 8
T250F400	AEGG	455-103
T250F500	AEGG	461- 96
T250F600	AEGG	469- 71
T250F700	AEGG	473- 10
T250F800	AEGG	478- 57
T250F900	AEGG	481- 46
T250F1000	AEGG	484-102
T302N400	♦AEGG	456- 17
T302N600	♦AEGG	469- 98
T302N800	♦AEGG	478- 83
T302N1000	♦AEGG	485- 15
T302N1200	♦AEGG	489- 99
T302N1400	♦AEGG	492- 84
T406	♦PIR	505- 21
T406-5	PIR	450- 51
T406-66	PIR	450- 52
T406S	♦PIR	505- 22
T410	♦PIR	505- 51
T410S	♦PIR	505- 52
T415	♦PIR	505- 64
T415S	♦PIR	505- 65
T425	♦PIR	505- 78
T425S	♦PIR	505- 79
T506	PIR	457- 88
T506-5	PIR	457- 89
T506-66	PIR	457- 90
T506S	PIR	457- 91
T510	PIR	458- 45
T510S	PIR	458- 46
T515	PIR	458- 79
T515S	PIR	458- 80
T606	PIR	463- 84
T606-5	PIR	463- 85
T606-66	PIR	463- 86
T606S	PIR	463- 87
T610	PIR	464- 64
T610S	PIR	464- 65
T615	PIR	464-109
T615S	PIR	464-110
T800	SCN	360- 21
T1000	SCN	370- 65
TA50	SCN	294- 25
TA100	SCN	301- 4
TA200	SCN	311-105
TA300	SCN	321- 99
TA400	SCN	330- 87
TA500	SCN	340- 73
TA600	SCN	348- 6
TA800	SCN	360- 94
TA1000	SCN	371- 19
TA3002R	SOIF	318- 39
TA3004R	SOIF	337- 82
TA3006R	SOIF	354- 32
TA3008R	SOIF	366- 34
TA3010R	SOIF	375- 76
TA3012R	SOIF	380- 73
TA3014R	SOIF	383- 33
TA3016R	SOIF	387- 20
TA3018R	SOIF	388- 75
TA3020R	SOIF	390- 68
TA3022R	SOIF	391- 30
TA3024R	SOIF	391-108
TA3026R	SOIF	392-108
TA3028R	SOIF	393- 44
TA3030R	SOIF	394- 97
TAG1-50	♦TAGS	418- 7
TAG1-100	♦TAGS	423- 95
TAG1-200	♦TAGS	432- 88
TAG1-300	♦TAGS	442- 55
TAG1-400	♦TAGS	448-110
TAG1-500	♦TAGS	457- 25
TAG2-50	♦TAGS	418- 8
TAG2-100	♦TAGS	423- 96
TAG2-200	♦TAGS	432- 89
TAG2-300	♦TAGS	442- 56
TAG2-400	♦TAGS	449- 1
TAG3-100	TAGS	424-108
TAG3-200	TAGS	434- 12
TAG3-400	TAGS	450- 11
TAG3-500	TAGS	457- 64
TAG3-600	TAGS	463- 49
TAG06-30	♦TAGS	416- 75
TAG06-60	♦TAGS	422- 16
TAG06-90	♦TAGS	422- 95
TAG6-100	♦TAGS	425- 81
TAG6-200	♦TAGS	434-104
TAG6-400	♦TAGS	450-100
TAG6-500	♦TAGS	458- 5
TAG6-600	♦TAGS	464- 11
TAG7-100	♦TAGS	425- 82
TAG7-200	♦TAGS	434-105
TAG7-400	♦TAGS	450-101
TAG7-500	♦TAGS	458- 6
TAG7-600	♦TAGS	464- 12
TAG7-800	♦TAGS	474- 56
TAG7S100	♦TAGS	425- 83
TAG7S200	♦TAGS	434-106
TAG7S400	♦TAGS	450-102
TAG7S500	♦TAGS	458- 7
TAG7S600	♦TAGS	464- 13
TAG7S800	♦TAGS	474- 57
TAG10-100	TAGS	426- 23
TAG10-200	TAGS	435- 55
TAG10-400	TAGS	451- 52
TAG10-500	TAGS	458- 47
TAG10-600	TAGS	464- 66
TAG10-800	TAGS	474- 79
TAG10S100	TAGS	426- 24
TAG10S200	TAGS	435- 56
TAG10S400	TAGS	451- 53
TAG10S500	TAGS	458- 48
TAG10S600	TAGS	464- 67
TAG10S800	TAGS	474- 80
TAG15-100	TAGS	426- 68
TAG15-200	TAGS	435-102
TAG15-400	TAGS	451- 97
TAG15-500	TAGS	458- 83
TAG15-600	TAGS	465- 2
TAG15-800	TAGS	474- 98
TAG15S100	TAGS	426- 69
TAG15S200	TAGS	435-103
TAG15S400	TAGS	451- 98
TAG15S500	TAGS	458- 84
TAG15S600	TAGS	465- 3
TAG15S800	TAGS	474- 99
TAG20-100	TAGS	427- 12
TAG20-200	TAGS	436- 52
TAG20-400	TAGS	452- 46
TAG20-500	TAGS	459- 14
TAG20-600	TAGS	465- 54
TAG20-800	TAGS	475- 28
TAG20S100	TAGS	427- 13
TAG20S200	TAGS	436- 53
TAG20S400	TAGS	452- 47
TAG20S500	TAGS	459- 15
TAG20S600	TAGS	465- 55
TAG20S800	TAGS	475- 29
TAG302-100	TAGS	499-105
TAG302-200	TAGS	501-101
TAG302-400	TAGS	504- 99
TAG302-500	TAGS	506- 96
TAG302-600	TAGS	507- 87
TAG306-200	TAGS	501-102
TAG306-400	TAGS	504-100
TAG306-600	TAGS	507- 88
TAG307-200	TAGS	501-103
TAG307-400	TAGS	504-101
TAG307-600	TAGS	507- 89
TAG307-800	TAGS	509- 5
TAG310-200	TAGS	502- 98
TAG310-400	TAGS	504-102
TAG310-600	TAGS	507- 90
TAG310-800	TAGS	509- 6
TC10A5A	SOD	188-123
TC10A50A	SOD	188-124
TC12 4A5A	SOD	193-198
TC14 6A5A	SOD	196-167
TC16 8A5A	SOD	200-160
TC18 5A5A	SOD	203- 93
TC21A5A	SOD	206- 20
TC23A5A	SOD	208- 21
TC27A5A	SOD	211-101
TC30A5A	SOD	213- 99
TC33A5A	SOD	215- 66
TC37A5A	SOD	217-118
TC43A5A	SOD	219-143
TC47A5A	SOD	221- 84
TC51A5B	SOD	223- 32
TC56A5B	SOD	224-114
TC62A5B	SOD	226- 63
TC68A5B	SOD	227-121
TC75A5B	SOD	229- 35
TC82A5B	SOD	230-116
TC87A5B	SOD	231- 95
TC91A5B	SOD	232- 52
TC100A5B	SOD	233- 97
TC105A5B	SOD	234-103
TC106A1	♦TEC	424- 83
TC106A2	♦SES	424- 84
TC106A3	♦SES	424- 85
TC106A4	♦SES	424- 86
TC106B1	♦TEC	433- 94
TC106B2	♦SES	433- 95
TC106B3	♦SES	433- 96
TC106B4	♦SES	433- 97
TC106C1	♦TEC	443- 5
TC106C2	♦SES	443- 6
TC106C3	♦SES	443- 7
TC106C4	♦SES	443- 8
TC106D1	♦TEC	449- 95
TC106D2	♦SES	449- 96
	♦TEC	
TC106D3	♦SES	449- 97
	♦TEC	
TC106D4	♦SES	449- 98
	♦TEC	
TC106F1	♦TEC	418- 72
TC106F2	♦SES	418- 73
	♦TEC	
TC106F3	♦SES	418- 74
	♦TEC	
TC106F4	♦SES	418- 75
	♦TEC	
TC106Q1	♦TEC	414- 71
TC106Q2	♦SES	414- 72
	♦TEC	
TC106Q3	♦SES	414- 73
	♦TEC	
TC106Q4	♦SES	414- 74
	♦TEC	
TC106Y1	♦TEC	417- 27
TC106Y2	♦SES	417- 28
	♦TEC	
TC106Y3	♦SES	417- 29
	♦TEC	
TC106Y4	♦SES	417- 30
	♦TEC	
TC110A5B	SOD	235- 61
TC120A5B	SOD	236- 85
TC130A5C	SOD	237-122
TC150A5C	SOD	239-101
TC175A5C	SOD	241-122
TC200A5C	SOD	243-104
TCR102	TEC	427- 27
TCR152	TEC	430-110
TCR202	TEC	436- 67
TCR252	TEC	441- 21
TCR302	TEC	444- 92
TCR352	TEC	448- 26
TCR402	TEC	452- 61
TCR550	TEC	420- 94
TCR1050	TEC	428- 35
TCR1550	TEC	431- 44
TCR2050	TEC	438- 4
TCR2550	TEC	441- 65
TCR3050	TEC	446- 11
TCR3550	TEC	448- 41
TCR4050	TEC	454- 23
TD5	SOIF	457- 23
TD6	SOIF	462- 92
TD7	SOIF	470- 72
TD8	SOIF	473- 93
TD9	GESY	567- 7
TD13	SAKJ	381- 35
TD15	SAKJ	384- 87
		567- 99
TD251	GESY	569- 66
TD251A	GESY	569- 63
TD252	GESY	570- 99
TD252A	GESY	570- 96
TD253	GESY	571-101
TD253A	GESY	571- 94
TD253B	GESY	571- 72
TD254	GESY	572- 89
TD254A	GESY	572- 86
TD255	GESY	573- 17
TD255A	GESY	572-109
TD256	GESY	573- 49
TD256A	GESY	573- 45
TD261	GESY	569- 67
TD261A	GESY	569- 64
TD262	GESY	570-100
TD262A	GESY	570- 97
TD263	GESY	571-102
TD263A	GESY	571- 95
TD263B	GESY	571- 73
TD264	GESY	572- 90
TD264A	GESY	572- 87
TD265	GESY	573- 18
TD265A	GESY	572-110
TD266	GESY	573- 50
TD266A	GESY	573- 46
TD271	GESY	569- 68
TD271A	GESY	569- 65
TD272	GESY	570-101
TD272A	GESY	570- 98
TD273	GESY	571-103
TD273A	GESY	571- 96
TD273B	GESY	571- 74
TD274	GESY	572- 91
TD274A	GESY	572- 88
TD275	GESY	573- 19
TD275A	GESY	573- 1
TD276	GESY	573- 51
TD276A	GESY	573- 47
TD401	GESY	568-107
TD402	GESY	568-106
TD403	GESY	568-105
TD404	GESY	568-104
TD405	GESY	568-103
TD406	GESY	568-102
TD407	GESY	568-101
TD408	GESY	568-100
TD409	GESY	568- 99
TD411	GESY	569- 83
TD412	GESY	569- 82
TD413	GESY	569- 81
TD414	GESY	569- 80
TD415	GESY	569- 79
TD416	GESY	569- 78
TD417	GESY	569- 77
TD418	GESY	569- 76
TD419	GESY	569- 75
TD421	GESY	570- 34
TD422	GESY	570- 33
TD423	GESY	570- 32
TD424	GESY	570- 31
TD425	GESY	570- 30
TD426	GESY	570- 29
TD427	GESY	570- 28
TD428	GESY	570- 27
TD429	GESY	570- 26
TD431	GESY	570- 76
TD432	GESY	570- 75
TD433	GESY	570- 74
TD434	GESY	570- 73
TD435	GESY	570- 72
TD436	GESY	570- 71
TD437	GESY	570- 70
TD438	GESY	570- 69
TD439	GESY	570- 68
TD501	SOIF	418- 3
TD501J	SOIF	417-105
TD501S	SOIF	418- 4
TD554	GESY	572- 17
TD710	♦GESY	567- 8
TD712	♦GESY	567- 96
TD713	♦GESY	567- 89
TD714	♦GESY	569- 73
TD715	♦GESY	569- 71
TD716	♦GESY	566- 1
TD717	♦GESY	570-106
TD718	♦GESY	572- 28
TD719	♦GESY	572- 26
TD1001	SOIF	423- 91
TD1001J	SOIF	423- 77
TD1001S	SOIF	423- 92
TD2001	SOIF	432- 84
TD2001J	SOIF	432- 67
TD2001S	SOIF	432- 85
TD3001	SOIF	442- 52
TD3001J	SOIF	442- 44
TD3001S	SOIF	442- 53
TD4001	SOIF	448-106
TD4001J	SOIF	448- 97
TD4001S	SOIF	448-107
TD5001	SOIF	457- 24
TD5001J	SOIF	457- 20
TD6001	SOIF	462- 93
TD6001J	SOIF	462- 88
TD7001	SOIF	470- 73
TD7001J	SOIF	470- 71
TD8001	SOIF	473- 94
TD8001J	SOIF	473- 90
TDAL110	SOIF	501-107
TDAL220	SOIF	504-104
TDH1	SOIF	423- 78
TDH2	SOIF	432- 68
TDH3	SOIF	442- 45
TDH4	SOIF	448- 98
TDR1	SOIF	423- 93
TDR2	SOIF	432- 86
TDR3	SOIF	442- 54
TDR4	SOIF	448-108
TDR05	SOIF	418- 5
TDRA1	SOIF	423- 79
TDRA2	SOIF	432- 69
TDRA3	SOIF	442- 46
TDRA4	SOIF	448- 99
TDRA05	SOIF	417-106
TF1	TIID	250- 61
	♦TIIF	
TF2	TIID	254- 34
	♦TIIF	
TF3	TIID	256- 46
	♦TIIF	
TF5	TIID	271- 33
	TIIF	
TF6	TIID	278- 18
	TIIF	
TF7	TIID	271- 73
	TIIF	
TF17	TIID	250- 24
	♦TIIF	
TF18	TIID	250- 44
	♦TIIF	
TF19	TIID	250- 23
	♦TIIF	
TF20	TIID	250- 52
	TIIF	
TF21	TIID	254- 21
	TIIF	
TF22	TIID	256- 35
	TIIF	
TF23	TIID	257- 38
	TIIF	
TF24	TIID	258- 90
	TIIF	
TF36	TIID	278- 19
	TIIF	
TF44	TIID	269- 40
	TIIF	
TF51	TIID	271- 84
	TIIF	
TF75	TIID	271-107
	TIIF	
TF156	TIID	260- 57
	♦TIIF	
TF157	TIID	260- 47
	♦TIIF	
TF200	TIID	281- 10
	TIIF	
TFR105	TEC	272- 61
TFR110	TEC	279- 16
TFR120	TEC	282- 84
TFR140	TEC	285- 56
TFR305	TEC	272- 62
TFR310	TEC	279- 17
TFR320	TEC	282- 85
TFR340	TEC	285- 57
TFR605	TEC	272- 63
TFR610	TEC	279- 18
TFR620	TEC	282- 86
TFR640	TEC	285- 58
TFR1205	TEC	272- 64
TFR1210	TEC	279- 19
TFR1220	TEC	282- 87
TFR1240	TEC	285- 59
TG30	♦SES	499- 43
TG31	♦SES	499- 86
TG32	♦SES	500- 79
TG33	♦SES	502-107
TG34	♦SES	503- 76
TG35	♦SES	505-101
TG36	♦SES	507- 24
TH40A	SAKJ	308- 31
TH1003	SAKJ	325- 88
TH1004	SAKJ	336- 75
TH1005	SAKJ	344- 15
TI2	TIIB	269- 46
TI6	TIIB	265-102
TI42	TIIB	496- 49
TI42A	TIID	601- 57
	TIIF	
TI43	TIIB	496- 50
TI43A	TIID	601- 58
	TIIF	
TI51	♦TII	247- 31
TI52	♦TII	248- 49
TI53	♦TII	249- 32
TI54	TIID	250- 48
	TIIF	
TI55	TIID	253- 4
	TIIF	
TI56	TIID	254-101
	TIIF	
TI57	TIID	257- 50
	TIIF	
TI58	♦TII	258- 39
TI59	♦TII	259- 2
TI60	♦TII	259- 65
TI145A0	♦TII	418- 24
TIIB	TIID	
	TIIF	
TI145A1	♦TII	424- 25
TIIB	TIID	
	TIIF	
TI145A2	♦TII	433- 26
TIIB	TIID	
	TIIF	
TI145A3	♦TII	442- 78
TIIB	TIID	
	TIIF	
TI145A4	♦TII	449- 38
TIIB	TIID	
	TIIF	
TI550	♦TII	281- 66
TI551	♦TII	283- 82
TI3010	TIIB	419- 37
TI3011	TIIB	425- 69
TI3012	TIIB	434- 90
TI3013	TIIB	443- 68
TI3014	TIIB	450- 86
TI3037	TIIB	420- 39
TI3038	TIIB	427- 56
TI3039	TIIB	436- 96
TI3040	TIIB	444-109
TI3041	TIIB	452- 92
TI3042	TIIB	459- 53
TIC35	♦TII	414- 34
	TIIB	
TIC36	♦TII	416- 62
	TIIB	
TIC44	♦TII	417- 89
TIIB	TIID	
	TIIF	
TIC45	♦TII	421- 91
TIIB	TIID	
	TIIF	
TIC46	♦TII	423- 34
TIIB	TIID	
	TIIF	
TIC47	♦TII	432- 38
TIIB	TIID	
	TIIF	
TIC54	♦TII	601- 59
TIC55	♦TII	601- 60
TIC56	♦TII	601- 61
TIC57	♦TII	601- 62
TIC106A	TII	425- 18
	TIIB	
TIC106B	TII	434- 33
	TIIB	
TIC106C	TII	443- 42
	TIIB	
TIC106D	TII	450- 30
	TIIB	
TIC106F	TII	418-110
	TIIB	
TIC106Y	TII	417- 34
	TIIB	
TIC116A	TII	425- 92
	TIIB	
TIC116B	TII	435- 10
	TIIB	
TIC116C	TII	443- 83
	TIIB	
TIC116D	TII	451- 6
	TIIB	
TIC116E	TII	458- 14
	TIIB	

Δ-Registered with JEDEC by this manufacturer

♦-Copy of mfr's data sheet may be ordered from D.A.T.A.

1. TYPE No. CROSS INDEX

IN TYPE NUMBER SEQUENCE

TYPE No	MFRS	Pg&Line
TIC116F	TII	419- 54
	TIIB	
TIC116M	TII	464- 24
	TIIB	
TIC126A	TII	426- 45
	TIIB	
TIC126B	TII	435- 81
	TIIB	
TIC126C	TII	444- 24
	TIIB	
TIC126D	TII	451- 76
	TIIB	
TIC126E	TII	458- 65
	TIIB	
TIC126F	TII	419- 82
	TIIB	
TIC126M	TII	464- 93
	TIIB	
TIC220B	TIID	502- 30
	TIIF	
TIC220D	TIID	505- 23
	TIIF	
TIC220E	TIID	506-105
	TIIF	
TIC221B	TIID	502- 31
	TIIF	
TIC221D	TIID	505- 24
	TIIF	
TIC221E	TIID	506-106
	TIIF	
TIC222B	TIID	502- 32
	TIIF	
TIC222D	TIID	505- 25
	TIIF	
TIC222E	TIID	506-107
	TIIF	
TIC226B	TII	502- 35
	TIIB	
TIC226D	TII	504- 97
	TIIB	
TIC230B	TIID	502- 61
	TIIF	
TIC230D	TIID	505- 53
	TIIF	
TIC230E	TIID	507- 7
	TIIF	
TIC231B	TIID	502- 62
	TIIF	
TIC231D	TIID	505- 54
	TIIF	
TIC231E	TIID	507- 8
	TIIF	
TIC232B	TIID	502- 63
	TIIF	
TIC232D	TIID	505- 55
	TIIF	
TIC232E	TIID	507- 9
	TIIF	
TIC240B	TIID	502- 72
	TIIF	
TIC240D	TIID	505- 66
	TIIF	
TIC240E	TIID	507- 12
	TIIF	
TIC241B	TIID	502- 73
	TIIF	
TIC241D	TIID	505- 67
	TIIF	
TIC241E	TIID	507- 21
	TIIF	
TIC242B	TIID	496- 5
	TIIF	
TIC242D	TIID	496- 9
	TIIF	
TIC242E	TIID	496- 11
	TIIF	
TIC250B	TII	501- 75
TIIB	TIID	
	TIIF	
TIC250D	TII	504- 72
TIIB	TIID	
	TIIF	
TIC250E	TII	506- 71
TIIB	TIID	
	TIIF	
TIC250M	TII	507- 64
TIIB	TIID	
	TIIF	
TIC252B	TII	501- 76
TIIB	TIID	
	TIIF	
TIC252D	TII	504- 73
TIIB	TIID	
	TIIF	
TIC252E	TII	506- 72
TIIB	TIID	
	TIIF	
TIC252M	TII	507- 65
TIIB	TIID	
	TIIF	
TIC260B	TII	501- 92
TIIB	TIID	
	TIIF	
TIC260D	TII	504- 89
TIIB	TIID	
	TIIF	
TIC260E	TII	506- 86
TIIB	TIID	
	TIIF	
TIC260M	TII	507- 77
TIIB	TIID	
	TIIF	
TIC262B	TII	501- 93
cont next col		

TYPE No.	MFRS	Pg&Line
TIC262B		
(cont)	TIIB	
TIID	TIIF	
TIC262D	TII	504- 90
TIIB	TIID	
	TIIF	
TIC262E	TII	506- 87
TIIB	TIID	
	TIIF	
TIC262M	TII	507- 78
TIIB	TIID	
	TIIF	
TIC270B	TII	501- 95
TIIB	TIID	
	TIIF	
TIC270D	TII	504- 92
TIIB	TIID	
	TIIF	
TIC270E	TII	506- 89
TIIB	TIID	
	TIIF	
TIC270M	TII	507- 79
TIIB	TIID	
	TIIF	
TIC272B	TII	501- 96
TIIB	TIID	
	TIIF	
TIC272D	TII	504- 93
TIIB	TIID	
	TIIF	
TIC272E	TII	506- 90
TIIB	TIID	
	TIIF	
TIC272M	TII	507- 80
TIIB	TIID	
	TIIF	
TID17	♦TII	273- 67
TID18	♦TII	269- 55
TID19	♦TII	273- 68
TID20	♦TII	269- 56
TID31	♦TII	275- 79
TID32	♦TII	278- 20
TID33	♦TII	275-100
TID34	♦TII	278- 21
TID35	♦TII	275-101
TID36	♦TII	278- 22
TID37	♦TII	275- 80
TID38	♦TII	275- 73
	TIIB	
TID39	♦TII	275-108
	TIIB	
TID40	♦TII	283- 92
TID41	♦TII	281-103
TID42	♦TII	281- 1
TID43	♦TII	281- 2
TID44	♦TII	278- 39
TID45	♦TII	283- 95
	TIIB	
TIL23	♦TII	597- 69
	TIIB	
TIL24	♦TII	597- 70
	TIIB	
TIL102	TII	601- 63
	TIIB	
TIL103	TII	601- 64
	TIIB	
TIL107	♦TII	597- 71
	TIIB	
TIL108	♦TII	597- 72
	TIIB	
TIL201	♦TII	597- 73
	TIIB	
TIL202	♦TII	597- 74
	TIIB	
TIL203	TII	578- 32
	TIIB	
TIL204	TII	578- 33
	TIIB	
TIL205	TII	578- 34
	TIIB	
TIL206	TII	578- 35
	TIIB	
TIL207	TII	578- 36
	TIIB	
TIL208	TII	578- 37
	TIIB	
TIV306	♦TII	538- 16
	TIIB	
TIV307	♦TII	539- 64
	TIIB	
TIV308	♦TII	542- 76
	TIIB	
TIX90	TIIB	420- 18
TIX91	TIIB	427- 6
TIX92	TIIB	436- 45
TIX93	TIIB	444- 75
TIX94	TIIB	452- 37
TIX95	TIIB	459- 6
TIXL06	♦TII	597- 75
TIXL12	♦TII	597- 76
	TIIB	
TIXL13	♦TII	597- 77
	TIIB	
TIXL14	♦TII	597- 78
	TIIB	
TIXL15	♦TII	597- 79
	TIIB	
TIXL16	♦TII	597- 80
	TIIB	
TIXL17	♦TII	597- 81
	TIIB	
TIXL18	♦TII	597- 82
	TIIB	

TYPE No.	MFRS	Pg&Line
TIXL19	TII	597- 83
	TIIB	
TIXL20	TII	597- 84
	TIIB	
TIXL21	TII	597- 85
	TIIB	
TIXL22	TII	597- 86
	TIIB	
TIXL26	♦TII	597- 87
	♦TIIB	
TIXL27	♦TII	597- 88
	♦TIIB	
TIXL28	♦TII	597- 89
	♦TIIB	
TIXL29	♦TII	597- 90
	♦TIIB	
TIXL30	♦TII	597- 91
	♦TIIB	
TIXL51	♦TII	576-105
TIXL52	♦TII	576-106
TIXL53	♦TII	576-107
TIXL55	♦TII	576-108
TIXL56	♦TII	576-109
TIXL57	♦TII	576-110
TIXL68	♦TII	577- 1
	♦TIIB	
TIXL69	♦TII	577- 2
	♦TIIB	
TIXL109	♦TII	575- 1
	♦TIIB	
TIXV01	♦TII	523- 35
	TIIB	
TIXV02	♦TII	524- 72
TIXV03	♦TII	524- 3
TIXV04	♦TII	524- 4
TIXV05	TIIB	524- 44
TK1	SOIF	428- 8
TK1FA	SOIF	427- 89
TK1FB	SOIF	427- 90
TK2	SOIF	437- 64
TK2FA	SOIF	437- 20
TK2FB	SOIF	437- 21
TK3	SOIF	445- 68
TK3FA	SOIF	445- 31
TK3FB	SOIF	445- 32
TK4	SOIF	453- 70
TK4FA	SOIF	453- 19
TK4FB	SOIF	453- 20
TK05	SOIF	420- 75
TK5△	SOIF	460- 4
TK5⊘	TEC	293- 84
TK5FA	SOIF	459- 85
TK5FB	SOIF	459- 86
TK6	SOIF	466- 76
TK6FA	SOIF	466- 30
TK6FB	SOIF	466- 31
TK7	SOIF	471- 82
TK7FA	SOIF	471- 59
TK7FB	SOIF	471- 60
TK8	SOIF	476- 17
TK8FA	SOIF	475- 86
TK8FB	SOIF	475- 87
TK9	SOIF	479- 98
TK9FA	SOIF	479-104
TK9FB	SOIF	479-105
TK10	SOIF	300- 43
	TEC	482- 76
TK10FA	SOIF	482- 82
TK10FB	SOIF	482- 83
TK11	SOIF	486- 3
TK12	SOIF	487-104
TK13	SOIF	487-105
TK14	SOIF	491- 96
TK15	SOIF	493- 4
TK16	SOIF	493- 45
TK20	TEC	311- 19
TK30	TEC	321- 45
TK40	TEC	329-105
TK50	TEC	340- 19
TK60	TEC	347- 25
TK105	SOIF	421- 2
TK110	SOIF	428- 65
TK110FA	SOIF	428- 29
TK110FB	SOIF	428- 30
TK120	SOIF	438- 46
TK120FA	SOIF	437-101
TK120FB	SOIF	437-102
TK130	SOIF	446- 49
TK130FA	SOIF	445-107
TK130FB	SOIF	445-108
TK140	SOIF	454- 69
TK140FA	SOIF	454- 4
TK140FB	SOIF	454- 5
TK150	SOIF	460- 95
TK150FA	SOIF	460- 39
TK150FB	SOIF	460- 40
TK160	SOIF	467-108
TK160FA	SOIF	467- 26
TK160FB	SOIF	467- 27
TK170	SOIF	471-100
TK170FA	SOIF	472- 1
TK170FB	SOIF	472- 2
TK180	SOIF	476- 36
TK180FA	SOIF	476- 57
TK180FB	SOIF	476- 58
TK190	SOIF	480- 39
TK190FA	SOIF	480- 46
TK190FB	SOIF	480- 47
TK1100	SOIF	486- 31
TK1100FA	SOIF	483- 39
TK1100FB	SOIF	483- 40
TK1110	SOIF	486- 32
TK1120	SOIF	488- 36
TK1130	SOIF	490- 85

TYPE No	MFRS	Pg&Line
TK1140	SOIF	492- 2
TK1150	SOIF	493- 8
TK1160	SOIF	493- 52
TKF5	TEC	293- 41
TKF10	TEC	299- 88
TKF20	TEC	310- 55
TKF40	TEC	329- 21
TKF60	TEC	346- 63
TKF80	TEC	359- 75
TKF100	TEC	370- 17
TM1	TEC	295- 53
TM2	TEC	294- 69
TM3	TEC	292-103
TM5	TEC	294- 70
TM9	TEC	297- 2
TM11	TEC	302- 85
TM12	TEC	301- 63
TM13	TEC	299- 97
TM19	TEC	304-105
TM21	TEC	313- 94
TM22	TEC	312- 63
TM23	TEC	310- 66
TM29	TEC	316- 29
TM31	TEC	323- 24
TM32	TEC	322- 28
TM33	TEC	320- 45
TM39	TEC	324-108
TM41	TEC	332- 87
TM42	TEC	331- 45
TM43	TEC	328- 38
TM49	TEC	335- 36
TM51	TEC	341- 99
TM52	TEC	340-108
TM53	TEC	339- 80
TM55	TEC	340-110
TM56	TEC	340- 43
TM59	TEC	343- 50
TM61	TEC	349-102
TM62	TEC	348- 69
TM63	TEC	345-103
TM65	TEC	348- 71
TM66	TEC	347- 61
TM69	TEC	352- 33
TM84	TEC	362- 56
TM85	TEC	361- 41
TM86	TEC	359- 88
TM104	TEC	372- 69
TM105	TEC	371- 76
TM124	TEC	378-102
TM125	TEC	378- 60
TM126	TEC	377- 96
TM155	TEC	384- 91
TM156	TEC	384- 68
TM504	SOIF	418- 47
TM507	SOIF	418- 80
TM507S	SOIF	418- 81
TM510	SOIF	419- 11
TM1004	SOIF	424- 55
TM1007	SOIF	424- 94
TM1007S	SOIF	424- 95
TM1010	SOIF	425- 31
TM2004	SOIF	433- 55
TM2007	SOIF	433-106
TM2007S	SOIF	433-107
TM2010	SOIF	434- 51
TM3004	SOIF	442- 98
TM3007	SOIF	443- 14
TM3007S	SOIF	443- 15
TM3010	SOIF	443- 47
TM4004	SOIF	449- 61
TM4007	SOIF	449-104
TM4007S	SOIF	449-105
TM4010	SOIF	450- 47
TM5004	SOIF	457- 39
TM5007	SOIF	457- 54
TM5010	SOIF	457- 86
TM6004	SOIF	463- 9
TM6007	SOIF	463- 40
TM6010	SOIF	463- 82
TM7004	SOIF	470- 82
TM7007	SOIF	470- 87
TM7010	SOIF	470- 91
TM8004	SOIF	474- 8
TM8007	SOIF	474- 26
TM8010	SOIF	474- 35
TMAL110	SOIF	502- 13
TMAL220	SOIF	505- 8
TMD24	TEC	272- 92
TMD25	TEC	279- 73
TMD27	TEC	283- 16
TMD41	TEC	250- 41
TMD42	TEC	254- 4
TMD45	TEC	257- 19
TMD50	TEC	271- 2
TMD914	TEC	275- 68
TMD916	TEC	275- 69
TN10	PPC	260- 67
TN12	PPC	260- 84
TN15	PPC	260-105
TNF10	PPC	288- 29
TNF12	PPC	288- 72
TNF15	PPC	288- 92
TP55	SHWG	577- 3
TP56	SHWG	577- 4
TP57	SHWG	577- 5
TP60	SHWG	578- 38
TP61	SHWG	578- 39
TP100	♦NPC	577- 6
TP504	SOIF	419- 20
TP506	SOIF	419- 59
TP1004	SOIF	425- 46
TP1006	SOIF	425-105
TP2004	SOIF	434- 63
TP2006	SOIF	435- 25

TYPE No.	MFRS	Pg&Line
TP3004	SOIF	443- 57
TP3006	SOIF	443- 97
TP4004	SOIF	450- 59
TP4006	SOIF	451- 24
TP5004	SOIF	457- 97
TP5006	SOIF	458- 23
TP6004	SOIF	463- 94
TP6006	SOIF	464- 37
TP8004	SOIF	474- 36
TP8006	SOIF	474- 68
TR1	SOIF	426- 85
TR2	SOIF	436- 11
TR3	SOIF	444- 44
TR4	SOIF	452- 4
TR05	SOIF	419-102
TR5	SOIF	458- 91
TR6	SOIF	465- 20
TR7	SOIF	471- 12
TR8	SOIF	475- 6
TR9	SOIF	479- 75
TR10	SOIF	482- 38
TR11	SOIF	485- 90
TR12	SOIF	487- 75
TR50△	TEC	296-105
TR53	TEC	297- 69
TR100△	TEC	304- 95
TR103	TEC	305- 86
TR150△	TEC	308- 32
TR152	TEC	308- 52
TR153	TEC	308- 68
TR200	TEC	316- 20
TR203	TEC	317- 26
TR252	TEC	319- 61
TR253	TEC	319- 71
TR302	TEC	325- 30
TR303	TEC	325- 68
TR322	TEC	297- 55
TR323	TEC	305- 62
TR324	TEC	316-110
TR325	TEC	325- 46
TR326	TEC	336- 19
TR352	TEC	327- 72
TR353	TEC	327- 82
TR402	TEC	335-101
TR403	TEC	336- 47
TR501	TEC	342- 94
TR502	TEC	343- 78
TR503	TEC	343-106
TR515S	SOIF	419-103
TR601	TEC	351- 59
TR602	TEC	352- 87
TR603	TEC	353- 19
TR1010	SOIF	482- 21
TR1015S	SOIF	426- 86
TR1110	SOIF	485- 84
TR1120	TEC	296- 75
TR1121	TEC	304- 51
TR1122	TEC	315- 80
TR1123	TEC	324- 67
TR1124	TEC	334- 87
TR1125	TEC	343- 15
TR1126	TEC	351- 95
TR1128	TEC	364- 26
TR1130	TEC	373-110
TR1210	SOIF	487- 69
TR2015S	SOIF	436- 12
TR3015S	SOIF	444- 45
TR4015S	SOIF	452- 5
TR6010	SOIF	464- 45
TR7010	SOIF	471- 1
TR8010	SOIF	474- 73
TR9010	SOIF	479- 68
TRA1	SOIF	425- 32
TRA1D	SOIF	425- 33
TRA2	SOIF	434- 52
TRA2D	SOIF	434- 53
TRA3	SOIF	443- 48
TRA3D	SOIF	443- 49
TRA4	SOIF	450- 48
TRA4D	SOIF	450- 49
TRA05	SOIF	419- 12
TRA05D	SOIF	419- 13
TRA11	SOIF	426- 3
TRA11D	SOIF	426- 4
TRA12	SOIF	435- 34
TRA12D	SOIF	435- 35
TRA13	SOIF	443-102
TRA13D	SOIF	443-103
TRA14	SOIF	451- 33
TRA14D	SOIF	451- 34
TRA21	SOIF	426- 87
TRA21D	SOIF	426- 88
TRA22	SOIF	436- 13
TRA22D	SOIF	436- 14
TRA23	SOIF	444- 46
TRA23D	SOIF	444- 47
TRA24	SOIF	452- 6
TRA24D	SOIF	452- 7
TRA71	SOIF	424- 96
TRA71D	SOIF	424- 97
TRA72	SOIF	433-108
TRA72D	SOIF	433-109
TRA73	SOIF	443- 16
TRA73D	SOIF	443- 17
TRA74	SOIF	449-106
TRA74D	SOIF	449-107
TRA105	SOIF	419- 61
TRA105D	SOIF	419- 62
TRA205	SOIF	419-104
TRA205D	SOIF	419-105
TRA705	SOIF	418- 82
TRA705D	SOIF	418- 83
TRAL110	SOIF	502- 64
TRAL110D	SOIF	502- 65

△-Registered with JEDEC by this manufacturer

♦-Copy of mfr's data sheet may be ordered from D.A.T.A.

1. TYPE No. CROSS INDEX

IN TYPE NUMBER SEQUENCE

TYPE No.	MFRS	Pg&Line
TRAL220	SOIF	505 - 56
TRAL220D	SOIF	505 - 57
TRC6-050A	AEIL	499 - 48
TRC6-050B	AEIL	499 - 49
TRC6-100A	AEIL	499 - 93
TRC6-100B	AEIL	499 - 94
TRC6-200A	AEIL	501 - 9
TRC6-200B	AEIL	501 - 10
TRC6-400A	AEIL	504 - 6
TRC6-400B	AEIL	504 - 7
TRC6-500A	AEIL	506 - 13
TRC6-500B	AEIL	506 - 14
TRC6-600A	AEIL	507 - 34
TRC6-600B	AEIL	507 - 35
TRC10-050A	AEIL	499 - 52
TRC10-050B	AEIL	499 - 53
TRC10-100A	AEIL	499 - 98
TRC10-100B	AEIL	499 - 99
TRC10-200A	AEIL	501 - 38
TRC10-200B	AEIL	501 - 39
TRC10-400A	AEIL	504 - 35
TRC10-400B	AEIL	504 - 36
TRC10-500A	AEIL	506 - 36
TRC10-500B	AEIL	506 - 37
TRC10-600A	AEIL	507 - 45
TRC10-600B	AEIL	507 - 46
TRC15-050A	AEIL	499 - 56
TRC15-050B	AEIL	499 - 57
TRC15-100A	AEIL	499 -102
TRC15-100B	AEIL	499 -103
TRC15-200A	AEIL	501 - 72
TRC15-200B	AEIL	501 - 73
TRC15-400A	AEIL	504 - 69
TRC15-400B	AEIL	504 - 70
TRC15-500A	AEIL	506 - 68
TRC15-500B	AEIL	506 - 69
TRC15-600A	AEIL	507 - 62
TRC15-600B	AEIL	507 - 63
TS1	DII	300 - 13
TS2	DII	310 - 97
TS4	DII	329 - 70
TS05	DII	293 - 65
TS6	DII	346 -102
TS8	DII	359 -109
TS035	SOIF	420 - 32
TS135	SOIF	427 - 41
TS235	SOIF	436 - 83
TS335	SOIF	444 - 96
TS435	SOIF	452 - 77
TS535	SOIF	459 - 38
TS635	SOIF	465 - 89
TS735	SOIF	471 - 30
TS835	SOIF	475 - 51
TS935	SOIF	479 - 84
TS1035	SOIF	482 - 57
TS1135	SOIF	485 - 97
TS1235	SOIF	487 - 89
TT1	SOIF	428 - 94
TT1FA	SOIF	428 - 48
TT1FB	SOIF	428 - 49
TT2	SOIF	438 -104
TT2FA	SOIF	438 - 29
TT2FB	SOIF	438 - 30
TT3	SOIF	446 - 87
TT3FA	SOIF	446 - 28
TT3FB	SOIF	446 - 29
TT4	SOIF	455 - 19
TT4FA	SOIF	454 - 51
TT4FB	SOIF	454 - 52
TT05	SOIF	421 - 17
TT5	SOIF	461 - 37
TT5FA	SOIF	460 - 73
TT5FB	SOIF	460 - 74
TT6	SOIF	468 - 85
TT6FA	SOIF	467 - 81
TT6FB	SOIF	467 - 82
TT7	SOIF	472 - 30
TT7FA	SOIF	472 - 27
TT7FB	SOIF	472 - 28
TT8	SOIF	477 - 83
TT8FA	SOIF	476 -107
TT8FB	SOIF	476 -108
TT9	SOIF	480 - 69
TT9FA	SOIF	480 - 67
TT9FB	SOIF	480 - 68
TT10	SOIF	483 - 72
TT10FA	SOIF	483 - 70
TT10FB	SOIF	483 - 71
TT11	SOIF	486 - 61
TT12	SOIF	488 - 80
TT13	SOIF	490 -100
TT14	SOIF	492 - 21
TT15	SOIF	493 - 12
TT16	SOIF	493 - 67
TT205	SOIF	421 - 33
TT210	SOIF	429 - 24
TT210FA	SOIF	428 -101
TT210FB	SOIF	428 -102
TT220	SOIF	439 - 63
TT220FA	SOIF	439 - 1
TT220FB	SOIF	439 - 2
TT230	SOIF	447 - 23
TT230FA	SOIF	446 - 94
TT230FB	SOIF	446 - 95
TT240	SOIF	455 - 91
TT240FA	SOIF	455 - 26
TT240FB	SOIF	455 - 27
TT250	SOIF	461 - 85
TT250FA	SOIF	461 - 44
TT250FB	SOIF	461 - 45
TT260	SOIF	469 - 57
TT260FA	SOIF	468 - 91
TT260FB	SOIF	468 - 92
TT270	SOIF	473 - 3

TYPE No	MFRS	Pg&Line
TT270FA	SOIF	472 - 82
TT270FB	SOIF	472 - 83
TT280	SOIF	478 - 43
TT280FA	SOIF	477 - 87
TT280FB	SOIF	477 - 88
TT290	SOIF	481 - 11
TT290FA	SOIF	481 - 14
TT290FB	SOIF	481 - 15
TT310	SOIF	429 - 11
TT320	SOIF	439 - 36
TT330	SOIF	447 - 6
TT340	SOIF	455 - 62
TT350	SOIF	461 - 67
TT360	SOIF	469 - 23
TT370	SOIF	472 -100
TT380	SOIF	478 - 17
TT390	SOIF	481 - 30
TT2100	SOIF	484 - 34
TT2100FA	SOIF	484 - 38
TT2100FB	SOIF	484 - 39
TT2110	SOIF	486 - 94
TT2120	SOIF	489 - 23
TT2130	SOIF	491 - 27
TT2140	SOIF	492 - 37
TT2150	SOIF	493 - 16
TT2160	SOIF	493 - 80
TT3100	SOIF	484 - 72
TT3110	SOIF	486 -107
TT3120	SOIF	489 - 53
TT3130	SOIF	491 - 37
TT3140	SOIF	492 - 55
TT3150	SOIF	493 - 20
TT3160	SOIF	493 - 93
TU1B	SHWG	581 - 56
TU10/1	SHWG	567 - 90
TU10/2	SHWG	567 - 91
TU11/1	SHWG	569 - 57
TU11/2	SHWG	569 - 58
TU12/1	SHWG	571 - 52
TU12/2	SHWG	571 - 53
TU13/1	SHWG	572 - 21
TU13/2	SHWG	572 - 22
TU14/1	SHWG	572 - 83
TU14/2	SHWG	572 - 84
TU101	SHWG	567 - 97
TU102	SHWG	569 - 60
TU105	SHWG	571 - 54
TU110	SHWG	572 - 23
TVA12W1100K	SAKJ	582 - 12
TVA12W1120K	SAKJ	582 - 13
TVA12W1140K	SAKJ	582 - 14
TVA12W1160K	SAKJ	582 - 15
TVH3W250M	SAKJ	582 - 16
TVH3W265M	SAKJ	582 - 17
TVH3W280M	SAKJ	582 - 18
TVH3W2100M	SAKJ	582 - 19
TVH3W2120M	SAKJ	582 - 20
TVH3W2150L	SAKJ	582 - 21
TVH3W2180L	SAKJ	582 - 22
TVH3W2220L	SAKJ	582 - 23
TVH3W2270L	SAKJ	582 - 24
TVHD3/2D2100L	SAKJ	582 - 25
TVHD3/2D2120L	SAKJ	582 - 26
TVHD3/2D2140L	SAKJ	582 - 27
TVHS1R3110M	SAKJ	582 - 28
TVHS1R3150M	SAKJ	582 - 29
TVHS1R3200L	SAKJ	582 - 30
TVHS1R3260L	SAKJ	582 - 31
TVHS1R3330L	SAKJ	582 - 32
TVHS1R3400K	SAKJ	582 - 33
TVHS1R3480K	SAKJ	582 - 34
TVHS1R3580K	SAKJ	582 - 35
TVHS1R3700K	SAKJ	582 - 36
TVHS1R3840K	SAKJ	582 - 37
TVHS1R31100K	SAKJ	582 - 38
TVHS1R31300K	SAKJ	582 - 39
TVK1D24M	SAKJ	582 - 40
TVK1D25M	SAKJ	582 - 41
TVK1D26M	SAKJ	582 - 42
TVK1D28M	SAKJ	582 - 43
TVK1D210M	SAKJ	582 - 44
TVK1D212M	SAKJ	582 - 45
TVL3/4D210M	SAKJ	582 - 46
TVL3/4D212M	SAKJ	582 - 47
TVL3/4D215L	SAKJ	582 - 48
TVL3/4D220L	SAKJ	582 - 49
TVL3/4D227L	SAKJ	582 - 50
TVL3/4D235L	SAKJ	582 - 51
TVL3/4D3100M	SAKJ	582 - 52
TVL3/4D350M	SAKJ	582 - 53
TVL3/4D365M	SAKJ	582 - 54
TVL3/4D380M	SAKJ	582 - 55
TVM1D246L	SAKJ	582 - 56
TVM1D256L	SAKJ	582 - 57
TVM1D267L	SAKJ	582 - 58
TVM1D279L	SAKJ	582 - 59
TVM1D292L	SAKJ	582 - 60
TVM1D2108L	SAKJ	582 - 61
TVS1/2D210M	SAKJ	582 - 62
TVS1/2D213M	SAKJ	582 - 63
TVS1/2D218M	SAKJ	582 - 64
TVS1/2D222M	SAKJ	582 - 65
TVS1/2D227M	SAKJ	582 - 66
TVS1/2D233M	SAKJ	582 - 67
TVS1/2D25M	SAKJ	582 - 68
TVS1/2D27M	SAKJ	582 - 69
TW6N100C	AEGG	425 - 41
TW6N100H	AEGG	425 - 42
TW6N200C	AEGG	434 - 60
TW6N200H	AEGG	434 - 61
TW6N300C	AEGG	443 - 54
TW6N300H	AEGG	443 - 55
TW6N400C	AEGG	450 - 56
TW6N400H	AEGG	450 - 57

TYPE No.	MFRS	Pg&Line
TW6N500C	AEGG	457 - 94
TW6N500H	AEGG	457 - 95
TW6N600C	AEGG	463 - 91
TW6N600H	AEGG	463 - 92
TW8N100C	AEGG	425 - 98
TW8N100H	AEGG	425 - 99
TW8N200C	AEGG	435 - 16
TW8N200H	AEGG	435 - 17
TW8N300C	AEGG	443 - 89
TW8N300H	AEGG	443 - 90
TW8N400C	AEGG	451 - 12
TW8N400H	AEGG	451 - 13
TW8N500C	AEGG	458 - 19
TW8N500H	AEGG	458 - 20
TW8N600C	AEGG	464 - 30
TW8N600H	AEGG	464 - 31
TW10N100C	AEGG	426 - 39
TW10N100H	AEGG	426 - 40
TW10N200C	AEGG	435 - 73
TW10N200H	AEGG	435 - 74
TW10N300C	AEGG	444 - 16
TW10N300H	AEGG	444 - 17
TW10N400C	AEGG	451 - 70
TW10N400H	AEGG	451 - 71
TW10N500C	AEGG	458 - 57
TW10N500H	AEGG	458 - 58
TW10N600C	AEGG	464 - 83
TW10N600H	AEGG	464 - 84
TXC01A10	SHWG	499 - 95
TXC01A20	SHWG	501 - 11
TXC01A40	SHWG	504 - 8
TXC01A50	SHWG	506 - 15
TXC01A60	SHWG	507 - 36
TXC02A10	SHWG	499 - 87
TXC02A20	SHWG	500 - 80
TXC02A40	SHWG	503 - 77
TXC02A50	SHWG	505 -102
TXC02A60	SHWG	507 - 25
TXD98A20	SHWG	501 - 74
TXD98A40	SHWG	504 - 71
TXD98A50	SHWG	506 - 70
TXD99A20	SHWG	501 - 40
TXD99A40	SHWG	504 - 37
TXD99A50	SHWG	506 - 38
TXE99A20	SHWG	501 - 94
TXE99A40	SHWG	504 - 91
TXE99A50	SHWG	506 - 88
TY120SP8K2	♦ASEA	478 - 9
TY120SP10K2	♦ASEA	484 - 64
TY120SP12K2	♦ASEA	489 - 47
TY120SP14K2	♦ASEA	492 - 51
TY120SP16K2	♦ASEA	493 - 92
TY120SP18K2	♦ASEA	494 - 57
TY180NP2K2	♦ASEA	439 - 76
TY180NP3K2	♦ASEA	447 - 35
TY180NP4K2	♦ASEA	455 -104
TY180NP5K2	♦ASEA	461 - 97
TY180NP6K2	♦ASEA	469 - 72
TY180NP7K2	♦ASEA	473 - 11
TY180NP8K2	♦ASEA	478 - 58
TY180QP2K2	♦ASEA	439 - 77
TY180QP3K2	♦ASEA	447 - 36
TY180QP4K2	♦ASEA	455 -105
TY180QP5K2	♦ASEA	461 - 98
TY180QP6K2	♦ASEA	469 - 73
TY180QP7K2	♦ASEA	473 - 12
TY180QP8K2	♦ASEA	478 - 59
TY290SP8K2	♦ASEA	478 - 77
TY290SP10K2	♦ASEA	485 - 9
TY290SP12K2	♦ASEA	489 - 93
TY290SP14K2	♦ASEA	492 - 79
TY290SP16K2	♦ASEA	494 - 5
TY290SP18K2	♦ASEA	494 - 69
TY490SP8K2	♦ASEA	478 -102
TY490SP10K2	♦ASEA	485 - 35
TY490SP12K2	♦ASEA	490 - 7
TY490SP14K2	♦ASEA	492 - 90
TY490SP16K2	♦ASEA	494 - 17
TY490SP18K2	♦ASEA	494 - 79
TY500SP8K2	♦ASEA	479 - 23
TY500SP10K2	♦ASEA	485 - 65
TY500SP12K2	♦ASEA	490 - 34
TY500SP14K2	♦ASEA	492 -105
TY500SP16K2	♦ASEA	494 - 24
TY500SP18K2	♦ASEA	494 - 82
TYA290SP8K2	♦ASEA	478 - 78
TYA290SP10K2	♦ASEA	485 - 10
TYA290SP12K2	♦ASEA	489 - 94
TYA290SP14K2	♦ASEA	492 - 80
TYA290SP16K2	♦ASEA	494 - 6
TYA290SP18K2	♦ASEA	494 - 70
TYA490SP8K2	♦ASEA	478 -103
TYA490SP10K2	♦ASEA	485 - 36
TYA490SP12K2	♦ASEA	490 - 8
TYA490SP14K2	♦ASEA	492 - 91
TYA490SP16K2	♦ASEA	494 - 18
TYA490SP18K2	♦ASEA	494 - 80
TYC300SP8K2	♦ASEA	479 - 22
TYC300SP10K2	♦ASEA	485 - 64
TYC300SP12K2	♦ASEA	490 - 33
TYC300SP14K2	♦ASEA	492 -104
TYC300SP16K2	♦ASEA	494 - 23
TYC300SP18K2	♦ASEA	494 - 81
TZ6 8,A,B,D	PWC	178 - 17
TZ6.8C	PWC	178 - 18
TZ7 5,A,B,D	PWC	180 - 61
TZ7 5C	PWC	180 - 62
TZ8.2,A,B,D	PWC	182 -111
TZ8.2C	PWC	182 -112
TZ9.1,A,B,D	PWC	186 - 42
TZ9 1C	PWC	186 - 43
TZ10,A,B,D	PWC	188 -125
TZ10C	PWC	188 -126
TZ11,A,B,D	PWC	190 -115

TYPE No.	MFRS	Pg&Line
TZ11C	PWC	190 -116
TZ12,A,B,D	PWC	193 - 15
TZ12C	PWC	193 - 16
TZ13,A,B,D	PWC	195 - 52
TZ13C	PWC	195 - 53
TZ14,A,B,D	PWC	196 - 89
TZ14C	PWC	196 - 90
TZ15,A,B,D	PWC	198 - 21
TZ15C	PWC	198 - 22
TZ16,A,B,D	PWC	200 - 1
TZ16C	PWC	200 - 2
TZ17,A,B,D	PWC	201 - 37
TZ17C	PWC	201 - 38
TZ18,A,B,D	PWC	202 -113
TZ18C	PWC	202 -114
TZ19,A,B,D	PWC	203 -176
TZ19C	PWC	203 -177
TZ20,A,B,D	PWC	205 - 54
TZ20C	PWC	205 - 55
TZ22,A,B,D	PWC	207 - 37
TZ22C	PWC	207 - 38
TZ24,A,B,D	PWC	209 - 20
TZ24C	PWC	209 - 21
TZ25,A,B,D	PWC	210 - 43
TZ25C	PWC	210 - 44
TZ27,A,B,D	PWC	211 -102
TZ27C	PWC	211 -103
TZ30,A,B,D	PWC	213 -100
TZ30C	PWC	213 -101
TZ33,A,B,D	PWC	215 - 67
TZ33C	PWC	215 - 68
TZ36,A,B,D	PWC	216 -169
TZ36C	PWC	216 -170
TZ39,A,B,D	PWC	218 - 68
TZ39C	PWC	218 - 69
TZ43,A,B,D	PWC	219 -144
TZ43C	PWC	219 -145
TZ45,A,B,D	PWC	220 - 95
TZ45C	PWC	220 - 96
TZ47,A,B,D	PWC	221 - 85
TZ47C	PWC	221 - 86
TZ50,A,B,D	PWC	222 - 65
TZ50C	PWC	222 - 66
TZ51,A,B,D	PWC	223 - 33
TZ51C	PWC	223 - 34
TZ52,A,B,D	PWC	223 -160
TZ52C	PWC	223 -161
TZ56,A,B,D	PWC	224 -115
TZ56C	PWC	224 -116
TZ62,A,B,D	PWC	226 - 64
TZ62C	PWC	226 - 65
TZ68,A,B,D	PWC	227 -122
TZ68C	PWC	227 -123
TZ75,A,B,D	PWC	229 - 36
TZ75C	PWC	229 - 37
TZ82,A,B,D	PWC	230 -117
TZ82C	PWC	230 -118
TZ91,A,B,D	PWC	232 - 53
TZ91C	PWC	232 - 54
TZ100,A,B,D	PWC	233 - 98
TZ100C	PWC	233 - 99
TZ105,A,B,D	PWC	234 -104
TZ105C	PWC	234 -105
TZ110,A,B,D	PWC	235 - 62
TZ110C	PWC	235 - 63
TZ120,A,B,D	PWC	236 - 86
TZ120C	PWC	236 - 87
TZ130,A,B,D	PWC	237 -123
TZ130C	PWC	237 -124
TZ140,A,B,D	PWC	238 -112
TZ140C	PWC	238 -113
TZ150,A,B,D	PWC	239 -102
TZ150C	PWC	239 -103
TZ160,A,B,D	PWC	240 -124
TZ160C	PWC	240 -125
TZ175,A,B,D	PWC	241 -123
TZ175C	PWC	241 -124
TZ180,A,B,D	PWC	242 - 65
TZ180C	PWC	242 - 66
TZ200,A,B,D	PWC	243 -105
TZ200C	PWC	243 -106
TZ220,A,B,D	PWC	244 - 41
TZ220C	PWC	244 - 42
TZC6 8,A,B,	D♦SCN	178 -106
TZC6 8C	♦SCN	178 -107
TZC6 8E	♦SCN	178 -108
TZC7.5,A,B,	D♦SCN	180 -149
TZC7 5C	♦SCN	180 -150
TZC7.5E	♦SCN	180 -151
TZC8 2,A,B,	D♦SCN	183 - 17
TZC8 2C	♦SCN	183 - 18
TZC8.2E	♦SCN	183 - 19
TZC9.1,A,B,	D♦SCN	186 -133
TZC9 1C	♦SCN	186 -134
TZC9 1E	♦SCN	186 -135
TZC10,A,B,D	♦SCN	189 - 31
TZC10C	♦SCN	189 - 32
TZC10E	♦SCN	189 - 33
TZC11,A,B,D	♦SCN	191 - 16
TZC11C	♦SCN	191 - 17
TZC11E	♦SCN	191 - 18
TZC12,A,B,D	♦SCN	193 -121
TZC12C	♦SCN	193 -122
TZC12E	♦SCN	193 -123
TZC13,A,B,D	♦SCN	195 -144
TZC13C	♦SCN	195 -145
TZC13E	♦SCN	195 -146
TZC14,A,B,D	♦SCN	196 -136
TZC14C	♦SCN	196 -137
TZC14E	♦SCN	196 -138
TZC15,A,B,D	♦SCN	198 -121
TZC15C	♦SCN	198 -122
TZC15E	♦SCN	198 -123
TZC17,A,B,D	♦SCN	201 - 61

TYPE No.	MFRS	Pg&Line
TZC17C	♦SCN	201 - 62
TZC17E	♦SCN	201 - 63
TZC18,A,B,D	♦SCN	203 - 13
TZC18C	♦SCN	203 - 14
TZC18E	♦SCN	203 - 15
TZC19,A,B,D	♦SCN	204 - 20
TZC19C	♦SCN	204 - 21
TZC19E	♦SCN	204 - 22
TZC20,A,B,D	♦SCN	205 -150
TZC20C	♦SCN	205 -151
TZC20E	♦SCN	205 -152
TZC22,A,B,D	♦SCN	207 -136
TZC22C	♦SCN	207 -137
TZC22E	♦SCN	207 -138
TZC24,A,B,D	♦SCN	209 -111
TZC24C	♦SCN	209 -112
TZC24E	♦SCN	209 -113
TZC25,A,B,D	♦SCN	210 - 66
TZC25C	♦SCN	210 - 67
TZC25E	♦SCN	210 - 68
TZC27,A,B,D	♦SCN	212 - 7
TZC27C	♦SCN	212 - 8
TZC27E	♦SCN	212 - 9
TZC30,A,B,D	♦SCN	214 - 11
TZC30C	♦SCN	214 - 12
TZC30E	♦SCN	214 - 13
TZC33,A,B,D	♦SCN	215 -168
TZC33C	♦SCN	215 -169
TZC33E	♦SCN	215 -170
TZC36,A,B,D	♦SCN	217 - 61
TZC36C	♦SCN	217 - 62
TZC36E	♦SCN	217 - 63
TZC39,A,B,D	♦SCN	218 -133
TZC39C	♦SCN	218 -134
TZC39E	♦SCN	218 -135
TZC43,A,B,D	♦SCN	220 - 25
TZC43C	♦SCN	220 - 26
TZC43E	♦SCN	220 - 27
TZC45,A,B,D	♦SCN	220 -130
TZC45C	♦SCN	220 -131
TZC45E	♦SCN	220 -132
TZC47,A,B,D	♦SCN	221 -156
TZC47C	♦SCN	221 -157
TZC47E	♦SCN	221 -158
TZC50,A,B,D	♦SCN	222 -101
TZC50C	♦SCN	222 -102
TZC50E	♦SCN	222 -103
TZC51,A,B,D	♦SCN	223 - 96
TZC51C	♦SCN	223 - 97
TZC51E	♦SCN	223 - 98
TZC52,A,B,D	♦SCN	223 -179
TZC52C	♦SCN	223 -180
TZC52E	♦SCN	223 -181
TZC56,A,B,D	♦SCN	225 - 10
TZC56C	♦SCN	225 - 11
TZC56E	♦SCN	225 - 12
TZC62,A,B,D	♦SCN	226 -128
TZC62C	♦SCN	226 -129
TZC62E	♦SCN	226 -130
TZC68,A,B,D	♦SCN	228 - 9
TZC68C	♦SCN	228 - 10
TZC68E	♦SCN	228 - 11
TZC75,A,B,D	♦SCN	229 -109
TZC75C	♦SCN	229 -110
TZC75E	♦SCN	229 -111
TZC82,A,B,D	♦SCN	230 -181
TZC82C	♦SCN	230 -182
TZC82E	♦SCN	231 - 1
TZC91,A,B,D	♦SCN	232 -112
TZC91C	♦SCN	232 -113
TZC91E	♦SCN	232 -114
TZC100,A,B,	D♦SCN	233 -172
TZC100C	♦SCN	233 -173
TZC100E	♦SCN	233 -174
TZC105,A,B,	D♦SCN	234 -125
TZC105C	♦SCN	234 -126
TZC105E	♦SCN	234 -127
TZC110,A,B,	D♦SCN	235 -121
TZC110C	♦SCN	235 -122
TZC110E	♦SCN	235 -123
TZC120,A,B,	D♦SCN	236 -154
TZC120C	♦SCN	236 -155
TZC120E	♦SCN	236 -156
TZC130,A,B,	D♦SCN	238 - 12
TZC130C	♦SCN	238 - 13
TZC130E	♦SCN	238 - 14
TZC140,A,B,	D♦SCN	238 -152
TZC140C	♦SCN	238 -153
TZC140E	♦SCN	238 -154
TZC150,A,B,	D♦SCN	239 -167
TZC150C	♦SCN	239 -168
TZC150E	♦SCN	239 -169
TZC160,A,B,	D♦SCN	241 - 10
TZC160C	♦SCN	241 - 11
TZC160E	♦SCN	241 - 12
TZC180,A,B,	D♦SCN	242 -127
TZC180C	♦SCN	242 -128
TZC180E	♦SCN	242 -129
TZC200,A,B,	D♦SCN	243 -164
TZC200C	♦SCN	243 -165
TZC200E	♦SCN	243 -166
T 75F50	EBRG	418 - 6
T 75F100	EBRG	423 - 94
T.75F200	EBRG	432 - 87
T.75F400	EBRG	448 -109
U1001	♦CRL	581 - 57
U1002	♦CRL	581 - 58
U1003	♦CRL	581 - 59
U1004	♦CRL	581 - 60
U1005	♦CRL	581 - 61
U1006	♦CRL	581 - 62
U1007	♦CRL	581 - 63
U1008	♦CRL	581 - 64
U1009	♦CRL	581 - 65

Δ-Registered with JEDEC by this manufacturer

♦-Copy of mfr's data sheet may be ordered from D.A.T.A.

1. TYPE No. CROSS INDEX

IN TYPE NUMBER SEQUENCE

TYPE No.	MFRS	Pg&Line
U1010	♦CRL	581- 66
UCR10	♦UNI	426- 43
UCR10L	♦UNI	424- 56
UCR20	♦UNI	435- 79
UCR20L	♦UNI	433- 56
UCR30	♦UNI	444- 22
UCR30L	♦UNI	442- 99
UCR40	♦UNI	451- 74
UCR40L	♦UNI	449- 62
UCR50	♦UNI	458- 63
UCR50L	♦UNI	457- 40
UCR60	♦UNI	464- 91
UCR60L	♦UNI	463- 10
UDC5	♦UNI	289- 99
UDC7.5	♦UNI	290- 44
UDC10	♦UNI	290- 97
UDC15	♦UNI	291- 24
UDD2.5	♦UNI	289- 21
UDD5	♦UNI	289-100
UDD7.5	♦UNI	290- 45
UDE2.5	♦UNI	392- 73
UDE5	♦UNI	400- 22
UDF2 5	♦UNI	289- 22
UDF5	♦UNI	289-101
UFSD1	♦SAKJ	285- 75
UFSD1A	♦SAKJ	287- 15
UFSD1B	♦SAKJ	287- 90
UFSD1C	♦SAKJ	288- 30
UGB5	♦UNI	400- 20
UGB7 5	♦UNI	403- 22
UGB10	♦UNI	406- 55
UGD5	♦UNI	289-102
UGD7 5	♦UNI	290- 46
UGD10	♦UNI	290- 98
UGF2 5	♦UNI	289- 23
UGF5	♦UNI	289-103
UGF7 5	♦UNI	290- 47
UM2010A	♦UNI	591- 63
UM2010B	♦UNI	591- 64
UM2010C	♦UNI	591- 65
UM2012A	♦UNI	591- 66
UM2012B	♦UNI	591- 67
UM2012C	♦UNI	591- 68
UM2014A	♦UNI	591- 69
UM2014B	♦UNI	591- 70
UM2014C	♦UNI	591- 71
UM2016A	♦UNI	591- 72
UM2016B	♦UNI	591- 73
UM2016C	♦UNI	591- 74
UM2018A	♦UNI	591- 75
UM2018B	♦UNI	591- 76
UM2018C	♦UNI	591- 77
UM2020A	♦UNI	591- 78
UM2020B	♦UNI	591- 79
UM2020C	♦UNI	591- 80
UM4902A	♦UNI	591- 81
UM4902B	♦UNI	591- 82
UM4902C	♦UNI	591- 83
UM4904A	♦UNI	591- 84
UM4904B	♦UNI	591- 85
UM4904C	♦UNI	591- 86
UM4906A	♦UNI	591- 87
UM4906B	♦UNI	591- 88
UM4906C	♦UNI	591- 89
UM4908A	♦UNI	591- 90
UM4908B	♦UNI	591- 91
UM4908C	♦UNI	591- 92
UM4910A	♦UNI	591- 93
UM4910B	♦UNI	591- 94
UM4910C	♦UNI	591- 95
UM6002A	♦UNI	591- 96
UM6002B	♦UNI	591- 97
UM6002C	♦UNI	591- 98
UM6004A	♦UNI	591- 99
UM6004B	♦UNI	591-100
UM6004C	♦UNI	591-101
UM6006A	♦UNI	591-102
UM6006B	♦UNI	591-103
UM6006C	♦UNI	591-104
UM7002A	♦UNI	591-105
UM7002B	♦UNI	591-106
UM7002C	♦UNI	591-107
UM7004A	♦UNI	591-108
UM7004B	♦UNI	591-109
UM7004C	♦UNI	591-110
UM7006A	♦UNI	592- 1
UM7006B	♦UNI	592- 2
UM7006C	♦UNI	592- 3
UM7008A	♦UNI	592- 4
UM7008B	♦UNI	592- 5
UM7008C	♦UNI	592- 6
UM7010A	♦UNI	592- 7
UM7010B	♦UNI	592- 8
UM7010C	♦UNI	592- 9
UPI2069	UPI	310- 98
UPI2069A	UPI	310- 99
UPI2070	UPI	329- 71
UPI2070A	UPI	329- 72
UPI2071	UPI	346-103
UPI2071A	UPI	346-104
UR105	UNI	294- 9
		592- 69
UR110	UNI	300- 89
		592- 70
UR115	UNI	307- 81
		592- 71
UR120	UNI	311- 73
		592- 72
UR123AA	ITT	296- 76
UR123BA	ITT	304- 52
UR123CA	ITT	308- 22
UR123DA	ITT	315- 81
UR123EA	ITT	319- 47
UR123FA	ITT	324- 68

TYPE No.	MFRS	Pg&Line
UR123HA	ITT	334- 88
UR123KA	ITT	343- 16
UR123MA	ITT	351- 96
UR123PA	ITT	357- 28
UR123RA	ITT	364- 27
UR123VA	ITT	374- 1
UR125	UNI	319- 28
		592- 73
UR205	UNI	295- 21
		592- 74
UR210	UNI	302- 44
		592- 75
UR215	UNI	307-103
		592- 76
UR220	UNI	313- 48
		592- 77
UR225	UNI	319- 32
		592- 78
UR710	♦UNI	592- 79
UR720	♦UNI	592- 80
US12	UNI	378- 30
US15	UNI	384- 79
US18	UNI	388- 13
US20	UNI	390- 12
US25	UNI	392- 62
US30	UNI	394- 51
US35	UNI	395- 78
US40	UNI	397- 21
US45	UNI	398- 27
US50	UNI	399- 76
US60	UNI	401- 13
US70	UNI	402- 37
US80	UNI	403- 68
US100	UNI	405- 85
US120	UNI	407- 25
US123EA	ITT	319- 48
US123GA	ITT	327- 59
US123PA	ITT	357- 29
US123RA	ITT	364- 28
US123VA	ITT	374- 2
US150	UNI	408- 38
US180	UNI	409- 50
US200	UNI	410- 8
USA55191/1	none	271- 3
USA55191/2	none	255- 12
USA55191/3-1	none	174- 71
USA55191/3-2	none	191-159
USA55191/4	none	559- 45
USAF120ES471P	none	284- 68
USAF120ES476P	none	284- 65
USR12	UNI	288- 74
USR15	UNI	288- 96
USR20	UNI	289- 12
USR25	UNI	289- 24
USR30	UNI	289- 48
USR35	UNI	289- 68
USR40	UNI	289- 69
USR45	UNI	289- 71
USR50	UNI	289-104
USR60	UNI	290- 17
USR70	UNI	290- 39
USR80	UNI	290- 65
USR100	UNI	290- 99
USR120	UNI	291- 5
USR150	UNI	291- 25
USR180	UNI	291- 35
UT111	UNI	293- 66
UT112	UNI	300- 14
UT113	UNI	310-100
UT114	UNI	321- 22
UT115	UNI	329- 73
UT117	UNI	339-107
UT118	UNI	346-105
UT119	UNI	359-110
UT120	UNI	370- 47
UT211	UNI	318- 96
UT212	UNI	321- 23
UT213	UNI	329- 74
UT214	UNI	339-108
UT215	UNI	346-106
UT221	UNI	299- 62
UT234	UNI	311- 74
UT235	UNI	330- 55
UT236	UNI	300- 90
UT237	UNI	340- 58
UT238	UNI	347- 86
UT242	UNI	312- 64
UT244	UNI	331- 46
UT245	UNI	340-109
UT247	UNI	348- 70
UT249	UNI	301- 64
UT251	UNI	301- 93
UT252	UNI	312- 91
UT254	UNI	331- 77
UT255	UNI	341- 21
UT257	UNI	348-102
UT258	UNI	361- 68
UT261	UNI	302- 45
UT262	UNI	313- 49
UT264	UNI	332- 35
UT265	UNI	341- 65
UT267	UNI	349- 56
UT268	UNI	362- 11
UT347	UNI	371- 1
UT361	UNI	360- 71
UT362	UNI	361- 40
UT363	UNI	371- 71
UT364	UNI	371- 96
UT2005	UNI	295- 22
UT2010	UNI	302- 46
UT2020	UNI	313- 50
UT2040	UNI	332- 36
UT2060	UNI	349- 57
UT2080	UNI	362- 12

TYPE No	MFRS	Pg&Line
UT3005	UNI	295- 64
UT3010	UNI	302-100
UT3020	UNI	313-110
UT3040	UNI	332-101
UT3060	UNI	350- 8
UT3080	UNI	362- 71
UT4005	UNI	295- 90
UT4020	UNI	314- 45
UT4060	UNI	350- 57
UT4080	UNI	362-110
UT5105	UNI	296- 24
UT5110	UNI	303- 91
UT5120	UNI	315- 1
UT5140	UNI	333-110
UT5160	UNI	351- 17
UT6105	UNI	296- 32
UT6110	UNI	303-103
UT6120	UNI	315- 13
UT6140	UNI	334- 12
UT6160	UNI	351- 25
UT8105	UNI	296- 54
UT8110	UNI	304- 30
UT8120	UNI	315- 57
UT8140	UNI	334- 56
UTR01	UNI	272- 71
UTR02	UNI	272- 72
UTR10	UNI	279- 33
UTR12	UNI	279- 34
UTR20	UNI	282- 98
UTR21	UNI	282- 99
UTR22	UNI	282-100
UTR30	UNI	284- 53
UTR31	UNI	284- 54
UTR32	UNI	284- 55
UTR40	UNI	285- 80
UTR41	UNI	285- 81
UTR50	UNI	286- 54
UTR51	UNI	286- 55
UTR52	UNI	286- 56
UTR60	UNI	287- 28
UTR61	UNI	287- 29
UTR511	UNI	281- 21
UTR512	UNI	272- 2
UTR2305	UNI	272- 73
UTR2310	UNI	279- 35
UTR2320	UNI	282-101
UTR2340	UNI	285- 76
UTR2350	UNI	286- 53
UTR3340	UNI	285- 77
UTR4405	UNI	272- 93
UTR4410	UNI	279- 74
UTR4420	UNI	283- 20
UTR4440	UNI	285- 84
UTR5405	UNI	272- 94
UTR5410	UNI	279- 75
UTR5420	UNI	283- 21
UTR5440	UNI	285- 85
UTR6405	UNI	272- 95
UTR6410	UNI	279- 76
UTR6420	UNI	283- 22
UTR6440	UNI	285- 86
UTX105	UNI	272- 4
UTX110	UNI	278- 64
UTX115	UNI	281- 17
UTX120	UNI	282- 18
UTX125	UNI	283- 98
UTX205	UNI	272- 5
UTX210	UNI	278- 65
UTX215	UNI	281- 18
UTX220	UNI	282- 19
UTX225	UNI	283- 99
UTX3105	UNI	272- 25
UTX3110	UNI	278- 84
UTX3115	UNI	281- 22
UTX3120	UNI	282- 37
UTX4105	UNI	272- 26
UTX4110	UNI	278- 85
UTX4115	UNI	281- 23
UTX4120	UNI	282- 38
UZ3.3	♦INRI	167- 40
UZ3.6	♦INRI	167-187
UZ3.9	♦INRI	168-143
UZ4 3	♦INRI	169-143
UZ4 7	♦INRI	170-146
UZ5 1	♦INRI	171-189
UZ5 6	♦INRI	173- 56
UZ6 2	♦INRI	175- 32
UZ6 8	♦INRI	177-128
UZ7 5	♦INRI	179-176
UZ8 2	♦INRI	182- 43
UZ9 1	♦INRI	185-155
UZ10	♦INRI	188- 43
UZ11	♦INRI	190- 45
UZ12	♦INRI	192-111
UZ13	♦INRI	194-172
UZ15	♦INRI	197-129
UZ16	♦INRI	199-123
UZ18	♦INRI	202- 36
UZ20	♦INRI	204-176
UZ22	♦INRI	206-149
UZ24	♦INRI	208-141
UZ27	♦INRI	211- 32
UZ30	♦INRI	213- 42
UZ33	♦INRI	215- 6
UZ110	UNI	233-148
UZ111	UNI	235-103
UZ112	UNI	236-134
UZ113	UNI	237-164
UZ114	UNI	238-138
UZ115	UNI	239-147
UZ116	UNI	240-162
UZ117	UNI	241- 68
UZ118	UNI	242-108
UZ119	UNI	243- 9

TYPE No.	MFRS	Pg&Line
UZ120	UNI	243-146
UZ122	UNI	244- 57
UZ124	UNI	244- 77
UZ126	UNI	244- 92
UZ128	UNI	244-116
UZ130	UNI	244-130
UZ132	UNI	244-145
UZ134	UNI	244-169
UZ136	UNI	244-183
UZ138	UNI	244-198
UZ140	UNI	245- 21
UZ210	UNI	233-149
UZ211	UNI	235-104
UZ212	UNI	236-135
UZ213	UNI	237-165
UZ214	UNI	238-139
UZ215	UNI	239-148
UZ216	UNI	240-163
UZ217	UNI	241- 69
UZ218	UNI	242-109
UZ219	UNI	243- 10
UZ220	UNI	243-147
UZ222	UNI	244- 58
UZ224	UNI	244- 78
UZ226	UNI	244- 93
UZ228	UNI	244-117
UZ230	UNI	244-131
UZ232	UNI	244-146
UZ234	UNI	244-170
UZ236	UNI	244-184
UZ238	UNI	244-199
UZ240	UNI	245- 22
UZ310	UNI	233-150
UZ311	UNI	235-105
UZ312	UNI	236-136
UZ313	UNI	237-166
UZ314	UNI	238-140
UZ315	UNI	239-149
UZ316	UNI	240-164
UZ317	UNI	241- 70
UZ318	UNI	242-110
UZ319	UNI	243- 11
UZ320	UNI	243-148
UZ322	UNI	244- 59
UZ324	UNI	244- 79
UZ326	UNI	244- 94
UZ328	UNI	244-118
UZ330	UNI	244-132
UZ332	UNI	244-147
UZ334	UNI	244-171
UZ336	UNI	244-185
UZ338	UNI	244-200
UZ340	UNI	245- 23
UZ706	UNI	178- 84
UZ707	UNI	180-127
UZ708	UNI	182-180
UZ709	UNI	186-110
UZ710	UNI	189- 7
UZ712	UNI	193- 96
UZ713	UNI	195-122
UZ714	UNI	196-119
UZ715	UNI	198- 97
UZ716	UNI	200- 69
UZ718	UNI	202-189
UZ720	UNI	205-127
UZ722	UNI	207-112
UZ724	UNI	209- 89
UZ727	UNI	211-179
UZ730	UNI	213-174
UZ733	UNI	215-144
UZ736	UNI	217- 39
UZ740	UNI	219- 4
UZ745	UNI	220-117
UZ750	UNI	222- 88
UZ756	UNI	224-169
UZ760	UNI	225-128
UZ770	UNI	228- 85
UZ775	UNI	229- 87
UZ780	UNI	229-197
UZ790	UNI	231-127
UZ806	UNI	178- 85
UZ807	UNI	180-128
UZ808	UNI	182-181
UZ809	UNI	186-111
UZ810	UNI	189- 8
UZ812	UNI	193- 97
UZ813	UNI	195-123
UZ814	UNI	196-120
UZ815	UNI	198- 98
UZ816	UNI	200- 70
UZ818	UNI	202-190
UZ820	UNI	205-128
UZ822	UNI	207-113
UZ824	UNI	209- 90
UZ827	UNI	211-180
UZ830	UNI	213-175
UZ833	UNI	215-145
UZ836	UNI	217- 40
UZ840	UNI	219- 5
UZ845	UNI	220-118
UZ850	UNI	222- 89
UZ856	UNI	224-170
UZ860	UNI	225-129
UZ870	UNI	228- 86
UZ875	UNI	229- 88
UZ880	UNI	229-198
UZ890	UNI	231-128
UZ906	UNI	178- 86
UZ907	UNI	180-129
UZ908	UNI	182-182
UZ909	UNI	186-112
UZ910	UNI	189- 9
UZ912	UNI	193- 98
UZ913	UNI	195-124

TYPE No.	MFRS	Pg&Line
UZ914	UNI	196-121
UZ915	UNI	198- 99
UZ916	UNI	200- 71
UZ918	UNI	202-191
UZ920	UNI	205-129
UZ922	UNI	207-114
UZ924	UNI	209- 91
UZ927	UNI	211-181
UZ930	UNI	213-176
UZ933	UNI	215-146
UZ936	UNI	217- 41
UZ940	UNI	219- 6
UZ945	UNI	220-119
UZ950	UNI	222- 90
UZ956	UNI	224-171
UZ960	UNI	225-130
UZ970	UNI	228- 87
UZ975	UNI	229- 89
UZ980	UNI	229-199
UZ990	UNI	231-129
UZ4110	♦UNI	234- 6
UZ4111	♦UNI	235-128
UZ4112	♦UNI	236-161
UZ4113	♦UNI	238- 19
UZ4115	♦UNI	240- 4
UZ4116	♦UNI	241- 17
UZ4118	♦UNI	242-134
UZ4120	♦UNI	243-171
UZ4210	♦UNI	234- 7
UZ4211	♦UNI	235-129
UZ4212	♦UNI	236-162
UZ4213	♦UNI	238- 20
UZ4215	♦UNI	240- 5
UZ4216	♦UNI	241- 18
UZ4218	♦UNI	242-135
UZ4220	♦UNI	243-172
UZ4706	♦UNI	178-113
UZ4707	♦UNI	180-156
UZ4708	♦UNI	183- 24
UZ4709	♦UNI	186-140
UZ4710	♦UNI	189- 39
UZ4712	♦UNI	193-129
UZ4713	♦UNI	195-152
UZ4715	♦UNI	198-130
UZ4716	♦UNI	200- 91
UZ4718	♦UNI	203- 22
UZ4720	♦UNI	205-158
UZ4722	♦UNI	207-145
UZ4724	♦UNI	209-119
UZ4727	♦UNI	212- 16
UZ4730	♦UNI	214- 19
UZ4733	♦UNI	215-176
UZ4736	♦UNI	217- 68
UZ4739	♦UNI	218-138
UZ4743	♦UNI	220- 29
UZ4747	♦UNI	221-161
UZ4751	♦UNI	223-100
UZ4756	♦UNI	225- 18
UZ4762	♦UNI	226-132
UZ4768	♦UNI	228- 14
UZ4775	♦UNI	229-116
UZ4782	♦UNI	231- 4
UZ4791	♦UNI	232-116
UZ4806	♦UNI	178-114
UZ4807	♦UNI	180-157
UZ4808	♦UNI	183- 25
UZ4809	♦UNI	186-141
UZ4810	♦UNI	189- 40
UZ4812	♦UNI	193-130
UZ4813	♦UNI	195-153
UZ4815	♦UNI	198-131
UZ4816	♦UNI	200- 92
UZ4818	♦UNI	203- 23
UZ4820	♦UNI	205-159
UZ4822	♦UNI	207-146
UZ4824	♦UNI	209-120
UZ4827	♦UNI	212- 17
UZ4830	♦UNI	214- 20
UZ4833	♦UNI	215-177
UZ4836	♦UNI	217- 69
UZ4839	♦UNI	218-139
UZ4843	♦UNI	220- 30
UZ4847	♦UNI	221-162
UZ4851	♦UNI	223-101
UZ4856	♦UNI	225- 19
UZ4862	♦UNI	226-133
UZ4868	♦UNI	228- 15
UZ4875	♦UNI	229-117
UZ4882	♦UNI	231- 5
UZ4891	♦UNI	232-117
UZ5110	UNI	234- 1
UZ5111	UNI	235-124
UZ5112	UNI	236-157
UZ5113	UNI	238- 15
UZ5114	UNI	238-155
UZ5115	UNI	239-170
UZ5116	UNI	241- 13
UZ5117	UNI	241- 78
UZ5118	UNI	242-130
UZ5119	UNI	243- 19
UZ5120	UNI	243-167
UZ5122	UNI	244- 65
UZ5124	UNI	244- 85
UZ5126	UNI	244- 99
UZ5128	UNI	244-123
UZ5130	UNI	244-138
UZ5132	UNI	244-152
UZ5134	UNI	244-176
UZ5136	UNI	244-191
UZ5138	UNI	245- 2
UZ5140	UNI	245- 28
UZ5210	UNI	234- 2
UZ5211	UNI	235-125
UZ5212	UNI	236-158

△-Registered with JEDEC by this manufacturer

♦-Copy of mfr's data sheet may be ordered from D.A.T.A.

1. TYPE No. CROSS INDEX

IN TYPE NUMBER SEQUENCE

TYPE No	MFRS	Pg&Line
UZ5213	UNI	238- 16
UZ5214	UNI	238-156
UZ5215	UNI	240- 1
UZ5216	UNI	241- 14
UZ5217	UNI	241- 79
UZ5218	UNI	242-131
UZ5219	UNI	243- 20
UZ5220	UNI	243-168
UZ5222	UNI	244- 66
UZ5224	UNI	244- 86
UZ5226	UNI	244-100
UZ5228	UNI	244-124
UZ5230	UNI	244-139
UZ5232	UNI	244-153
UZ5234	UNI	244-177
UZ5236	UNI	244-192
UZ5238	UNI	245- 3
UZ5240	UNI	245- 29
UZ5310	UNI	234- 3
UZ5311	UNI	235-126
UZ5312	UNI	236-159
UZ5313	UNI	238- 17
UZ5314	UNI	238-157
UZ5315	UNI	240- 2
UZ5316	UNI	241- 15
UZ5317	UNI	241- 80
UZ5318	UNI	242-132
UZ5319	UNI	243- 21
UZ5320	UNI	243-169
UZ5322	UNI	244- 67
UZ5324	UNI	244- 87
UZ5326	UNI	244-101
UZ5328	UNI	244-125
UZ5330	UNI	244-140
UZ5332	UNI	244-154
UZ5334	UNI	244-178
UZ5336	UNI	244-193
UZ5338	UNI	245- 4
UZ5340	UNI	245- 30
UZ5706	UNI	178-109
UZ5707	UNI	180-152
UZ5708	UNI	183- 20
UZ5709	UNI	186-136
UZ5710	UNI	189- 34
UZ5712	UNI	193-124
UZ5713	UNI	195-147
UZ5714	UNI	196-139
UZ5715	UNI	198-124
UZ5716	UNI	200- 87
UZ5718	UNI	203- 16
UZ5720	UNI	205-153
UZ5722	UNI	207-139
UZ5724	UNI	209-114
UZ5727	UNI	212- 10
UZ5730	UNI	214- 14
UZ5733	UNI	215-171
UZ5736	UNI	217- 64
UZ5740	UNI	219- 13
UZ5745	UNI	220-133
UZ5750	UNI	222-104
UZ5756	UNI	225- 13
UZ5760	UNI	225-141
UZ5770	UNI	228- 94
UZ5775	UNI	229-112
UZ5780	UNI	230- 5
UZ5790	UNI	231-136
UZ5806	UNI	178-110
UZ5807	UNI	180-153
UZ5808	UNI	183- 21
UZ5809	UNI	186-137
UZ5810	UNI	189- 35
UZ5812	UNI	193-125
UZ5813	UNI	195-148
UZ5814	UNI	196-140
UZ5815	UNI	198-125
UZ5816	UNI	200- 88
UZ5818	UNI	203- 17
UZ5820	UNI	205-154
UZ5822	UNI	207-140
UZ5824	UNI	209-115
UZ5827	UNI	212- 11
UZ5830	UNI	214- 15
UZ5833	UNI	215-172
UZ5836	UNI	217- 65
UZ5840	UNI	219- 14
UZ5845	UNI	220-134
UZ5850	UNI	222-105
UZ5856	UNI	225- 14
UZ5860	UNI	225-142
UZ5870	UNI	228- 95
UZ5875	UNI	229-113
UZ5880	UNI	230- 6
UZ5890	UNI	231-137
UZ5906	UNI	178-111
UZ5907	UNI	180-154
UZ5908	UNI	183- 22
UZ5909	UNI	186-138
UZ5910	UNI	189- 36
UZ5912	UNI	193-126
UZ5913	UNI	195-149
UZ5914	UNI	196-141
UZ5915	UNI	198-126
UZ5916	UNI	200- 89
UZ5918	UNI	203- 18
UZ5920	UNI	205-155
UZ5922	UNI	207-141
UZ5924	UNI	209-116
UZ5927	UNI	212- 12
UZ5930	UNI	214- 16
UZ5933	UNI	215-173
UZ5936	UNI	217- 66
UZ5940	UNI	219- 15
UZ5945	UNI	220-135
UZ5950	UNI	222-106

TYPE No.	MFRS	Pg&Line
UZ5956	UNI	225- 15
UZ5960	UNI	225-143
UZ5970	UNI	228- 96
UZ5975	UNI	229-114
UZ5980	UNI	230- 7
UZ5990	UNI	231-138
UZ7110	UNI	234- 35
UZ7210	UNI	234- 36
UZ7310	UNI	234- 37
UZ7706	UNI	178-137
UZ7707	UNI	180-180
UZ7708	UNI	183- 50
UZ7709	UNI	186-160
UZ7710	UNI	189- 72
UZ7712	UNI	193-164
UZ7713	UNI	195-179
UZ7714	UNI	196-149
UZ7715	UNI	198-166
UZ7716	UNI	200-120
UZ7718	UNI	203- 59
UZ7720	UNI	205-188
UZ7722	UNI	207-181
UZ7724	UNI	209-148
UZ7727	UNI	212- 50
UZ7730	UNI	214- 46
UZ7733	UNI	216- 5
UZ7736	UNI	217- 92
UZ7740	UNI	219- 18
UZ7745	UNI	220-141
UZ7750	UNI	222-111
UZ7756	UNI	225- 46
UZ7760	UNI	225-145
UZ7770	UNI	228- 98
UZ7775	UNI	229-140
UZ7780	UNI	230- 9
UZ7790	UNI	231-140
UZ7806	UNI	178-138
UZ7807	UNI	180-181
UZ7808	UNI	183- 51
UZ7809	UNI	186-161
UZ7810	UNI	189- 73
UZ7812	UNI	193-165
UZ7813	UNI	195-180
UZ7814	UNI	196-150
UZ7815	UNI	198-167
UZ7816	UNI	200-121
UZ7818	UNI	203- 60
UZ7820	UNI	205-189
UZ7822	UNI	207-182
UZ7824	UNI	209-149
UZ7827	UNI	212- 51
UZ7830	UNI	214- 47
UZ7833	UNI	216- 6
UZ7836	UNI	217- 93
UZ7840	UNI	219- 19
UZ7845	UNI	220-142
UZ7850	UNI	222-112
UZ7856	UNI	225- 47
UZ7860	UNI	225-146
UZ7870	UNI	228- 99
UZ7875	UNI	229-141
UZ7880	UNI	230- 10
UZ7890	UNI	231-141
UZ7906	UNI	178-139
UZ7907	UNI	180-182
UZ7908	UNI	183- 52
UZ7909	UNI	186-162
UZ7910	UNI	189- 74
UZ7912	UNI	193-166
UZ7913	UNI	195-181
UZ7914	UNI	196-151
UZ7915	UNI	198-168
UZ7916	UNI	200-122
UZ7918	UNI	203- 61
UZ7920	UNI	205-190
UZ7922	UNI	207-183
UZ7924	UNI	209-150
UZ7927	UNI	212- 52
UZ7930	UNI	214- 48
UZ7933	UNI	216- 7
UZ7936	UNI	217- 94
UZ7940	UNI	219- 20
UZ7945	UNI	220-143
UZ7950	UNI	222-113
UZ7956	UNI	225- 48
UZ7960	UNI	225-147
UZ7970	UNI	228-100
UZ7975	UNI	229-142
UZ7980	UNI	230- 11
UZ7990	UNI	231-142
UZ8110	♦ UNI	233-100
UZ8111	♦ UNI	235- 64
UZ8112	♦ UNI	236- 88
UZ8113	♦ UNI	237-125
UZ8114	♦ UNI	238-114
UZ8115	♦ UNI	239-104
UZ8116	♦ UNI	240-126
UZ8117	♦ UNI	241- 61
UZ8118	♦ UNI	242- 67
UZ8119	♦ UNI	243- 2
UZ8120	♦ UNI	243-107
UZ8210	♦ UNI	233-101
UZ8211	♦ UNI	235- 65
UZ8212	♦ UNI	236- 89
UZ8213	♦ UNI	237-126
UZ8214	♦ UNI	238-115
UZ8215	♦ UNI	239-105
UZ8216	♦ UNI	240-127
UZ8217	♦ UNI	241- 62
UZ8218	♦ UNI	242- 68
UZ8219	♦ UNI	243- 3
UZ8220	♦ UNI	243-108
UZ8706	♦ UNI	178- 19
UZ8707	♦ UNI	180- 63

TYPE No.	MFRS	Pg&Line
UZ8708	♦ UNI	182-113
UZ8709	♦ UNI	186- 44
UZ8710	♦ UNI	188-127
UZ8712	♦ UNI	193- 17
UZ8713	♦ UNI	195- 54
UZ8714	♦ UNI	196- 91
UZ8715	♦ UNI	198- 23
UZ8716	♦ UNI	200- 3
UZ8718	♦ UNI	202-115
UZ8720	♦ UNI	205- 56
UZ8722	♦ UNI	207- 39
UZ8724	♦ UNI	209- 22
UZ8727	♦ UNI	211-104
UZ8730	♦ UNI	213-102
UZ8733	♦ UNI	215- 69
UZ8736	♦ UNI	216-171
UZ8740	♦ UNI	218-196
UZ8745	♦ UNI	220- 97
UZ8750	♦ UNI	222- 67
UZ8756	♦ UNI	224-117
UZ8760	♦ UNI	225-121
UZ8770	♦ UNI	228- 78
UZ8775	♦ UNI	229- 38
UZ8780	♦ UNI	229-188
UZ8790	♦ UNI	231-118
UZ8806	♦ UNI	178- 20
UZ8807	♦ UNI	180- 64
UZ8808	♦ UNI	182-114
UZ8809	♦ UNI	186- 45
UZ8810	♦ UNI	188-128
UZ8812	♦ UNI	193- 18
UZ8813	♦ UNI	195- 55
UZ8814	♦ UNI	196- 92
UZ8815	♦ UNI	198- 24
UZ8816	♦ UNI	200- 4
UZ8818	♦ UNI	202-116
UZ8820	♦ UNI	205- 57
UZ8822	♦ UNI	207- 40
UZ8824	♦ UNI	209- 23
UZ8827	♦ UNI	211-105
UZ8830	♦ UNI	213-103
UZ8833	♦ UNI	215- 70
UZ8836	♦ UNI	216-172
UZ8840	♦ UNI	218-197
UZ8845	♦ UNI	220- 98
UZ8850	♦ UNI	222- 68
UZ8856	♦ UNI	224-118
UZ8860	♦ UNI	225-122
UZ8870	♦ UNI	228- 79
UZ8875	♦ UNI	229- 39
UZ8880	♦ UNI	229-189
UZ8890	♦ UNI	231-119
V1	♦ SCO	399- 78
V7Ø,AØ,BØ	TRW	538- 17
V7%,A%,B%,C,D		538- 18
	♦ CRY KSC	220-142
	MSE ♦ MSI	222-112
V7EΔ,EAΔ,EBΔ,EC,ED		225- 47
	♦ CRY KSC	225-146
V7EØ,EAØ,EBØ	TRW	228- 99
V10Ø,AØ,BØ	TRW	229-141
V10%,A%,B%,C,D		230- 10
	♦ CRY KSC	231-141
	♦ MSI	178-139
V10#	NPC	180-182
V10EΔ,EAΔ,EBΔ,EC,ED		183- 52
	♦ CRY KSC	186-162
V10EØ,EAØ,EBØ	TRW	189- 74
V12Ø,AØ,BØ	TRW	193-166
V12%,A%,B%,C,D		195-181
	♦ CRY KSC	196-151
	♦ MSI	198-168
V12EΔ,EAΔ,EBΔ,EC,ED		200-122
	♦ CRY KSC	203- 61
V12EØ,EAØ,EBØ	TRW	205-190
V13	NPC	207-183
V15Ø,AØ,BØ	TRW	209-150
V15%,A%,B%,C,D		212- 52
	♦ CRY KSC	214- 48
	♦ MSI	216- 7
V15EΔ,EAΔ,EBΔ,EC,ED		217- 94
	♦ CRY KSC	219- 20
V15EØ,EAØ,EBØ	TRW	220-143
V20Ø,AØ,BØ	TRW	222-113
V20%,A%,B%,C,D		225- 48
	♦ CRY KSC	225-147
	♦ MSI	228-100
V20EΔ,EAΔ,EBΔ,EC,ED		229-142
	♦ CRY KSC	230- 11
V20EØ,EAØ,EBØ	TRW	231-142
V20EG	♦ CRY	233-100
V20G	♦ CRY	235- 64
V27Ø,AØ,BØ	TRW	236- 88
V27%,A%,B%,C,D		237-125
	♦ CRY KSC	238-114
	♦ MSI	239-104
V27EΔ,EAΔ,EBΔ,EC,ED		240-126
	♦ CRY KSC	241- 61
V27EØ,EAØ,EBØ	TRW	242- 67
V27EG	♦ CRY	243- 2
V27G	♦ CRY	243-107
V33Ø,AØ,BØ	TRW	233-101
V33%,A%,B%,C,D		235- 65
	♦ CRY KSC	236- 89
	♦ MSI	237-126
V33EΔ,EAΔ,EBΔ,EC,ED		238-115
	♦ CRY KSC	239-105
V33EØ,EAØ,EBØ	TRW	240-127
V33EG	♦ CRY	241- 62
V33G	♦ CRY	242- 68
V39Ø,AØ,BØ	TRW	243- 3
V39%,A%,B%,C,D		243-108
	♦ CRY KSC	178- 19
	♦ MSI	180- 63

TYPE No.	MFRS	Pg&Line
V39EΔ,EAΔ,EBΔ,EC,ED		
	♦ CRY KSC	556- 25
V39EØ,EAØ,EBØ	TRW	556- 26
V39EG	♦ CRY	556- 27
V39G	♦ CRY	556- 28
V47Ø,AØ,BØ	TRW	557- 93
V47%,A%,B%,C,D		557- 94
	♦ CRY KSC	
	♦ MSI	
V47EΔ,EAΔ,EBΔ,EC,ED		
	♦ CRY KSC	557- 95
V47EØ,EAØ,EBØ	TRW	557- 96
V47EG	♦ CRY	557- 97
V47G	♦ CRY	557- 98
V50	SCN	296-100
V56Ø,AØ,BØ	TRW	559- 46
V56%,A%,B%,C,D		559- 47
	♦ CRY KSC	
	♦ MSI	
V56EΔ,EAΔ,EBΔ,EC,ED		
	♦ CRY KSC	559- 48
V56EØ,EAØ,EBØ	TRW	559- 49
V56EG	♦ CRY	559- 50
V56G	♦ CRY	559- 51
V64	SCH	601- 65
V68Δ,AΔ,BΔ,C,D		560- 49
	♦ CRY KSC	
V68Ø,A,B	TRW	560- 50
V68EΔ,EAΔ,EBΔ,EC,ED		
	♦ CRY KSC	560- 51
V68EØ,EAØ,EBØ	TRW	560- 52
V68G	♦ CRY	560- 53
V72	SCH	601- 66
V82Δ,AΔ,BΔ,C,D		561- 48
	♦ CRY KSC	
V82Ø,A,B	TRW	561- 49
V82EΔ,EAΔ,EBΔ,EC,ED		
	♦ CRY KSC	561- 50
V82EØ,EAØ,EBØ	TRW	561- 51
V82G	♦ CRY	561- 52
V100Δ,AΔ,BΔ,C,D		562- 16
	♦ CRY KSC	
V100Ø,A,B	TRW	562- 17
V100#	SCN	304- 85
V100EΔ,EAΔ,EBΔ,EC,ED		
	♦ CRY KSC	562- 18
V100EØ,EAØ,EBØ		562- 19
	TRW	
V100G	♦ CRY	562- 20
V200	SCN	316- 10
V300	SCN	324- 95
V400	SCN	335- 15
V500	SCN	343- 36
V600	SCN	352- 12
V900Δ,AΔ,BΔ,C,D		562- 21
	♦ CRY KSC	
V900Ø,AØ,BØ	TRW	562- 22
V900EΔ,EAΔ,EBΔ,EC,ED		
	♦ CRY KSC	562- 23
V900EØ,EAØ,EBØ		562- 24
	TRW	
V907Δ,AΔ,BΔ,CΔ,DΔ		
	♦ CRY KSC	538- 21
V907Ø,AØ,BØ	TRW	538- 22
V907%,A%,B%,C%,D%		
	♦ MSI	538- 23
V907EΔ,EAΔ,EBΔ,EC,ED		
	♦ CRY KSC	538- 24
V907EØ,EAØ,EBØ		538- 25
	TRW	
V910Δ,AΔ,BΔ,CΔ,DΔ		
	♦ CRY KSC	541- 62
V910Ø,AØ,BØ	TRW	541- 63
V910%,A%,B%,C%,D%		
	♦ MSI	541- 64
V910EΔ,EAΔ,EBΔ,EC,ED		
	♦ CRY KSC	541- 65
V910EØ,EAØ,EBØ		541- 66
	TRW	
V912Δ,AΔ,BΔ,CΔ,DΔ		
	♦ CRY KSC	543- 89
V912Ø,AØ,BØ	TRW	543- 90
V912%,A%,B%,C%,D%		
	♦ MSI	543- 91
V912EΔ,EAΔ,EBΔ,EC,ED		
	♦ CRY KSC	543- 92
V912EØ,EAØ,EBØ		543- 93
	TRW	
V915Δ,AΔ,BΔ,CΔ,DΔ		
	♦ CRY KSC	546- 19
V915Ø,AØ,BØ	TRW	546- 20
V915%,A%,B%,C%,D%		
	♦ MSI	546- 21
V915EΔ,EAΔ,EBΔ,EC,ED		
	♦ CRY KSC	546- 22
V915EØ,EAØ,EBØ		546- 23
	TRW	
V920Δ,AΔ,BΔ,CΔ,DΔ		
	♦ CRY KSC	548- 76
V920Ø,AØ,BØ	TRW	548- 77
V920%,A%,B%,C%,D%		
	♦ MSI	548- 78
V920EΔ,EAΔ,EBΔ,EC,ED		
	♦ CRY KSC	548- 79
V920EØ,EAØ,EBØ		548- 80
	TRW	
V927Δ,AΔ,BΔ,CΔ,DΔ		
	♦ CRY KSC	552- 65
V927Ø,AØ,BØ	TRW	552- 66
V927%,A%,B%,C%,D%		
	♦ MSI	552- 67
V927EΔ,EAΔ,EBΔ,EC,ED		
	♦ CRY KSC	552- 68

TYPE No.	MFRS	Pg&Line
V927EØ,EAØ,EBØ		552- 69
	TRW	
V933Δ,AΔ,BΔ,CΔ,DΔ		
	♦ CRY KSC	554- 65
V933Ø,AØ,BØ	TRW	554- 66
V933%,A%,B%,C%,D%		
	♦ MSI	554- 67
V933EΔ,EAΔ,EBΔ,EC,ED		
	♦ CRY KSC	554- 68
V933EØ,EAØ,EBØ		554- 69
	TRW	
V939Δ,AΔ,BΔ,CΔ,DΔ		
	♦ CRY KSC	556- 29
V939Ø,AØ,BØ	TRW	556- 30
V939%,A%,B%,C%,D%		
	♦ MSI	556- 31
V939EΔ,EAΔ,EBΔ,EC,ED		
	♦ CRY KSC	556- 32
V939EØ,EAØ,EBØ		556- 33
	TRW	
V947Δ,AΔ,BΔ,CΔ,DΔ		
	♦ CRY KSC	557- 99
V947Ø,AØ,BØ	TRW	557-100
V947%,A%,B%,C%,D%		
	♦ MSI	557-101
V947EΔ,EAΔ,EBΔ,EC,ED		
	♦ CRY KSC	557-102
V947EØ,EAØ,EBØ		557-103
	TRW	
V956Δ,AΔ,BΔ,CΔ,DΔ		
	♦ CRY KSC	559- 52
V956Ø,AØ,BØ	TRW	559- 53
V956%,A%,B%,C%,D%		
	♦ MSI	559- 54
V956EΔ,EAΔ,EBΔ,EC,ED		
	♦ CRY KSC	559- 55
V956EØ,EAØ,EBØ		559- 56
	TRW	
V968Δ,AΔ,BΔ,CΔ,DΔ		
	♦ CRY KSC	560- 54
V968Ø,AØ,BØ	TRW	560- 55
V968EΔ,EAΔ,EBΔ,EC,ED		
	♦ CRY KSC	560- 56
V968EØ,EAØ,EBØ		560- 57
	TRW	
V982Δ,AΔ,BΔ,CΔ,DΔ		
	♦ CRY KSC	561- 53
V982Ø,AØ,BØ	TRW	560- 58
V982EΔ,EAΔ,EBΔ,EC,ED		
	♦ CRY KSC	561- 54
V982EØ,EAØ,EBØ		561- 55
	TRW	
V2051E	NECJ	439- 37
V2051H	NECJ	455- 63
V2051K	NECJ	469- 24
V2059EJ	NECJ	392- 91
V2059GZ	NECJ	395- 1
V2059N	NECJ	366- 80
V2059R	NECJ	381- 25
V2059X	NECJ	387- 70
V2059Z	NECJ	390-104
V2060EJ	NECJ	495- 13
V2060M	NECJ	479- 30
V2060P	NECJ	490- 37
V2060X	NECJ	494- 25
VA10	♦ VARO	369- 28
VA10X	♦ VARO	288- 31
VA15	♦ VARO	383-105
VA15X	♦ VARO	288- 93
VA20	♦ VARO	389- 39
VA20X	♦ VARO	289- 7
VA25	♦ VARO	392- 18
VA25X	♦ VARO	289- 18
VA30	♦ VARO	393- 71
VA30X	♦ VARO	289- 40
VA35	♦ VARO	395- 51
VA107	♦ CRY	535-102
	KSC	
VA112	♦ CRY	541- 67
	KSC	
VA113	♦ CRY	550- 75
	KSC	
VA114	♦ CRY	557-104
	KSC	
VA115	♦ CRY	541- 68
	KSC	
VA116	♦ CRY	550- 76
	KSC	
VA117	♦ CRY	557-105
	KSC	
VA122	♦ CRY	557-106
	KSC	
VA123	♦ CRY	546- 24
	KSC	
VA124	♦ CRY	546- 25
	KSC	
VA125	♦ CRY	546- 26
	KSC	
VA126	♦ CRY	546- 27
	KSC	
VA127	♦ CRY	554- 70
	KSC	
VA128	♦ CRY	554- 71
	KSC	
VA129	♦ CRY	554- 72
	KSC	
VA130	♦ CRY	554- 73
	KSC	
VA132	♦ CRY	541- 69
	KSC	
VA133	♦ CRY	550- 77
	KSC	
VA134	♦ CRY	557-107
	KSC	

Δ-Registered with JEDEC by this manufacturer

♦-Copy of mfr's data sheet may be ordered from D.A.T.A.

1. TYPE No. CROSS INDEX

IN TYPE NUMBER SEQUENCE

TYPE No	MFRS	Pg&Line
VA135	♦CRY	541- 70
	KSC	
VA136	♦CRY	550- 78
	KSC	
VA137	♦CRY	557-108
	KSC	
VA138	♦CRY	535-103
	KSC	
VA139	♦CRY	535-104
	KSC	
VA140	♦CRY	535-105
	KSC	
VA141	♦CRY	535-106
	KSC	
VA150	♦CRY	535-107
	KSC	
VA151	♦CRY	541- 71
	KSC	
VA152	♦CRY	546- 28
	KSC	
VA153	♦CRY	550- 79
	KSC	
VA154	♦CRY	554- 74
	KSC	
VA155	♦CRY	558- 1
	KSC	
VA156	♦CRY	535-108
	KSC	
VA157	♦CRY	541- 72
	KSC	
VA158	♦CRY	546- 29
	KSC	
VA159	♦CRY	550- 80
	KSC	
VA160	♦CRY	554- 75
	KSC	
VA161	♦CRY	558- 2
	KSC	
VA162	♦CRY	535-109
	KSC	
VA163	♦CRY	541- 73
	KSC	
VA165	♦CRY	546- 30
	KSC	
VA166	♦CRY	550- 81
	KSC	
VA167	♦CRY	554- 76
VA168	♦CRY	560- 59
	KSC	
VA169	♦CRY	560- 60
	KSC	
VA170	♦CRY	560- 61
	KSC	
VA171	♦CRY	560- 62
	KSC	
VA172	♦CRY	560- 63
	KSC	
VA173	♦CRY	560- 64
	KSC	
VA200	♦CRY	560- 65
	KSC	
VA201	♦CRY	560- 66
	KSC	
VA202	♦CRY	558- 3
	KSC	
VA203	♦CRY	558- 4
	KSC	
VA204	♦CRY	554- 77
	KSC	
VA205	♦CRY	554- 78
	KSC	
VA206	♦CRY	550- 82
	KSC	
VA207	♦CRY	550- 83
	KSC	
VA208	♦CRY	546- 31
	KSC	
VA209	♦CRY	546- 32
	KSC	
VA210	♦CRY	541- 74
	KSC	
VA211	♦CRY	541- 75
	KSC	
VA212	♦CRY	535-110
	KSC	
VA213	♦CRY	536- 1
	KSC	
VA300	♦CRY	560- 67
	KSC	
VA301	♦CRY	560- 68
	KSC	
VA302	♦CRY	558- 5
	KSC	
VA303	♦CRY	558- 6
	KSC	
VA304	♦CRY	554- 79
	KSC	
VA305	♦CRY	554- 80
	KSC	
VA306	♦CRY	550- 84
	KSC	
VA307	♦CRY	550- 85
	KSC	
VA308	♦CRY	546- 33
	KSC	
VA309	♦CRY	546- 34
	KSC	
VA310	♦CRY	541- 76
	KSC	
VA311	♦CRY	541- 77
	KSC	
VA312	♦CRY	536- 2
	KSC	

TYPE No.	MFRS	Pg&Line
VA313	♦CRY	536- 3
	KSC	
VA521	♦CRY	563- 2
VA522	♦CRY	563- 3
VA523	♦CRY	563- 4
VA524	♦CRY	563- 5
VA621	♦CRY	563- 45
VA622	♦CRY	563- 46
VA623	♦CRY	563- 47
VA624	♦CRY	563- 48
VA723	♦CRY	563- 54
VA724	♦CRY	563- 55
VA823	♦CRY	563- 64
VA824	♦CRY	563- 65
VA5139	♦CRY	537- 25
VA5139A	♦CRY	537- 26
VA5140	♦CRY	541- 78
VA5140A	♦CRY	541- 79
VA5141	♦CRY	543- 94
VA5141A	♦CRY	543- 95
VA5142	♦CRY	546- 35
VA5142A	♦CRY	546- 36
VA5143	♦CRY	548- 15
VA5143A	♦CRY	548- 16
VAB800N26,N27,N28		
	♦VARM	551-109
VAB801N26,N27,N28		
	♦VARM	539- 73
VAB802N26,N27,N28		
	♦VARM	534- 26
VAB803N20,N26,N28		
	♦VARM	532- 86
VAB804N20,N26,N28		
	♦VARM	531- 18
VAB805N20	♦VARM	519- 40
VAB806N20	♦VARM	523- 61
VAB807N10,N20		520- 7
	♦VARM	
VAB810AN25,26	VARM	551- 57
VAB810AN27,28	VARM	551- 58
VAB810N26,N27,N28		
	♦VARM	551-110
VAB811AN25,26,28		539- 74
	♦VARM	
VAB811N26,N27,N28		
	♦VARM	539- 75
VAB812AN25,26,28		534- 27
	♦VARM	
VAB812N26,N27,N28		
	♦VARM	534- 28
VAB813AN20,AN25		532- 87
	♦VARM	
VAB813AN20,25	VARM	532- 88
VAB813AN26,AN28		532- 89
	♦VARM	
VAB813AN26,28	VARM	532- 90
VAB814AN20,AN26		531- 19
	VARM	
VAB814N20,N26,N28		
	♦VARM	531- 20
VAB820N26,N27,N28		
	♦VARM	547- 24
VAB824AN20	♦VARM	528- 98
VAB825N20	♦VARM	528- 99
VAB825N26	♦VARM	528-100
VAO11AN19	VARM	601- 67
VAO11AN20	VARM	601- 68
VAO11BN19	VARM	601- 69
VAO11BN20	VARM	601- 70
VAO12CN19	VARM	601- 71
VAO12CN20	VARM	601- 72
VAO12DN19	VARM	601- 73
VAO12DN20	VARM	601- 74
VAO12EN19	VARM	601- 75
VAO12EN20	VARM	601- 76
VAO13F1N19	VARM	601- 77
VAO13F2N19	VARM	601- 78
VAO13G1N19	VARM	601- 79
VAO13G2N19	VARM	601- 80
VAO13H1N19	VARM	601- 81
VAO13H2N19	VARM	601- 82
VAO14J1N19	VARM	601- 83
VAO14J2N19	VARM	601- 84
VAO14K1N19	VARM	601- 85
VAO14K2N19	VARM	601- 86
VAO21AN19	♦VARM	596- 23
VAO21AN21	♦VARM	596- 24
VAO21BN19	♦VARM	596- 25
VAO21BN21	♦VARM	596- 26
VAO22CN19	♦VARM	596- 27
VAO22CN21	♦VARM	596- 28
VAO22DN19	♦VARM	596- 29
VAO22DN21	♦VARM	596- 30
VAO22EN19	♦VARM	596- 31
VAO22EN21	♦VARM	596- 32
VAO23F1N19	♦VARM	596- 33
VAO23F1N21	♦VARM	596- 34
VAO23F2N19	♦VARM	596- 35
VAO23F2N21	♦VARM	596- 36
VAO23G1N19	♦VARM	596- 37
VAO23G1N21	♦VARM	596- 38
VAO23G2N19	♦VARM	596- 39
VAO23G2N21	♦VARM	596- 40
VAO23H1N19	♦VARM	596- 41
VAO23H1N21	♦VARM	596- 42
VAO23H2N19	♦VARM	596- 43
VAO23H2N21	♦VARM	596- 44
VAO31AN19	♦VARM	596- 45
VAO31AN20	♦VARM	596- 46
VAO31AN21	♦VARM	596- 47
VAO31AN22	♦VARM	596- 48
VAO31BN19	♦VARM	596- 49
VAO31BN20	♦VARM	596- 50
VAO31BN21	♦VARM	596- 51

TYPE No.	MFRS	Pg&Line
VAO31BN22	♦VARM	596- 52
VAO32CN19	♦VARM	596- 53
VAO32CN20	♦VARM	596- 54
VAO32CN21	♦VARM	596- 55
VAO32CN22	♦VARM	596- 56
VAO32DN19	♦VARM	596- 57
VAO32DN20	♦VARM	596- 58
VAO32DN21	♦VARM	596- 59
VAO32DN22	♦VARM	596- 60
VAO32EN19	♦VARM	596- 61
VAO32EN20	♦VARM	596- 62
VAO32EN21	♦VARM	596- 63
VAO32EN22	♦VARM	596- 64
VAO33FN19	♦VARM	596- 65
VAO33FN21	♦VARM	596- 66
VAO33GN19	♦VARM	596- 67
VAO33GN21	♦VARM	596- 68
VAO33HN19	♦VARM	596- 69
VAO33HN21	♦VARM	596- 70
VAO34JN19	♦VARM	596- 71
VAO34KN19	♦VARM	596- 72
VAP81AN10	VARM	519- 72
VAP81AN19	VARM	519- 73
VAP81AN20	VARM	519- 74
VAP81BN10	VARM	519- 75
VAP81BN19	VARM	519- 76
VAP81BN20	VARM	519- 77
VAP81CN10	VARM	519- 78
VAP81CN19	VARM	519- 79
VAP81CN20	VARM	519- 80
VAP81DN10	VARM	519- 81
VAP81DN19	VARM	519- 82
VAP81DN20	VARM	519- 83
VAP81EN10	VARM	519- 84
VAP81EN19	VARM	519- 85
VAP81EN20	VARM	519- 86
VAP81FN10	VARM	519- 87
VAP81FN19	VARM	519- 88
VAP81FN20	VARM	519- 89
VAP81GN10	VARM	519- 90
VAP81GN19	VARM	519- 91
VAP81GN20	VARM	519- 92
VAP81HN10	VARM	519- 93
VAP81HN19	VARM	519- 94
VAP81HN20	VARM	519- 95
VAP81IN10	VARM	519- 96
VAP81IN19	VARM	519- 97
VAP81IN20	VARM	519- 98
VAP82AN10	VARM	521- 57
VAP82AN19	VARM	521- 58
VAP82AN20	VARM	521- 59
VAP82BN10	VARM	521- 60
VAP82BN19	VARM	521- 61
VAP82BN20	VARM	521- 62
VAP82CN10	VARM	521- 63
VAP82CN19	VARM	521- 64
VAP82CN20	VARM	521- 65
VAP82DN10	VARM	521- 66
VAP82DN19	VARM	521- 67
VAP82DN20	VARM	521- 68
VAP82EN10	VARM	521- 69
VAP82EN19	VARM	521- 70
VAP82EN20	VARM	521- 71
VAP83AN10	VARM	523- 62
VAP83AN19	VARM	523- 63
VAP83AN20	VARM	523- 64
VAP83BN10	VARM	523- 65
VAP83BN19	VARM	523- 66
VAP83BN20	VARM	523- 67
VAP83CN10	VARM	523- 68
VAP83CN19	VARM	523- 69
VAP83CN20	VARM	523- 70
VAP101N10	VARM	523- 45
VAP101N19	VARM	523- 46
VAP101N20	VARM	523- 47
VAP102N10	VARM	523- 48
VAP102N19	VARM	523- 49
VAP102N20	VARM	523- 50
VAP103N10	VARM	523- 51
VAP103N19	VARM	523- 52
VAP103N20	VARM	523- 53
VAP104N10	VARM	523- 54
VAP104N19	VARM	523- 55
VAP104N20	VARM	523- 56
VAS11N10,N16,N18,N20		
	VARM	519- 16
VAS12N10,N16,N18,N20		
	VARM	519- 17
VAS21N10,N16,N18,N20		
	VARM	519- 18
VAS22N10,N16,N18,N20		
	VARM	519- 19
VAS31N10,N16,N18,N20		
	VARM	519- 20
VAS32N10,N16,N18,N20		
	VARM	519- 21
VAS41N10,N16,N18,N20		
	VARM	519- 22
VAS42N10,N16,N18,N20		
	VARM	519- 23
VAS43N10,N16,N18,N20		
	VARM	519- 24
VAS52N10,N16,N18,N20		
	VARM	519- 25
VAS53N10,N16,N18,N20		
	VARM	519- 26
VAS63N10,N16,N18,N20		
	VARM	519- 27
VAT11N16,N18,N20		535- 86
	♦VARM	
VAT12N16,N18,N20		539- 92
	♦VARM	
VAT13N16,N18,N20		544- 33
	♦VARM	

TYPE No.	MFRS	Pg&Line
VAT14N16,N18,N20		547- 67
	♦VARM	
VAT15N16,N18,N20		549- 24
	♦VARM	
VAT16N16,N18,N20		551- 69
	♦VARM	
VAT17N16,N18,N20		553- 14
	♦VARM	
VAT18N16,N18,N20		555- 66
	♦VARM	
VAT19N16,N18,N20		556- 62
	♦VARM	
VAT51N16,N18,N20		535- 87
	♦VARM	
VAT52N16,N18,N20		539- 93
	♦VARM	
VAT53N16,N18,N20		544- 34
	♦VARM	
VAT54N16,N18,N20		547- 68
	♦VARM	
VAT55N16,N18,N20		549- 25
	♦VARM	
VAT56N16,N18,N20		551- 70
	♦VARM	
VAT57N16,N18,N20		553- 15
	♦VARM	
VAT58N16,N18,N20		555- 67
	♦VARM	
VAT59N16,N18,N20		556- 63
	♦VARM	
VAT61N16	♦VARM	531- 94
VAT61N18	♦VARM	531- 95
VAT61N20	♦VARM	531- 96
VAT62N16	♦VARM	533- 25
VAT62N18	♦VARM	533- 26
VAT62N20	♦VARM	533- 27
VAT63N16	♦VARM	533-105
VAT63N18	♦VARM	533-106
VAT63N20	♦VARM	533-107
VAT71N16,N18,N20		535- 88
	♦VARM	
VAT72N16,N18,N20		539- 94
	♦VARM	
VAT73N16,N18,N20		544- 35
	♦VARM	
VAT74N16,N18,N20		547- 69
	♦VARM	
VAT75N16,N18,N20		549- 26
	♦VARM	
VAT76N16,N18,N20		551- 71
	♦VARM	
VAT77N16,N18,N20		553- 16
	♦VARM	
VAT78N16,N18,N20		555- 68
	♦VARM	
VAT79N16,N18,N20		556- 64
	♦VARM	
VAT91N16	♦VARM	531- 97
VAT91N18	♦VARM	531- 98
VAT91N20	♦VARM	531- 99
VAT92N16	♦VARM	533- 22
VAT92N18	♦VARM	533- 23
VAT92N20	♦VARM	533- 24
VAT93N16	♦VARM	533-100
VAT93N18	♦VARM	533-101
VAT93N20	♦VARM	533-102
VB10	♦VARO	369- 40
VB10X	♦VARO	288- 32
VB11	MITJ	582- 70
VB14	MITJ	582- 71
VB15	♦VARO	384- 9
VB15X	♦VARO	288- 94
VB20	♦VARO	389- 57
VB20X	♦VARO	289- 8
VB25	♦VARO	392- 24
VB25X	♦VARO	289- 19
VB30	♦VARO	393- 87
VB30X	♦VARO	289- 41
VB40	♦VARO	396- 70
VB40X	♦VARO	289- 62
VB50	♦VARO	399- 24
VB50△	♦SCN	294-107
VB50X	♦VARO	289- 90
VB60	♦VARO	400- 92
VB100	♦SCN	302- 9
VB200	♦SCN	313- 11
VB300	♦SCN	322- 72
VB400	♦SCN	331-108
VB500	♦SCN	341- 41
VB600	♦SCN	349- 21
VB700	♦SCN	356- 19
VB800	♦SCN	361- 93
VB1000	♦SCN	372- 9
VB1200	♦SCN	378- 83
VC7,A,B	♦EAS	538- 26
VC10,A,B	♦EAS	541- 80
VC12,A,B	♦EAS	543- 96
VC15,A,B	EAS	546- 37
VC20△,A,B	♦EAS	548- 81
VC20☑	♦VARO	390- 43
VC20X	♦VARO	289- 9
VC27,A,B	♦EAS	552- 70
VC30	♦VARO	394- 75
VC30X	♦VARO	289- 42
VC33,A,B	♦EAS	554- 81
VC39,A,B	♦EAS	556- 34
VC40	♦VARO	397- 54
VC40X	♦VARO	289- 63
VC47,A,B	♦EAS	558- 7
VC50	♦VARO	400- 6
VC50X	♦VARO	289- 91
VC56,A,B	♦EAS	559- 57
VC60	♦VARO	401- 62
VC60X	♦VARO	290- 10

TYPE No.	MFRS	Pg&Line
VC68,A,B	♦EAS	560- 69
VC70	♦VARO	402- 66
VC70X	♦VARO	290- 30
VC80	♦VARO	404- 7
VC80X	♦VARO	290- 60
VC82,A,B	♦EAS	561- 56
VC99,A,B	♦EAS	562- 25
VC112,A,B	♦EAS	562- 64
VC115,A,B	♦EAS	562- 72
VC118,A,B	♦EAS	562- 90
VC122,A,B	♦EAS	562- 97
VC127,A,B	♦EAS	563- 9
VC133,A,B	♦EAS	563- 16
VC207,A,B	♦EAS	538- 27
VC210,A,B	♦EAS	541- 81
VC212,A,B	♦EAS	543- 97
VC215,A,B	♦EAS	546- 38
VC220,A,B	♦EAS	548- 82
VC227,A,B	♦EAS	552- 71
VC233,A,B	♦EAS	554- 82
VC239,A,B	♦EAS	556- 35
VC247,A,B	♦EAS	558- 8
VC256,A,B	♦EAS	559- 58
VC268,A,B	♦EAS	560- 70
VC282,A,B	♦EAS	561- 57
VC299,A,B	♦EAS	562- 26
VC306,A,B	♦EAS	538- 28
	KSC	
VC307,A,B	♦EAS	538- 29
	KSC	
VC309,A,B	♦EAS	541- 82
	KSC	
VC310,A,B	♦EAS	541- 83
	KSC	
VC314,A,B	♦EAS	546- 39
	KSC	
VC315,A,B	♦EAS	546- 40
	KSC	
VC321,A,B	♦EAS	550- 86
	KSC	
VC322,A,B	♦EAS	550- 87
	KSC	
VC332,A,B	♦EAS	554- 83
	KSC	
VC333,A,B	♦EAS	554- 84
	KSC	
VC346,A,B	♦EAS	558- 9
	KSC	
VC347,A,B	♦EAS	558- 10
	KSC	
VC367,A,B	♦EAS	560- 71
	KSC	
VC399,A,B	♦EAS	562- 27
	KSC	
VC406,A,B	♦EAS	538- 30
	KSC	
VC407,A,B	♦EAS	538- 31
	KSC	
VC408,A,B	♦EAS	538- 32
	KSC	
VC409,A,B	♦EAS	541- 84
	KSC	
VC410,A,B	♦EAS	541- 85
	KSC	
VC411,A,B	♦EAS	541- 86
	KSC	
VC414,A,B	♦EAS	546- 41
	KSC	
VC415,A,B	♦EAS	546- 42
	KSC	
VC416,A,B	♦EAS	546- 43
	KSC	
VC421,A,B	♦EAS	550- 88
	KSC	
VC422,A,B	♦EAS	550- 89
	KSC	
VC423,A,B	♦EAS	550- 90
	KSC	
VC432,A,B	♦EAS	554- 85
	KSC	
VC433,A,B	♦EAS	554- 86
	KSC	
VC434,A,B	♦EAS	554- 87
	KSC	
VC446,A,B	♦EAS	558- 11
	KSC	
VC447,A,B	♦EAS	558- 12
	KSC	
VC448,A,B	♦EAS	558- 13
	KSC	
VC467,A,B	♦EAS	560- 72
	KSC	
VC533,B,C,D	♦EAS	563- 17
VC539,B,C,D	♦EAS	563- 26
VC547,B,C,D	♦EAS	563- 28
VC556,B,C,D	♦EAS	563- 43
VC568,B,C,D	♦EAS	563- 49
VC582,B,C,D	♦EAS	563- 52
VC599,B,C,D	♦EAS	563- 56
VC605,A,B	♦EAS	534- 85
	KSC	
VC606,A,B	♦EAS	534- 86
	KSC	
VC607,A,B	♦EAS	538- 33
	KSC	
VC608,A,B	♦EAS	538- 34
	KSC	
VC610,A,B	♦EAS	541- 87
	KSC	
VC611,A,B	♦EAS	541- 88
	KSC	
VC612,A,B	♦EAS	543- 98
	KSC	

△-Registered with JEDEC by this manufacturer

♦-Copy of mfr's data sheet may be ordered from D.A.T.A.

1. TYPE No. CROSS INDEX

IN TYPE NUMBER SEQUENCE

TYPE No.	MFRS	Pg&Line
VC613,A,B	♦EAS	543- 99
	KSC	
VC615,A,B	♦EAS	546- 44
	KSC	
VC616,A,B	♦EAS	546- 45
VC618,A,B	♦EAS	548- 17
	KSC	
VC619,A,B	♦EAS	548- 18
	KSC	
VC622,A,B	♦EAS	550- 91
	KSC	
VC623,A,B	♦EAS	550- 92
	KSC	
VC627,A,B	♦EAS	552- 72
	KSC	
VC628,A,B	♦EAS	552- 73
	KSC	
VC633,A,B	♦EAS	554- 88
VC634,A,B	♦EAS	554- 89
	KSC	
VC639,A,B	♦EAS	556- 36
	KSC	
VC641,A,B	♦EAS	556- 37
	KSC	
VC647,A,B	♦EAS	558- 14
	KSC	
VC648,A,B	♦EAS	558- 15
	KSC	
VC821,A,B	♦EAS	538- 35
VC822,A,B	♦EAS	541- 89
VC823,A,B	♦EAS	543-100
VC824,A,B	♦EAS	546- 46
VC825,A,B	♦EAS	548- 83
VC826,A,B	♦EAS	552- 74
VC827,A,B	♦EAS	554- 90
VC828,A,B	♦EAS	556- 38
VC829,A,B	♦EAS	558- 16
VC831,A,B	♦EAS	559- 59
VC832,A,B	♦EAS	560- 73
VC833,A,B	♦EAS	561- 58
VC834,A,B	♦EAS	562- 28
VC841,A,B	♦EAS	538- 36
VC842,A,B	♦EAS	541- 90
VC843,A,B	♦EAS	543-101
VC844,A,B	♦EAS	546- 47
VC845,A,B	♦EAS	548- 84
VC846,A,B	♦EAS	552- 75
VC847,A,B	♦EAS	554- 91
VC848,A,B	♦EAS	556- 39
VC849,A,B	♦EAS	558- 17
VC851,A,B	♦EAS	559- 60
VC852,A,B	♦EAS	560- 74
VC853,A,B	♦EAS	561- 59
VC854,A,B	♦EAS	562- 29
VE18	♦VARO	300- 94
VE18X	♦VARO	300- 91
VE27	♦VARO	311- 80
VE28	♦VARO	311- 81
VE28X	♦VARO	311- 75
VE47	♦VARO	330- 62
VE48	♦VARO	330- 63
VE48X	♦VARO	330- 56
VE67	♦VARO	347- 90
VE68	♦VARO	347- 91
VF5-5	SCN	398- 94
	♦VARO	
VF5-5X	SCN	289- 92
	♦VARO	
VF5-7	SCN	402- 1
	♦VARO	
VF5-7X	SCN	290- 31
	♦VARO	
VF5-10	SCN	405- 28
	♦VARO	
VF5-10X	SCN	290- 92
	♦VARO	
VF5-12	SCN	406- 94
	♦VARO	
VF5-12X	SCN	290-110
	♦VARO	
VF5-15	SCN	408- 5
	♦VARO	
VF5-15X	SCN	291- 19
	♦VARO	
VF5-20	SCN	409- 91
	♦VARO	
VF5-20X	SCN	291- 47
	♦VARO	
VF5-25	SCN	411- 2
	♦VARO	
VF5-25X	SCN	291- 59
	♦VARO	
VF5-30	SCN	412- 2
	♦VARO	
VF5-30X	SCN	291- 72
	♦VARO	
VF5-40	SCN	412- 69
	♦VARO	
VF5-40X	SCN	291- 87
	♦VARO	
VF10-5	SCN	398-100
	♦VARO	
VF10-5X	SCN	289- 93
	♦VARO	
VF10-7	SCN	402- 5
	♦VARO	
VF10-7X	SCN	290- 32
	♦VARO	
VF10-10	SCN	405- 33
	♦VARO	
VF10-10X	SCN	290- 93
	♦VARO	
VF10-12	SCN	406- 97
	♦VARO	

TYPE No.	MFRS	Pg&Line
VF10-12X	SCN	291- 1
	♦VARO	
VF10-15	SCN	408- 11
	♦VARO	
VF10-15X	SCN	291- 20
	♦VARO	
VF10-20	SCN	409- 96
	♦VARO	
VF10-20X	SCN	291- 48
	♦VARO	
VF10-25	SCN	411- 6
	♦VARO	
VF10-25X	SCN	291- 60
	♦VARO	
VF10-30	SCN	412- 7
	♦VARO	
VF10-30X	SCN	291- 73
	♦VARO	
VF10-40	SCN	412- 73
	♦VARO	
VF10-40X	SCN	291- 88
	♦VARO	
VF25-5	SCN	399- 5
	♦VARO	
VF25-5X	SCN	289- 94
	♦VARO	
VF25-7	SCN	402- 15
	♦VARO	
VF25-7X	SCN	290- 33
	♦VARO	
VF25-10	SCN	405- 48
	♦VARO	
VF25-10X	SCN	290- 94
	♦VARO	
VF25-12	SCN	407- 3
	♦VARO	
VF25-12X	SCN	291- 2
	♦VARO	
VF25-15	SCN	408- 21
	♦VARO	
VF25-15X	SCN	291- 21
	♦VARO	
VF25-20	SCN	409-106
	♦VARO	
VF25-20X	SCN	291- 49
	♦VARO	
VF25-25	SCN	411- 13
	♦VARO	
VF25-25X	SCN	291- 61
	♦VARO	
VF25-30	SCN	412- 15
	♦VARO	
VF25-30X	SCN	291- 74
	♦VARO	
VF25-40	SCN	412- 79
	♦VARO	
VF25-40X	SCN	291- 89
	♦VARO	
VG5	♦VARO	398-103
VG5X	♦VARO	289- 95
VG7	♦VARO	402- 7
VG7X	♦VARO	290- 34
VG10	♦VARO	405- 24
VG10X	♦VARO	290- 95
VG12	♦VARO	406- 98
VG12X	♦VARO	291- 3
VG15	♦VARO	408- 12
VG15X	♦VARO	291- 22
VG20	♦VARO	409- 97
VG20X	♦VARO	291- 50
VG107,A,B,C,D		537- 27
	♦CRY	
VG110,A,B,C,D		541- 91
	♦CRY	
VG115,A,B,C,D		546- 48
	♦CRY	
VG122,A,B,C,D		550- 93
	♦CRY	
VG133,A,B,C,D		554- 92
	♦CRY	
VG139,A,B,C,D		556- 40
	♦CRY	
VG147,A,B,C,D		558- 18
	♦CRY	
VG207,A,B,C,D		537- 28
	♦CRY	
VG210,A,B,C,D		541- 92
	♦CRY	
VG215,A,B,C,D		546- 49
	♦CRY	
VG222,A,B,C,D		550- 94
	♦CRY	
VG233,A,B,C,D		554- 93
	♦CRY	
VG239,A,B,C,D		556- 41
	♦CRY	
VG247,A,B,C,D		558- 19
	♦CRY	
VG307,A,B,C,D		537- 29
	♦CRY	
VG310,A,B,C,D		541- 93
	♦CRY	
VG315,A,B,C,D		546- 50
	♦CRY	
VG322,A,B,C,D		550- 95
	♦CRY	
VG333,A,B,C,D		554- 94
	♦CRY	
VG339,A,B,C,D		556- 42
	♦CRY	
VG347,A,B,C,D		558- 20
	♦CRY	
VH3,A,B	SOD	532- 17
VH3E	SOD	532- 18

TYPE No.	MFRS	Pg&Line
VH5,A,B	SOD	534- 87
VH5E	SOD	534- 88
VH7	SOD	538- 37
VH7E	SOD	538- 38
VH10	SOD	541- 94
VH10E	SOD	541- 95
VH12	SOD	543-102
VH12E	SOD	543-103
VH15	SOD	546- 51
VH15E	SOD	546- 52
VH20	SOD	548- 85
VH20E	SOD	548- 86
VH27	SOD	552- 76
VH27E	SOD	552- 77
VH33	SOD	554- 95
VH33E	SOD	554- 96
VH39	SOD	556- 43
VH39E	SOD	556- 44
VH47	SOD	558- 21
VH47E	SOD	558- 22
VH56	SOD	559- 61
VH56E	SOD	559- 62
VH68	SOD	560- 75
VH82	SOD	561- 60
VH100	SOD	562- 30
VH107	SOD	536- 4
VH112	SOD	541- 96
VH113	SOD	550- 96
VH114	SOD	558- 23
VH115	SOD	541- 97
VH116	SOD	550- 97
VH117	SOD	558- 24
VH122	SOD	558- 25
VH123	SOD	546- 53
VH124	SOD	546- 54
VH125	SOD	546- 55
VH126	SOD	546- 56
VH127	SOD	554- 97
VH128	SOD	554- 98
VH129	SOD	554- 99
VH130	SOD	554-100
VH132	SOD	541- 98
VH133	SOD	550- 98
VH134	SOD	558- 26
VH135	SOD	541- 99
VH136	SOD	550- 99
VH137	SOD	558- 27
VH138	SOD	536- 5
VH139	SOD	536- 6
VH140	SOD	536- 7
VH141	SOD	536- 8
VH148	♦VARO	303- 70
VH160	SOD	536- 9
VH161	SOD	541-100
VH162	SOD	546- 57
VH163	SOD	550-100
VH164	SOD	554-101
VH165	SOD	559- 91
VH166	SOD	559- 92
VH167	SOD	536- 10
VH168	SOD	541-101
VH169	SOD	546- 58
VH170	SOD	550-101
VH171	SOD	554-102
VH172	SOD	558- 28
VH173	SOD	559- 93
VH174	SOD	559- 94
VH175	SOD	536- 11
VH176	SOD	541-102
VH177	SOD	546- 59
VH178	SOD	550-102
VH179	SOD	554-103
VH180	SOD	558- 29
VH181	SOD	559- 95
VH182	SOD	559- 96
VH183	SOD	536- 12
VH184	SOD	541-103
VH185	SOD	546- 60
VH186	SOD	550-103
VH187	SOD	554-104
VH188	SOD	558- 30
VH189	SOD	559- 97
VH190	SOD	559- 98
VH191	SOD	536- 13
VH200	SOD	536- 14
VH201	SOD	536- 15
VH202	SOD	541-104
VH203	SOD	541-105
VH204	SOD	546- 61
VH205	SOD	546- 62
VH206	SOD	550-104
VH207	SOD	550-105
VH208	SOD	554-105
VH209	SOD	554-106
VH210	SOD	558- 31
VH211	SOD	558- 32
VH212	SOD	559- 99
VH213	SOD	559-100
VH225	SOD	536- 16
VH226	SOD	541-106
VH227	SOD	546- 63
VH228	SOD	550-106
VH229	SOD	554-107
VH230	SOD	558- 33
VH231	SOD	559-101
VH247	♦VARO	314- 88
VH248	♦VARO	314- 89
VH300	SOD	562- 31
VH301	SOD	562- 32
VH302	SOD	562- 73
VH303	SOD	562- 74
VH304	SOD	562-102
VH305	SOD	562-103
VH306	SOD	563- 21

TYPE No.	MFRS	Pg&Line
VH307	SOD	563- 22
VH308	SOD	563- 30
VH309	SOD	563- 31
VH310,A,B,C,D	SOD	563- 57
VH311,A,B,C,D	SOD	563- 58
VH447	♦VARO	333- 81
VH448	♦VARO	333- 82
VH647	♦VARO	350- 95
VH648	♦VARO	350- 96
VH900	SOD	562- 33
VH907	SOD	538- 39
VH907E	SOD	538- 40
VH910	SOD	541-107
VH910E	SOD	541-108
VH912	SOD	543-104
VH912E	SOD	543-105
VH915	SOD	546- 64
VH915E	SOD	546- 65
VH920	SOD	548- 87
VH920E	SOD	548- 88
VH927	SOD	552- 78
VH927E	SOD	552- 79
VH933	SOD	554-108
VH933E	SOD	555- 1
VH939	SOD	556- 45
VH939E	SOD	556- 46
VH947	SOD	558- 34
VH947E	SOD	558- 35
VH956	SOD	559- 63
VH956E	SOD	559- 64
VH968	SOD	560- 76
VH982	SOD	561- 61
VH7060	SOD	559- 65
VH7082	SOD	548- 89
VH7083	SOD	552- 80
VH7084	SOD	555- 2
VH7085	SOD	556- 47
VH7086	SOD	558- 36
VH7087	SOD	559- 66
VH7088	SOD	560- 77
VH7089	SOD	561- 62
VH7090	SOD	562- 34
VH7095	SOD	552- 81
VH7096	SOD	555- 3
VH7097	SOD	556- 48
VH7098	SOD	558- 37
VH7127	SOD	548- 90
VM200,A,B,C,D		537- 30
	♦CRY	
VM201,A,B,C,D		537- 31
	♦CRY	
VM202,A,B,C,D		537- 32
	♦CRY	
VM203,A,B,C,D		537- 33
	♦CRY	
VM204,A,B,C,D		537- 34
	♦CRY	
VM205,A,B,C,D		537- 35
	♦CRY	
VM206,A,B,C,D		537- 36
	♦CRY	
VM207,A,B,C,D		537- 37
	♦CRY	
VM208,A,B,C,D		537- 38
	♦CRY	
VM209,A,B,C,D		537- 39
	♦CRY	
VM210,A,B,C,D		537- 40
	♦CRY	
VM211,A,B,C,D		537- 41
	♦CRY	
VM212,A,B,C,D		537- 42
	♦CRY	
VM213,A,B,C,D		537- 43
	♦CRY	
VM214,A,B,C,D		537- 44
	♦CRY	
VM215,A,B,C,D		537- 45
	♦CRY	
VM216,A,B,C,D		537- 46
	♦CRY	
VM217,A,B,C,D		537- 47
	♦CRY	
VM218,A,B,C,D		537- 48
	♦CRY	
VM219,A,B,C,D		537- 49
	♦CRY	
VM220,A,B,C,D		537- 50
	♦CRY	
VM221,A,B,C,D		537- 51
	♦CRY	
VM222,A,B,C,D		537- 52
	♦CRY	
VM223,A,B,C,D		537- 53
	♦CRY	
VM224,A,B,C,D		537- 54
	♦CRY	
VM225,A,B,C,D		537- 55
	♦CRY	
VM226,A,B,C,D		537- 56
	♦CRY	
VM227,A,B,C,D		537- 57
	♦CRY	
VM228,A,B,C,D		537- 58
	♦CRY	
VM229,A,B,C,D		537- 59
	♦CRY	
VM230,A,B,C,D		537- 60
	♦CRY	
VM231,A,B,C,D		537- 61
	♦CRY	
VM232,A,B,C,D		537- 62
	♦CRY	

TYPE No.	MFRS	Pg&Line
VM233,A,B,C,D		537- 63
	♦CRY	
VM234,A,B,C,D		537- 64
	♦CRY	
VM235,A,B,C,D		537- 65
	♦CRY	
VM300,A,B,C,D		542- 1
	♦CRY	
VM301,A,B,C,D		542- 2
	♦CRY	
VM302,A,B,C,D		542- 3
	♦CRY	
VM303,A,B,C,D		542- 4
	♦CRY	
VM304,A,B,C,D		542- 5
	♦CRY	
VM305,A,B,C,D		542- 6
	♦CRY	
VM306,A,B,C,D		542- 7
	♦CRY	
VM307,A,B,C,D		542- 8
	♦CRY	
VM308,A,B,C,D		542- 9
	♦CRY	
VM309,A,B,C,D		542- 10
	♦CRY	
VM310,A,B,C,D		542- 11
	♦CRY	
VM311,A,B,C,D		542- 12
	♦CRY	
VM312,A,B,C,D		542- 13
	♦CRY	
VM313,A,B,C,D		542- 14
	♦CRY	
VM314,A,B,C,D		542- 15
	♦CRY	
VM315,A,B,C,D		542- 16
	♦CRY	
VM316,A,B,C,D		542- 17
	♦CRY	
VM317,A,B,C,D		542- 18
	♦CRY	
VM318,A,B,C,D		542- 19
	♦CRY	
VM319,A,B,C,D		542- 20
	♦CRY	
VM320,A,B,C,D		542- 21
	♦CRY	
VM321,A,B,C,D		542- 22
	♦CRY	
VM322,A,B,C,D		542- 23
	♦CRY	
VM323,A,B,C,D		542- 24
	♦CRY	
VM324,A,B,C,D		542- 25
	♦CRY	
VM325,A,B,C,D		542- 26
	♦CRY	
VM326,A,B,C,D		542- 27
	♦CRY	
VM327,A,B,C,D		542- 28
	♦CRY	
VM328,A,B,C,D		542- 29
	♦CRY	
VM329,A,B,C,D		542- 30
	♦CRY	
VM330,A,B,C,D		542- 31
	♦CRY	
VM331,A,B,C,D		542- 32
	♦CRY	
VM332,A,B,C,D		542- 33
	♦CRY	
VM333,A,B,C,D		542- 34
	♦CRY	
VM334,A,B,C,D		542- 35
	♦CRY	
VM335,A,B,C,D		542- 36
	♦CRY	
VM401,A,B,C,D		546- 66
	♦CRY	
VM402,A,B,C,D		546- 67
	♦CRY	
VM403,A,B,C,D		546- 68
	♦CRY	
VM404,A,B,C,D		546- 69
	♦CRY	
VM405,A,B,C,D		546- 70
	♦CRY	
VM406,A,B,C,D		546- 71
	♦CRY	
VM407,A,B,C,D		546- 72
	♦CRY	
VM408,A,B,C,D		546- 73
	♦CRY	
VM409,A,B,C,D		546- 74
	♦CRY	
VM410,A,B,C,D		546- 75
	♦CRY	
VM411,A,B,C,D		546- 76
	♦CRY	
VM412,A,B,C,D		546- 77
	♦CRY	
VM413,A,B,C,D		546- 78
	♦CRY	
VM414,A,B,C,D		546- 79
	♦CRY	
VM415,A,B,C,D		546- 80
	♦CRY	
VM416,A,B,C,D		546- 81
	♦CRY	
VM417,A,B,C,D		546- 82
	♦CRY	
VM418,A,B,C,D		546- 83
	♦CRY	

Δ-Registered with JEDEC by this manufacturer

♦-Copy of mfr's data sheet may be ordered from D.A.T.A.

1. TYPE No. CROSS INDEX

IN TYPE NUMBER SEQUENCE

TYPE No.	MFRS	Pg&Line
VM419,A,B,C,D	♦CRY	546- 84
VM420,A,B,C,D	♦CRY	546- 85
VM421,A,B,C,D	♦CRY	546- 86
VM422,A,B,C,D	♦CRY	546- 87
VM423,A,B,C,D	♦CRY	546- 88
VM424,A,B,C,D	♦CRY	546- 89
VM425,A,B,C,D	♦CRY	546- 90
VM426,A,B,C,D	♦CRY	546- 91
VM427,A,B,C,D	♦CRY	546- 92
VM428,A,B,C,D	♦CRY	546- 93
VM429,A,B,C,D	♦CRY	546- 94
VM430,A,B,C,D	♦CRY	546- 95
VM431,A,B,C,D	♦CRY	546- 96
VM432,A,B,C,D	♦CRY	546- 97
VM433,A,B,C,D	♦CRY	546- 98
VM434,A,B,C,D	♦CRY	546- 99
VM435,A,B,C,D	♦CRY	546-100
VM502,A,B,C,D	♦CRY	550-107
VM503,A,B,C,D	♦CRY	550-108
VM504,A,B,C,D	♦CRY	550-109
VM505,A,B,C,D	♦CRY	550-110
VM506,A,B,C,D	♦CRY	551- 1
VM507,A,B,C,D	♦CRY	551- 2
VM508,A,B,C,D	♦CRY	551- 3
VM509,A,B,C,D	♦CRY	551- 4
VM510,A,B,C,D	♦CRY	551- 5
VM511,A,B,C,D	♦CRY	551- 6
VM512,A,B,C,D	♦CRY	551- 7
VM513,A,B,C,D	♦CRY	551- 8
VM514,A,B,C,D	♦CRY	551- 9
VM515,A,B,C,D	♦CRY	551- 10
VM516,A,B,C,D	♦CRY	551- 11
VM517,A,B,C,D	♦CRY	551- 12
VM518,A,B,C,D	♦CRY	551- 13
VM519,A,B,C,D	♦CRY	551- 14
VM520,A,B,C,D	♦CRY	551- 15
VM521,A,B,C,D	♦CRY	551- 16
VM522,A,B,C,D	♦CRY	551- 17
VM523,A,B,C,D	♦CRY	551- 18
VM524,A,B,C,D	♦CRY	551- 19
VM525,A,B,C,D	♦CRY	551- 20
VM526,A,B,C,D	♦CRY	551- 21
VM527,A,B,C,D	♦CRY	551- 22
VM528,A,B,C,D	♦CRY	551- 23
VM529,A,B,C,D	♦CRY	551- 24
VM530,A,B,C,D	♦CRY	551- 25
VM531,A,B,C,D	♦CRY	551- 26
VM532,A,B,C,D	♦CRY	551- 27
VM533,A,B,C,D	♦CRY	551- 28
VM534,A,B,C,D	♦CRY	551- 29
VM535,A,B,C,D	♦CRY	551- 30
VM603,A,B,C,D	♦CRY	555- 4
VM604,A,B,C,D	♦CRY	555- 5
VM605,A,B,C,D	♦CRY	555- 6
VM608,A,B,C,D	♦CRY	555- 7
VM609,A,B,C,D	♦CRY	555- 8
VM610,A,B,C,D	♦CRY	555- 9
VM611,A,B,C,D	♦CRY	555- 10
VM612,A,B,C,D	♦CRY	555- 11
VM613,A,B,C,D	♦CRY	555- 12
VM614,A,B,C,D	♦CRY	555- 13
VM615,A,B,C,D	♦CRY	555- 14
VM616,A,B,C,D	♦CRY	555- 15
VM617,A,B,C,D	♦CRY	555- 16
VM618,A,B,C,D	♦CRY	555- 17
VM619,A,B,C,D	♦CRY	555- 18
VM620,A,B,C,D	♦CRY	555- 19
VM621,A,B,C,D	♦CRY	555- 20
VM622,A,B,C,D	♦CRY	555- 21
VM623,A,B,C,D	♦CRY	555- 22
VM624,A,B,C,D	♦CRY	555- 23
VM625,A,B,C,D	♦CRY	555- 24
VM626,A,B,C,D	♦CRY	555- 25
VM627,A,B,C,D	♦CRY	555- 26
VM628,A,B,C,D	♦CRY	555- 27
VM629,A,B,C,D	♦CRY	555- 28
VM630,A,B,C,D	♦CRY	555- 29
VM631,A,B,C,D	♦CRY	555- 30
VM632,A,B,C,D	♦CRY	555- 31
VM633,A,B,C,D	♦CRY	555- 32
VM634,A,B,C,D	♦CRY	555- 33
VM635,A,B,C,D	♦CRY	555- 34
VM704,A,B,C,D	♦CRY	558- 38
VM705,A,B,C,D	♦CRY	558- 39
VM709,A,B,C,D	♦CRY	558- 40
VM710,A,B,C,D	♦CRY	558- 41
VM711,A,B,C,D	♦CRY	558- 42
VM714,A,B,C,D	♦CRY	558- 43
VM715,A,B,C,D	♦CRY	558- 44
VM716,A,B,C,D	♦CRY	558- 45
VM717,A,B,C,D	♦CRY	558- 46
VM718,A,B,C,D	♦CRY	558- 47
VM719,A,B,C,D	♦CRY	558- 48
VM720,A,B,C,D	♦CRY	558- 49
VM721,A,B,C,D	♦CRY	558- 50
VM722,A,B,C,D	♦CRY	558- 51
VM723,A,B,C,D	♦CRY	558- 52
VM724,A,B,C,D	♦CRY	558- 53
VM725,A,B,C,D	♦CRY	558- 54
VM726,A,B,C,D	♦CRY	558- 55
VM727,A,B,C,D	♦CRY	558- 56
VM728,A,B,C,D	♦CRY	558- 57
VM729,A,B,C,D	♦CRY	558- 58
VM730,A,B,C,D	♦CRY	558- 59
VM731,A,B,C,D	♦CRY	558- 60
VM732,A,B,C,D	♦CRY	558- 61
VM733,A,B,C,D	♦CRY	558- 62
VM734,A,B,C,D	♦CRY	558- 63
VM735,A,B,C,D	♦CRY	558- 64
VM816,A,B,C,D	♦CRY	560- 78
VM817,A,B,C,D	♦CRY	560- 79
VM821,A,B,C,D	♦CRY	560- 80
VM822,A,B,C,D	♦CRY	560- 81
VM823,A,B,C,D	♦CRY	560- 82
VM824,A,B,C,D	♦CRY	560- 83
VM825,A,B,C,D	♦CRY	560- 84
VM826,A,B,C,D	♦CRY	560- 85
VM827,A,B,C,D	♦CRY	560- 86
VM828,A,B,C,D	♦CRY	560- 87
VM829,A,B,C,D	♦CRY	560- 88
VM830,A,B,C,D	♦CRY	560- 89
VM831,A,B,C,D	♦CRY	560- 90
VM832,A,B,C,D	♦CRY	560- 91
VM833,A,B,C,D	♦CRY	560- 92
VM834,A,B,C,D	♦CRY	560- 93
VM835,A,B,C,D	♦CRY	560- 94
VM923,A,B,C,D	♦CRY	561- 63
VM926,A,B,C,D	♦CRY	561- 64
VM927,A,B,C,D	♦CRY	561- 65
VM928,A,B,C,D	♦CRY	561- 66
VM929,A,B,C,D	♦CRY	561- 67
VM932,A,B,C,D	♦CRY	561- 68
VM933,A,B,C,D	♦CRY	561- 69
VM934,A,B,C,D	♦CRY	561- 70
VM935,A,B,C,D	♦CRY	561- 71
VM973,A,B,C,D	♦CRY	562- 35
VM978,A,B,C,D	♦CRY	562- 36
VM979,A,B,C,D	♦CRY	562- 37
VM983,A,B,C,D	♦CRY	562- 38
VM984,A,B,C,D	♦CRY	562- 39
VM985,A,B,C,D	♦CRY	562- 40
VR5 6,A,B	♦SAR	173- 89
VR6,A,B	SAR	174- 11
VR6 2,A,B	♦SAR	175- 64
VR6 8,A,B	♦SAR	178- 21
VR7,A,B	SAR	178-181
VR7E	AEIL	178-186
VR7F	AEIL	178-184
VR7 5,A,B	♦SAR	180- 65
VR8E	AEIL	181- 70
VR8F	AEIL	181- 69
VR8.2,A,B	♦SAR	182-115
VR8 5,A,B	SAR	183-211
VR9E	AEIL	184-194
VR9F	AEIL	184-191
VR9 1,A,B	♦SAR	186- 46
VR10,A,B	♦SAR	188-129
VR10E	AEIL	189- 38
VR10F	AEIL	188-186
VR11,A,B	♦SAR	190-117
VR11E	AEIL	191- 20
VR11F	AEIL	190-173
VR12,A,B	♦SAR	193- 19
VR12E	AEIL	193-128
VR12F	AEIL	193- 79
VR13,A,B	♦SAR	195- 56
VR13E	AEIL	195-151
VR13F	AEIL	195-108
VR14,A,B	SAR	196- 93
VR15,A,B	♦SAR	198- 25
VR15E	AEIL	198-128
VR15F	AEIL	198- 81
VR16,A,B	♦SAR	200- 5
VR16E	AEIL	200- 90
VR16F	AEIL	200- 55
VR18,A,B	♦SAR	202-117
VR18E	AEIL	203- 20
VR18F	AEIL	202-171
VR20,A,B	♦SAR	205- 58
VR20E	AEIL	205-157
VR20F	AEIL	205-111
VR22,A,B	♦SAR	207- 41
VR22E	AEIL	207-143
VR22F	AEIL	207- 96
VR24,A,B	♦SAR	209- 24
VR24E	AEIL	209-118
VR24F	AEIL	209- 74
VR27,A,B	♦SAR	211-106
VR27E	AEIL	212- 14
VR27F	AEIL	211-162
VR28,A,B	SAR	212-120
VR30,A,B	♦SAR	213-104
VR30E	AEIL	214- 18
VR30F	AEIL	213-157
VR33,A,B	♦SAR	215- 71
VR35E	AEIL	167-105
VR35F	AEIL	167-104
VR36,A,B	♦SAR	216-173
VR39,A,B	♦SAR	218- 70
VR43,A,B	♦SAR	219-146
VR47,A,B	♦SAR	221- 87
VR51,A,B	♦SAR	223- 35
VR56,A,B	♦SAR	224-119
VR60	NECJ	582- 72
	SAKJ	
VR61	NECJ	582- 73
	SAKJ	
VR62,A,B	♦SAR	226- 66
VR67,A,B	SAR	227- 9
VR68,A,B	♦SAR	227-124
VR75,A,B	♦SAR	229- 40
VR80,A,B	SAR	229-190
VR82,A,B	♦SAR	230-119
VR90,A,B	SAR	231-120
VR91,A,B	♦SAR	232- 55
VR100,A,B	♦SAR	233-102
VR100X	♦VARO	304- 8
VR105,A,B	SAR	234-106
VR110,A,B	♦SAR	235- 66
VR120,A,B	♦SAR	236- 90
VR130,A,B	♦SAR	237-127
VR150,A,B	♦SAR	239-106
VR160,A,B	♦SAR	240-128
VR180,A,B	♦SAR	242- 69
VR200,A,B	♦SAR	243-109
VR200X	♦VARO	315- 33
VR400X	♦VARO	334- 32
VR425E	AEIL	169- 50
VR425F	AEIL	169- 49
VR475E	AEIL	171- 34
VR475F	AEIL	171- 33
VR525E	AEIL	172- 65
VR525F	AEIL	172- 64
VR575E	AEIL	173-154
VR575F	AEIL	173-153
VR625E	AEIL	175-129
VR625F	AEIL	175-128
VRA100X	♦VARO	304- 9
VRA200X	♦VARO	315- 34
VRA400X	♦VARO	334- 33
VRB100X	♦VARO	304- 10
VRB200X	♦VARO	315- 35
VRB400X	♦VARO	334- 34
VRC100X	♦VARO	304- 11
VRC200X	♦VARO	315- 36
VRC400X	♦VARO	334- 35
VRD100X	♦VARO	304- 12
VRD200X	♦VARO	315- 37
VRD400X	♦VARO	334- 36
VRE100X	♦VARO	303- 55
VRE200X	♦VARO	314- 69
VRE400X	♦VARO	333- 60
VRF100X	♦VARO	303- 56
VRF200X	♦VARO	314- 70
VRF400X	♦VARO	333- 61
VRG100X	♦VARO	303- 57
VRG200X	♦VARO	314- 71
VRG400X	♦VARO	333- 62
VS148	♦VARO	302- 49
VS148X	♦VARO	302- 47
VS247	♦VARO	313- 53
VS248	♦VARO	313- 54
VS248X	♦VARO	313- 51
VS447	♦VARO	332- 39
VS448	♦VARO	332- 40
VS448X	♦VARO	332- 37
VS500	SCN	343- 31
VS600	SCN	352- 5
VS647	♦VARO	349- 59
VS648	♦VARO	349- 60
VSD201N10	VARM	592- 10
VSD201N19	VARM	592- 11
VSD201N20	VARM	592- 12
VSD203N19	VARM	592- 13
VSD203N20	VARM	592- 14
VSD211N10	VARM	592- 15
VSD211N19	VARM	592- 16
VSD211N20	VARM	592- 17
VSD501N10	VARM	592- 18
VSD501N19	VARM	592- 19
VSD501N20	VARM	592- 20
VSD502N10	VARM	592- 21
VSD502N19	VARM	592- 22
VSD502N20	VARM	592- 23
VSD503N19	VARM	592- 24
VSD503N20	VARM	592- 25
VSD521N10	VARM	592- 26
VSD521N19	VARM	592- 27
VSD521N20	VARM	592- 28
VSD522N10	VARM	592- 29
VSD522N19	VARM	592- 30
VSD522N20	VARM	592- 31
VSD523N19	VARM	592- 32
VSD523N20	VARM	592- 33
VSD701N19	VARM	592- 34
VSD701N20	VARM	592- 35
VSD702N19	VARM	592- 36
VSD702N20	VARM	592- 37
VSD721N19	VARM	592- 38
VSD721N20	VARM	592- 39
VSD722N19	VARM	592- 40
VSD722N20	VARM	592- 41
VT1 5040	♦VAC	597- 95
VT005-8	♦VAC	597- 96
VT10L	♦VAC	578- 40
VT14L	♦VAC	578- 41
VT21K	♦VAC	597- 97
VT21M	♦VAC	597- 98
VT23L	♦VAC	578- 42
VT030-18A	♦VAC	597- 99
VT30L	VAC	578- 43
VT31K	♦VAC	597-100
VT31M	♦VAC	597-101
VT32L	VAC	578- 44
VT34L2	VAC	578- 45
VT34L	VAC	578- 46
VT50L	VAC	578- 47
VT51L	VAC	578- 48
VT54L	VAC	578- 49
VT70L	♦VAC	578- 50
VT74L	♦VAC	578- 51
VT82L	VAC	578- 52
VT93L	♦VAC	578- 53
VT101	♦VAC	578- 54
VT101H	♦VAC	578- 55
VT102	♦VAC	578- 56
VT102L	♦VAC	578- 57
VT103	♦VAC	578- 58
VT103L	♦VAC	578- 59
VT104	♦VAC	578- 60
VT111	♦VAC	578- 61
VT111H	♦VAC	578- 62
VT112	♦VAC	578- 63
VT112L	♦VAC	578- 64
VT113	♦VAC	578- 65
VT113L	♦VAC	578- 66
VT121	♦VAC	578- 67
VT121H	♦VAC	578- 68
VT122	♦VAC	578- 69
VT122L	♦VAC	578- 70
VT123	♦VAC	578- 71
VT123L	♦VAC	578- 72
VT124	♦VAC	578- 73
VT132	♦VAC	578- 74
VT133	♦VAC	578- 75
VT133L	♦VAC	578- 76
VT141	♦VAC	578- 77
VT141H	♦VAC	578- 78
VT142	♦VAC	578- 79
VT142L	♦VAC	578- 80
VT143	♦VAC	578- 81
VT143L	♦VAC	578- 82
VT200	♦VARO	316- 48
VT201	♦VAC	578- 83
VT202	♦VAC	578- 84
VT202H	♦VAC	578- 85
VT203	♦VAC	578- 86
VT203H	♦VAC	578- 87
VT204	♦VAC	578- 88
VT204L	♦VAC	578- 89
VT205	♦VAC	578- 90
VT211	♦VAC	578- 91
VT211H	♦VAC	578- 92
VT212	♦VAC	578- 93
VT212L	♦VAC	578- 94
VT213	♦VAC	578- 95
VT213H	♦VAC	578- 96
VT213L	♦VAC	578- 97
VT214	♦VAC	578- 98
VT214L	♦VAC	578- 99
VT221	♦VAC	578-100
VT222	♦VAC	578-101
VT222H	♦VAC	578-102
VT223	♦VAC	578-103
VT223H	♦VAC	578-104
VT224	♦VAC	578-105
VT224L	♦VAC	578-106
VT225	♦VAC	578-107
VT231	♦VAC	578-108
VT232	♦VAC	578-109
VT233	♦VAC	578-110
VT233L	♦VAC	579- 1
VT234	♦VAC	579- 2
VT235	♦VAC	579- 3
VT241	♦VAC	579- 4
VT241H	♦VAC	579- 5
VT242	♦VAC	579- 6
VT242H	♦VAC	579- 7
VT242L	♦VAC	579- 8
VT301	VAC	579- 9
VT301H	VAC	579- 10
VT302	VAC	579- 11
VT302-2	VAC	579- 12
VT302L	VAC	579- 13
VT303	VAC	579- 14
VT303L2	VAC	579- 15
VT303L	VAC	579- 16
VT304	VAC	579- 17
VT305	VAC	579- 18
VT311	VAC	579- 19
VT311L	VAC	579- 20
VT312	VAC	579- 21
VT312-2	VAC	579- 22
VT312H	VAC	579- 23
VT312L	VAC	579- 24
VT313L2	VAC	579- 25
VT313L	VAC	579- 26
VT314	VAC	579- 27
VT321	VAC	579- 28
VT321H	VAC	579- 29
VT322	VAC	579- 30
VT322L	VAC	579- 31
VT325	VAC	579- 32
VT333	VAC	579- 33
VT333L	VAC	579- 34
VT334-2I	♦VAC	579- 35
VT334-2IA	♦VAC	579- 36
VT334-2IB	♦VAC	579- 37
VT341	VAC	579- 38
VT341-2	VAC	579- 39
VT341H	VAC	579- 40
VT342	VAC	579- 41
VT342L	VAC	579- 42
VT343	VAC	579- 43
VT343L	VAC	579- 44
VT400	♦VARO	335- 51
VT501	VAC	579- 45
VT501H	VAC	579- 46
VT502	VAC	579- 47

Δ-Registered with JEDEC by this manufacturer

♦-Copy of mfr's data sheet may be ordered from D.A.T.A.

1. TYPE No. CROSS INDEX

IN TYPE NUMBER SEQUENCE

TYPE No.	MFRS	Pg&Line
VT502L	VAC	579- 48
VT503	VAC	579- 49
VT503L	VAC	579- 50
VT511	VAC	579- 51
VT511H	VAC	579- 52
VT511L	VAC	579- 53
VT512L	VAC	579- 54
VT521	VAC	579- 55
VT521H	VAC	579- 56
VT522	VAC	579- 57
VT522L	VAC	579- 58
VT523L	VAC	579- 59
VT533	VAC	579- 60
VT533L	VAC	579- 61
VT541	VAC	579- 62
VT541H	VAC	579- 63
VT542	VAC	579- 64
VT542L	VAC	579- 65
VT600	♦VARO	352- 45
VT701	♦VAC	579- 66
VT701E	♦VAC	579- 67
VT702E	♦VAC	579- 68
VT712E	♦VAC	579- 69
VT721	♦VAC	579- 70
VT721H	♦VAC	579- 71
VT721HE	♦VAC	579- 72
VT732	♦VAC	579- 73
VT732E	♦VAC	579- 74
VT741	♦VAC	579- 75
VT741E	♦VAC	579- 76
VT801	VAC	579- 77
VT804	VAC	579- 78
VT833	VAC	579- 79
VT835	VAC	579- 80
VT841L	VAC	579- 81
VT901	♦VAC	579- 82
VT902	♦VAC	579- 83
VT903H	♦VAC	579- 84
VT904	♦VAC	579- 85
VT904L	♦VAC	579- 86
VT912	♦VAC	579- 87
VT912L	♦VAC	579- 88
VT913H	♦VAC	579- 89
VT914	♦VAC	579- 90
VT914L	♦VAC	579- 91
VT931	♦VAC	579- 92
VT932	♦VAC	579- 93
VT941	♦VAC	579- 94
VT6005	♦VAC	597-102
VT10030	♦VAC	597-103
VT10150	♦VAC	597-104
VT120020N	♦VAC	597-105
VT120100N	♦VAC	597-106
VTA200	♦VARO	316- 49
VTA400	♦VARO	335- 52
VTA600	♦VARO	352- 46
VTB200	♦VARO	316- 50
VTB400	♦VARO	335- 53
VTB600	♦VARO	352- 47
VTC200	♦VARO	316- 51
VTC400	♦VARO	335- 54
VTC600	♦VARO	352- 48
VTD200	♦VARO	316- 52
VTD400	♦VARO	335- 55
VTD600	♦VARO	352- 49
VTE200	♦VARO	315- 83
VTE400	♦VARO	334- 90
VTE600	♦VARO	351- 97
VTF200	♦VARO	315- 84
VTF400	♦VARO	334- 91
VTF600	♦VARO	351- 98
VTG200	♦VARO	315- 85
VTG400	♦VARO	334- 92
VTG600	♦VARO	351- 99
VTL1A1	♦VAC	597-107
VTL1A2	♦VAC	597-108
VTL1A3	♦VAC	597-109
VTL1A4	♦VAC	597-110
VTL1B5	♦VAC	598- 1
VTL1B6	♦VAC	598- 2
VTL2C1	♦VAC	598- 3
VTL2C2	♦VAC	598- 4
VTL2C3	♦VAC	598- 5
VTL2C4	♦VAC	598- 6
VTL7A1	♦VAC	598- 7
VVC201,A,B,C,D	♦CODI	538- 41
VVC202,A,B,C,D	♦CODI	538- 42
VVC203,A,B,C,D	♦CODI	542- 37
VVC204,A,B,C,D	♦CODI	542- 38
VVC205,A,B,C,D	♦CODI	543-106
VVC206,A,B,C,D	♦CODI	543-107
VVC207,A,B,C,D	♦CODI	546-101
VVC208,A,B,C,D	♦CODI	546-102
VVC209,A,B,C,D	♦CODI	548- 91
VVC210,A,B,C,D	♦CODI	548- 92
VVC211,A,B,C,D	♦CODI	552- 82
VVC212,A,B,C,D	♦CODI	552- 83
VVC213,A,B,C,D	♦CODI	555- 35
VVC214,A,B,C,D	♦CODI	555- 36
VVC215,A,B,C,D	♦CODI	556- 49
VVC216,A,B,C,D	♦CODI	556- 50
VVC217,A,B,C,D	♦CODI	558- 65
VVC218,A,B,C,D	♦CODI	558- 66
VVC219,A,B,C,D	♦CODI	559- 67
VVC220,A,B,C,D	♦CODI	559- 68
VVC221,A,B,C,D	♦CODI	560- 95
VVC222,A,B,C,D	♦CODI	561- 72
VVC223,A,B,C,D	♦CODI	562- 41
VVC401,A,B,C,D	♦CODI	542- 39
VVC402,A,B,C,D	♦CODI	551- 31
VVC403,A,B,C,D	♦CODI	542- 40
VVC404,A,B,C,D	♦CODI	551- 32
VVC405,A,B,C,D	♦CODI	546-103
VVC406,A,B,C,D	♦CODI	546-104
VVC407,A,B,C,D	♦CODI	546-105
VVC408,A,B,C,D	♦CODI	546-106
VVC409,A,B,C,D	♦CODI	555- 37
VVC410,A,B,C,D	♦CODI	555- 38
VVC411,A,B,C,D	♦CODI	555- 39
VVC412,A,B,C,D	♦CODI	542- 41
VVC413,A,B,C,D	♦CODI	551- 33
VVC414,A,B,C,D	♦CODI	558- 67
VVC415,A,B,C,D	♦CODI	551- 34
VVC416,A,B,C,D	♦CODI	558- 68
VVC417,A,B,C,D	♦CODI	536- 17
VVC418,A,B,C,D	♦CODI	536- 18
VVC419,A,B,C,D	♦CODI	536- 19
VVC700,A,B,C,D	♦CODI	537- 66
VVC701,A,B,C,D	♦CODI	537- 67
VVC702,A,B,C,D	♦CODI	537- 68
VVC703,A,B,C,D	♦CODI	537- 69
VVC704,A,B,C,D	♦CODI	538- 43
VVC705,A,B,C,D	♦CODI	542- 42
VVC706,A,B,C,D	♦CODI	542- 43
VVC707,A,B,C,D	♦CODI	546-107
VVC708,A,B,C,D	♦CODI	548- 93
VVC709,A,B,C,D	♦CODI	548- 94
VVC710,A,B,C,D	♦CODI	551- 35
VVC711,A,B,C,D	♦CODI	552- 84
VVC712,A,B,C,D	♦CODI	555- 40
VVC713,A,B,C,D	♦CODI	555- 41
VVC714,A,B,C,D	♦CODI	556- 51
VVC715,A,B,C,D	♦CODI	558- 69
VVC716,A,B,C,D	♦CODI	558- 70
VVC717,A,B,C,D	♦CODI	560- 96
VVC718,A,B,C,D	♦CODI	561- 73
VVC719,A,B,C,D	♦CODI	561- 74
VVC720,A,B,C,D	♦CODI	562- 42
VVC721,A,B,C,D	♦CODI	537- 70
VVC722,A,B,C,D	♦CODI	538- 44
VVC723,A,B,C,D	♦CODI	555- 42
VVC724,A,B,C,D	♦CODI	558- 71
VVC725,A,B,C,D	♦CODI	558- 72
VVC726,A,B,C,D	♦CODI	537- 71
VVC727,A,B,C,D	♦CODI	539- 50
VVC728,A,B,C,D	♦CODI	539- 51
VVC729,A,B,C,D	♦CODI	542- 44
VVC730,A,B,C,D	♦CODI	542- 45
VVC731,A,B,C,D	♦CODI	543-108
VVC732,A,B,C,D	♦CODI	544- 1
VVC733,A,B,C,D	♦CODI	546-108
VVC734,A,B,C,D	♦CODI	547- 1
VVC735,A,B,C,D	♦CODI	547- 2
VVC736,A,B,C,D	♦CODI	548- 19
VVC737,A,B,C,D	♦CODI	548- 20
VVC738,A,B,C,D	♦CODI	548- 21
VVC739,A,B,C,D	♦CODI	548- 95
VVC740,A,B,C,D	♦CODI	548- 96
VVC741,A,B,C,D	♦CODI	551- 36
VVC742,A,B,C,D	♦CODI	551- 37
VVC743,A,B,C,D	♦CODI	551- 38
VVC744,A,B,C,D	♦CODI	552- 85
VVC745,A,B,C,D	♦CODI	552- 86
VVC746,A,B,C,D	♦CODI	552- 87
VVC747,A,B,C,D	♦CODI	555- 43
VVC748,A,B,C,D	♦CODI	555- 44
VVC749,A,B,C,D	♦CODI	555- 45
VVC750,A,B,C,D	♦CODI	556- 52
VVC751,A,B,C,D	♦CODI	556- 53
VVC752,A,B,C,D	♦CODI	556- 54
VVC753,A,B,C,D	♦CODI	558- 73
VVC754,A,B,C,D	♦CODI	558- 74
VVC755,A,B,C,D	♦CODI	558- 75
VVC756,A,B,C,D	♦CODI	559- 69
VVC757,A,B,C,D	♦CODI	559- 70
VVC758,A,B,C,D	♦CODI	559- 71
VVC759,A,B,C,D	♦CODI	560- 97
VVC760,A,B,C,D	♦CODI	560- 98
VVC761,A,B,C,D	♦CODI	560- 99
VVC762,A,B,C,D	♦CODI	560-100
VVC763,A,B,C,D	♦CODI	561- 75
VVC764,A,B,C,D	♦CODI	561- 76
VVC765,A,B,C,D	♦CODI	561- 77
VVC766,A,B,C,D	♦CODI	562- 43
VVC767,A,B,C,D	♦CODI	562- 44
VVC768,A,B,C,D	♦CODI	562- 45
VVC769,A,B,C,D	♦CODI	528- 5
VVC770,A,B,C,D	♦CODI	528- 6
VVC771,A,B,C,D	♦CODI	528- 7
VVC772,A,B,C,D	♦CODI	528- 8
VVC773,A,B,C,D	♦CODI	529- 15
VVC774,A,B,C,D	♦CODI	529- 16
VVC775,A,B,C,D	♦CODI	529- 17
VVC776,A,B,C,D	♦CODI	529- 18
VVC777,A,B,C,D	♦CODI	531- 47
VVC778,A,B,C,D	♦CODI	531- 48
VVC779,A,B,C,D	♦CODI	531- 49
VVC780,A,B,C,D	♦CODI	533- 16
VVC781,A,B,C,D	♦CODI	533- 17
VVC782,A,B,C,D	♦CODI	533- 18
VVC783,A,B,C,D	♦CODI	534- 89
VVC784,A,B,C,D	♦CODI	534- 90
VVC785,A,B,C,D	♦CODI	534- 91
VVC786,A,B,C,D	♦CODI	534- 92
VVC788,A,B,C,D	♦CODI	531- 50
VVC789,A,B,C,D	♦CODI	538- 45
VVC790,A,B,C,D	♦CODI	538- 46
VVC791,A,B,C,D	♦CODI	538- 47
VVC792,A,B,C,D	♦CODI	538- 48
VVC793,A,B,C,D	♦CODI	538- 49
VVC794,A,B,C,D	♦CODI	539- 65
VVC795,A,B,C,D	♦CODI	542- 46
VVC796,A,B,C,D	♦CODI	542- 47
VVC797,A,B,C,D	♦CODI	542- 48
VVC798,A,B,C,D	♦CODI	542- 49
VVC799,A,B,C,D	♦CODI	542- 50
VVC810,A,B,C,D	♦CODI	544- 2
VVC811,A,B,C,D	♦CODI	544- 3
VVC812,A,B,C,D	♦CODI	544- 36
VVC813,A,B,C,D	♦CODI	547- 3
VVC814,A,B,C,D	♦CODI	547- 4
VVC815,A,B,C,D	♦CODI	549- 15
VVC816,A,B,C,D	♦CODI	551- 39
VVC817,A,B,C,D	♦CODI	551- 40
VVC818,A,B,C,D	♦CODI	552- 2
VVC819,A,B,C,D	♦CODI	552- 3
VVC820,A,B,C,D	♦CODI	552- 88
VVC821,A,B,C,D	♦CODI	552- 89
VVC822,A,B,C,D	♦CODI	555- 46
VVC823,A,B,C,D	♦CODI	555- 47
VVC824,A,B,C,D	♦CODI	555- 48
VVC825,A,B,C,D	♦CODI	555- 49
VVC826,A,B,C,D	♦CODI	556- 55
VVC827,A,B,C,D	♦CODI	556- 56
VVC828,A,B,C,D	♦CODI	556- 73
VVC829,A,B,C,D	♦CODI	558- 76
VVC830,A,B,C,D	♦CODI	558- 77
VVC831,A,B,C,D	♦CODI	559- 72
VVC832,A,B,C,D	♦CODI	559- 73
VVC833,A,B,C,D	♦CODI	560-101
VVC834,A,B,C,D	♦CODI	560-102
VVC835,A,B,C,D	♦CODI	560-103
VVC836,A,B,C,D	♦CODI	561- 78
VVC837,A,B,C,D	♦CODI	561- 79
VVC838,A,B,C,D	♦CODI	561- 84
VVC839,A,B,C,D	♦CODI	562- 46
VVC840,A,B,C,D	♦CODI	562- 65
VVC841,A,B,C,D	♦CODI	562- 75
VVC842,A,B,C,D	♦CODI	562- 91
VVC843,A,B,C,D	♦CODI	562- 98
VVC844,A,B,C,D	♦CODI	563- 10
VVC845,A,B,C,D	♦CODI	563- 18
VVC846,A,B,C,D	♦CODI	538- 50
VVC847,A,B,C,D	♦CODI	538- 51
VVC848,A,B,C,D	♦CODI	538- 52
VVC849,A,B,C,D	♦CODI	538- 53
VVC850,A,B,C,D	♦CODI	542- 51
VVC851,A,B,C,D	♦CODI	542- 52
VVC852,A,B,C,D	♦CODI	542- 53
VVC853,A,B,C,D	♦CODI	542- 54
VVC854,A,B,C,D	♦CODI	533- 81
VVC855,A,B,C,D	♦CODI	547- 5
VVC856,A,B,C,D	♦CODI	547- 6
VVC857,A,B,C,D	♦CODI	547- 7
VVC858,A,B,C,D	♦CODI	547- 8
VVC859,A,B,C,D	♦CODI	547- 9
VVC861,A,B,C,D	♦CODI	548- 22
VVC862,A,B,C,D	♦CODI	551- 41
VVC863,A,B,C,D	♦CODI	551- 42
VVC864,A,B,C,D	♦CODI	551- 43
VVC865,A,B,C,D	♦CODI	551- 44
VVC866,A,B,C,D	♦CODI	551- 45
VVC868,A,B,C,D	♦CODI	552- 90
VVC869,A,B,C,D	♦CODI	555- 50
VVC870,A,B,C,D	♦CODI	555- 51
VVC871,A,B,C,D	♦CODI	555- 52
VVC872,A,B,C,D	♦CODI	555- 53
VVC873,A,B,C,D	♦CODI	555- 54
VVC874,A,B,C,D	♦CODI	556- 57
VVC875,A,B,C,D	♦CODI	558- 78
VVC876,A,B,C,D	♦CODI	558- 79
VVC877,A,B,C,D	♦CODI	558- 80
VVC878,A,B,C,D	♦CODI	558- 81
VVC879,A,B,C,D	♦CODI	560-104
VVC880,A,B,C,D	♦CODI	562- 47
VVC881,A,B,C,D	♦CODI	562- 48
VVC882,A,B,C,D	♦CODI	563- 19
VVC883,A,B,C,D	♦CODI	563- 27
VVC884,A,B,C,D	♦CODI	563- 29
VVC885,A,B,C,D	♦CODI	563- 44
VVC886,A,B,C,D	♦CODI	563- 50
VVC887,A,B,C,D	♦CODI	563- 53
VVC888,A,B,C,D	♦CODI	563- 59
VVC889,A,B,C,D	♦CODI	559-102
VVC890,A,B,C,D	♦CODI	559-103
VVC891,A,B,C,D	♦CODI	559-104
VVC892,A,B,C,D	♦CODI	559-105
VVC893,A,B,C,D	♦CODI	559-106
VVC894,A,B,C,D	♦CODI	559-107
VVC895,A,B,C,D	♦CODI	559-108
VVC896,A,B,C,D	♦CODI	560- 1
VVC897,A,B,C,D	♦CODI	560- 2
VVC898,A,B,C,D	♦CODI	560- 3
VVC899,A,B,C,D	♦CODI	562- 49
VVC900,A,B,C,D	♦CODI	562- 50
VVC901,A,B,C,D	♦CODI	562- 76
VVC902,A,B,C,D	♦CODI	562- 77
VVC903,A,B,C,D	♦CODI	562-104
VVC904,A,B,C,D	♦CODI	562-105
VVC905,A,B,C,D	♦CODI	563- 23
VVC906,A,B,C,D	♦CODI	563- 24
VVC907,A,B,C,D	♦CODI	563- 32
VVC908,A,B,C,D	♦CODI	563- 33
VVC909,A,B,C,D	♦CODI	563- 60
VVC910,A,B,C,D	♦CODI	542- 55
VVC911,A,B,C,D	♦CODI	542- 56
VVC912,A,B,C,D	♦CODI	542- 57

△-Registered with JEDEC by this manufacturer

♦-Copy of mfr's data sheet may be ordered from D.A.T.A.

1. TYPE No. CROSS INDEX

IN TYPE NUMBER SEQUENCE

TYPE No.	MFRS	Pg&Line
VVC913,A,B,C,D	♦ CODI	542 - 58
VVC914,A,B,C,D	♦ CODI	542 - 59
VVC915,A,B,C,D	♦ CODI	542 - 60
VVC916,A,B,C,D	♦ CODI	547 - 10
VVC917,A,B,C,D	♦ CODI	547 - 11
VVC918,A,B,C,D	♦ CODI	547 - 12
VVC919,A,B,C,D	♦ CODI	547 - 13
VVC920,A,B,C,D	♦ CODI	547 - 14
VVC921,A,B,C,D	♦ CODI	547 - 15
VVC922,A,B,C,D	♦ CODI	548 - 97
VVC923,A,B,C,D	♦ CODI	548 - 98
VVC924,A,B,C,D	♦ CODI	551 - 46
VVC925,A,B,C,D	♦ CODI	551 - 47
VVC926,A,B,C,D	♦ CODI	551 - 48
VVC927,A,B,C,D	♦ CODI	551 - 49
VVC928,A,B,C,D	♦ CODI	551 - 50
VVC929,A,B,C,D	♦ CODI	551 - 51
VVC930,A,B,C,D	♦ CODI	552 - 91
VVC931,A,B,C,D	♦ CODI	552 - 92
VVC932,A,B,C,D	♦ CODI	555 - 55
VVC933,A,B,C,D	♦ CODI	555 - 56
VVC934,A,B,C,D	♦ CODI	555 - 57
VVC935,A,B,C,D	♦ CODI	555 - 58
VVC936,A,B,C,D	♦ CODI	555 - 59
VVC937,A,B,C,D	♦ CODI	555 - 60
VVC938,A,B,C,D	♦ CODI	555 - 61
VVC939,A,B,C,D	♦ CODI	555 - 62
VVC940,A,B,C,D	♦ CODI	555 - 63
VVC941,A,B,C,D	♦ CODI	556 - 58
VVC942,A,B,C,D	♦ CODI	556 - 59
VVC943,A,B,C,D	♦ CODI	558 - 82
VVC944,A,B,C,D	♦ CODI	558 - 83
VVC945,A,B,C,D	♦ CODI	558 - 84
VVC946,A,B,C,D	♦ CODI	558 - 85
VVC947,A,B,C,D	♦ CODI	558 - 86
VVC948,A,B,C,D	♦ CODI	558 - 87
VVC949,A,B,C,D	♦ CODI	558 - 88
VVC950,A,B,C,D	♦ CODI	558 - 89
VVC951,A,B,C,D	♦ CODI	559 - 74
VVC952,A,B,C,D	♦ CODI	560 -105
VVC953,A,B,C,D	♦ CODI	561 - 80
VVC954,A,B,C,D	♦ CODI	562 - 51
VVC955,A,B,C,D	♦ CODI	547 - 16
VVC957,A,B,C,D	♦ CODI	547 - 17
VVC958,A,B,C,D	♦ CODI	548 - 99
VVC1001,A,B,C,D	♦ CODI	531 - 51
VVC1002,A,B,C,D	♦ CODI	533 - 82
VVC1003,A,B,C,D	♦ CODI	537 - 72
VVC1004,A,B,C,D	♦ CODI	542 - 61
VVC1005,A,B,C,D	♦ CODI	544 - 4
VVC1006,A,B,C,D	♦ CODI	547 - 18
VVC1007,A,B,C,D	♦ CODI	548 - 23
VVC1008,A,B,C,D	♦ CODI	548 -100
VVC1009,A,B,C,D	♦ CODI	551 - 52
VVC1010,A,B,C,D	♦ CODI	552 - 93
VVC1011,A,B,C,D	♦ CODI	555 - 64
VVC1012,A,B,C,D	♦ CODI	556 - 60

TYPE No.	MFRS	Pg&Line
VVC1013,A,B,C,D	♦ CODI	558 - 90
VVC1014,A,B,C,D	♦ CODI	559 - 75
VVC1015,A,B,C,D	♦ CODI	560 -106
VVC1016,A,B,C,D	♦ CODI	561 - 81
VVC1017,A,B,C,D	♦ CODI	562 - 52
VVC1018,A,B,C,D	♦ CODI	563 - 20
VVC1019,A,B,C,D	♦ CODI	563 - 34
VVC1020,A,B,C,D	♦ CODI	563 - 61
VVC1021,A,B,C,D	CODI	564 -107
VVC1022,A,B,C,D	CODI	564 -108
VVC1023,A,B,C,D	CODI	564 -109
VVC1024,A,B,C,D	CODI	564 -110
VVC1025,A,B,C,D	CODI	565 - 1
VVC1026,A,B,C,D	CODI	565 - 2
VVC1027,A,B,C,D	CODI	565 - 3
VVC1028,A,B,C,D	CODI	565 - 4
VVC1029,A,B,C,D	CODI	565 - 5
VVC1030,A,B,C,D	CODI	565 - 6
VVC1031,A,B,C,D	CODI	565 - 7
VVC1032,A,B,C,D	CODI	565 - 8
VVC1041,A,B,C,D	CODI	564 - 52
VVC1042,A,B,C,D	CODI	564 - 53
VVC1043,A,B,C,D	CODI	564 - 54
VVC1044,A,B,C,D	CODI	564 - 76
VVC1045,A,B,C,D	CODI	564 - 77
VVC1046,A,B,C,D	CODI	564 - 78
VVC1047,A,B,C,D	CODI	564 - 96
VVC1048,A,B,C,D	CODI	564 - 97
VVC1049,A,B,C,D	CODI	564 - 98
VVC1050,A,B,C,D	CODI	564 -100
VVC1051,A,B,C,D	CODI	564 -101
VVC1052,A,B,C,D	CODI	564 -102
VVC1620,A,B,C,D	CODI	564 - 10
VVC1622,A,B,C,D	CODI	564 - 17
VVC1624,A,B,C,D	CODI	564 - 26
VVC1626,A,B,C,D	CODI	564 - 33
VVC1628,A,B,C,D	CODI	564 - 42
VVC1630,A,B,C,D	CODI	564 - 51
VVC1632,A,B,C,D	CODI	564 - 55
VVC1634,A,B,C,D	CODI	564 - 64
VVC1636,A,B,C,D	CODI	564 - 73
VVC1640,A,B,C,D	CODI	564 - 93
VVC1642,A,B,C,D	CODI	564 - 99
VVC1644,A,B,C,D	CODI	564 -103
VVC1646,A,B,C,D	CODI	564 -104
VVC1648,A,B,C,D	CODI	564 -105
VVC1650,A,B,C,D	CODI	564 -106
VY100X	♦ VARO	305 - 11
VY200X	♦ VARO	316 - 53
VY400X	♦ VARO	335 - 56
VYA100X	♦ VARO	279 - 20
VYA200X	♦ VARO	282 - 88
VYA400X	♦ VARO	285 - 60
VYB100X	♦ VARO	279 - 21
VYB200X	♦ VARO	282 - 89
VYB400X	♦ VARO	285 - 61
VYC100X	♦ VARO	279 - 22
VYC200X	♦ VARO	282 - 90
VYC400X	♦ VARO	285 - 62
VYD100X	♦ VARO	279 - 23
VYD200X	♦ VARO	282 - 91
VYD400X	♦ VARO	285 - 63
VYE100X	♦ VARO	279 - 24
VYE200X	♦ VARO	282 - 92
VYE400X	♦ VARO	285 - 64
VYF100X	♦ VARO	279 - 25
VYF200X	♦ VARO	282 - 93

TYPE No.	MFRS	Pg&Line
VYF400X	♦ VARO	285 - 65
VYG100X	♦ VARO	279 - 26
VYG200X	♦ VARO	282 - 94
VYG400X	♦ VARO	285 - 66
WA100	WSI	269 - 76
WA200	WSI	279 - 77
WA300	WSI	281 - 35
WA400	WSI	283 - 17
WA500	WSI	283 - 83
WA600	WSI	283 -108
WD001	WSI	249 - 33
WD002	WSI	249 - 34
WD003	WSI	249 - 35
WD004	WSI	253 - 5
WD005	WSI	253 - 6
WD006	WSI	253 - 7
WD007	WSI	256 - 27
WD008	WSI	256 - 28
WD009	WSI	256 - 29
WD010	WSI	257 - 30
WD011	WSI	257 - 31
WD012	WSI	257 - 32
WD013	WSI	258 - 26
WD014	WSI	258 - 27
WD015	WSI	258 - 28
WF5AM	WSI	496 - 17
WF5M	WSI	496 - 18
WF10AM	WSI	496 - 20
WF10M	WSI	496 - 21
WF15AM	WSI	496 - 24
WF15M	WSI	496 - 25
WF20	WSI	496 - 28
WF20A	WSI	496 - 29
WF20AM	WSI	496 - 30
WF20B	WSI	496 - 26
WF20M	WSI	496 - 31
WF30	WSI	496 - 45
WF30A	WSI	496 - 46
WF30AM	WSI	496 - 47
WF30B	WSI	496 - 42
WF30M	WSI	496 - 48
WF34E	WSI	496 - 57
WF40	WSI	496 - 63
WF40A	WSI	496 - 64
WF40AM	WSI	496 - 65
WF40B	WSI	496 - 62
WF40M	WSI	496 - 66
WF50	WSI	496 - 77
WF50A	WSI	496 - 78
WF50AM	WSI	496 - 79
WF50B	WSI	496 - 76
WF50M	WSI	496 - 80
WF100	WSI	496 - 94
WF100A	WSI	496 - 95
WF100AM	WSI	496 - 96
WF100B	WSI	496 - 92
WF100M	WSI	496 - 97
WF200	WSI	496 -109
WF200A	WSI	496 -110
WF200AM	WSI	497 - 1
WF200B	WSI	496 -108
WF200M	WSI	497 - 2
WG140	ITT	280 - 69
WG141	ITT	277 - 46
WG142	ITT	271 - 34
WR100	WSI	299 - 63
WR200	WSI	310 - 23
WR300	WSI	320 - 81
WR400	WSI	328 - 92
WS100	WSI	269 - 29
WS200	WSI	269 - 30
WS300	WSI	269 - 41
WZ522	WSI	171 - 76
WZ523	WSI	172 - 77
WZ524	WSI	174 - 2
WZ525	WSI	176 -139
WZ526	WSI	178 -176
WZ527	WSI	179 -149
WZ528	WSI	181 - 60
WZ529	WSI	183 -204
WZ531	WSI	184 -151
WZ532	WSI	187 - 43
WZ533	WSI	188 - 13
WZ534	WSI	190 - 25
WZ535	WSI	192 - 82
WZ536	WSI	194 -151
WZ537	WSI	196 - 62
WZ538	WSI	197 -102
WZ539	WSI	199 -102
WZ541	WSI	201 - 15
WZ542	WSI	202 - 9
WZ543	WSI	203 -152
WZ544	WSI	204 -155
WZ904	WSI	170 - 30
WZ905	WSI	171 - 81
WZ906	WSI	172 - 80
WZ907	WSI	174 - 9
WZ908	WSI	176 -146
WZ909	WSI	178 -179
WZ910	WSI	180 - 11
WZ911	WSI	181 - 65
WZ912	WSI	183 -207
WZ913	WSI	184 -185
WZ914	WSI	187 - 46
WZ915	WSI	188 - 62
WZ916	WSI	191 - 86
WZ917	WSI	192 -130
WZ918	WSI	194 -189
WZ919	WSI	196 - 74
WZ920	WSI	197 -148
WZ921	WSI	199 -140
WZ922	WSI	201 - 27
WZ923	WSI	202 - 55
WZ924	WSI	203 -165

TYPE No.	MFRS	Pg&Line
WZ925	WSI	205 - 9
WZ926	WSI	206 - 26
WZ927	WSI	208 -158
WZ928	WSI	210 - 88
WZ3000	WSI	176 - 3
WZ3000A	WSI	176 - 4
WZ3000B	WSI	176 - 5
WZ3001	WSI	176 - 6
WZ3001A	WSI	176 - 7
WZ3001B	WSI	176 - 8
WZ3002	WSI	176 - 9
WZ3002A	WSI	176 - 10
WZ3002B	WSI	176 - 11
WZ3003	WSI	176 - 12
WZ3003A	WSI	176 - 13
WZ3003B	WSI	176 - 14
WZ3004	WSI	176 - 15
WZ3004A	WSI	176 - 16
WZ3004B	WSI	176 - 17
WZ3005	WSI	176 - 18
WZ3005A	WSI	176 - 19
WZ3005B	WSI	176 - 20
X1H121	♦ ESMF	524 - 45
	MISI	
X6A71	ESMF	596 - 73
	MISI	
X6A72	ESMF	596 - 74
	MISI	
X6A73	ESMF	596 - 75
	MISI	
X6A74	ESMF	596 - 76
	MISI	
X6A100	♦ NPC	596 - 77
X6A101	♦ NPC	596 - 78
X6A102	♦ NPC	596 - 79
X6A103	♦ NPC	596 - 80
X6A104	♦ NPC	596 - 81
X6A105	♦ NPC	596 - 82
X6A106	♦ NPC	596 - 83
X6A107	♦ NPC	596 - 84
X6F951	♦ ESMF	280 - 32
	MISI	
X6G551	♦ ESMF	268 - 90
	MISI	
X6G751	♦ ESMF	273 - 26
	MISI	
X6G851	♦ ESMF	276 - 17
	MISI	
X6P1	ESMF	511 -110
	MISI	
X6P3	ESMF	512 - 1
	MISI	
X6P10	ESMF	514 - 78
	MISI	
X6P11	ESMF	514 - 79
	MISI	
X6P12	ESMF	514 - 80
	MISI	
X10-3	PPC	393 - 63
X10-4	PPC	396 - 45
X10-5	PPC	398 - 97
X10-6	PPC	400 - 66
X10-7	PPC	402 - 2
X10-8	PPC	403 - 27
X10-9	PPC	404 - 48
X25-3	PPC	393 - 70
X25-4	PPC	396 - 52
X25-5	PPC	399 - 1
X25-6	PPC	400 - 74
X25-7	PPC	402 - 12
X25-8	PPC	403 - 37
X25-9	PPC	404 - 55
X50-3	PPC	393 - 86
X50-4	PPC	396 - 69
X50-5	PPC	399 - 23
X50-6	PPC	400 - 91
X50-7	PPC	402 - 23
X50-8	PPC	403 - 53
X50-9	PPC	404 - 61
X61P2	ESMF	512 - 2
	MISI	
XD500,1,2	♦ TII	527 - 52
	TIIB	
XF10-3	PPC	289 - 43
XF10-4	PPC	289 - 64
XF10-5	PPC	289 - 96
XF10-6	PPC	290 - 11
XF10-7	PPC	290 - 35
XF10-8	PPC	290 - 61
XF10-9	PPC	290 - 73
XF25-3	PPC	289 - 44
XF25-4	PPC	289 - 65
XF25-5	PPC	289 - 97
XF25-6	PPC	290 - 12
XF25-7	PPC	290 - 36
XF25-8	PPC	290 - 62
XF25-9	PPC	290 - 74
XF50-3	PPC	289 - 45
XF50-4	PPC	289 - 66
XF50-5	PPC	289 -107
XF50-6	PPC	290 - 13
XF50-7	PPC	290 - 37
XF50-8	PPC	290 - 63
XF50-9	PPC	290 - 75
XM541	♦ ESMF	267 - 11
	MISI	
XM542	♦ ESMF	269 -106
	MISI	
XM543	♦ ESMF	267 - 12
	MISI	
XM544	♦ ESMF	269 -107
	MISI	
XMP1	ESMF	512 - 3
	MISI	

TYPE No.	MFRS	Pg&Line
XMP2	ESMF	512 - 4
	MISI	
XMP3	ESMF	512 - 5
	MISI	
XS10	SCN	300 - 15
XS12	SCN	377 - 72
XS16	SCN	329 - 75
XS16A	SCN	329 - 76
XS17	SCN	310 -101
XS17A	SCN	310 -102
XS18	SCN	339 -109
XS22	SCN	293 - 67
XS23	SCN	346 -107
XS23A	SCN	346 -108
XS31	SCN	321 - 24
XS40A	SCN	294 - 10
XTP10	ESMF	514 - 81
	MISI	
XTP11	ESMF	514 - 82
	MISI	
XTP12	ESMF	514 - 83
	MISI	
XX8	PPC	403 - 26
XX10	PPC	405 - 25
XX12	PPC	406 - 91
XX15	PPC	408 - 2
XX20	PPC	409 - 88
XX25	PPC	410 -108
XX30	PPC	411 -108
XX40	PPC	412 - 66
XXF8	PPC	290 - 64
XXF10	PPC	290 - 96
XXF12	PPC	291 - 4
XXF15	PPC	291 - 23
XXF20	PPC	291 - 51
XXF25	PPC	291 - 62
XXF30	PPC	291 - 75
XXF40	PPC	291 - 90
Y23	TIIB	377 - 84
YSD211P4K38	♦ ASEA	338 - 9
YSD211P6K38	♦ ASEA	354 - 65
YSD211P8K38	♦ ASEA	366 - 63
YSD211P10K38	♦ ASEA	375 -105
YSD211P12K38	♦ ASEA	380 -104
YSD211P14K38	♦ ASEA	383 - 66
YSD212P4K38	♦ ASEA	337 - 84
YSD212P6K38	♦ ASEA	354 - 33
YSD212P8K38	♦ ASEA	366 - 36
YSD212P10K38	♦ ASEA	375 - 78
YSD212P12K38	♦ ASEA	380 - 75
YSD212P14K38	♦ ASEA	383 - 35
YSD901P16K29	♦ ASEA	387 - 73
YSD901P18K29	♦ ASEA	389 - 5
YSD901P20K29	♦ ASEA	390 -107
YSD902P22K38	♦ ASEA	391 - 49
YSD902P24K38	♦ ASEA	392 - 10
YSD902P26K38	♦ ASEA	393 - 6
YSD902P28K38	♦ ASEA	393 - 53
YSD903P30K50	♦ ASEA	395 - 2
YSD903P32K50	♦ ASEA	395 - 28
YSD903P34K50	♦ ASEA	395 - 45
YSD903P36K50	♦ ASEA	396 - 21
YST301QP2K3	♦ ASEA	440 - 17
YST301QP4K3	♦ ASEA	456 - 51
YST301QP6K3	♦ ASEA	470 - 33
YST301QP8K3	♦ ASEA	479 - 11
YST301QP10K3	♦ ASEA	485 - 53
YST302QP2K3	♦ ASEA	439 -109
YST302QP4K3	♦ ASEA	456 - 32
YST302QP6K3	♦ ASEA	470 - 11
YST302QP8K3	♦ ASEA	478 -104
YST302QP10K3	♦ ASEA	485 - 37
YST302QP12K3	♦ ASEA	490 - 9
YST302QP14K3	♦ ASEA	492 - 92
YST801SP8K2	♦ ASEA	479 - 41
YST801SP10K2	♦ ASEA	485 - 78
YST801SP12K2	♦ ASEA	490 - 46
YST801SP14K2	♦ ASEA	492 -108
YST801SP16K2	♦ ASEA	494 - 31
YST801SP18K2	♦ ASEA	494 - 84
ZOA2.4	♦ SLCB	165 -181
ZOA2 7	♦ SLCB	166 - 55
ZOA3.0	♦ SLCB	166 -134
ZOA3.3	♦ SLCB	167 - 36
ZOA3.6	♦ SLCB	167 -183
ZOA3 9	♦ SLCB	168 -139
ZOA4 3	♦ SLCB	169 -135
ZOA4 7	♦ SLCB	170 -139
ZOA5 1	♦ SLCB	171 -181
ZOA5 6	♦ SLCB	173 - 48
ZOA6.2	♦ SLCB	175 - 25
ZOA6 8	♦ SLCB	177 -119
ZOA7.5	♦ SLCB	179 -167
ZOA8 2	♦ SLCB	182 - 35
ZOA9.1	♦ SLCB	185 -146
ZOA10	♦ SLCB	188 - 34
ZOA11	♦ SLCB	190 - 41
ZOA12	♦ SLCB	192 -105
ZOA13	♦ SLCB	194 -166
ZOA15	♦ SLCB	197 -124
ZOA16	♦ SLCB	199 -117
ZOA18	♦ SLCB	202 - 30
ZOA20	♦ SLCB	204 -171
ZOA22	♦ SLCB	206 -143
ZOA24	♦ SLCB	208 -135
ZOA27	♦ SLCB	211 - 27
ZOA30	♦ SLCB	213 - 36
ZOA33	♦ SLCB	214 -182
ZOB2.4	♦ SLCB	165 -182
ZOB2.7	♦ SLCB	166 - 56
ZOB3 0	♦ SLCB	166 -135
ZOB3 3	♦ SLCB	167 - 37
ZOB3 6	♦ SLCB	167 -184
ZOB3 9	♦ SLCB	168 -140

Δ-Registered with JEDEC by this manufacturer

♦-Copy of mfr's data sheet may be ordered from D.A.T.A.

1. TYPE No. CROSS INDEX

IN TYPE NUMBER SEQUENCE

TYPE No.	MFRS	Pg&Line	TYPE No	MFRS	Pg&Line	TYPE No.	MFRS	Pg&Line	TYPE No.	MFRS	Pg&Line	TYPE No.	MFRS	Pg&Line
Z0B4 3	♦SLCB	169-136	Z1B3 9	♦SLCB	168- 80	Z2A82F	ITTB	182-116	Z3B6.2	♦SLCB	175- 92	Z4A4 7	♦SLCB	170-177
Z0B4 7	♦SLCB	170-140	Z1B4 3	♦SLCB	169- 79	Z2A91F	ITTB	186- 47	Z3B6.8	♦SLCB	178- 63	Z4A5.1	♦SLCB	172- 19
Z0B5 1	♦SLCB	171-182	Z1B4 7	♦SLCB	170- 72	Z2A100F	ITTB	188-130	Z3B7 5	♦SLCB	180-105	Z4A5.6	♦SLCB	173- 91
Z0B5 6	♦SLCB	173- 49	Z1B5.1	♦SLCB	171-118	Z2A110F	ITTB	190-118	Z3B8.2	♦SLCB	182-158	Z4A6.2	♦SLCB	175- 66
Z0B6 2	♦SLCB	175- 26	Z1B5 6	♦SLCB	172-158	Z2A120F	ITTB	193- 20	Z3B9.1	♦SLCB	186- 87	Z4A6.8	♦SLCB	178- 23
Z0B6 8	♦SLCB	177-120	Z1B6.2	♦SLCB	174-136	Z2A130F	ITTB	195- 57	Z3B10	♦SLCB	188-175	Z4A7.5	♦SLCB	180- 67
Z0B7 5	♦SLCB	179-168	Z1B6 8	♦SLCB	177- 17	Z2A150F	ITTB	198- 26	Z3B11	♦SLCB	190-158	Z4A8 2	♦SLCB	182-117
Z0B8 2	♦SLCB	182- 36	Z1B7 5	♦SLCB	179- 70	Z2B3 3	♦SLCB	167- 76	Z3B12	♦SLCB	193- 68	Z4A9.1	♦SLCB	186- 48
Z0B9 1	♦SLCB	185-147	Z1B8 2	♦SLCB	181-124	Z2B3 6	♦SLCB	168- 29	Z3B13	♦SLCB	195- 97	Z4A10	♦SLCB	188-131
Z0B10	♦SLCB	188- 35	Z1B9 1	♦SLCB	185- 50	Z2B3 9	♦SLCB	168-187	Z3B15	♦SLCB	198- 70	Z4A11	♦SLCB	190-119
Z0B11	♦SLCB	190- 42	Z1B10	♦SLCB	187-116	Z2B4 3	♦SLCB	169-183	Z3B16	♦SLCB	200- 46	Z4A12	♦SLCB	193- 21
Z0B12	♦SLCB	192-106	Z1B11	♦SLCB	189-157	Z2B4 7	♦SLCB	170-194	Z3B18	♦SLCB	202-161	Z4A13	♦SLCB	195- 58
Z0B13	♦SLCB	194-167	Z1B12	♦SLCB	191-202	Z2B5 1	♦SLCB	172- 34	Z3B20	♦SLCB	205-101	Z4A15	♦SLCB	198- 27
Z0B15	♦SLCB	197-125	Z1B13	♦SLCB	194- 85	Z2B5 6	♦SLCB	173-111	Z3B22	♦SLCB	207- 86	Z4A16	♦SLCB	200- 6
Z0B16	♦SLCB	199-118	Z1B15	♦SLCB	197- 32	Z2B6.2	♦SLCB	175- 88	Z3B24	♦SLCB	209- 64	Z4A18	♦SLCB	202-118
Z0B18	♦SLCB	202- 31	Z1B16	♦SLCB	199- 37	Z2B6 8	♦SLCB	178- 59	Z3B27	♦SLCB	211-152	Z4A20	♦SLCB	205- 59
Z0B20	♦SLCB	204-172	Z1B18	♦SLCB	201-115	Z2B7 5	♦SLCB	180-101	Z3B30	♦SLCB	213-147	Z4A22	♦SLCB	207- 42
Z0B22	♦SLCB	206-144	Z1B20	♦SLCB	204- 91	Z2B8 2	♦SLCB	182-154	Z3B33	♦SLCB	215-116	Z4A24	♦SLCB	209- 25
Z0B24	♦SLCB	208-136	Z1B22	♦SLCB	206- 57	Z2B9 1	♦SLCB	186- 83	Z3B33CF	ITTB	167- 73	Z4A27	♦SLCB	211-107
Z0B27	♦SLCB	211- 28	Z1B24	♦SLCB	208- 57	Z2B10	♦SLCB	188-171	Z3B36CF	ITTB	168- 34	Z4A30	♦SLCB	213-105
Z0B30	♦SLCB	213- 37	Z1B27	♦SLCB	210-122	Z2B11	♦SLCB	190-154	Z3B39CF	ITTB	168-192	Z4A33	♦SLCB	215- 72
Z0B33	♦SLCB	215- 1	Z1B30	♦SLCB	212-159	Z2B12	♦SLCB	193- 64	Z3B43CF	ITTB	169-188	Z4B3.0	♦SLCB	166-142
Z0C2 4	♦SLCB	165-183	Z1B33	♦SLCB	214-109	Z2B13	♦SLCB	195- 93	Z3B47CF	ITTB	171- 4	Z4B3.3	♦SLCB	167- 62
Z0C2 7	♦SLCB	166- 57	Z1C2 4	♦SLCB	165-158	Z2B15	♦SLCB	198- 66	Z3B51CF	ITTB	172- 39	Z4B3.6	♦SLCB	168- 22
Z0C3 0	♦SLCB	166-136	Z1C2 7	♦SLCB	166- 22	Z2B16	♦SLCB	200- 42	Z3B56CF	ITTB	173-116	Z4B3.9	♦SLCB	168-173
Z0C3 3	♦SLCB	167- 38	Z1C3.0	♦SLCB	166- 93	Z2B18	♦SLCB	202-157	Z3B62CF	ITTB	175- 93	Z4B4.3	♦SLCB	169-171
Z0C3 6	♦SLCB	167-185	Z1C3 3	♦SLCB	166-171	Z2B20	♦SLCB	205- 97	Z3B68CF	ITTB	178- 64	Z4B4 7	♦SLCB	170-178
Z0C3 9	♦SLCB	168-141	Z1C3 6	♦SLCB	167-127	Z2B22	♦SLCB	207- 82	Z3B75CF	ITTB	180-106	Z4B5 1	♦SLCB	172- 20
Z0C4 3	♦SLCB	169-137	Z1C3 9	♦SLCB	168- 81	Z2B24	♦SLCB	209- 60	Z3B82CF	ITTB	182-159	Z4B5.6	♦SLCB	173- 92
Z0C4 7	♦SLCB	170-141	Z1C4 3	♦SLCB	169- 80	Z2B27	♦SLCB	211-148	Z3B91CF	ITTB	186- 88	Z4B6 2	♦SLCB	175- 67
Z0C5 1	♦SLCB	171-183	Z1C4 7	♦SLCB	170- 73	Z2B30	♦SLCB	213-143	Z3B100CF	ITTB	188-176	Z4B6 8	♦SLCB	178- 24
Z0C5 6	♦SLCB	173- 50	Z1C5 1	♦SLCB	171-119	Z2B33	♦SLCB	215-112	Z3B110CF	ITTB	190-159	Z4B7 5	♦SLCB	180- 68
Z0C6 2	♦SLCB	175- 27	Z1C5 6	♦SLCB	172-159	Z2C3 3	♦SLCB	167- 69	Z3B120CF	ITTB	193- 69	Z4B8.2	♦SLCB	182-118
Z0C6 8	♦SLCB	177-121	Z1C6 2	♦SLCB	174-137	Z2C3 6	♦SLCB	168- 30	Z3B130CF	ITTB	195- 98	Z4B9 1	♦SLCB	186- 49
Z0C7 5	♦SLCB	179-169	Z1C6 8	♦SLCB	177- 18	Z2C3 9	♦SLCB	168-188	Z3B150CF	ITTB	198- 71	Z4B10	♦SLCB	188-132
Z0C8 2	♦SLCB	182- 37	Z1C7 5	♦SLCB	179- 71	Z2C4 3	♦SLCB	169-184	Z3B160CF	ITTB	200- 47	Z4B11	♦SLCB	190-120
Z0C9 1	♦SLCB	185-148	Z1C8 2	♦SLCB	181-125	Z2C4 7	♦SLCB	170-195	Z3B180CF	ITTB	202-162	Z4B12	♦SLCB	193- 22
Z0C10	♦SLCB	188- 36	Z1C9 1	♦SLCB	185- 51	Z2C5 1	♦SLCB	172- 35	Z3B200CF	ITTB	205-102	Z4B13	♦SLCB	195- 59
Z0C11	♦SLCB	190- 43	Z1C10	♦SLCB	187-117	Z2C5 6	♦SLCB	173-112	Z3B220CF	ITTB	207- 87	Z4B15	♦SLCB	198- 28
Z0C12	♦SLCB	192-107	Z1C11	♦SLCB	189-158	Z2C6 2	♦SLCB	175- 89	Z3B240CF	ITTB	209- 65	Z4B16	♦SLCB	200- 7
Z0C13	♦SLCB	194-168	Z1C12	♦SLCB	191-203	Z2C6 8	♦SLCB	178- 60	Z3B270CF	ITTB	211-153	Z4B18	♦SLCB	202-119
Z0C15	♦SLCB	197-126	Z1C13	♦SLCB	194- 86	Z2C7 5	♦SLCB	180-102	Z3B300CF	ITTB	213-148	Z4B20	♦SLCB	205- 60
Z0C16	♦SLCB	199-119	Z1C15	♦SLCB	197- 33	Z2C8 2	♦SLCB	182-155	Z3B330CF	ITTB	215-117	Z4B22	♦SLCB	207- 43
Z0C18	♦SLCB	202- 32	Z1C16	♦SLCB	199- 38	Z2C9 1	♦SLCB	186- 84	Z3B360CF	ITTB	217- 17	Z4B24	♦SLCB	209- 26
Z0C20	♦SLCB	204-173	Z1C18	♦SLCB	201-116	Z2C10	♦SLCB	188-172	Z3B390CF	ITTB	218- 98	Z4B27	♦SLCB	211-108
Z0C22	♦SLCB	206-145	Z1C20	♦SLCB	204- 92	Z2C11	♦SLCB	190-155	Z3B430CF	ITTB	219-175	Z4B30	♦SLCB	213-106
Z0C24	♦SLCB	208-137	Z1C22	♦SLCB	206- 58	Z2C12	♦SLCB	193- 65	Z3B470CF	ITTB	221-120	Z4B33	♦SLCB	215- 73
Z0C27	♦SLCB	211- 29	Z1C24	♦SLCB	208- 58	Z2C13	♦SLCB	195- 94	Z3B510CF	ITTB	223- 61	Z4C3 0	♦SLCB	166-143
Z0C30	♦SLCB	213- 38	Z1C27	♦SLCB	210-123	Z2C15	♦SLCB	198- 67	Z3B560CF	ITTB	224-148	Z4C3.3	♦SLCB	167- 63
Z0C33	♦SLCB	215- 2	Z1C30	♦SLCB	212-160	Z2C16	♦SLCB	200- 43	Z3B620CF	ITTB	226- 92	Z4C3.6	♦SLCB	168- 23
Z0D2 4	♦SLCB	165-184	Z1C33	♦SLCB	214-110	Z2C18	♦SLCB	202-158	Z3B680CF	ITTB	227-153	Z4C3 9	♦SLCB	168-174
Z0D2 7	♦SLCB	166- 58	Z1D2 4	♦SLCB	165-159	Z2C20	♦SLCB	205- 98	Z3B750CF	ITTB	229- 66	Z4C4 3	♦SLCB	169-172
Z0D3 0	♦SLCB	166-137	Z1D2 7	♦SLCB	166- 23	Z2C22	♦SLCB	207- 83	Z3B820CF	ITTB	230-144	Z4C4 7	♦SLCB	170-179
Z0D3.3	♦SLCB	167- 39	Z1D3 0	♦SLCB	166- 94	Z2C24	♦SLCB	209- 61	Z3B910CF	ITTB	232- 78	Z4C5 1	♦SLCB	172- 21
Z0D3 6	♦SLCB	167-186	Z1D3 3	♦SLCB	166-172	Z2C27	♦SLCB	211-149	Z3B1000CF	ITTB	233-127	Z4C5 6	♦SLCB	173- 93
Z0D3 9	♦SLCB	168-142	Z1D3 6	♦SLCB	167-128	Z2C30	♦SLCB	213-144	Z3C3 3	♦SLCB	167- 74	Z4C6 2	♦SLCB	175- 68
Z0D4 3	♦SLCB	169-138	Z1D3.9	♦SLCB	168- 82	Z2C33	♦SLCB	215-113	Z3C3.6	♦SLCB	168- 35	Z4C6.8	♦SLCB	178- 25
Z0D4 7	SLCB	170-137	Z1D4 3	♦SLCB	169- 81	Z2D3 3	♦SLCB	167- 70	Z3C3.9	♦SLCB	168-193	Z4C7 5	♦SLCB	180- 69
Z0D5 1	♦SLCB	171-184	Z1D4 7	SLCB	170- 70	Z2D3 6	♦SLCB	168- 31	Z3C4.3	♦SLCB	169-189	Z4C8 2	♦SLCB	182-119
Z0D5 6	♦SLCB	173- 51	Z1D5 1	♦SLCB	171-120	Z2D3.9	♦SLCB	168-189	Z3C4.7	♦SLCB	171- 5	Z4C9.1	♦SLCB	186- 50
Z0D6 2	SLCB	175- 23	Z1D5 6	♦SLCB	172-160	Z2D4.3	♦SLCB	169-185	Z3C5.1	♦SLCB	172- 40	Z4C10	♦SLCB	188-133
Z0D6 8	♦SLCB	177-122	Z1D6 2	SLCB	174-134	Z2D4.7	SLCB	171- 1	Z3C5 6	♦SLCB	173-117	Z4C11	♦SLCB	190-121
Z0D7 5	♦SLCB	179-170	Z1D6 8	♦SLCB	177- 19	Z2D5 1	♦SLCB	172- 36	Z3C6 2	♦SLCB	175- 94	Z4C12	♦SLCB	193- 23
Z0D8 2	SLCB	182- 33	Z1D7 5	♦SLCB	179- 72	Z2D5 6	♦SLCB	173-113	Z3C6 8	♦SLCB	178- 65	Z4C13	♦SLCB	195- 60
Z0D9 1	♦SLCB	185-149	Z1D8 2	SLCB	181-122	Z2D6 2	SLCB	175- 90	Z3C7 5	♦SLCB	180-107	Z4C15	♦SLCB	198- 29
Z0D10	♦SLCB	188- 37	Z1D9 1	♦SLCB	185- 52	Z2D6 8	♦SLCB	178- 61	Z3C8.2	♦SLCB	182-160	Z4C16	♦SLCB	200- 8
Z0D11	SLCB	190- 39	Z1D10	♦SLCB	187-118	Z2D7 5	♦SLCB	180-103	Z3C9 1	♦SLCB	186- 89	Z4C18	♦SLCB	202-120
Z0D12	♦SLCB	192-108	Z1D11	SLCB	189-155	Z2D8 2	SLCB	182-156	Z3C10	♦SLCB	188-177	Z4C20	♦SLCB	205- 61
Z0D13	♦SLCB	194-169	Z1D12	♦SLCB	191-204	Z2D9.1	♦SLCB	186- 85	Z3C11	♦SLCB	190-160	Z4C22	♦SLCB	207- 44
Z0D15	SLCB	197-122	Z1D13	♦SLCB	194- 87	Z2D10	♦SLCB	188-173	Z3C12	♦SLCB	193- 70	Z4C24	♦SLCB	209- 27
Z0D16	♦SLCB	199-120	Z1D15	SLCB	197- 30	Z2D11	SLCB	190-156	Z3C13	♦SLCB	195- 99	Z4C27	♦SLCB	211-109
Z0D18	♦SLCB	202- 33	Z1D16	♦SLCB	199- 39	Z2D12	♦SLCB	193- 66	Z3C15	♦SLCB	198- 72	Z4C30	♦SLCB	213-107
Z0D20	SLCB	204-169	Z1D18	♦SLCB	201-117	Z2D13	♦SLCB	195- 95	Z3C16	♦SLCB	200- 48	Z4C33	♦SLCB	215- 74
Z0D22	♦SLCB	206-146	Z1D20	SLCB	204- 89	Z2D15	SLCB	198- 68	Z3C18	♦SLCB	202-163	Z4D3 0	♦SLCB	166-144
Z0D24	♦SLCB	208-138	Z1D22	♦SLCB	206- 59	Z2D16	♦SLCB	200- 44	Z3C20	♦SLCB	205-103	Z4D3 3	♦SLCB	167- 64
Z0D27	SLCB	211- 25	Z1D24	♦SLCB	208- 59	Z2D18	♦SLCB	202-159	Z3C22	♦SLCB	207- 88	Z4D3 6	♦SLCB	168- 24
Z0D30	♦SLCB	213- 39	Z1D27	♦SLCB	210-124	Z2D20	SLCB	205- 99	Z3C24	♦SLCB	209- 66	Z4D3.9	♦SLCB	168-175
Z0D33	♦SLCB	215- 3	Z1D30	♦SLCB	212-161	Z2D22	♦SLCB	207- 84	Z3C27	♦SLCB	211-154	Z4D4 3	♦SLCB	169-173
Z0 5	LTTF	165- 5	Z1D33	♦SLCB	214-111	Z2D24	♦SLCB	209- 62	Z3C30	♦SLCB	213-149	Z4D4.7	♦SLCB	170-180
Z0 6	LTTF	165- 22	Z2A3 3	♦SLCB	167- 68	Z2D27	SLCB	211-150	Z3C33	♦SLCB	215-118	Z4D5 1	♦SLCB	172- 22
Z0 7	LTTF	165- 33	Z2A3 6	♦SLCB	168- 28	Z2D30	♦SLCB	213-145	Z3D3.3	♦SLCB	167- 75	Z4D5 6	♦SLCB	173- 94
Z1A2 4	♦SLCB	165-156	Z2A3 9	♦SLCB	168-186	Z2D33	♦SLCB	215-114	Z3D3 6	♦SLCB	168- 36	Z4D6.2	♦SLCB	175- 69
Z1A2 7	♦SLCB	166- 20	Z2A4 3	♦SLCB	169-182	Z3A3 3	♦SLCB	167- 71	Z3D3 9	♦SLCB	168-194	Z4D6 8	♦SLCB	178- 26
Z1A3 0	♦SLCB	166- 91	Z2A4 7	♦SLCB	170-193	Z3A3 6	♦SLCB	168- 32	Z3D4 3	♦SLCB	169-190	Z4D7 5	♦SLCB	180- 70
Z1A3 3	♦SLCB	166-169	Z2A5 1	♦SLCB	172- 33	Z3A3 9	♦SLCB	168-190	Z3D4 7	SLCB	171- 6	Z4D8.2	♦SLCB	182-120
Z1A3 6	♦SLCB	167-125	Z2A5 6	♦SLCB	173-110	Z3A4 3	♦SLCB	169-186	Z3D5 1	♦SLCB	172- 41	Z4D9 1	♦SLCB	186- 51
Z1A3 9	♦SLCB	168- 79	Z2A6 2	♦SLCB	175- 87	Z3A4.7	♦SLCB	171- 2	Z3D5 6	♦SLCB	173-118	Z4D10	♦SLCB	188-134
Z1A4 3	♦SLCB	169- 78	Z2A6 8	♦SLCB	178- 58	Z3A5.1	♦SLCB	172- 37	Z3D6 2	SLCB	175- 95	Z4D11	♦SLCB	190-122
Z1A4 7	♦SLCB	170- 71	Z2A7 5	♦SLCB	180-100	Z3A5.6	♦SLCB	173-114	Z3D6 8	♦SLCB	178- 66	Z4D12	♦SLCB	193- 24
Z1A5 1	♦SLCB	171-117	Z2A8 2	♦SLCB	182-153	Z3A6 2	♦SLCB	175- 91	Z3D7 5	♦SLCB	180-108	Z4D13	♦SLCB	195- 61
Z1A5 6	♦SLCB	172-157	Z2A9 1	♦SLCB	186- 82	Z3A6 8	♦SLCB	178- 62	Z3D8 2	SLCB	182-161	Z4D15	♦SLCB	198- 30
Z1A6 2	♦SLCB	174-135	Z2A10	♦SLCB	188-170	Z3A7 5	♦SLCB	180-104	Z3D9 1	♦SLCB	186- 90	Z4D16	♦SLCB	200- 9
Z1A6 8	♦SLCB	177- 16	Z2A11	♦SLCB	190-153	Z3A8 2	♦SLCB	182-157	Z3D10	♦SLCB	188-178	Z4D18	♦SLCB	202-121
Z1A7 5	♦SLCB	179- 69	Z2A12	♦SLCB	193- 63	Z3A9 1	♦SLCB	186- 86	Z3D11	SLCB	190-161	Z4D20	♦SLCB	205- 62
Z1A8 2	♦SLCB	181-123	Z2A13	♦SLCB	195- 92	Z3A10	♦SLCB	188-174	Z3D12	♦SLCB	193- 71	Z4D22	♦SLCB	207- 45
Z1A9 1	♦SLCB	185- 49	Z2A15	♦SLCB	198- 65	Z3A11	♦SLCB	190-157	Z3D13	♦SLCB	195-100	Z4D24	♦SLCB	209- 28
Z1A10	♦SLCB	187-115	Z2A16	♦SLCB	200- 41	Z3A12	♦SLCB	193- 67	Z3D15	SLCB	198- 73	Z4D27	♦SLCB	211-110
Z1A11	♦SLCB	189-156	Z2A18	♦SLCB	202-156	Z3A13	♦SLCB	195- 96	Z3D16	♦SLCB	200- 49	Z4D30	♦SLCB	213-108
Z1A12	♦SLCB	191-201	Z2A20	♦SLCB	205- 96	Z3A15	♦SLCB	198- 69	Z3D18	♦SLCB	202-164	Z4D33	♦SLCB	215- 75
Z1A13	♦SLCB	194- 84	Z2A22	♦SLCB	207- 81	Z3A16	♦SLCB	200- 45	Z3D20	SLCB	205-104	Z4X5.1B,A	GESY	172- 23
Z1A15	♦SLCB	197- 31	Z2A24	♦SLCB	209- 59	Z3A18	♦SLCB	202-160	Z3D22	♦SLCB	207- 89	Z4X14B,A	GESY	196- 94
Z1A16	♦SLCB	199- 36	Z2A27	♦SLCB	211-147	Z3A20	♦SLCB	205-100	Z3D24	♦SLCB	209- 67	Z4XL6.2,B	GESY	175- 70
Z1A18	♦SLCB	201-114	Z2A30	♦SLCB	213-142	Z3A22	♦SLCB	207- 85	Z3D27	SLCB	211-155	Z4XL7.5,B	GESY	180- 71
Z1A20	♦SLCB	204- 90	Z2A33	♦SLCB	215-111	Z3A24	♦SLCB	209- 63	Z3D30	♦SLCB	213-150	Z4XL9 1,B	GESY	186- 52
Z1A22	♦SLCB	206- 56	Z2A33F	ITTB	167- 60	Z3A27	♦SLCB	211-151	Z3D33	♦SLCB	215-119	Z4XL12,B	GESY	193- 25
Z1A24	♦SLCB	208- 56	Z2A36F	ITTB	168- 20	Z3A30	♦SLCB	213-146	Z3.3	LTTF	166-154	Z4XL14,B	GESY	196- 95
Z1A27	♦SLCB	210-121	Z2A39F	ITTB	168-170	Z3A33	♦SLCB	215-115	Z3.6	LTTF	167-111	Z4XL16,B	GESY	200- 10
Z1A30	♦SLCB	212-158	Z2A43F	ITTB	169-169	Z3B3.3	♦SLCB	167- 72	Z3.9△	PWC	168-171	Z4XL18,B	GESY	202-122
Z1A33	♦SLCB	214-108	Z2A47F	ITTB	170-176	Z3B3 6	♦SLCB	168- 33	Z3 9⊠	LTTF	168- 62	Z4XL20,B	GESY	205- 63
Z1B2 4	♦SLCB	165-157	Z2A51F	ITTB	172- 18	Z3B3.9	♦SLCB	168-191	Z4A3 0	♦SLCB	166-141	Z4XL22,B	GESY	207- 46
Z1B2 7	♦SLCB	166- 21	Z2A56F	ITTB	173- 90	Z3B4.3	♦SLCB	169-187	Z4A3 3	♦SLCB	167- 61	Z4.3△	PWC	169-174
Z1B3 0	♦SLCB	166- 92	Z2A62F	ITTB	175- 65	Z3B4 7	♦SLCB	171- 3	Z4A3.6	♦SLCB	168- 21	Z4.3⊠	LTTF	169- 57
Z1B3 3	♦SLCB	166-170	Z2A68F	ITTB	178- 22	Z3B5.1	♦SLCB	172- 38	Z4A3 9	♦SLCB	168-172	Z4 7△	PWC	170-181
Z1B3 6	♦SLCB	167-126	Z2A75F	ITTB	180- 66	Z3B5.6	♦SLCB	173-115	Z4A4.3	♦SLCB	169-170	Z4 7⊠	LTTF	170- 46

△-Registered with JEDEC by this manufacturer

♦-Copy of mfr's data sheet may be ordered from D.A.T.A.

1. TYPE No. CROSS INDEX

IN TYPE NUMBER SEQUENCE

TYPE No.	MFRS	Pg&Line	TYPE No.	MFRS	Pg&Line	TYPE No.	MFRS	Pg&Line	TYPE No.	MFRS	Pg&Line	TYPE No.	MFRS	Pg&Line
Z5A3.0	♦SLCB	166-123	Z5D620CF	ITTB	226-156	Z160C	PWC	240-130	ZAC75,A,B	SCN	229- 90	ZC018	LUCB	202- 37
Z5A3 3	♦SLCB	167- 20	Z5D680CF	ITTB	228- 43	Z175,A,B,D	PWC	241-125	ZAC82,A,B	SCN	230-165	ZC18	♦SCN	203- 19
Z5A3 6	♦SLCB	167-170	Z5D750CF	ITTB	229-143	Z175C	PWC	241-126	ZAC91,A,B	SCN	232- 98	ZC19	♦SCN	204- 23
Z5A3 9	♦SLCB	168-122	Z5D820CF	ITTB	231- 32	Z180,A,B,D	PWC	242- 70	ZAC100,A,B	SCN	233-151	ZC020	LUCB	204-177
Z5A4 3	♦SLCB	169-122	Z5D910CF	ITTB	232-140	Z180C	PWC	242- 71	ZAC110,A,B	SCN	235-106	ZC20	♦SCN	205-156
Z5A4 7	♦SLCB	170-121	Z5D1000CF	ITTB	234- 38	Z200,A,B,D	PWC	243-110	ZAC120,A,B	SCN	236-137	ZC022	LUCB	206-150
Z5A5 1	♦SLCB	171-167	Z5 1△	PWC	172- 24	Z200C	PWC	243-111	ZAC130,A,B	SCN	237-167	ZC22	♦SCN	207-142
Z5A5 6	♦SLCB	173- 9	Z5 1Ø	LTTF	171- 92	Z220,A,B,D	PWC	244- 43	ZAC150,A,B	SCN	239-150	ZC024	LUCB	208-142
Z5A6 2	♦SLCB	175- 5	Z5 6Ø	LTTF	172-103	Z220C	PWC	244- 44	ZAC160,A,B	SCN	240-165	ZC24	♦SCN	209-117
Z5A6 8	♦SLCB	177-100	Z5.6,A,B,D	PWC	173- 95	Z1140	♦SLCB	172-136	ZAC180,A,B	SCN	242-111	ZC25	♦SCN	210- 69
Z5A7 5	♦SLCB	179-150	Z5.6C	PWC	173- 96	Z1145	♦SLCB	172-137	ZAC200,A,B	SCN	243-149	ZC027	LUCB	211- 33
Z5A8 2	♦SLCB	182- 15	Z6.2Ø	LTTF	174- 72	Z1150	♦SLCB	172-138	ZAR110	FERB	371- 97	ZC27	♦SCN	212- 13
Z5A9 1	♦SLCB	185-129	Z6 2,A,B,D	PWC	175- 71	Z1155	♦SLCB	172-139	ZAR210	FERB	373- 51	ZC29	♦FERB	523- 57
Z5A10	♦SLCB	188- 14	Z6 2C	PWC	175- 72	Z1160	♦SLCB	172-140	ZAR610	♦FERB	371- 98	ZC030	LUCB	213- 43
Z5A11	♦SLCB	190- 26	Z6.8Ø	LTTF	176-198	Z1165	♦SLCB	172-141	ZAR710	♦FERB	371- 99	ZC30△	♦FERB	521- 72
Z5A12	♦SLCB	192- 83	Z6 8,A,B,D	PWC	178- 27	Z1170	♦SLCB	172-142	ZB6.8#	♦SCN	178- 30	ZC30#	♦SCN	214- 17
Z5A13	♦SLCB	194-152	Z6 8C	PWC	178- 28	Z1240	♦SLCB	172-143	ZB7.5#	♦SCN	180- 75	ZC31	♦FERB	530- 36
Z5A15	♦SLCB	197-103	Z7 5Ø	LTTF	179- 36	Z1245	♦SLCB	172-144	ZB8 2#	♦SCN	182-124	ZC32	♦FERB	532-101
Z5A16	♦SLCB	199-103	Z7 5,A,B,D	PWC	180- 72	Z1250	♦SLCB	172-145	ZB9 1#	♦SCN	186- 56	ZC033	LUCB	215- 7
Z5A18	♦SLCB	202- 10	Z7 5C	PWC	180- 73	Z1255	♦SLCB	172-146	ZB10#	♦SCN	188-138	ZC33	♦SCN	215-174
Z5A20	♦SLCB	204-156	Z8 2Ø	LTTF	181- 86	Z1260	♦SLCB	172-147	ZB11#	♦SCN	190-126	ZC36	♦SCN	217- 67
Z5A22	♦SLCB	206-124	Z8 2,A,B,D	PWC	182-121	Z1265	♦SLCB	172-148	ZB12#	♦SCN	193- 29	ZC39	♦SCN	218-136
Z5A24	♦SLCB	208-120	Z8 2C	PWC	182-122	Z1270	♦SLCB	172-149	ZB13#	♦SCN	195- 65	ZC43	♦SCN	220- 28
Z5B3 0	♦SLCB	166-124	Z9 1Ø	LTTF	184-216	Z1540	♦SLCB	172-150	ZB15#	♦SCN	198- 34	ZC45	♦SCN	220-136
Z5B3 3	♦SLCB	167- 21	Z9 1,A,B,D	PWC	186- 53	Z1545	♦SLCB	172-151	ZB16#	♦SCN	200- 14	ZC47	♦SCN	221-159
Z5B3 6	♦SLCB	167-171	Z9.1C	PWC	186- 54	Z1550	♦SLCB	172-152	ZB18#	♦SCN	202-126	ZC50	♦SCN	222-107
Z5B3 9	♦SLCB	168-123	Z10Ø	LTTF	187- 76	Z1555	♦SLCB	172-153	ZB20#	♦SCN	205- 67	ZC51	♦SCN	223- 99
Z5B4 3	♦SLCB	169-123	Z10,A,B,D	PWC	188-135	Z1560	♦SLCB	172-154	ZB22#	♦SCN	207- 50	ZC52	♦SCN	223-182
Z5B4 7	♦SLCB	170-122	Z10C	PWC	188-136	Z1565	♦SLCB	172-155	ZB24	♦SCN	209- 32	ZC56	♦SCN	225- 16
Z5B5 1	♦SLCB	171-168	Z11Ø	LTTF	189-128	Z1570	♦SLCB	172-156	ZB27	♦SCN	211-114	ZC62	♦SCN	226-131
Z5B5.6	♦SLCB	173- 10	Z11,A,B,D	PWC	190-123	Z3433	CRL	165-106	ZB30	♦SCN	213-112	ZC68	♦SCN	228- 12
Z5B6 2	♦SLCB	175- 6	Z11C	PWC	190-124	Z3434	CRL	169- 32	ZB33	♦SCN	215- 79	ZC75	♦SCN	229-115
Z5B6 8	♦SLCB	177-101	Z12Ø	LTTF	191-160	Z5140	♦SLCB	173- 13	ZB36	♦SCN	216-177	ZC82	♦SCN	231- 2
Z5B7 5	♦SLCB	179-151	Z12,A,B,D	PWC	193- 26	Z5145	♦SLCB	173- 14	ZB39	♦SCN	218- 74	ZC91	♦SCN	232-115
Z5B8 2	♦SLCB	182- 16	Z12C	PWC	193- 27	Z5150	♦SLCB	173- 15	ZB43	♦SCN	219-150	ZC100	♦SCN	234- 4
Z5B9 1	♦SLCB	185-130	Z13Ø	LTTF	194- 63	Z5155	♦SLCB	173- 16	ZB47	♦SCN	221- 91	ZC105	♦SCN	234-128
Z5B10	♦SLCB	188- 15	Z13,A,B,D	PWC	195- 62	Z5160	♦SLCB	173- 17	ZB51	♦SCN	223- 39	ZC110	♦SCN	235-127
Z5B11	♦SLCB	190- 27	Z13C	PWC	195- 63	Z5165	♦SLCB	173- 18	ZB56	♦SCN	224-123	ZC0112	♦FERB	268- 71
Z5B12	♦SLCB	192- 84	Z14,A,B,D	PWC	196- 96	Z5170	♦SLCB	173- 19	ZB62	♦SCN	226- 70	ZC120	♦SCN	236-160
Z5B13	♦SLCB	194-153	Z14C	PWC	196- 97	Z5240	♦SLCB	173- 20	ZB68	♦SCN	227-128	ZC130	♦SCN	238- 18
Z5B15	♦SLCB	197-104	Z15Ø	LTTF	196-183	Z5245	♦SLCB	173- 21	ZB75	♦SCN	229- 44	ZC0132	♦FERB	268- 72
Z5B16	♦SLCB	199-104	Z15,A,B,D	PWC	198- 31	Z5250	♦SLCB	173- 22	ZB82	♦SCN	230-123	ZC140	♦SCN	238-158
Z5B18	♦SLCB	202- 11	Z15C	PWC	198- 32	Z5255	♦SLCB	173- 23	ZB91	♦SCN	232- 59	ZC150	♦SCN	240- 3
Z5B20	♦SLCB	204-157	Z16,A,B,D	PWC	200- 11	Z5260	♦SLCB	173- 24	ZB100	♦SCN	233-106	ZC160	♦SCN	241- 16
Z5B22	♦SLCB	206-125	Z16C	PWC	200- 12	Z5265	♦SLCB	173- 25	ZB110	♦SCN	235- 70	ZC180	♦SCN	242-133
Z5B24	♦SLCB	208-121	Z17,A,B,D	PWC	201- 39	Z5270	♦SLCB	173- 26	ZB120	♦SCN	236- 94	ZC0181	♦FERB	274- 22
Z5C3 0	♦SLCB	166-125	Z17C	PWC	201- 40	Z5540	♦SLCB	173- 27	ZB130	♦SCN	237-131	ZC200△	♦FERB	523- 19
Z5C3 3	♦SLCB	167- 22	Z18Ø	LTTF	201- 86	Z5545	♦SLCB	173- 28	ZB150	♦SCN	239-110	ZC200#	♦SCN	243-170
Z5C3 6	♦SLCB	167-172	Z18,A,B,D	PWC	202-123	Z5550	♦SLCB	173- 29	ZB160	♦SCN	240-132	ZC201	♦FERB	523- 29
Z5C3 9	♦SLCB	168-124	Z18C	PWC	202-124	Z5555	♦SLCB	173- 30	ZB180	♦SCN	242- 73	ZC202	♦FERB	523- 30
Z5C4 3	♦SLCB	169-124	Z19,A,B,D	PWC	203-178	Z5560	♦SLCB	173- 31	ZB200	♦SCN	243-113	ZC240	SOIF	208-132
Z5C4 7	♦SLCB	170-123	Z19C	PWC	203-179	Z5565	♦SLCB	173- 32	ZBC6 8	♦SCN	178- 71	ZC0241	♦FERB	274- 23
Z5C5 1	♦SLCB	171-169	Z20,A,B,D	PWC	205- 64	Z5570	♦SLCB	173- 33	ZBC7.5	♦SCN	180-113	ZC241	SOIF	208-133
Z5C5 6	♦SLCB	173- 11	Z20C	PWC	205- 65	ZA6 8,A,B	SCN	178- 29	ZBC8 2	♦SCN	182-166	ZC0300	♦FERB	597- 30
Z5C6 2	♦SLCB	175- 7	Z22Ø	LTTF	206- 35	ZA7 5,A,B	SCN	180- 74	ZBC9 1	♦SCN	186- 96	ZC0310	♦FERB	597- 31
Z5C6 8	♦SLCB	177-102	Z22,A,B,D	PWC	207- 47	ZA8 2,A,B	SCN	182-123	ZBC10	♦SCN	188-185	ZC600	♦FERB	268- 73
Z5C7 5	♦SLCB	179-152	Z22C	PWC	207- 48	ZA9 1,A,B	SCN	186- 55	ZBC11	♦SCN	190-172	ZC601	♦FERB	276- 5
Z5C8.2	♦SLCB	182- 17	Z24,A,B,D	PWC	209- 29	ZA10,A,B	SCN	188-137	ZBC12	♦SCN	193- 78	ZC620	♦FERB	597- 32
Z5C9 1	♦SLCB	185-131	Z24C	PWC	209- 30	ZA11,A,B	SCN	190-125	ZBC13	♦SCN	195-107	ZC700	♦FERB	537- 73
Z5C10	♦SLCB	188- 16	Z25,A,B,D	PWC	210- 45	ZA12,A,B	SCN	193- 28	ZBC14	♦SCN	196-108	ZC701	♦FERB	539- 52
Z5C11	♦SLCB	190- 28	Z25C	PWC	210- 46	ZA13,A,B	SCN	195- 64	ZBC15	♦SCN	198- 80	ZC702	♦FERB	542- 62
Z5C12	♦SLCB	192- 85	Z27Ø	LTTF	210-105	ZA15,A,B	SCN	198- 33	ZBC17	♦SCN	201- 48	ZC703	♦FERB	544- 5
Z5C13	♦SLCB	194-154	Z27,A,B,D	PWC	211-111	ZA16,A,B	SCN	200- 13	ZBC18	♦SCN	202-170	ZC704	♦FERB	547- 19
Z5C15	♦SLCB	197-105	Z27C	PWC	211-112	ZA18,A,B	SCN	202-125	ZBC19	♦SCN	204- 6	ZC705	♦FERB	548- 24
Z5C16	♦SLCB	199-105	Z30,A,B,D	PWC	213-109	ZA20,A,B	SCN	205- 66	ZBC20	♦SCN	205-110	ZC706	♦FERB	551- 53
Z5C18	♦SLCB	202- 12	Z30C	PWC	213-110	ZA22,A,B	SCN	207- 49	ZBC22	♦SCN	207- 95	ZC707	♦FERB	552- 94
Z5C20	♦SLCB	204-158	Z33Ø	LTTF	214- 91	ZA24,A,B	SCN	209- 31	ZBC24	♦SCN	209- 73	ZC708△	LUCB	183- 72
Z5C22	♦SLCB	206-126	Z33,A,B,D	PWC	215- 76	ZA27,A,B	SCN	211-113	ZBC25	♦SCN	210- 55	ZC708Ø	♦FERB	555- 65
Z5C24	♦SLCB	208-122	Z33C	PWC	215- 77	ZA30,A,B	SCN	213-111	ZBC27	♦SCN	211-161	ZC709△	LUCB	186-178
Z5D3 0	♦SLCB	166-126	Z35Ø	LTTF	216- 51	ZA33,A,B	SCN	215- 78	ZBC30	♦SCN	213-156	ZC709Ø	♦FERB	556- 61
Z5D3 3	♦SLCB	167- 23	Z36,A,B,D	PWC	216-174	ZA36,A,B	SCN	216-176	ZBC33	♦SCN	215-125	ZC710△	LUCB	189- 99
Z5D3 6	♦SLCB	167-173	Z36C	PWC	216-175	ZA39,A,B	SCN	218- 73	ZBC36	♦SCN	217- 21	ZC710Ø	♦FERB	558- 91
Z5D3.9	♦SLCB	168-125	Z39Ø	LTTF	217-133	ZA43,A,B	SCN	219-149	ZBC39	♦SCN	218-102	ZC711△	LUCB	191- 66
Z5D4 3	♦SLCB	169-125	Z39,A,B,D	PWC	218- 71	ZA47,A,B	SCN	221- 90	ZBC43	♦SCN	219-179	ZC711Ø	♦FERB	559- 76
Z5D4 7	♦SLCB	170-124	Z39C	PWC	218- 72	ZA51,A,B	SCN	223- 38	ZBC45	♦SCN	220-107	ZC712△	LUCB	193-192
Z5D5 1	♦SLCB	171-170	Z43,A,B,D	PWC	219-147	ZA56,A,B	SCN	224-122	ZBC47	♦SCN	221-124	ZC712Ø	♦FERB	560-107
Z5D5 6	ITTB	173- 12	Z43C	PWC	219-148	ZA62,A,B	SCN	226- 69	ZBC50	♦SCN	222- 77	ZC713△	LUCB	195-198
	♦SLCB		Z45,A,B,D	PWC	220- 99	ZA68,A,B	SCN	227-127	ZBC51	♦SCN	223- 67	ZC713Ø	♦FERB	561- 82
Z5D6 2	♦SLCB	175- 8	Z45C	PWC	220-100	ZA75,A,B	SCN	229- 43	ZBC52	♦SCN	223-170	ZC714	♦FERB	562- 53
Z5D6.8	♦SLCB	177-103	Z47,A,B,D	PWC	221- 88	ZA82,A,B	SCN	230-122	ZBC56	♦SCN	224-154	ZC715	♦LUCB	198-195
Z5D7 5	♦SLCB	179-153	Z47C	PWC	221- 89	ZA91,A,B	SCN	232- 58	ZBC62	♦SCN	226- 98	ZC716	♦LUCB	200-138
Z5D8 2	♦SLCB	182- 18	Z50,A,B,D	PWC	222- 69	ZA100,A,B	SCN	233-105	ZBC68	♦SCN	227-159	ZC718	♦LUCB	203- 87
Z5D9 1	♦SLCB	185-132	Z50C	PWC	222- 70	ZA110,A,B	SCN	235- 69	ZBC75	♦SCN	229- 72	ZC720	♦LUCB	206- 11
Z5D10	♦SLCB	188- 17	Z51,A,B,D	PWC	223- 36	ZA120,A,B	SCN	236- 93	ZBC82	♦SCN	230-150	ZC722	♦LUCB	208- 9
Z5D11	♦SLCB	190- 29	Z51C	PWC	223- 37	ZA130,A,B	SCN	237-130	ZBC91	♦SCN	232- 84	ZC724	♦LUCB	209-166
Z5D12	♦SLCB	192- 86	Z52,A,B,D	PWC	223-162	ZA150,A,B	SCN	239-109	ZBC100	♦SCN	233-133	ZC727	♦LUCB	212- 77
Z5D13	♦SLCB	194-155	Z52C	PWC	223-163	ZA160,A,B	SCN	240-131	ZBC105	♦SCN	234-118	ZC730	♦LUCB	214- 69
Z5D15	♦SLCB	197-106	Z56,A,B,D	PWC	224-120	ZA180,A,B	SCN	242- 72	ZBC110	♦SCN	235- 92	ZC733	♦LUCB	216- 32
Z5D16	♦SLCB	199-106	Z56C	PWC	224-121	ZA200,A,B	SCN	243-112	ZBC120	♦SCN	236-119	ZC736	♦LUCB	217-115
Z5D18	♦SLCB	202- 13	Z62,A,B,D	PWC	226- 67	ZAC6 8,A,B	SCN	178- 87	ZBC130	♦SCN	237-151	ZC739	♦LUCB	218-190
Z5D20	♦SLCB	204-159	Z62C	PWC	226- 68	ZAC7 5,A,B	SCN	180-130	ZBC140	♦SCN	238-127	ZC743	♦LUCB	220- 73
Z5D22	♦SLCB	206-127	Z68,A,B,D	PWC	227-125	ZAC8 2,A,B	SCN	182-183	ZBC150	♦SCN	239-133	ZC747	♦LUCB	222- 28
Z5D24	♦SLCB	208-123	Z68C	PWC	227-126	ZAC9.1,A,B	SCN	186-113	ZBC160	♦SCN	240-151	ZC751	♦LUCB	223-143
Z5D82CF	ITTB	183- 53	Z75,A,B,D	PWC	229- 41	ZAC10,A,B	SCN	189- 10	ZBC180	♦SCN	242- 96	ZC756	♦LUCB	225- 72
Z5D91CF	ITTB	186-163	Z75C	PWC	229- 42	ZAC11,A,B	SCN	191- 1	ZBC200	♦SCN	243-132	ZC762	♦LUCB	226-176
Z5D100CF	ITTB	189- 75	Z82,A,B,D	PWC	230-120	ZAC12,A,B	SCN	193- 99	ZC6 8	♦SCN	178-112	ZC768	♦LUCB	228- 65
Z5D110CF	ITTB	191- 44	Z82C	PWC	230-121	ZAC13,A,B	SCN	195-125	ZC7.5	♦SCN	180-155	ZC775	♦LUCB	229-164
Z5D120CF	ITTB	193-167	Z91,A,B,D	PWC	232- 56	ZAC15,A,B	SCN	198-100	ZC008	LUCB	181- 61	ZC782	♦LUCB	231- 51
Z5D130CF	ITTB	195-182	Z91C	PWC	232- 57	ZAC16,A,B	SCN	200- 72	ZC8 2	♦SCN	183- 23	ZC791	♦LUCB	232-158
Z5D150CF	ITTB	198-169	Z100,A,B,D	PWC	233-103	ZAC18,A,B	SCN	202-192	ZC009	LUCB	184-181	ZC799	♦LUCB	234- 57
Z5D160CF	ITTB	200-123	Z100C	PWC	233-104	ZAC20,A,B	SCN	205-130	ZC9 1	♦SCN	186-139	ZC2008	LUCB	181- 67
Z5D180CF	ITTB	203- 62	Z105,A,B,D	PWC	234-107	ZAC22,A,B	SCN	207-115	ZC010	LUCB	188- 44	ZC2009	LUCB	184-189
Z5D200CF	ITTB	205-191	Z105C	PWC	234-108	ZAC24,A,B	SCN	209- 92	ZC10	♦SCN	189- 37	ZC2010	LUCB	188-180
Z5D220CF	ITTB	207-184	Z110,A,B,D	PWC	235- 67	ZAC27,A,B	SCN	211-182	ZC011	LUCB	190- 46	ZC2011	LUCB	190-163
Z5D240CF	ITTB	209-151	Z110C	PWC	235- 68	ZAC30,A,B	SCN	213-177	ZC11	♦SCN	191- 19	ZC2012	LUCB	193- 73
Z5D270CF	ITTB	212- 53	Z120,A,B,D	PWC	236- 91	ZAC33,A,B	SCN	215-147	ZC012	LUCB	192-112	ZC2013	LUCB	195-102
Z5D300CF	ITTB	214- 49	Z120C	PWC	236- 92	ZAC36,A,B	SCN	217- 42	ZC12	♦SCN	193-127	ZC2015	LUCB	198- 75
Z5D330CF	ITTB	216- 8	Z130,A,B,D	PWC	237-128	ZAC39,A,B	SCN	218-118	ZC013	LUCB	194-173	ZC2016	LUCB	200- 50
Z5D360CF	ITTB	217- 95	Z130C	PWC	237-129	ZAC43,A,B	SCN	220- 11	ZC13	♦SCN	195-150	ZC2018	LUCB	202-165
Z5D390CF	ITTB	218-166	Z140,A,B,D	PWC	238-116	ZAC47,A,B	SCN	221-140	ZC14	♦SCN	196-142	ZC2020	LUCB	205-105
Z5D430CF	ITTB	220- 53	Z140C	PWC	238-117	ZAC51,A,B	SCN	223- 82	ZC015	LUCB	197-130	ZC2022	LUCB	207- 90
Z5D470CF	ITTB	222- 4	Z150,A,B,D	PWC	239-107	ZAC56,A,B	SCN	224-172	ZC15	♦SCN	198-127	ZC2024	LUCB	209- 68
Z5D510CF	ITTB	223-123	Z150C	PWC	239-108	ZAC62,A,B	SCN	226-113	ZC016	LUCB	199-124	ZC2027	LUCB	211-156
Z5D560CF	ITTB	225- 49	Z160,A,B,D	PWC	240-129	ZAC68,A,B	SCN	227-175	ZC17	♦SCN	201- 64	ZC2030	LUCB	213-151

△-Registered with JEDEC by this manufacturer

♦-Copy of mfr's data sheet may be ordered from D.A.T.A.

1. TYPE No. CROSS INDEX

IN TYPE NUMBER SEQUENCE

TYPE No.	MFRS	Pg&Line
ZC2033	LUCB	215-120
ZC3001	♦FERB	601- 87
ZC3002	♦FERB	601- 88
ZC3201	♦FERB	601- 89
ZC3202	♦FERB	601- 90
ZC5008	♦LUCB	183- 54
ZC5009	♦LUCB	186-164
ZC5010	♦LUCB	189- 76
ZC5011	♦LUCB	191- 45
ZC5012	♦LUCB	193-168
ZC5013	♦LUCB	195-183
ZC5015	♦LUCB	198-170
ZC5016	♦LUCB	200-124
ZC5018	♦LUCB	203- 63
ZC5020	♦LUCB	205-192
ZC5022	♦LUCB	207-185
ZC5024	♦LUCB	209-152
ZC5027	♦LUCB	212- 54
ZC5030	♦LUCB	214- 50
ZC5033	♦LUCB	216- 9
ZC5036	♦LUCB	217- 96
ZC5039	♦LUCB	218-167
ZC5043	♦LUCB	220- 54
ZC5047	♦LUCB	222- 5
ZC5051	♦LUCB	223-124
ZC5056	♦LUCB	225- 50
ZC5062	♦LUCB	226-157
ZC5068	♦LUCB	228- 44
ZC5075	♦LUCB	229-144
ZC5082	♦LUCB	231- 33
ZC5091	♦LUCB	232-141
ZC5099	♦LUCB	234- 39
ZCC6 8	♦SCN	178- 88
ZCC7 5	♦SCN	180-131
ZCC8 2	♦SCN	182-184
ZCC9 1	♦SCN	186-114
ZCC10	♦SCN	189- 11
ZCC11	♦SCN	191- 2
ZCC12	♦SCN	193-100
ZCC13	♦SCN	195-126
ZCC14	♦SCN	196-122
ZCC15	♦SCN	198-101
ZCC17	♦SCN	201- 53
ZCC18	♦SCN	202-193
ZCC19	♦SCN	204- 12
ZCC20	♦SCN	205-131
ZCC22	♦SCN	207-116
ZCC24	♦SCN	209- 93
ZCC25	♦SCN	210- 58
ZCC27	♦SCN	211-183
ZCC30	♦SCN	213-178
ZCC33	♦SCN	215-148
ZCC36	♦SCN	217- 43
ZCC39	♦SCN	218-119
ZCC43	♦SCN	220- 12
ZCC45	♦SCN	220-120
ZCC47	♦SCN	221-141
ZCC50	♦SCN	222- 91
ZCC51	♦SCN	223- 83
ZCC52	♦SCN	223-175
ZCC56	♦SCN	224-173
ZCC62	♦SCN	226-114
ZCC68	♦SCN	227-176
ZCC75	♦SCN	229- 91
ZCC82	♦SCN	230-166
ZCC91	♦SCN	232- 99
ZCC100	♦SCN	233-152
ZCC105	♦SCN	234-121
ZCC110	♦SCN	235-107
ZCC120	♦SCN	236-138
ZCC130	♦SCN	237-168
ZCC140	♦SCN	238-141
ZCC150	♦SCN	239-151
ZCC160	♦SCN	240-166
ZCC180	♦SCN	242-112
ZCC200	♦SCN	243-150
ZD3 3A,B	DII	167- 65
ZD3 6A,B	DII	168- 25
ZD3 9	INTG	168-181
	ITT	
ZD3 9A,B	DII	168-176
ZD4 3	INTG	169-179
	ITT	
ZD4 3A,B	DII	169-175
ZD4 7	INTG	170-187
	ITT	
ZD4 7A,B	DII	170-182
ZD5 1	INTG	172- 29
	ITT	
ZD5 1A,B	DII	172- 25
ZD5 6	INTG	173-103
	ITT	
ZD5 6A,B	DII	173- 97
ZD6 2	INTG	175- 78
	ITT	
ZD6.2A,B	DII	175- 73
ZD6 8Ø,A,B	DII	178- 31
ZD6 8#	INTG	178- 39
	ITT	
ZD7 5Ø,A,B	DII	180- 76
ZD7 5#	INTG	180- 82
	ITT	
ZD008	LUCB	181- 62
ZD8 2Ø,A,B	DII	182-125
ZD8 2#	INTG	182-133
	ITT	
ZD009	LUCB	184-182
ZD9 1Ø,A,B	DII	186- 57
ZD9 1#	INTG	186- 64
	ITT	
ZD010	LUCB	188- 45
ZD10Ø,A,B	DII	188-139
ZD10#	INTG	188-149
	ITT	

TYPE No.	MFRS	Pg&Line
ZD011	LUCB	190- 47
ZD11Ø,A,B	DII	190-127
ZD11#	INTG	190-135
	ITT	
ZD012	LUCB	192-113
ZD12Ø,A,B	DII	193- 30
ZD12#	INTG	193- 42
	ITT	
ZD013	LUCB	194-174
ZD13Ø,A,B	DII	195- 66
ZD13#	INTG	195- 74
	ITT	
ZD015	LUCB	197-131
ZD15Ø,A,B	DII	198- 35
ZD15#	INTG	198- 45
	ITT	
ZD016	LUCB	199-125
ZD16Ø,A,B	DII	200- 15
ZD16#	INTG	200- 23
	ITT	
ZD018	LUCB	202- 38
ZD18Ø,A,B	DII	202-127
ZD18#	INTG	202-137
	ITT	
ZD020	LUCB	204-178
ZD20Ø,A,B	DII	205- 68
ZD20#	INTG	205- 76
	ITT	
ZD022	LUCB	206-151
ZD22Ø,A,B	DII	207- 51
ZD22#	INTG	207- 61
	ITT	
ZD024	LUCB	208-143
ZD24Ø,A,B	DII	209- 33
ZD24#	INTG	209- 41
	ITT	
ZD027	LUCB	211- 34
ZD27Ø,A,B	DII	211-115
ZD27#	INTG	211-125
	ITT	
ZD030	LUCB	213- 44
ZD30Ø,A,B	DII	213-113
ZD30#	INTG	213-122
	ITT	
ZD033	LUCB	215- 8
ZD33Ø,A,B	DII	215- 80
ZD33#	INTG	215- 89
	ITT	
ZD36Ø,A,B	DII	216-178
ZD36#	INTG	217- 2
	ITT	
ZD39Ø,A,B	DII	218- 75
ZD39#	INTG	218- 82
	ITT	
ZD43Ø,A,B	DII	219-151
ZD43#	INTG	219-158
	ITT	
ZD47Ø,A,B	DII	221- 92
ZD47#	INTG	221-100
	ITT	
ZD51Ø,A,B	DII	223- 40
ZD51#	INTG	223- 47
	ITT	
ZD56Ø,A,B	DII	224-124
ZD56#	INTG	224-132
	ITT	
ZD62Ø,A,B	DII	226- 71
ZD62#	INTG	226- 78
	ITT	
ZD68Ø,A,B	DII	227-129
ZD68#	INTG	227-137
	ITT	
ZD75Ø,A,B	DII	229- 45
ZD75#	INTG	229- 52
	ITT	
ZD82Ø,A,B	DII	230-124
ZD82#	INTG	230-131
	ITT	
ZD91Ø,A,B	DII	232- 60
ZD91#	INTG	232- 66
	ITT	
ZD100Ø,A,B	DII	233-107
ZD100#	INTG	233-113
	ITT	
ZD110Ø,A,B	DII	235- 71
ZD110#	INTG	235- 76
	ITT	
ZD120Ø,A,B	DII	236- 95
ZD120#	INTG	236-101
	ITT	
ZD130Ø,A,B	DII	237-132
ZD130#	INTG	237-137
	ITT	
ZD150Ø,A,B	DII	239-111
ZD150#	INTG	239-117
	ITT	
ZD160Ø,A,B	DII	240-133
ZD160#	INTG	240-137
	ITT	
ZD180Ø,A,B	DII	242- 74
ZD180#	INTG	242- 79
	ITT	
ZD200Ø,A,B	DII	243-114
ZD200#	INTG	243-118
	ITT	
ZD2008	LUCB	181- 68
ZD2009	LUCB	184-190
ZD2010	LUCB	188-181
ZD2011	LUCB	190-164
ZD2012	LUCB	193- 74
ZD2013	LUCB	195-103
ZD2015	LUCB	198- 76
ZD2016	LUCB	200- 51
ZD2018	LUCB	202-166

TYPE No.	MFRS	Pg&Line
ZD2020	LUCB	205-106
ZD2022	LUCB	207- 91
ZD2024	LUCB	209- 69
ZD2027	LUCB	211-157
ZD2030	LUCB	213-152
ZD2033	LUCB	215-121
ZD5008	♦LUCB	183- 55
ZD5009	♦LUCB	186-165
ZD5010	♦LUCB	189- 77
ZD5011	♦LUCB	191- 46
ZD5012	♦LUCB	193-169
ZD5013	♦LUCB	195-184
ZD5015	♦LUCB	198-171
ZD5016	♦LUCB	200-125
ZD5018	♦LUCB	203- 64
ZD5020	♦LUCB	205-193
ZD5022	♦LUCB	207-186
ZD5024	♦LUCB	209-153
ZD5027	♦LUCB	212- 55
ZD5030	♦LUCB	214- 51
ZD5033	♦LUCB	216- 10
ZD5036	♦LUCB	217- 97
ZD5039	♦LUCB	218-168
ZD5043	♦LUCB	220- 55
ZD5047	♦LUCB	222- 6
ZD5051	♦LUCB	223-125
ZD5056	♦LUCB	225- 51
ZD5062	♦LUCB	226-158
ZD5068	♦LUCB	228- 45
ZD5075	♦LUCB	229-145
ZD5082	♦LUCB	231- 34
ZD5091	♦LUCB	232-142
ZD5099	♦LUCB	234- 40
ZE1 5	INTG	165- 69
ZE2	INTG	165-105
ZEC3 9	INRB	168-177
ZEC4.7	INRB	170-183
ZEC5.6	INRB	173- 98
ZEC6 8	INRB	178- 32
ZEC8 2	INRB	182-126
ZEC10	INRB	188-140
ZEC12	INRB	193- 31
ZEC15	INRB	198- 36
ZEC18	INRB	202-128
ZEC22	INRB	207- 52
ZEC27	INRB	211-116
ZEC30	INRB	213-114
ZF2 7	INTG	166- 47
	ITT	ITTB
ZF3.0	INTG	166-127
	ITT	ITTB
ZF3 3	INTG	167- 24
	ITT	ITTB
ZF3 6	INTG	167-174
	ITT	ITTB
ZF3 9	INTG	168-126
	ITT	ITTB
ZF4 3	INTG	169-126
	ITT	ITTB
ZF4 7	INTG	170-125
	ITT	ITTB
ZF5 1	INTG	171-171
	ITT	ITTB
ZF5 6	INTG	173- 34
	ITT	ITTB
ZF6A	SOIF	178- 33
ZF6.2	INTG	175- 9
	ITT	ITTB
ZF6.8	INTG	177-104
	ITT	ITTB
ZF7 5	INTG	179-154
	ITT	ITTB
ZF8A	SOIF	182-127
ZF8 2	INTG	182- 19
	ITT	ITTB
ZF9 1	INTG	185-133
	ITT	ITTB
ZF10	INTG	188- 18
	ITT	ITTB
ZF10A	SOIF	188-141
ZF10B	SOIF	233-108
ZF11	INTG	190- 30
	ITT	ITTB
ZF12	INTG	192- 87
	ITT	ITTB
ZF12A	SOIF	193- 32
ZF12B	SOIF	236- 96
ZF13	INTG	194-156
	ITT	ITTB
ZF15	INTG	197-107
	ITT	ITTB
ZF15A	SOIF	198- 37
ZF15B	SOIF	239-112
ZF16	INTG	199-107
	ITT	ITTB
ZF18	INTG	202- 14
	ITT	ITTB
ZF18A	SOIF	202-129
ZF18B	SOIF	242- 75
ZF20	INTG	204-160
	ITT	ITTB
ZF22	INTG	206-128
	ITT	ITTB
ZF22A	SOIF	207- 53
ZF24	INTG	208-124
	ITT	ITTB
ZF27	INTG	211- 11
	ITT	ITTB
ZF27A	SOIF	211-117
ZF30	INTG	213- 26
	ITT	ITTB
ZF33	INTG	214-168
	ITT	ITTB
ZF33A	SOIF	215- 81

TYPE No.	MFRS	Pg&Line
ZF39A	SOIF	218- 76
ZF47A	SOIF	221- 93
ZF56A	SOIF	224-125
ZF68A	SOIF	227-130
ZF82A	SOIF	230-125
ZG1	INTG	165- 34
	ITT	
ZG2 7	INTG	166- 48
	ITT	ITTB
ZG3.3	INTG	167- 25
	ITT	ITTB
ZG3 9	INTG	168-127
	ITT	ITTB
ZG4 7	INTG	170-126
	ITT	ITTB
ZG5 6	INTG	173- 35
	ITT	ITTB
ZG6 8	INTG	177-105
	ITT	ITTB
ZG8 2	INTG	182- 20
	ITT	ITTB
ZG10	INTG	188- 19
	ITT	ITTB
ZG12	INTG	192- 88
	ITT	ITTB
ZG15	INTG	197-108
	ITT	ITTB
ZG18	INTG	202- 15
	ITT	ITTB
ZG22	INTG	206-129
	ITT	ITTB
ZG27	INTG	211- 12
	ITT	ITTB
ZG33	INTG	214-169
	ITT	ITTB
ZH6.8,A,B	SCN	178- 34
ZH7 5,A,B	SCN	180- 77
ZH8 2,A,B	SCN	182-128
ZH9.1,A,B	SCN	186- 58
ZH10,A,B	SCN	188-142
ZH11,A,B	SCN	190-128
ZH12,A,B	SCN	193- 33
ZH13,A,B	SCN	195- 67
ZH15,A,B	SCN	198- 38
ZH16,A,B	SCN	200- 16
ZH18,A,B	SCN	202-130
ZH20,A,B	SCN	205- 69
ZH22,A,B	SCN	207- 54
ZH24,A,B	SCN	209- 34
ZH27,A,B	SCN	211-118
ZH30,A,B	SCN	213-115
ZH33,A,B	SCN	215- 82
ZH36,A,B	SCN	216-179
ZH39,A,B	SCN	218- 77
ZH43,A,B	SCN	219-152
ZH47,A,B	SCN	221- 94
ZH51,A,B	SCN	223- 41
ZH56,A,B	SCN	224-126
ZH62,A,B	SCN	226- 72
ZH68,A,B	SCN	227-131
ZH75,A,B	SCN	229- 46
ZH82,A,B	SCN	230-126
ZH91,A,B	SCN	232- 61
ZH100,A,B	SCN	233-109
ZH110,A,B	SCN	235- 72
ZH120,A,B	SCN	236- 97
ZH130,A,B	SCN	237-133
ZH150,A,B	SCN	239-113
ZH160,A,B	SCN	240-134
ZH180,A,B	SCN	242- 76
ZH200,A,B	SCN	243-115
ZHS101	♦FERB	389- 54
ZHS102	♦FERB	389- 55
ZHS103	♦FERB	389- 56
ZHS104	♦FERB	393-103
ZHS105	♦FERB	393-104
ZHS106	♦FERB	393-105
ZL1	INTG	165- 35
ZL3 9	INTG	169- 19
ZL4 7	INTG	171- 27
ZL5 6	INTG	173-145
ZL6 8	INTG	178-145
ZL8.2	INTG	183- 61
ZL10	INTG	189- 82
ZL12	INTG	193-175
ZL15	INTG	198-178
ZL18	INTG	203- 70
ZL22	INTG	207-192
ZL27	INTG	212- 60
ZL33	INTG	216- 15
ZL39	INTG	218-173
ZL47	INTG	222- 11
ZL56	INTG	225- 56
ZL68	INTG	228- 50
ZL82	INTG	231- 37
ZL100	INTG	234- 43
ZL120	INTG	237- 20
ZL150	INTG	240- 36
ZL180	INTG	242-158
ZM3.9△	PWC	168-178
ZM3 9Ø	INTG	168-182
	ITT	
ZM4 3	PWC	169-176
ZM4.7△	PWC	170-184
ZM4 7Ø	INTG	170-188
	ITT	
ZM5.1	PWC	172- 26
ZM5 6Ø	INTG	173-104
	ITT	
ZM5.6,A,B,D	PWC	173- 99
ZM5 6C	PWC	173-100
ZM6 2,A,B,D	PWC	175- 74
ZM6 2C	PWC	175- 75

TYPE No.	MFRS	Pg&Line
ZM6.8Ø	INTG	178- 40
	ITT	
ZM6.8,A,B,D	PWC	178- 35
ZM6.8C	PWC	178- 36
ZM7.5,A,B,D	PWC	180- 78
ZM7.5C	PWC	180- 79
ZM8 2Ø	INTG	182-134
	ITT	
ZM8.2,A,B,D	PWC	182-129
ZM8.2C	PWC	182-130
ZM9.1,A,B,D	PWC	186- 59
ZM9 1C	PWC	186- 60
ZM10Ø	INTG	188-150
	ITT	
ZM10,A,B,D	PWC	188-143
ZM10C	PWC	188-144
ZM11,A,B,D	PWC	190-129
ZM11C	PWC	190-130
ZM12△	PWC	193- 34
ZM12Ø	INTG	193- 43
	ITT	
ZM12,A,B,D	PWC	193- 35
ZM12C	PWC	193- 36
ZM13,A,B,D	PWC	195- 68
ZM13C	PWC	195- 69
ZM14,A,B,D	PWC	196- 98
ZM14C	PWC	196- 99
ZM15Ø	INTG	198- 46
	ITT	
ZM15,A,B,D	PWC	198- 39
ZM15C	PWC	198- 40
ZM16,A,B,D	PWC	200- 17
ZM16C	PWC	200- 18
ZM17,A,B,D	PWC	201- 41
ZM17C	PWC	201- 42
ZM18Ø	INTG	202-138
	ITT	
ZM18,A,B,D	PWC	202-131
ZM18C	PWC	202-132
ZM19,A,B,D	PWC	203-180
ZM19C	PWC	203-181
ZM20,A,B,D	PWC	205- 70
ZM20C	PWC	205- 71
ZM22Ø	INTG	207- 62
	ITT	
ZM22,A,B,D	PWC	207- 55
ZM22C	PWC	207- 56
ZM24,A,B,D	PWC	209- 35
ZM24C	PWC	209- 36
ZM25,A,B,D	PWC	210- 47
ZM25C	PWC	210- 48
ZM27Ø	INTG	211-126
	ITT	
ZM27,A,B,D	PWC	211-119
ZM27C	PWC	211-120
ZM30,A,B,D	PWC	213-116
ZM30C	PWC	213-117
ZM33Ø	INTG	215- 90
	ITT	
ZM33,A,B,D	PWC	215- 83
ZM33C	PWC	215- 84
ZM36,A,B,D	PWC	216-180
ZM36C	PWC	216-181
ZM39Ø	INTG	218- 83
	ITT	
ZM39,A,B,D	PWC	218- 78
ZM39C	PWC	225- 94
ZM43,A,B,D	PWC	219-153
ZM43C	PWC	219-154
ZM45,A,B,D	PWC	220-101
ZM45C	PWC	220-102
ZM47Ø	INTG	221-101
	ITT	
ZM47,A,B,D	PWC	221- 95
ZM47C	PWC	221- 96
ZM50,A,B,D	PWC	222- 71
ZM50C	PWC	222- 72
ZM51,A,B,D	PWC	223- 42
ZM51C	PWC	223- 43
ZM52,A,B,D	PWC	223-164
ZM52C	PWC	223-165
ZM56Ø	INTG	224-133
	ITT	
ZM56,A,B,D	PWC	224-127
ZM56C	PWC	224-128
ZM62,A,B,D	PWC	226- 73
ZM62C	PWC	226- 74
ZM68Ø	INTG	227-138
	ITT	
ZM68,A,B,D	PWC	227-132
ZM68C	PWC	227-133
ZM75,A,B,D	PWC	229- 47
ZM75C	PWC	229- 48
ZM82Ø	INTG	230-132
	ITT	
ZM82,A,B,D	PWC	230-127
ZM82C	PWC	230-128
ZM91,A,B,D	PWC	232- 62
ZM91C	PWC	232- 63
ZM100Ø	INTG	233-114
	ITT	
ZM100,A,B,D	PWC	233-110
ZM100C	PWC	233-111
ZM105,A,B,D	PWC	234-109
ZM105C	PWC	234-110
ZM110,A,B,D	PWC	235- 73
ZM110C	PWC	235- 74
ZM120Ø	INTG	236-102
	ITT	
ZM120,A,B,D	PWC	236- 98
ZM120C	PWC	236- 99
ZM130,A,B,D	PWC	237-134
ZM130C	PWC	237-135
ZM140,A,B,D	PWC	238-118

△-Registered with JEDEC by this manufacturer

♦-Copy of mfr's data sheet may be ordered from D.A.T.A.

1. TYPE No. CROSS INDEX

IN TYPE NUMBER SEQUENCE

TYPE No	MFRS	Pg&Line
ZM140C	PWC	238-119
ZM150⊘	INTG	239-118
	ITT	
ZM150,A,B,D	PWC	239-114
ZM150C	PWC	239-115
ZM160,A,B,D	PWC	240-135
ZM160C	PWC	240-136
ZM175,A,B,D	PWC	241-127
ZM175C	PWC	241-128
ZM180⊘	INTG	242-80
	ITT	
ZM180,A,B,D	PWC	242-77
ZM180C	PWC	242-78
ZM200,A,B,D	PWC	243-116
ZM200C	PWC	243-117
ZM220,A,B,D	PWC	244-45
ZM220C	PWC	244-46
ZP2 7	INTG	166-49
ZP3	INTG	166-128
ZP3 3	INTG	167-26
ZP3 6	INTG	167-175
ZP3 9	INTG	168-128
ZP4 3	INTG	169-127
ZP4 7	INTG	170-127
ZP5 1	INTG	171-172
ZP5 6	INTG	173-36
ZP6 2	INTG	175-10
ZP6 8#	INTG	177-106
ZP7 5#	INTG	179-155
ZP8 2#	INTG	182-21
ZP9 1#	INTG	185-134
ZP10#	INTG	188-20
ZP11#	INTG	190-31
ZP12#	INTG	192-89
ZP13#	INTG	194-157
ZP15#	INTG	197-109
ZP16#	INTG	199-108
ZP18#	INTG	202-16
ZP20#	INTG	204-161
ZP22#	INTG	206-130
ZP24#	INTG	208-125
ZP27#	INTG	211-13
ZP30#	INTG	213-27
ZP33#	INTG	214-170
ZR10	♦FERB	294-89
ZR10T	♦FERB	294-90
ZR11	♦FERB	301-94
ZR11T	♦FERB	301-95
ZR12	♦FERB	312-92
ZR12T	♦FERB	312-93
ZR13	♦FERB	322-54
ZR13T	♦FERB	322-55
ZR14	♦FERB	331-78
ZR14T	♦FERB	331-79
ZR15	♦FERB	340-59
ZR15T	♦FERB	340-60
ZR20	♦FERB	296-27
ZR21	♦FERB	303-94
ZR22	♦FERB	315-3
ZR23	♦FERB	324-15
ZR24	♦FERB	334-2
ZR30C	♦FERB	297-31
ZR31C	♦FERB	305-26
ZR32C	♦FERB	316-68
ZR33C	♦FERB	325-16
ZR34C	♦FERB	335-71
ZR35C	♦FERB	343-64
ZR60	♦FERB	293-69
ZR61	♦FERB	300-17
ZR62	♦FERB	310-104
ZR63	♦FERB	321-25
ZR64	♦FERB	329-78
ZR66	♦FERB	346-109
ZR68	♦FERB	348-66
ZR200	♦FERB	296-28
ZR201	♦FERB	303-95
ZR202	♦FERB	315-4
ZR204	♦FERB	334-3
ZS7⊘	♦SLCB	176-114
ZS9	♦SLCB	183-116
ZS10	LTTF	187-83
ZS10A	♦FERB	251-33
ZS10B	♦FERB	251-34
ZS11	♦SLCB	191-68
ZS12	LTTF	191-166
	♦SLCB	
ZS14	♦SLCB	196-13
ZS15	LTTF	197-6
ZS17	♦SLCB	200-157
ZS20A	♦FERB	254-97
ZS20B	♦FERB	254-98
ZS21	♦FERB	257-22
ZS22	♦FERB	258-81
ZS23	♦SLCB	208-15
ZS24	♦FERB	259-48
ZS30A	♦FERB	250-64
ZS30B	♦FERB	250-65
ZS31A	♦FERB	254-38
ZS31B	♦FERB	254-39
ZS32A	♦FERB	257-54
ZS32B	♦FERB	257-55
ZS33	LTTF	214-95
ZS33A	♦FERB	258-103
ZS33B	♦FERB	258-104
ZS34A	♦FERB	259-70
ZS34B	♦FERB	259-71
ZS40	♦FERB	266-90
ZS40F	♦FERB	266-91
ZS41	♦FERB	271-94
ZS41F	♦FERB	271-95
ZS42	♦FERB	278-41
ZS42F	♦FERB	278-42
ZS47	LTTF	220-162
ZS50	♦FERB	251-43

TYPE No.	MFRS	Pg&Line
ZS51	♦FERB	254-99
ZS52	♦FERB	257-33
ZS53	♦FERB	258-87
ZS90	♦FERB	250-53
ZS91	♦FERB	254-24
ZS92	♦FERB	257-41
ZS94	♦FERB	259-53
ZS100	♦FERB	250-62
ZS101	♦FERB	254-35
ZS102	♦FERB	257-51
ZS103	♦FERB	258-101
ZS104	♦FERB	259-66
ZS106	♦FERB	260-15
ZS108	♦FERB	260-46
ZS120	♦FERB	250-54
ZS121	♦FERB	254-25
ZS122	♦FERB	257-42
ZS123	♦FERB	258-92
ZS124	♦FERB	259-54
ZS130	♦FERB	272-37
ZS131	♦FERB	271-108
ZS132	♦FERB	279-27
ZS133	♦FERB	274-44
ZS134	♦FERB	280-105
ZS140	♦FERB	264-108
ZS141	♦FERB	270-25
ZS142	♦FERB	267-34
ZS150	♦FERB	272-74
ZS151	♦FERB	279-36
ZS152	♦FERB	272-75
ZS153	♦FERB	279-37
ZS154	♦FERB	272-76
ZS155	♦FERB	279-38
ZS170	♦FERB	293-68
ZS171	♦FERB	300-16
ZS172	♦FERB	310-103
ZS174	♦FERB	329-77
ZS176	♦FERB	346-110
ZS178	♦FERB	360-1
ZS270	♦FERB	294-91
ZS271	♦FERB	301-96
ZS272	♦FERB	312-94
ZS274	♦FERB	331-80
ZS276	♦FERB	348-103
ZS278	♦FERB	361-69
ZSA7	♦SLCB	176-115
ZSA11	♦SLCB	191-69
ZSF1 0	♦SLCB	165-43
ZSF1 1	♦SLCB	165-45
ZSF1 2	♦SLCB	165-51
ZSF1 3	♦SLCB	165-56
ZSF1 5	♦SLCB	165-73
ZSF1 6	♦SLCB	165-81
ZSF1 8	♦SLCB	165-101
ZSF2 0	♦SLCB	165-122
ZSF2 2	♦SLCB	165-143
ZSF2 4	♦SLCB	165-180
ZSF2 7	♦SLCB	166-54
ZSF3 0	♦SLCB	166-133
ZSF3 3	♦SLCB	167-35
ZSF3 6	♦SLCB	167-182
ZSF3 9	♦SLCB	168-138
ZSF4 3	♦SLCB	169-134
ZSF4 7	♦SLCB	170-138
ZSF5 1	♦SLCB	171-180
ZSF5 6	♦SLCB	173-47
ZSF6 2	♦SLCB	175-24
ZSF6 8	♦SLCB	177-118
ZSF7 5	♦SLCB	179-166
ZSF8 2	♦SLCB	182-34
ZSF9 1	♦SLCB	185-145
ZSF10	♦SLCB	188-33
ZSF11	♦SLCB	190-40
ZSF12	♦SLCB	192-104
ZSF13	♦SLCB	194-165
ZSF15	♦SLCB	197-123
ZSF16	♦SLCB	199-116
ZSF18	♦SLCB	202-29
ZSF20	♦SLCB	204-170
ZSF22	♦SLCB	206-142
ZSF24	♦SLCB	208-134
ZSF27	♦SLCB	211-26
ZSF30	♦SLCB	213-35
ZSF33	♦SLCB	214-181
ZSF36	♦SLCB	216-120
ZSF39	♦SLCB	218-17
ZSF43	♦SLCB	219-98
ZSF47	♦SLCB	221-32
ZSF51	♦SLCB	222-171
ZTK33	♦ITT	214-87
ZU3 9	INTG	168-183
ZU4 7	INTG	170-189
ZU5 6	INTG	173-105
ZU6 8	INTG	178-41
ZU8 2	INTG	182-135
ZU10	INTG	188-151
ZU12	INTG	193-44
ZU15	INTG	198-47
ZU18	INTG	202-139
ZU22	INTG	207-63
ZU27	INTG	211-127
ZU33	INTG	215-91
ZU39	INTG	218-84
ZU47	INTG	221-102
ZU56	INTG	224-134
ZU68	INTG	227-139
ZU82	INTG	230-133
ZU100	INTG	233-115
ZU120	INTG	236-103
ZU150	INTG	239-119
ZU180	INTG	242-81
ZW2 7	INTG	166-59
ZW3	INTG	166-138
ZW3 3	INTG	167-41

TYPE No.	MFRS	Pg&Line
ZW3 6	INTG	167-188
ZW3 9	INTG	168-144
ZW4.3	INTG	169-144
ZW4.7	INTG	170-147
ZW5.1	INTG	171-190
ZW5.6	INTG	173-57
ZW6.2	INTG	175-33
ZW6 8	INTG	177-129
ZW7 5	INTG	179-177
ZW8 2	INTG	182-44
ZW9 1	INTG	185-156
ZW10	INTG	188-46
ZW11	INTG	190-48
ZW12	INTG	192-114
ZW13	INTG	194-175
ZW15	INTG	197-132
ZW16	INTG	199-126
ZW18	INTG	202-39
ZW20	INTG	204-179
ZW22	INTG	206-152
ZW24	INTG	208-144
ZW27	INTG	211-35
ZW30	INTG	213-45
ZW33	INTG	215-9
ZX3.9	INTG	169-20
ZX4 3	INTG	170-14
ZX4 7	INTG	171-28
ZX5 1	INTG	172-58
ZX5.6	INTG	173-146
ZX6 2	INTG	175-123
ZX6 8	INTG	178-146
ZX7 5	INTG	180-186
ZX8 2	INTG	183-62
ZX9 1	INTG	186-169
ZX10	INTG	189-83
ZX11	INTG	191-52
ZX12	INTG	193-176
ZX13	INTG	195-188
ZX15	INTG	198-179
ZX16	INTG	200-128
ZX18	INTG	203-71
ZX20	INTG	205-198
ZX22	INTG	207-193
ZX24	INTG	209-156
ZX27	INTG	212-61
ZX30	INTG	214-55
ZX33	INTG	216-16
ZX36	INTG	217-101
ZX39	INTG	218-174
ZX43	INTG	220-59
ZX47	INTG	222-12
ZX51	INTG	223-129
ZX56	INTG	225-57
ZX62	INTG	226-162
ZX68	INTG	228-51
ZX75	INTG	229-149
ZX82	INTG	231-38
ZX91	INTG	232-145
ZX100	INTG	234-44
ZX110	INTG	235-154
ZX120	INTG	237-21
ZX130	INTG	238-43
ZX150	INTG	240-37
ZX160	INTG	241-35
ZX180	INTG	242-82
ZX200	INTG	242-159
ZY3 9	INTG	168-184
ZY4 3	INTG	169-180
ZY4 7	INTG	170-190
ZY5 1	INTG	172-30
ZY5 6	INTG	173-106
ZY6 2	INTG	175-79
ZY6 8	INTG	178-42
ZY7 5	INTG	180-83
ZY8 2	INTG	182-136
ZY9 1	INTG	186-65
ZY10	INTG	188-152
ZY11	INTG	190-136
ZY12	INTG	193-45
ZY13	INTG	195-75
ZY15	INTG	198-48
ZY16	INTG	200-24
ZY18	INTG	202-140
ZY20	INTG	205-77
ZY22	INTG	207-64
ZY24	INTG	209-42
ZY27	INTG	211-128
ZY30	INTG	213-123
ZY33	INTG	215-92
ZY36	INTG	217-3
ZY39	INTG	218-85
ZY43	INTG	219-159
ZY47	INTG	221-103
ZY51	INTG	223-48
ZY56	INTG	224-135
ZY62	INTG	226-79
ZY68	INTG	227-140
ZY75	INTG	229-53
ZY82	INTG	230-134
ZY91	INTG	232-67
ZY100	INTG	233-116
ZY110	INTG	235-77
ZY120	INTG	236-104
ZY130	INTG	237-138
ZY150	INTG	239-120
ZY160	INTG	240-138
ZY180	INTG	242-83
ZY200	INTG	243-119
ZZ3 3	LTTF	166-155
ZZ3 6	LTTF	167-112
ZZ3 9	LTTF	168-63
ZZ4 3	LTTF	169-58
ZZ4 7△	INRB	170-148
cont.next col.		

TYPE No.	MFRS	Pg&Line
ZZ4 7△ (cont.)	INRC	
	INRI	
	INRJ	
ZZ4 7⊘	LTTF	170-47
ZZ5 1	LTTF	171-93
ZZ5.6△	INRB	173-58
	INRC	
	INRI	
	INRJ	
ZZ5.6⊘	LTTF	172-104
ZZ6.2	LTTF	174-73
ZZ6.8△	INRB	177-130
	INRC	
	INRI	
	INRJ	
ZZ6.8⊘	LTTF	176-199
ZZ7.5	LTTF	179-37
ZZ8 2	LTTF	181-87
ZZ9.1	LTTF	184-217
ZZ10△	INRB	188-47
	INRC	
	INRI	
	INRJ	
ZZ10⊘	LTTF	187-77
ZZ11	LTTF	189-129
ZZ12△	INRB	192-115
	INRC	
	INRI	
	INRJ	
ZZ12⊘	LTTF	191-161
ZZ13	LTTF	194-64
ZZ15△	INRB	197-133
	INRC	
	INRI	
	INRJ	
ZZ15⊘	LTTF	197-1
ZZ18△	INRB	202-40
	INRC	
	INRI	
	INRJ	
ZZ18⊘	LTTF	201-87
ZZ22△	INRB	206-153
	INRC	
	INRI	
	INRJ	
ZZ22⊘	LTTF	206-36
ZZ27△	INRB	211-36
	INRC	
	INRI	
	INRJ	
ZZ27⊘	LTTF	210-106
ZZ33	LTTF	214-92
ZZ39	LTTF	217-134

△-Registered with JEDEC by this manufacturer

♦-Copy of mfr's data sheet may be ordered from D.A.T.A.

2. SILICON REFERENCE DIODES

IN ORDER OF (1) REF. VOLTAGE, (2) DISSIPATION, and (3) TYPE No.

LINE No.	3 TYPE No.	TOLERANCE 20 10 5 2 ± (%)	NOM. REF VOLT. (V)	2 MAX. DISS. @ 25°C (W)	TEST CUR Izt (A)	MAX. DYN. IMP (Ω)	TEMP COEFF Tc	MAX TEMP (°C)	DWG. No
1#	AA129*$	10	20	13	5 0m			75A	C73
2	1N3287$*	20	26		1 0m	60	63	90A	A1
3	JAN1N3287W	20	26		1 0m	60		90A	DO7
4	SV1LR	15△	410m	750m	10u	4 0k	730m	150A	A1fq
5#	ZO 5	10	55	15	5 0m	15		150A	C18d
6	G129	10	56		1 0m			150S	A1
7	HS2	10	56	25	1 0m	60	20	175S	DO7
8	HS4	10	56	10	1 0m	1 5	20	175S	DO7
9	HS5	10	56	10	1 0m	1 5	20	175S	DO7
10	SM72*		.57		2	1 5	35	125A	DO4
11#	MD1	9 6	575m	300m	1 0m	90		150A	DO7
12	SZ23*	10	60		1 0m	45	33	150	DO7
13	SV1⊠∅	3 3⊠	60	.75	1 0m	40	38	150A	A1fq
14	1N912,A	xx	62	50	1 0m	60	32	150A	DO7
15	1N913,A	xx	.62	60	1 0m	60	32	150A	DO7
16	4M 64FR10/1N816	9 4	640m		1 0m	50 ∅			DO7
17	JAN1N816*	10	640m		1 0m	50		150A	A1dd
18	G130	10	64		1 0m			150S	A1
19	ST22*	10	.64		1 0m	60	31	150	DO7
20	HS1	10	64	25	1 0m	60	20	175S	DO7
21	STB1*	10	.65		10m			175A	A1bs
22#	ZO.6	10	65	15	5 0m	20		150A	C18d
23	1N4362*	10	65	40	1 0m	40		200A	DO7
24	MZ2360*	5	67	4 §	10m			175J	DO7
25	HS3	10	68	10	1 0m	60	.20	175S	DO7
26#	1S990	15	70	25	10m	10	22	150J	A1ce
27▼#	BZ102-0V7	7	700m	250m	5 0m	10	23	150J	DO7
28#	BZY83D1	10	70	25	5 0m	8 0 ∅	35 △	150J	C1g
29#	55Q1*		70	40	5 0m	8 0	25	125A	A1ce
30#	NTO 6C0	5	700m	600m	5 0m	8 0		125J	M498
31#	7701*	5	70	1 1	100m	1 0	28	125A	A1bu
32	HS6	5	74	50	20m	3 0	25	175S	DO7
33	ZO 7	10	75	15	5 0m	25		150A	C18d
34#	ZG1	7	770m	400m	5 0	8 0	24	150J	DO7
35#	ZL1	10	770m	25 ⊠	100	2 0	33	150J	M41
36	1N3896	5	775	25	50m	2 5	20	150	DO7
37#	BZX55C0V8	6	780m		5 0m	8 0			A1ct
38#	BZY84D1	10	80		100m	2 0	40		M72
39	ST37*		83	25	100m	15 ∅		150	DO7
40	1N2938	15	90	2 ⊠	100m	1 5		125J	DO4
41#	BZY85D1	10	1 0	25 §	5 0m	8 0	35 △	150J	A171f
42	C5001	10	1 0	25	10m	35	1 0	75	DO7
43#	ZSF1 0	1	1 0	500m	7 5m	10	1 0	150S	M487
44	SR5702*	10	1.1		1 0m				DO7
45#	ZSF1 1	1	1 1	500m	7 5m	10	1 0	150S	M487
46	SR5701*	10	1 15		1 0m				DO7
47	SV3140	5	1 15		10m	20	28	85A	A1ha
48	1N3774	2	1 15	34	10m	20		100S	A1ha
49	SR5700*	10	1 2		1 0m				DO7
50#	MD2	8 3	1 2	300m	1 0m	180		150A	DO7
51#	ZSF1 2	1	1 2	500m	7 5m	10	1 0	150S	M487
52	CSR5702*	10	1 25		10m				DO7
53	PS3532,A*	xx	1.25	25	7 5m	20	32	150	DO7
54	CSR5701*	10	1 3		10m				DO7
55	STB2*	10	1 3		10m			175A	A1bs
56#	ZSF1.3	1	1 3	500m	7 5m	10	1 0	150S	M487
57	MZ2361*	5	1.35	4 §	10m			175J	DO7
58	4M1.36FR2	2 2	1 36		10m	20 ∅			DO7
59	4M1 36FR5	5.2	1 36		10m	20 ∅			DO7
60	CSR5700*	10	1 4		10m				DO7
61#	1S991	7 0	1 4	25	10m	20	22	150J	A1ce
62▼#	BZ102-1V4	7	1 4	250m	5 0m	20	23	150J	DO7
63#	5502*	5	1 4	40	5 0m	20	24	125A	A1ce
64	BZX75C1V4*	5	1 4	400m§	10m	10	33	175J	DO7
65	HS7	5	1.4	1 0	20m	5 0	25	175S	A1gm
66	PS1171,A	xx	1 4	1 0	10m	20	23	150A	A1gd
67#	7702*	5	1.4	1 1	100m	2 0	21	125A	A1bu
68#	BZ113	7	1 45		5 0m	20		150	M375a
69#	ZE1 5	7	1 45	70m	5 0	20	24	100	M375
70	SV3141	5	1 5		10m	20	23	125A	A1ha
71	1N3897	5	1 5	25	30m	5 0	22	150	DO7
72	1N3392∅	10	1.5	50	50m	10	10	200A	P5
73#	ZSF1 5	1	1 5	500m	7 5m	10	1 0	150S	M487
74	1 25AGD		1 5	2.5	2.5		20	100	A3g
75	5AGD		1 5	15	10		20	100	M338
76	15AGD		1 5	37	25		20	100	M338
77	HS8	5	1.55	1 0	20m	6 0	20	175S	A1gm
78	PS1172,A	xx	1.55	1.0	10m	28	21	150A	A1gd
79	SR5705*	5	1.6		1 0m				DO7
80	1N5666A	10	1 6	250m§	20m	25		125A	C29n
81#	ZSF1 6	1	1 6	500m	7.5m	10	1 0	150S	M487
82	ST38*		1.65	25	100m	30 ∅		150	DO7
83	SR5704*	5	1 7		1.0m				DO7
84	HS9	5	1.7	40	20m	10	19	175S	A1jk
85	PS1173,A	xx	1 7	1.0	10m	36	19	150A	A1gd
86#	MD3	5 7	1 75	300m	1 0m	270		150A	DO7
87	CSR5705*	10	1.8		10m				DO7
88	SR5703*	5	1.8		1 0m				DO7
89	1N4614	5	1 8	25	25m	1 2k		200	DO14
90	1N4678	5	1.8	25	05m			200A	DO14
91	1N5667A	10	1 8	250m§	20m	25		125A	C29n
92	MZ4614	1 0	1 8	250m	250u	1 2k		200J	DO7
93	JAN1N4614	5	1 8	400m	250u	1 2k	7.5	175A	A1sx
94	CZF1 8D,10,5	xxx	1 8	.40 ⊠	250u	1 2k	6.3	175J	M452
95	MACZF1 8D,10,5	xxx	1.8	40 ⊠	250u	1 2k	6 3	175J	M453
96	MBCZF1.8D,10,5	xxx	1 8	400m⊠	250u	1 2k	6.3	175J	M454
97	MCCZF1.8D,10,5	xxx	1 8	40 ⊠	250u	1 2k	6.3	175J	M455
98	MDCZF1.8D,10,5	xxx	1.8	40 ⊠	250u	1 2k	6.3	150A	M410
99	MZC1 8B10	§†	1.8	400m§	250u	1.2k		175J	M468
100	1N3393∅	10	1 8	50	50m	10	10	200A	P5
101#	ZSF1.8	1	1 8	500m	7 5m	10	1.0	150S	M487
102	1N370	20	1.85		20m			150A	A1er
103	SV3142	5	1 9		10m	30	49	85A	A1ha
104	PS3533,A*	xx	1.9	25	7 5m	30	48	150	DO7
105#	ZE2	7	2 0	07	5 0m	30	24	100	M375
106	Z3433	10	2 0	15	10m	65	1 0	150S	A1jk
107	1N3898	5	2 0	.25	20m	10	23	150	DO7
108	1N4615	5	2 0	25	250u	1.2k		200	DO14
109	1N4679	5	2.0	.25	05m			200A	DO14
110	1N5668A	10	2 0	250m§	20m	25		125A	C29n
111#	1S992	30	2 0	.25	10m	80	7 0	150J	A1ce
112	C5002	10	2 0	25	10m	70	1 0	75	DO7
113#	MZ1002	30	2 0	.25	10m	45	7 0	175J	DO7
114	MZ4615	1.0	2 0	250m	250u	1 2k		200J	DO7
115	JAN1N4615	5	2 0	400m	250u	1 2k	7 5	175A	A1sx
116	CZF2 0D,10,5	xxx	2 0	400m⊠	250u	1 2k	6.3	175J	M452
117	MACZF2 0D,10,5	xxx	2 0	400m⊠	250u	1 2k	6 3	175J	M453
118	MBCZF2 0D,10,5	xxx	2 0	400m⊠	250u	1 2k	6 3	175J	M454
119	MCCZF2 0D,10,5	xxx	2 0	400m⊠	250u	1 2k	6 3	175J	M455
120	MDCZF2 0D,10,5	xxx	2.0	400m⊠	250u	1 2k	6 3	150A	M410
121	MZC2 0B10	§†	2 0	400m§	250u	1 2k		175J	M468
122#	ZSF2.0	1	2.0	500m	7 5m	10	1 0	150S	M487
123	4M2 04FR2	3 9	2 04		10m	30 ∅			DO7
124	4M2 04FR5	4 9	2 04		10m	30 ∅			DO7
125▼#	BZ102-2V1	10	2 1	250m	5 0m	30	23	150J	DO7
126#	5503*	5	2 1	40	5 0m	30	23	125A	A1ce
127	BZX75C2V1*	5	2 1	400m§	10m	15	50	175J	DO7
128	PS1174,A	xx	2 1	1 0	10m	30	23	150A	A1gd
129	HS10	5	2 1	1 4	20m	7 5	25	175S	A1jk
130	1N3477,A	xx	2 2	25	5.0m	60		175	A60p
131	1N4616	5	2.2	25	25m	1 3k		200	DO14
132	1N4680	5	2.2	.25	.05m			200A	DO14
133	1N5669A	10	2 2	250m§	20m	25		125A	C29n
134	MZ4616	1 0	2.2	250m	250u	1 3k		200J	DO7
135	JAN1N4616	5	2 2	400m	250u	1 3k	7 5	175A	A1sx
136	CZF2 2D,10,5	xxx	2 2	40 ⊠	250u	1 3k	5 8	175J	M452
137	MACZF2 2D,10,5	xxx	2 2	40 ⊠	250u	1 3k	5 8	175J	M453
138	MBCZF2 2D,10,5	xxx	2 2	400m⊠	250u	1 3k	5.8	175J	M454
139	MCCZF2 2D,10,5	xxx	2 2	40 ⊠	250u	1 3k	5 8	175J	M455
140	MDCZF2.2D,10,5	xxx	2 2	.40 ⊠	250u	1 3k	5 8	150A	M410
141	MZC2 2B10	§†	2 2	400m§	250u	1.3k		175J	M468
142	1N3394∅	10	2 2	50	50m	10	10	200A	P5
143#	ZSF2 2	1	2 2	500m	7.5m	10	1.0	150S	M487
144	SV3143	5	2 25		10m	30	51	125A	A1ha
145#	MD4	6 6	2 25	300m	1.0m	360		150A	DO7
146	1N3198	2	2.25	40	10m	30		125S	A1ha
147	HR2.3	5	2 3	25	5 0m	60		175A	DO7
148	PS1175,A	xx	2.3	1.0	10m	42	21	150A	A1gd
149	1N371	15	2 35		20m			150A	A1er
150	HS11	5	2.35	1.4	20m	9 0	20	175S	A1jk
151	1/4M2 4AZ,10,5	*§∅	2 4	25	10m	60	7 5	175J	A1cy
152	1N4360	5	2 4	.25	10m	60		175J	DO7
153	1N4617	5	2 4	.25	25m	1 4k		200	DO14
154	1N4681	5	2.4	.25	05m			200A	DO14
155	MZ4617	1 0	2.4	250m	250u	1 4k		200J	DO7
156#	Z1A2 4	1	2 4	320m	5 0m	80	9 0 △	150A	C29
157#	Z1B2 4	5	2 4	320m	5.0m	80	9.0 △	150A	C29
158#	Z1C2 4	10	2 4	320m	5.0m	80	9 0 △	150A	C29
159#	Z1D2.4	15	2 4	320m	5 0m	80	9 0 △	150A	C29
160▼#	1A52	5	2 4	400m	20m	30	8 5	200J	A159
161	1N4370,A	xx	2 4	40	20m	30		175	DO7
162	JAN1N4370A	5	2.4	400m	20m	30	8 5	175A	A1dd
163	JAN1N4617	5	2 4	400m	250u	1 4k	7 5	175A	A1sx
164	CZF2 4D,10,5	xxx	2 4	40 ⊠	250u	1 4k	3 7	175J	M452
165	CZG2 4D,10,5	xxx	2 4	.40 ⊠	20m	30	8 5	175J	M452
166	MACZF2.4D,10,5	xxx	2 4	40 ⊠	250u	1.4k	3 7	175J	M453
167	MACZG2 4D,10,5	xxx	2 4	40 ⊠	20m	30	8 5	175J	M453
168	MBCZF2 4D,10,5	xxx	2 4	400m⊠	250u	1 4k	3 7	175J	M454
169	MBCZG2 4D,10,5	xxx	2 4	40 ⊠	20m	30	8 5	175J	M454
170	MCCZF2 4D,10,5	xxx	2 4	40 ⊠	250u	1 4k	3.7	175J	M455
171	MCCZG2 4D,10,5	xxx	2 4	40 ⊠	20m	30	8 5	175J	M455
172	MDCZF2 4D,10,5	xxx	2 4	.40 ⊠	250u	1 4k	3 7	150A	M410
173	MDCZG2 4D,10,5	xxx	2 4	.40 ⊠	20m	30	8 5	150A	M410
174	MZ500-1	10	2 4	.4 §	20m	35 ∅	8.5	175J	DO7
175	MZC2 4A10	†	2 4	400m§	21m	53	8 5 △	175J	M468
176	MZC2 4B10	§†	2 4	400m§	250u	1 4k		175J	M468
177	1N5221	20†	2 4	.50	20m			200A	DO7
178	1N5221A,B	§∅	2 4	.50	20m	30	8.5	200A	DO7
179	MZ92-2 4	†	2 4	500m§	20m		103	150J	C103
180#	ZSF2.4	1	2 4	500m	7 5m	10	1 0	150S	M487
181#	ZOA2.4	1	2.4	520m	5 0m	50	9.0 △	150J	A1ef
182#	ZOB2 4	5	2 4	520m	5.0m	50	9.0 △	150J	A1ef
183#	ZOC2 4	10	2.4	520m	5.0m	50	9.0 △	150J	A1ef
184#	ZOD2.4	15	2.4	520m	5.0m	50	9 0 △	150J	A1ef
185	SZ2 4	xxxx	2.4	1.0	20m	14 ∅	5.4	150A	A3g
186	1N5670A	10	2.5	250m§	20m	25		125A	C29n
187	PS3534,A*	xx	2.5	.25	7.5m	40	64	150	DO7
188	ST39*		2.5	.25	100m	45 ∅		150	DO7
189	MZC2 5A10	†	2.5	400m§	20m	53	8 5 △	175J	M468
190	1N5222	20†	2.5	.50	20m			200A	DO7
191	1N5222A,B	§∅	2 5	.50	20m	30	8 5	200A	DO7
192	MZ92-2.5	†	2.5	500m§	20m		103	150J	C103
193	PS1176,A	xx	2.5	1.0	10m	54	19	150A	A1gd

SYMBOLS AND CODES EXPLAINED IN INTERPRETER

2. SILICON REFERENCE DIODES

IN ORDER OF (1) REF. VOLTAGE, (2) DISSIPATION, and (3) TYPE No.

LINE No	3 TYPE No	TOLERANCE 20 10 5 2 ± (%)	NOM. REF. VOLT. (V)	2 MAX. DISS. @ 25°C (W)	TEST CUR Izt (A)	MAX. DYN. IMP. (Ω)	TEMP. COEFF Tc	MAX. TEMP (°C)	DWG. No.
1	HS12	5	2 55	60	20m	15	19	175S	A1gt
2	STB4*	10	2 6		10m			175A	A1fg
3	1N465	10	2 6	250m	5 0m	60 △		200A	C1
4	1N465A	5	2 6	250m	5 0m	60 △		200A	C1
5	1N465B	1	2 6	250m	5.0m	60 △		200A	C1
6	1N702	20	2 6	25	5 0m	60		200A	A1cw
7	1N702A	5	2.6	25	5 0m	60		200A	A1cw
8#	1S752	xxx	2.6	25	10m	60	9 5	150	C1d
9	PS6465	13	2.6	50	10m	60		200J	A1gd
10	SV3144	5	2 65		10m	40	66	85A	A1ha
11	1/4M2 7AZ,10,5	*§Ø	2 7	25	10m	60	7 0	175J	A1cy
12	1N4618	5	2 7	25	25m	1 5k		200	DO14
13	1N4682	5	2 7	.25	05m			200A	DO14
14#	1101	10Ø	2.7	25	10m	65	7.0	150J	C18f
15#	BZY85C2V7	5	2 7	250m	5 0m	80	7 0	150J	DO7
16#	HS2027	5	2 7	25	5 0m			175A	DO7
17	MZ4618	⊘	2 7	250m	250u	1 5k		200J	DO7
18	PD6000,A	xx	2.7	25	10m	60		150	A109
19	PD6041	5	2 7	.25	10m	45		150	A2c
20#	Z1A2 7	1	2.7	320m	5 0m	80	9 0 △	150A	C29
21#	Z1B2 7	5	2 7	320m	5 0m	80	9 0 △	150A	C29
22#	Z1C2 7	10	2 7	320m	5 0m	80	9 0 △	150A	C29
23#	Z1D2 7	15	2 7	320m	5 0m	80	9.0 △	150A	C29
24▼#	1A53	5	2 7	400m	20m	30	8 0	200J	A159
25	1N4371,A	xx	2 7	40	20m	30		175	DO7
26	JAN1N4371A	5	2 7	400m	20m	30	8 0	175A	A1dd
27	JAN1N4618	5	2 7	400m	250u	1 5k	7 5	175A	A1sx
28#	5506	5	2 7	40	5 0m	80	8 5	125A	A1ce
29▼	BZX55C2V7	5	2.7	400m	5 0m	75		150A	DO35
30▼#	BZY85B2V7	2	2 7	400m	5 0m	80	7 5	150J	DO7
31	C6100	10	2 7	40	5 0m	85 Ø	1 0	175	M185
32	C6100A	5	2 7	40	5 0m	85 Ø	1 0	175	M185
33	CZF2 7D,10,5	xxx	2 7	40 ⊘	250u	1 5k	5 0	175J	M452
34	CZG2 7D,10,5	xxx	2 7	40 ⊘	20m	30	8 0	175J	M452
35#	HS7027	5	2 7	40	5 0m			175A	DO7
36	MACZF2 7D,10,5	xxx	2 7	40 ⊘	250u	1 5k	5.0	175J	M453
37	MACZG2 7D,10,5	xxx	2 7	40 ⊘	20m	30	8 0	175J	M453
38	MBCZF2 7D,10,5	xxx	2 7	400m⊘	250u	1 5k	5 0	175J	M454
39	MBCZG2 7D,10,5	xxx	2 7	40 ⊘	20m	30	8 0	175J	M454
40	MCCZF2 7D,10,5	xxx	2 7	40 ⊘	250u	1.5k	5 0	175J	M455
41	MCCZG2 7D,10,5	xxx	2 7	40 ⊘	20m	30	8 0	175J	M455
42	MDCZF2 7D,10,5	xxx	2 7	40 ⊘	250u	1 5k	5 0	150A	M410
43	MDCZG2 7D,10,5	xxx	2.7	.40 ⊘	20m	30	8 0	150A	M410
44	MZ500-2	10	2 7	4 §	20m	30 Ø	8 0	175J	DO7
45	MZC2 7A10	†	2 7	400m§	19m	52	8 0 △	175J	M468
46	MZC2 7B10	§†	2.7	400m§	250u	1 5k		175J	M468
47#	ZF2 7	5	2 7	400m	5 0m	80	7 0	150J	DO7
48#	ZG2 7	10	2.7	400m	5 0m	100	7 0	150J	DO7
49#	ZP2 7	5	2 7	400m	5.0m	80	6 5	150J	DO7
50	1N3395Ø	10	2.7	50	50m	20	10	200A	P5
51	1N5223	20†	2 7	.50	20m			200A	DO7
52	1N5223A,B	§Ø	2.7	50	20m	30	8 0	200A	DO7
53	MZ92-2.7	†	2 7	500m§	20m		101	150J	C103
54#	ZSF2 7	1	2 7	500m	7 5m	10	1 0	150S	M487
55#	ZOA2 7	1	2.7	520m	5 0m	50	9 0 △	150J	A1ef
56#	ZOB2 7	5	2 7	520m	5 0m	50	9 0 △	150J	A1ef
57#	ZOC2 7	10	2 7	520m	5 0m	50	9.0 △	150J	A1ef
58#	ZOD2 7	15	2 7	520m	5 0m	50	9 0 △	150J	A1ef
59#	ZW2 7	5	2 7	600m	5.0m	80	7.0	150J	A1bg
60	SZ2 7	xxxx	2 7	1.0	20m	16 Ø	5 5	150A	A3g
61#	7706	5	2 7	1 1	100m	7 0	8.5	125A	A1bu
62#	1301	10Ø	2.7	5.0	100m	7.0	7.0	150J	A9h
63	1N5671A	10	2.8	250m§	20m	25		125A	C29n
64▼#	BZ102-2V8	7	2 8	250m	5 0m	40	23	150J	DO7
65	GLA28,A,B	xxx	2 8	25	20m	50	7 2	175	DO7
66	HR2 8	5	2 8	25	5 0m	60		175A	DO7
67	MGLA28,A,B	xxx	2.8	.25	20m	50	7 2	150	A2
68♦#	2A43Ø	10	2 8	400m	10m	80	7 0	200J	A159
69	BZX75C2V8*	5	2.8	400m§	10m	20	66	175J	DO7
70	MZC2.8A10	†	2 8	400m§	18m	51	8 0 △	175J	M468
71	1N5224	20†	2 8	50	20m			200A	DO7
72	1N5224A,B	§Ø	2 8	50	20m	30	8.0	200A	DO7
73	MZ92-2 8	†	2 8	500m§	20m		100	150J	C103
74	HS13	5	2 8	1 8	20m	10	25	175S	A1jk
75	PS1177,A	xx	2 85	1 0	10m	40	23	150A	A1gd
76	1N372	15	2 9		15m			150A	A1er
77	SV3145	5	3 0		10m	40	.68	125A	A1ha
78	1/4M3 0AZ,10,5	*§Ø	3 0	25	10m	55	6.8	175J	A1cy
79	1N4619	5	3 0	.25	25m	1 6k		200	DO14
80	1N4683	5	3 0	25	05m			200A	DO14
81#	1S993	20	3.0	.25	10m	70	6 0	150J	A1ce
82#	9970	5	3.0	.25	10m	65	7.0	150J	C18f
83#	BZY85C3	5	3 0	.25	5 0m	80	50	150J	DO7
84	C5003	10	3 0	.25	10m	70	1 0	75	DO7
85#	HS2030	5	3 0	25	5 0m			175A	DO7
86#	KS2030A	5	3.0	250m	5 0m	200	8.0 △	150A	DO7
87#	MZ1003	20	3 0	250m	10m	55	6 5	175J	DO7
88	MZ4619	⊘	3 0	250m	250u	1 6k		200J	DO7
89	PD6001,A	xx	3 0	.25	10m	60		150	A109
90	PD6042	5	3 0	25	10m	45		150	A2c
91#	Z1A3 0	1	3 0	320m	5 0m	80	9 0 △	150A	C29
92#	Z1B3 0	5	3 0	320m	5 0m	80	9 0 △	150A	C29
93#	Z1C3.0	10	3.0	320m	5 0m	80	9.0 △	150A	C29
94#	Z1D3.0	15	3 0	320m	5 0m	80	9 0 △	150A	C29
95▼#	1A54	5	3 0	400m	20m	29	7 5	200J	A159
96	1N4372,A	xx	3.0	40	20m	29		175	DO7
97	JAN1N4372A	5	3.0	400m	20m	29	7 5	175A	A1dd
98	JAN1N4619	5	3 0	400m	250u	1 6k	7.5	175A	A1sx

LINE No.	3 TYPE No.	TOLERANCE 20 10 5 2 ± (%)	NOM. REF. VOLT. (V)	2 MAX. DISS. @ 25°C (W)	TEST CUR. Izt (A)	MAX. DYN. IMP. (Ω)	TEMP. COEFF Tc	MAX. TEMP (°C)	DWG. No.
99#	1S2030A	5	3.0	40	5.0m	200	7.0	150A	A1
100#	1S7030A	5	3 0	40	5.0m	200	7 0	175A	A1
101♦#	2A28Ø	10	3.0	400m	10m	80	7.0	200J	A159
102#	5507	5	3 0	.40	5.0m	80	7 5	125A	A1ce
103▼	BZX55C3V0	5	3 0	400m	5 0m	75		150A	DO35
104▼#	BZY85B3	2	3.0	400m	5.0m	80	7.0	150J	DO7
105	C6101	10	3.0	40	5.0m	70 Ø		175	M185
106	C6101A	5	3.0	40	5 0m	70 Ø		175	M185
107	CZF3 0D,10,5	xxx	3 0	.40 ⊘	250u	1 6k	6 0	175J	M452
108	CZG3 0D,10,5	xxx	3.0	.40 ⊘	20m	29	7 5	175J	M452
109#	HS7030	5	3.0	.40	5.0m			175A	DO7
110#	KS030A	5	3.0	400m	5 0m	150	10 △	150A	DO7
111	MACZF3.0D,10,5	xxx	3.0	.40 ⊘	250u	1 6k	6 0	175J	M453
112	MACZG3 0D,10,5	xxx	3 0	40 ⊘	20m	29	7.5	175J	M453
113	MBCZF3 0D,10,5	xxx	3.0	400m⊘	250u	1 6k	6 0	175J	M454
114	MBCZG3 0D,10,5	xxx	3 0	40 ⊘	20m	29	7 5	175J	M454
115	MCCZF3 0D,10,5	xxx	3.0	.40 ⊘	250u	1 6k	6 0	175J	M455
116	MCCZF3.9D,10,5	xxx	3.0	400m⊘	250u	1 6k	5 0	175J	M455
117	MCCZG3 0D,10,5	xxx	3 0	40 ⊘	20m	29	7 5	175J	M455
118	MDCZF3.0D,10,5	xxx	3.0	40 ⊘	250u	1 6k	6.0	150A	M410
119	MDCZG3 0D,10,5	xxx	3.0	40 ⊘	20m	29	7 5	150A	M410
120	MZ500-3	10	3.0	.4 §	20m	30 Ø	7 5	175J	DO7
121	MZC3.0A10	†	3.0	400m§	17m	50	7 5 △	175J	M468
122	MZC3.0B10	§†	3.0	400m§	250u	1.6k		175J	M468
123#	Z5A3.0	1	3.0	400m§	5.0m	80	7 0 △	200J	A1hs
124#	Z5B3.0	5	3 0	400m§	5.0m	80	7.0 △	200J	A1hs
125#	Z5C3.0	10	3.0	400m§	5 0m	80	7 0 △	200J	A1hs
126#	Z5D3.0	15	3.0	400m§	5.0m	80	7.0 △	200J	A1hs
127#	ZF3 0	5	3.0	400m	5.0m	80	6.5	150J	DO7
128#	ZP3	5	3.0	400m	5.0m	80	6 0	150J	DO7
129	1N5225	20†	3 0	50	20m			200A	DO7
130	1N5225A,B	§Ø	3 0	50	20m	29	7 5	200A	DO7
131	MZ92-3 0	†	3 0	500m§	20m		9 0	150J	C103
132	PS8900	5	3.0	.50	20m	24	7 5	150	A60p
133#	ZSF3.0	1	3 0	500m	7.5m	10	1 0	150S	M487
134#	ZOA3.0	1	3.0	520m	5 0m	50	9 0 △	150J	A1ef
135#	ZOB3.0	5	3 0	520m	5.0m	50	9.0 △	150J	A1ef
136#	ZOC3 0	10	3.0	520m	5 0m	50	9 0 △	150J	A1ef
137#	ZOD3 0	15	3.0	520m	5 0m	50	9.0 △	150J	A1ef
138#	ZW3	5	3.0	600m	5 0m	80	6 5	150J	A1bg
139	G3 0T20,10,5	xxx	3.0	1 0	82m	12	7 0	175A	DO15
140	SZ3.0	xxxx	3.0	1 0	20m	17 Ø	5.5	150A	A3g
141#	Z4A3.0	1	3.0	1.0	100m	4 0	9 0 △	150J	A1ef
142#	Z4B3.0	5	3.0	1 0	100m	4.0	9 0 △	150J	A1ef
143#	Z4C3 0	10	3.0	1 0	100m	4.0	9.0 △	150J	A1ef
144#	Z4D3.0	15	3 0	1 0	100m	4 0	9.0 △	150J	A1ef
145#	7707	5	3 0	1 1	100m	7.0	7.5	125A	A1bu
146#	9980	5	3.0	5 0	.10	7 0	7.0	150J	A9h
147	1N5672A	10	3.1	250m§	20m	25		125A	C29n
148	GLA31,A,B	xxx	3 1	25	20m	30	6 7	175	DO7
149	MGLA31,A,B	xxx	3 1	25	20m	30	6 7	150	A2
150	HS14	5	3.1	1 8	20m	12	20	175S	A1jk
151#	RZ3.3	5	3.3	08	5.0m	90 △		150A	C18e
152#	RZZ3 3	5	3.3	.08	5 0m	100 △		150A	C18e
153#	AZ3.3	5	3.3	15	5 0m	100		170A	DO7
154#	Z3.3	5	3.3	15	5.0m	90 △		150A	C18d
155#	ZZ3.3	5	3.3	.15	5 0m	100 △		150A	C18d
156	1/4M3.3AZ,10,5	xxx	3.3	.25	10m	55	6 5	175J	A1cy
157	1N4620	5	3.3	250m	250u	1 6k		200A	DO14
158	1N4684	5	3.3	25	.05m			200A	DO14
159#	1102	10Ø	3.3	.25	10m	65	7.0	150J	C18f
160#	BZY85C3V3	5	3 3	.25	5.0m	80	6.0	150J	DO7
161#	HS2033	5	3.3	.25	5 0m			175A	DO7
162#	KS2033A	5	3 3	250m	5.0m	120	8 0 △	150A	DO7
163#	KS2033B	10	3.3	250m	5.0m	150	8 0 △	150A	DO7
164#	MR33C-H	5	3.3	.25	5.0m	100		250	DO7
165	MZ4620	⊘	3.3	250m	250u	1.6k		200J	DO7
166	PD6002,A	xx	3.3	.25	10m	55		150	A109
167	PD6043	5	3 3	.25	10m	45		150	A2c
168	ST41*		3 3	.25	100m	6 Ø		150	DO7
169#	Z1A3.3	1	3.3	320m	5.0m	80	9.0 △	150A	C29
170#	Z1B3.3	5	3 3	320m	5.0m	80	9 0 △	150A	C29
171#	Z1C3 3	10	3.3	320m	5 0m	80	9 0 △	150A	C29
172#	Z1D3 3	15	3 3	320m	5.0m	80	9.0 △	150A	C29
173▼#	1A55	5	3 3	400m	20m	28	7 0	200J	A159
174	1N746	10	3 3	400m	20m	28	6 2	175A	A1
175	1N746A	5	3 3	400m	20m	28	6 2	175A	A1
176	JAN1N746A	5	3 3	400m	20m	24	7 0	175A	A1dd
177	1N3506	5	3 3	40	20m	24	6 2	200A	DO7
178	JAN1N4620	5	3.3	400m	250u	1 6k	7 5	175A	A1sx
179	1N5518	20	3 3	400m§	20m			175A	DO7
180	1N5518A	10	3 3	400m§	20m			175A	DO7
181	1N5518B	5	3 3	400m§	20m	26		175A	DO7
182▼	JAN1N5518B	5	3 3	400m	20m	26	7.0	200A	DO14
183	1N5518C	2	3 3	400m§	20m	26		175A	DO7
184	1N5518D	1	3 3	400m§	20m	26		175A	DO7
185#	1S2033	10	3 3	.40	5 0m	150	7.0	150A	A1
186#	1S2033A	5	3 3	40	5 0m	120	7 0	150A	A1
187#	1S7033	10	3 3	.40	5 0m	150	7.0	150A	A1
188#	1S7033A	5	3.3	40	5 0m	100	7.0	175A	A1
189#	1S7033B	15	3.3	.40	5 0m	200	7.0	150A	A1
190♦#	2A44Ø	10	3 3	400m	10m	80	7 0	200J	A159
191#	5508	5	3.3	.40	5 0m	80	6.5	125A	A1ce
192▼	BZX55C3V3	5	3.3	400m	5 0m	75	6.3	150A	DO35
193▼#	BZY85B3V3	2	3.3	400m	5 0m	80	6 5	150J	DO7
194#	BZY88C3V3	5	3 3	40	5.0m	85 Ø		150J	DO7
195	C6102	10	3 3	40	5.0m	60 Ø		175	M185

SYMBOLS AND CODES EXPLAINED IN INTERPRETER

2. SILICON REFERENCE DIODES

IN ORDER OF (1) REF. VOLTAGE, (2) DISSIPATION, and (3) TYPE No.

LINE No.	TYPE No	3 TOLERANCE 1 20 10 5 2 ± (%)	NOM. REF. VOLT. (V)	2 MAX. DISS @ 25°C (W)	TEST CUR. Izt (A)	MAX. DYN. IMP. (Ω)	TEMP. COEFF Tc	MAX. TEMP (°C)	DWG. No.
1	C6102A	5	3.3	40	5 0m	60 Ø		175	M185
2	CZF3 3D,10,5	xxx	3.3	400mØ	250u	1 6k	6 0	175J	M452
3	CZG3 3D,10,5	xxx	3 3	40 Ø	20m	28	6 6	175J	M452
4#	HS7033	5	3 3	40	5 0m			175A	DO7
5#	KS033A	5	3.3	400m	5 0m	100	10 Δ	150A	DO7
6#	KS033B	10	3.3	400m	5 0m	150	2.0 Δ	150A	DO7
7#	LR33H	5	3 3	40	5 0m	100	6.6	150S	DO7
8	M4Z3 3,A,-20	xx*	3 3	40	38m	27		150A	A1kk
9	MACZF3 3D,10,5	xxx	3 3	400mØ	250u	1 6k	6 0	175J	M453
10	MACZG3 3D,10,5	xxx	3 3	40 Ø	20m	28	6 6	175J	M453
11	MBCZF3 3D,10,5	xxx	3 3	400mØ	250u	1 6k	6 0	175J	M454
12	MBCZG3 3D,10,5	xxx	3 3	40 Ø	20m	28	6 6	175J	M454
13	MCCZF3 3D,10,5	xxx	3 3	400mØ	250u	1 6k	6.0	175J	M455
14	MCCZG3 3D,10,5	xxx	3.3	40 Ø	20m	28	6 6	175J	M455
15	MDCZF3 3D,10,5	xxx	3 3	400mØ	250u	1.6k	6 0	150A	M410
16	MDCZG3 3D,10,5	xxx	3 3	40 Ø	20m	28	6 6	150A	M410
17	MZ500-4	10	3 3	4 §	20m	30 Ø	7 0	175J	DO7
18	MZC3.3A10	†	3.3	400m§	15m	47	7 0 Δ	175J	M468
19	MZC3.3B10	§†	3.3	400m§	250u	1 6k		175J	M468
20#	Z5A3.3	1	3 3	400m§	5.0m	80	7 0 Δ	200J	A1hs
21#	Z5B3.3	5	3 3	400m§	5.0m	80	7 0 Δ	200J	A1hs
22#	Z5C3.3	10	3.3	400m§	5.0m	80	7 0 Δ	200J	A1hs
23#	Z5D3.3	15	3 3	400m§	5 0m	80	7 0 Δ	200J	A1hs
24#	ZF3.3	5	3 3	400m	5 0m	80	6 0	150J	DO7
25#	ZG3 3	10	3.3	400m	5 0m	100	6 5	150J	DO7
26#	ZP3 3	5	3 3	400m	5 0m	80	5 5	150J	DO7
27	1/2Z3 3T5	5	3 3	50	20m	26		175	A94f
28	1N3396Ø	10	3 3	50	30m	20	10	200A	P5
29	1N5226	20†	3 3	50	20m			200A	DO7
30	1N5226A,B	§Ø	3 3	50	20m	24	7 0	200A	DO7
31▼	HEPZ0206-RT	10	3 3	500m	20	50			C103
32	MZ92-3.3	†	3 3	500m§	20m		6.8	150J	C103
33	PS8901	5	3 3	50	20m	24	7 3	150	A60p
34	S5226,A,B	xxx	3 3	500m	20m	28		175	DO41
35#	ZSF3 3	1	3.3	500m	7 5m	10	1 0	150S	M487
36#	Z0A3 3	1	3 3	520m	5 0m	50	9 0 Δ	150J	A1ef
37#	Z0B3 3	5	3.3	520m	5 0m	50	9 0 Δ	150J	A1ef
38#	Z0C3.3	10	3 3	520m	5 0m	50	9 0 Δ	150J	A1ef
39#	Z0D3.3	15	3 3	520m	5 0m	50	9 0 Δ	150J	A1ef
40#	UZ3 3	10	3 3	60	180m	10	6 0	135A	DO3
41#	ZW3.3	5	3 3	600m	5 0m	80	6.0	150J	A1bg
42	MMZ3 3,A,-20	xx*	3 3	75	38m	27		150A	A1kk
43	1D3.3A,B	xx	3 3	1 0	76m	10		150A	A1cn
44	1N3821	10	3 3	1 0	76m	10	7 5	175A	A1bx
45	1N3821A	5	3 3	1 0	76m	10	7 5	175A	A31a
46	JAN1N3821A	5	3 3	1.0	76m	10	7 5	175A	A31c
47	1N4649	5	3 3	1 0	76m	400	7 5	200A	DO15
48	1N4728,A	xx	3 3	1 0	76m	10		200A	A1ay
49	1Z3 3,A,B	xxx	3 3	1.0	76m	10		150	A1ay
50#	1Z3 3T10,5	xx	3.3	1 §	50m	13	6 0	165A	DO3
51#	1ZC3 3T10,5	xx	3 3	1.0	50m	13	6 0	165A	A31p
52#	11Z6F,AF	12,6	3 3	1.0	10m	60		150J	DO13
53▼	BZX85C3V3	5	3 3	1 0	80m	20	6 3	150A	DO15
54	CD31-00001	5	3.3	1 0	76m	10	7 0	200A	A1ce
55	CD31-12008	5	3 3	1 0	76m	15			
56	CZ3 3	†	3 3	1 0	70m	20		175	DO15
57	G3 3T20,10,5	xxx	3 3	1.0	76m	10	6 0	175A	DO15
58	LPM3.3,A,-20	xx*	3 3	1.0	76m	10		150A	A1kk
59	SZ3 3	xxxx	3 3	1.0	20m	17 Ø	5 4	150A	A3g
60#	Z2A33F	20§Ø	3 3	1.0	20m	37	6 0	100J	A141
61#	Z4A3 3	1	3 3	1 0	100m	4 0	9 0 Δ	150J	A1ef
62#	Z4B3.3	5	3 3	1 0	100m	4.0	9 0 Δ	150J	A1ef
63#	Z4C3 3	10	3 3	1.0	100m	4 0	9 0 Δ	150J	A1ef
64#	Z4D3 3	15	3 3	1.0	100m	4 0	9 0 Δ	150J	A1ef
65	ZD3 3A,B	xx	3.3	1.0	76m	10		175A	A1cm
66#	7708	5	3 3	1 1	100m	7 0	6 5	125A	A1bu
67	MZ1000-1	10	3 3	1 5 §	76m	15 Ø	7 0	175J	A1ay
68#	Z2A3 3	1	3 3	1.5	100m	4 0	8 0 Δ	150J	A244
69#	Z2C3.3	10	3 3	1 5	100m	4 0	8 0 Δ	150J	A244
70#	Z2D3.3	15	3 3	1 5	100m	4 0	8 0 Δ	150J	A244
71#	Z3A3.3	1	3 3	1 5	100m	4 0	8 0 Δ	150J	S4f
72#	Z3B3.3	5	3 3	1 5	100m	4.0	8 0 Δ	150J	S4f
73#	Z3B33CF	20§Ø	3 3	1 5	20m	30	7.0	175J	DO1
74#	Z3C3 3	10	3.3	1 5	100m	4.0	8.0 Δ	150J	S4f
75#	Z3D3.3	15	3 3	1 5	100m	4 0	8.0 Δ	150J	S4f
76#	Z2B3.3	5	3 3	1 6	100m	4 0	8 0 Δ	150J	A244
77#	51Z6,A	12,6	3 3	1 8	100m	25	5 0	150J	DO4
78	LMZ3 3,A,-20	xx*	3.3	2 0	151m	6 0		150A	A1kk
79	1N5008,A	xx	3 3	2 5	189m	6.0	6 6	150	A1gn
80#	3Z3 3T10,5	xx	3 3	3.0	1 0	45	5 0	165C	DO4
81♦	1N5333	20	3 3	5 0	380m			200A	A1ee
82▼	1N5333A	10	3 3	5 0	380m	3 0		200A	A1ee
83▼	1N5333B	5	3 3	5 0	380m	3.0		200A	A1ee
84▼	5ZS3 3,A,B	xxx	3 3	5 0 §	380m	3 0		200A	A1ts
85#	1302	10Ø	3 3	5 0	100m	7 0	7 0	150J	A9h
86#	10Z3 3T10,5	xx	3 3	10	3 0	.22	5.0	165C	DO4
87#	71Z6,A	12,6	3.3	25	400m	2 0	5.0	150J	S179
88	1N5673A	10	3 4	250m§	20m	25		125A	C29n
89#	1S753	xxx	3 45	25	10m	55	7 5	150	C1d
90▼#	BZ102-3V4	7	3 45	250m	5 0m	50	23	150J	DO7
91	1N4535Ø	5	3 45	50	5 0m	65 Δ		75R	DO7
92	PS6466	13	3 45	50	10m	55		200J	A1gd
93	1N373	10	3.5		10m			150A	A1er
94	1N471Ø	10	3 5	200m	5.0m	65 Δ		200A	C1
95	1N471AØ	5	3.5	200m	5.0m	65 Δ		200A	C1
96	1N471BØ	5	3 5	200m	5.0m	65 Δ		200A	C1
97	1N466	10	3.5	250m	5 0m	55 Δ		200A	C1
98	1N466A	5	3.5	250m	5.0m	55 Δ		200A	C1
99	1N466B	1	3 5	250m	5 0m	55 Δ		200A	C1
100	1N703	20	3 5	.25	5 0m	55		200A	A1cw
101	1N703A	5	3 5	250m	5 0m	55		200A	A1cw
102	GLA35,A,B	xxx	3 5	25	20m	20	5 7	175	DO7
103	MGLA35,A,B	xxx	3 5	25	20m	20	5 7	150	A2
104#	VR35F	5	3 5	2 2	20m	22		200S	DO3
105#	VR35E	5	3 5	5 8	20m	22		200S	DO4
106#	MR36E-H	15	3.6			100			DO7
107#	RZ3.6	5	3 6	08	5 0m	80 Δ		150A	C18e
108#	RZZ3 6	5	3 6	08	5 0m	90 Δ		150A	C18e
109#	AZ3 6	5	3 6	15	5 0m	100		170A	DO7
110#	BZ3.6	5	3.6	.15	5 0m	110		170A	DO7
111#	Z3.6	5	3 6	15	5 0m	80 Δ		150A	C18d
112#	ZZ3 6	5	3.6	15	5.0m	90 Δ		150A	C18d
113	1/4M3.6AZ,10,5	xxx	3 6	25	10m	50	6.0	175J	A1cy
114	1N4621	5	3 6	25	25m	1 7k		200	DO14
115	1N4685	5	3 6	25	05m			200A	DO14
116#	9971	5	3 6	25	10m	65	5 0	150J	C18f
117#	BZY85C3V6	5	3 6	25	5.0m	85		150J	DO7
118#	HS2036	5	3.6	25	5 0m			175A	DO7
119#	KS2036A	5	3 6	250m	5 0m	110	8 0 Δ	150A	DO7
120#	KS2036B	10	3.6	250m	5.0m	120	8 0 Δ	150A	DO7
121#	MR36C-H	5	3.6	.25	5 0m	95		250	DO7
122	MZ4621	Ø	3.6	250m	250u	1.7k		200J	DO7
123	PD6003,A	xx	3 6	25	10m	55		150	A109
124	PD6044	5	3 6	25	10m	44		150	A2c
125#	Z1A3 6	1	3 6	320m	5.0m	80	9 0 Δ	150A	C29
126#	Z1B3.6	5	3 6	320m	5 0m	80	9 0 Δ	150A	C29
127#	Z1C3.6	10	3.6	320m	5 0m	80	9 0 Δ	150A	C29
128#	Z1D3 6	15	3 6	320m	5 0m	80	9 0 Δ	150A	C29
129▼#	1A56	5	3 6	400m	20m	24	6 5	200J	A159
130	1N747	10	3 6	400m	20m	24	5 5	175A	A1
131	1N747A	5	3 6	400m	20m	24	5 5	175A	A1
132	JAN1N747A	5	3 6	400m	20m	22	6.5	175A	A1dd
133	1N3507	5	3.6	40	20m	22	5 5	200A	DO7
134	JAN1N4621	5	3 6	400m	250u	1 7k	6.5	175A	A1sx
135	1N5519	20	3.6	400m§	20m			175A	DO7
136	1N5519A	10	3 6	400m§	20m			175A	DO7
137	1N5519B	5	3.6	400m§	20m	24		175A	DO7
138▼	JAN1N5519B	5	3 6	400m	20m	24	6 5	200A	DO14
139	1N5519C	2	3.6	400m§	20m	24		175A	DO7
140	1N5519D	1	3 6	400m§	20m	24		175A	DO7
141#	1S2036	10	3 6	40	5 0m	120	6 0	150A	A1
142#	1S2036A	5	3 6	40	5 0m	110	6 0	150A	A1
143#	1S7036,B	x15	3 6	40	5 0m	120	6.0	150A	A1
144#	1S7036A	5	3 6	40	5 0m	95	6 0	175A	A1
145♦#	2A25Ø	10	3 6	400m	10m	80	7 0	200J	A159
146#	5509	5	3 6	.40	5 0m	80	5 5	125A	A1ce
147▼	BZX55C3V6	5	3 6	400m	5 0m	70	6.4	150A	DO35
148	BZX75C3V6*	5	3 6	400m§	10m	25	82	175J	DO7
149▼#	BZY85B3V6	2	3.6	400m	5 0m	80	6 0	150J	DO7
150#	BZY88C3V6	5	3.6	40	5 0m	76 Ø		150J	DO7
151	C6103	10	3.6	40	5 0m	50 Ø		175	M185
152	C6103A	5	3.6	.40	5 0m	50 Ø		175	M185
153	CZF3 6D,10,5	xxx	3 6	.40 Ø	250u	1 7k	5 6	175J	M452
154	CZG3 6D,10,5	xxx	3 6	40 Ø	20m	24	5 8	175J	M452
155#	HS7036	5	3 6	40	5 0m			175A	DO7
156#	KS036A	5	3 6	400m	5 0m	95	9 0 Δ	150A	DO7
157#	LR36H	5	3 6	40	5 0m	95	5 9	150S	DO7
158	M4Z3 6,A,-20	xx*	3 6	40	35m	27		150A	A1kk
159	MACZF3.6D,10,5	xxx	3 6	40 Ø	250u	1 7k	5.6	175J	M453
160	MACZG3 6D,10,5	xxx	3 6	40 Ø	20m	24	5 8	175J	M453
161	MBCZF3 6D,10,5	xxx	3 6	400mØ	250u	1 7k	5.6	175J	M454
162	MBCZG3 6D,10,5	xxx	3 6	40 Ø	20m	24	5.8	175J	M454
163	MCCZF3 6D,10,5	xxx	3 6	40 Ø	250u	1 7k	5 6	175J	M455
164	MCCZG3 6D,10,5	xxx	3 6	.40 Ø	20m	24	5.8	175J	M455
165	MDCZF3 6D,10,5	xxx	3 6	40 Ø	250u	1 7k	5 6	150A	M410
166	MDCZG3 6D,10,5	xxx	3 6	40 Ø	20m	24	5 8	150A	M410
167	MZ500-5	10	3 6	4 §	20m	25 Ø	6 5	175J	DO7
168	MZC3 6A10	†	3 6	400m§	14m	43	6 5 Δ	175J	M468
169	MZC3 6B10	§†	3 6	400m§	250u	1 7k		175J	M468
170#	Z5A3 6	1	3 6	400m§	5 0m	80	7.0 Δ	200J	A1hs
171#	Z5B3.6	5	3 6	400m§	5 0m	80	7.0 Δ	200J	A1hs
172#	Z5C3 6	10	3.6	400m§	5 0m	80	7 0 Δ	200J	A1hs
173#	Z5D3 6	15	3 6	400m§	5 0m	80	7 0 Δ	200J	A1hs
174#	ZF3.6	5	3 6	400m	5.0m	80	5 5	150J	DO7
175#	ZP3.6	5	3 6	400m	5 0m	80	5 5	150J	DO7
176	1/2Z3.6T5	5	3 6	50	20m	22		175	A94f
177	1N5227	20†	3 6	50	20m			200A	DO7
178	1N5227A,B	§Ø	3.6	.50	20m	22	6 5	200A	DO7
179	MZ92-3 6	†	3 6	500m§	20m		5.1	150J	C103
180	PS8902	5	3 6	50	20m	22	6.5	150	A60p
181	S5227,A,B	xxx	3 6	500m	20m	24		175	DO41
182#	ZSF3.6	1	3 6	500m	7 5m	10	1 0	150S	M487
183#	Z0A3 6	1	3 6	520m	5 0m	45	9 0 Δ	150J	A1ef
184#	Z0B3 6	5	3 6	520m	5 0m	45	9 0 Δ	150J	A1ef
185#	Z0C3 6	10	3 6	520m	5 0m	45	9 0 Δ	150J	A1ef
186#	Z0D3 6	15	3 6	520m	5 0m	45	9.0 Δ	150J	A1ef
187#	UZ3 6	10	3 6	60	165m	8 0	5 0	135A	DO3
188#	ZW3 6	5	3 6	600m	5 0m	80	5 5	150J	A1bg
189	MMZ3 6,A,-20	xx*	3.6	75	35m	27		150A	A1kk

SYMBOLS AND CODES EXPLAINED IN INTERPRETER

2. SILICON REFERENCE DIODES

IN ORDER OF (1) REF. VOLTAGE, (2) DISSIPATION, and (3) TYPE No.

LINE No	3 TYPE No	TOLERANCE 1 20 10 5 2 ± (%)	NOM. REF VOLT. (V)	2 MAX. DISS @ 25°C (W)	TEST CUR. Izt (A)	MAX. DYN IMP (Ω)	TEMP. COEFF Tc	MAX. TEMP (°C)	DWG. No
1	1D3.6A,B	xx	3 6	1 0	69m	10		150A	A1cn
2	1N3822	10	3.6	1 0	69m	10	6 5	175A	A31a
3	1N3822A	5	3 6	1 0	69m	10	6 5	175A	A31a
4	JAN1N3822A	5	3 6	1 0	69m	10	7 0	175A	A31c
5	1N4650	5	3 6	1 0	69m	400	7.0	200A	DO15
6	1N4729,A	xx	3 6	1 0	69m	10		200A	A1ay
7	1Z3 6,A,B	xxx	3 6	1 0	69m	10		150	A1ay
8#	1Z3 6T10,5	xx	3 6	1 §	50m	13	5 0	165A	DO3
9#	1ZC3 6T10,5	xx	3 6	1 0	50m	13	5 0	165A	A31p
10#	12Z6F,AF	12,6	3 6	1 0	10m	60		150J	DO13
11▼	BZX85C3V6	5	3 6	1 0	60m	15	6 4	150A	DO15
12	CD31-00002	5	3 6	1 0	69m	10	6 8	200A	A1ce
13	CD31-12009	5	3 6	1 0	69m	15			
14	CZ3 6	†	3 6	1 0	70m	20		175	DO15
15	G3 6T20,10,5	xxx	3.6	1 0	69m	10	6 0	175A	DO15
16#	GZ3 6	5	3 6	1 0	25m	35 △		150A	S115
17▼	HEP102-RT	10	3 6	1 0	69	11			DO41
18	LPM3 6,A,-20	xx*	3 6	1 0	69m	10		150A	A1kk
19	SZ3 6	xxxx	3 6	1 0	20m	17 ∅	5 0	150A	A3g
20#	Z2A36F	20§∅	3 6	1 0	20m	35	5 5	100J	A141
21#	Z4A3 6	1	3 6	1 0	100m	4 0	9 0 △	150J	A1ef
22#	Z4B3 6	5	3 6	1 0	100m	4 0	9 0 △	150J	A1ef
23#	Z4C3 6	10	3 6	1 0	100m	4 0	9 0 △	150J	A1ef
24#	Z4D3.6	15	3 6	1.0	100m	4 0	9 0 △	150J	A1ef
25	ZD3 6A,B	xx	3 6	1 0	69m	10		175A	A1cm
26#	7709	5	3 6	1 1	100m	7 0	5 5	125A	A1bu
27	MZ1000-2	10	3 6	1 5 §	69m	15 ∅	6 5	175J	A1ay
28#	Z2A3 6	1	3 6	1 5	100m	4 0	8 0 △	150J	A244
29#	Z2B3 6	5	3 6	1 5	100m	4 0	8 0 △	150J	A244
30#	Z2C3 6	10	3 6	1 5	100m	4 0	8.0 △	150J	A244
31#	Z2D3.6	15	3 6	1.5	100m	4 0	8 0 △	150J	A244
32#	Z3A3 6	1	3 6	1 5	100m	4 0	8 0 △	150J	S4f
33#	Z3B3 6	5	3 6	1 5	100m	4 0	8 0 △	150J	S4f
34#	Z3B36CF	20§∅	3 6	1 5	20m	25	6 0	175J	DO1
35#	Z3C3 6	10	3 6	1 5	100m	4 0	8 0 △	150J	S4f
36#	Z3D3 6	15	3 6	1 5	100m	4 0	8 0 △	150J	S4f
37#	52Z6,A	12,6	3 6	1 8	100m	25	5 0	150J	DO4
38	LMZ3 6,A,-20	xx*	3 6	2 0	139m	5 5		150A	A1kk
39	1N5009,A	xx	3 6	2 5	173m	5 5	5 8	150	A1gn
40	3TZ3 6,A,B,D	xxxx	3 6	3.0	250m	2 5		175	A1ec
41	3TZ3 6C	∅	3 6	3 0	250m	2 5		175	A1ec
42#	3Z3 6T10,5	xx	3 6	3 0	900m	45	4 5	165C	DO4
43♦	1N5334	20	3.6	5 0	350m			200A	A1ee
44▼	1N5334A	10	3 6	5 0	350m	2 5		200A	A1ee
45▼	1N5334B	5	3 6	5 0	350m	2.5		200A	A1ee
46▼	5ZS3 6,A,B	xxx	3 6	5 0 §	350m	2 5		200A	A1ts
47#	9981	5	3 6	5 0	10	7 0	5 0	150J	A9h
48#	10Z3 6T10,5	xx	3 6	10	2 7	22	4 5	165C	DO4
49#	72Z6,A	12,6	3 6	25	400m	1 9	5 0	150J	S179
50	650C0	5	3 7	15	5 0m	75	4 1	150A	C3
51	1N5674A	10	3 7	250m§	20m	25		125A	C29n
52	650C1	5	3 8	15	5 0m	75	4 0	150A	C3
53	HR3 8	5	3 8	25	5 0m	55		175A	DO7
54#	RZ3 9	5	3 9	08	5 0m	80 △		150A	C18e
55#	RZZ3 9	5	3 9	08	5 0m	90 △		150A	C18e
56	1N1981	10	3 9	150m	5 0m	11	6 0	150	C1
57	1N1981A	5	3 9	150m	5 0m	11	6 0	150	C1
58	1N1981B	1	3 9	150m	5 0m	11	6 0	150	C1
59	650C2	5	3 9	15	5 0m	75	3 9	150A	C3
60#	AZ3 9	5	3 9	15	5 0m	100		170A	DO7
61#	BZ3 9	5	3 9	15	5 0m	100		170A	DO7
62#	Z3 9∅	5	3 9	150m	5 0m	80 △		150A	C18d
63#	ZZ3 9	5	3 9	15	5 0m	90 △		150A	C18d
64	1N1927,A,B	xx1	3 9	20	5 0m	11	6 0	150A	A82e
65	1/4M3 9AZ,10,5	xxx	3 9	25	10m	50	5 0	175J	A1cy
66	1N4622	5	3 9	250m	250u	1 6k		200A	DO14
67	1N4686	5	3 9	.25	05m			200A	DO14
68#	1103	10∅	3 9	25	10m	60	5 0	150J	C18f
69#	BZY85C3V9	5	3 9	250m	5 0m	85		150J	DO7
70	GLA39,A,B	xxx	3 9	25	20m	15	4 9	175	DO7
71#	HS2039	5	3 9	25	5 0m			175A	DO7
72#	KS2039A	5	3 9	250m	5 0m	100	7 0 △	150A	DO7
73#	KS2039B	10	3 9	250m	5 0m	110	8 0 △	150A	DO7
74	MGLA39,A,B	xxx	3 9	25	20m	15	4 9	150	A2
75#	MR39C-H	5	3 9	25	5 0m	90		250	DO7
76	MZ4622	∅	3 9	250m	250u	1 6k		200J	DO7
77	PD6004,A	xx	3.9	25	10m	50		150	A109
78	PD6045	5	3 9	25	10m	42		150	A2c
79#	Z1A3 9	1	3 9	320m	5 0m	80	6 0 △	150A	C29
80#	Z1B3.9	5	3 9	320m	5 0m	80	6 0 △	150A	C29
81#	Z1C3 9	10	3 9	320m	5 0m	80	6 0 △	150A	C29
82#	Z1D3 9	15	3.9	320m	5 0m	80	6 0 △	150A	C29
83▼#	1A57	5	3 9	400m	20m	23	6 0	200J	A159
84	1N748	10	3 9	400m	20m	23	4 9	175A	A1
85	1N748A	5	3.9	400m	20m	23	4 9	175A	A1
86	JAN1N748A	5	3 9	400m	20m	20	6 0	175A	A1dd
87	1N3508	5	3.9	40	20m	20	4 9	200A	DO7
88	JAN1N4622	5	3 9	400m	250u	1 6k	6 0	175A	A1sx
89	1N5520	20	3 9	400m§	20m			175A	DO7
90	1N5520A	10	3 9	400m§	20m			175A	DO7
91	1N5520B	5	3 9	400m§	20m	22		175A	DO7
92▼	JAN1N5520B	5	3 9	400m	20m	22	6 0	200A	DO14
93	1N5520C	2	3 9	400m§	20m	22		175A	DO7
94	1N5520D	1	3 9	400m§	20m	22		175A	DO7
95#	1S2039	10	3 9	40	5.0m	110	5.0	150A	A1
96#	1S2039A	5	3 9	40	5 0m	100	5 0	150A	A1
97#	1S7039,B	x15	3.9	40	5 0m	110	5 0	150A	A1
98#	1S7039A	5	3 9	40	5 0m	100	5 0	150A	A1
99#	5510	5	3 9	40	5 0m	80	5 0	125A	A1ce
100▼	BZX55C3V9	5	3.9	400m	5 0m	70	5 6	150A	DO35
101▼#	BZY85B3V9	2	3 9	400m	5 0m	80	5 5	150J	DO7
102	BZY88C3V9	5	3.9	40	5 0m	78 ∅		150J	DO7
103	C6104	10	3 9	.40	5 0m	45 ∅		175	M185

LINE No.	3 TYPE No.	TOLERANCE 1 20 10 5 2 ± (%)	NOM. REF. VOLT. (V)	2 MAX. DISS. @ 25°C (W)	TEST CUR. Izt (A)	MAX. DYN. IMP. (Ω)	TEMP COEFF Tc	MAX. TEMP (°C)	DWG. No.
104	C6104A	5	3 9	40	5 0m	45 ∅		175	M185
105	CZF3 9D,10,5	xxx	3 9	400m∅	250u	1.6k	5 0	175J	M452
106	CZG3.9D,10,5	xxx	3.9	.40 ∅	20m	23	4 6	175J	M452
107#	HS7039	5	3 9	.40	5.0m			175A	DO7
108#	KS039A	5	3.9	400m	5 0m	90	8.0 △	150A	DO7
109#	KS039B	10	3.9	400m	5 0m	95	0 0 △	150A	DO7
110	LR39CH	5	3 9	40	5 0m	90	5.0	150S	DO7
111	M4Z3 9,A,-20	xx*	3.9	40	33m	27		150A	A1kk
112	MACZF3 9D,10,5	xxx	3.9	400m∅	250u	1.6k	5.0	175J	M453
113	MACZG3 9D,10,5	xxx	3 9	40 ∅	20m	23	4 6	175J	M453
114	MBCZF3 9D,10,5	xxx	3 9	400m∅	250u	1 6k	5 0	175J	M454
115	MBCZG3 9D,10,5	xxx	3 9	40 ∅	20m	23	4.6	175J	M454
116	MCCZG3 9D,10,5	xxx	3 9	40 ∅	20m	23	4 6	175J	M455
117	MDCZF3 9D,10,5	xxx	3 9	400m∅	250u	1 6k	5.0	150A	M410
118	MDCZG3 9D,10,5	xxx	3 9	40 ∅	20m	23	4 6	150A	M410
119	MZ500-6	10	3 9	.4 §	20m	25 ∅	6.0	175J	DO7
120	MZC3 9A10	†	3.9	400m§	13m	35	6.0 △	175J	M468
121	MZC3 9B10	§†	3 9	400m§	250u	1.6k		175J	M468
122#	Z5A3 9	1	3 9	400m§	5.0m	80	5.0 △	200J	A1hs
123#	Z5B3.9	5	3.9	400m§	5 0m	80	5.0 △	200J	A1hs
124#	Z5C3.9	10	3 9	400m§	5.0m	80	5.0 △	200J	A1hs
125#	Z5D3.9	15	3 9	400m§	5 0m	80	5.0 △	200J	A1hs
126#	ZF3.9	5	3.9	400m	5 0m	80	5.0	150J	DO7
127#	ZG3.9	10	3 9	400m	5 0m	100	5 0	150J	DO7
128#	ZP3.9	5	3.9	400m	5 0m	80	5 0	150J	DO7
129	1/2Z3 9T5	5	3.9	50	20m	21		175	A94f
130	1N3397∅	10	3.9	50	30m	20	9.0	200A	P5
131	1N5228	20†	3 9	50	20m			200A	DO7
132	1N5228A,B	§∅	3 9	50	20m	20	6 0	200A	DO7
133▼	HEPZ0208-RT	10	3 9	500m	20	40			C103
134	IDAZ3397,A,B,C∅	xxxx	3 9	500m	30m	20	9.0	200A	A1hc
135	MZ92-3.9	†	3 9	500m§	20m		3.4	150J	C103
136	PS8903	5	3 9	.50	20m	20	5 5	150	A60p
137	S5228,A,B	xxx	3 9	500m	20m	23		175	DO41
138#	ZSF3.9	1	3 9	500m	7 0m	10	1.0	150S	M487
139#	Z0A3 9	1	3 9	520m	5 0m	40	6.0 △	150J	A1ef
140#	Z0B3 9	5	3 9	520m	5.0m	40	6 0 △	150J	A1ef
141#	Z0C3 9	10	3.9	520m	5.0m	40	6.0 △	150J	A1ef
142#	Z0D3 9	15	3.9	520m	5 0m	40	6 0 △	150J	A1ef
143#	UZ3 9	10	3.9	60	150m	6 0	4 0	135A	DO3
144#	ZW3 9	5	3 9	600m	5 0m	80	5 0	150J	A1bg
145	1N1507	10	3 9	75	35m	15	4 0	200S	DO12
146	1N1507A	5	3 9	75	35m	15	4.0	200S	DO12
147	MMZ3.9,A,-20	xx*	3 9	75	33m	27		150A	A1kk
148	MZ3.9T20,10,5	xxx	3.9	75	35m	30	4 0	165A	A152
149	1D3 9A,B	xx	3.9	1 0	64m	9 0		150A	A1cn
150	1N1518	10	3 9	1 0	50m	10	4 0	200S	DO3
151	1N1518A	5	3 9	1 0	50m	10	4 0	200S	DO3
152	1N3823	10	3 9	1 0	64m	9 0	5.5	175A	A31a
153	1N3823A	5	3 9	1 0	64m	9 0	5 5	175A	A31a
154	JAN1N3823A	5	3 9	1 0	64m	9 0	6.0	175A	A31c
155	1N4651	5	3.9	1 0	64m	400	6 0	200A	DO15
156	1N4730,A	xx	3 9	1 0	64m	9 0		200A	A1ay
157	1Z3.9,A,B	xxx	3 9	1 0	64m	9 0		150	A1ay
158	1Z3 9T20,10,5	xxx	3 9	1 0	50m	20	4.0	165A	A89c
159#	1ZC3.9T10,5	xx	3 9	1 0	50m	12	4 0	165A	A31p
160#	13Z6F,AF	12,6	3.9	1.0	10m	60		150J	DO13
161▼	BZX85C3V9	5	3 9	1 0	60m	15	5 6	150A	DO15
162	CD31-00003	5	3.9	1 0	64m	9 0	5 0	200A	A1ce
163	CD31-12010	5	3 9	1 0	64m	12			
164	CZ3.9	†	3 9	1 0	60m	15		175	DO15
165	G3 9T20,10,5	xxx	3 9	1 0	64m	9 0	5 0	175A	DO15
166#	GZ3 9	5	3.9	1.0	25m	35 △		150A	S115
167	JZ3 9	†	3 9	1 0	64m	9 0	5 5	175	DO15
168	LPM3 9,A,-20	xx*	3.9	1 0	64m	9.0		150A	A1kk
169	SZ3.9	xxxx	3.9	1.0	20m	17 ∅	4 5	150A	A3g
170#	Z2A39F	20§∅	3 9	1 0	20m	33	5.0	100J	A141
171	Z3.9△	†	3.9	1 0	64m	9.0	5 5	175	DO27
172#	Z4A3.9	1	3 9	1 0	100m	4 0	6.0 △	150J	A1ef
173#	Z4B3 9	5	3 9	1 0	100m	4.0	6 0 △	150J	A1ef
174#	Z4C3 9	10	3.9	1 0	100m	4 0	6 0 △	150J	A1ef
175#	Z4D3 9	15	3 9	1 0	100m	4 0	6 0 △	150J	A1ef
176	ZD3 9A,B	xx	3 9	1 0	64m	9 0		175A	A1cm
177#	ZEC3 9	20	3 9	1 0	50m	12	40	165A	DO3
178	ZM3 9△	†	3.9	1 0	64	9 0	5 5	175	DO41
179#	7710	5	3 9	1 1	100m	7 0	5.0	125A	A1bu
180#	BZY92C3V9	5	3 9	1 1	100m	7 0	2.0	150	DO13
181#	ZD3.9	5	3 9	1 3	100	7 0	2 0	150J	DO13
182	ZM3 9∅	10	3.9	1 3	100	7 0	2 0	150J	DO13
183#	ZU3 9	10	3.9	1 3	100	7 0	2 0	150J	A1bg
184#	ZY3 9	5	3.9	1 3	100	7 0	2 0	150J	A1bg
185	MZ1000-3	10	3 9	1 5 §	64m	14 ∅	6 0	175J	A1ay
186#	Z2A3 9	1	3.9	1 5	100m	4 0	8.0 △	150J	A244
187#	Z2B3 9	5	3.9	1 5	100m	4.0	8.0 △	150J	A244
188#	Z2C3.9	10	3.9	1 5	100m	4 0	8.0 △	150J	A244
189#	Z2D3.9	15	3.9	1 5	100m	4 0	8.0 △	150J	A244
190#	Z3A3 9	1	3.9	1 5	100m	4 0	8.0 △	150J	S4f
191#	Z3B3.9	5	3.9	1 5	100m	4.0	8 0 △	150J	S4f
192#	Z3B39CF	20§∅	3 9	1 5	20m	22	4.0	175J	DO1
193#	Z3C3.9	10	3.9	1 5	100m	4.0	8 0 △	150J	S4f
194#	Z3D3 9	15	3.9	1 5	100m	4 0	8 0 △	150J	S4f
195#	53Z6,A	12,6	3 9	1 8	100m	25	5 0	150J	DO4

SYMBOLS AND CODES EXPLAINED IN INTERPRETER

2. SILICON REFERENCE DIODES

IN ORDER OF (1) REF. VOLTAGE, (2) DISSIPATION, and (3) TYPE No.

LINE No	TYPE No.	TOLERANCE 3 (20 10 5 2) ± (%)	NOM. REF. VOLT. (V)	2 MAX DISS. @ 25°C (W)	TEST CUR Izt (A)	MAX. DYN. IMP (Ω)	TEMP. COEFF Tc	MAX. TEMP (°C)	DWG. No.
1	LMZ3 9,A,-20	xx*	3 9	2 0	128m	5 0		150A	A1kk
2	1N5010,A	xx	3 9	2 5	160m	5 0	4 6	150	A1gn
3	3TZ3.9,A,B,D	xxxx	3 9	3 0	250m	2 5		175	A1ec
4	3TZ3 9C	∅	3 9	3 0	250m	2 5		175	A1ec
5	1N1588,A	xx	3 9	3 5	150m	4 5	4 0	200S	DO4
6	3Z3 9T20,10,5	xxx	3 9	3 5	150m	9 0	4 0	165A	DO4
7♦	1N5335	20	3 9	5 0	320m			200A	A1ee
8▼	1N5335A	10	3 9	5 0	320m	2 0		200A	A1ee
9▼	1N5335B	5	3 9	5 0	320m	2.0		200A	A1ee
10▼	5ZS3 9.A,B	xxx	3 9	5 0 §	320m	2 0		200A	A1ts
11#	1303	10∅	3 9	5.0	100m	7 0	5 0	150J	A9h
12	1N1599,A	xx	3 9	10	500m	1 5	4 0	200S	DO4
13	1N3993,A	xx	3 9	10	640m	2 0		175S	DO4
14	JAN1N3993A,RA	5	3 9	10 §	64	2 0	6 0	150A	DO4
15	10Z3 9T20,10,5	xxx	3 9	10	500m	3 0	4 0	165	DO4
16	75TE3 9,A	xx	3 9	12	2 6	6 0m	4 0	125C	TO36
17#	1203	10∅	3.9	15	500m	2 0	5 0	150J	S87
18#	73Z6,A	12,6	3 9	25	400m	1 8	5 0	150J	S179
19#	ZL3 9	10	3 9	25 ∅	100	7 0	2 0	150J	M41
20#	ZX3 9	5	3 9	25 ∅	100	7 0	2 0	150J	M41
21	1N4549,A,B	xxx	3 9	50	3 2	16	4 6	175J	DO5
22	JAN1N4549B,RB	5	3 9	50	3 2	16	4 6	150	DO5
23	1N4557,A,B	xxx	3 9	50	3.2	16	4 6	175J	C5a
24	80TF3 9,A	xx	3 9	80	2 6	6 0m	4 0	125C	M117c
25	1N1954,A,B	xx1	3.95	40	5 0m	11	6 0	150	DO7
26	650C3	5	4 0	15	5.0m	74	3 9	150A	C3
27#	RD4A	10	4.0	200m	10m	60	5 5	150S	A1kk
28#	SZ200-4	15	4.0	20	10m	80		100A	A138
29#	1S994	15	4 0	25	10m	60	4 0	150J	A1ce
30	C5004	10	4 0	25	10m	70	1 0	75	DO7
31#	MZ1004	15	4 0	250m	10m	55	5 0	175J	DO7
32	Z3434	10	4 0	25	10m	130	1 0	150A	A1gt
33	1N374	10	4 1		5 0m	20		150A	A1er
34	1N375	5	4 1		5 0m	17		150A	A1er
35	650	10	4 1	15	5 0m	73	4 2	150A	C3
36	650C4	5	4 1	15	5 0m	73	3 8	150A	C3
37	1N472∅	10	4 1	200m	5 0m	60 △		200A	C1
38	1N472A∅	5	4 1	200m	5 0m	60 △		200A	C1
39	1N472B∅	1	4 1	200m	5 0m	60 △		200A	C1
40	IDAZ472,A,B,C∅	xxxx	4 1	200m	5.0m	60 △		200A	A1hc
41	1N467	10	4 1	250m	5 0m	45 △		200A	C1
42	1N467A	5	4 1	250m	5.0m	45 △		200A	C1
43	1N467B	1	4 1	250m	5 0m	45 △		200A	C1
44	1N704	20	4 1	25	5 0m	45		200A	A1cw
45	1N5675A	10	4 1	250m§	20m	25		125A	C29n
46	650C5	5	4 2	15	5 0m	71	3 6	150A	C3
47♦#	2A47∅	10	4 2	400m	10m	80	7 0	200J	A159
48#	1S754	xxx	4 25	25	10m	45	5 5	150	C1d
49#	VR425F	5	4 25	2 2	20m	19		200S	DO3
50#	VR425E	5	4 25	5 8	20m	19		200S	DO4
51#	MR43E-H	15	4 3			90			DO7
52#	RZ4 3	5	4 3	08	5 0m	80 △		150A	C18e
53#	RZZ4 3	5	4 3	08	5 0m	90 △		150A	C18e
54	650C6	5	4 3	15	5 0m	70	3 4	150A	C3
55#	AZ4 3	5	4 3	15	5 0m	100		170A	DO7
56#	BZ4 3	5	4 3	15	5 0m	90		170A	DO7
57#	Z4 3∅	5	4 3	150m	5 0m	80 △		150A	C18d
58#	ZZ4 3	5	4 3	15	5 0m	90 △		150A	C18d
59#	OAZ268	20	4 3	23	1 0m	375		150J	A3
60	1/4M4 3AZ,10,5	xxx	4 3	25	10m	45	4 0	175J	A1cy
61	1N4623	5	4 3	25	25m	1 6k		200	DO14
62	1N4687	5	4 3	25	05m			200A	DO14
63#	9972	5	4 3	25	10m	55	2 0	150J	C18f
64#	BZY85C4V3	5	4 3	25	5 0m	80		150J	DO7
65	GLA43,A,B	xxx	4 3	25	20m	12	3 6	175	DO7
66#	HS2043	5	4 3	25	5 0m			175A	DO7
67#	KS2043A	5	4 3	250m	5 0m	90	6 0 △	150A	DO7
68#	KS2043B	10	4 3	250m	5 0m	100	7 0 △	150A	DO7
69	LAC2001	10	4 3	250m	20m	12			M520a
70	MGLA43,A,B	xxx	4 3	25	20m	12	3 6	150	A2
71#	MR43C-H	5	4 3	25	5 0m	85		250	DO7
72	MZ4623	∅	4 3	250m	250u	1 6k		200J	DO7
73	PD6005,A	xx	4 3	.25	10m	50		150	A109
74	PD6046	5	4 3	.25	10m	38		150	A2c
75	PD6201	10	4 3	250m	2 0m	12			A109
76#	BZY64	15	4 3	28	1 0m	375		150J	A3
77	OAZ208	15	4 3	30	1 0m	370 ∅	4 6	150J	C1c
78#	Z1A4 3	1	4.3	320m	5 0m	75	6 0 △	150A	C29
79#	Z1B4 3	5	4 3	320m	5 0m	75	6 0 △	150A	C29
80#	Z1C4.3	10	4 3	320m	5 0m	75	6 0 △	150A	C29
81#	Z1D4.3	15	4 3	320m	5.0m	75	6 0 △	150A	C29
82	LDZ70/4A3	5	4.3	360m	20m	22		150J	M401
83▼#	1A58	5	4.3	400m	20m	22	5 5	200J	A159
84	1N749	10	4 3	400m	20m	27	3 6	175A	A1
85	1N749A	5	4.3	400m	20m	27	3 6	175A	A1
86	JAN1N749A	5	4 3	400m	20m	18	5 5	175A	A1dd
87	1N3509	5	4.3	40	20m	18	3 6	200A	DO7
88	JAN1N4623	5	4.3	400m	250u	1 6k	5 0	175A	A1sx
89	1N5521	20	4.3	400m§	20m			175A	DO7
90	1N5521A	10	4.3	400m§	20m			175A	DO7
91	1N5521B	5	4.3	400m§	20m	18		175A	DO7
92▼	JAN1N5521B	5	4.3	400m	20m	18	5 5	200A	DO14
93	1N5521C	2	4 3	400m§	20m	18		175A	DO7
94	1N5521D	1	4.3	400m§	20m	18		175A	DO7
95#	1S2043	10	4 3	40	5 0m	100	4 0	150A	A1
96#	1S2043A	5	4 3	.40	5.0m	90	4.0	150A	A1
97#	1S7043,B	x15	4.3	40	5.0m	100	4.0	150A	A1
98#	1S7043A	5	4 3	40	5 0m	90	4 0	150A	A1
99#	5511	5	4 3	40	5 0m	75	3 5	125A	A1ce
100▼	BZX55C4V3	5	4 3	400m	5 0m	65	4 4	150A	DO35
101▼#	BZY85B4V3	2	4 3	400m	5.0m	75	4 5	150J	DO7
102#	BZY88C4V3	5	4.3	40	5 0m	70 ∅		150J	DO7
103	C6105	10	4 3	40	5.0m	40 ∅		175	M185
104	C6105A	5	4.3	40	5 0m	40 ∅		175	M185
105	CZF4 3D,10,5	xxx	4.3	.40 ∅	250u	1 6k	4 1	175J	M452
106	CZG4 3D,10,5	xxx	4 3	.40 ∅	20m	22	3.3	175J	M452
107#	HS7043	5	4 3	40	5 0m			175A	DO7
108#	KS043A	5	4 3	400m	5 0m	85	7 0 △	150A	DO7
109#	LR43CH	5	4 3	40	5 0m	85	4.0	150S	DO7
110	M4Z4.3,A,-20	xx*	4 3	40	40m	27		150A	A1kk
111	MACZF4 3D,10,5	xxx	4 3	40 ∅	250u	1 6k	4 1	175J	M453
112	MACZG4 3D,10,5	xxx	4 3	.40 ∅	20m	22	3 3	175J	M453
113	MBCZF4.3D,10,5	xxx	4 3	400m∅	250u	1 6k	4 1	175J	M454
114	MBCZG4 3D,10,5	xxx	4 3	.40 ∅	20m	22	3 3	175J	M454
115	MCCZF4.3D,10,5	xxx	4 3	40 ∅	250u	1 6k	4 1	175J	M455
116	MCCZG4 3D,10,5	xxx	4 3	40 ∅	20m	22	3 3	175J	M455
117	MDCZF4 3D,10,5	xxx	4 3	40 ∅	250u	1 6k	4 1	150A	M410
118	MDCZG4.3D,10,5	xxx	4 3	.40 ∅	20m	22	3.3	150A	M410
119	MZ500-7	10	4 3	40 §	20m	25 ∅	5 0	175J	DO7
120	MZC4 3A10	†	4 3	400m§	12m	29	5.5 △	175J	M468
121	MZC4 3B10	§†	4 3	400m§	250u	1 6k		175J	M468
122#	Z5A4 3	1	4 3	400m§	5.0m	75	5 0 △	200J	A1hs
123#	Z5B4 3	5	4 3	400m§	5 0m	75	5 0 △	200J	A1hs
124#	Z5C4.3	10	4 3	400m§	5 0m	75	5.0 △	200J	A1hs
125#	Z5D4 3	15	4 3	400m§	5 0m	75	5 0 △	200J	A1hs
126#	ZF4 3	5	4 3	400m	5 0m	75	4 0	150J	DO7
127#	ZP4 3	5	4 3	400m	5 0m	75	3 5	150J	DO7
128	1/2Z4 3T5	5	4 3	50	20m	20		175	A94f
129	1N5229	20†	4 3	50	20m			200A	DO7
130	1N5229A,B	xx	4 3	50	20m	18	5.5	200A	DO7
131	MZ92-4 3	†	4 3	500m§	20m		1 0	150J	C103
132	PS8904	5	4 3	50	20m	18	4 0	150	A60p
133	S5229,A,B	xxx	4 3	500m	20m	22		175	DO41
134#	ZSF4 3	1	4 3	500m	7 0m	10	1 0	150S	M487
135#	ZOA4 3	1	4 3	520m	5 0m	35	6 0 △	150J	A1ef
136#	ZOB4 3	5	4 3	520m	5.0m	35	6 0 △	150J	A1ef
137#	ZOC4 3	10	4 3	520m	5 0m	35	6 0 △	150J	A1ef
138#	ZOD4 3	15	4 3	520m	5 0m	35	6 0 △	150J	A1ef
139	LVA43A	5	4 3	600m	20m	12			DO14
140	LVA43B	2	4 3	600m	20m	12			DO14
141	LVA343A	5	4 3	600m	20m	12			DO14
142	LVA343B	2	4 3	600m	20m	12			DO14
143#	UZ4.3	10	4 3	60	140m	5 0	2 0	135A	DO3
144#	ZW4 3	5	4 3	600m	5 0m	75	4 0	150J	A1bg
145	MMZ4 3,A,-20	xx*	4 3	75	30m	27		150A	A1kk
146	MZ4 3T20,10,5	xxx	4 3	.75	35m	25	4 0	165A	A152
147	1D4 3A,B	xx	4 3	1 0	58m	9 0		150A	A1cn
148	1N3824	10	4 3	1 0	58m	9 0	4.0	175A	A31a
149	1N3824A	5	4.3	1 0	58m	9 0	4.0	175A	A31a
150	JAN1N3824A	5	4 3	1 0	58m	9 0	5 0	175A	A31c
151	1N4177	20	4 3	1 0	6 0m	70	9 0	175	DO29
152	1N4177A	10	4 3	1 0	6 0m	70	9 0	175	DO29
153	1N4177B	5	4 3	1 0	6 0m	70	9 0	175	DO29
154	1N4652	5	4 3	1 0	58m	400	5 0	200A	DO15
155	1N4731,A	xx	4 3	1 0	58m	9 0		200A	A1ay
156	1Z4 3,A,B	xxx	4 3	1 0	58m	9 0		150	A1ay
157	1Z4 3T20,10,5	xxx	4 3	1 0	50m	20	4 0	165A	A89c
158#	1ZC4 3T10,5	xx	4 3	1 0	50m	12	2.0	165A	A31p
159#	14Z6F,AF	12,6	4 3	1 0	10m	60		150J	DO13
160▼	BZX85C4V3	5	4 3	1 0	50m	12	4 4	150A	DO15
161	CD31-00004	5	4 3	1 0	58m	9 0	3.0	200A	A1ce
162	CD31-12011	5	4.3	1.0	58m	12			
163	CZ4 3	†	4 3	1 0	60m	15		175	DO15
164	G4 3T20,10,5	xxx	4 3	1 0	58m	9 0	4.0	175A	DO15
165#	GZ4.3	5	4 3	1 0	25m	35 △		150A	S115
166	JZ4.3	†	4 3	1 0	58m	9 0	4.0	175	DO15
167	LPM4 3,A,-20	xx*	4 3	1 0	58m	9 0		150A	A1kk
168	SZ4 3	xxxx	4 3	1 0	20m	17 ∅	3 7	150A	A3g
169#	Z2A43F	xxx	4 3	1 0	20m	31	4 0	100J	A141
170#	Z4A4 3	1	4 3	1 0	100m	4 0	6 0 △	150J	A1ef
171#	Z4B4 3	5	4 3	1 0	100m	4 0	6 0 △	150J	A1ef
172#	Z4C4 3	10	4 3	1 0	100m	4 0	6 0 △	150J	A1ef
173#	Z4D4.3	15	4 3	1 0	100m	4 0	6.0 △	150J	A1ef
174	Z4 3△	†	4 3	1 0	58m	9 0	4.0	175	DO27
175	ZD4.3A,B	xx	4 3	1 0	58m	9 0		175A	A1cm
176	ZM4 3	†	4 3	1 0	58	9 0	4 0	175	DO41
177#	7711	5	4.3	1 1	100m	7.0	3 5	125A	A1ef
178#	BZY92C4V3	5	4 3	1 1	100m	7.0	2 5	150J	DO13
179#	ZD4.3	5	4.3	1 3	100	7 0	2 0	150J	DO13
180#	ZY4 3	5	4 3	1 3	100	7 0	2 0	150J	A1bg
181	MZ1000-4	10	4 3	1 5 §	58m	14 ∅	5 0	175J	A1ay
182#	Z2A4 3	1	4 3	1 5	100m	4.0	8 0 △	150J	A244
183#	Z2B4.3	5	4.3	1 5	100m	4 0	8 0 △	150J	A244
184#	Z2C4.3	10	4.3	1 5	100m	4.0	8.0 △	150J	A244
185#	Z2D4 3	15	4.3	1 5	100m	4.0	8 0 △	150J	A244
186#	Z3A4.3	1	4.3	1 5	100m	4.0	8 0 △	150J	S4f
187#	Z3B4.3	5	4 3	1 5	100m	4 0	8.0 △	150J	S4f
188#	Z3B43CF	xxx	4 3	1 5	20m	19	2.0	175J	DO1
189#	Z3C4.3	10	4.3	1 5	100m	4 0	8.0 △	150J	S4f
190#	Z3D4.3	15	4.3	1.5	100m	4 0	8.0 △	150J	S4f
191#	54Z6,A	12,6	4.3	1 8	100m	25	5.0	150J	DO4
192	LMZ4 3,A,-20	xx*	4.3	2 0	116m	5 0		150A	A1kk
193	1N5011,A	xx	4.3	2 5	145m	4 0	3 3	150	A1gn

SYMBOLS AND CODES EXPLAINED IN INTERPRETER

2. SILICON REFERENCE DIODES

IN ORDER OF (1) REF. VOLTAGE, (2) DISSIPATION, and (3) TYPE No.

LINE No	TYPE No	TOLERANCE 1 (3) 20 10 5 2 ± (%)	NOM. REF. VOLT. (V)	2 MAX. DISS. @ 25°C (W)	TEST CUR. Izt (A)	MAX. DYN. IMP. (Ω)	TEMP. COEFF Tc	MAX. TEMP (°C)	DWG. No.
1	3TZ4 3,A,B,D	xxxx	4 3	3 0	250m	2 5		175	A1ec
2	3TZ4.3C	∅	4 3	3.0	250m	2 5		175	A1ec
3	3Z4 3T20,10,5	xxx	4 3	3 5	150m	7 5	4 0	165A	DO4
4♦	1N5336	20	4 3	5 0	290m			200A	A1ee
5▼	1N5336A	10	4 3	5 0	290m	2.0		200A	A1ee
6▼	1N5336B	5	4 3	5 0	290m	2 0		200A	A1ee
7▼	5ZS4.3,A,B	xxx	4.3	5 0 §	290m	2 0		200A	A1ts
8#	9982	5	4 3	5 0	10	7 0	2 0	150J	A9h
9	1N3994,A	xx	4 3	10	580m	1 5		175S	DO4
10	JAN1N3994A,RA	5	4 3	10 §	58	1 5	5 0	150A	DO4
11	10Z4.3T20,10,5	xxx	4 3	10	500m	2.2	4 0	165	DO4
12#	9992	5	4 3	15	50	2 0	2 0	150J	S87
13#	74Z6,A	12,6	4 3	25	400m	1 5	5 0	150J	S179
14#	ZX4 3	5	4 3	25 ∅	100	7 0	2.0	150J	M41
15	1N4550,A,B	xxx	4 3	50	2 9	16	3 3	175J	DO5
16	JAN1N4550B,RB	5	4 3	50	2 9	16	3 3	150	DO5
17	1N4558,A,B	xxx	4 3	50	2 9	16	3 3	175J	C5a
18	650C7	5	4 4	15	5 0m	68	3 2	150A	C3
19	1N704A	5	4 4	25	5 0m	45	·	200A	A1cw
20	HR4 4	5	4 4	25	5 0m	45		175A	DO7
21♦#	2A18∅	10	4 4	400m	10m	80	7 0	200J	A159
22	SV121	5	4.48	25	10m	55 ∅	2 0	150	DO7
23	1N2041A	5	4 5		1 0	1 0		150A	S19a
24	651C0	5	4 5	15	5 0m	67	3 0	150A	C3
25	1N761-1	5	4 5	25	10m	40	0.0	150	DO7
26	1N5676A	10	4 5	250m§	20m	25		125A	C29n
27	PS6467	13	4 5	50	10m	45		200J	A1gd
28	1N2032A	5	4 5	75	10m	55	2 0	150J	DO12
29	SV1004	5	4 5	75	10m	55 ∅	2.0	150	A82f
30	WZ904	5	4 5	75	10m	55 ∅		150A	A1ep
31#	1S220	10	4 5	1 0	50m	17		150J	A56a
32	1N2041-1	5	4 5	10	1 0	1 0	2 0	150J	DO4
33#	1S262	10	4 5	10	500m	2 5		150J	S19g
34	STB7*	10	4.55		10m			175A	A1bs
35	651C1	5	4 6	15	5 0m	66	2.9	150A	C3
36#	RZ4 7	5	4 7	80m	5 0m	80 △		150A	C18e
37#	RZZ4 7	5	4 7	80m	5 0m	90 △		150A	C18e
38▼#	BZX84C4V7	5	4 7	110m	5 0m	80	2 9	125J	M500
39	1N1982	10	4 7	150m	5 0m	10	5.0	150	C1
40	1N1982A	5	4 7	150m	5.0m	10	5 0	150	C1
41	1N1982B	1	4 7	150m	5.0m	10	5 0	150	C1
42	651C2	5	4 7	15	5 0m	63	2.2	150A	C3
43#	AZ4 7	5	4 7	15	5 0m	100		170A	DO7
44#	BZ4 7	5	4 7	15	5 0m	80		170A	DO7
45#	LZ4 7	10	4 7	15	5 0m	100		170A	DO7
46#	Z4.7∅	5	4 7	150m	5 0m	80 △		150A	C18d
47#	ZZ4 7∅	5	4 7	15	5 0m	90 △		150A	C18d
48	1N1928,A,B	xx1	4 7	.20	5 0m	10	5 0	150A	A82e
49	1/4M4 7AZ,10,5	xxx	4 7	25	10m	35	2 0	175J	A1cy
50	1N4624	5	4.7	25	250u	1 5k		200	DO14
51	1N4688	5	4 7	25	50u			200A	DO14
52#	1104△	10∅	4 7	25	10m	45	2 0	150J	C18f
53#	BZY83C4V7	5	4 7	25	5 0m	90	1.0 △	150J	C1g
54#	BZY83D4V7	10	4.7	25	5 0m	90		150J	C1g
55#	BZY85C4V7	5	4 7	25 §	5 0m	70	1 0 △	150J	A171f
56	GLA47,A,B	xxx	4.7	25	10m	10	1.8	175	DO7
57#	HS2047	5	4 7	.25	5 0m			175A	DO7
58#	KS2047A	5	4 7	250m	5 0m	85	5 0 △	150A	DO7
59#	KS2047B	10	4 7	250m	5 0m	90	6 0 △	150A	DO7
60	LAC2002	10	4 7	250m	10m	15			M520a
61	MGLA47,A,B	xxx	4 7	25	10m	10	1 8	150	A2
62#	MR47C-H	5	4 7	25	5 0m	80		250	DO7
63	MZ4624	∅	4 7	250m	250u	1 5k		200J	DO7
64	PD6006,A	xx	4 7	25	10m	45		150	A109
65	PD6047	5	4 7	25	10m	32		150	A2c
66	PD6202	10	4 7	250m	10m	15			A109
67#	OAZ240	5	4 7	278m	1.0m	370 ∅	20	150J	A24c
68#	BZY56	5	4 7	28	1 0m	370		150J	A3
69	OAZ200	5	4 7	30	1 0m	420	4 2	150J	C1c
70#	Z1D4 7	∅∅§§	4.7	.30 §		75		150J	C29
71#	Z1A4 7	1	4 7	320m	5 0m	70	6 0 △	150A	C29
72#	Z1B4 7	5	4 7	320m	5 0m	70	6 0 △	150A	C29
73#	Z1C4 7	10	4 7	320m	5 0m	70	6 0 △	150A	C29
74	LDZ70/4A7	5	4.7	360m	20m	19		150J	M401
75▼#	1A59	5	4 7	400m	20m	19	4 3	200J	A159
76	1N674	5	4 7	40	20m	16	3 0	200S	A31b
77#	1N750	10	4 7	400m	20m	19	1 8	175A	A1
78#	1N750A	5	4 7	400m	20m	19	1 8	175A	A1
79	JAN1N750A	5	4 7	400m	20m	16	4 3	175A	A1dd
80	1N1955,A,B	xx1	4 7	40	5 0m	10	5 0	150	DO7
81	1N3510	5	4 7	40	20m	16	1.8	200A	DO7
82	JAN1N4624	5	4 7	400m	250u	1 5k	4 0 △	175A	A1sx
83	1N5522	20	4 7	400m§	10m			175A	DO7
84	1N5522A	10	4 7	400m§	10m			175A	DO7
85	1N5522B	5	4.7	400m§	10m	22		175A	DO7
86▼	JAN1N5522B	5	4 7	400m	10m	22	4 3	200A	DO14
87	1N5522C	2	4 7	400m§	10m	22		175A	DO7
88	1N5522D	1	4.7	400m§	10m	22		175A	DO7
89#	1S2047	10	4 7	40	5 0m	90	2 5	150A	A1
90#	1S2047A	5	4 7	40	5 0m	85	2.5	150A	A1
91#	1S7047,B	§§	4 7	40	5 0m	90	2 5	150A	A1
92#	1S7047A	5	4.7	40	5 0m	85	2 5	150A	A1
93#	5512	5	4 7	40	5.0m	70	2 0	125A	A1ce
94#	BZX46C4V7	5	4 7	400m	20m	19	2 0	175J	DO35
95#	BZX55C4V7	5	4 7	400m	5 0m	60	2 0	150J	DO35
96#	BZX79C4V7	5	4.7	400m	5.0m	80	14	200J	DO35
97#	BZX83C4V7	5	4 7	400m	5.0m	80	2 0	150J	DO35
98▼#	BZY85B4V7	2	4 7	400m	5.0m	70	3.5	150J	DO7
99#	BZY85D4V7	10	4 7	400m	5.0m	80	4 0	150J	A1su
100#	BZY88C4V7	5	4 7	40	5.0m	62 ∅		150	DO7
101	C6106	10	4 7	.40	5.0m	30 ∅		175	M185
102	C6106A	5	4 7	40	5.0m	30 ∅		175	M185
103	CZF4 7D,10,5	xxx	4.7	400m∅	250u	1 5k	3 5	175J	M452
104	CZG4 7D,10,5	xxx	4.7	40 ∅	20m	19	1.5	175J	M452
105#	HS7047	5	4.7	.40	5.0m			175A	DO7
106#	KS047A	5	4 7	.40	5.0m	80	8 0 △	150A	DO7
107#	KS047B	10	4.7	400m	5 0m	85	3 0 △	150A	DO7
108	LR47CH	5	4 7	40	5.0m	80	2 7	150S	DO7
109	M4Z4 7,A,-20	xx*	4.7	40	27m	27		150A	A1kk
110	MACZF4 7D,10,5	xxx	4.7	400m∅	250u	1.5k	3 5	175J	M453
111	MACZG4 7D,10,5	xxx	4.7	.40 ∅	20m	19	1.5	175J	M453
112	MBCZF4.7D,10,5	xxx	4 7	400m∅	250u	1 5k	3.5	175J	M454
113	MBCZG4 7D,10,5	xxx	4.7	40 ∅	20m	19	1 5	175J	M454
114	MCCZF4.7D,10,5	xxx	4.7	400m∅	250u	1.5k	3 5	175J	M455
115	MCCZG4.7D,10,5	xxx	4 7	40 ∅	20m	19	1 5	175J	M455
116	MDCZF4.7D,10,5	xxx	4 7	400m∅	250u	1 5	3 5	150A	M410
117	MDCZG4 7D,10,5	xxx	4.7	.40 ∅	20m	19	1.5	150A	M410
118	MZ500-8	10	4 7	.40 §	20m	20 ∅	4 3	175J	DO7
119	MZC4.7A10	†	4 7	400m§	11m	24	3 0 △	175J	M468
120	MZC4.7B10	§†	4 7	400m§	250u	1.5k		175J	M468
121#	Z5A4.7	1	4 7	400m§	5.0m	70	5.0 △	200J	A1hs
122#	Z5B4 7	5	4 7	400m§	5 0m	70	5.0 △	200J	A1hs
123#	Z5C4 7	10	4 7	400m§	5.0m	70	5 0 △	200J	A1hs
124#	Z5D4.7	15	4 7	400m§	5.0m	70	5 0 △	200J	A1hs
125#	ZF4 7	5	4 7	400m	5.0m	70	2.0	150J	DO7
126#	ZG4.7	10	4.7	400m	5.0m	90	3 0	150J	DO7
127#	ZP4 7	5	4 7	400m	5 0m	70	1 5	150J	DO7
128	1/2Z4.7T5	5	4 7	50	20m	18		175	A94f
129	1N3398∅	10	4 7	.50	30m	20	8.0	200A	P5
130	1N5230	20†	4 7	.50	20m			200A	DO7
131	1N5230A,B	xx	4 7	50	20m	16	3 0	200A	DO7
132▼	HEPZ0210-RT	10	4 7	500m	20	19			C103
133	IDAZ3398,A,B,C∅	xxxx	4 7	500m	30m	20	8 0	200A	A1hc
134	MZ92-4 7	†	4 7	500m§	20m		1 2	150J	C103
135	PS8905	5	4 7	50	20m	16	01	150	A60p
136	S5230,A,B	xxx	4.7	500m	20m	19	3.0	175	DO41
137#	Z0D4 7	15	4 7	50	95m	35	0 0	150J	A1ef
138#	ZSF4 7	1	4 7	500m	7 0m	10	1 0	150S	M487
139#	Z0A4.7	1	4 7	520m	5.0m	30	6 0 △	150J	A1ef
140#	Z0B4 7	5	4 7	520m	5 0m	30	6.0 △	150J	A1ef
141#	Z0C4 7	10	4 7	520m	5 0m	30	6 0 △	150J	A1ef
142	LVA47A	5	4 7	600m	10m	15			DO14
143	LVA47B	2	4 7	600m	10m	15			DO14
144	LVA347A	5	4 7	600m	10m	10			DO14
145	LVA347B	2	4 7	600m	10m	10			DO14
146#	UZ4.7	10	4.7	.60	128m	5 0		135A	DO3
147#	ZW4.7	5	4 7	600m	5 0m	70	2 0	150J	A1bg
148	ZZ4 7△	10	4 7	.60	25m	18	1 0	175A	M222
149	1N1508	10	4.7	.75	30m	13	0.0	200S	DO12
150	1N1508A	5	4.7	75	30m	13	0.0	200S	DO12
151	MMZ4 7,A,-20	xx*	4 7	75	27m	27		150A	A1kk
152	MZ4 7T20,10,5	xxx	4.7	.75	30m	20	4 0	165A	A152
153	1D4.7A,B	xx	4 7	1 0	53m	8.0		150A	A1cn
154	1N1484	5	4 7	1 0	50m	5 0 ∅	4 0	200A	A154
155	1N1519,A	xx	4.7	1.0	40m	13	0 0	200S	DO3
156	1N3825	10	4 7	1.0	53m	8.0	2 0	175A	A31a
157	1N3825A	5	4.7	1.0	53m	8 0	2.0	175A	A31a
158	JAN1N3825A	5	4.7	1.0	53m	8 0	2 5	175A	A31c
159	1N4653	5	4.7	1.0	53m	500	2 5	200A	DO15
160	1N4732,A	xx	4 7	1 0	53m	8 0		200A	A1ay
161	1Z4 7,A,B	xxx	4.7	1.0	53m	8.0		150	A1ay
162	1Z4 7T20,10,5	xxx	4.7	1 0	40m	20	4 0	165A	A89c
163#	1ZC4.7T10,5	xx	4 7	1 0	40m	11		165A	A31p
164#	15Z6F,AF	12,6	4 7	1.0	10m	60		150J	DO13
165#	BZX29C4V7	5	4 7	1 0	50m	8.0	2 0	175J	A1cd
166♦	BZX85C4V7	5	4 7	1 0	45m	13	1 0	150A	DO15
167	CD31-00005	5	4.7	1.0	53m	8 0	2 7	200A	A1ce
168	CD31-12012	5	4 7	1 0	53m	10			
169	CZ4 7	†	4 7	1 0	60m	14		175	DO15
170	G4 7T20,10,5	xxx	4.7	1 0	53m	8.0	2.0	175A	DO15
171#	GZ4 7	5	4 7	1 0	25m	30 △		150A	S115
172▼	HEP602-RT	5	4.7	1.0	53	8 0			DO41
173	JZ4.7	†	4 7	1 0	53m	8.0	2.0	175	DO15
174	LPM4 7,A,-20	xx*	4.7	1.0	53m	8.0		150A	A1kk
175	SZ4 7	xxxx	4.7	1.0	20m	12 ∅	2.9	150A	A3g
176#	Z2A47F	xxx	4 7	1 0	20m	28	2 0	100J	A141
177#	Z4A4 7	1	4 7	1 0	100m	4 0	6.0 △	150J	A1ef
178#	Z4B4 7	5	4 7	1 0	100m	4.0	6.0 △	150J	A1ef
179#	Z4C4 7	10	4.7	1 0	100m	4 0 ·	6.0 △	150J	A1ef
180#	Z4D4 7	15	4.7	1.0	100m	4 0	6 0 △	150J	A1ef
181	Z4.7△	†	4.7	1.0	53m	8 0	2 0	175	DO27
182	ZD4.7A,B	xx	4.7	1 0	53m	8 0		175A	A1cm
183#	ZEC4.7	20	4.7	1.0	40m	11	0 0	165A	DO3
184	ZM4 7△	†	4 7	1.0	53	8.0	2.0	175	DO41
185#	7712	5	4 7	1 1	100m	5 0	2 0	124A	A1bu
186#	BZY92C4V7	5	4 7	1 1	100m	5 0	1.0	150J	DO13
187#	ZD4.7	5	4 7	1.3	100	7.0	1.0	150J	DO13
188	ZM4.7∅	10	4 7	1 3	100	7 0	1 0	150J	DO13
189#	ZU4.7	10	4 7	1 3	100	7 0	1 0	150J	A1bg
190#	ZY4.7	5	4 7	1.3	100	7 0	1.0	150J	A1bg
191#	BZY96C4V7	5	4.7	1 5	100m	10	.60	175J	DO1
192	MZ1000-5	10	4 7	1 5 §	53m	12 ∅	4 3	175J	A1ay
193#	Z2A4 7	1	4 7	1.5	100m	4 0	5 0 △	150J	A244
194#	Z2B4.7	5	4.7	1.5	100m	4.0	5.0 △	150J	A244
195#	Z2C4 7	10	4.7	1 5	100m	4 0	5.0 △	150J	A244

SYMBOLS AND CODES EXPLAINED IN INTERPRETER

2. SILICON REFERENCE DIODES

IN ORDER OF (1) REF. VOLTAGE, (2) DISSIPATION, and (3) TYPE No.

LINE No.	3 TYPE No.	TOLERANCE 20 10 5 2 ± (%)	1 NOM. REF. VOLT. (V)	2 MAX. DISS. @ 25°C (W)	TEST CUR. Izt (A)	MAX. DYN. IMP. (Ω)	TEMP. COEFF Tc	MAX. TEMP (°C)	DWG. No.
1#	Z2D4 7	∅∅§§	4 7	1 5		5 0		150J	A6c
2#	Z3A4 7	1	4 7	1 5	100m	4 0	5 0 △	150J	S4f
3#	Z3B4.7	5	4.7	1.5	100m	4.0	5 0 △	150J	S4f
4#	Z3B47CF	xxx	4 7	1 5	20m	18	0.0	175J	DO1
5#	Z3C4.7	10	4 7	1 5	100m	4 0	5 0 △	150J	S4f
6#	Z3D4 7	∅∅§§	4 7	1 5	50m	5 0		150J	S4f
7#	55Z6,A	12,6	4 7	1.8	100m	25	5.0	150J	DO4
8	LMZ4 7,A,-20	xx*	4.7	2.0	100m	4.5		150A	A1kk
9	1N5012,A	xx	4 7	2 5	133m	3 5	1 5	150	A1gn
10	3TZ4 7,A,B,D	xxxx	4 7	3 0	200m	2 5		175	A1ec
11	3TZ4 7C	∅	4 7	3 0	200m	2 5		175	A1ec
12	1N1589,A	xx	4 7	3 5	125m	4 0	0 0	200S	DO4
13	3Z4 7T20,10,5	xxx	4 7	3 5	125m	6 0	4 0	165A	DO4
14♦	1N5337	20	4 7	5 0	260m			200A	A1ee
15▼	1N5337A	10	4.7	5 0	260m	2 0		200A	A1ee
16▼	1N5337B	5	4 7	5 0	260m	2 0		200A	A1ee
17▼	5ZS4 7,A,B	xxx	4 7	5 0 §	260m	2 0		200A	A1ts
18#	1304	10∅	4 7	5 0	100m	5 0	2 0	150J	A9h
19	1N1482	5	4 7	10	200m	3 0 ∅	4 0	175C	S154
20	1N1600,A	xx	4 7	10	400m	90	0 0	200S	DO4
21	1N3995,A	xx	4 7	10	530m	1 2		175S	DO4
22	JAN1N3995A,RA	5	4 7	10 §	53	1 2	2 5	150A	DO4
23	10Z4.7T20,10,5	xxx	4 7	10	400m	1 5	4 0	165	DO4
24	75TE4 7,A	xx	4 7	14	2 1	8 0m	4 0	125C	TO36
25#	1Z04	10∅	4.7	15	500m	1 5	2 0	150J	S87
26#	75Z6,A	12,6	4 7	25	400m	1 5	5 0	150J	S179
27#	ZL4 7	10	4.7	25 ∅	100	7 0	1 0	150J	M41
28#	ZX4 7	5	4 7	25 ∅	100	7 0	1 0	150J	M41
29	1N4551,A,B	xxx	4.7	50	2 6	12	1 5	175J	DO5
30	JAN1N4551B,RB	5	4.7	50	2 7	12	1 5	150	DO5
31	1N4559,A,B	xxx	4 7	50	2 6	12	1 5	175J	C5a
32	80TF4 7,A	xx	4.7	80	2 1	8 0m	4 0	125C	M117c
33#	VR475F	5	4 75	2.2	20m	18		200S	DO3
34#	VR475E	5	4 75	5 8	20m	18		200S	DO4
35	651C3	5	4 8	15	5 0m	60	1 8	150A	C3
36	1N705	20	4 8	25	5 0m	35		200A	A1cw
37	1N705A	5	4 8	25	5 0m	35		200A	A1cw
38	651	10	4 85	15	5 0m	62	2 0	150A	C3
39#	RD5A	10	4 85	20	10m	45	3 0	150S	A1dw
40#	1S755	xxx	4 85	25	10m	35	3 0	150	C1d
41	CD3122	5	4 85	25	10m	55 ∅	1.5	150A	A1sj
42	PS6468	13	4.85	50	10m	35		200J	A1gd
43#	RD5B	10	4 85	1 0	40m	15	0 0	150S	A164
44#	RD5C	10	4 85	3 0	120m	10	0 0	150S	S42
45#	RD5D	10	4 85	10	400m	1 8	0 0	150S	S103
46	651C4	5	4 9	.15	5 0m	57	1 5	150A	C3
47	1N473∅	10	4 9	200m	5 0m	50 △		200A	C1
48	1N473A∅	5	4.9	200m	5 0m	50 △		200A	C1
49	1N473B∅	1	4.9	200m	5 0m	50 △		200A	C1
50	IDAZ473,A,B,C∅	xxxx	4 9	200m	5 0m	50 △		200A	A1hc
51	1N468	10	4 9	250m	5 0m	35 △		200A	C1
52	1N468A	5	4 9	250m	5 0m	35 △		200A	C1
53	1N468B	1	4 9	250m	5.0m	35 △		200A	C1
54	1N761	xx	4 9	250m	10m	40	0 0	150	DO7
55	1N761A	xx	4 9	250m	10m	40	0 0	150	DO7
56	1N5677A	10	4.9	250m§	20m	25		125A	C29n
57	1N2032	5	4 9	75	10m	55	2 0	150J	DO12
58	1N2041	5	4 9	10	1 0	1 0	2 0	150J	DO4
59	1N2041C	5	4 9	10	1 0	50		150A	S19a
60	1N376	5	4 95		5 0m	15		150A	A1er
61	1N2041B	5	5 0		1 0	1 0		150A	S19a
62	651C5	5	5 0	15	5 0m	55	1 4	150A	C3
63#	SZ200-5	15	5 0	20	10m	55		100A	A138
64	1N761-2	5	5 0	25	10m	40	0 0	150	DO7
65#	1S330	12	5 0	25	10m	45	1 0	150J	A1ce
66	C5005	10	5 0	25	10m	65	1 0	75	DO7
67#	MZ1005	12	5 0	250m	10m	40	3 0	175J	DO7
68	SV122	5	5 0	25	10m	55 ∅	0 0	150	DO7
69#	SZ5	10	5 0	25	20m	30	28	150J	C1f
70▼#	BZ100∅	10	5 0	300m	5 0m				DO7
71	1N4095	10	5.0	33	5 0m		3 4	175	DO7
72#	1S190	12	5.0	40	20m	30	2 0	150J	A1ce
73♦#	2A22∅	10	5 0	400m	10m	80	7 0	200J	A159
74▼	LVA150	4	5.0	400m	250u	900	1 5	150A	DO14
75▼	LVA450	4	5.0	400m	250u	700	1 5	150A	DO14
76	WZ522	5	5.0	40	10m	20		150A	A31e
77	1N3399∅	10	5.0	.50	20m	20	7 0	200A	P5
78	IDAZ3399,A,B,C∅	xxxx	5.0	500m	20m	20	7 0	200A	A1hc
79	1N2032-2	5	5.0	75	10m	55	2 0	150J	DO12
80	SV1005	5	5.0	75	10m	55 ∅	0 0	150	A82f
81	WZ905	5	5 0	75	10m	55 ∅		150A	A1ep
82	IDA1Z5,A,B,C∅	xxxx	5.0	1 0	25m			200A	A1ht
83	1N2041-2	5	5 0	10	1 0	1 0	2 0	150J	DO4
84	1N4240	2	5 0	10	400m	68		175S	DO4
85#	MR51E-H	15	5 1			80			DO7
86#	RZ5 1	5	5 1	08	5 0m	80 △		150A	C18e
87#	RZZ5 1	5	5 1	80m	5 0m	90 △		150A	C18e
88▼#	BZX84C5V1	5	5 1	110m	5 0m	70	1 5	125J	M500
89	651C6	5	5 1	15	5 0m	52	1 3	150A	C3
90#	AZ5 1	5	5 1	15	5 0m	90		170A	DO7
91#	BZ5 1	5	5 1	15	5 0m	60		170A	DO7
92#	Z5 1∅	5	5 1	150m	5 0m	80 △		150A	C18d
93#	ZZ5 1	5	5 1	.15	5 0m	90 △		150A	C18d
94#	OAZ269	20	5 1	23	1 0m	360		150J	A3
95	1/4M5 1AZ,10,5	xxx	5 1	25	10m	25	1 0	175J	A1cy
96	1N4625	5	5 1	.25	250u	1 5		200	DO14
97	1N4689	5	5 1	25	50u			200A	DO14
98#	9973	5	5 1	25	10m	35	2.0	150J	C18f
99#	BZY83C5V1	5	5 1	25	5 0m	75	3.0 △	150J	C1g
100#	BZY85C5V1	5	5 1	25 §	5 0m	60	3.0 △	150J	A171f
101	GLA51,A,B	xxx	5 1	.25	5.0m	10	80	175	DO7
102#	HS2051	5	5 1	25	5.0m			175A	DO7
103#	KS2051A	5	5.1	250m	5.0m	80	3 0 △	150A	DO7
104#	KS2051B	10	5.1	250m	5 0m	85	4 0 △	150A	DO7
105	LAC2003	10	5 1	250m	5.0m	15			M520a
106	MGLA51,A,B	xxx	5 1	.25	5 0m	10	80	150	A2
107#	MR51C-H	5	5 1	25	5.0m	70		250	DO7
108	MZ4625	∅	5 1	250m	250u	1 5k		200J	DO7
109	PD6007,A	xx	5 1	25	10m	40		150	A109
110	PD6048	5	5 1	25	10m	25		150	A2c
111	PD6203	10	5 1	250m	5 0m	15			A109
112#	OAZ241	5	5 1	278m	1 0m	360 ∅	18	150J	A24c
113#	BZY57	5	5 1	.28	1 0m	360		150J	A3
114#	BZY65	15	5 1	28	1 0m	360		150J	A3
115	OAZ201	5	5 1	.30	1 0m	400	3.5	150J	C1c
116	OAZ209	15	5 1	.30	1.0m	400	3.5	150J	C1c
117#	Z1A5 1	1	5 1	320m	5 0m	60	6 0 △	150A	C29
118#	Z1B5 1	5	5 1	320m	5 0m	60	6 0 △	150A	C29
119#	Z1C5 1	10	5.1	320m	5 0m	60	6 0 △	150A	C29
120#	Z1D5.1	15	5.1	320m	5 0m	60	6 0 △	150A	C29
121	LDZ70/5A1	5	5 1	360m	20m	17		150J	M401
122▼#	1A60	5	5 1	400m	20m	17	2.0	200J	A159
123#	1N751	10	5 1	400m	20m	17	800m	175A	A1
124#	1N751A	5	5 1	400m	20m	17	800m	175A	A1
125	JAN1N751A	5	5 1	400m	20m	14	3 0	175A	A1dd
126	1N3511	5	5.1	40	20m	14	.80	200A	DO7
127	JAN1N4625	5	5.1	400m	250u	1 5k	4 5 △	175A	A1sx
128	1N5523	20	5 1	400m§	5.0m			175A	DO7
129	1N5523A	10	5.1	400m§	5 0m			175A	DO7
130	1N5523B	5	5 1	400m§	5.0m	26		175A	DO7
131▼	JAN1N5523B	5	5 1	400m	5.0m	26	3 0	200A	DO14
132	1N5523C	2	5 1	400m§	5.0m	26		175A	DO7
133	1N5523D	1	5 1	400m§	5.0m	26		175A	DO7
134▼	1N5729B	5	5 1	400m	10m	50	376m	200J	DO35
135#	1S2051	10	5 1	.40	5 0m	85	1 0	150A	A1
136#	1S2051A	5	5 1	40	5 0m	80	1 0	150A	A1
137#	1S7051,B	§§	5 1	40	5 0m	85	1 0	150A	A1
138#	1S7051A	5	5 1	40	5.0m	80	1 0	150A	A1
139#	5513	5	5 1	40	5.0m	60	50	125A	A1ce
140	BZX46C5V1	5	5 1	400m	20m	17	2 0	150J	DO35
141#	BZX55C5V1	5	5 1	400m	5.0m	60	2 0	150J	DO35
142▼#	BZX71B5V1	2	5 1	400m§	5 0m	65		175J	DO35
143#	BZX71C5V1	5	5 1	400m§	5 0m	65		200S	A9m
144#	BZX79C5V1	5	5 1	400m	5.0m	60		200J	A257
145#	BZX83C5V1	5	5 1	400m	5 0m	60	2.0	150J	DO35
146▼#	BZY85B5V1	2	5 1	400m	5 0m	65	2 5	150J	DO7
147#	BZY88C5V1	5	5.1	40	5 0m	46 ∅		150	DO7
148	C6107	10	5 1	40	5 0m	15 ∅		175	M185
149	C6107A	5	5 1	40	5 0m	15 ∅		175	M185
150	CZF5 1D,10,5	xxx	5 1	40 ∅	250u	1 5k	2 5	175J	M452
151	CZG5 1D,10,5	xxx	5 1	40 ∅	20m	17	1 0	175J	M452
152#	HS7051	5	5 1	40	5.0m			175A	DO7
153#	KS051A	5	5 1	40	5.0m	70	4 5 △	150A	DO7
154#	LR51CH	5	5 1	40	5.0m	70	1 1	150S	DO7
155	M4Z5.1,A,-20	xx*	5 1	40	25m	27		150A	A1kk
156	MACZF5 1D,10,5	xxx	5 1	.40 ∅	250u	1 5k	2 5	175J	M453
157	MACZG5 1D,10,5	xxx	5 1	40 ∅	20m	17	1 0	175J	M453
158	MBCZF5 1D,10,5	xxx	5 1	400m∅	250u	1 5k	2 5	175J	M454
159	MBCZG5 1D,10,5	xxx	5 1	40 ∅	20m	17	1 0	175J	M454
160	MCCZF5 1D,10,5	xxx	5 1	40 ∅	250u	1 5k	2 5	175J	M455
161	MCCZG5 1D,10,5	xxx	5 1	.40 ∅	20m	17	1 0	175J	M455
162	MDCZF5 1D,10,5	xxx	5 1	.40 ∅	250u	1 5k	2.5	150A	M410
163	MDCZG5 1D,10,5	xxx	5 1	.40 ∅	20m	17	1 0	150A	M410
164	MZ500-9	10	5 1	40 §	20m	20 ∅	6 0	175J	DO7
165	MZC5 1A10	†	5 1	400m§	9 8m	21	3 0 △	175J	M468
166	MZC5 1B10	§†	5 1	400m§	250u	1 5k		175J	M468
167#	Z5A5.1	1	5 1	400m§	5 0m	55	5 0 △	200J	A1hs
168#	Z5B5.1	5	5.1	400m§	5.0m	55	5.0 △	200J	A1hs
169#	Z5C5 1	10	5 1	400m§	5 0m	55	5 0 △	200J	A1hs
170#	Z5D5 1	15	5 1	400m§	5.0m	55	5 0 △	200J	A1hs
171#	ZF5 1	5	5 1	400m	5 0m	60	1 0	150J	DO7
172#	ZP5.1	5	5 1	400m	5 0m	60	500m	150J	DO7
173	1/2Z5 1T5	5	5.1	.50	20m	16		175	A94f
174	1N5231	20†	5 1	50	20m			200A	DO7
175	1N5231A,B	§∅	5 1	50	20m	14	3 0	200A	DO7
176▼	HEPZ0211-RT	10	5.1	500m	20	17			C103
177	MZ92-5.1	†	5 1	500m§	20m		2.5	150J	C103
178	PS8906	5	5.1	50	20m	14	50	150	A60p
179	S5231,A,B	xxx	5 1	500m	20m	17	3 0	175	DO41
180#	ZSF5 1	1	5 1	500m	7 0m	10	1.0	150S	M487
181#	ZOA5.1	1	5 1	520m	5 0m	25	6 0 △	150J	A1ef
182#	ZOB5.1	5	5 1	520m	5 0m	25	6 0 △	150J	A1ef
183#	ZOC5 1	10	5 1	520m	5 0m	25	6 0 △	150J	A1ef
184#	ZOD5 1	15	5.1	520m	5.0m	25	6 0 △	150J	A1ef
185	LVA51A	5	5 1	600m	5 0m	15			DO14
186	LVA51B	2	5 1	600m	5 0m	15			DO14
187	LVA351A	5	5 1	600m	5 0m	10			DO14
188	LVA351B	2	5 1	600m	5 0m	10			DO14
189#	UZ5.1	10	5 1	60	118m	5.0	1 0	135A	DO3
190#	ZW5.1	5	5.1	600m	5 0m	60	1 0	150J	A1bg
191	MMZ5 1,A,-20	xx*	5 1	.75	25m	27		150A	A1kk
192	MZ5 1T20,10,5	xxx	5.1	75	30m	19	4.0	165A	A152
193	1D5 1A,B	xx	5 1	1 0	49m	7 0		150A	A1cn
194	1N3732	5	5.1	1 0	40m	8 5		175	DO1
195	1N3826	10	5 1	1 0	49m	7 0	500m	175A	A31a
196	1N3826A	5	5 1	1 0	49m	7.0	500m	175A	A31a

SYMBOLS AND CODES EXPLAINED IN INTERPRETER

2. SILICON REFERENCE DIODES

IN ORDER OF (1) REF. VOLTAGE, (2) DISSIPATION, and (3) TYPE No.

LINE No.	3 TYPE No	TOLERANCE 1 20 10 5 2 ± (%)	NOM. REF VOLT. (V)	2 MAX DISS @ 25°C (W)	TEST CUR. Izt (A)	MAX. DYN IMP. (Ω)	TEMP. COEFF Tc	MAX. TEMP (°C)	DWG. No
1	JAN1N3826A	5	5 1	1 0	49m	7 0	3 0	175A	A31a
2	1N4654	5	5 1	1 0	49m	550	3 0	200A	DO15
3	1N4733,A	xx	5.1	1 0	49m	7 0		200A	A1ay
4	1Z5 1,A,B	xxx	5 1	1 0	49m	7 0		150	A1ay
5	1Z5 1T20,10,5	xxx	5 1	1 0	40m	18	4 0	165A	A89c
6#	1ZC5 1T10,5	xx	5 1	1 0	40m	11	1 0	165A	A31p
7#	16Z6F,AF	12,6	5 1	1 0	10m	36	6 0	150J	DO13
8#	BZX29C5V1	5	5 1	1 0	50m	7 0	50	175	A1cd
9♦	BZX85C5V1	5	5 1	1 0	45m	10	2 0	150A	DO15
10	CD31-00006	5	5 1	1 0	49m	7 0	2 0	200A	A1ce
11	CD31-12013	5	5 1	1 0	49m	10			200A	DO14
12	CZ5 1	†	5 1	1 0	60m	12	500m	175	DO15
13	G5 1T20,10,5	xxx	5 1	1 0	49m	7.0	1 0	175A	DO15
14#	GZ5 1	5	5 1	1 0	25m	30 △		150A	S115
15	JZ5 1	†	5 1	1 0	49m	7 0	500m	175	DO15
16	LPM5 1,A,-20	xx*	5 1	1 0	49m	7 0		150A	A1kk
17	SZ5.1	xxxx	5 1	1 0	20m	10 ∅	1 9	150A	A3g
18#	Z2A51F	xxx	5 1	1 0	20m	26	50	100J	A141
19#	Z4A5 1	1	5 1	1 0	100m	4 0	6 0 △	150J	A1ef
20#	Z4B5 1	5	5 1	1 0	100m	4 0	6 0 △	150J	A1ef
21#	Z4C5 1	10	5 1	1 0	100m	4 0	6 0 △	150J	A1ef
22#	Z4D5.1	15	5 1	1 0	100m	4 0	6 0 △	150J	A1ef
23	Z4X5.1B,A	xx	5 1	1 0	100m	7 0	1 3	175A	DO13
24	Z5 1△	†	5 1	1 0	49m	7 0	500m	175	DO27
25	ZD5 1A,B	xx	5 1	1 0	49m	7 0		175A	A1cm
26	ZM5 1	†	5 1	1 0	49	7 0	500m	175	DO41
27#	7713	5	5 1	1 1	100m	5 0	50	125A	A1bu
28#	BZY92C5V1	5	5 1	1 1	100m	5 0		150J	DO13
29#	ZD5 1	5	5 1	1 3	100	5 0	1 0	150J	DO13
30#	ZY5 1	5	5 1	1 3	100	5 0	1 0	150J	A1bg
31#	BZY96C5V1	5	5.1	1 5	100m	5.0	40	175J	DO1
32	MZ1000-6	10	5 1	1 5 §	49m	11 ∅	6 0	175J	A1ay
33#	Z2A5 1	1	5 1	1 5	100m	3 0	5 0 △	150J	A244
34#	Z2B5 1	5	5 1	1 5	100m	3.0	5 0 △	150J	A244
35#	Z2C5 1	10	5 1	1 5	100m	3 0	5 0 △	150J	A244
36#	Z2D5 1	15	5 1	1 5	100m	3 0	5.0 △	150J	A244
37#	Z3A5 1	1	5 1	1.5	100m	3 0	5 0 △	150J	S4f
38#	Z3B5 1	5	5 1	1 5	100m	3 0	5 0 △	150J	S4f
39#	Z3B51CF	xxx	5 1	1 5	20m	18	1 0	175J	DO1
40#	Z3C5 1	10	5 1	1 5	100m	3.0	5 0 △	150J	S4f
41#	Z3D5 1	15	5 1	1 5	100m	3 0	5 0 △	150J	S4f
42#	56Z6,A	12,6	5 1	1 8	100m	20	5 0	150J	DO4
43	LMZ5 1,A,-20	xx*	5 1	2 0	98m	4.0		150A	A1kk
44	1N5013,A	xx	5 1	2 5	122m	3 0	1 0	150	A1gn
45	3TZ5.1,A,B,D	xxxx	5 1	3 0	200m	2 5		175	A1ec
46	3TZ5 1C	∅	5 1	3 0	200m	2 5		175	A1ec
47	3Z5.1T20,10,5	xxx	5 1	3 5	125m	5 5	4.0	165A	DO4
48♦	1N5338	20	5 1	5.0	240m			200A	A1ee
49▼	1N5338A	10	5 1	5.0	240m	1 5		200A	A1ee
50▼	1N5338B	5	5 1	5 0	240m	1 5		200A	A1ee
51▼	5ZS5 1,A,B	xxx	5 1	5 0 §	240m	1 5		200A	A1ts
52#	9983	5	5 1	5 0	10	5 0	2 0	150J	A9h
53	1N3996,A	xx	5 1	10	490m	1 1		175S	DO4
54	JAN1N3996A,RA	5	5 1	10 §	49	1 1	3.0	150A	DO4
55	10Z5 1T20,10,5	xxx	5 1	10	400m	1 2	4 0	165	DO4
56#	9993	5	5 1	15	50	1 0	2 0	150J	S87
57#	76Z6,A	12,6	5.1	25	400m	1 0	5 0		S179
58#	ZX5 1	5	5 1	25 ∅	100	5 0	1 0	150J	M41
59	1N4552,A,B	xxx	5 1	50	2 4	12	1 0	175J	DO5
60	JAN1N4552B,RB	5	5 1	50	2 5	12	2 0	150	DO5
61	1N4560,A,B	xxx	5 1	50	2 4	12	1 0	175J	C5a
62	651C7	5	5 2	15	5 0m	47	1 1	150A	C3
63♦#	2A21∅	10	5 2	400m	10m	80	7.0	200J	A159
64#	VR525F	5	5 25	2 2	20m	17		200S	DO3
65#	VR525E	5	5 25	5 8	20m	17		200S	DO4
66	651C8	5	5 3	15	5 0m	43	80	150A	C3
67▼	LVA153	3 7	5 3	400m	250u	500	2 5	150A	DO14
68▼	LVA453	3 7	5 3	400m	250u	250	2 5	150A	DO14
69#	BZY78	5	5 35	24	12m	20	01		A3
70#	BZY78P	10	5 35	280m	11m	20	1 0	80J	DO7
71	651C9	5	5 4	15	5.0m	39	60	150A	C3
72	1N5678A	10	5 4	250m§	20m	25		125A	C29n
73	HR5.4	5	5 4	25	5 0m	20		175A	DO7
74	652C0	5	5 5	15	5 0m	35	0 0	150A	C3
75	1N762-1	5	5 5	25	10m	18	3 0	150	DO7
76	SV123	5	5 5	25	10m	20 ∅	1 5	150	DO7
77	WZ523	5	5.5	40	10m	10		150A	A31e
78	1N2033A	5	5 5	75	10m	20	3 0	150J	DO12
79	SV1006	5	5 5	75	10m	20 ∅	1 5	150	A82f
80	WZ906	5	5 5	75	10m	20 ∅		150A	A1ep
81	1N2214	2	5 5	1 0	35m	5 6	3 0	165S	DO1
82#	1S221	10	5 5	1 0	50m	14		150J	A56a
83	1N2042-1	5	5 5	10	1 0	70	3 0	150J	DO4
84	1N2042A	5	5 5	10	1 0	70		150A	S19a
85	1N3984	5	5 5	10	1 0	70		150S	DO4
86#	1S263	10	5 5	10	500m	2 0		150J	S19g
87#	BZX55C5V6	7	5 6		5 0m	40			A1ct
88#	BZX55D5V6	10	5.6		5 0m	60			A1ct
89#	BZY83D5V6	10	5 6		100m	4 0	5 0		M72
90#	BZY84D5V6	10	5 6		100m	4.0	5 0		M72
91	MC69	2	5 6		10m	8 0			M409b
92#	RZ5 6	5	5 6	80m	5 0m	80 △		150A	C18e
93#	RZZ5.6	5	5 6	80m	5.0m	90 △		150A	C18e
94	FZ901	10	5 6	10	2 0m	100	3 5	125A	C98
95▼#	BZX84C5V6	5	5 6	110m	5 0m	40	2 1	125J	M500
96	1N1983	10	5 6	150m	5 0m	8.0	1 0	150	C1
97	1N1983A	5	5 6	150m	5 0m	8.0	1 0	150	C1
98	1N1983B	1	5.6	150m	5 0m	8 0	1 0	150	C1
99	652C1	5	5 6	15	5 0m	31	30	150A	C3
100	AZ5 6	5	5.6	15	5 0m	80		170A	DO7
101#	BZ5 6	5	5 6	.15	5.0m	25		170A	DO7
102#	LZ5 6	10	5 6	.15	5.0m	100		170A	DO7
103#	Z5.6∅	5	5 6	150m	5.0m	80 △		150A	C18d
104#	ZZ5.6∅	5	5 6	15	5.0m	90 △		150A	C18d
105	1N1929	10	5 6	200m	5.0m	8.0	1 0	150A	A82e
106	1N1929A	5	5 6	200m	5.0m	8 0	1 0	150A	A82e
107	1N1929B	1	5 6	200m	5.0m	8 0	1 0	150A	A82e
108	1/4M5 6AZ,10,5	xxx	5 6	25	10m	20	2 5	175J	A1cy
109	1N708,A	xx	5.6	25	25m	3 6	1 5	175A	DO7
110	1N708B	20	5.6	25	25m	3 6			DO7
111	1N4626	5	5.6	25	250u	1 4		200	DO14
112	1N4690	5	5.6	25	50u			200A	DO14
113#	02Z5.6A	5	5 6	250m	10m	30	3 2	175J	DO35
114#	1105	10∅	5.6	25	10m	20	0 0	150J	C18f
115▼	BLVA156	3 5	5.6	250m	250u	950	2 4	150A	A9n
116▼	BLVA456	3 5	5 6	250m	250u	850	2 4	150A	A9n
117#	BZY83C5V6	5	5.6	25	5 0m	60	4 0 △	150J	C1g
118#	BZY85C5V6	5	5.6	25 §	5 0m	40	4 0 △	150J	A171f
119	GLA56,A,B	xxx	5 6	.25	1 0m	40	64	175	DO7
120#	HS2056	5	5.6	25	5 0m			175A	DO7
121#	KS2056A	5	5.6	250m	5 0m	75	2 0 △	150A	DO7
122#	KS2056B	10	5.6	250m	5 0m	80	5 0 △	150A	DO7
123	LAC2004	10	5 6	250m	1 0m	40			M520a
124	MCPD533A	10	5 6	.25	10m	8 0		150A	M411
125	MGLA56,A,B	xxx	5 6	25	1 0m	40	.64	150	A2
126#	MR56C-H	5	5.6	25	5 0m	50		250	DO7
127#	MZ5A	10	5 6	25	18m	5 0	2 0	150A	DO7
128	MZ4626	∅	5 6	250m	250u	1 4k		200J	DO7
129	PD6008,A	xx	5 6	25	10m	30		150	A109
130	PD6049	5	5.6	.25	10m	20		150	A2c
131	PD6204	10	5.6	250m	1 0m	40			A109
132#	OAZ242	5	5.6	278m	1 0m	280 ∅	10	150J	A24c
133#	BZY58	5	5 6	28	1 0	280		150J	A3
134	MC6007,A	xx	5 6	30	10m	8 0		175	A2m
135	OAZ202	5	5 6	30	1.0m	380	1.8	150J	C1c
136#	Z1140	5	5 6	300m	4 0m	60	100m	150S	C29d
137#	Z1145	5	5 6	300m	4 5m	50	100m	150S	C29d
138#	Z1150	5	5 6	300m	5.0m	45	100m	150S	C29d
139#	Z1155	5	5 6	300m	5 5m	40	100m	150S	C29d
140#	Z1160	5	5 6	300m	6 0m	37	100m	150S	C29d
141#	Z1165	5	5 6	300m	6 5m	33	100m	150S	C29d
142#	Z1170	5	5 6	300m	7.0m	30	100m	150S	C29d
143#	Z1240	5	5.6	300m	4.0m	60	200m	150S	C29d
144#	Z1245	5	5 6	300m	4.5m	50	200m	150S	C29d
145#	Z1250	5	5.6	300m	5 0m	45	200m	150S	C29d
146#	Z1255	5	5 6	300m	5 5m	40	200m	150S	C29d
147#	Z1260	5	5.6	300m	6.0m	37	200m	150S	C29d
148#	Z1265	5	5 6	300m	6 5m	33	200m	150S	C29d
149#	Z1270	5	5 6	300m	7 0m	30	200m	150S	C29d
150#	Z1540	5	5 6	300m	4.0m	60	500m	150S	C29d
151#	Z1545	5	5 6	300m	4.5m	50	500m	150S	C29d
152#	Z1550	5	5 6	300m	5.0m	45	500m	150S	C29d
153#	Z1555	5	5 6	300m	5.5m	40	500m	150S	C29d
154#	Z1560	5	5 6	300m	6.0m	37	500m	150S	C29d
155#	Z1565	5	5 6	300m	6 5m	33	500m	150S	C29d
156#	Z1570	5	5 6	300m	7.0m	30	500m	150S	C29d
157#	Z1A5.6	1	5 6	320m	5 0m	40	6 0 △	150A	C29
158#	Z1B5 6	5	5.6	320m	5 0m	40	6.0 △	150A	C29
159#	Z1C5 6	10	5 6	320m	5.0m	40	6 0 △	150A	C29
160#	Z1D5.6	15	5.6	320m	5 0m	40	6 0 △	150A	C29
161	LDZ70/5A6	5	5 6	360m	20m	11		150J	M401
162▼#	1A61	5	5 6	400m	20m	11	3 0	200J	A159
163#	1N752	10	5 6	400m	20m	11	600m	175A	A1
164#	1N752A	5	5.6	400m	20m	11	600m	175A	A1
165	JAN1N752A	5	5 6	400m	20m	8 0	3 2	175A	A1dd
166	1N3512	5	5.6	40	20m	8 0	60	200A	DO7
167	JAN1N4626	5	5 6	400m	250u	1 4k	4 0 △	175A	A1sx
168	1N5524	20	5 6	400m§	3 0m			175A	DO7
169	1N5524A	10	5.6	400m§	3 0m			175A	DO7
170	1N5524B	5	5 6	400m§	3 0m	30		175A	DO7
171▼	JAN1N5524B	5	5 6	400m	3 0m	30	3 0	200A	DO14
172	1N5524C	2	5 6	400m§	3 0m	30		175A	DO7
173	1N5524D	1	5 6	400m§	3.0m	30		175A	DO7
174▼	1N5730B	5	5 6	400m	10m	25	2 1	200J	DO35
175#	1S2056	10	5 6	40	5 0m	80	50	150A	A1
176#	1S2056A	5	5 6	40	5 0m	75	50	150A	A1
177#	1S7056,B	$§	5 6	400m	5 0m	80	50	150A	A1
178#	1S7056A	5	5 6	40	5.0m	75	50	150A	A1
179#	5514	5	5.6	40	5 0m	40	50	125A	A1ce
180#	BZX46C5V6	5	5 6	400m	20	3 5	3 0	175J	DO35
181▼#	BZX71B5V6	2	5 6	400m§	5 0m	25		175J	DO35
182#	BZX71C5V6	5	5 6	400m§	5.0m	55		200S	A9m
183#	BZX74C5V6	5	5 6	400m	25m	200	2 5		A31e
184#	BZX79C5V6	5	5 6	400m	5 0m	25		200J	A257
185#	BZX83C5V6	5	5 6	400m	5 0m	40	3 0	150J	DO35
186▼#	BZY85B5V6	2	5 6	400m	5.0m	55	3 0	150J	DO7
187#	BZY85D5V6	10	5 6	400m	5 0m	60	300m	150J	A1su
188#	BZY88C5V6	5	5 6	40	5 0m	22 ∅		150	DO7
189	C6108	10	5 6	.40	5.0m	5 0 ∅		175	M185
190	C6108A	5	5 6	.40	5 0m	5 0 ∅		175	M185
191	CZF5 6D,10,5	xxx	5 6	40 ∅	250u	1 4k	1 5	175J	M452
192	CZG5 6D,10,5	xxx	5 6	40 ∅	20m	11	3 0	175J	M452
193#	HS7056	5	5 6	.40	5 0m			175A	DO7
194#	KS056A	5	5.6	40	5 0m	60	6 0 △	150A	DO7
195#	KS056B	10	5 6	40	5 0m	70	6.0 △	150A	DO7
196#	LR56CH	5	5 6	40	5 0m	50	90	150S	DO7
197▼	LVA156	3.5	5 6	400m	250u	200	3 5	150A	DO14
198▼	LVA456	3 5	5 6	400m	250u	100	3 5	150A	DO14
199	M4Z5 6,A,-20	xx*	5 6	40	22m	16		150A	A1kk
200#	M5 6Z	5	5.6	400m	5.0m	300	2 5		A31e
201	MACZF5.6D,10,5	xxx	5 6	40 ∅	250u	1 4k	1 5	175J	M453
202	MACZG5.6D,10,5	xxx	5 6	.40 ∅	20m	11	3 0	175J	M453
203	MBCZF5 6D,10,5	xxx	5 6	400m∅	250u	1 4k	1.5	175J	M454

SYMBOLS AND CODES EXPLAINED IN INTERPRETER

2. SILICON REFERENCE DIODES

IN ORDER OF (1) REF. VOLTAGE, (2) DISSIPATION, and (3) TYPE No.

LINE No	TYPE No	TOLERANCE 20 10 5 2 ± (%)	NOM. REF. VOLT (V)	MAX DISS @ 25°C (W)	TEST CUR Izt (A)	MAX. DYN IMP. (Ω)	TEMP. COEFF Tc	MAX. TEMP (°C)	DWG. No
1	MBCZG5 6D,10,5	xxx	5 6	40 ∅	20m	11	3 0	175J	M454
2	MCCZF5 6D,10,5	xxx	5 6	40 ∅	250u	1 4k	1 5	175J	M455
3	MCCZG5 6D,10,5	xxx	5.6	40 ∅	20m	11	3 0	175J	M455
4	MDCZF5 6D,10,5	xxx	5 6	40 ∅	250u	1 4k	1 5	150A	M410
5	MDCZG5 6D,10,5	xxx	5 6	40 ∅	20m	11	3 0	150A	M410
6	MZ500-10	10	5 6	40 §	20m	15 ∅	5 6	175J	DO7
7	MZC5 6A10	†	5 6	400m§	8 9m	25	3 8 △	175J	M468
8	MZC5 6B10	§†	5 6	400m§	250u	1.4k		175J	M468
9#	Z5A5 6	1	5.6	400m§	5 0m	50	5.0 △	200J	A1hs
10#	Z5B5.6	5	5 6	400m§	5 0m	50	5 0 △	200J	A1hs
11#	Z5C5 6	10	5 6	400m§	5 0m	50	5 0 △	200J	A1hs
12#	Z5D5 6	15	5 6	400m§	5 0m	50	5 0 △	200J	A1hs
13#	Z5140	5	5 6	400m	4 0m	60	100m	200S	A1ce
14#	Z5145	5	5 6	400m	4 5m	50	100m	200S	A1ce
15#	Z5150	5	5 6	400m	5 0m	45	100m	200S	A1ce
16#	Z5155	5	5 6	400m	5 5m	40	100m	200S	A1ce
17#	Z5160	5	5 6	400m	6 0m	37	100m	200S	A1ce
18#	Z5165	5	5 6	400m	6 5m	33	100m	200S	A1ce
19#	Z5170	5	5 6	400m	7.0m	30	100m	200S	A1ce
20#	Z5240	5	5 6	400m	4 0m	60	200m	200S	A1ce
21#	Z5245	5	5 6	400m	4 5m	50	200m	200S	A1ce
22#	Z5250	5	5 6	400m	5 0m	45	200m	200S	A1ce
23#	Z5255	5	5 6	400m	5 5m	40	200m	200S	A1ce
24#	Z5260	5	5 6	400m	6.0m	37	200m	200S	A1ce
25#	Z5265	5	5.6	400m	6 5m	33	200m	200S	A1ce
26#	Z5270	5	5 6	400m	7 0m	30	200m	200S	A1ce
27#	Z5540	5	5 6	400m	4 0m	60	500m	200S	A1ce
28#	Z5545	5	5 6	400m	4 5m	50	500m	200S	A1ce
29#	Z5550	5	5 6	400m	5 0m	45	500m	200S	A1ce
30#	Z5555	5	5 6	400m	5 5m	40	500m	200S	A1ce
31#	Z5560	5	5 6	400m	6 0m	37	500m	200S	A1ce
32#	Z5565	5	5 6	400m	6 5m	33	500m	200S	A1ce
33#	Z5570	5	5.6	400m	7 0m	30	500m	200S	A1ce
34#	ZF5 6	5	5 6	400m	5 0m	40	500m	150J	DO7
35#	ZG5 6	10	5.6	400m	5 0m	75	500m	150J	DO7
36#	ZP5 6	5	5.6	400m	5 0m	40	2 0	150J	DO7
37	1/2Z5 6T5	5	5 6	50	20m	10		175	A94f
38	1N5232	20†	5 6	50	20m			200A	DO7
39	1N5232A,B	§∅	5 6	50	20m	8 0	3 8	200A	DO7
40▼	HEPZ0212-RT	10	5 6	500m	20	15			C103
41	MCPD533B	10	5 6	500m	10m	8 0		150A	M411a
42	MCPD533C	10	5 6	500m	10m	8 0		150A	M277d
43	MTZ607,A	xx	5 6	50	10m	8 0		175A	A60e
44	MZ92-5 6	†	5 6	500m§	20m		3 5	150J	C103
45	PS8907	5	5 6	50	20m	8 0	2 0	150	A60p
46	S5232,A,B	xxx	5 6	500m	20m	11	3 8	175	DO41
47#	ZSF5 6	1	5 6	500m	7 0m	10	1.0	150S	M487
48#	Z0A5 6	1	5.6	520m	5 0m	20	6 0 △	150J	A1ef
49#	Z0B5 6	5	5 6	520m	5 0m	20	6 0 △	150J	A1ef
50#	Z0C5.6	10	5 6	520m	5 0m	20	6 0 △	150J	A1ef
51#	Z0D5 6	15	5 6	520m	5 0m	20	6.0 △	150J	A1ef
52	LVA56A	5	5 6	600m	1 0m	40			DO14
53	LVA56B	2	5 6	600m	1 0m	40			DO14
54	LVA356A	5	5 6	600m	1 0m	40			DO14
55	LVA356B	2	5 6	600m	1 0m	40			DO14
56#	UZ5 6	10	5 6	60	107m	4 0	3 0	135A	DO3
57#	ZW5.6	5	5 6	600m	5 0m	40	500m	150J	A1bg
58	ZZ5 6△	10	5 6	60	20m	17	0 0	175A	M222
59	1N1509,A	xx	5 6	75	26m	11	3 0	200S	DO12
60	MC6107,A	xx	5 6	75	25m	8 0		175	A2d
61	MMZ5 6,A,-20	xx*	5 6	75	22m	16		150A	A1kk
62	MZ5 6T20,10,5	xxx	5 6	75	26m	17	3.0	165A	A152
63	1D5 6A,B	xx	5 6	1 0	45m	5 0		150A	A1cn
64	1N1520,A	xx	5 6	1 0	35m	10	3 0	200S	DO3
65	1N1765,A	xx	5 6	1 0	100m	1 2		175J	DO13
66	1N3827	10	5 6	1 0	45m	5 0	2 0	175A	A31a
67	1N3827A	5	5 6	1 0	45m	5 0	2 0	175A	A31a
68	JAN1N3827A	5	5 6	1 0	45m	5 0	4.0	175A	A31c
69	1N4655	5	5 6	1 0	45m	600	4.0	200A	DO15
70	1N4734,A	xx	5 6	1 0	45m	5 0		200A	A1ay
71	1Z5 6,A,B	xxx	5 6	1 0	45m	5 0		150	A1ay
72	1Z5 6T20,10,5	xxx	5 6	1 0	35m	15	3 0	165A	A89c
73#	1ZC5 6T10,5	xx	5 6	1 0	35m	10	3 0	165A	A31p
74#	17Z6F,AF	12,6	5 6	1 0	10m	36	6.0	150J	DO13
75#	BZX29C5V6	5	5 6	1 0	50m	5 0	2.0	175J	A1cd
76♦	BZX85C5V6	5	5 6	1 0	45m	7 0	3 0	150A	DO15
77	CD31-00007	5	5 6	1 0	45m	5 0	2 0	200A	A1ce
78	CD31-12014	5	5 6	1 0	45m	7 0			
79	CZ5 6	†	5 6	1 0	60m	10	2 0	175	DO15
80	EVR4,A,B	xxx	5 6	1 0	45m	9 0		175A	DO27
81#	FPZ5V6	5	5 6	1 0	43m	400	3.0		A31h
82	G5 6T20,10,5	xxx	5 6	1 0	45m	5 0	2 0	175A	DO15
83#	GZ5 6	5	5 6	1.0	25m	25 △		150A	S115
84▼	HEP603-RT	5	5 6	1 0	45	5 0			DO41
85	JZ5 6,A,B,D	xxxx	5 6	1 0	45m	5 0	2 0	175	DO15
86	JZ5 6C	∅	5 6	1 0	45m	5 0	2.0	175	DO15
87	LPM5 6,A,-20	xx*	5 6	1 0	45m	5 0		150A	A1kk
88	SZ5 6	xxxx	5 6	1.0	20m	6 0 ∅	.90	150A	A3g
89	VR5 6,A,B	xxx	5 6	1 0	45m	5.0		125A	A1b
90#	Z2A56F	xxx	5 6	1.0	20m	23	2 0	100J	A141
91#	Z4A5 6	1	5 6	1.0	100m	3.0	6.0 △	150J	A1ef
92#	Z4B5 6	5	5.6	1.0	100m	3.0	6 0 △	150J	A1ef
93#	Z4C5.6	10	5 6	1 0	100m	3.0	6.0 △	150J	A1ef
94#	Z4D5 6	15	5 6	1.0	100m	3 0	6 0 △	150J	A1ef
95	Z5.6,A,B,D	xxxx	5 6	1.0	45m	5 0	2.0	175	DO27
96	Z5.6C	∅	5 6	1.0	45m	5 0	2 0	175	DO27
97	ZD5 6A,B	xx	5 6	1 0	45m	5 0		175A	A1cm
98#	ZEC5.6	20	5.6	1 0	35m	10	03	165A	DO3
99	ZM5 6,A,B,D	xxxx	5 6	1 0	45	5 0	2.0	175	DO41
100	ZM5.6C	∅	5 6	1.0	45	5 0	2 0	175	DO41
101#	7714	5	5 6	1 1	100m	3 0	50	125A	A1bu
102#	BZY92C5V6	5	5 6	1.1	100m	2 0	1 0	150J	DO13
103#	ZD5 6	5	5 6	1 3	100	2 0	1 0	150J	DO13
104	ZM5.6∅	10	5 6	1 3	100	2 0	1 0	150J	DO13
105#	ZU5 6	10	5 6	1.3	100	2 0	1 0	150J	A1bg
106#	ZY5 6	5	5.6	1.3	100	2.0	1 0	150J	A1bg
107#	BZY96C5V6	5	5.6	1 5	100m	4 0	1 0	175J	DO1
108	MZ1000-7	10	5 6	1 5 §	45m	7.5 ∅	5 6	175J	A1ay
109#	SZ56A	5	5.6	1.5	20m	15	2 0	160A	A26
110#	Z2A5 6	1	5 6	1 5	100m	2.0	5.0 △	150J	A244
111#	Z2B5 6	5	5 6	1 5	100m	2.0	5.0 △	150J	A244
112#	Z2C5 6	10	5 6	1 5	100m	2 0	5 0 △	150J	A244
113#	Z2D5 6	15	5 6	1 5	100m	2 0	5 0 △	150J	A244
114#	Z3A5 6	1	5 6	1 5	100m	2 0	5 0 △	150J	S4f
115#	Z3B5 6	5	5 6	1 5	100m	2.0	5.0 △	150J	S4f
116#	Z3B56CF	xxx	5 6	1 5	20m	14	3 0	175J	DO1
117#	Z3C5.6	10	5.0	1 5	100m	2 0	5 0 △	150J	S4f
118#	Z3D5 6	15	5 6	1 5	100m	2 0	5 0 △	150J	S4f
119#	57Z6,A	12,6	5 6	1 8	100m	20	1 0	150J	DO4
120	2VR5 6,A,B	xxx	5 6	2 0	89m	3 0			A3e
121#	BZZ14	10	5 6	2 0	20m	15		150J	DO4
122	LMZ5 6,A,-20	xx*	5 6	2 0	89m	4 0		150A	A1kk
123	1N5014,A	xx	5 6	2 5	111m	2 5	3 0	150	A1gn
124	3TZ5 6,A,B,D	xxxx	5 6	3 0	200m	2 5		175	A1ec
125	3TZ5.6C	∅	5 6	3 0	200m	2.5		175	A1ec
126	3VR5 6,A,B	xxx	5 6	3 0	25	5.0			A222
127	1N1590,A	xx	5 6	3 5	110m	3 0	3 0	200S	DO4
128	3Z5 6T20,10,5	xxx	5 6	3 5	110m	4 5	3 0	165	DO4
129♦	1N5339	20	5 6	5 0	220m			200A	A1ee
130▼	1N5339A	10	5 6	5.0	220m	1 0		200A	A1ee
131▼	1N5339B	5	5 6	5 0	220m	1 0		200A	A1ee
132▼	5ZS5 6,A,B	xxx	5 6	5.0 §	220m	1 0		200A	A1ts
133#	1305	10∅	5 6	5 0	100m	3 0	0 0	150J	A9h
134	1N1601,A	xx	5 6	10	350m	60	3 0	200S	DO4
135	1N1803,A	xx	5 6	10	1 0	1 0		175A	S11
136	1N1803B	20	5 6	10	1 0	1 0			S11e
137	1N1803C,CA∅	xx	5 6	10 §	1.0	1 0		175J	S19a
138	1N3997,A	xx	5 6	10	445m	1 0		175S	DO4
139	JAN1N3997A,RA	5	5 6	10 §	45	1 0	4 0	150A	DO4
140	10Z5.6T20,10,5	xxx	5 6	10	350m	90	3 0	165	DO4
141#	OAZ222	5	5 6	10	20m	15		150J	DO4
142#	1205	§∅	5 6	15	500m	50	0 0	150J	S87
143	75TE5 6,A	xx	5 6	17	1 8	10m	4 0	125C	TO36
144#	77Z6,A	12,6	5 6	25	400m	1 0	5 0		S179
145#	ZL5 6	10	5 6	25 ∅	100	2 0	1 0	150J	M41
146#	ZX5.6	5	5 6	25 ∅	100	2.0	1.0	150J	M41
147	1N4553,A,B	xxx	5 6	50	2 2	12	3 0	175J	DO5
148	JAN1N4553B,RB	5	5 6	50	2.3	12	3 0	150	DO5
149	1N4561,A,B	xxx	5 6	50	2 2	12	3.0	175J	C5a
150	80TF5 6,A	xx	5 6	80	1 8	10m	4.0	125C	M117a
151	1N1956,A,B	xx1	5 65	40	5 0m	8 0	1 0	150	DO7
152	652C2	5	5 7	.15	5 0m	25	29	150A	C3
153#	VR575F	5	5 75	2 2	20m	10		200S	DO3
154#	VR575E	5	5 75	5 8	20m	10		200S	DO4
155	652	10	5 8	15	5.0m	25	70	150A	C3
156	652C3	5	5 8	15	5 0m	20	1 1	150A	C3
157	1N474∅	10	5 8	200m	5 0m	40 △		200A	C1
158	1N474A∅	5	5 8	200m	5 0m	40 △		200A	C1
159	1N474B∅	1	5 8	200m	5 0m	40 △		200A	C1
160	IDAZ474,A,B,C∅	xxxx	5.8	200m	5 0m	40 △		200A	A1hc
161#	RD6A	10	5.8	20	10m	30	0 0	150S	A1dw
162	1N469	10	5 8	250m	5 0m	20 △		200A	C1
163	1N469A	5	5.8	250m	5.0m	20 △		200A	C1
164	1N469B	1	5 8	250m	5.0m	20 △		200A	C1
165	1N706	20	5.8	.25	5.0m	20		200A	A1cw
166	1N706A	5	5.8	.25	5.0m	20		200A	A1cw
167	1N762	xx	5 8	250m	10m	18	3 0	150	DO7
168	1N762A	xx	5.8	250m	10m	18	3 0	150	DO7
169	1S756	xxx	5.8	25	10m	30	3 0	150	C1d
170	CD3123	5	5.8	.25	10m	20 ∅	1 8	150A	A1sj
171	PS6469	13	5 8	50	10m	20		200J	A1gd
172	1N2033	5	5.8	.75	10m	20	3 0	150J	DO12
173#	RD6B	10	5.8	1 0	40m	8 0	2 0	150S	A164
174#	RD6C	10	5 8	3 0	120m	6 0	2 0	150S	S42
175	1N2042	5	5 8	10	1.0	70	3 0	150J	DO4
176	1N2042C	5	5.8	10	1.0	70		150A	S19a
177#	RD6D	10	5 8	10	400m	1 8	2 0	150S	S103
178	1N377	5	5 9		5.0m	10		150A	A1er
179	652C4	5	5.9	15	5 0m	15	1 7	150A	C3
180▼	BLVA159	3 2	5 9	250m	250u	650	1 3	150A	A9n
181▼	BLVA459	3 2	5 9	250m	250u	400	1 3	150A	A9n
182▼	LVA159	3 3	5 9	400m	250u	200	3 8	150A	DO14
183▼	LVA459	3 3	5 9	400m	250u	100	3 8	150A	DO14
184	1N816		6 0		150m	50		150A	DO7
185	1N2042B	5	6 0		1.0	70		150A	S19a
186	CGD573$		6.0		1.0m			85A	DO7
187	652C5	5	6 0	15	5.0m	13	1 9	150A	C3
188	RS6	10	6 0	15	10m	15	6.0	100A	C1
189	RT6	10	6 0	.15	10m	20	3 0	100A	C1
190#	SZ200-6	15	6 0	.20	10m	30		100A	A138
191	1N762-2	5	6 0	25	10m	18	3 0	150	DO7
192#	1S331	10	6.0	.25	10m	35	3 0	150J	A1ce
193#	1S470	10	6.0	.25	20m	30	1.0	150J	DO7
194#	MZ1006	10	6 0	250m	10m	30		175J	DO7
195	SV124	5	6 0	.25	10m	20 ∅	3 0	150	DO7
196#	SZ6	10	6.0	.25	20m	20	.50	150J	C1f
197#	BZZ10	10	6 0	28	1.0m	280		150J	DO7
198#	1S191	10	6.0	.40	20m	20	3.0	150J	A1ce

SYMBOLS AND CODES EXPLAINED IN INTERPRETER

2. SILICON REFERENCE DIODES

IN ORDER OF (1) REF. VOLTAGE, (2) DISSIPATION, and (3) TYPE No.

LINE No	3 TYPE No.	TOLERANCE 1 20 10 5 2 ± (%)	NOM. REF. VOLT. (V)	2 MAX. DISS. @ 25°C (W)	TEST CUR Izt (A)	MAX. DYN. IMP. (Ω)	TEMP COEFF Tc	MAX. TEMP (°C)	DWG. No
1	MZC6 0A10	†	6.0	400m§	8 3m	30	3 8 △	175J	M468
2	WZ524	5	6 0	40	10m	10		150A	A31e
3	1N5233	20†	6.0	50	20m			200A	DO7
4	1N5233A,B	§∅	6 0	.50	20m	6 0	3.8	200A	DO7
5	MZ92-6 0	†	6 0	500m§	20m		4 1	150J	C103
6	S5233,A,B	xxx	6.0	500m	20m	7 0	3 8	175	DO41
7	1N2033-2	5	6 0	75	10m	20	3 0	150J	DO12
8	SV1007	5	6.0	75	10m	20 ∅	3 0	150	A82f
9	WZ907	5	6.0	75	10m	20 ∅		150A	A1ep
10#	1S480	10	6.0	1 0	40m	30	1 0	150J	A115
11	VR6,A,B	§∅*	6 0	1 0	25m	4 1	2 0	125C	A1ex
12#	SZL6	10	6 0	1.3	100m	2 0		150J	A115
13	2VR6,A,B	§∅*	6 0	2 0	250u	4 0			A3e
14#	1S490	10	6 0	3 0	120m	30	1 0	150J	S112
15	3VR6,A,B	§∅*	6.0	3 0	250m	1 0			A222
16♦	1N5340	20	6.0	5 0	200m			200A	A1ee
17▼	1N5340A	10	6 0	5.0	200m	1 0		200A	A1ee
18▼	1N5340B	5	6.0	5 0	200m	1 0		200A	A1ee
19▼	5ZS6.0,A,B	xxx	6 0	5 0 §	200m	1 0		200A	A1ts
20	1N2042-2	5	6 0	10	1.0	70	3 0	150J	DO4
21	1N3985	5	6 0	10	1 0	70		150S	DO4
22	1N4241	2	6 0	10	350m	50		175S	DO4
23	652C6	5	6 1	15	5 0m	10	2 1	150A	C3
24#	3701	5	6 2		7 5m	15	10	100	A1bu
25#	3702	5	6.2		7 5m	15	20	100	A1bu
26#	3703	5	6 2		7 5m	15	50	100	A1bu
27#	3704	5	6 2		7 5m	15	1 0	100	A1bu
28#	BZX55C6V2	6	6 2		5 0m	10			A1ct
29#	MR62E-H	15	6 2			50			DO7
30	MZ605	5	6 2		7 5m	10		100A	DO7
31	MZ610	5	6 2		7.5m	10		100A	DO7
32	MZ620	5	6 2		7 5m	10		100A	DO7
33	MZ640	5	6 2		7 5m	10		100A	DO7
34#	SA821	5	6 2		7 5m	15	1 0	100A	A254
35#	SA821A	5	6 2		7 5m	10	1 0	100A	A254
36#	SA823	5	6 2		7 5m	15	500m	100A	A254
37#	SA823A	5	6 2		7 5m	10	500m	100A	A254
38#	SA825	5	6 2		7 5m	15	200m	100A	A254
39#	SA825A	5	6 2		7 5m	10	200m	100A	A254
40#	SA827	5	6 2		7 5m	15	100m	100A	A254
41#	SA827A	5	6 2		7.5m	10	100m	100A	A254
42#	SA829	5	6 2		7 5m	15	50m	100A	A254
43#	SA829A	5	6 2		7 5m	10	50m	100A	A254
44#	SB821	5	6 2		7 5m	15	1 0	100A	A255
45#	SB821A	5	6.2		7 5m	10	1 0	100A	A255
46#	SB823	5	6 2		7 5m	15	500m	100A	A255
47#	SB823A	5	6 2		7 5m	10	500m	100A	A255
48#	SB825	5	6 2		7 5m	15	200m	100A	A255
49#	SB825A	5	6 2		7 5m	10	200m	100A	A255
50#	SB827	5	6 2		7 5m	15	100m	100A	A255
51#	SB827A	5	6 2		7 5m	10	100m	100A	A255
52#	SB829	5	6 2		7 5m	15	50m	100A	A255
53#	SB829A	5	6 2		7 5m	10	50m	100A	A255
54#	SC821	5	6 2		7.5m	15	1 0	100A	C116
55#	SC821A	5	6 2		7 5m	10	1 0	100A	C116
56#	SC823	5	6 2		7 5m	15	500m	100A	C116
57#	SC823A	5	6 2		7 5m	10	500m	100A	C116
58#	SC825	5	6 2		7 5m	15	200m	100A	C116
59#	SC825A	5	6 2		7 5m	10	200m	100A	C116
60#	SC827	5	6 2		7 5m	15	100m	100A	C116
61#	SC827A	5	6 2		7 5m	10	100m	100A	C116
62#	SC829	5	6.2		7 5m	15	50m	100A	C116
63#	SC829A	5	6.2		7 5m	10	50m	100A	C116
64#	RZ6 2	5	6 2	.08	5 0m	70 △		150A	C18e
65#	RZZ6 2	5	6 2	08	5 0m	80 △		150A	C18e
66▼#	BZX84C6V2	5	6.2	110m	5 0m	20	3 7	125J	M500
67	652C7	5	6.2	.15	5 0m	7 0	2 6	150A	C3
68#	AZ6 2	5	6 2	15	5 0m	50		170A	DO7
69#	BZ6.2	5	6 2	15	5 0m	20		170A	DO7
70#	RV6 2	5	6.2	15	5 0m	60		150A	C18d
71	USA55191/3-1	5	6 2	.15	10m	5 0	05	125A	M273
72#	Z6.2∅	5	6.2	150m	5 0m	80 △		150A	C18d
73#	ZZ6 2	5	6.2	15	5 0m	80 △		150A	C18d
74	1N429	5	6 2	20	7 5m	20	1 0	150A	C1
75	JAN1N429	5	6 2	20	7 5m	20		100A	C1
76	1N1735	5	6 2	20	7 5m	20	80	150C	A1gp
77#	02Z6 2A	5	6.2	200m	10m	20	4 2	175J	DO35
78	F16H1	10	6.2	.20	5 0m	30	2 5	125S	TO98
79#	OAZ270	20	6 2	23	1 0m	200		150J	A3
80	1/4M6 2AZ,10,5	xxx	6.2	25	10m	15	3 2	175J	A1cy
81	1N709,A	xx	6 2	25	25m	4 1	3 2	175A	DO7
82	1N709B	20	6.2	25	25m	4 1			DO7
83	1N821	5	6.2	.25	7 5m	15	1 △	125A	DO7
84	JAN1N821*	5	6 2	.25	7 5m	15	9 6	175A	A1dd
85	1N822∅	5	6.2	25	7.5m	15	1 △	125A	DO7
86	1N822A∅	5	6.2	.25	7.5m	15	1 0	175	DO7
87	1N823	5	6.2	25	7 5m	15	.5 △	125A	DO7
88	JAN1N823*	5	6.2	25	7 5m	15	4.8	175A	A1dd
89	1N824∅	5	6 2	25	7 5m	15	5 △	125A	DO7
90	1N824A∅	5	6 2	25	7.5m	15	50	175	DO7
91	1N825	5	6.2	25	7.5m	15	.2 △	125A	DO7
92	JAN1N825*	5	6 2	25	7 5m	15	1.9	175A	A1dd
93	1N827	5	6 2	25	7 5m	15	1 △	125A	DO7
94	JAN1N827*	5	6.2	25	7.5m	15	90	175A	A1dd
95	1N829	5	6.2	25	7 5m	15	05	150S	DO7
96	JAN1N829*	5	6.2	25	7 5m	15	50	175A	A1dd
97	1N829A	5	6.2	25	7 5m	10	05	150S	DO7
98	1N3496	5	6.2	25	7 5m	15	05	150S	DO7
99	1N3497	5	6 2	25	7 5m	15	10	150S	DO7
100	1N3498	5	6 2	25	7.5m	15	20	150S	DO7
101	1N3499	5	6.2	.25	7 5m	15	50	150S	DO7
102	1N3500	5	6.2	25	7.5m	15	1 0	150S	DO7
103	1N4627	5	6.2	25	25m	1 2k		200	DO14
104	1N4691	5	6 2	25	05m			200A	DO14
105#	9974	5	6 2	25	10m	30	3 0	150J	C18f
106▼	BLVA162	3.2	6 2	250m	250u	350	387m	150A	A9n
107▼	BLVA462	3.2	6 2	250m	250u	250	387m	150A	A9n
108#	BZY83C6V2	5	6 2	25	5 0m	40	6 △	150J	C1g

LINE No	3 TYPE No	TOLERANCE 1 20 10 5 2 ± (%)	NOM REF. VOLT. (V)	2 MAX DISS @ 25°C (W)	TEST CUR Izt (A)	MAX. DYN. IMP. (Ω)	TEMP. COEFF Tc	MAX. TEMP (°C)	DWG. No.
109#	BZY85C6V2	5	6.2	.25 §	5 0m	10	6 △	150J	A171f
110	GLA62,A,B	xxx	6.2	.25	1 0m	40	2.2	175	DO7
111#	HS2062	5	6.2	.25	5.0m			175A	DO7
112	IDAZ824,A,B,C∅	xxxx	6 2	250m	7.5m	15	500m△	175	A1hc
113#	KS2062A	5	6 2	250m	5.0m	40	5.0 △	150A	DO7
114#	KS2062B	10	6.2	250m	5.0m	75	6.0 △	150A	DO7
115	LAC2005	10	6 2	250m	1 0m	50			M520a
116	MGLA62,A,B	xxx	6.2	25	1.0m	40	2 2	150	A2
117#	MR62C-H	5	6 2	25	5.0m	30		250	DO7
118	MZ4627	∅	6.2	250m	250u	1 2k		200J	DO7
119	PD6009,A	xx	6.2	25	5.0m	50		150	A109
120	PD6050	5	6 2	25	10m	5 0		150	A2c
121	PD6205	10	6 2	250m	1.0m	50			A109
122	SVM61	5	6.2	.25	7 5m	50	1 0	100R	DO7
123	SVM605	5	6.2	.25	7.5m	50	50	100R	DO7
124	SVM6010	5	6.2	25	7.5m	30	10	100R	DO7
125	SVM6011	5	6 2	25	7.5m	15	10	100R	DO7
126	SVM6020	5	6.2	.25	7 5m	30	20	100R	DO7
127	SVM6021	5	6.2	.25	7.5m	15	20	100R	DO7
128#	OAZ243	5	6.2	278m	1 0m	200 ∅	5 0	150J	A24c
129#	BZY59	5	6.2	.28	1 0m	200		150J	A1
130#	BZY66	15	6 2	.28	1 0m	200		150J	A3
131	MC6008,A	xx	6 2	30	10m	10		175	A2m
132	OAZ203	5	6.2	.30	1 0m	280	81	150J	C1c
133	OAZ210	15	6 2	30	1 0m	280	81	150J	C1c
134#	Z1D6 2	∅∅§§	6 2	3 §		50		150J	C29
135#	Z1A6.2	1	6.2	320m	5 0m	10	7 0 △	150A	C29
136#	Z1B6 2	5	6 2	320m	5.0m	10	7.0 △	150A	C29
137#	Z1C6.2	10	6 2	320m	5 0m	10	7 0 △	150A	C29
138	LDZ70/6A2	5	6 2	360m	20m	7 0		150J	M401
139▼#	1A62	5	6.2	400m	20m	7.0	4 5	200J	A159
140	1N675	5	6 2	40	20m	3.0	3 0	200S	A31b
141#	1N753	10	6 2	400m	20m	7.0	2 2	175A	A1
142#	1N753A	5	6 2	400m	20m	7.0	2 2	175A	A1
143	JAN1N753A	5	6 2	400m	20m	3 0	4 5	175A	A1dd
144	1N821A	5	6.2	40	7.5m	10	1 0	175	DO7
145	1N823A	5	6 2	40	7 5m	10	50	175	DO7
146	1N825A	5	6 2	40	7 5m	10	.20	175	DO7
147	1N827A	5	6 2	40	7 5m	10	.10	175	DO7
148	1N3513	5	6 2	.40	20m	3 0	2 2	200A	DO7
149	1N4010	5	6 2	.40	7 5m	15	1 0	100	A1cw
150	JAN1N4627	5	6 2	400m	250u	1 2k	5.0 △	175A	A1sx
151	1N5525	20	6 2	400m§	1 0m			175A	DO7
152	1N5525A	10	6.2	400m§	1 0m			175A	DO7
153	1N5525B	5	6 2	400m§	1.0m	30		175A	DO7
154▼	JAN1N5525B	5	6 2	400m	1.0m	30	5 0	200A	DO14
155	1N5525C	2	6 2	400m§	1 0m	30		175A	DO7
156	1N5525D	1	6 2	400m§	1 0m	30		175A	DO7
157▼	1N5731B	5	6 2	400m	10m	10	3.7	200J	DO35
158#	1S2062	10	6.2	.40	5 0m	75	3.0	150A	A1
159#	1S2062A	5	6 2	40	5.0m	40	3 0	150A	A1
160#	1S7062,B	x15	6 2	40	5 0m	75	3 0	150A	A1
161#	1S7062A	5	6 2	40	5 0m	40	3.0	150A	A1
162	6.2SR1	5	6.2	40	7 5m	15	1.0	175A	A1de
163	6.2SR1A	5	6 2	40	7 5m	10	1.0	175A	A1de
164	6 2SR2	5	6 2	40	7 5m	15	.50	175A	A1de
165	6 2SR2A	5	6 2	40	7 5m	10	.50	175A	A1de
166	6.2SR3	5	6 2	40	7.5m	15	.20	175A	A1de
167	6.2SR3A	5	6 2	.40	7.5m	10	20	175A	A1de
168	6.2SR4	5	6.2	40	7 5m	15	.10	175A	A1de
169	6.2SR4A	5	6.2	.40	7.5m	10	10	175A	A1de
170#	5515	5	6 2	.40	5.0m	10	2 0	125A	A1ce
171#	BZX46C6V2	5	6.2	400m	20	3 5	4 5	175J	DO35
172▼#	BZX71B6V2	2	6 2	400m§	5.0m	15		175J	DO35
173#	BZX71C6V2	5	6 2	400m§	5.0m	35		200S	A9m
174#	BZX74C6V2	5	6 2	400m	25m	200	3.2		A31e
175#	BZX79C6V2	5	6.2	400m	5.0m	10		200J	A257
176#	BZX83C6V2	5	6 2	400m	5.0m	10	3.5	150J	DO35
177▼#	BZY85B6V2	2	6 2	400m	5.0m	35	1 5	150J	DO7
178#	BZY88C6V2	5	6.2	.40	5 0m	7.0 ∅		150	DO7
179	C4011	10	6 2	.40	20m	6 0		175	A134a
180	C6109	10	6 2	40	5 0m	10 ∅		175	M185
181	C6109A	5	6.2	.40	5.0m	10 ∅		175	M185
182	CZF6 2D,10,5	xxx	6 2	.40 ∅	250u	1.2k	3 0	175J	M452
183	CZG6.2D,10,5	xxx	6 2	.40 ∅	20m	7.0	4 9	175J	M452
184#	HS7062	5	6 2	.40	5.0m			175A	DO7
185#	KS062A	5	6.2	40	5 0m	35	7.5 △	150A	DO7
186#	LR62CH	5	6 2	.40	5 0m	30	2 6	150S	DO7
187▼	LVA162	3 2	6 2	400m	250u	200	4.3	150A	DO14
188▼	LVA462	3.2	6 2	400m	250u	100	4.3	150A	DO14
189	M4Z6.2,A,-20	xx*	6 2	.40	20m	12		150A	A1kk
190#	M6.2Z	5	6 2	400m	5.0m	300	3 2		A31e
191	MACZF6 2D,10,5	xxx	6.2	.40 ∅	250u	1.2k	3.0	175J	M453
192	MACZG6.2D,10,5	xxx	6.2	.40 ∅	20m	7.0	4 9	175J	M453
193	MBCZF6 2D,10,5	xxx	6 2	400m∅	250u	1 2k	3 0	175J	M454
194	MBCZG6 2D,10,5	xxx	6.2	40 ∅	20m	7 0	4 9	175J	M454
195	MCCZF6 2D,10,5	xxx	6 2	400m∅	250u	1 2k	3.0	175J	M455
196	MCCZG6 2D,10,5	xxx	6 2	40 ∅	20m	7 0	4.9	175J	M455
197	MDCZF6 2D,10,5	xxx	6 2	40 ∅	250u	1.2k	3.0	150A	M410
198	MDCZG6 2D,10,5	xxx	6 2	.40 ∅	20m	7.0	4.9	150A	M410
199	ME1Z821	5	6 2	400m	7.5m	15	1 0	150J	M489
200	ME1Z821A	5	6.2	400m	7.5m	10	1 0	150J	M489
201	ME1Z823	5	6 2	400m	7.5m	15	500m	150J	M489
202	ME1Z823A	5	6 2	400m	7.5m	10	500m	150J	M489
203	ME1Z825	5	6.2	400m	7.5m	15	200m	150J	M489
204	ME1Z825A	5	6.2	400m	7 5m	10	200m	150J	M489
205	ME1Z827	5	6.2	400m	7.5m	15	100m	150J	M489
206	ME1Z827A	5	6.2	400m	7.5m	10	100m	150J	M489

SYMBOLS AND CODES EXPLAINED IN INTERPRETER

2. SILICON REFERENCE DIODES

IN ORDER OF (1) REF. VOLTAGE, (2) DISSIPATION, and (3) TYPE No.

LINE No	TYPE No.	TOLERANCE 20 10 5 2 ± (%)	NOM. REF. VOLT. (V)	MAX. DISS. @ 25°C (W)	TEST CUR. Izt (A)	MAX. DYN. IMP. (Ω)	TEMP. COEFF Tc	MAX. TEMP (°C)	DWG. No.
1	ME1Z829	5	6 2	400m	7 5m	15	50m	150J	M489
2	MZ500-11	10	6 2	4 §	20m	10 Ø	4.5	175J	DO7
3	MZC6.2A10	†	6.2	400m§	8 1m	31	4 5 △	175J	M468
4	MZC6.2B10	§†	6 2	400m§	250u	1 2k		175J	M468
5#	Z5A6 2	1	6 2	400m§	5 0m	25	7 0 △	200J	A1hs
6#	Z5B6 2	5	6 2	400m§	5 0m	25	7 0 △	200J	A1hs
7#	Z5C6 2	10	6 2	400m§	5 0m	25	7 0 △	200J	A1hs
8#	Z5D6.2	15	6 2	400m§	5 0m	25	7 0 △	200J	A1hs
9#	ZF6 2	5	6.2	400m	5 0m	10	2 0	150J	DO7
10#	ZP6 2	5	6 2	400m	5.0m	10	3 0	150J	DO7
11	1/2Z6 2T5	5	6.2	50	20m	6 0		175	A94f
12	1N3411	10	6 2	50	1 0m	400	1 9	200A	P5
13	1N5234	20†	6 2	50	20m			200A	DO7
14	1N5234A,B	§Ø	6.2	50	20m	3 0	4 5	200A	DO7
15▼	HEPZ0214-RT								
		10	6 2	500m	20	14			C103
16	MTZ608,A	xx	6 2	50	10m	10		175A	A60e
17	MZ92-6 2	†	6 2	500m§	20m		4 3	150J	C103
18	PS1325	5	6 2	.5 §	1 0m	500	50	175S	A9b
19	PS8908	5	6 2	.50	20m	3 0	3.5	150	A60p
20	S5234,A,B	xxx	6 2	500m	20m	7.0	4.5	175	DO41
21	SVC625	5	6.2	.50	7 5m	15	10	175	DO7
22	SVC650	5	6 2	50	7 5m	15	10	175	DO7
23#	ZOD6.2	15	6.2	50	70m	20	0.0	150J	A1ef
24#	ZSF6 2	1	6 2	500m	7 0m	10	1 0	150S	M487a
25#	ZOA6.2	1	6.2	520m	5 0m	8 0	7 0 △	150J	A1ef
26#	ZOB6 2	5	6 2	520m	5 0m	8 0	7 0 △	150J	A1ef
27#	ZOC6 2	10	6 2	520m	5 0m	8 0	7 0 △	150J	A1ef
28	LVA62A	5	6 2	600m	1 0m	50			DO14
29	LVA62B	2	6 2	600m	1 0m	50			DO14
30	LVA362A	5	6.2	600m	1 0m	45			DO14
31	LVA362B	2	6 2	600m	1.0m	45			DO14
32#	UZ6 2	10	6 2	.60	97m	4 0	4 0	135A	DO3
33#	ZW6 2	5	6 2	600m	5 0m	10	2 0	150J	A1bg
34	MC6108,A	xx	6 2	75	25m	10		175	A2d
35	MMZ6 2,A,-20								
		xx*	6 2	75	20m	12		150A	A1kk
36	MZ6.2T20,10,5								
		xxx	6 2	.75	26m	10	3 0	165A	A152
37	1D6 2A,B	xx	6 2	1.0	41m	2 0		150A	A1cn
38	1N1485§	5	6 2	1 0	20m	5.0 Ø	3 0	200A	A154
39	1N1766,A	xx	6 2	1 0	100m	1.5		175S	DO13
40	1N3828	10	6 2	1 0	41m	2 0	3.5	175A	A31a
41	1N3828A	5	6 2	1 0	41m	2.0	3 5	175A	A31a
42	JAN1N3828A	5	6.2	1 0	41m	2 0	5.0	175A	A31c
43	1N4499	5	6 2	1 0	7 5m	20		275A	DO7
44	1N4656	5	6.2	1 0	41m	600	4 5	200A	DO15
45	1N4735,A	xx	6 2	1 0	41m	2 0		200A	A1ay
46	1Z6.2,A,B	xxx	6 2	1.0	41m	2 0		150	A1ay
47	1Z6.2T20,10,5								
		xxx	6.2	1 0	35m	10	3 0	165A	A89c
48#	1ZC6 2T10,5								
		xx	6 2	1 0	35m	9 0	4 0	165A	A31p
49#	18Z6F,AF	12,6	6 2	1 0	10m	20	6.0	150J	DO13
50#	BZX29C6V2	5	6 2	1 0	50m	2 0	3 5	175J	A1cd
51♦	BZX85C6V2	5	6 2	1 0	35m	4 0	3 8	150A	DO15
52	CD31-00008	5	6 2	1.0	41m	2 0	2 5	200A	A1ce
53	CD31-12015	5	6 2	1 0	41m	3 0			
54	CZ6 2	†	6 2	1 0	60m	8 0	3 5	175	DO15
55	EVR5,A,B	xxx	6 2	1 0	40m	10		175A	DO27
56#	FPZ6V2	5	6 2	1 0	40m	400	3 5		A31h
57	G6 2T20,10,5								
		xxx	6 2	1.0	41m	3.0	4 0	175A	DO15
58#	GZ6 2	5	6 2	1 0	25m	25 △		150A	S115
59▼	HEP103-RT	10	6 2	1 0	41	3.0			DO41
60	JZ6.2,A,B,D								
		xxxx	6 2	1 0	41m	2 0	3 5	175	DO15
61	JZ6 2C	∅	6 2	1 0	41m	2 0	3 5	175	DO15
62	LPM6.2,A,-20								
		xx*	6 2	1.0	41m	2 0		150A	A1kk
63	SZ6 2	xxxx	6 2	1 0	20m	2 0 Ø	1 8	150A	A3g
64	VR6 2,A,B	xxx	6 2	1 0	41m	2.0		125A	A1b
65#	Z2A62F	20§Ø	6 2	1 0	20m	19	3 0	100J	A141
66#	Z4A6.2	1	6.2	1.0	100m	2.0	7 0 △	150J	A1ef
67#	Z4B6 2	5	6 2	1 0	100m	2 0	7.0 △	150J	A1ef
68#	Z4C6 2	10	6 2	1 0	100m	2 0	7 0 △	150J	A1ef
69#	Z4D6.2	15	6 2	1.0	100m	2 0	7 0 △	150J	A1ef
70	Z4XL6.2,B	xx	6 2	1 0	20m	9 0	3 0	165A	DO13
71	Z6 2,A,B,D	xxxx	6 2	1.0	41m	2 0	3 5	175	DO27
72	Z6 2C	∅	6 2	1 0	41m	2 0	3 5	175	DO27
73	ZD6 2A,B	xx	6.2	1.0	41m	2 0		175A	A1cm
74	ZM6.2,A,B,D								
		xxxx	6 2	1 0	41	2 0	3 5	175	DO41
75	ZM6 2C	∅	6.2	1 0	41	2.0	3.5	175	DO41
76#	7715	5	6 2	1 1	100m	3 0	2 0	125A	A1bu
77#	BZY92C6V2	5	6 2	1.1	100m	2 0	2 0	150J	DO13
78#	ZD6 2	5	6 2	1 3	100	2 0	3 0	150J	DO13
79#	ZY6.2	5	6 2	1.3	100	2 0	3 0	150J	A1bg
80	1N4460	5	6 2	1 5	40m	4 0		175A	A196
81	JAN1N4460	10	6 2	1 5	40m	4 0	5 0	175A	A1v
82#	BZY74	15	6 2	1 5	20m			150J	DO4
83#	BZY96C6V2	5	6 2	1 5	100m	3 0	2 0	175J	DO1
84	MC6308,A	xx	6 2	1 5	100m	8 0			A1q
85	MZ1000-8	10	6 2	1 5 §	41m	3 0 Ø	4 5	175J	A1ay
86#	SZ62A	5	6 2	1 5	20m	12	4 0	160A	A26
87#	Z2A6 2	1	6 2	1 5	100m	2 0	7 0 △	150J	A244
88#	Z2B6 2	5	6 2	1 5	100m	2 0	7 0 △	150J	A244
89#	Z2C6 2	10	6 2	1 5	100m	2 0	7 0 △	150J	A244
90#	Z2D6 2	∅Ø§§	6 2	1 5		2 0		150J	A6b
91#	Z3A6 2	1	6.2	1 5	100m	2 0	7 0 △	150J	S4f
92#	Z3B6.2	5	6 2	1 5	100m	2 0	7 0 △	150J	S4f
93#	Z3B62CF	20§Ø	6 2	1 5	20m	7 0	4 0	175J	DO1
94#	Z3C6 2	10	6.2	1 5	100m	2 0	7 0 △	150J	S4f
95#	Z3D6 2	∅Ø§§	6 2	1 5	50m	2 0		150J	S4f
96#	58Z6,A	12,6	6 2	1 8	100m	10	50	150J	DO4
97	2VR6 2,A,B	xxx	6 2	2 0	81m	2 0			A3e
98#	BZZ15	10	6 2	2 0	20m	6 0		150J	DO4
99	LMZ6 2,A,-20								
		xx*	6 2	2 0	80m	4 5		150A	A1kk
100	1N5015,A	xx	6 2	2 5	101m	3 0	4 9	150	A1gn
101	3TZ6 2,A,B,D								
		xxxx	6 2	3 0	150m	2 5		175	A1ec
102	3TZ6.2C	∅	6 2	3 0	150m	2 5		175	A1ec
103	3VR6 2,A,B	xxx	6 2	3.0	.25	1 0			A222
104	3T6.2,A,B	xx*	6 2	3 5	100m	1.5			DO4
105	3Z6 2T20,10,5								
		xxx	6 2	3 5	110m	3 0	3 0	165	DO4
106♦	1N5341	20	6 2	5 0	200m			200A	A1ee
107▼	1N5341A	10	6.2	5.0	200m	1 0		200A	A1ee
108▼	1N5341B	5	6 2	5 0	200m	1.0		200A	A1ee
109▼	5ZS6 2,A,B	xxx	6 2	5 0 §	200m	1 0		200A	A1ts
110#	9984	5	6 2	5 0	10	3 0	3 0	150J	A9h
111	1N1483§	5	6 2	10	200m	2 0 Ø	3 0	175C	S154
112	1N1804,A	xx	6 2	10	1	1 0		175A	S11
113	1N1804B	20	6 2	10	1	1 0			S11e
114	1N1804C,CAØ								
		xx	6 2	10 §	1 0	1 0		175J	S19a
115	1N3986	5	6 2	10	805m	1 5		150S	DO4
116	1N3998,A	xx	6 2	10	405m	1 1		175S	DO4
117	JAN1N3998A,RA								
		5	6 2	10 §	.41	1.1	4 5	150A	DO4
118	10Z6 2T20,10,5								
		xxx	6.2	10	350m	.75	3 0	165	DO4
119#	OAZ223	5	6 2	10	20m	6 0		150J	DO4
120#	OAZ290	15	6.2	10	20m	2 2 Ø	3 4	150	DO4
121#	9994	5	6 2	15	50	50	3 0	150J	S87
122#	78Z6,A	12,6	6 2	25	400m	1 2	6.0	150J	S179
123#	ZX6 2	5	6.2	25 ∅	100	2 0	3 0	150J	M41
124	1N4554,A,B	xxx	6 2	50	2 0	14	4 9	175J	DO5
125	JAN1N4554B,RB								
		5	6 2	50	2	14	4.9	150	DO5
126	1N4562,A,B	xxx	6.2	50	2.0	.14	4 9	175J	C5a
127#	9605	5	6 2	12k	100m	2 0k	150		C29j
128#	VR625F	5	6 25	2 2	20m	4 0		200S	DO3
129#	VR625E	5	6.25	5.8	20m	4.0		200S	DO4
130	MC6400A	xxx	6 28	25	7 5m	15	1 0	75R	M277c
131	MC6400B	xxx	6 28	25	7 5m	15	1 0	75R	A188
132	MC6401A	xxx	6.28	25	7 5m	15	1 0	100R	M277c
133	MC6401B	xxx	6 28	25	7 5m	15	1.0	100R	A188
134	MC6402A	xxx	6.28	25	7 5m	15	.50	75R	M277c
135	MC6402B	xxx	6.28	25	7 5m	15	.50	75R	A188
136	MC6403A	xxx	6.28	25	7.5m	15	50	100R	M277c
137	MC6403B	xxx	6 28	25	7 5m	15	.50	100R	A188
138	MC6404A	xxx	6 28	25	7.5m	15	20	75R	M277c
139	MC6404B	xxx	6 28	.25	7 5m	15	20	75R	A188
140	MC6405A	xxx	6.28	25	7.5m	15	20	100R	M277c
141	MC6405B	xxx	6 28	25	7.5m	15	20	100R	A188
142	MC6406A	xxx	6 28	25	7 5m	15	10	75R	M277c
143	MC6406B	xxx	6 28	25	7 5m	15	.10	75R	A188
144	MC6407A	xxx	6 28	.25	7 5m	15	10	100R	M277c
145	MC6407B	xxx	6 28	.25	7.5m	15	10	100R	A188
146	MC6424A	xxx	6.28	25	7 5m	15	.05	75R	M277c
147	MC6424B	xxx	6.28	25	7.5m	15	.10	75R	A188
148	MC6425A	xxx	6.28	.25	7.5m	15	05	100R	M277c
149	MC6425B	xxx	6 28	.25	7.5m	15	.10	100R	A188
150	MC6400C	xxx	6 28	40	7.5m	15	1.0	75R	A1as
151	MC6401C	xxx	6.28	40	7 5m	15	1 0	100R	A1as
152	MC6402C	xxx	6.28	.40	7.5m	15	50	75R	A1as
153	MC6403C	xxx	6 28	40	7 5m	15	50	100R	A1as
154	MC6404C	xxx	6.28	.40	7.5m	15	20	75R	A1as
155	MC6405C	xxx	6.28	40	7.5m	15	20	100R	A1as
156	MC6406C	xxx	6 28	40	7 5m	15	10	75R	A1as
157	MC6407C	xxx	6 28	40	7 5m	15	10	100R	A1as
158	MC6424C	xxx	6.28	400m	7 5m	15	50m	75R	A1as
159	MC6425C	xxx	6.28	400m	7 5m	15	50m	100R	A1as
160	652C8	5	6 3	.15	5.0m	6 0	3 0	150A	C3
161	1N3553	3 2	6 3	25	7 5m	15	4 9	200S	DO7
162	1N5629		6 3	1 0	10m		5 7	175A	DO13
163	1N3501	2	6.35		7 5m	12	10	125	DO7
164	1N3502	2	6.35		7 5m	12	05	125	DO7
165	1N3503	2	6 35		7 5m	12	.10	125	DO7
166	1N3503A	2	6 35		7 5m	12	05	125	DO7
167	1N3504	2	6.35		7 5m	12	10	125	DO7
168	1N3504A	2	6 35		7 5m	12	05	125	DO7
169	1N4890	5	6.35	.40	7 5m	10	10	175	DO7
170	1N4890A	5	6 35	40	7.5m	10	10	175	DO7
171	1N4891	5	6 35	.40	7.5m	10	05	175	DO7
172	1N4891A	5	6.35	40	7.5m	10	.05	175	DO7
173	1N4892	5	6.35	.40	7 5m	10	10	175	DO7
174	1N4892A	5	6 35	40	7 5m	10	10	175	DO7
175	1N4893	5	6.35	.40	7.5m	10	05	175	DO7
176	1N4893A	5	6.35	40	7 5m	10	.05	175	DO7
177	1N4894	5	6 35	.40	7.5m	10	10	175	DO7
178	1N4894A	5	6 35	.40	7 5m	10	10	175	DO7
179	1N4895	5	6 35	.40	7 5m	10	05	175	DO7
180	1N4895A	5	6 35	40	7.5m	10	05	175	DO7
181	1N4565B		6.4		50m	200	1 0	150	DO7
182	1N4566B		6 4		.50m	200	50	150	DO7
183	1N4567B		6 4		50m	200	20	150	DO7
184	1N4568B		6 4		50m	200	10	150	DO7
185	1N4569B		6 4		50m	200	.05	150	DO7
186	1N4570B		6 4		1 0m	100	1 0	150	DO7
187	1N4571B		6 4		1.0m	100	50	150	DO7
188	1N4572B		6 4		1 0m	100	20	150	DO7
189	1N4573B		6 4		1 0m	100	10	150	DO7
190	1N4574B		6 4		1 0m	100	05	150	DO7
191	1N4575B		6 4		2.0m	50	1 0	150	DO7
192	1N4576B		6 4		2.0m	50	50	150	DO7
193	1N4577B		6 4		2 0m	50	20	150	DO7
194	1N4578B		6 4		2 0m	50	10	150	DO7
195	1N4579B		6 4		2 0m	50	05	150	DO7
196	1N4580B		6 4		4 0m	25	1 0	150	DO7
197	1N4581B		6 4		4 0m	25	50	150	DO7
198	1N4582B		6 4		4.0m	25	20	150	DO7
199	1N4583B		6 4		4.0m	25	10	150	DO7
200	1N4584B		6 4		4 0m	25	05	150	DO7
201	C6330	5	6 4		1 0m	100	10	75	M185d
202	C6330A	5	6 4		1.0m	100	10	100	M185d
203	C6331	5	6 4		1.0m	100	5.0	75	M185d
204	C6331A	5	6 4		1 0m	100	5 0	100	M185d

SYMBOLS AND CODES EXPLAINED IN INTERPRETER

2. SILICON REFERENCE DIODES

IN ORDER OF (1) REF. VOLTAGE, (2) DISSIPATION, and (3) TYPE No.

LINE No	3 TYPE No.	TOLERANCE 1 20 10 5 2 ± (%)	NOM REF. VOLT. (V)	2 MAX. DISS. @ 25°C (W)	TEST CUR. Izt (A)	MAX. DYN. IMP. (Ω)	TEMP. COEFF Tc	MAX. TEMP (°C)	DWG. No
1	C6332	5	6.4		1 0m	100	2 0	75	M185d
2	C6332A	5	6 4		1.0m	100	2 0	100	M185d
3	WZ3000	3	6.4		7.5m	15	50	100	DO7
4	WZ3000A	3	6.4		7 5m	15	10	100	DO7
5	WZ3000B	3	6 4		7 5m	15	20	100	DO7
6	WZ3001	3	6 4		7 5m	15	50	100	DO7
7	WZ3001A	3	6.4		7 5m	15	10	100	DO7
8	WZ3001B	3	6 4		7 5m	15	20	100	DO7
9	WZ3002	3	6 4		7.5m	15	50	100	DO7
10	WZ3002A	3	6 4		7 5m	15	10	100	DO7
11	WZ3002B	3	6 4		7 5m	15	20	100	DO7
12	WZ3003	3	6 4		7.5m	15	50	100	DO7
13	WZ3003A	3	6 4		7.5m	15	10	100	DO7
14	WZ3003B	3	6 4		7.5m	15	.20	100	DO7
15	WZ3004	3	6 4		7.5m	15	50	100	DO7
16	WZ3004A	3	6.4		7 5m	15	10	100	DO7
17	WZ3004B	3	6 4		7 5m	15	20	100	DO7
18	WZ3005	3	6 4		7 5m	15	50	100	DO7
19	WZ3005A	3	6 4		7 5m	15	10	100	DO7
20	WZ3005B	3	6 4		7 5m	15	20	100	DO7
21	652C9	5	6 4	15	5 0m	5 0	3 2	150A	C3
22	1N4565	5	6 4	40	50m	200	1 △	75R	DO7
23	1N4565A	5	6 4	40	50m	200	1 △	100R	DO7
24	1N4566	5	6.4	40	50m	200	5 △	75R	DO7
25	1N4566A	5	6 4	40	50m	200	5 △	100R	DO7
26	1N4567	5	6 4	40	50m	200	2 △	75R	DO7
27	1N4567A	5	6 4	.40	50m	200	2 △	100R	DO7
28	1N4568	5	6 4	40	50m	200	1 △	75R	DO7
29	1N4568A	5	6 4	40	50m	200	1 △	100R	DO7
30	1N4569	5	6 4	40	50m	200	05 △	75R	DO7
31	1N4569A	5	6 4	40	50m	200	05 △	100R	DO7
32	1N4570	5	6 4	.40	1.0m	100	1 △	75R	DO7
33	1N4570A	5	6 4	40	1.0m	100	1 △	100R	DO7
34	1N4571	5	6 4	40	1 0m	100	5 △	75R	DO7
35	1N4571A	5	6 4	40	1 0m	100	.5 △	100R	DO7
36	1N4572	5	6 4	40	1 0m	100	2 △	75R	DO7
37	1N4572A	5	6 4	40	1 0m	100	.2 △	100R	DO7
38	1N4573	5	6 4	40	1 0m	100	1 △	75R	DO7
39	1N4573A	5	6 4	40	1 0m	100	.1 △	100R	DO7
40	1N4574	5	6 4	40	1 0m	100	.05 △	75R	DO7
41	1N4574A	5	6 4	40	1 0m	100	05 △	100R	DO7
42	1N4575	5	6 4	40	2 0m	50	1 △	75R	DO7
43	1N4575A	5	6 4	40	2.0m	50	1 △	100R	DO7
44	1N4576	5	6 4	40	2 0m	50	5 △	75R	DO7
45	1N4576A	5	6 4	40	2.0m	50	5 △	100R	DO7
46	1N4577	5	6 4	40	2 0m	50	.2 △	75R	DO7
47	1N4577A	5	6 4	40	2 0m	50	.2 △	100R	DO7
48	1N4578	5	6 4	40	2 0m	50	1 △	75R	DO7
49	1N4578A	5	6.4	40	2 0m	50	1 △	100R	DO7
50	1N4579	5	6 4	40	2 0m	50	05 △	75R	DO7
51	1N4579A	5	6.4	40	2 0m	50	05 △	100R	DO7
52	1N4580	5	6 4	40	4 0m	25	1 △	75R	DO7
53	1N4580A	5	6 4	40	4 0m	25	1 △	100R	DO7
54	1N4581	5	6.4	40	4 0m	25	5 △	75R	DO7
55	1N4581A	5	6.4	40	4.0m	25	.5 △	100R	DO7
56	1N4582	5	6.4	40	4.0m	25	2 △	75R	DO7
57	1N4582A	5	6 4	40	4 0m	25	2 △	100R	DO7
58	1N4583	5	6 4	40	4.0m	25	1 △	75R	DO7
59	1N4583A	5	6 4	40	4.0m	25	1 △	100R	DO7
60	1N4584	5	6.4	40	4.0m	25	05 △	75R	DO7
61	1N4584A	5	6 4	40	4 0m	25	05 △	100R	DO7
62	ME1Z4565	5	6 4	400m	500u	200	1 0	75J	M489
63	ME1Z4565A	5	6 4	400m	500u	200	1 0	100J	M489
64	ME1Z4566	5	6 4	400m	500u	200	500m	75J	M489
65	ME1Z4566A	5	6.4	400m	500u	200	500m	100J	M489
66	ME1Z4567	5	6 4	400m	500u	200	200m	75J	M489
67	ME1Z4567A	5	6 4	400m	500u	200	200m	100J	M489
68	ME1Z4568	5	6 4	400m	500u	200	100m	75J	M489
69	ME1Z4568A	5	6 4	400m	500u	200	100m	100J	M489
70	ME1Z4569	5	6 4	400m	500u	200	50m	75J	M489
71	ME1Z4569A	5	6 4	400m	500u	200	50m	100J	M489
72	ME1Z4570	5	6.4	400m	1 0m	100	1 0	75J	M489
73	ME1Z4570A	5	6 4	400m	1.0m	100	1 0	100J	M489
74	ME1Z4571	5	6 4	400m	1 0m	100	500m	75J	M489
75	ME1Z4571A	5	6 4	400m	1 0m	100	500m	100J	M489
76	ME1Z4572	5	6 4	400m	1 0m	100	200m	75J	M489
77	ME1Z4572A	5	6 4	400m	1 0m	100	200m	100J	M489
78	ME1Z4573	5	6.4	400m	1 0m	100	100m	75J	M489
79	ME1Z4573A	5	6 4	400m	1.0m	100	100m	100J	M489
80	ME1Z4574	5	6 4	400m	1 0m	100	50m	75J	M489
81	ME1Z4574A	5	6.4	400m	1 0m	100	50m	100J	M489
82	ME1Z4575	5	6 4	400m	2.0m	50	1 0	75J	M489
83	ME1Z4575A	5	6 4	400m	2 0m	50	1 0	100J	M489
84	ME1Z4576	5	6 4	400m	2 0m	50	500m	75J	M489
85	ME1Z4576A	5	6 4	400m	2 0m	50	500m	100J	M489
86	ME1Z4577	5	6 4	400m	2.0m	50	200m	75J	M489
87	ME1Z4577A	5	6 4	400m	2 0m	50	200m	100J	M489
88	ME1Z4578	5	6 4	400m	2 0m	50	100m	75J	M489
89	ME1Z4578A	5	6 4	400m	2 0m	50	100m	100J	M489
90	ME1Z4579	5	6 4	400m	2 0m	50	50m	75J	M489
91	ME1Z4579A	5	6 4	400m	2 0m	50	50m	100J	M489
92	ME1Z4580	5	6 4	400m	4 0m	25	1.0	75J	M489
93	ME1Z4580A	5	6 4	400m	4 0m	25	1 0	100J	M489
94	ME1Z4581	5	6 4	400m	4 0m	25	500m	75J	M489
95	ME1Z4581A	5	6.4	400m	4 0m	25	500m	100J	M489
96	ME1Z4582	5	6 4	400m	4 0m	25	200m	75J	M489
97	ME1Z4582A	5	6 4	400m	4.0m	25	200m	100J	M489
98	ME1Z4583	5	6 4	400m	4 0m	25	100m	75J	M489
99	ME1Z4583A	5	6 4	400m	4 0m	25	100m	100J	M489
100	ME1Z4584	5	6 4	400m	4.0m	25	50m	75J	M489
101	ME1Z4584A	5	6 4	400m	4.0m	25	50m	100J	M489
102	PS3535	5	6 4	40	1 0m	100	1.0	175S	DO7
103	PS3535A	5	6 4	.40	1 0m	70	1 0	175S	DO7
104	PS3536	5	6 4	40	1 0m	100	50	175S	DO7
105	PS3536A	5	6 4	40	1 0m	70	50	175S	DO7
106	PS3537	5	6 4	40	1.0m	100	20	175S	DO7
107	PS3537A	5	6 4	40	1 0m	70	.20	175S	DO7
108	PS3538	5	6 4	40	1 0m	100	10	175S	DO7
109	PS3538A	5	6.4	40	1 0m	70	.10	175S	DO7
110	PS3539	5	6 4	40	1 0m	100	.05	175S	DO7

LINE No.	3 TYPE No	TOLERANCE 1 20 10 5 2 ± (%)	NOM. REF. VOLT (V)	2 MAX. DISS. @ 25°C (W)	TEST CUR. Izt (A)	MAX. DYN. IMP. (Ω)	TEMP. COEFF Tc	MAX. TEMP (°C)	DWG. No.
111	PS3539A	5	6.4	40	1 0m	70	05	175S	DO7
112	1N2043A	5	6.5		1	80		150A	S19a
113	MC70	x	6.5		10m	12			M409b
114#	ZS7Ø	5	6 5		5.0m	30	500m	150A	C3c
115#	ZSA7	5	6 5		5.0m	30	500m	150A	A1bk
116	FZ902	10	6 5	10	2.0m	50	3 5	125A	C98
117	FZ952	10	6.5	10	2.0m	50	3 5	125A	C98a
118	653C0	5	6.5	15	5 0m	4 0	3 3	150A	C3
119	1N763-1	5	6.5	25	10m	7 0	4.0	150	DO7
120▼	BLVA165	2 9	6.5	250m	250u	350	154m	150A	A9n
121▼	BLVA465	2 9	6 5	250m	250u	250	154m	150A	A9n
122#	BZX47	5	6.5	25	2 0m		05	100A	
123#	BZX48	5	6 5	.25	2.0m	20 Ø	10	70A	C29c
124#	BZX49	5	6 5	.25	2 0m	20 Ø	20	70A	C29c
125#	BZX50	5	6 5	25	2 0m	20 Ø	50	70A	C29c
126	HR6 5	5	6.5	25	5.0m	10		175A	DO7
127	MCPD534A	10	6 5	25	10m	12		150A	M411
128	SV125	5	6 5	25	10m	8 0 Ø	3 8	150	DO7
129#	BZZ11	10	6.5	28	1 0m	140		150J	DO7
130	MC6009,A	xx	6 5	30	10m	12		175	A2m
131	1N3779	3	6 5	.40	7.5m	10	1.5	200	DO7
132	1N3780	3	6.5	40	7.5m	10	1 0	200	DO7
133	1N3781	3	6 5	40	7 5m	10	50	200	DO7
134	1N3782	3	6 5	40	7 5m	10	.20	200	DO7
135	1N3783	3	6 5	40	7 5m	10	10	200	DO7
136	1N3784	3	6 5	40	7 5m	10	05	200	DO7
137▼	LVA165	2 9	6 5	400m	250u	200	4 7	150A	DO14
138▼	LVA465	2 9	6.5	400m	250u	100	4 7	150A	DO14
139	WZ525	5	6.5	40	10m	5.0		150A	A31e
140	MCPD534B	10	6.5	500m	10m	12		150A	M411a
141	MCPD534C	10	6 5	500m	10m	12		150A	M277d
142	MTZ609,A	xx	6.5	50	10m	12		175A	A60e
143	1N2034A	5	6.5	.75	10m	8.0	4 0	150J	DO12
144	MC6109,A	xx	6 5	.75	25m	12		175	A2d
145	SV1008	5	6 5	.75	10m	8.0 Ø	3 8	150	A82f
146	WZ908	5	6 5	75	10m	8 0 Ø		150A	A1ep
147#	1S222	10	6.5	1.0	35m	3.5		150J	A56a
148	MC6309,A	xx	6 5	1.5	100m	10			A1q
149	1N2043-1	5	6 5	10	1	.80	4.0	150J	DO4
150#	1S264	10	6.5	10	350m	1.2		150J	S19g
151	1N826	5	6.55	25	7 5m	15	20	150S	DO7
152	1N826A	5	6 55	25	7.5m	15	.20	175	DO7
153	1N828	5	6.55	25	7 5m	15	.10	150S	DO7
154	1N828A	5	6.55	25	7.5m	15	10	175	DO7
155	653C1	5	6 6	.15	5 0m	4.0	3 6	150A	C3
156	1N4611	5	6.6	25	2 0m	75	.50	175A	DO7
157	1N4611A	5	6.6	25	2 0m	75	20	175A	DO7
158	1N4611B	5	6 6	.25	2.0m	75	.10	175A	DO7
159	1N4611C	5	6 6	.25	2 0m	75	.05	175A	DO7
160	1N4612	5	6 6	25	5.0m	25	50	175A	DO7
161	1N4612A	5	6 6	.25	5 0m	25	20	175A	DO7
162	1N4612B	5	6 6	25	5 0m	25	10	175A	DO7
163	1N4612C	5	6.6	.25	5 0m	25	05	175A	DO7
164	1N4613	5	6 6	.25	10m	15	50	175A	DO7
165	1N4613A	5	6 6	.25	10m	15	21	175A	DO7
166	1N4613B	5	6 6	25	10m	15	10	175A	DO7
167	1N4613C	5	6 6	.25	10m	15	05	175A	DO7
168#	MR1A	5	6 6	25	10m	8 0	.60	150S	C87
169#	MR2A	5	6 6	25	10m	8 0	.10	150S	C87
170	1N2034	5	6.6	75	10m	8 0	4 0	150J	DO12
171	1N2043	5	6.6	10	1	80	4.0	150J	DO4
172	FCT1021	5	6 7		10m	750	.10	100A	TO18
173	FCT1022	5	6 7		10m	750	20	100A	TO18
174	FCT1025	5	6 7		.10m	750	50	100A	TO18
175	FCT1035	5	6 7		10m	750	.05	100A	TO18
176	FCT1121	5	6 7		10m	750	10	100A	TO18
177	FCT1122	5	6 7		10m	750	20	100A	TO18
178	FCT1125	5	6 7		10m	750	50	100A	TO18
179	FCT1135	5	6 7		10m	750	05	100A	TO18
180	653C2	5	6 7	15	5 0m	4 0	3 8	150A	C3
181	1N5629A		6 79	1 0	10m		5 7	175A	DO13
182	1N2765	5	6.8		7 5m	20	50	175A	A1gd
183	1N2765A	5	6 8		7 5m	20	25	175A	A1gd
184#	BZX55C6V8	5	6.8		5 0m	8 0			A1ct
185#	BZX55D6V8	10	6.8		5 0m	15			A1ct
186#	BZY84D6V8	10	6 8		100m	2 0	7 0		M72
187	DSZ3006	10	6 8		75m	2.0	4 0		A266
188#	RZ6.8	5	6.8	.08	5 0m	50		150A	C18e
189#	RZZ6 8	5	6.8	.08	5.0m	60		150A	C18e
190▼#	BZX84C6V8	5	6.8	110m	5 0m	20	4 4	125J	M500
191	1N1984	10	6 8	150m	5 0m	7.0	3 0	150	C1
192	1N1984A	5	6 8	150m	5.0m	7.0	3 0	150	C1
193	1N1984B	1	6 8	150m	5.0m	7 0	3 0	150	C1
194	653C3	5	6 8	.15	5 0m	4 0	4 1	150A	C3
195#	AZ6.8	5	6 8	15	5 0m	20		170A	DO7
196#	BZ6.8	5	6 8	15	5.0m	25		170A	DO7
197#	LZ6.8	10	6.8	15	5.0m	70		170A	DO7
198#	Z6 8Ø	5	6 8	150m	5 0m	50		150A	C18d
199#	ZZ6 8Ø	5	6 8	15	5.0m	60		150A	C18d
200	1N1930	10	6 8	200m	5 0m	7 0	3.0	150A	A82e
201	1N1930A	5	6.8	200m	5 0m	7 0	3.0	150A	A82e
202	1N1930B	1	6.8	200m	5 0m	7 0	3 0	150A	A82e
203#	0ZZ6.8A	5	6 8	200m	8 0m	15	4.0	175J	DO35
204	1/4A6.8,A,B	xxx	6 8	25	9 2m	7.0	3 0	175	DO7
205	1/4M6 8AZ,10,5	xxx	6 8	25	10m	10	4 0	175S	A1cb
206	1/4M6 8Z,10,5	xxx	6 8	25	9 2m	7.0	5.0	175J	A1cy
207	25N6 8	20	6.8	25	9 2m	7.0		250	DO7
208	1N710,A	xx	6.8	25	25m	4 7	3.8	175A	DO7
209	1N710B	20	6.8	25	25m	4.7			DO7
210	1N4099	5	6.8	25	25m	200		200J	DO7
211	1N4692	5	6.8	25	.05m			200A	DO14
212#	1106	10Ø	6.8	.25	10m	8.0	3 0	150J	C18f
213▼	BLVA168	2 8	6 8	250m	250u	350	691m	150A	A9n
214▼	BLVA468	2.8	6 8	250m	250u	250	691m	150A	A9n
215#	BZY83C6V8	5	6.8	.25	5 0m	8.0	7 △	150J	C1g
216#	BZY83D6V8	10	6 8	.25	5 0m	15	7 △	150J	C1g
217#	BZY85C6V8	5	6 8	25 §	5 0m	8.0	7 △	150J	A171f

SYMBOLS AND CODES EXPLAINED IN INTERPRETER

2. SILICON REFERENCE DIODES

IN ORDER OF (1) REF. VOLTAGE, (2) DISSIPATION, and (3) TYPE No.

LINE No	3 TYPE No.	TOLERANCE 1 20 10 5 2 ± (%)	NOM REF. VOLT (V)	2 MAX DISS. @ 25°C (W)	TEST CUR. Izt (A)	MAX. DYN. IMP. (Ω)	TEMP. COEFF Tc	MAX. TEMP (°C)	DWG. No
1	GLA68,A,B	xxx	6 8	25	1 0m	50	5 0	175	DO7
2#	HS2068	5	6.8	25	5 0m			175A	DO7
3#	KS2068A	5	6.8	250m	5 0m	15	6.0 △	150A	DO7
4#	KS2068B	10	6 8	250m	5 0m	40	6 0 △	150A	DO7
5	LAC2006	10	6 8	250m	1 0m	50			M520a
6	MGLA68,A,B	xxx	6.8	25	1 0m	50	5 0	150	A2
7#	MR68C-H	5	6 8	25	5 0m	15		250	DO7
8#	MZ6A	10	6 8	25	15m	8 0	3 0	150A	DO7
9	PD6010,A	xx	6 8	25	5 0m	25		150	A109
10	PD6051	5	6.8	25	10m	4 0		150	A2c
11	PD6206	10	6.8	250m	1 0m	50			A109
12#	OAZ244	5	6.8	278m	1 0m	5 0 ∅	27	150J	A24c
13#	BZY60	5	6 8	.28	1 0m	5.0		150J	A3
14	MC6010,A	xx	6.8	30	10m	14		175	A2m
15	OAZ204	5	6 8	.30	1 0m	180	3 7	150J	C1c
16#	Z1A6 8	1	6 8	320m	5 0m	8 0	7 0 △	150A	C29
17#	Z1B6 8	5	6 8	320m	5 0m	8 0	7 0 △	150A	C29
18#	Z1C6 8	10	6 8	320m	5 0m	8 0	7 0 △	150A	C29
19#	Z1D6 8	15	6 8	320m	5.0m	8 0	7 0 △	150A	C29
20	LDZ70/6A8	5	6 8	360m	20m	5 0		150J	M401
21#	1N754	10	6 8	400m	20m	5.0	3.5	175A	A1
22#	1N754A	5	6 8	400m	20m	5 0	3 5	175A	A1
23	JAN1N754A	5	6 8	400m	20m	3 0	5 0	175A	A1dd
24	1N957,A,B	xxx	6.8	40	19m	4 5	4 0	175S	DO7
25	1N3514	5	6 8	40	20m	3 0	3 5	200A	DO7
26	JAN1N4099	5	6.8	400m	250u	200	6 0	175A	A1sx
27	1N5526	20	6.8	400m§	1 0m			175A	DO7
28	1N5526A	10	6.8	400m§	1 0m			175A	DO7
29	1N5526B	5	6 8	400m§	1 0m	30		175A	DO7
30▼	JAN1N5526B	5	6 8	400m	1 0m	30	5 2	200A	DO14
31	1N5526C	2	6 8	400m§	1.0m	30		175A	DO7
32	1N5526D	1	6 8	400m§	1.0m	30		175A	DO7
33▼	1N5732B	5	6 8	400m	10m	10	4 2	200J	DO35
34#	1S2068∅	10	6 8	400m	5 0m	40	4 5	150A	A1
35#	1S2068A	5	6 8	40	5.0m	15	4 5	150A	A1
36#	1S7068,B	x15	6 8	40	5 0m	40	4 5	150A	A1
37#	1S7068A	5	6 8	40	5 0m	15	4 5	150A	A1
38#	5516	5	6 8	40	5.0m	8 0	3.0	125A	A1ce
39#	BZX46C6V8	5	6 8	400m	18	4 5	5 0	175J	DO35
40▼#	BZX71B6V8	2	6 8	400m§	5.0m	15		175J	DO35
41#	BZX71C6V8	5	6.8	400m§	5.0m	8 0		200S	A9m
42#	BZX74C6V8	5	6.8	400m	25m	100	3 8		A31e
43#	BZX79C6V8	5	6 8	400m	5.0m	15	30	200J	A257
44#	BZX83C6V8	5	6.8	400m	5 0m	8 0	4 0	150J	DO35
45▼#	BZY85B6V8	2	6.8	400m	5 0m	8.0	3.0	150J	DO7
46#	BZY85D6V8	10	6.8	400m	5.0m	18	3 0	150J	A1su
47#	BZY88C6V8	5	6 8	40	5 0m	3 0 ∅		150	DO7
48	C4012	10	6.8	40	19m	4 5		175	A134a
49	C6012	10	6.8	400m	1 0m	20 ∅	4.0	175A	M371c
50	C6012A	5	6.8	400m	1.0m	20 ∅	4 0	175A	M371c
51	C6112	10	6 8	400m	1.0m	20 ∅	4 0	175A	M371d
52	C6112A	5	6 8	400m	1 0m	20 ∅	4 0	175A	M371d
53	CZA6 8D,10,5	xxx	6 8	40 ∅	250u	200	4 0	175J	M371
54	CZB6 8D,10,5	xxx	6 8	40 ∅	9 2m	7 0	4 0	175J	M371
55	CZC6 8D,10,5	xxx	6.8	400m∅	18m	4 5	4 0	175J	M371
56	CZD6 8D,10,5	xxx	6 8	40 ∅	250u	200	4 0	175J	M451
57	CZE6 8D,10,5	xxx	6 8	400m∅	18m	4 5	4 0	175J	M451
58	CZF6 8D,10,5	xxx	6 8	40 ∅	250u	200	3 5	175J	M452
59	CZG6 8D,10,5	xxx	6 8	40 ∅	20m	5 0	5 3	175J	M452
60	HM6 8,A,B	xxx	6 8	400m§	18m	4 5		175A	A196c
61#	HS7068	5	6 8	40	5 0m			175A	DO7
62#	KS068A	5	6 8	40	5 0m	15	8 5 △	150A	DO7
63#	KS068B	10	6 8	40	5 0m	40	8 5 △	150A	DO7
64#	LR68CH	5	6 8	40	5 0m	15	3 6	150S	DO7
65▼	LVA168	2 8	6 8	400m	250u	200	5 0	150A	DO14
66▼	LVA468	2 8	6 8	400m	250u	100	5 0	150A	DO14
67	M4Z6 8,A,-20	xx*	6 8	40	18m	10		150A	A1kk
68#	M6 8Z	5	6 8	400m	5 0m	700	4 0		A31e
69	MACZA6 8D,10,5	xxx	6 8	40 ∅	250u	200	4 0	175J	M453
70	MACZB6.8D,10,5	xxx	6 8	40 ∅	9 2m	7 0	4 0	175J	M453
71	MACZC6 8D,10,5	xxx	6 8	400m∅	18m	4 5	4 0	175J	M453
72	MACZD6.8D,10,5	xxx	6 8	40 ∅	250u	200	4 0	175J	M453
73	MACZE6 8D,10,5	xxx	6 8	400m∅	18m	4 5	4 0	175J	M453
74	MACZF6 8D,10,5	xxx	6 8	40 ∅	250u	200	3 5	175J	M453
75	MACZG6.8D,10,5	xxx	6 8	40 ∅	20m	5 0	5 3	175J	M453
76	MBCZA6 8D,10,5	xxx	6 8	40 ∅	250u	200	4 0	175J	M454
77	MBCZB6 8D,10,5	xxx	6 8	40 ∅	9.2m	7 0	4 0	175J	M454
78	MBCZC6 8D,10,5	xxx	6 8	400m∅	18m	4 5	4 0	175J	M454
79	MBCZD6 8D,10,5	xxx	6 8	40 ∅	250u	200	4 0	175J	M454
80	MBCZE6 8D,10,5	xxx	6 8	400m∅	18m	4 5	4 0	175J	M454
81	MBCZF6 8D,10,5	xxx	6 8	400m∅	250u	200	3 5	175J	M454
82	MBCZG6.8D,10,5	xxx	6 8	40 ∅	20m	5 0	5 3	175J	M454
83	MCCZA6.8D,10,5	xxx	6 8	40 ∅	250u	200	4 0	175J	M455
84	MCCZB6 8D,10,5	xxx	6 8	40 ∅	9 2m	7 0	4 0	175J	M455
85	MCCZC6 8D,10,5	xxx	6 8	400m∅	18m	4 5	4 0	175J	M455
86	MCCZD6 8D,10,5	xxx	6 8	40 ∅	250u	200	4 0	175J	M455
87	MCCZE6 8D,10,5	xxx	6 8	400m∅	18m	4.5	4 0	175J	M455
88	MCCZF6.8D,10,5	xxx	6.8	40 ∅	250u	200	3 5	175J	M455
89	MCCZG6 8D,10,5	xxx	6.8	40 ∅	20m	5 0	5 3	175J	M455
90	MDCZA6 8D,10,5	xxx	6 8	40 ∅	250u	200	4 0	150A	M410
91	MDCZB6 8D,10,5	xxx	6 8	40 ∅	9 2m	7 0	4.0	150A	M410
92	MDCZC6 8D,10,5	xxx	6 8	400m∅	18m	4 5	4 0	150A	M410
93	MDCZD6 8D,10,5	xxx	6 8	40 ∅	250u	200	4 0	150A	M410
94	MDCZE6 8D,10,5	xxx	6 8	400m∅	18m	4 5	4 0	150A	M410
95	MDCZF6 8D,10,5	xxx	6.8	40 ∅	250u	200	3 5	150A	M410
96	MDCZG6 8D,10,5	xxx	6 8	40 ∅	20m	5 0	5 3	150A	M410
97	MZ500-12	10	6 8	4 §	20m	5.0 ∅	5.0	175J	DO7
98	MZC6.8A10	†	6.8	400m§	7 3m	38	5 0 △	175J	M468
99	MZC6.8B10	§†	6.8	400m§	250u	200		175J	M468
100#	Z5A6.8	1	6 8	400m§	5 0m	10	7.0 △	200J	A1hs
101#	Z5B6.8	5	6.8	400m§	5.0m	10	7 0 △	200J	A1hs
102#	Z5C6.8	10	6 8	400m§	5.0m	10	7 0 △	200J	A1hs
103#	Z5D6 8	15	6 8	400m§	5 0m	10	7 0 △	200J	A1hs
104#	ZF6 8	5	6 8	400m	5 0m	8 0	3 0	150J	DO7
105#	ZG6 8	10	6 8	400m	5 0m	8 0	3 0	150J	DO7
106#	ZP6 8#	5	6 8	400m	5 0m	8 0	4 5	150J	DO7
107	1/2Z6 8T5	5	6 8	50	19m	3 6		175	A94f
108	1N3400∅	10	6.8	50	20m	20	5 0	200A	P5
109	1N3412	10	6 8	50	1 0m	300	1 4	200A	P5
110	1N5235	20†	6 8	50	20m			200A	DO7
111	1N5235A,B	§∅	6 8	50	20m	3 0	5 0	200A	DO7
112▼	HEPZ0215-RT	10	6 8	500m	20	17			C103
113	IDAZ3400,A,B,C∅	xxxx	6 8	500m	20m	20	5 0	200A	A1hc
114	MTZ610,A	xx	6.8	50	10m	14		175A	A60e
115	MZ92-6.8	†	6 8	500m§	20m		5 0	150J	C103
116	PS8909	5	6.8	50	20m	2 0	4.5	150	A60p
117	S5235,A,B	xxx	6.8	500m	20m	5.0	5 0	175	DO41
118#	ZSF6 8	1	6.8	500m	7 0m	10	1 0	150S	M487a
119#	ZOA6 8	1	6 8	520m	5 0m	6 0	7 0 △	150J	A1ef
120#	ZOB6 8	5	6 8	520m	5 0m	6 0	7 0 △	150J	A1ef
121#	ZOC6 8	10	6.8	520m	5 0m	6.0	7 0 △	150J	A1ef
122#	ZOD6 8	15	6 8	520m	5 0m	6 0	7 0 △	150J	A1ef
123	1N4628	5	6 8	60	19m	700	6 4	200A	DO14
124	LVA68A	5	6 8	600m	1 0m	50			DO14
125	LVA68B	2	6 8	600m	1 0m	50			DO14
126	LVA368A	5	6 8	600m	1 0m	50			DO14
127	LVA368B	2	6 8	600m	1 0m	50			DO14
128#	UZ6.8	10	6 8	60	87m	4 0	5.0	135A	DO3
129#	ZW6.8	5	6 8	600m	5 0m	8 0	3 0	150J	A1bg
130	ZZ6 8△	10	6 8	60	16m	10	2 5	175A	M222
131	7JZ6 8	†	6 8	750m	18m	4 5	4 0	175	DO15
132	7Z6 8,A,B,D	xxxx	6 8	750m	18m	4 5	4 0	175	DO27
133	7Z6 8C	∅	6 8	750m	18m	4 5	4.0	175	DO27
134	7ZM6.8,A,B,D	xxxx	6 8	750m	18m	4.5	4 0	175	DO41
135	7ZM6.8C	∅	6 8	750m	18m	4.5	4 0	175	DO41
136	1N1510,A	xx	6 8	75	22m	3.0	5 0	200S	DO12
137	1N3675	20	6 8	750m§	19m	4 5		175S	A1az
138	1N3675A	10	6 8	750m§	19m	4 5		175S	A1az
139	1N3675B	5	6 8	750m§	19m	4 5		175S	A1az
140	MC6110,A	xx	6 8	75	25m	14		175A	A2d
141	MMZ6 8,A,-20	xx*	6 8	75	18m	10		150A	A1kk
142	MZ6 8T20,10,5	xxx	6 8	75	22m	4.5	5 0	165A	A152
143	1A6.8M,A,B	xxx	6.8	1 0	37m	3 5		75A	DO15
144	1E6 8Z,10,5	xxx	6 8	1 0	37m	3 5	4 0	150A	A52g
145	1N1521,A	xx	6 8	1 0	30m	4 2	5 0	200S	DO3
146	1N1767,A	xx	6 8	1 0	100m	1 7		175S	DO13
147	1N3016	20	6 8	1.0	37m	3 5		175A	A31a
148	1N3016A	10	6 8	1 0	37m	3 5		175A	A31a
149	1N3016B	5	6.8	1 0	37m	3 5		175A	A31a
150	JAN1N3016B	5	6 8	1 0	37m	3 5	5 7	175A	A31c
151	1N3829,A	xx	6 8	1 0	37m	1.5	4 0	175A	A31a
152	1N4158	20	6 8	1 0	37m	3 5	4.0	175	DO29
153	1N4158A	10	6 8	1 0	37m	3 5	4 0	175	DO29
154	1N4158B	5	6 8	1 0	37m	3 5	4.0	175	DO29
155	1N4323,A,B	xxx	6 8	1 0	37m	3.5	4 0	300S	DO7
156♦	1N4400	20	6 8	1 0	37m	2 0		175S	A266a
157	1N4400A	10	6.8	1 0	37m	2.0	4.0	175A	A1cm
158	1N4400B	5	6 8	1 0	37m	2 0	4 0	175A	A1cm
159	1N4657	5	6 8	1 0	37m	300	5 7	200A	DO15
160	1N4736	10	6 8	1 0	37m	3 5		200A	A1ay
161	1N4736A	5	6 8	1 0	37m	3 5		200A	A1ay
162	1N5559	20	6.8	1 0 §	37m			200A	A196d
163	1N5559A	10	6.8	1 0 §	37m	3.5		200A	A196d
164	1N5559B	5	6 8	1 0 §	37m	3 5		200A	A196d
165#	1S3006	xx	6 8	1 0	50m	1 5	4 0	150	A3
166	1Z6.8,A,B	xxx	6 8	1 0	37m	4 0		150	A1ay
167	1Z6.8T20,10,5	xxx	6.8	1 0	30m	6 3	5.0	165A	A89c
168#	1ZC6.8T10,5	xx	6 8	1 0	30m	8 0	5.0	165A	A31p
169#	19Z6F,AF	12,6	6 8	1.0	10m	20	6.0	150J	DO13
170#	BZX29C6V8	5	6.8	1 0	20m	3.5	4 0	175J	A1cd
171#	BZX61C6V8	5	6.8	1 0	20m	5.5	4 0	175J	A3y
172♦	BZX85C6V8	5	6.8	1 0	35m	3.5	4.4	150A	DO15
173	CD31-00009	5	6 8	1.0	37m	3.5	4.0	200A	A1ce
174	CD31-12016	5	6.8	1 0	37m	3.5		200A	A1ce
175	CD32-12046	5	6.8	1 0	37m	3 5			

SYMBOLS AND CODES EXPLAINED IN INTERPRETER

2. SILICON REFERENCE DIODES

IN ORDER OF (1) REF. VOLTAGE, (2) DISSIPATION, and (3) TYPE No.

LINE No	TYPE No.	TOLERANCE 3 (20 10 5 2) ± (%)	NOM. REF. VOLT. (V)	2 MAX. DISS. @ 25°C (W)	TEST CUR. Izt (A)	MAX. DYN. IMP. (Ω)	TEMP. COEFF Tc	MAX. TEMP (°C)	DWG. No.
1	CZ6 8	†	6 8	1 0	40m	12	4 0	175	DO15
2	CZ6 8,A,B,D	xxxx	6 8	1 0	40m	12	4 0	175	DO15
3	CZ6 8C	∅	6.8	1 0	40m	12	4 0	175	DO15
4	EVR6,A,B	xxx	6 8	1 0	37m	11		175A	DO27
5#	EZ6A	10	6 8	1 0	56m	700	3.0		A1em
6#	FPZ6V8	5	6 8	1 0	37m	400	4.0		A31h
7	G6 8T20,10,5	xxx	6.8	1 0	37m	3 0	5 0	175A	DO15
8#	GZ6.8	5	6 8	1 0	25m	20 △		150A	S115
9	HW6 8,A,B	xxx	6 8	1 0	37m	3.5		175	A196
10	IDA1Z6 8,A,B,C∅	xxxx	6.8	1 0	25m			200A	A1ht
11	JZ6.8,A,B,D	xxxx	6 8	1 0	37m	3.5	4 0	175	DO15
12	JZ6.8C	∅	6 8	1 0	37m	3.5	4.0	175	DO15
13	LPM6 8,A,-20	xx*	6.8	1.0	37m	3 5		150A	A1kk
14	PS10016B	5	6 8	1 0	37m	3.5		175A	A60p
15	PS10060	5	6 8	1 0	37m	2.0	5 7	150	A60p
16	SZ6 8	xxxx	6 8	1 0	20m	1 5 ∅	3.5	150A	A3g
17	TZ6.8,A,B,D	xxxx	6 8	1 0	40m	12	4 0	175	DO27
18	TZ6.8C	∅	6.8	1 0	40m	12	4.0	175	DO27
19	UZ8706	5	6 8	1 0	37m	3 5	4 0	175	A146h
20	UZ8806	10	6 8	1 0	37m	3.5	4.0	175	A146h
21	VR6 8,A,B	xxx	6.8	1.0	37m	3.5		125A	A1b
22#	Z2A68F	20§∅	6 8	1 0	20m	15	4 0	100J	A141
23#	Z4A6.8	1	6.8	1 0	100m	1.0	7.0 △	150J	A1ef
24#	Z4B6.8	5	6 8	1 0	100m	1.0	7.0 △	150J	A1ef
25#	Z4C6.8	10	6 8	1 0	100m	1 0	7.0 △	150J	A1ef
26#	Z4D6 8	15	6 8	1 0	100m	1 0	7 0 △	150J	A1ef
27	Z6 8,A,B,D	xxxx	6.8	1 0	37m	3 5	4 0	175	DO27
28	Z6.8C	∅	6.8	1 0	37m	3 5	4 0	175	DO27
29	ZA6.8,A,B	xxx	6 8	1 0	37m	3.5		150C	A1ew
30	ZB6.8#	†	6 8	1 0 §	37m	3 5		150A	A1bc
31	ZD6.8∅,A,B	xxx	6 8	1 0	37m	3.5	4 0	175A	A1cm
32#	ZEC6 8	20	6 8	1 0	30m	8 0	05	165A	DO3
33#	ZF6A	10	6.8	1 0	56m	4.5	3 0	150A	DO13
34	ZH6.8,A,B	xxx	6.8	1 0	37m	3 5	4 0	175A	DO1
35	ZM6.8,A,B,D	xxxx	6.8	1 0	37m	3 5	4 0	175	DO41
36	ZM6 8C	∅	6.8	1 0	37m	3.5	4 0	175	DO41
37#	7716	5	6 8	1 1	100m	2 0	3 0	125A	A1bu
38#	BZY92C6V8	5	6 8	1 1	100m	2.0	3 0	150J	DO13
39#	ZD6.8#	5	6.8	1.3	100	2 0	4.0	150J	DO13
40	ZM6 8∅	10	6.8	1.3	100	2.0	4 0	150J	DO13
41#	ZU6.8	10	6.8	1.3	100	2.0	4 0	150J	A1bg
42#	ZY6.8	5	6.8	1.3	100	2.0	4.0	150J	A1bg
43▼	1N3785	20	6.8	1 5	55m	2 7	5 7	175S	C14∅
44▼	1N3785A	10	6.8	1 5	55m	2.7	5 7	175S	C14∅
45▼	1N3785B	5	6 8	1.5	55m	2.7	5 7	175S	C14∅
46	1N4461	5	6.8	1.5	37m	2.5		175A	A196
47	JAN1N4461	10	6.8	1 5	37m	2.5	5 7	175A	A1v
48#	1S4006,A	xx	6 8	1.5	50m	.90	4.0	150A	DO1
49	1 5DKZ6.8,A,B	xxx	6 8	1.5	55m	2.7		175A	DO27
50	1 5JZ6.8,A,B,D	xxxx	6.8	1.5	55m	2 7	5.7	175	DO15
51	1 5JZ6.8C	∅	6.8	1 5	55m	2 7	5.7	175	DO15
52	1 5Z6 8,A,B,D	xxxx	6.8	1.5	55m	2 7	5.7	175	DO27
53	1.5Z6 8C	∅	6 8	1 5	55m	2 7	5.7	175	DO27
54#	BZY96C6V8	5	6 8	1 5	100m	3 0	3 0	175J	DO1
55	MC6310,A	xx	6.8	1 5	100m	12			A1q
56	MZ1000-9	10	6.8	1 5 §	37m	5 3 ∅	5.0	175J	A1ay
57#	SZ68A	5	6 8	1.5	20m	10	4.0	160A	A26
58#	Z2A6 8	1	6.8	1.5	100m	2.0	7 0 △	150J	A244
59#	Z2B6.8	5	6 8	1.5	100m	2.0	7 0 △	150J	A244
60#	Z2C6.8	10	6 8	1.5	100m	2 0	7 0 △	150J	A244
61#	Z2D6 8	15	6.8	1 5	100m	2 0	7.0 △	150J	A244
62#	Z3A6.8	1	6.8	1.5	100m	2 0	7 0 △	150J	S4f
63#	Z3B6.8	5	6 8	1 5	100m	2 0	7.0 △	150J	S4f
64#	Z3B68CF	20§∅	6 8	1 5	20m	4.0	5 0	175J	DO1
65#	Z3C6.8	10	6.8	1 5	100m	2.0	7.0 △	150J	S4f
66#	Z3D6.8	15	6.8	1 5	100m	2.0	7 0 △	150J	S4f
67#	59Z6,A	12,6	6.8	1 8	100m	10	50	150J	DO4
68	2VR6 8,A,B	xxx	6 8	2.0	73m	2.5			A3e
69#	BZZ16	10	6.8	2 0	20m	5 0		150J	DO4
70	LMZ6.8,A,-20	xx*	6.8	2 0	73m	5.0		150A	A1kk
71	ZBC6.8	†	6 8	2 0 §	74m	2 0		150A	A1bc
72	1N5016	10	6.8	2 5	92m	1 6	4.0	150	A1gn
73	1N5016A	5	6 8	2.5	92m	1.6	4 0	150	A1gn
74	1N5063	5	6.8	3 0	75m	2 0		175A	A146j
75	3TZ6.8,A,B,D	xxxx	6.8	3.0	150m	2.5		175	A1ec
76	3TZ6.8C	∅	6 8	3.0	150m	2 5		175	A1ec
77	3VR6.8,A,B	xxx	6.8	3 0	.25	1 0			A222
78	3Z6 8,A,B	xxx	6.8	3.0	110m	2 0		150	A222
79	CZ5063	10	6.8	3 0	75m	2 0	28	175A	A196e
80	M3Z6.8,A	xx	6 8	3 0	110m	3.0		150A	A1kk
81	MZ706	5	6.8	3 0	75m	2.0	4 0	175A	A146j
82	MZ806	10	6 8	3.0	75m	2 0	4.0	175A	A146j
83	MZ906	20	6.8	3 0	75m	2 0	4 0	175A	A146j
84	UZ706	5	6.8	3.0	75m	2.0	4.0	175A	A60
85	UZ806	10	6.8	3.0	75m	2 0	4 0	175A	A146f
86	UZ906	20	6.8	3 0	75m	2.0	4 0	175A	A60
87	ZAC6 8,A,B	xxx	6.8	3 0	37m	3.5		150C	A1ey
88	ZCC6.8	†	6.8	3 0 §	75m	2 0		150A	A1ey
89	1N1591,A	xx	6 8	3 5	100m	90	5 0	200S	DO4
90	3Z6.8T20,10,5	xxx	6.8	3 5	100m	1 5	5.0	165	DO4
91	1N4954	5	6 8	5 0	175m	1.0		175A	A146m
92	JAN1N4954	5	6 8	5 0	175m	1 0	5 0	175A	A248f
93♦	1N5342	20	6 8	5.0	175m			200A	A1ee
94▼	1N5342A	10	6 8	5 0	175m	1 0		200A	A1ee
95▼	1N5342B	5	6 8	5 0	175m	1 0		200A	A1ee
96▼	5ZS6 8,A,B	xxx	6 8	5 0 §	175m	1 0		200A	A1ts
97#	1306	10∅	6.8	5 0	100m	2 0	3.0	150J	A9h
98▼	CTZC6.8,A,B,D∅	xxxx	6.8	5.0 §	175m	1 0 ∅	4 0	175A	A1ey
99▼	CTZC6 8C∅	1	6.8	5 0 §	175m	1.0 ∅	4.0	175A	A1ey
100▼	CTZC6 8E∅	3	6 8	5 0 §	175m	1 0 ∅	4 0	175A	A1ey
101	DSZ5706	5	6.8	5.0	175m	2 0	5 0	175A	A60r
102	DSZ5806	10	6.8	5 0	175m	2 0	5.0	175A	A60r
103	MZ5706	5	6 8	5 0	175m	1 0	4 0		A60f
104	MZ5806	10	6.8	5.0	175m	1.0	4.0		A60f
105	MZ5906	20	6.8	5 0	175m	1 0	4.0		A60f
106▼	TZC6.8,A,B,D	xxxx	6 8	5 0 §	175m	1.0 ∅	4.0	175A	A1ey
107▼	TZC6.8C	1	6 8	5 0 §	175m	1 0 ∅	4.0	175A	A1ey
108▼	TZC6.8E	3	6.8	5 0 §	175m	1.0 ∅	4.0	175A	A1ey
109▼	UZ5706	5	6.8	5 0	175m	1 0	5 0	175A	A146m
110♦	UZ5806	10	6.8	5 0	175m	1.0	5.0	175A	A146m
111	UZ5906	20	6.8	5 0	175m	1.0 ∅	4.0	175A	A146m
112	ZC6 8	†	6.8	5 0 §	175m	1.0		150A	A1ey
113	UZ4706	5	6.8	8 0	175m	1 0		175A	A146m
114	UZ4806	10	6.8	8 0	175m	1 0		175A	A146m
115	1N1602,A	xx	6.8	10	300m	.40	5.0	200S	DO4
116	1N1805,A	xx	6.8	10	1	1 0		175A	S11
117	1N1805B	20	6.8	10	1	1 0			S11e
118	1N1805C,CA∅	xx	6.8	10 §	1 0	1.0		175J	S19a
119	1N2970,A,B	xxx	6.8	10	370m	1 2		175C	DO4∅
120	JAN1N2970B,RB	5	6.8	10	370m	1.2	5.7	150C	DO4
121	1N3999,A	xx	6.8	10	370m	1 2		175S	DO4
122	JAN1N3999A,RA	5	6.8	10 §	.37	1 2	5.7	150A	DO4
123	1N4258	20	6.8	10	370m	1.2	4 0	175C	S134
124	1N4258A	10	6 8	10	370m	1.2	4.0	175C	S134
125	1N4258B	5	6.8	10	370m	1.2	4 0	175C	S134
126	JAN1N4258B	5	6.8	10 §	370m	1.2	5.7	175S	S134a
127#	1S6006	10	6.8	10	200m	6 0	3 0	150	DO4
128#	1S6006A	5	6.8	10	200m	4.0	3.0	150	DO4
129	10PZ6 8,A,B,D	xxxx	6.8	10	370m	1.2	4.0	175	DO4
130	10PZ6.8C	∅	6.8	10	370m	1 2	4.0	175	DO4
131	10RZ6 8,A,B,D	xxxx	6.8	10	800m	4.0	4.0	155	DO4
132	10RZ6 8C	∅	6.8	10	800m	4.0	4 0	155	DO4
133	10Z6.8T20,10,5	xxx	6.8	10	300m	.60	5.0	165	DO4
134#	GZ6A	10	6.8	10 ∅	330m	1.0	3 0	150A	DO4
135#	OAZ224	5	6.8	10	20m	5.0		150J	DO4
136#	PZ6A	10	6.8	10 ∅	330m	1 0	3 0	150A	S95a
137	UZ7706	5	6.8	10	350m	.60	4 0	175	S277∅
138	UZ7806	10	6.8	10	350m	60	4 0	175	S277∅
139	UZ7906	20	6.8	10	350m	.60	4.0	175	S277∅
140#	1206	10∅	6.8	15	500m	.50	3.0	150J	S87
141	75TE6.8,A	xx	6.8	20	1.5	12m	4.0	125C	TO36
142#	BZY93C6V8	5	6.8	20 §	2	20	2.5	175J	DO4∅
143#	RZ6A	xx	6.8	20 ∅	530m	1.0	3.0	150A	DO5
144#	79Z6,A	12,6	6.8	25	400m	1 2	6.0	150J	S179
145#	ZL6.8	10	6.8	25 ∅	100	2.0	4.0	150J	M41
146#	ZX6.8	5	6 8	25 ∅	100	2 0	4.0	150J	M41
147	1N2804,A,B	xxx	6.8	50	1.8	.20	4.0	175S	C5a
148	JAN1N2804B,RB	5	6 8	50	1.8	.20	5.7	150C	C5a
149	1N3305	20	6 8	50	1.8	200m	4.0	175J	DO5
150	1N3305A	10	6.8	50	1.8	200m	4.0	175J	DO5
151	1N3305B	5	6.8	50	1.8	200m	4.0	175J	DO5
152	JAN1N3305B,RB	5	6 8	50	1.9	20	5 7	150	DO5
153	1N4555,A,B	xxx	6.8	50	1.8	16	5.3	175J	DO5
154	1N4563,A,B	xxx	6.8	50	1.8	16	5.3	175J	C5a
155	50T6 8,A,B	xx*	6.8	50	1 8	.20	4.0		S19e
156	80TF6 8,A	xx	6.8	80	1 5	12m	4 0	125C	M117c
157#	9606	5	6 8	12k	100m	3.0	150		C29j
158	250ZE6.8	10	6.8	250 §	20		8.0	190A	S83
159	250ZF6 8	10	6.8	250 §	20		8 0	190A	M56a
160	LID6.8,A	xx	6.8	400	18m	4 7		150A	M401
161	1N1957,A,B	xx1	6.85	40	5.0m	7.0	3.0	150	DO7
162	1N2043B	5	7.0		1	.80		150A	S19a
163	SV3170	5	7 0		10m	10	2.0	125A	A1ha
164	SV3171	5	7 0		10m	10	1.0	125A	A1ha
165#	RD7H	10	7.0	.10	5.0m	55	3.0	150A	C12b
166	653C4	5	7 0	15	5.0m	5.0	4.2	150A	C3
167#	SZ200-7	15	7.0	.20	5.0m	15	4 0	100A	A138
168	1N4501	5	7.0	21	10m	10	1.0	150S	A1hd
169	1N763-2	5	7 0	25	10m	7.0	4.0	150	DO7
170#	1S332	9 0	7 0	.25	10m	15	5 0	150J	A1ce
171#	1S471	10	7.0	.25	20m	15	4.0	150J	DO7
172#	MZ1007	9	7.0	250m	10m	15	4.0	175J	DO7
173	SV126	5	7.0	.25	10m	8.0 ∅	4.3	150	DO7
174#	SZ7	9	7.0	.25	20m	15	.49	150J	C1f
175#	1S192	9 0	7.0	.40	20m	5.0	5.0	150J	A1ce
176	WZ526	5	7.0	.40	10m	5.0		150A	A31e
177	1N2034-2	5	7.0	.75	10m	8.0	4.0	150J	DO12
178	SV1009	5	7.0	.75	10m	8.0 ∅	4.3	150	A82f
179	WZ909	5	7.0	.75	10m	8.0 ∅		150A	A1ep
180#	1S481	10	7.0	1 0	40m	15	4.0	150J	A115
181	VR7,A,B	xx*	7.0	1.0	25m	5.0			A1bn
182#	SZL7	9	7.0	1 3	50m	2 5		150J	M72
183	2VR7,A,B	xx*	7.0	2.0	250u	5.0			A3e
184#	VR7F	5	7.0	2 2	20m	4.0		200S	DO3
185#	1S491	10	7.0	3 0	120m	15	4.0	150J	S112
186#	VR7E	5	7.0	5 8	20m	4 0		200S	DO4
187	1N2043-2	5	7.0	10	1	80	4.0	150J	DO4
188	653	10	7.1	15	5.0m	5 0	4.2	150A	C3
189	1N475∅	10	7.1	200m	5 0m	25 △		200A	C1
190	1N475A∅	5	7 1	200m	5.0m	25 △		200A	C1
191	1N475B∅	1	7.1	200m	5 0m	25 △		200A	C1
192	IDAZ475,A,B,C∅	xxxx	7.1	200m	5.0m	25		200A	A1hc
193#	RD7A	10	7.1	.20	10m	15	4.0	150S	A1dw
194	1N470	10	7.1	250m	5.0m	10 △		200A	C1
195	1N470A	5	7 1	250m	5.0m	10 △		200A	C1
196	1N470B	1	7.1	250m	5.0m	10 △		200A	C1

SYMBOLS AND CODES EXPLAINED IN INTERPRETER

2. SILICON REFERENCE DIODES

IN ORDER OF (1) REF. VOLTAGE, (2) DISSIPATION, and (3) TYPE No.

LINE No	3 TYPE No.	TOLERANCE 1 20 10 5 2 ± (%)	NOM. REF. VOLT. (V)	2 MAX. DISS. @ 25°C (W)	TEST CUR. Izt (A)	MAX. DYN. IMP. (Ω)	TEMP. COEFF Tc	MAX TEMP (°C)	DWG. No.
1	1N707	20	7.1	25	5.0m	10		200A	A1cw
2	1N707A	5	7 1	25	5.0m	10		200A	A1cw
3	1N763	xx	7 1	250m	10m	7.0	4.0	150	DO7
4	1N763A	xx	7 1	250m	10m	7.0	4.0	150	DO7
5#	1S757	xxx	7 1	25	10m	10	3 5	150	C1d
6▼	BLVA171	2 7	7 1	250m	250u	350	1.2	150A	A9n
7▼	BLVA471	2 7	7.1	250m	250u	250	1 2	150A	A9n
8	CD3124	5	7 1	25	10m	80 ∅	4 0	150A	A1sj
9▼	LVA171	2 7	7 1	400m	250u	350	5.2	150A	DO14
10▼	LVA471	2 7	7 1	400m	250u	175	5 2	150A	DO14
11	PS6470	13	7 1	50	10m	10		200J	A1gd
12▼#	BZ071	5	7 1	1 0	30m	6 0	4 0	175J	A60t
13#	RD7B	10	7 1	1 0	40m	5 0	4 0	150S	A164
14#	RD7C	10	7 1	3 0	120m	3 0	4 0	150S	S42
15#	RD7D	10	7 1	10	400m	1.8	4.5	150S	S103
16	1N378	5	7 15		20m	20		150A	A1er
17	653C5	5	7 2	15	5 0m	5 0	4 3	150A	C3
18#	BZZ12	10	7 2	28	1.0m	17		150J	DO7
19	653C6	5	7 4	15	5 0m	6 0	4 7	150A	C3
20▼	BLVA174	2 5	7 4	250m	250u	350	1 6	150A	A9n
21▼	BLVA474	2 5	7 4	250m	250u	250	1 6	150A	A9n
22▼	LVA174	2 5	7 4	400m	250u	350	5 5	150A	DO14
23▼	LVA474	2 5	7 4	400m	250u	175	5 5	150A	DO14
24	1N3112	5	7 4	1 0	120m	2 0	4 7		A6
25	1N2043C	5	7 5		1	80		150A	S19a
26#	BZX55C7V5	5	7 5		5 0m	7 0			A1ct
27	DSZ3007	10	7 5		75m	2 0	4 0		A266
28	MC71	x	7 5		10m	15			M409b
29#	MR75E-H	15	7 5			20			DO7
30#	RZ7 5	5	7 5	08	5 0m	40		150A	C18e
31#	RZZ7 5	5	7 5	08	5 0m	40		150A	C18e
32▼#	BZX84C7V5	5	7 5	110m	5 0m	20	5 3	125J	M500
33#	9607	5	7 5	12	1 0m	100	4 0	150	C29j
34#	AZ7 5	5	7 5	15	5 0m	15		170A	DO7
35#	BZ7 5	5	7 5	15	5 0m	35		170A	DO7
36#	Z7.5∅	5	7 5	150m	5 0m	40		150A	C18d
37#	ZZ7 5	5	7 5	15	5 0m	40		150A	C18d
38#	OAZ271	20	7 5	23	1 0m	8 0		150J	A3
39	1/4A7 5,A,B	xxx	7 5	25	8 3m	8 0	4 0	175	DO7
40	1/4M7 5Z,10,5	xxx	7 5	25	8 3m	8 0	6 0	175J	A1cy
41	25N7 5	20	7 5	25	8 3m	8 0		250	DO7
42	1N711,A	xx	7 5	25	25m	5 3	4 8	175A	DO7
43	1N711B	20	7 5	25	25m	5 3			DO7
44	1N763-3	5	7 5	25	10m	7 0	4 0	150	DO7
45	1N4100	5	7.5	25	25m	200		200J	DO7
46	1N4693	5	7.5	25	05m			200A	DO14
47#	02Z7 5A	5	7 5	250m	8 0m	15	5.5	175J	DO35
48#	1107	10∅	7 5	25	10m	8 0	4 0	150J	C18f
49#	BZY83C7V5	5	7.5	25	5 0m	6 0	7 △	150J	C1g
50#	BZY85C7V5	5	7 5	25 §	5 0m	7 0	7 △	150J	A171f
51	GLA75,A,B	xxx	7 5	.25	1 0m	50	6 1	175	DO7
52#	HS2075	5	7 5	.25	5.0m			175A	DO7
53#	KS2075A	5	7 5	250m	5 0m	15	6 0 △	150A	DO7
54#	KS2075B	10	7 5	250m	5 0m	15	7 0 △	150A	DO7
55	LAC2007	10	7 5	250m	1 0m	100			M520a
56	MCPD535A	10	7 5	.25	10m	15		150A	M411
57	MGLA75,A,B	xxx	7 5	25	1 0m	50	6 1	150	A2
58#	MR75C-H	5	7 5	25	5 0m	15		250	DO7
59	PD6011,A	xx	7 5	.25	5 0m	7 0		150	A109
60	PD6052	5	7 5	25	10m	3.0		150	A2c
61	PD6207	10	7.5	250m	1.0m	100			A109
62	SV127	5	7 5	25	10m	8 0 ∅	8 0	150	DO7
63#	OAZ245	5	7 5	278m	1 0m	8 0 ∅	40	150J	A24c
64#	BZY61	5	7.5	.28	1 0m	8 0		150J	A3
65#	BZY67	15	7 5	.28	1 0m	8 0		150J	A3
66	MC6011,A	xx	7 5	30	10m	15		175	A2m
67	OAZ205	5	7 5	30	1 0m	28	5 3	150J	C1c
68	OAZ211	15	7 5	30	1 0m	28	5 3	150J	C1c
69#	Z1A7 5	1	7 5	320m	5 0m	8 0	7 0 △	150A	C29
70#	Z1B7 5	5	7.5	320m	5.0m	8 0	7.0 △	150A	C29
71#	Z1C7 5	10	7 5	320m	5 0m	8 0	7 0 △	150A	C29
72#	Z1D7 5	15	7 5	320m	5 0m	8 0	7 0 △	150A	C29
73	LDZ70/7A5	5	7 5	360m	20m	6 0		150J	M401
74#	1N755	10	7 5	400m	20m	6 0	4 5	175A	A1
75#	1N755A	5	7.5	400m	20m	6 0	4 5	175A	A1
76	JAN1N755A	5	7 5	400m	20m	4 0	5.8	175A	A1dd
77	1N958,A,B	xxx	7 5	40	17m	5 5	4 5	175S	DO7
78	1N3515	5	7 5	.40	10m	4 0	4 5	200A	DO7
79	JAN1N4100	5	7.5	400m	250u	200	6 5	175A	A1sx
80	1N5527	20	7 5	400m§	1.0m			175A	DO7
81	1N5527A	10	7 5	400m§	1 0m			175A	DO7
82	1N5527B	5	7 5	400m§	1 0m	35		175A	DO7
83▼	JAN1N5527B	5	7 5	400m	1.0m	35	5 8	200A	DO14
84	1N5527C	2	7 5	400m§	1.0m	35		175A	DO7
85	1N5527D	1	7 5	400m§	1 0m	35		175A	DO7
86▼	1N5733B	5	7 5	400m	10m	10	5 3	200J	DO35
87#	1S2075	10	7.5	40	5 0m	15	5 0	150A	A1
88#	1S2075A	5	7 5	40	5 0m	15	5 0	150A	A1
89#	1S7075,B	x15	7 5	40	5 0m	15	5 0	150A	A1
90#	1S7075A	5	7 5	40	5 0m	15	5 0	150A	A1
91#	5517	5	7 5	40	5.0m	7 0	4 0	125A	A1ce
92#	BZX46C7V5	5	7 5	400m	16	5 5	5 5	175J	DO35
93▼#	BZX71B7V5	2	7 5	400m§	5.0m	15		175J	DO35
94#	BZX71C7V5	5	7 5	400m§	5.0m	7 0		200S	A9m
95#	BZX74C7V5	5	7 5	400m	25m	100	4 5		A31e
96#	BZX79C7V5	5	7 5	400m	5 0m	15	40	200J	A257
97#	BZX83C7V5	5	7.5	400m	5 0m	7 0	4 5	150J	DO35
98▼#	BZY85B7V5	2	7 5	400m	5 0m	7.0	4 0	150J	DO7
99#	BZY88C7V5	5	7 5	40	5 0m	3 0 ∅		150	DO7
100	C4013	10	7 5	40	17m	5 5		175	A134a
101	C6013	10	7 5	400m	1.0m	20 ∅	4 5	175A	M371c
102	C6013A	5	7 5	400m	1 0m	20 ∅	4 5	175A	M371c
103	C6113	10	7 5	400m	1 0m	20	4 5	175A	M131a
104	C6113A	5	7 5	400m	1 0m	20	4 5	175A	M131a
105	CZA7 5D,10,5	xxx	7 5	40 ∅	250u	200	4 5	175J	M371
106	CZB7 5D,10,5	xxx	7 5	400m∅	8 3m	8 0	4 5	175J	M371
107	CZC7.5D,10,5	xxx	7 5	400m∅	16m	5.5	4 5	175J	M371
108	CZD7.5D,10,5	xxx	7.5	40 ∅	250u	200	4 5	175J	M451
109	CZE7 5D,10,5	xxx	7 5	400m∅	16m	5 5	4 5	175J	M451
110	CZF7.5D,10,5	xxx	7 5	40 ∅	250u	200	4 0	175J	M452
111	CZG7 5D,10,5	xxx	7 5	.40 ∅	20m	6 0	5 7	175J	M452
112	HM7 5,A,B	xxx	7 5	400m§	16m	5 5		175A	A196c
113#	HS7075	5	7 5	40	5.0m			175A	DO7
114#	KS075A	5	7 5	40	5 0m	15	9 5 △	150A	DO7
115#	LR75CH	5	7 5	40	5 0m	15	4 5	150S	DO7
116	M4Z7 5,A,-20	xx*	7 5	40	16m	5 7		150A	A1kk
117#	M7.5Z	5	7 5	400m	5 0m	700	4 5		A31e
118	MACZA7 5D,10,5	xxx	7 5	40 ∅	250u	200	4 5	175J	M453
119	MACZB7 5D,10,5	xxx	7 5	40 ∅	8.3m	8 0	4 5	175J	M453
120	MACZC7.5D,10,5	xxx	7 5	400m∅	16m	5 5	4 5	175J	M453
121	MACZD7 5D,10,5	xxx	7 5	40 ∅	250u	200	4 5	175J	M453
122	MACZE7 5D,10,5	xxx	7.5	400m∅	16m	5 5	4 5	175J	M453
123	MACZF7 5D,10,5	xxx	7 5	40 ∅	250u	200	4 0	175J	M453
124	MACZG7 5D,10,5	xxx	7 5	.40 ∅	20m	6 0	5 7	175J	M453
125	MBCZA7 5D,10,5	xxx	7 5	40 ∅	250u	200	4 5	175J	M454
126	MBCZB7 5D,10,5	xxx	7 5	40 ∅	8 3m	8 0	4 5	175J	M454
127	MBCZC7 5D,10,5	xxx	7 5	400m∅	16m	5 5	4 5	175J	M454
128	MBCZD7.5D,10,5	xxx	7 5	40 ∅	250u	200	4 5	175J	M454
129	MBCZE7 5D,10,5	xxx	7 5	400m∅	16m	5 5	4 5	175J	M454
130	MBCZF7 5D,10,5	xxx	7 5	400m∅	250u	200	4 0	175J	M454
131	MBCZG7 5D,10,5	xxx	7 5	40 ∅	20m	6 0	5 7	175J	M454
132	MCCZA7 5D,10,5	xxx	7 5	40 ∅	250u	200	4 5	175J	M455
133	MCCZB7 5D,10,5	xxx	7 5	.40 ∅	8 3m	8 0	4 5	175J	M455
134	MCCZC7 5D,10,5	xxx	7 5	400m∅	16m	5 5	4 5	175J	M455
135	MCCZD7 5D,10,5	xxx	7 5	.40 ∅	250u	200	4 5	175J	M455
136	MCCZE7 5D,10,5	xxx	7 5	400m∅	16m	5 5	4 5	175J	M455
137	MCCZF7 5D,10,5	xxx	7 5	40 ∅	250u	200	4 0	175J	M455
138	MCCZG7 5D,10,5	xxx	7 5	.40 ∅	20m	6 0	5.7	175J	M455
139	MDCZA7.5D,10,5	xxx	7 5	40 ∅	250u	200	4 5	150A	M410
140	MDCZB7 5D,10,5	xxx	7 5	40 ∅	8 3m	8 0	4 5	150A	M410
141	MDCZC7 5D,10,5	xxx	7 5	400m∅	16m	5 5	4 5	150A	M410
142	MDCZD7 5D,10,5	xxx	7 5	40 ∅	250u	200	4 5	150A	M410
143	MDCZE7 5D,10,5	xxx	7 5	400m∅	16m	5 5	4 5	150A	M410
144	MDCZF7 5D,10,5	xxx	7 5	.40 ∅	250u	200	4 0	150A	M410
145	MDCZG7 5D,10,5	xxx	7 5	.40 ∅	20m	6 0	5 7	150A	M410
146	MZ500-13	10	7 5	4 §	20m	10 ∅	5 8	175J	DO7
147	MZC7 5A10	†	7 5	400m§	6.7m	43	5 8 △	175J	M468
148	MZC7.5B10	§†	7 5	400m§	250u	200		175J	M468
149	WZ527	5	7 5	.40	10m	5 0		150A	A31e
150#	Z5A7 5	1	7 5	400m§	5 0m	10	7 0 △	200J	A1hs
151#	Z5B7.5	5	7 5	400m§	5 0m	10	7 0 △	200J	A1hs
152#	Z5C7.5	10	7 5	400m§	5 0m	10	7 0 △	200J	A1hs
153#	Z5D7 5	15	7 5	400m§	5 0m	10	7 0 △	200J	A1hs
154#	ZF7 5	5	7 5	400m	5.0m	7 0	4 5	150J	DO7
155#	ZP7 5#	5	7 5	400m	5.0m	7 0	5 0	150J	DO7
156	1/2Z7 5T5	5	7 5	.50	17m	4.4		175	A94f
157	1N3413	10	7 5	.50	1 0m	150	1 0	200A	P5
158	1N5236	20†	7 5	.50	20m			200A	DO7
159	1N5236A,B	§∅	7 5	.50	20m	4 0	5 8	200A	DO7
160	MCPD535B	10	7 5	500m	10m	15		150A	M411a
161	MCPD535C	10	7 5	500m	10m	15		150A	M277d
162	MTZ611,A	xx	7 5	50	10m	15		175A	A60e
163	MZ92-7 5	†	7 5	500m§	20m		5 5	150J	C103
164	PS8910	5	7 5	50	20m	2 0	5.5	150	A60p
165	S5236,A,B	xxx	7 5	500m	20m	6 0	5 8	175	DO41
166#	ZSF7.5	1	7 5	500m	7 0m	10	1 0	150S	M487a
167#	Z0A7 5	1	7 5	520m	5 0m	4 0	7 0 △	150J	A1ef
168#	Z0B7 5	5	7 5	520m	5.0m	4 0	7 0 △	150J	A1ef
169#	Z0C7 5	10	7 5	520m	5 0m	4 0	7 0 △	150J	A1ef
170#	Z0D7 5	15	7 5	520m	5.0m	4.0	7 0 △	150J	A1ef
171	1N4629	5	7 5	60	17m	700	6 6	200A	DO14
172	LVA75A	5	7 5	600m	1 0m	100			DO14
173	LVA75B	2	7 5	600m	1 0m	100			DO14
174	LVA375A	5	7.5	600m	1 0m	50			DO14
175	LVA375B	2	7 5	600m	1 0m	50			DO14
176#	UZ7.5	10	7 5	60	80m	3 0	5 0	135A	DO3
177#	ZW7.5	5	7 5	600m	5 0m	7 0	4 5	150J	A1bg
178	7JZ7 5	†	7 5	750m	16m	5 5	4.5	175	DO15
179	7Z7.5,A,B,D	xxxx	7 5	750m	16m	5 5	4 5	175	DO27
180	7Z7 5C	∅	7 5	750m	16m	5 5	4 5	175	DO27

SYMBOLS AND CODES EXPLAINED IN INTERPRETER

2. SILICON REFERENCE DIODES

IN ORDER OF (1) REF. VOLTAGE, (2) DISSIPATION, and (3) TYPE No.

LINE No.	3 TYPE No.	TOLERANCE 1 20 10 5 2 ± (%)	NOM. REF. VOLT. (V)	2 MAX. DISS. @ 25°C (W)	TEST CUR. Izt (A)	MAX. DYN. IMP. (Ω)	TEMP. COEFF Tc	MAX. TEMP (°C)	DWG. No.
1	7ZM7.5,A,B,D								
		xxxx	7.5	750m	16m	5 5	4 5	175	DO41
2	7ZM7 5C	∅	7 5	750m	16m	5 5	4 5	175	DO41
3	1N2034-3	5	7 5	75	10m	8.0	4 0	150J	DO12
4	1N3676	20	7.5	750m§	17m	5 5		175S	A1az
5	1N3676A	10	7 5	750m§	17m	5.5		175S	A1az
6	1N3676B	5	7.5	750m§	17m	5 5		175S	A1az
7	MC6111,A	xx	7.5	75	25m	15		175A	A2d
8	MMZ7 5,A,-20								
		xx*	7 5	75	16m	5.5		150A	A1kk
9	MZ7.5T20,10,5								
		xxx	7 5	75	22m	4 5	5 0	165A	A152
10	SV1010	5	7 5	75	10m	8 0 ∅	8 0	150	A82f
11	WZ910	5	7.5	.75	10m	8 0		150A	A1ep
12	1A7.5M,A,B	xxx	7 5	1 0	34m	4 0		75A	DO15
13	1E7 5Z 10,5								
		xxx	7.5	1 0	34m	4 0	4 5	150A	A52g
14	1N1768,A	xx	7 5	1 0	100m	2 1		175S	DO13
15	1N3017	20	7.5	1.0	34m	4 0		175A	A31a
16	1N3017A	10	7.5	1 0	34m	4 0		175A	A31a
17	1N3017B	5	7.5	1 0	34m	4 0		175A	A31a
18	JAN1N3017B	5	7 5	1 0	34m	4 0	6.1	175A	A31c
19	1N3830,A	xx	7.5	1 0	34m	1 5	4.5	175A	A31a
20	1N4159	20	7.5	1 0	34m	4 0	4 5	175	DO29
21	1N4159A	10	7 5	1 0	34m	4 0	4 5	175	DO29
22	1N4159B	5	7.5	1 0	34m	4 0	4.5	175	DO29
23	1N4324,A,B	xxx	7.5	1 0	34m	4 0	4 5	300S	DO7
24♦	1N4401	20	7 5	1 0	34m	2 0		175S	A266a
25	1N4401A	10	7 5	1 0	34m	2 0	4 5	175A	A1cm
26	1N4401B	5	7 5	1 0	34m	2 0	4.5	175A	A1cm
27	1N4658	5	7.5	1 0	34m	200	6 1	200A	DO15
28	1N4737	10	7.5	1 0	34m	4 0		200A	A1ay
29	1N4737A	5	7.5	1 0	34m	4.0		200A	A1ay
30	1N5560	20	7.5	1 0 §	34m			200A	A196d
31	1N5560A	10	7.5	1.0 §	34m	4.0		200A	A196d
32	1N5560B	5	7 5	1 0 §	34m	4 0		200A	A196d
33	1N5630		7 5	1 0	10m		6 1	175A	DO13
34	1N5630A		7 5	1 0	10m		6 1	175A	DO13
35#	1S223	10	7.5	1 0	35m	3 0		150J	A56a
36#	1S3007	xx	7 5	1 0	50m	2.0	4 5	150	A3
37	1Z7 5,A,B	xxx	7 5	1 0	34m	4 0		150	A1ay
38	1Z7 5T20,10,5								
		xxx	7 5	1 0	30m	5.0	5 0	165A	A89c
39#	1ZC7 5T10,5								
		xx	7 5	1 0	30m	6 0	5 0	165A	A31p
40#	20Z6F,AF	12,6	7 5	1.0	10m	14	7.0	150J	DO13
41▼#	BZ075	5	7 5	1 0	30m	6 0	4 7	175J	A60t
42#	BZX29C7V5	5	7.5	1 0	20m	4 0	4 5	175J	A1cd
43#	BZX61C7V5	5	7.5	1 0	20m	6.0	4 0	175J	A3y
44♦	BZX85C7V5	5	7.5	1 0	35m	3 0	5 0	150A	DO15
45	CD31-00010	5	7 5	1 0	34m	4 0	4.5	200A	A1ce
46	CD31-12017	5	7 5	1 0	34m	4 0		200A	A1ce
47	CD32-12047	5	7 5	1.0	34m	4 0			
48	CZ7 5,A,B,D								
		xxxx	7 5	1 0	40m	12	4 5	175	DO15
49	CZ7 5C	∅	7 5	1 0	40m	12	4 5	175	DO15
50	EVR7,A,B	xxx	7 5	1 0	34m	12		175A	DO27
51#	FPZ7V5	5	7.5	1.0	34m	400	4 5		A31h
52	G7 5T20,10,5								
		xxx	7 5	1.0	34m	4 0	5.5	175A	DO15
53#	GZ7 5	5	7 5	1 0	25m	20 △		150A	S115
54	HW7.5,A,B	xxx	7 5	1 0	34m	4 0		175	A196
55	JZ7 5,A,B,D								
		xxxx	7.5	1 0	34m	4 0	4 5	175	DO15
56	JZ7 5C	∅	7 5	1 0	34m	4 0	4 5	175	DO15
57	LPM7 5,A,-20								
		xx*	7.5	1 0	34m	4 0		150A	A1kk
58	PS10017B	5	7 5	1 0	34m	4 0		175A	A60p
59	PS10061	5	7 5	1 0	34m	2.0	6.1	150	A60p
60	SZ7 5	xxxx	7 5	1 0	20m	1 5 ∅	4 4	150A	A3g
61	TZ7 5,A,B,D								
		xxxx	7.5	1 0	40m	12	4.5	175	DO27
62	TZ7.5C	∅	7 5	1 0	40m	12	4.5	175	DO27
63	UZ8707	5	7 5	1 0	34m	4 0	4.0	175	A146h
64	UZ8807	10	7 5	1.0	34m	4 0	4.0	175	A146h
65	VR7.5,A,B	xxx	7 5	1 0	34m	4 0		125A	A1b
66#	Z2A75F	20§∅	7 5	1 0	20m	15	5 0	100J	A141
67#	Z4A7.5	1	7 5	1 0	100m	1 0	7.0 △	150J	A1ef
68#	Z4B7 5	5	7 5	1 0	100m	1 0	7 0 △	150J	A1ef
69#	Z4C7.5	10	7 5	1.0	100m	1 0	7 0 △	150J	A1ef
70#	Z4D7.5	15	7 5	1 0	100m	1 0	7.0 △	150J	A1ef
71	Z4XL7 5,B	xx	7 5	1.0	20m	12	4 4	165A	DO13
72	Z7 5,A,B,D	xxxx	7 5	1 0	34m	4 0	4 5	175	DO27
73	Z7 5C	∅	7 5	1 0	34m	4.0	4 5	175	DO27
74	ZA7.5,A,B	xxx	7 5	1.0	34m	4.0		150C	A1ew
75	ZB7 5#	†	7 5	1 0 §	34m	4.0		150A	A1bc
76	ZD7.5∅,A,B	xxx	7 5	1 0	34m	4 0	4.5	175A	A1cm
77	ZH7 5,A,B	xxx	7 5	1 0	34m	4 0	4.5	175A	DO1
78	ZM7.5,A,B,D								
		xxxx	7.5	1 0	34m	4 0	4 5	175	DO41
79	ZM7 5C	∅	7 5	1 0	34m	4.0	4.5	175	DO41
80#	7717	5	7 5	1 1	100m	2.0	4 0	125A	A1bu
81#	BZY92C7V5	5	7 5	1.1	100m	2 0	3 0	150J	DO13
82#	ZD7 5#	5	7 5	1 3	100	2 0	4 0	150J	DO13
83#	ZY7.5	5	7 5	1.3	100	2 0	4.0	150J	A1bg
84▼	1N3786	20	7 5	1.5	50m	3 0	6.1	175S	C14∅
85▼	1N3786A	10	7 5	1 5	50m	3 0	6 1	175S	C14∅
86▼	1N3786B	5	7 5	1.5	50m	3 0	6 1	175S	C14∅
87	1N4462	5	7 5	1 5	34m	2 5		175A	A196
88	JAN1N4462	10	7 5	1 5	34m	2 5	6 1	175A	A1v
89#	1S4007,A	xx	7 5	1 5	50m	1 2	4.5	150A	DO1
90	1 5DKZ7 5,A,B								
		xxx	7 5	1 5	50m	3 0		175A	DO27
91	1 5JZ7 5,A,B,D								
		xxxx	7 5	1.5	50m	3 0	6.1	175	DO15
92	1 5JZ7 5C	∅	7.5	1 5	50m	3 0	6 1	175	DO15
93	1 5Z7 5,A,B,D								
		xxxx	7 5	1 5	50m	3 0	6 1	175	DO27
94	1 5Z7 5C	∅	7 5	1 5	50m	3 0	6 1	175	DO27
95#	BZY75	15	7 5	1 5	20m			150J	DO4

LINE No.	3 TYPE No.	TOLERANCE 1 20 10 5 2 ± (%)	NOM. REF. VOLT. (V)	2 MAX. DISS. @ 25°C (W)	TEST CUR. Izt (A)	MAX. DYN. IMP. (Ω)	TEMP. COEFF Tc	MAX. TEMP (°C)	DWG. No.
96#	BZY96C7V5	5	7 5	1.5	50m	3.5	4 0	175J	DO1
97	MC6311,A	xx	7.5	1.5	100m	14			A1q
98	MZ1000-10	10	7.5	1 5 §	34m	6.0 ∅	5.8	175J	A1ay
99#	SZ75A	5	7.5	1 5	20m	12	5.0	160A	A26
100#	Z2A7.5	1	7.5	1.5	100m	2.0	7 0 △	150J	A244
101#	Z2B7.5	5	7.5	1 5	100m	2 0	7 0 △	150J	A244
102#	Z2C7.5	10	7.5	1 5	100m	2.0	7 0 △	150J	A244
103#	Z2D7.5	15	7.5	1 5	100m	2.0	7 0 △	150J	A244
104#	Z3A7.5	1	7.5	1 5	100m	2.0	7 0 △	150J	S4f
105#	Z3B7.5	5	7.5	1 5	100m	2 0	7 0 △	150J	S4f
106#	Z3B75CF	20§∅	7.5	1.5	20m	4.0	5 5	175J	DO1
107#	Z3C7.5	10	7.5	1 5	100m	2 0	7 0 △	150J	S4f
108#	Z3D7.5	15	7.5	1 5	100m	2 0	7 0 △	150J	S4f
109#	60Z6,A	12,6	7.5	1 8	100m	10	70	150J	DO4
110	2VR7 5,A,B	xxx	7 5	2 0	67m	3.0			A3e
111#	BZZ17	10	7 5	2 0	20m	7.5		150J	DO4
112	LMZ7 5,A,-20								
		xx*	7.5	2 0	66m	5.5		150A	A1kk
113	ZBC7.5	†	7.5	2.0 §	68m	2 0		150A	A1bc
114	1N5017	10	7 5	2.5	83m	1 8	4 5	150	A1gn
115	1N5017A	5	7.5	2.5	83m	1 8	4 5	150	A1gn
116#	BZX70C7V5	5	7.5	2.5	50m	3 5	30	150J	A171b
117	1N5064	5	7.5	3 0	75m	2.0		175A	A146j
118	3R7 5,A,B	xxx	7 5	3.0	100m	2 0	4 5	175A	A1rw
119	3TZ7 5,A,B,D								
		xxxx	7.5	3 0	100m	3 0	5.0	175	A1ec
120	3TZ7 5C	∅	7.5	3 0	100m	3 0	5 0	175	A1ec
121	3VR7 5,A,B	xxx	7.5	3 0	10	2 0			A222
122	CZ5064	10	7 5	3 0	75m	2 0	35	175A	A196e
123	M3Z7 5,A	xx	7 5	3 0	100m	3 3		150A	A1kk
124	MZ707	5	7.5	3 0	75m	2 0	4 0	175A	A146j
125	MZ807	10	7.5	3 0	75m	2 0	4 0	175A	A146j
126	MZ907	20	7 5	3 0	75m	2.0	4 0	175A	A146j
127	UZ707	5	7 5	3.0	75m	2 0	4 0	175A	A60
128	UZ807	10	7 5	3.0	75m	2 0	4 0	175A	A146f
129	UZ907	20	7.5	3 0	75m	2 0	4 0	175A	A60
130	ZAC7 5,A,B	xxx	7 5	3 0	34m	4.0		150C	A1ey
131	ZCC7.5	†	7 5	3 0 §	75m	2 0		150A	A1ey
132	3T7 5,A,B	xx*	7 5	3 5	100m	2 1			DO4
133	3Z7 5T20,10,5								
		xxx	7 5	3.5	100m	1.9	5 0	165	DO4
134	1N4955	5	7 5	5 0	175m	1 5		175A	A146m
135	JAN1N4955	5	7 5	5.0	175m	1 5	6 0	175A	A248f
136♦	1N5343	20	7 5	5 0	175m			200A	A1ee
137▼	1N5343A	10	7 5	5 0	175m	1 5		200A	A1ee
138▼	1N5343B	5	7.5	5 0	175m	1 5		200A	A1ee
139▼	5ZS7.5,A,B	xxx	7 5	5.0 §	175m	1 5		200A	A1ts
140#	1307	10∅	7 5	5.0	100m	2 0	4.0	150J	A9h
141▼	CTZC7 5,A,B,D∅								
		xxxx	7 5	5 0 §	175m	1 5 ∅	4 5	175A	A1ey
142▼	CTZC7.5C∅	1	7 5	5 0 §	175m	1 5 ∅	4.5	175A	A1ey
143▼	CTZC7 5E∅	3	7 5	5 0 §	175m	1 5 ∅	4 5	175A	A1ey
144	DSZ5707	5	7.5	5 0	175m	2 0	6 0	175A	A60r
145	DSZ5807	10	7 5	5 0	175m	2.0	6.0	175A	A60r
146	MZ5707	5	7.5	5.0	175m	1 5	4 0		A60f
147	MZ5807	10	7 5	5.0	175m	1 5	4 0		A60f
148	MZ5907	20	7.5	5 0	175m	1 5	4 0		A60f
149▼	TZC7.5,A,B,D								
		xxxx	7 5	5.0 §	175m	1 5 ∅	4 5	175A	A1ey
150▼	TZC7.5C	1	7 5	5.0 §	175m	1 5 ∅	4.5	175A	A1ey
151▼	TZC7 5E	3	7 5	5.0 §	175m	1.5 ∅	4 5	175A	A1ey
152▼	UZ5707	5	7.5	5.0	175m	1 5	6 0	175A	A146m
153♦	UZ5807	10	7 5	5.0	175m	1 5	6.0	175A	A146m
154	UZ5907	20	7 5	5 0	175m	1 5 ∅	4 0	175A	A146m
155	ZC7.5	†	7 5	5.0 §	175m	1 5		150A	A1ey
156	UZ4707	5	7 5	8.0	175m	1 5		175A	A146m
157	UZ4807	10	7 5	8.0	175m	1 5		175A	A146m
158	1N1806,A	xx	7.5	10	1	1 0		175A	DO4
159	1N1806B	20	7 5	10	1	1 0			S11e
160	1N1806C,CA∅								
		xx	7 5	10 §	1 0	1 0		175J	S19a
161	1N2043-3	5	7.5	10	1	80	4 0	150J	DO4
162	1N2971,A,B	xxx	7 5	10	335m	1 3		175C	DO4∅
163	JAN1N2971B,RB								
		5	7 5	10	335m	1.3	6.1	150C	DO4
164	1N4000,A	xx	7 5	10	335m	1 3		175S	DO4
165	JAN1N4000A,RA								
		5	7 5	10 §	.34	1.3	6 1	150A	DO4
166	1N4259	20	7 5	10	335m	1 3	4 5	175C	S134
167	1N4259A	10	7 5	10	335m	1 3	4 5	175C	S134
168	1N4259B	5	7 5	10	335m	1.3	4 5	175C	S134
169	JAN1N4259B	5	7 5	10 §	335m	1.3	6.1	175S	S134a
170#	1S265	10	7 5	10	350m	1 3		150J	S19g
171#	1S6007	10	7 5	10	200m	4.0	4 0	150	DO4
172#	1S6007A	5	7 5	10	200m	2 5	4.0	150	DO4
173	10PZ7.5,A,B,D								
		xxxx	7.5	10	335m	1.3	4.5	175	DO4
174	10PZ7.5C	∅	7.5	10	335m	1 3	4 5	175	DO4
175	10RZ7 5,A,B,D								
		xxxx	7.5	10	800m	4.0	4.5	155	DO4
176	10RZ7 5C	∅	7 5	10	800m	4.0	4 5	155	DO4
177	10Z7 5T20,10,5								
		xxx	7.5	10	300m	.75	5.0	165	DO4
178#	OAZ225	5	7.5	10	20m	7 5		150J	DO4
179#	OAZ291	15	7.5	10	20m	2 2 ∅	5.0	150	DO4
180	UZ7707	5	7.5	10	325m	.70	4.0	175	S277∅
181	UZ7807	10	7 5	10	325m	70	4 0	175	S277∅
182	UZ7907	20	7 5	10	325m	70	4.0	175	S277∅
183#	1207	10∅	7 5	15	500m	50	4 0	150J	S87
184#	BZY93C7V5	5	7 5	20 §	2	.30	3 0	175J	DO4∅
185#	80Z6,A	12,6	7 5	25	400m	1 8	6 0	150J	S179
186#	ZX7.5	5	7.5	25 ∅	100	2 0	4 0	150J	M41
187	1N2805,A,B	xxx	7 5	50	1 7	30	4 5	175S	C5a
188	JAN1N2805B,RB								
		5	7.5	50	1 7	.30	6.1	150C	C5a
189	1N3306	20	7 5	50	1 7	300m	4 5	175J	DO5
190	1N3306A	10	7 5	50	1 7	300m	4 5	175J	DO5
191	1N3306B	5	7 5	50	1 7	300m	4 5	175J	DO5
192	JAN1N3306B,RB								
		5	7 5	50	1 7	.30	6 1	150	DO5

SYMBOLS AND CODES EXPLAINED IN INTERPRETER

2. SILICON REFERENCE DIODES

IN ORDER OF (1) REF. VOLTAGE, (2) DISSIPATION, and (3) TYPE No.

LINE No.	3 TYPE No.	TOLERANCE 20 10 5 2 ± (%)	1 NOM. REF VOLT (V)	2 MAX. DISS. @ 25°C (W)	TEST CUR. Izt (A)	MAX. DYN. IMP. (Ω)	TEMP. COEFF Tc	MAX TEMP (°C)	DWG. No.
1	1N4556,A,B	xxx	7 5	50	1 6	24	5.7	175J	DO5
2	1N4564,A,B	xxx	7 5	50	1 6	24	5 7	175J	C5a
3	50T7 5,A,B	xx*	7 5	50	1 7	300m	4 5		S19e
4#	BZY91C7V5	5	7 5	75 §	5	20	10	175J	DO5∅
5	250ZE7 5	10	7 5	250 §	20		8.0	190A	S83
6	250ZF7 5	10	7 5	250 §	20		8.0	190A	M56a
7	LID7 5,A	xx	7 5	400	16m	5 6		150A	M401
8	653C7	5	7.6	15	5 0m	7 0	5 0	150A	C3
9	MC6408A	xxx	7 65	.25	7 5m	15	1 0	75R	M277c
10	MC6408B	xxx	7 65	.25	7 5m	15	1 0	75R	A188
11	MC6409A	xxx	7 65	25	7 5m	15	1 0	100R	M277c
12	MC6409B	xxx	7 65	25	7 5m	15	1 0	100R	A188
13	MC6410A	xxx	7.65	25	7 5m	15	50	75R	M277c
14	MC6410B	xxx	7 65	.25	7 5m	15	.50	75R	A188
15	MC6411A	xxx	7 65	25	7 5m	15	.50	100R	M277c
16	MC6411B	xxx	7 65	25	7 5m	15	50	100R	A188
17	MC6412A	xxx	7 65	25	7 5m	15	20	75R	M277c
18	MC6412B	xxx	7 65	25	7 5m	15	20	75R	A188
19	MC6413A	xxx	7 65	25	7 5m	15	20	100R	M277c
20	MC6413B	xxx	7 65	25	7 5m	15	20	100R	A188
21	MC6414A	xxx	7 65	25	7 5m	15	10	75R	M277c
22	MC6414B	xxx	7 65	25	7 5m	15	.10	75R	A188
23	MC6415A	xxx	7 65	25	7 5m	15	.10	100R	M277c
24	MC6415B	xxx	7 65	25	7 5m	15	10	100R	A188
25	MC6426A	xxx	7 65	25	7 5m	15	.05	75R	M277c
26	MC6426B	xxx	7 65	25	7 5m	15	10	75R	A188
27	MC6427A	xxx	7 65	.25	7 5m	15	05	100R	M277c
28	MC6427B	xxx	7 65	25	7 5m	15	10	100R	A188
29	MC6408C	xxx	7 65	40	7 5m	15	1 0	75R	A1as
30	MC6409C	xxx	7 65	40	7 5m	15	1 0	100R	A1as
31	MC6410C	xxx	7 65	40	7 5m	15	.50	75R	A1as
32	MC6411C	xxx	7 65	40	7 5m	15	50	100R	A1as
33	MC6412C	xxx	7 65	.40	7 5m	15	.20	75R	A1as
34	MC6413C	xxx	7 65	40	7 5m	15	.20	100R	A1as
35	MC6414C	xxx	7 65	40	7 5m	15	10	75R	A1as
36	MC6415C	xxx	7 65	40	7 5m	15	10	100R	A1as
37	MC6426C	xxx	7 65	400m	7 5m	15	50m	75R	A1as
38	MC6427C	xxx	7 65	400m	7 5m	15	50m	100R	A1as
39▼	BLVA177	2 5	7 7	250m	250u	500	2.0	150A	A9n
40▼	BLVA477	2 5	7 7	250m	250u	350	2 0	150A	A9n
41▼	LVA177	2 5	7 7	400m	250u	350	5 8	150A	DO14
42▼	LVA477	2 5	7 7	400m	250u	175	5 8	150A	DO14
43	1N3181∅	10	7 7	60	14m	10	4 9	100	C42u
44	IDAZ3181,A,B,C∅	xxxx	7.7	600m	14m	10	4 9	175	A1hc
45	STB12*	10	7 8		10m			175A	A1fg
46	653C8	5	7 8	15	5 0m	7 0	5 0	150A	C3
47	1N2044A	5	8 0		1	80		150A	S19a
48	653C9	5	8 0	15	5 0m	8 0	5 1	150A	C3
49	1N764-1	5	8 0	.25	10m	12	5 0	150	DO7
50#	1S333	8 0	8 0	.25	10m	20	7 0	150J	A1ce
51▼	BLVA180	2 4	8 0	250m	250u	500	2.3	150A	A9n
52▼	BLVA480	2 4	8 0	250m	250u	350	2 3	150A	A9n
53#	MZ1008	8	8 0	250m	10m	10	5 0	175J	DO7
54	SV128	5	8.0	25	10m	15 ∅	5.0	150	DO7
55#	SZ8	8	8 0	25	5 0m	15	68	150J	C1f
56#	BZZ13	10	8 0	28	1 0m	6 0		150J	DO7
57#	1S193	8 0	8 0	40	20m	8 0	6 0	150J	A1ce
58▼	LVA180	2.4	8 0	400m	250u	350	6 0	150A	DO14
59▼	LVA480	2 4	8 0	400m	250u	175	6.0	150A	DO14
60	WZ528	5	8 0	40	10m	5 0		150A	A31e
61#	ZC008	5	8 0	.60	1 0m	60	4 2	100	A3k
62#	ZD008	10	8 0	60	5 0m	60	4 2	100	A3k
63	1N2035A	5	8 0	75	10m	15	6 0	150J	DO12
64	SV1011	5	8 0	75	10m	15 ∅	5 0	150	A82f
65	WZ911	5	8 0	.75	10m	15 ∅		150A	A1ep
66#	SZL8	8	8 0	1 3	50m	3 5		150J	M72
67#	ZC2008	5	8 0	1 8	1 0m	60	4 2	150	DO3
68#	ZD2008	10	8 0	1.8	1 0m	60	4 2	150	DO3
69#	VR8F	5	8 0	2 2	20m	4 0		200S	DO3
70#	VR8E	5	8 0	5 8	20m	4 0		200S	DO4
71	1N2044-1	5	8 0	10	1	80	6 0	150J	DO4
72▼#	BZ081	5	8 1	1 0	30m	6 0	5 0	175J	A60t
73#	BZX55C8V2	6	8 2		5 0m	7 0			A1ct
74#	BZX55D8V2	10	8 2		5 0m	10			A1ct
75#	BZY84D8V2	10	8 2		100m	3 0	7.0		M72
76	DSZ3008	10	8 2		75m	3 0	5 0		A266
77#	RZ8 2	5	8 2	08	5 0m	40		150A	C18e
78#	RZZ8 2	5	8 2	08	5 0m	40		150A	C18e
79▼#	BZX84C8V2	5	8 2	110m	5 0m	20	6 0	125J	M500
80	1N1985	10	8 2	150m	5 0m	15	6 0	150	C1
81	1N1985A	5	8 2	150m	5 0m	15	6.0	150	C1
82	1N1985B	1	8.2	150m	5.0m	15	6.0	150	C1
83#	AZ8 2	5	8 2	15	5 0m	20		170A	DO7
84#	BZ8 2	5	8 2	15	5 0m	50		170A	DO7
85#	LZ8 2	10	8 2	15	5 0m	40		170A	DO7
86#	Z8 2∅	5	8 2	150m	5.0m	40		150A	C18d
87#	ZZ8 2	5	8 2	15	5 0m	40		150A	C18d
88	1N1931	10	8 2	200m	5 0m	15	6.0	150A	A82e
89	1N1931A	5	8 2	200m	5.0m	15	6 0	150A	A82e
90	1N1931B	1	8 2	200m	5 0m	15	6 0	150A	A82e
91	1/4A8 2,A,B	xxx	8 2	25	7 6m	9 0	5 0	175	DO7
92	1/4M8 2Z,10,5	xxx	8 2	25	7 6m	9 0	6 2	175J	A1cy
93	25N8 2	20	8 2	25	7 6m	9 0		250	DO7
94▼	1N712	10	8 2	250m	25m	6 0	5 3	175A	DO7
95▼	1N712A	5	8 2	250m	25m	6 0	5 3	175A	DO7
96	1N712B	20	8 2	25	25m	6 0			DO7
97	1N4101	5	8 2	25	25m	200		200J	DO7
98	1N4694	5	8 2	25	05m			200A	DO14
99▼#	1S2190	3	8 2	250m	10m	20	1 0	75A	C29p
100▼#	1S2191	3	8 2	250m	10m	20	500m	75A	C29p
101▼#	1S2192	3	8 2	250m	10m	20	200m	75A	C29p
102#	02Z8 2A	5	8 2	250m	8 0m	20	6 0	175J	DO35
103#	1108	10∅	8 2	.25	10m	6 0	5 0	150J	C18f
104#	BZY83C8V2	5	8 2	25	5.0m	7 0	7 △	150J	C1g
105#	BZY83D8V2	10	8 2	.25	5 0m	10	8 △	150J	C1g
106#	BZY85C8V2	5	8 2	.25 §	5 0m	7 0	7 △	150J	A171f
107	GLA82,A,B	xxx	8 2	25	1 0m	75	6 5	175	DO7

LINE No.	3 TYPE No.	TOLERANCE 20 10 5 2 ± (%)	1 NOM. REF. VOLT. (V)	2 MAX. DISS. @ 25°C (W)	TEST CUR. Izt (A)	MAX. DYN. IMP. (Ω)	TEMP. COEFF Tc	MAX TEMP (°C)	DWG No.
108#	HS2082	5	8 2	25	5 0m			175A	DO7
109#	KS2082A	5	8 2	250m	5 0m	15	7 0 △	150A	DO7
110#	KS2082B	10	8 2	250m	5 0m	15	8.0 △	150A	DO7
111	LAC2008	10	8 2	250m	1 0m	100			M520a
112	MGLA82,A,B	xxx	8.2	.25	1 0m	75	6 5	150	A2
113#	MR82C-H	5	8 2	25	5 0m	20		250	DO7
114#	MZ8A	10	8 2	.25	12m	11	4 0	150A	DO7
115	PD6012,A	xx	8 2	25	5 0m	8 0		150	A109
116	PD6053	5	8 2	25	5 0m	5 0		150	A2c
117	PD6208	10	8 2	250m	1 0m	100			A109
118#	OAZ246	5	8 2	278m	1 0m	6 2 ∅	50	150J	A24c
119#	BZY62	5	8 2	.28	1 0m	6 2		150J	A3
120	MC6012,A	xx	8 2	30	10m	16		175	A2m
121	OAZ206	5	8 2	30	1.0m	28	6 1	150J	C1c
122#	Z1D8 2	∅∅§§	8 2	3 §		30		150J	C29
123#	Z1A8.2	1	8.2	320m	5 0m	10	8.0 △	150A	C29
124#	Z1B8.2	5	8 2	320m	5 0m	10	8 0 △	150A	C29
125#	Z1C8 2	10	8 2	320m	5 0m	10	8.0 △	150A	C29
126	LDZ70/8A2	5	8 2	360m	20m	8 0		150J	M401
127	1N664	5	8 2	40	10m	7 0	5 0	200S	A31b
128#	1N756	10	8 2	400m	20m	8 0	5 2	175A	A1
129#	1N756A	5	8 2	400m	20m	8 0	5 2	175A	A1
130	JAN1N756A	5	8 2	400m	20m	5 0	6 2	175A	A1dd
131▼	1N959	20	8 2	400m	15m	6 5	4 8	175S	DO7
132▼	1N959A	10	8 2	400m	15m	6 5	4 8	175S	DO7
133▼	1N959B	5	8 2	400m	15m	6 5	4 8	175S	DO7
134	1N3516	5	8 2	40	10m	5 0	5 2	200A	DO7
135	JAN1N4101	5	8 2	400m	250u	200	7 0	175A	A1sx
136	1N5528	20	8.2	400m§	1 0m			175A	DO7
137	1N5528A	10	8 2	400m§	1 0m			175A	DO7
138	1N5528B	5	8.2	400m§	1 0m	40		175A	DO7
139▼	JAN1N5528B	5	8 2	400m	1 0m	40	6 2	200A	DO14
140	1N5528C	2	8 2	400m§	1 0m	40		175A	DO7
141	1N5528D	1	8 2	400m§	1 0m	40		175A	DO7
142▼	1N5734B	5	8 2	400m	10m	15	6 0	200J	DO35
143#	1S2082	10	8 2	40	5 0m	15	6 0	150A	A1
144#	1S2082A	5	8.2	40	5 0m	15	6 0	150A	A1
145#	1S7082,A,B	xx$	8 2	.40	5 0m	15	6 0	150A	A1
146#	5518	5	8 2	40	5 0m	7 0	4 5	125A	A1ce
147#	BZX46C8V2	5	8 2	400m	15	6 5	6 0	175J	DO35
148▼#	BZX71B8V2	2	8 2	400m§	5 0m	15		175J	DO35
149#	BZX71C8V2	5	8 2	400m§	5 0m	7 0		200S	A9m
150#	BZX74C8V2	5	8 2	400m	25m	100	5 3		A31e
151#	BZX79C8V2	5	8 2	400m	5 0m	15	50	200J	A257
152#	BZX83C8V2	5	8 2	400m	5 0m	7 0	5.0	150J	DO35
153▼#	BZY85B8V2	2	8 2	400m	5 0m	7 0	4 7	150J	DO7
154#	BZY85D8V2	10	8 2	400m	5 0m	8 0	4 7	150J	A1su
155#	BZY88C8V2	5	8 2	40	5 0m	3 5 ∅		150	DO7
156	C4014	10	8 2	40	15m	6 5		175	A134a
157	C6014	10	8 2	400m	1 0m	20 ∅	5 0	175A	M371c
158	C6014A	5	8 2	400m	1 0m	20 ∅	5 0	175A	M371c
159	C6114	10	8.2	400m	1 0m	20	5 0	175A	M131a
160	C6114A	5	8 2	400m	1 0m	20	5 0	175A	M131a
161	CZA8 2D,10,5	xxx	8 2	40 ∅	250u	200	4 8	175J	M371
162	CZB8 2D,10,5	xxx	8 2	40 ∅	7 6m	9 0	4 8	175J	M371
163	CZC8 2D,10,5	xxx	8 2	40 ∅	15m	6 5	4 8	175J	M371
164	CZD8.2D,10,5	xxx	8 2	40 ∅	250u	200	4 8	175J	M451
165	CZE8 2D,10,5	xxx	8 2	40 ∅	15m	6 5	4 8	175J	M451
166	CZF8 2D,10,5	xxx	8 2	40 ∅	250u	200	4 2	175J	M452
167	CZG8 2D,10,5	xxx	8 2	40 ∅	20m	8 0	6.0	175J	M452
168	HM8.2,A,B	xxx	8 2	400m§	15m	6 5		175A	A196c
169#	HS7082	5	8 2	40	5 0m			175A	DO7
170#	KS082A	5	8 2	40	5 0m	15	10 △	150A	DO7
171#	KS082B	10	8 2	40	5 0m	17	10 △	150A	DO7
172#	LR82CH	5	8 2	40	5 0m	20	5 0	150S	DO7
173	M4Z8 2,A,-20	xx*	8 2	40	15m	6 5		150A	A1kk
174#	M8 2Z	5	8 2	400m	5 0m	700	4 8		A31e
175	MACZA8 2D,10,5	xxx	8 2	40 ∅	250u	200	4 8	175J	M453
176	MACZB8 2D,10,5	xxx	8 2	40 ∅	7 6m	9 0	4 8	175J	M453
177	MACZC8 2D,10,5	xxx	8 2	40 ∅	15m	6 5	4 8	175J	M453
178	MACZD8 2D,10,5	xxx	8 2	40 ∅	250u	200	4 8	175J	M453
179	MACZE8 2D,10,5	xxx	8 2	.40 ∅	15m	6 5	4 8	175J	M453
180	MACZF8 2D,10,5	xxx	8 2	400m∅	250u	200	4 2	175J	M453
181	MACZG8 2D,10,5	xxx	8 2	40 ∅	20m	8 0	6 0	175J	M453
182	MBCZA8 2D,10,5	xxx	8 2	40 ∅	250u	200	4 8	175J	M454
183	MBCZB8 2D,10,5	xxx	8 2	40 ∅	7 6m	9 0	4 8	175J	M454
184	MBCZC8 2D,10,5	xxx	8 2	400m∅	15m	6 5	4 8	175J	M454
185	MBCZD8 2D,10,5	xxx	8 2	40 ∅	250u	200	4 8	175J	M454
186	MBCZE8 2D,10,5	xxx	8 2	40 ∅	15m	6 5	4 8	175J	M454
187	MBCZF8 2D,10,5	xxx	8 2	400m∅	250u	200	4 2	175J	M454
188	MBCZG8 2D,10,5	xxx	8 2	40 ∅	20m	8 0	6 0	175J	M454
189	MCCZA8 2D,10,5	xxx	8 2	40 ∅	250u	200	4 8	175J	M455
190	MCCZB8 2D,10,5	xxx	8 2	40 ∅	7 6m	9 0	4 8	175J	M455
191	MCCZC8 2D,10,5	xxx	8 2	.40 ∅	15m	6 5	4 8	175J	M455

SYMBOLS AND CODES EXPLAINED IN INTERPRETER

2. SILICON REFERENCE DIODES

IN ORDER OF (1) REF. VOLTAGE, (2) DISSIPATION, and (3) TYPE No.

LINE No.	3 TYPE No.	TOLERANCE 1 20 10 5 2 ± (%)	NOM. REF. VOLT. (V)	2 MAX. DISS. @ 25°C (W)	TEST CUR. Izt (A)	MAX. DYN. IMP. (Ω)	TEMP. COEFF Tc	MAX. TEMP (°C)	DWG. No.
1	MCCZD8 2D,10,5	xxx	8 2	40 ∅	250u	200	4 8	175J	M455
2	MCCZE8 2D,10,5	xxx	8.2	40 ∅	15m	6.5	4.8	175J	M455
3	MCCZF8 2D,10,5	xxx	8 2	40 ∅	250u	200	4 2	175J	M455
4	MCCZG8.2D,10,5	xxx	8 2	.40 ∅	20m	8 0	6.0	175J	M455
5	MDCZA8 2D,10,5	xxx	8.2	40 ∅	250u	200	4 8	150A	M410
6	MDCZB8 2D,10,5	xxx	8.2	.40 ∅	7 6m	9 0	4 8	150A	M410
7	MDCZC8.2D,10,5	xxx	8 2	40 ∅	15m	6 5	4 8	150A	M410
8	MDCZD8.2D,10,5	xxx	8.2	.40 ∅	250u	200	4.8	150A	M410
9	MDCZE8.2D,10,5	xxx	8.2	40 ∅	15m	6 5	4 8	150A	M410
10	MDCZF8.2D,10,5	xxx	8 2	.40 ∅	250u	200	4.2	150A	M410
11	MDCZG8 2D,10,5	xxx	8 2	40 ∅	20m	8 0	6.0	150A	M410
12	MZ500-14	10	8.2	4 §	20m	10 ∅	6.2	175J	DO7
13	MZC8 2A10	†	8.2	400m§	6.1m	49	6 2 △	175J	M468
14	MZC8.2B10	§†	8.2	400m§	250u	200		175J	M468
15#	Z5A8.2	1	8 2	400m§	5 0m	15	8 0 △	200J	A1hs
16#	Z5B8.2	5	8 2	400m§	5 0m	15	8.0 △	200J	A1hs
17#	Z5C8.2	10	8 2	400m§	5 0m	15	8.0 △	200J	A1hs
18#	Z5D8 2	15	8 2	400m§	5 0m	15	8.0 △	200J	A1hs
19#	ZF8 2	5	8 2	400m	5 0m	7 0	5.0	150J	DO7
20#	ZG8 2	10	8 2	400m	5 0m	7 0	4.5	150J	DO7
21#	ZP8 2#	5	8 2	400m	5 0m	7 0	5 5	150J	DO7
22	1/2Z8 2T5	5	8 2	50	15m	5 2		175	A94f
23	1N3401∅	10	8.2	50	10m	15	2 0	200A	P5
24	1N3414	10	8.2	50	1 0m	60	2 4	200A	P5
25	1N5237	20†	8 2	.50	20m			200A	DO7
26	1N5237A,B	§∅	8.2	50	20m	5 0	6 2	200A	DO7
27▼	HEPZ0217-RT	10	8.2	500m	20	34			C103
28	IDAZ3401,A,B,C∅	xxxx	8.2	500m	10m	15	2 0	200A	A1hc
29	MTZ612,A	xx	8.2	50	10m	16		175A	A60e
30	MZ92-8.2	†	8 2	500m§	20m		5 9	150J	C103
31	PS8911	5	8 2	50	20m	3.0	6 1	150	A60p
32	S5237,A,B	xxx	8 2	500m	20m	8.0	6 2	175	DO41
33#	Z0D8 2	15	8.2	50	52m	16	6 5	150J	A1ef
34#	ZSF8.2	1	8 2	500m	7 0m	10	1 0	150S	M487a
35#	Z0A8 2	1	8.2	520m	5 0m	6 0	8 0 △	150J	A1ef
36#	Z0B8 2	5	8 2	520m	5 0m	6 0	8 0 △	150J	A1ef
37#	Z0C8.2	10	8 2	520m	5 0m	6 0	8 0 △	150J	A1ef
38	1N4630	5	8.2	.60	15m	700	6.8	200A	DO14
39	LVA82A	5	8 2	600m	1 0m	100			DO14
40	LVA82B	2	8 2	600m	1 0m	100			DO14
41	LVA382A	5	8 2	600m	1 0m	60			DO14
42	LVA382B	2	8 2	600m	1 0m	60			DO14
43#	UZ8 2	10	8 2	60	73m	3 0	6 0	135A	DO3
44#	ZW8 2	5	8 2	600m	5 0m	7 0	5 0	150J	A1bg
45	7JZ8 2	†	8 2	750m	15m	6 5	4 8	175	DO15
46	7Z8.2,A,B,D	xxxx	8 2	750m	15m	6 5	4 8	175	DO27
47	7Z8 2C	∅	8 2	750m	15m	6 5	4 8	175	DO27
48	7ZM8 2,A,B,D	xxxx	8 2	750m	15m	6 5	4 8	175	DO41
49	7ZM8 2C	∅	8 2	750m	15m	6 5	4 8	175	DO41
50	1N1511,A	xx	8.2	75	18m	3 0	6 0	200S	DO12
51	1N3677	20	8 2	750m§	15m	6 5		175S	A1az
52	1N3677A	10	8 2	750m§	15m	6 5		175S	A1az
53	1N3677B	5	8 2	750m§	15m	6 5		175S	A1az
54	MC6112,A	xx	8 2	75	25m	16		175A	A2d
55	MMZ8 2,A,-20	xx*	8 2	75	15m	6 5		150A	A1kk
56	MZ8.2T20,10,5	xxx	8 2	75	18m	4 5	6 0	165A	A152
57	1A8 2M,A,B	xxx	8 2	1 0	31m	4 5		75A	DO15
58	1E8 2Z,10,5	xxx	8 2	1 0	31m	4 5	4 8	150A	A52g
59	1N1425	5	8.2	1 0	20m	5 0 ∅	5 0	200A	A154
60	1N1522,A	xx	8 2	1 0	25m	3 0	6 0	200S	DO3
61	1N1769,A	xx	8 2	1 0	100m	2 4		175S	DO13
62	1N1875	10	8 2	1 0	25m	5 0	4 0	200C	A126
63	1N1875A	5	8 2	1 0	25m	5 0	4.0	200C	A126
64	1N3018	20	8 2	1 0	31m	4 5		175A	A31a
65	1N3018A	10	8.2	1 0	31m	4 5		175A	A31a
66	1N3018B	5	8.2	1 0	31m	4 5		175A	A31a
67	JAN1N3018B	5	8.2	1.0	31m	4 5	6 5	175A	A31c
68	1N4160	20	8 2	1.0	31m	4 5	4 8	175	DO29
69	1N4160A	10	8 2	1 0	31m	4 5	4 8	175	DO29
70	1N4160B	5	8 2	1 0	31m	4 5	4.8	175	DO29
71	1N4325,A,B	xxx	8 2	1 0	31m	4 5	4.8	300S	DO7
72♦	1N4402	20	8.2	1 0	31m	2 0		175S	A266a
73	1N4402A	10	8.2	1.0	31m	2 0	4 8	175A	A1cm
74	1N4402B	5	8 2	1 0	31m	2 0	4 8	175A	A1cm
75	1N4659	5	8 2	1 0	31m	200	6 5	200A	DO15
76	1N4738	10	8 2	1 0	31m	4 5		200A	A1ay
77	1N4738A	5	8 2	1 0	31m	4 5		200A	A1ay
78	1N5561	20	8 2	1 0 §	31m			200A	A196d
79	1N5561A	10	8 2	1.0 §	31m	4 5		200A	A196d
80	1N5561B	5	8 2	1 0 §	31m	4 5		200A	A196d
81	1N5631		8 2	1 0	10m		6 5	175A	DO13
82	1N5631A		8 2	1 0	10m		6 5	175A	DO13
83	1R8.2,A,B	xxx	8 2	1 0	31m	4 5	4 8	175A	A52c
84#	1S3008	xx	8 2	1 0	50m	3 5	5 0	150	A3
85	1Z8 2,A,B	xxx	8 2	1 0	31m	5 0		150	A1ay
86	1Z8.2T20,10,5	xxx	8 2	1 0	25m	4 5	6 0	165A	A89c
87	1ZC8 2T10,5	xx	8 2	1 0	25m	5 0	6.0	165A	A31p
88#	21Z6F,AF	12,6	8 2	1 0	10m	14	7 0	150J	DO13
89#	BZX29C8V2	5	8 2	1 0	20m	4 5	4 8	175J	A1cd
90#	BZX61C8V2	5	8 2	1 0	20m	7 5	4 0	175J	A3y
91♦	BZX85C8V2	5	8 2	1 0	25m	5 0	5.4	150A	DO15
92	CD31-00011	5	8 2	1.0	31m	4 5	5 0	200A	A1ce
93	CD31-12018	5	8.2	1 0	31m	4 5		200A	A1ce
94	CD32-12048	5	8 2	1 0	31m	4 5			
95	CZ8 2,A,B,D	xxxx	8 2	1.0	40m	13	4.8	175	DO15
96	CZ8.2C	∅	8 2	1.0	40m	13	4 8	175	DO15
97	EVR8,A,B	xxx	8 2	1.0	31m	13		175A	DO27
98#	EZ8A	10	8 2	1.0	48m	700	4 0		A1em
99#	FPZ8V2	5	8 2	1.0	31m	400	4 8		A31h
100	G8 2T20,10,5	xxx	8 2	1 0	31m	4.5	6 0	175A	DO15
101#	GZ8.2	5	8 2	1.0	25m	15 △		150A	S115
102	HW8.2,A,B	xxx	8 2	1 0	31m	4 5		175	A196
103	IDA1Z8 2,A,B,C∅	xxxx	8.2	1.0	25m			200A	A1ht
104	JZ8 2,A,B,D	xxxx	8.2	1.0	31m	4.5	4.8	175	DO15
105	JZ8 2C	∅	8 2	1.0	31m	4.5	4 8	175	DO15
106	LPM8 2,A,-20	xx*	8 2	1.0	31m	4 5		150A	A1kk
107	LPZT8.2∅	10	8 2	1 0	25m	5 0	2 0	185	A86
108	PS10018B	5	8 2	1.0	31m	4 5		175A	A60p
109	PS10062	5	8 2	1.0	31m	3 0	6.5	150	A60p
110	SZ8.2	xxxx	8 2	1 0	20m	2 0 ∅	4 9	150A	A3g
111	TZ8 2,A,B,D	xxxx	8 2	1 0	40m	13	4.8	175	DO27
112	TZ8 2C	∅	8 2	1.0	40m	13	4.8	175	DO27
113	UZ8708	5	8 2	1.0	31m	4.5	5.0	175	A146h
114	UZ8808	10	8 2	1.0	31m	4 5	5 0	175	A146h
115	VR8 2,A,B	xxx	8 2	1.0	31m	4.5		125A	A1b
116	Z2A82F	20§∅	8 2	1.0	20m	19	5 5	100J	A141
117#	Z4A8 2	1	8.2	1 0	50m	2.0	8.0 △	150J	A1ef
118#	Z4B8.2	5	8 2	1.0	50m	2 0	8 0 △	150J	A1ef
119#	Z4C8.2	10	8 2	1 0	50m	2 0	8 0 △	150J	A1ef
120#	Z4D8 2	15	8.2	1 0	50m	2.0	8 0 △	150J	A1ef
121	Z8.2,A,B,D	xxxx	8 2	1 0	31m	4.5	4 8	175	DO27
122	Z8.2C	∅	8 2	1 0	31m	4 5	4 8	175	DO27
123	ZA8.2,A,B	xxx	8 2	1 0	31m	4 5		150C	A1ew
124	ZB8.2#	†	8 2	1 0 §	31m	4 5		150A	A1bc
125	ZD8.2∅,A,B	xxx	8 2	1 0	31m	4 5	4 8	175A	A1cm
126#	ZEC8.2	20	8.2	1 0	25m	5 0	06	165A	DO3
127#	ZF8A	10	8 2	1 0	48m	5 5	4.0	150A	DO13
128	ZH8.2,A,B	xxx	8.2	1 0	31m	4 5	4 8	175A	DO1
129	ZM8 2,A,B,D	xxxx	8.2	1.0	31m	4 5	4.8	175	DO41
130	ZM8.2C	∅	8 2	1 0	31m	4.5	4.8	175	DO41
131#	7718	5	8.2	1.1	100m	2 0	4.5	125A	A1bu
132#	BZY92C8V2	5	8 2	1 1	100m	2 0	4 0	150	DO13
133#	ZD8 2#	5	8 2	1 3	100	2 0	5 0	150J	DO13
134	ZM8.2∅	10	8 2	1.3	100	2.0	5.0	150J	DO13
135#	ZU8 2	10	8.2	1 3	100	2 0	5 0	150J	A1bg
136#	ZY8.2	5	8 2	1.3	100	2 0	5 0	150J	A1bg
137▼	1N3787	20	8 2	1 5	46m	3 5	6.5	175S	C14∅
138▼	1N3787A	10	8 2	1.5	46m	3 5	6 5	175S	C14∅
139▼	1N3787B	5	8 2	1 5	46m	3 5	6.5	175S	C14∅
140	1N4463	5	8 2	1 5	31m	3.0		175A	A196
141	JAN1N4463	10	8.2	1 5	31m	3 0	6.5	175A	A1v
142#	1S4008,A	xx	8 2	1 5	50m	1 5	5 0	150A	DO1
143	1 5DKZ8 2,A,B	xxx	8 2	1 5	46m	3 5		175A	DO27
144	1.5JZ8 2,A,B,D	xxxx	8 2	1 5	46m	3 5	6 5	175	DO15
145	1 5JZ8 2C	∅	8 2	1 5	46m	3 5	6.5	175	DO15
146	1 5R8 2,A,B	xxx	8.2	1 5	46m	3 0	4.8	175A	A52c
147	1 5Z8 2,A,B,D	xxxx	8 2	1 5	46m	3.5	6 5	175	DO27
148	1 5Z8 2C	∅	8 2	1 5	46m	3 5	6.5	175	DO27
149#	BZY96C8V2	5	8 2	1 5	50m	3 5	5 0	175J	DO1
150	MC6312,A	xx	8.2	1.5	100m	15			A1q
151	MZ1000-11	10	8 2	1 5 §	31m	6 8 ∅	6 2	175J	A1ay
152#	SZ82A	5	8 2	1 5	20m	20	5 0	160A	A26
153#	Z2A8 2	1	8 2	1 5	100m	2 0	8 0 △	150J	A244
154#	Z2B8.2	5	8 2	1 5	100m	2 0	8.0 △	150J	A244
155#	Z2C8 2	10	8 2	1 5	100m	2 0	8 0 △	150J	A244
156#	Z2D8 2	∅∅§§	8.2	1 5		4.0		150J	A6c
157#	Z3A8 2	1	8 2	1 5	100m	2 0	8 0 △	150J	S4f
158#	Z3B8 2	5	8 2	1 5	100m	2 0	8 0 △	150J	S4f
159#	Z3B82CF	20§∅	8 2	1 5	20m	4 0	6.0	175J	DO1
160#	Z3C8.2	10	8 2	1 5	100m	2 0	8 0 △	150J	S4f
161#	Z3D8 2	∅∅§§	8 2	1 5	50m	4 0		150J	S4f
162#	61Z6,A	12,6	8 2	1 8	100m	10	70	150J	DO4
163	2VR8 2,A,B	xxx	8 2	2 0	61m	3 5			A3e
164#	BZZ18	10	8 2	2 0	20m	10		150J	DO4
165	LMZ8.2,A,-20	xx*	8.2	2 0	61m	2 3		150A	A1kk
166	ZBC8.2	†	8 2	2 0 §	62m	3 0		150A	A1bc
167	1N5018	10	8 2	2 5	76m	2 1	4 8	150	A1gn
168	1N5018A	5	8 2	2 5	76m	2 1	4.8	150	A1gn
169#	BZX70C8V2	5	8 2	2 5	50m	3 5	40	150J	A171b
170	1N5065	5	8 2	3 0	75m	3.0		175A	A146j
171	3R8 2,A,B	xxx	8 2	3 0	93m	3 0	4.8	175A	A1rw
172	3TZ8.2,A,B,D	xxxx	8 2	3 0	100m	3 0	6 0	175	A1ec
173	3TZ8.2C	∅	8 2	3 0	100m	3 0	6 0	175	A1ec
174	3VR8 2,A,B	xxx	8.2	3 0	93m	3.0			A222
175	CZ5065	10	8.2	3.0	75m	3 0	40	175A	A196e
176	M3Z8.2,A	xx	8 2	3.0	91m	3 6		150A	A1kk
177	MZ708	5	8 2	3 0	75m	3 0	5 0	175A	A146j
178	MZ808	10	8 2	3 0	75m	3 0	5 0	175A	A146j
179	MZ908	20	8 2	3.0	75m	3 0	5 0	175A	A146j
180	UZ708	5	8.2	3 0	75m	3.0	5 0	175A	A60
181	UZ808	10	8 2	3 0	75m	3 0	5 0	175A	A146f
182	UZ908	20	8.2	3 0	75m	3.0	5 0	175A	A60
183	ZAC8 2,A,B	xxx	8 2	3 0	31m	4 5		150C	A1ey
184	ZCC8.2	†	8 2	3 0 §	75m	3 0		150A	A1ey
185	1N1592,A	xx	8 2	3 5	80m	1 5	6 0	200S	DO4
186	3Z8 2T20,10,5	xxx	8.2	3 5	80m	2 3	6 0	165	DO4

SYMBOLS AND CODES EXPLAINED IN INTERPRETER

2. SILICON REFERENCE DIODES

IN ORDER OF (1) REF. VOLTAGE, (2) DISSIPATION, and (3) TYPE No.

LINE No.	3 TYPE No.	TOLERANCE 1 20 10 5 2 ± (%)	NOM REF. VOLT. (V)	2 MAX. DISS. @ 25°C (W)	TEST CUR Izt (A)	MAX. DYN IMP. (Ω)	TEMP. COEFF Tc	MAX. TEMP (°C)	DWG. No
1	1N4016,A,B	xxx	8.2	5.0	150m	1 5	6 5	180A	S82
2	1N4956	5	8 2	5 0	150m	1 5		175A	A146m
3	JAN1N4956	5	8 2	5.0	150m	1.5	6.0	175A	A248f
4♦	1N5344	20	8 2	5 0	150m			200A	A1ee
5▼	1N5344A	10	8 2	5.0	150m	1 5		200A	A1ee
6▼	1N5344B	5	8 2	5 0	150m	1.5		200A	A1ee
7▼	5ZS8.2,A,B	xxx	8 2	5 0 §	150m	1 5		200A	A1ts
8#	1308	10Ø	8.2	5 0	100m	2 0	5 0	150J	A9h
9▼	CTZC8 2,A,B,DØ								
		xxxx	8 2	5 0 §	150m	1 5 Ø	4 8	175A	A1ey
10▼	CTZC8.2CØ	1	8 2	5 0 §	150m	1 5 Ø	4 8	175A	A1ey
11▼	CTZC8 2EØ	3	8 2	5 0 §	150m	1 5 Ø	4 8	175A	A1ey
12	DSZ5708	5	8 2	5 0	150m	2 0	6 0	175A	A60r
13	DSZ5808	10	8 2	5 0	150m	2 0	6 0	175A	A60r
14	MZ5708	5	8.2	5 0	150m	1.5	5 0		A60f
15	MZ5808	10	8 2	5 0	150m	1 5	5 0		A60f
16	MZ5908	20	8 2	5 0	150m	1 5	5 0		A60f
17▼	TZC8 2,A,B,D								
		xxxx	8 2	5 0 §	150m	1 5 Ø	4 8	175A	A1ey
18▼	TZC8 2C	1	8 2	5 0 §	150m	1 5 Ø	4 8	175A	A1ey
19▼	TZC8 2E	3	8 2	5 0 §	150m	1.5 Ø	4 8	175A	A1ey
20▼	UZ5708	5	8 2	5 0	150m	1 5	6 0	175A	A146m
21♦	UZ5808	10	8 2	5 0	150m	1 5	6 0	175A	A146m
22	UZ5908	20	8 2	5 0	150m	1 5 Ø	5 0	175A	A146m
23	ZC8 2	†	8 2	5.0 §	150m	1 5		150A	A1ey
24	UZ4708	5	8 2	8 0	150m	1 5		175A	A146m
25	UZ4808	10	8.2	8 0	150m	1 5		175A	A146m
26	1N1416	5	8 2	10	200m	3.0 Ø	5 0	175C	S154
27	1N1603,A	xx	8 2	10	250m	60	6 0	200S	DO4
28	1N1807,A	xx	8.2	10	1	1 0		175A	DO4
29	1N1807B	20	8 2	10	1	1 0			S11e
30	1N1807C,CAØ								
		xx	8 2	10 §	1.0	1.0		175J	S19a
31	1N1891	10	8 2	10	25m	5 0	4 0	200A	S82
32	1N1891A	5	8 2	10	25m	5 0	4 0	200A	S82
33	1N2972,A,B	xxx	8 2	10	305m	1 5		175C	DO4⊘
34	JAN1N2972B,RB								
		5	8 2	10	305m	1.5	6 5	150C	DO4
35	1N4260	20	8 2	10	305m	1.5	4 8	175C	S134
36	1N4260A	10	8.2	10	305m	1.5	4 8	175C	S134
37	1N4260B	5	8 2	10	305m	1.5	4 8	175C	S134
38	JAN1N4260B	5	8.2	10 §	305m	1.5	6 5	175S	S134a
39#	1S6008	10	8 2	10	200m	2.5	4 0	150	DO4
40#	1S6008A	5	8 2	10	200m	2.5	4 0	150	DO4
41	10PZ8 2,A,B,D								
		xxxx	8.2	10	305m	1 5	4 8	175	DO4
42	10PZ8 2C	⊘	8 2	10	305m	1.5	4 8	175	DO4
43	10RZ8 2,A,B,D								
		xxxx	8 2	10	600m	3 5	4 8	155	DO4
44	10RZ8 2C	⊘	8 2	10	600m	3.5	4 8	155	DO4
45	10Z8 2T20,10,5								
		xxx	8 2	10	250m	90	6 0	165	DO4
46#	GZ8A	10	8 2	10 ⊘	280m	1.2	4 0	150A	DO4
47#	OAZ226	5	8.2	10	20m	10		150J	DO4
48#	PZ8A	10	8 2	10 ⊘	280m	1.2	4 0	150A	S95a
49	PZT8 2Ø	10	8 2	10 ⊘	25m	5 0	2.0	185	S82
50	UZ7708	5	8 2	10	300m	.80	5.0	175	S277⊘
51	UZ7808	10	8 2	10	300m	80	5 0	175	S277⊘
52	UZ7908	20	8 2	10	300m	80	5.0	175	S277⊘
53#	Z5D82CF	20§Ø	8.2	10	50m	2.5	5.0	150J	DO4
54#	ZC5008	5	8 2	10	200m	2.5	3.7	150A	S19
55#	ZD5008	10	8 2	10	200m	2.5	3 7	150A	S19
56#	1208	10Ø	8.2	15	500m	500m	5 0	150J	S87
57#	BZY93C8V2	5	8 2	20 §	2	.30	4 0	175J	DO4⊘
58#	RZ8A	xx	8 2	20 ⊘	430m	1.2	4 0	150A	DO5
59	75TE8 2,A	xx	8 2	25	1 2	15m	4 0	125C	TO36
60#	81Z6,A	12,6	8 2	25	400m	2.0	6 0	150J	S179
61#	ZL8 2	10	8 2	25 ⊘	100	2.0	5 0	150J	M41
62#	ZX8 2	5	8 2	25 ⊘	100	2 0	5 0	150J	M41
63	1N2806,A,B	xxx	8 2	50	1 5	40	4 8	175S	C5a
64	JAN1N2806B,RB								
		5	8 2	50	1 5	40	6 5	150C	C5a
65	1N3307	20	8.2	50	1 5	400m	4 8	175J	DO5
66	1N3307A	10	8 2	50	1 5	400m	4 8	175J	DO5
67	1N3307B	5	8 2	50	1 5	400m	4 8	175J	DO5
68	JAN1N3307B,RB								
		5	8 2	50	1 5	40	6 5	150	DO5
69	50T8 2,A,B	xx*	8.2	50	1 5	400m	4 8		S19e
70#	BZY91C8V2	5	8 2	75 §	5	30	10	175J	DO5⊘
71	80TF8.2,A	xx	8 2	80	1 2	15m	4 0	125C	M117c
72#	ZC708△	5	8.2	100 §	100	2 0	4 8	175J	S125d⊘
73	250ZE8 2	10	8 2	250 §	20		8 0	190A	S83
74	250ZF8.2	10	8 2	250 §	20		8 0	190A	M56a
75	LID8 2,A	xx	8 2	400	15m	6 8		150A	M401
76#	RD8H	10	8.25	10	5.0m	55	4 5	150A	C12b
77▼	BLVA183	2 3	8 3	250m	250u	500	2 7	150A	A9n
78▼	BLVA483	2 3	8 3	250m	250u	350	2 7	150A	A9n
79	1N1958,A,B	xx1	8 3	.40	5 0m	15	6 0	150	DO7
80▼	LVA183	2 3	8 3	400m	250u	350	6 2	150A	DO14
81▼	LVA483	2 3	8 3	400m	250u	175	6 2	150A	DO14
82	1N1875B	1	8 3	1 0	25m	1 0 △	4 0	175A	DO13
83	FA8001	5	8 4		10m	20	05	100	A1gb
84	FA8002	5	8 4		10m	20	10	100	A1gb
85	FA8003	5	8.4		10m	20	20	100	A1gb
86	FA8004	5	8 4		10m	20	50	100	A1gb
87	MZ805	5	8 4		10m	15		100A	DO7
88	MZ810△	5	8 4		10m	15		100A	DO7
89	MZ820△	5	8 4		10m	15		100A	DO7
90	MZ840△	5	8 4		10m	15		100A	DO7
91	PS1200	5	8 4		10m	15	40	100	A1gb
92	PS1200A	5	8 4		10m	15	20	100	A1gb
93	PS1200B	5	8 4		10m	15	.10	100	A1gb
94	PS1201	5	8 4		10m	15	40	100	A1gb
95	PS1201A	5	8 4		10m	15	20	100	A1gb
96	PS1201B	5	8.4		10m	15	10	100	A1gb
97	PS1202	5	8 4		10m	15	40	100	A1gb
98	PS1202A	5	8 4		10m	15	20	100	A1gb
99	PS1202B	5	8.4		10m	15	10	100	A1gb
100	PS1203	5	8 4		10m	15	40	100	A1gb
101	PS1203A	5	8 4		10m	15	.20	100	A1gb

LINE No.	3 TYPE No.	TOLERANCE 1 20 10 5 2 ± (%)	NOM REF. VOLT. (V)	2 MAX. DISS. @ 25°C (W)	TEST CUR Izt (A)	MAX. DYN IMP. (Ω)	TEMP. COEFF Tc	MAX. TEMP (°C)	DWG. No.
102	PS1203B	5	8.4		10m	15	.10	100	A1gb
103	PS1204	5	8 4		10m	15	40	100	A1gb
104	PS1204A	5	8 4		10m	15	20	100	A1gb
105	PS1204B	5	8 4		10m	15	10	100	A1gb
106	PS1205	5	8 4		10m	15	40	100	A1gb
107	PS1205A	5	8 4		10m	15	.20	100	A1gb
108	PS1205B	5	8 4		10m	15	10	100	A1gb
109	PS1207	5	8 4		10m	15	40	100	A1gc
110	PS1207A	5	8 4		10m	15	20	100	A1gc
111	PS1207B	5	8 4		10m	15	10	100	A1gc
112	SV3173	5	8 4		10m	15	50	125A	A1ha
113	SV3174	5	8.4		10m	15	30	125A	A1ha
114	SV3175	5	8 4		10m	15	20	125A	A1ha
115	SV3176	5	8 4		10m	15	.10	125A	A1ha
116#	ZS9	5	8 4		5 0m	40	500m	150A	C3c
117#	BZY22	5	8 4	06	5 0m	25	1 0	100A	C3g
118#	BZY23	5	8 4	06	5 0m	25	50	100A	C3g
119#	BZY24	5	8 4	06	5 0m	25	20	100A	C3g
120#	BZY25	5	8 4	06	5 0m	25	10	100A	C3g
121	1N430	5	8 4	25	10m	15	20	100A	S20
122	1N430A	5	8 4	25	10m	15	10	100A	S20
123	JAN1N430A	5	8 4	25	10m	15	20	100A	S20a
124	1N430B	5	8 4	25	10m	15	.10	150A	S20
125	JAN1N430B	1	8.4	25	10m	15	20	100A	S20a
126	1N1530	5	8 4	25	10m	15	20	150	C7
127	1N1530A	5	8 4	25	10m	15	.10	150	C7
128	JAN1N1530A	5	8.4	25	10m	15	10	150	C7
129♦#	BZX51	5	8 4	250m§	10m	9.0 Ø	1 0	150J	DO7
130♦#	BZX52	5	8 4	250m§	10m	9 0 Ø	500m	150J	DO7
131♦#	BZX53	5	8 4	250m§	10m	9.0 Ø	200m	150J	DO7
132♦#	BZX54	5	8 4	250m§	10m	9 0 Ø	100m	150J	DO7
133	CD4111	5	8 4	25	10m	15	05	125A	A1cj
134	CD4112	5	8 4	.25	10m	15	.10	125A	A1cj
135	CD4113	5	8.4	25	10m	15	20	125A	A1cj
136	CD4114	5	8 4	25	10m	15	50	125A	A1cj
137	CD4115	5	8.4	25	10m	15	1 0	125A	A1cj
138	PS1501	5	8 4	25	10m	15	20	150A	A1gc
139	PS1501A	5	8.4	25	10m	15	10	150A	A1gc
140	SVM81	5	8 4	25	7 5m	75	1.0	100R	DO7
141	SVM805	5	8 4	25	7 5m	75	50	100R	DO7
142	SVM8010	5	8 4	25	7 5m	50	10	100R	DO7
143	SVM8011	5	8 4	.25	7 5m	20	.10	100R	DO7
144	SVM8020	5	8 4	25	7 5m	50	20	100R	DO7
145	SVM8021	5	8 4	25	7 5m	20	20	100R	DO7
146	1N3199	5	8.4	.27	10m	15	50	150S	A1ha
147	1N3200	5	8.4	27	10m	15	30	150S	A1ha
148	1N3201	5	8 4	27	10m	15	20	150S	A1ha
149	1N3202	5	8.4	.27	10m	15	10	150S	A1ha
150	1N3154	5	8.4	40	10m	15	1 0	175	DO7
151	1N3154A	5	8 4	40	10m	15	1.0	175	DO7
152	1N3155	5	8.4	40	10m	15	50	175	DO7
153	1N3155A	5	8 4	40	10m	15	50	175	DO7
154	1N3156	5	8 4	40	10m	15	20	175	DO7
155	1N3156A	5	8.4	40	10m	15	20	175	DO7
156	1N3157	5	8.4	40	10m	15	10	175	DO7
157	1N3157A	5	8 4	40	10m	15	10	175	DO7
158	SV9785	5	8.4	40	10m	15	05	100	DO7
159	SV9786	5	8.4	40	10m	15	05	150	DO7
160	JAN1N3154	5	8 4	50	10m	15		175A	A1dd
161	JAN1N3155	5	8 4	.50	10m	15		175A	A1dd
162	JAN1N3156	5	8 4	50	10m	15		175A	A1dd
163	JAN1N3157	5	8.4	.50	10m	15		175A	A1dd
164	1N2044B	5	8.5		1	80		150A	S19a
165	1N4775B		8.5		500u	200	1 0	150	DO7
166	1N4776B		8 5		500u	200	50	150	DO7
167	1N4777B		8.5		500u	200	20	150	DO7
168	1N4778B		8 5		500u	200	10	150	DO7
169	1N4779B		8 5		500u	200	05	150	DO7
170	1N4780B		8 5		1 0m	100	1 0	150	DO7
171	1N4781B		8.5		1 0m	100	.50	150	DO7
172	1N4782B		8 5		1 0m	100	20	150	DO7
173	1N4783B		8 5		1 0m	100	.10	150	DO7
174	1N4784B		8.5		1 0m	100	.05	150	DO7
175	1N764-2	5	8 5	25	10m	12	5 0	150	DO7
176	1N4775	5	8 5	25	.50m	200	1 0	175A	DO7
177	1N4775A	5	8 5	.25	50m	200	1 0	175A	DO7
178	1N4776	5	8.5	25	.50m	200	50	175A	DO7
179	1N4776A	5	8.5	25	50m	200	.50	175A	DO7
180	1N4777	5	8 5	25	.50m	200	20	175A	DO7
181	1N4777A	5	8.5	25	50m	200	20	175A	DO7
182	1N4778	5	8 5	25	50m	200	.10	175A	DO7
183	1N4778A	5	8 5	25	50m	200	10	175A	DO7
184	1N4779	5	8 5	25	50m	200	.05	175A	DO7
185	1N4779A	5	8 5	25	.50m	200	05	175A	DO7
186	1N4780	5	8 5	25	1 0m	100	1 0	175A	DO7
187	1N4780A	5	8 5	25	1 0m	100	1 0	175A	DO7
188	1N4781	5	8 5	25	1.0m	100	50	175A	DO7
189	1N4781A	5	8.5	25	1 0m	100	50	175A	DO7
190	1N4782	5	8 5	25	1 0m	100	20	175A	DO7
191	1N4782A	5	8 5	25	1 0m	100	.20	175A	DO7
192	1N4783	5	8 5	25	1.0m	100	10	175A	DO7
193	1N4783A	5	8.5	25	1 0m	100	10	175A	DO7
194	1N4784	5	8.5	25	1.0m	100	05	175A	DO7
195	1N4784A	5	8 5	25	1 0m	100	05	175A	DO7
196#	1S2067	6	8.5	250m	10m	20	1 0 △	150J	A1ce
197#	1S2068△	6	8.5	25	10m	20	500m△	150J	A1ce
198#	1S2069	6	8.5	250m	10m	20	200m△	150J	A1ce
199	SV129	5	8 5	25	10m	15 Ø	5.4	150	DO7
200#	1S212	5	8 5	300m	10m	20	1 0	150J	A106d
201#	1S213	5	8 5	300m	10m	20	50	150J	A106d
202#	1S214	5	8.5	300m	10m	20	20	150J	A106d
203	1N3148	5	8 5	.40	10m	15	50	150A	A31b
204	WZ529	5	8 5	40	10m	10		150A	A31e
205	1N2035-2	5	8.5	75	10m	15	6 0	150J	DO12
206	SV1012	5	8.5	75	10m	15 Ø	5 4	150	A82f
207	WZ912	5	8 5	75	10m	15 Ø		150A	A1ep
208	1N2790	5	8 5	1 0	10m	15	.20	150A	A154
209#	1S224	10	8.5	1 0	35m	4 0		150J	A56a
210▼#	BZ085	5	8.5	1 0	30m	6 0	5 3	175J	A60t
211	VR8.5,A,B	xx*	8.5	1 0	25m	6 0	4 0	125C	A1ex

SYMBOLS AND CODES EXPLAINED IN INTERPRETER

2. SILICON REFERENCE DIODES

IN ORDER OF (1) REF. VOLTAGE, (2) DISSIPATION, and (3) TYPE No.

LINE No	TYPE No.	TOLERANCE 3 (20 10 5 2) ± (%)	NOM. REF. VOLT. (V)	2 MAX. DISS. @ 25°C (W)	TEST CUR. Izt (A)	MAX. DYN. IMP (Ω)	TEMP. COEFF Tc	MAX. TEMP (°C)	DWG. No.
1	2VR8 5,A,B	xx*	8 5	2.0	250u	6 0	4 0	125C	A3e
2	3VR8 5,A,B	xx*	8.5	3 0	250m	1 5			A222
3	1N2044-2	5	8 5	10	1	80	6 0	150J	DO4
4#	1S266	10	8 5	10	350m	1 5		150J	S19g
5#	3034	1 8	8 55	2 0	10m	14	1 △	150J	C26
6#	3035	1 8	8 55	2 0	10m	12	1 △	150J	C26
7#	3235∅	1 8	8 55	2 0	10m	14	2 △	150J	C26
8#	3535	1 8	8.55	2 0	10m	14	5 △	150J	C26
9#	KVR8.6	5	8 6	20	10m	30	58	150A	A1hh
10#	KVR8 6A	5	8 6	20	10m	30	12	150A	A1hh
11▼	BLVA186	2 2	8 6	250m	250u	500	3 0	150A	A9n
12▼	BLVA486	2 2	8 6	250m	250u	350	3 0	150A	A9n
13▼	LVA186	2 2	8 6	400m	250u	350	6 4	150A	DO14
14▼	LVA486	2 2	8 6	400m	250u	175	6 4	150A	DO14
15	1N4102	5	8 7	25	25m	200		200J	DO7
16	1N4695	5	8 7	25	05m			200A	DO14
17	CD3125	5	8 7	25	10m	15 ∅	6 2	150A	A1sj
18	MC6416A	xxx	8 7	25	7.5m	15	1 0	75R	M277c
19	MC6416B	xxx	8 7	25	7.5m	15	1 1	75R	A188
20	MC6417A	xxx	8 7	25	7 5m	15	1.0	100R	M277c
21	MC6417B	xxx	8 7	25	7 5m	15	1 0	100R	A188
22	MC6418A	xxx	8 7	25	7 5m	15	50	75R	M277c
23	MC6418B	xxx	8 7	25	7 5m	15	50	75R	A188
24	MC6419A	xxx	8 7	25	7 5m	15	50	100R	M277c
25	MC6419B	xxx	8 7	25	7 5m	15	50	100R	A188
26	MC6420A	xxx	8 7	25	7 5m	15	20	75R	M277c
27	MC6420B	xxx	8 7	25	7 5m	15	20	75R	A188
28	MC6421A	xxx	8 7	25	7.5m	15	20	100R	M277c
29	MC6421B	xxx	8 7	25	7 5m	15	20	100R	A188
30	MC6422A	xxx	8 7	25	7 5m	15	10	75R	M277c
31	MC6422B	xxx	8 7	25	7.5m	15	10	75R	A188
32	MC6423A	xxx	8 7	25	7 5m	15	10	100R	M277c
33	MC6423B	xxx	8 7	25	7 5m	15	10	100R	A188
34	MC6428A	xxx	8 7	25	7 5m	15	.05	75R	M277c
35	MC6428B	xxx	8 7	25	7 5m	15	.10	75R	A188
36	MC6429A	xxx	8 7	.25	7 5m	15	05	100R	M277c
37	MC6429B	xxx	8 7	.25	7 5m	15	10	100R	A188
38	JAN1N4102	5	8 7	400m	250u	200	7 5	175A	A1sx
39	MC6416C	xxx	8 7	400m	7 5m	15	1 0	75R	A1as
40	MC6417C	xxx	8 7	400m	7 5m	15	1.0	100R	A1as
41	MC6418C	xxx	8 7	400m	7 5m	15	500m	75R	A1as
42	MC6419C	xxx	8 7	400m	7 5m	15	500m	100R	A1as
43	MC6420C	xxx	8 7	400m	7 5m	15	200m	75R	A1as
44	MC6421C	xxx	8 7	400m	7 5m	15	200m	100R	A1as
45	MC6422C	xxx	8 7	400m	7 5m	15	100m	75R	A1as
46	MC6423C	xxx	8 7	400m	7 5m	15	100m	100R	A1as
47	MC6428C	xxx	8 7	400m	7 5m	15	50m	75R	A1as
48	MC6429C	xxx	8 7	400m	7 5m	15	50m	100R	A1as
49	MZC8 7A10	†	8 7	400m§	5 7m	52	6 5 △	175J	M468
50	MZC8 7B10	§†	8 7	400m§	250u	200		175J	M468
51	1N5238	20†	8 7	50	20m			200A	DO7
52	1N5238A,B	§∅	8 7	50	20m	6 0	6.5	200A	DO7
53	MZ92-8 7	†	8 7	500m§	20m		6 1	150J	C103
54	S5238,A,B	xxx	8 7	500m	20m	8 0	6 5	175	DO41
55♦	1N5345	20	8 7	5 0	150m			200A	A1ee
56▼	1N5345A	10	8 7	5.0	150m	2 0		200A	A1ee
57▼	1N5345B	5	8 7	5 0	150m	2 0		200A	A1ee
58▼	5ZS8 7,A,B	xxx	8 7	5 0 §	150m	2 0		200A	A1ts
59	1N225∅	10	8 75	150m	200u			150A	C1
60	1N225A∅	5	8 75	150m	200u			150A	C1
61	1N1313,A	xx	8 75	15	20m		4 0	150A	C1
62	IDAZ225,A,B,C∅	xxxx	8 75	150m	200u			150A	A1hc
63#	RD9A	10	8 75	20	10m	10	6 0	150S	A1dw
64#	1S758	xxx	8 75	25	10m	15	5 0	150	C1d
65#	RD9B	10	8 75	1.0	40m	5 0	6 0	150S	A164
66#	RD9C	10	8 75	3 0	120m	3 0	6 0	150S	S42
67#	RD9D	10	8 75	10	400m	1 8	5.5	150S	S103
68	1N764	xx	8 8	250m	10m	12	5 0	150	DO7
69	1N764A	xx	8 8	250m	10m	12	5 0	150	DO7
70	1N2035	5	8 8	75	10m	15	6 0	150J	DO12
71	1N2044	5	8.8	10	1	.80	6 0	150J	DO4
72	1N4297	5	8 8	10	200m	1 4	1 0	75B	DO4
73	1N4297A	5	8 8	10	200m	1 4	1 0	100B	DO4
74	1N4297B	5	8.8	10	200m	1 4	1 0	150B	DO4
75	1N4298	5	8 8	10	200m	1 4	50	75B	DO4
76	1N4298A	5	8 8	10	200m	1 4	50	100B	DO4
77	1N4298B	5	8 8	10	200m	1 4	50	150B	DO4
78	1N4301	5	8 8	50	1	60	1.0	75B	DO5
79	1N4301A	5	8 8	50	1	60	1 0	100B	DO5
80	1N4301B	5	8 8	50	1	60	1 0	150B	DO5
81	1N4302	5	8 8	50	1	60	50	75B	DO5
82	1N4302A	5	8 8	50	1	60	50	100B	DO5
83	1N4302B	5	8.8	50	1	60	50	150B	DO5
84▼	BLVA189	2 1	8 9	250m	250u	500	3 3	150A	A9n
85▼	BLVA489	2 1	8.9	250m	250u	350	3.3	150A	A9n
86▼	LVA189	2 1	8 9	400m	250u	350	6 5	150A	DO14
87▼	LVA489	2 1	8 9	400m	250u	175	6.5	150A	DO14
88	1N2044C	5	9 0		1	.80		150A	S19a
89	3N39†	9	9 0		5 0m		50	71A	M51
90	3N42†	9	9 0		5 0m		50	100A	M51
91	3N43†	9	9 0		5 0m		30	100A	M51
92	3N44†	9	9 0		5 0m		20	100A	M51
93	3N44A†	10	9.0				10	150S	M51
94#	BZX72	5	9 0	56m§	5 0m	50	6 7m	125A	DO7
95#	BZX72A	5	9 0	56m§	5 0m	50	14m	100A	DO7
96#	BZX72B	5	9 0	56m§	5 0m	50	14m	125A	DO7
97#	BZX72C	5	9 0	56m§	5 0m	50	28m	100A	DO7
98#	KS77	5	9 0	57m	5 0m	35		125A	DO7
99#	KS77B	5	9 0	57m	5 0m	35		100A	DO7
100#	KS78	5	9 0	57m	5.0m	35		125A	DO7
101#	KS78B	5	9 0	57m	5 0m	35		100A	DO7
102	654C9	5	9 0	.15	5 0m	12	5 2	150A	C3
103#	SZ200-9	15	9 0	20	5 0m	10	6 0	100A	A138
104	1N764-3	5	9 0	25	10m	12	5 0	150	DO7
105#	1S334	7 0	9 0	25	10m	20	7 0	150J	A1ce
106#	1S472	10	9.0	25	15m	15	5 5	150J	DO7
107	HR9 0	5	9 0	25	5 0m	20		175A	DO7
108#	MZ1009	7	9 0	250m	10m	15	6.0	175J	DO7
109	SV131	5	9 0	25	10m	15	5 7	150	DO7
110	SVM91	5	9 0	.25	7.5m	75	1.0	100R	DO7
111	SVM905	5	9.0	25	7.5m	75	.50	100R	DO7
112	SVM9010	5	9.0	25	7 5m	50	.10	100R	DO7
113	SVM9011	5	9 0	.25	7.5m	20	.10	100R	DO7
114	SVM9020	5	9.0	25	7.5m	50	.20	100R	DO7
115	SVM9021	5	9.0	.25	7.5m	20	.20	100R	DO7
116#	SZ9	7	9.0	.25	5.0m	20	.75	150J	C1f
117#	1S194	7 0	9 0	40	20m	8.0	6.0	150J	A1ce
118	GREA4	5	9.0	40	4.0m	40	.05	75	DO7
119	GREA7	5	9 0	.40	4.0m	40	.10	75	DO7
120	GREA7A	5	9 0	.40	4.0m	40	05	100	DO7
121	GREA10B	5	9 0	.40	4.0m	40	.05	150	DO7
122	GREA14	5	9 0	40	4.0m	40	20	75	DO7
123	GREA14A	5	9 0	.40	4.0m	40	.10	100	DO7
124	GREA19B	5	9.0	.40	4.0m	40	.10	150	DO7
125	GREA29A	5	9.0	40	4.0m	40	.20	100	DO7
126	GREA35	5	9.0	40	4.0m	40	50	75	DO7
127	GREA38B	5	9 0	.40	4.0m	40	20	150	DO7
128	GREA70	5	9 0	40	4.0m	40	1.0	75	DO7
129	GREA72A	5	9.0	40	4.0m	40	.50	100	DO7
130	GREA95B	5	9 0	.40	4.0m	40	.50	150	DO7
131	GREA145A	5	9.0	40	4 0m	40	1.0	100	DO7
132	GREA190B	5	9 0	.40	4 0m	40	1.0	150	DO7
133	ME1Z935	5	9.0	400m	7.5m	20	1.0	75J	M489
134	ME1Z935A	5	9 0	400m	7.5m	20	1.0	100J	M489
135	ME1Z935B	5	9 0	400m	7 5m	20	1.0	150J	M489
136	ME1Z936	5	9 0	400m	7 5m	20	500m	75J	M489
137	ME1Z936A	5	9.0	400m	7.5m	20	500m	100J	M489
138	ME1Z936B	5	9.0	400m	7.5m	20	500m	150J	M489
139	ME1Z937	5	9.0	400m	7.5m	20	200m	75J	M489
140	ME1Z937A	5	9 0	400m	7.5m	20	200m	100J	M489
141	ME1Z937B	5	9 0	400m	7.5m	20	200m	150J	M489
142	ME1Z938	5	9 0	400m	7.5m	20	100m	75J	M489
143	ME1Z938A	5	9 0	400m	7.5m	20	100m	100J	M489
144	ME1Z938B	5	9.0	400m	7 5m	20	100m	150J	M489
145	ME1Z939	5	9 0	400m	7.5m	20	50m	75J	M489
146	ME1Z939A	5	9.0	400m	7.5m	20	50m	100J	M489
147	ME1Z939B	5	9.0	400m	7 5m	20	50m	150J	M489
148	ME1Z940	5	9.0	400m	7.5m	20	20m	75J	M489
149	ME1Z940A	5	9 0	400m	7.5m	20	20m	100J	M489
150	ME1Z940B	5	9 0	400m	7.5m	20	20m	150J	M489
151	WZ531	5	9 0	.40	10m	10		150A	A31e
152	1N935	5	9 0	.50	7.5m	20	1 0	75R	DO7
153	1N935A	5	9 0	50	7 5m	20	1 0	100R	DO7
154	1N935B	5	9.0	.50	7.5m	20	1.0	150R	DO7
155	JAN1N935B	5	9 0	50	7 5m	20	2 △	175A	DO7
156	1N936	5	9 0	.50	7 5m	20	50	75R	DO7
157	1N936A	5	9 0	.50	7 5m	20	.50	100R	DO7
158	1N936B	5	9 0	.50	7 5m	20	50	150R	DO7
159	1N937	5	9.0	.50	7 5m	20	20	75R	DO7
160	1N937A	5	9 0	.50	7.5m	20	.20	100R	DO7
161	1N937B	5	9.0	50	7.5m	20	.20	150R	DO7
162	JAN1N937B	5	9.0	50	7.5m	20	41 △	175A	DO7
163	1N938	5	9.0	.50	7.5m	20	.10	75R	DO7
164	1N938A	5	9 0	50	7 5m	20	.10	100R	DO7
165	1N938B	5	9 0	50	7 5m	20	10	150R	DO7
166	JAN1N938B	5	9 0	50	7.5m	20	2 △	175A	DO7
167	1N939	5	9.0	.50	7 5m	20	05	75R	DO7
168	1N939A	5	9.0	50	7.5m	20	.05	100R	DO7
169	1N939B	5	9.0	.50	7 5m	20	.05	150R	DO7
170	JAN1N939B	5	9.0	.50	7 5m	20	.1 △	175A	DO7
171	1N940	5	9 0	50	7 5m	20	02	75	DO7
172	1N940A	5	9.0	50	7 5m	20	.02	100	DO7
173	1N940B	5	9.0	50	7 5m	20	02	150	DO7
174	JAN1N940B	5	9 0	.50	7 5m	20		175A	DO7
175	PS1215	5	9 0	50	1.0m	150	1.0	175S	A1gb
176	PS1215A	5	9 0	50	1 0m	150	50	175S	A1gb
177	PS1215B	5	9 0	50	1 0m	150	.20	175S	A1gb
178	PS1215C	5	9.0	50	1 0m	150	10	175S	A1gb
179	SVC925	5	9.0	.50	7 5m	20	.10	175	DO7
180	SVC950	5	9 0	.50	7.5m	20	10	175	DO7
181#	ZC009	5	9.0	.60	1.0m	52	4 4	100	A3k
182#	ZD009	10	9.0	.60	5 0m	52	4.4	100	A3k
183	1N2035-3	5	9.0	75	10m	15	6 0	150J	DO12
184	SV1013	5	9 0	75	10m	15 ∅	5.7	150	A82f
185	WZ913	5	9 0	75	10m	15 ∅		150A	A1ep
186#	1S482	10	9 0	1 0	30m	15	5.5	150J	A115
187▼#	BZ090	5	9 0	1 0	30m	6.0	5.6	175J	A60t
188#	SZL9	7	9 0	1 3	50m	3.5		150J	M72
189#	ZC2009	5	9.0	1 8	1 0m	52	4.7	150	DO3
190#	ZD2009	10	9 0	1.8	1.0m	52	4 5	150	DO3
191#	VR9F	5	9 0	2 2	20m	4.0		200S	DO3
192#	1S492	10	9 0	3.0	120m	15	5 5	150J	S112
193	3Z9.0,A,B	xxx	9.0	3 0	84m	3 0		150	A222
194#	VR9E	5	9 0	5 8	20m	4 0		200S	DO4
195	1N2044-3	5	9.0	10	1	.80	6 0	150J	DO4
196	1N5632		9 09	1.0	1.0m		6.8	175A	DO13
197	1N4765B		9 1		500u	300	1.0	150	DO7
198	1N4766B		9 1		500u	300	.50	150	DO7
199	1N4767B		9 1		500u	300	.20	150	DO7
200	1N4768B		9 1		500u	300	10	150	DO7
201	1N4769B		9 1		500u	300	.05	150	DO7
202	1N4770B		9.1		1 0m	200	1 0	150	DO7
203	1N4771B		9.1		1.0m	200	50	150	DO7
204	1N4772B		9 1		1.0m	200	20	150	DO7
205	1N4773B		9 1		1 0m	200	10	150	DO7
206	1N4774B		9.1		1 0m	200	05	150	DO7
207#	BZX55C9V1	6	9.1		5 0m	10			A1ct
208	DSZ3009	10	9 1		75m	3 0	5.0		A266
209	MC72	x	9 1		10m	19			M409b
210#	MR91E-H	15	9 1			30			DO7
211#	RZ9.1	5	9 1	.08	5.0m	40		150A	C18e
212#	RZZ9 1	5	9.1	.08	5.0m	40		150A	C18e
213▼#	BZX84C9V1	5	9 1	110m	5 0m	20	6.5	125J	M500
214#	AZ9.1	5	9 1	.15	5.0m	20		170A	DO7
215#	BZ9 1	5	9 1	.15	5 0m	60		170A	DO7
216#	Z9.1∅	5	9.1	150m	5.0m	40		150A	C18d
217#	ZZ9 1	5	9 1	.15	5.0m	40		150A	C18d
218#	OAZ272	20	9.1	.23	1.0m	8.0		150J	A3

SYMBOLS AND CODES EXPLAINED IN INTERPRETER

2. SILICON REFERENCE DIODES

IN ORDER OF (1) REF. VOLTAGE, (2) DISSIPATION, and (3) TYPE No.

LINE No.	3 TYPE No.	TOLERANCE 1 20 10 5 2 ± (%)	NOM REF VOLT. (V)	2 MAX. DISS @ 25°C (W)	TEST CUR. Izt (A)	MAX DYN IMP (Ω)	TEMP COEFF Tc	MAX TEMP (°C)	DWG No.
1	1/4A9 1,A,B	xxx	9 1	25	6 9m	10	6 0	175	DO7
2	1/4M9 1Z,10,5	xxx	9 1	25	6 9m	10	6 5	175J	A1cy
3	25N9 1	20	9.1	25	6.9m	10		250	DO7
4	1N713,A	xx	9.1	25	12m	7 0	6.0	175A	DO7
5	1N713B	20	9 1	25	12m	7 0			DO7
6	1N4103	5	9.1	25	25m	200		200J	DO7
7	1N4696	5	9 1	25	05m			200A	DO14
8	1N4765	5	9 1	25	50m	350	1 0	175A	DO7
9	1N4765A	5	9 1	25	50m	350	1 0	175A	DO7
10	1N4766	5	9.1	25	50m	350	50	175A	DO7
11	1N4766A	5	9 1	25	.50m	350	50	175A	DO7
12	1N4767	5	9 1	25	.50m	350	20	175A	DO7
13	1N4767A	5	9 1	25	50m	350	20	175A	DO7
14	1N4768	5	9 1	25	50m	350	10	175A	DO7
15	1N4768A	5	9 1	25	50m	350	10	175A	DO7
16	1N4769	5	9 1	25	50m	350	05	175A	DO7
17	1N4769A	5	9 1	25	50m	350	05	175A	DO7
18	1N4770	5	9 1	25	1 0m	200	1 0	175A	DO7
19	1N4770A	5	9 1	25	1 0m	200	1 0	175A	DO7
20	1N4771	5	9.1	25	1 0m	200	50	175A	DO7
21	1N4771A	5	9 1	25	1 0m	200	50	175A	DO7
22	1N4772	5	9 1	25	1 0m	200	20	175A	DO7
23	1N4772A	5	9 1	25	1 0m	200	.20	175A	DO7
24	1N4773	5	9 1	25	1.0m	200	10	175A	DO7
25	1N4773A	5	9 1	25	1.0m	200	.10	175A	DO7
26	1N4774	5	9 1	25	1 0m	200	.05	175A	DO7
27	1N4774A	5	9 1	25	1 0m	200	05	175A	DO7
28#	02Z9 1A	5	9 1	250m	6 0m	30	6 5	175J	DO35
29#	1109	10∅	9.1	25	10m	8 0	5 5	150J	C18f
30#	BZY83C9V1	5	9.1	25	5 0m	10	8 △	150J	C1g
31#	BZY85C9V1	5	9 1	25 §	5 0m	10	8 △	150J	A171f
32	GLA91,A,B	xxx	9.1	.25	1 0m	75	6 8	175	DO7
33#	HS2091	5	9 1	25	5 0m			175A	DO7
34#	KS2091A	5	9 1	250m	5 0m	15	8.0 △	150A	DO7
35#	KS2091B	10	9 1	250m	5 0m	15	8 0 △	150A	DO7
36	LAC2009	10	9 1	250m	1 0m	100			M520a
37	MCPD536A	10	9 1	25	10m	19		150A	M411
38	MGLA91,A,B	xxx	9 1	25	1 0m	75	6 8	150	A2
39#	MR91C-H	5	9 1	.25	5 0m	20		250	DO7
40	PD6013,A	xx	9 1	25	5 0m	9 0		150	A109
41	PD6054	5	9 1	25	5 0m	6 0		150	A2c
42	PD6209	10	9 1	250m	1 0m	100			A109
43#	OAZ247	5	9 1	278m	1 0m	8 0 ∅	62	150J	A24c
44#	BZY63	5	9 1	28	1 0m	8 0		150J	A3
45#	BZY68	15	9 1	28	1 0m	8 0		150J	A3
46	MC6013,A	xx	9 1	30	10m	19		175	A2m
47	OAZ207	5	9 1	30	1 0m	28	6.8	150J	C1c
48	OAZ212	15	9 1	30	1 0m	28	6 8	150J	C1c
49#	Z1A9.1	1	9 1	320m	5 0m	10	8 0 △	150A	C29
50#	Z1B9 1	5	9.1	320m	5 0m	10	8.0 △	150A	C29
51#	Z1C9 1	10	9 1	320m	5 0m	10	8 0 △	150A	C29
52#	Z1D9.1	15	9 1	320m	5 0m	10	8 0 △	150A	C29
53	LDZ70/9A1	5	9 1	360m	20m	10		150J	M401
54#	1N757	10	9 1	400m	20m	10	5 6	175A	A1
55#	1N757A	5	9 1	400m	20m	10	5 6	175A	A1
56	JAN1N757A	5	9 1	400m	20m	6 0	6 8	175A	A1dd
57	1N960,A,B	xxx	9 1	40	14m	7 5	5.1	175S	DO7
58	1N3517	5	9 1	40	10m	6 0	5 6	200A	DO7
59	JAN1N4103	5	9 1	400m	250u	200	8 0	175A	A1sx
60	1N5529	20	9 1	400m§	1 0m			175A	DO7
61	1N5529A	10	9 1	400m§	1 0m			175A	DO7
62	1N5529B	5	9 1	400m§	1.0m	45		175A	DO7
63▼	JAN1N5529B	5	9 1	400m	1 0m	45	6 8	200A	DO14
64	1N5529C	2	9.1	400m§	1 0m	45		175A	DO7
65	1N5529D	1	9 1	400m§	1 0m	45		175A	DO7
66▼	1N5735B	5	9 1	400m	10m	15	6 5	200J	DO35
67#	1S2091△	10	9.1	400m	5 0m	15	6 0	150A	A1
68#	1S2091A	5	9 1	40	5 0m	15	6 0	150A	A1
69#	1S7091,B	x15	9 1	40	5 0m	20	6 0	150A	A1
70#	1S7091A	5	9 1	40	5 0m	15	6 0	150A	A1
71#	5519	5	9 1	40	5 0m	10	5 5	125A	A1ce
72#	BZX46C9V1	5	9 1	400m	14	7 5	6 5	175J	DO35
73▼#	BZX71B9V1	2	9 1	400m§	5 0m	15		175J	DO35
74#	BZX71C9V1	5	9 1	400m§	5 0	10		200S	A9m
75#	BZX74C9V1	5	9 1	400m	12m	100	5 5		A31e
76#	BZX79C9V1	5	9 1	400m	5 0m	15	60	200J	A257
77#	BZX83C9V1	5	9 1	400m	5 0m	10	5 5	150J	DO35
78▼#	BZY85B9V1	2	9 1	400m	5 0m	10	5 4	150J	DO7
79#	BZY88C9V1	5	9 1	40	5 0m	4 7 ∅		150	DO7
80	C4015	10	9 1	40	14m	7 5		175	A134a
81	C6015	10	9 1	400m	1 0m	25 ∅	5 5	175A	M371c
82	C6015A	5	9 1	400m	1 0m	25 ∅	5 5	175A	M371c
83	C6115	10	9 1	400m	1 0m	25	5 5	175A	M131a
84	C6115A	5	9 1	400m	1 0m	25	5 5	175A	M131a
85	CZA9.1D,10,5	xxx	9 1	40 ☑	250u	200	5.0	175J	M371
86	CZB9 1D,10,5	xxx	9.1	40 ☑	6 9m	10	5 0	175J	M371
87	CZC9 1D,10,5	xxx	9.1	40 ☑	14m	7 5	5 0	175J	M371
88	CZD9.1D,10,5	xxx	9 1	.40 ☑	250u	200	5.0	175J	M451
89	CZE9 1D,10,5	xxx	9 1	40 ☑	14m	7 5	5 0	175J	M451
90	CZF9.1D,10,5	xxx	9 1	40 ☑	250u	200	4 4	175J	M452
91	CZG9 1D,10,5	xxx	9.1	40 ☑	20m	10	6 1	175J	M452
92	HM9.1,A,B	xxx	9 1	400m§	14m	7 5		175A	A196c
93#	HS7091	5	9 1	40	5 0m			175A	DO7
94#	KS091A	5	9.1	40	5 0m	15	10 △	150A	DO7
95#	LR91CH	5	9 1	40	5 0m	20	5 5	150	DO7
96	M4Z9 1,A,-20	xx*	9.1	40	14m	7 5		150A	A1kk
97#	M9Z	5 0	9.1	400m	5 0m	10	5 0	150A	DO7
98	MACZA9 1D,10,5	xxx	9.1	40 ☑	250u	200	5 0	175J	M453
99	MACZB9 1D,10,5	xxx	9.1	40 ☑	6 9m	10	5.0	175J	M453
100	MACZC9 1D,10,5	xxx	9 1	.40 ☑	14m	7.5	5 0	175J	M453
101	MACZD9.1D,10,5	xxx	9 1	.40 ☑	250u	200	5 0	175J	M453
102	MACZE9 1D,10,5	xxx	9 1	40 ☑	14m	7 5	5 0	175J	M453
103	MACZF9.1D,10,5	xxx	9 1	40 ☑	250u	200	4 4	175J	M453
104	MACZG9 1D,10,5	xxx	9.1	40 ☑	20m	10	6 1	175J	M453
105	MBCZA9 1D,10,5	xxx	9 1	40 ☑	250u	200	5.0	175J	M454
106	MBCZB9 1D,10,5	xxx	9 1	40 ☑	6 9m	10	5 0	175J	M454
107	MBCZC9 1D,10,5	xxx	9 1	400m☑	14m	7 5	5 0	175J	M454
108	MBCZD9 1D,10,5	xxx	9 1	40 ☑	250u	200	5 0	175J	M454
109	MBCZE9 1D,10,5	xxx	9 1	40 ☑	14m	7 5	5 0	175J	M454
110	MBCZF9 1D,10,5	xxx	9 1	400m☑	250u	200	4 4	175J	M454
111	MBCZG9.1D,10,5	xxx	9 1	40 ☑	20m	10	6 1	175J	M454
112	MCCZA9 1D,10,5	xxx	9.1	40 ☑	250u	200	5 0	175J	M455
113	MCCZB9 1D,10,5	xxx	9 1	40 ☑	6 9m	10	5 0	175J	M455
114	MCCZC9 1D,10,5	xxx	9 1	40 ☑	14m	7 5	5 0	175J	M455
115	MCCZD9 1D,10,5	xxx	9 1	40 ☑	250u	200	5 0	175J	M455
116	MCCZE9.1D,10,5	xxx	9 1	40 ☑	14m	7 5	5 0	175J	M455
117	MCCZF9 1D,10,5	xxx	9 1	40 ☑	250u	200	4 4	175J	M455
118	MCCZG9 1D,10,5	xxx	9 1	40 ☑	20m	10	6 1	175J	M455
119	MDCZA9 1D,10,5	xxx	9 1	40 ☑	250u	200	5 0	150A	M410
120	MDCZB9.1D,10,5	xxx	9 1	40 ☑	6.9m	10	5 0	150A	M410
121	MDCZC9.1D,10,5	xxx	9 1	40 ☑	14m	7.5	5 0	150A	M410
122	MDCZD9 1D,10,5	xxx	9 1	.40 ☑	250u	200	5 0	150A	M410
123	MDCZE9 1D,10,5	xxx	9 1	40 ☑	14m	7 5	5 0	150A	M410
124	MDCZF9 1D,10,5	xxx	9 1	40 ☑	250u	200	4 4	150A	M410
125	MDCZG9 1D,10,5	xxx	9 1	.40 ☑	20m	10	6.1	150A	M410
126	MZ500-15	10	9.1	4 §	20m	10 ∅	6 8	175J	DO7
127	MZC9 1A10	†	9 1	400m§	5 5m	54	6.8 △	175J	M468
128	MZC9.1B10	§†	9 1	400m§	250u	200		175J	M468
129#	Z5A9 1	1	9.1	400m§	5 0m	15	8 0 △	200J	A1hs
130#	Z5B9 1	5	9 1	400m§	5 0m	15	8 0 △	200J	A1hs
131#	Z5C9.1	10	9 1	400m§	5.0m	15	8 0 △	200J	A1hs
132#	Z5D9 1	15	9 1	400m§	5 0m	15	8 0 △	200J	A1hs
133#	ZF9.1	5	9 1	400m	5 0m	10	6 0	150J	DO7
134#	ZP9 1#	5	9 1	400m	5 0m	10	6 5	150J	DO7
135	1/2Z9 1T5	5	9 1	50	14m	6 0		175	A94f
136	1N5239	20†	9 1	50	20m			200A	DO7
137	1N5239A,B	§∅	9 1	50	20m	6 0	6 8	200A	DO7
138▼	HEPZ0219-RT	10	9 1	500m	20	50			C103
139	MCPD536B	10	9 1	500m	10m	19		150A	M411a
140	MCPD536C	10	9 1	500m	10m	19		150A	M277d
141	MTZ613,A	xx	9 1	50	10m	19		175A	A60e
142	MZ92-9 1	†	9 1	500m§	20m		6.2	150J	C103
143	PS8912	5	9 1	50	20m	3 0	6 6	150	A60p
144	S5239,A,B	xxx	9 1	500m	20m	10	6.8	175	DO41
145#	ZSF9 1	1	9 1	500m	7 0m	10	1 0	150S	M487a
146#	Z0A9 1	1	9 1	520m	5 0m	6 0	8 0 △	150J	A1ef
147#	Z0B9 1	5	9 1	520m	5 0m	6.0	8 0 △	150J	A1ef
148#	Z0C9.1	10	9.1	520m	5 0m	6 0	8 0 △	150J	A1ef
149#	Z0D9 1	15	9 1	520m	5 0m	6 0	8 0 △	150J	A1ef
150	1N4631	5	9 1	60	14m	700	6 9	200A	DO14
151	LVA91A	5	9 1	600m	1 0m	100			DO14
152	LVA91B	2	9 1	600m	1 0m	100			DO14
153	LVA391A	5	9 1	600m	1 0m	60			DO14
154	LVA391B	2	9 1	600m	1 0m	60			DO14
155#	UZ9 1	10	9 1	60	66m	4 0	6 0	135A	DO3
156#	ZW9 1	5	9 1	600m	5 0m	10	6 0	150J	A1bg
157	7JZ9 1	†	9 1	750m	14m	7 5	5 1	175	DO15
158	7Z9 1,A,B,D	xxxx	9 1	750m	14m	7 5	5 1	175	DO27
159	7Z9 1C	☑	9.1	750m	14m	7 5	5.1	175	DO27
160	7ZM9.1,A,B,D	xxxx	9 1	750m	14m	7.5	5 1	175	DO41
161	7ZM9 1C	☑	9 1	750m	14m	7 5	5 1	175	DO41
162	1N3678	20	9 1	750m§	14m	7 5		175S	A1az
163	1N3678A	10	9 1	750m§	14m	7 5		175S	A1az
164	1N3678B	5	9 1	750m§	14m	7 5		175S	A1az
165	MC6113,A	xx	9 1	75	25m	19		175A	A2d
166	MMZ9 1,A,-20	xx*	9.1	75	14m	7 5		150A	A1kk
167	MZ9.1T20,10,5	xxx	9 1	75	18m	4 7	6 0	165A	A152
168	1A9.1M,A,B	xxx	9.1	1.0	28m	5.0		75A	DO15
169	1E9 1Z,10,5	xxx	9 1	1 0	28m	5 0	5 1	150A	A52g
170	1M9.1Z,10,5	xxx	9.1	1 0	28m	5.0	5 1	175S	DO1
171	1N1770,A	xx	9.1	1.0	50m	3.0		175S	DO13
172	1N3019	20	9.1	1.0	28m	5.0		175A	A31a
173	1N3019A	10	9.1	1.0	28m	5 0		175A	A31a
174	1N3019B	5	9 1	1 0	28m	5.0		175A	A31a

SYMBOLS AND CODES EXPLAINED IN INTERPRETER

2. SILICON REFERENCE DIODES

IN ORDER OF (1) REF. VOLTAGE, (2) DISSIPATION, and (3) TYPE No.

LINE No	3 TYPE No	TOLERANCE 20 10 5 2 ± (%)	1 NOM. REF. VOLT. (V)	2 MAX. DISS @ 25°C (W)	TEST CUR Izt (A)	MAX. DYN. IMP (Ω)	TEMP. COEFF Tc	MAX TEMP (°C)	DWG. No.
1	JAN1N3019B	5	9 1	1 0	28m	5 0	6 8	175A	A31c
2	1N4161	20	9 1	1 0	28m	5.0	5.1	175	DO29
3	1N4161A	10	9 1	1 0	28m	5 0	5 1	175	DO29
4	1N4161B	5	9 1	1 0	28m	5 0	5 1	175	DO29
5	1N4326,A,B	xxx	9 1	1 0	28m	5 0	5 1	300S	DO7
6♦	1N4403	20	9.1	1 0	28m	2 5		175S	A266a
7	1N4403A	10	9 1	1 0	28m	2 5	5 0	175A	A1cm
8	1N4403B	5	9 1	1 0	28m	2 5	5 0	175A	A1cm
9	1N4660	5	9 1	1 0	28m	200	6 8	200A	DO15
10	1N4739	10	9.1	1 0	28m	5 0		200A	A1ay
11	1N4739A	5	9 1	1 0	28m	5 0		200A	A1ay
12	1N5562	20	9 1	1 0 §	28m			200A	A196d
13	1N5562A	10	9 1	1 0 §	28m	5 0		200A	A196d
14	1N5562B	5	9 1	1 0 §	28m	5.0		200A	A196d
15	1N5632A		9 1	1 0	1 0m		6 8	175A	DO13
16	1R9 1,A,B	xxx	9 1	1 0	28m	5 0	5 1	175A	A52c
17#	1S3009	xx	9 1	1 0	20m	5 0	5 0	150	A3
18	1Z9 1,A,B	xxx	9 1	1 0	28m	5 0		150	A1ay
19	1Z9 1T20,10,5	xxx	9 1	1 0	25m	5 0	6 0	165A	A89c
20#	1ZC9.1T10,5	xx	9 1	1 0	25m	5 0	6.0	165A	A31p
21#	22Z6F,AF	12,6	9 1	1 0	10m	18	8 0	150J	DO13
22#	BZX29C9V1	5	9 1	1 0	20m	5 0	5 1	175J	A1cd
23#	BZX61C9V1	5	9 1	1 0	20m	8 0	5 0	175J	A3y
24♦	BZX85C9V1	5	9 1	1 0	25m	5 0	5 8	150A	DO15
25	CD31-00012	5	9 1	1 0	28m	5 0	5 5	200A	A1ce
26	CD31-12019	5	9 1	1 0	28m	5 0		200A	A1ce
27	CD32-12049	5	9 1	1 0	28m	5 0			
28	CZ9.1,A,B,D	xxxx	9 1	1 0	40m	13	5 1	175	DO15
29	CZ9 1C	∅	9 1	1 0	40m	13	5 1	175	DO15
30	EVR9,A,B	xxx	9 1	1 0	28m	14		175A	DO27
31#	FPZ9V1	5	9 1	1 0	28m	400	5 1		A31h
32	G9 1T20,10,5	xxx	9 1	1 0	28m	5 0	6 5	175A	DO15
33#	GZ9 1	5	9.1	1 0	25m	10 △		150A	S115
34▼	HEP104-RT	10	9 1	1 0	28	6.0			DO41
35	HW9 1,A,B	xxx	9 1	1 0	28m	5 0		175	A196
36	JZ9 1,A,B,D	xxxx	9 1	1 0	28m	5 0	5 1	175	DO15
37	JZ9 1C	∅	9.1	1 0	28m	5 0	5.1	175	DO15
38	LPM9 1,A,-20	xx*	9 1	1 0	28m	5 0		150A	A1kk
39	PS10019B	5	9 1	1 0	28m	5 0		175A	A60p
40	PS10063	5	9 1	1.0	28m	3 0	6.8	150	A60p
41	SZ9 1	xxxx	9 1	1 0	20m	4 0 ∅	5 3	150A	A3g
42	TZ9.1,A,B,D	xxxx	9 1	1 0	40m	13	5 1	175	DO27
43	TZ9 1C	∅	9 1	1 0	40m	13	5 1	175	DO27
44	UZ8709	5	9 1	1 0	28m	5 0	5 0	175	A146h
45	UZ8809	10	9 1	1 0	28m	5 0	5 0	175	A146h
46	VR9 1,A,B	xxx	9 1	1.0	28m	5 0		125A	A1b
47#	Z2A91F	20§∅	9 1	1 0	20m	23	6.0	100J	A141
48#	Z4A9.1	1	9 1	1 0	50m	3.0	8 0 △	150J	A1ef
49#	Z4B9.1	5	9 1	1.0	50m	3 0	8.0 △	150J	A1ef
50#	Z4C9 1	10	9.1	1 0	50m	3.0	8 0 △	150J	A1ef
51#	Z4D9 1	15	9 1	1 0	50m	3.0	8 0 △	150J	A1ef
52	Z4XL9.1,B	xx	9 1	1.0	20m	15	5 6	165A	DO13
53	Z9.1,A,B,D	xxxx	9 1	1.0	28m	5 0	5 1	175	DO27
54	Z9.1C	∅	9 1	1.0	28m	5 0	5 1	175	DO27
55	ZA9.1,A,B	xxx	9 1	1 0	28m	5 0		150C	A1ew
56	ZB9.1#	†	9 1	1.0 §	28m	5 0		150A	A1bc
57	ZD9 1∅,A,B	xxx	9.1	1 0	28m	5 0	5 0	175A	A1cm
58	ZH9 1,A,B	xxx	9 1	1 0	28m	5 0	5.1	175A	DO1
59	ZM9 1,A,B,D	xxxx	9 1	1 0	28m	5 0	5 1	175	DO41
60	ZM9.1C	∅	9.1	1 0	28m	5 0	5.1	175	DO41
61#	7719	5	9.1	1.1	100m	5 0	5.5	125A	A1bu
62#	BZY92C9V1	5	9 1	1.1	50m	4 0	5.0	150J	DO13
63	1N4831,A,B	xxx	9 1	1.2	28m	8 0	6 8	175	DO29
64#	ZD9.1#	5	9 1	1.3	50	4.0	5 0	150J	DO13
65#	ZY9 1	5	9.1	1.3	50	4 0	5 0	150J	A1bg
66▼	1N3788	20	9 1	1 5	41m	4.0	6 8	175S	C14∅
67▼	1N3788A	10	9 1	1 5	41m	4 0	6.8	175S	C14∅
68▼	1N3788B	5	9 1	1.5	41m	4 0	6 8	175S	C14∅
69	1N4464	5	9 1	1 5	28m	4 0		175A	A196
70	JAN1N4464	10	9 1	1 5	28m	4 0	6.8	175A	A1v
71#	1S4009,A	xx	9 1	1.5	20m	2 1	5.0	150A	DO1
72	1 5DKZ9 1,A,B	xxx	9 1	1 5	41m	4 0		175A	DO27
73	1 5JZ9 1,A,B,D	xxxx	9 1	1 5	41m	4 0	6.8	175	DO15
74	1 5JZ9 1C	∅	9 1	1 5	41m	4.0	6.8	175	DO15
75	1 5R9.1,A,B	xxx	9 1	1.5	42m	4 0	5 1	175A	A52c
76	1 5Z9 1,A,B,D	xxxx	9 1	1 5	41m	4 0	6.8	175	DO27
77	1.5Z9 1C	∅	9 1	1.5	41m	4 0	6 8	175	DO27
78#	BZY96C9V1	5	9 1	1.5	50m	4.5	6 4	175J	DO1
79	MC6313,A	xx	9 1	1 5	100m	18			A1q
80	MZ1000-12	10	9.1	1 5 §	28m	7 5 ∅	6 8	175J	A1ay
81#	SZ91A	5	9 1	1 5	20m	18	5.0	160A	A26
82#	Z2A9 1	1	9 1	1.5	50m	4 0	8.0 △	150J	A244
83#	Z2B9 1	5	9 1	1.5	50m	4 0	8 0 △	150J	A244
84#	Z2C9.1	10	9 1	1.5	50m	4 0	8 0 △	150J	A244
85#	Z2D9 1	15	9 1	1 5	50m	4.0	8 0 △	150J	A244
86#	Z3A9.1	1	9 1	1 5	100m	2 0	8 0 △	150J	S4f
87#	Z3B9 1	5	9 1	1 5	100m	2 0	8 0 △	150J	S4f
88#	Z3B91CF	20§∅	9 1	1 5	20m	4 0	6.5	175J	DO1
89#	Z3C9 1	10	9 1	1 5	100m	2 0	8 0 △	150J	S4f
90#	Z3D9 1	15	9 1	1.5	100m	2 0	8.0 △	150J	S4f
91#	62Z6,A	12,6	9 1	1 8	100m	15	90	150J	DO4
92	2R9 1,A,B	xxx	9 1	2 0	55m	4 0	5 1	175A	DO27
93	2VR9 1,A,B	xxx	9 1	2 0	55m	4 0			A3e
94#	BZZ19	10	9 1	2 0	20m	10		150J	DO4
95	LMZ9 1,A,-20	xx*	9 1	2 0	55m	2 5		150A	A1kk
96	ZBC9 1	†	9 1	2 0 §	56m	3 0		150A	A1bc
97	1N5019	10	9 1	2 5	69m	2 4	5 0	150	A1gn
98	1N5019A	5	9 1	2 5	69m	2 4	5 0	150	A1gn
99#	BZX70C9V1	5	9.1	2 5	50m	4.0	55	150J	A171b
100	1N5066	5	9 1	3 0	75m	3.0		175A	A146j
101	3R9.1,A,B	xxx	9 1	3 0	84m	3 0	5.1	175A	A1rw
102	3TZ9.1,A,B,D	xxxx	9 1	3.0	100m	3 0	6.0	175	A1ec
103	3TZ9 1C	∅	9.1	3 0	100m	3 0	6.0	175	A1ec
104	3VR9 1,A,B	xxx	9.1	3 0	84m	3.0			A222
105	CZ5066	10	9.1	3.0	75m	3.0	45	175A	A196e
106	M3Z9.1,A	xx	9 1	3 0	82m	3 9		150A	A1kk
107	MZ709	5	9 1	3 0	75m	3.0	5 0	175A	A146j
108	MZ809	10	9 1	3 0	75m	3.0	5.0	175A	A146j
109	MZ909	20	9.1	3 0	75m	3.0	5 0	175A	A146j
110	UZ709	5	9 1	3.0	75m	3.0	5 0	175A	A60
111	UZ809	10	9.1	3.0	75m	3 0	5.0	175A	A146f
112	UZ909	20	9 1	3.0	75m	3 0	5 0	175A	A60
113	ZAC9 1,A,B	xxx	9 1	3 0	28m	5.0		150C	A1ey
114	ZCC9.1	†	9.1	3 0 §	75m	3 0		150A	A1ey
115	3T9 1,A,B	xx*	9.1	3 5	50m	3.0			DO4
116	3Z9.1T20,10,5	xxx	9 1	3.5	80m	3.0	6.0	165	DO4
117	1N4017,A,B	xxx	9 1	5.0	135m	2 0	6.8	180A	S82
118	1N4957	5	9.1	5.0	150m	2.0		175A	A146m
119	JAN1N4957	5	9.1	5 0	150m	2 0	6.0	175A	A248f
120♦	1N5346	20	9 1	5.0	150m			200A	A1ee
121▼	1N5346A	10	9.1	5.0	150m	2 0		200A	A1ee
122▼	1N5346B	5	9.1	5.0	150m	2.0		200A	A1ee
123▼	5ZS9 1,A,B	xxx	9 1	5.0 §	150m	2 0		200A	A1ts
124#	1309	10∅	9.1	5 0	60m	3 0	5 5	150J	A9h
125▼	CTZC9 1,A,B,D∅	xxxx	9 1	5.0 §	150m	2 0 ∅	5 1	175A	A1ey
126▼	CTZC9 1C∅	1	9 1	5.0 §	150m	2.0 ∅	5 1	175A	A1ey
127▼	CTZC9.1E∅	3	9 1	5.0 §	150m	2 0 ∅	5 1	175A	A1ey
128	DSZ5709	5	9 1	5.0	150m	2 0	6.0	175A	A60r
129	DSZ5809	10	9 1	5.0	150m	2 0	6 0	175A	A60r
130	MZ5709	5	9 1	5 0	150m	2 0	5 0		A60f
131	MZ5809	10	9 1	5.0	150m	2 0	5 0		A60f
132	MZ5909	20	9.1	5.0	150m	2 0	5 0		A60f
133▼	TZC9 1,A,B,D	xxxx	9.1	5.0 §	150m	2.0 ∅	5 1	175A	A1ey
134▼	TZC9.1C	1	9.1	5.0 §	150m	2.0 ∅	5 1	175A	A1ey
135▼	TZC9.1E	3	9.1	5 0 §	150m	2 0 ∅	5 1	175A	A1ey
136▼	UZ5709	5	9.1	5.0	150m	2 0	6 0	175A	A146m
137♦	UZ5809	10	9 1	5 0	150m	2.0	6 0	175A	A146m
138	UZ5909	20	9.1	5.0	150m	2.0 ∅	5.0	175A	A146m
139	ZC9.1	†	9 1	5.0 §	150m	2.0		150A	A1ey
140	UZ4709	5	9.1	8.0	150m	2 0		175A	A146m
141	UZ4809	10	9 1	8.0	150m	2.0		175A	A146m
142	1N1808,A	xx	9.1	10	500m	1 0		175A	DO4
143	1N1808B	20	9.1	10	500m	1 0			S11e
144	1N1808C,CA∅	xx	9.1	10 §	.50	1.0		175J	S19a
145	1N2973,A,B	xxx	9 1	10	275m	2 0		175C	DO4∅
146	JAN1N2973B,RB	5	9.1	10	275m	2 0	6.8	150C	DO4
147	1N4261	20	9 1	10	275m	2.0	5.1	175C	S134
148	1N4261A	10	9.1	10	275m	2.0	5.1	175C	S134
149	1N4261B	5	9 1	10	275m	2 0	5.1	175C	S134
150	JAN1N4261B	5	9 1	10 §	275m	2 0	6.8	175S	S134a
151#	1S6009	10	9 1	10	200m	2.5	5.0	150	DO4
152#	1S6009A	5	9 1	10	200m	2.5	5.0	150	DO4
153	10PZ9.1,A,B,D	xxxx	9.1	10	275m	2.0	5 1	175	DO4
154	10PZ9.1C	∅	9.1	10	275m	2 0	5.1	175	DO4
155	10RZ9.1,A,B,D	xxxx	9.1	10	600m	3 0	5.1	155	DO4
156	10RZ9.1C	∅	9.1	10	600m	3.0	5.1	155	DO4
157	10Z9 1T20,10,5	xxx	9.1	10	250m	1.2	6 0	165	DO4
158#	OAZ227	5	9.1	10	20m	10		150J	DO4
159#	OAZ292	15	9.1	10	20m	2.2 ∅	6.4	150	DO4
160	UZ7709	5	9.1	10	275m	1.0	5.0	175	S277∅
161	UZ7809	10	9 1	10	275m	1.0	5.0	175	S277∅
162	UZ7909	20	9.1	10	275m	1 0	5.0	175	S277∅
163#	Z5D91CF	20§∅	9.1	10	50m	2.5	5.5	150J	DO4
164#	ZC5009	5	9.1	10	200m	2.5	4.1	150A	S19
165#	ZD5009	10	9.1	10	200m	2 5	4.1	150A	S19
166	1209	10∅	9.1	15	300m	.50	5.5	150J	S87
167#	BZY93C9V1	5	9.1	20 §	1	50	5.0	175J	DO4∅
168	82Z6,A	12,6	9 1	25	400m	2.5	7.0	150J	S179
169#	ZX9.1	5	9.1	25 ∅	50	4.0	5 0	150J	M41
170	1N2807,A,B	xxx	9.1	50	1.3	.50	5 1	175S	C5a
171	JAN1N2807B,RB	5	9.1	50	1 3	.50	6.8	150C	C5a
172	1N3308	20	9.1	50	1.3	500m	5.0	175J	DO5
173	1N3308A	10	9.1	50	1.3	500m	5.0	175J	DO5
174	1N3308B	5	9.1	50	1.3	500m	5.0	175J	DO5
175	JAN1N3308B,RB	5	9.1	50	1 4	.50	6.8	150	DO5
176	50T9 1,A,B	xx*	9.1	50	1.3	.50	5.1		S19e
177#	BZY91C9V1	5	9 1	75 §	2	.40	9 0	175J	DO5∅
178#	ZC709△	5	9.1	100 §	100	2 0	5.0	175J	S125d∅
179	LID9 1,A	xx	9 1	400	13m	7.5		150A	M401
180▼	BLVA192	2 1	9.2	250m	250u	500	3.5	150A	A9n
181▼	BLVA492	2.1	9.2	250m	250u	350	3 5	150A	A9n
182▼	LVA192	2 1	9.2	400m	250u	350	6.6	150A	DO14
183▼	LVA492	2 1	9.2	400m	250u	175	6 6	150A	DO14
184#	BZY76	15	9 2	1 5	20m			150J	DO2
185	250ZE9 2	10	9 2	250 §	20		8 0	190A	S83
186	250ZF9.2	10	9.2	250 §	20		8 0	190A	M56a
187	1N2620	4 3	9 3	.75	10m	15	1 0	75R	A31a
188	1N2620A	4.3	9 3	.75	10m	15	1 0	100R	A31a
189	1N2620B	4 3	9.3	75	10m	15	1 0	150R	A31a
190	1N2621	4 3	9 3	.75	10m	15	50	75R	A31a
191	1N2621A	4.3	9 3	.75	10m	15	50	100R	A31a
192	1N2621B	4.3	9.3	.75	10m	15	50	150R	A31a
193	1N2622	4 3	9.3	.75	10m	15	20	75R	A31a
194	1N2622A	4 3	9 3	.75	10m	15	20	100R	A31a
195	1N2622B	4 3	9.3	.75	10m	15	.20	150R	A31a
196	1N2623	4.3	9.3	75	10m	15	10	75R	A31a

SYMBOLS AND CODES EXPLAINED IN INTERPRETER

2. SILICON REFERENCE DIODES

IN ORDER OF (1) REF. VOLTAGE, (2) DISSIPATION, and (3) TYPE No.

LINE No.	3 TYPE No	TOLERANCE 20 10 5 2 ± (%)	1 NOM. REF. VOLT. (V)	2 MAX. DISS. @ 25°C (W)	TEST CUR. Izt (A)	MAX. DYN. IMP. (Ω)	TEMP. COEFF Tc	MAX. TEMP (°C)	DWG. No.
1	1N2623A	4.3	9 3	75	10m	15	.10	100R	A31a
2	1N2623B	4 3	9 3	75	10m	15	.10	150R	A31a
3	1N2624	4 3	9.3	75	10m	15	.05	75R	A31a
4	1N2624A	4 3	9 3	75	10m	15	.05	100R	A31a
5	1N2624B	5	9 3	75	10m	15	.05	150R	A31a
6	SRE4-05	4	9.4		10m	15	.05	70A	A126a
7	SRE7-05	4	9 4		10m	15	.10	70A	A126a
8	SRE9A05	4	9 4		10m	15	.10	125A	A126a
9	SRE12B05	4	9 4		10m	15	.05	185A	A126a
10	SRE17A05	4	9 4		10m	15	.10	125A	A126a
11	SRE23B05	4	9 4		10m	15	.10	185A	A126a
12	SRE33-05	4	9 4		10m	15	.50	70A	A126a
13	SRE86A05	4	9 4		10m	15	.50	125A	A126a
14	SRE115B05	4	9.4		10m	15	.50	185A	A126a
15	SREA4-05	2	9 4		10m	15	.05	70A	A126a
16	SREA7-05	2	9 4		10m	15	.10	70A	A126a
17	SREA9A05	2	9 4		10m	15	.05	125A	A126a
18	SREA12B05	2	9.4		10m	15	05	185A	A126a
19	SREA17A05	2	9 4		10m	15	.10	125A	A126a
20	SREA23B05	2	9.4		10m	15	10	185A	A126a
21	SREA33-05	2	9 4		10m	15	.50	70A	A126a
22	SREA86A05	2	9.4		10m	15	.50	125A	A126a
23	SREA115B05	2	9 4		10m	15	.50	185A	A126a
24#	1S215	5	9 4	300m	10m	20	1 0	150J	A106d
25#	1S216	5	9 4	300m	10m	20	.50	150J	A106d
26	1N2163,A	4x	9.4	1 0	10m	15	.50	70	A126c
27	1N2164,A	4x	9 4	1 0	10m	15	50	125	A126c
28	1N2165,A	4x	9 4	1 0	10m	15	.50	185	A126c
29	1N2166,A	4x	9 4	1 0	10m	15	10	70	A126c
30	1N2167,A	4x	9 4	1 0	10m	15	10	125	A126c
31	1N2168,A	4x	9 4	1 0	10m	15	10	185	A126c
32	1N2169,A	4x	9 4	1 0	10m	15	05	70	A126c
33	1N2170,A	4x	9.4	1 0	10m	15	05	125	A126c
34	1N2171,A	4x	9.4	1 0	10m	15	05	185	A126c
35▼#	BZ094	5	9.4	1 0	30m	6 0	5 8	175J	A60t
36	1N2044D	5	9.5		1	80		150A	S19a
37	1N764-4	5	9.5	25	10m	12	5 0	150	DO7
38▼	BLVA195	2 1	9.5	250m	250u	500	3 8	150A	A9n
39▼	BLVA495	2 1	9.5	250m	250u	350	3 8	150A	A9n
40	SV132	5	9.5	25	10m	15	5 7	150	DO7
41▼	LVA195	2 1	9 5	400m	250u	350	6 8	150A	DO14
42▼	LVA495	2 1	9 5	400m	250u	175	6.8	150A	DO14
43	WZ532	5	9 5	40	10m	10		150A	A31e
44	1N2035-4	5	9 5	75	10m	50	6 0	150J	DO12
45	SV1014	5	9 5	75	10m	15 Ø	5 7	150	A82f
46	WZ914	5	9 5	.75	10m	15 Ø		150A	A1ep
47#	1S225	10	9 5	1 0	35m	4 0		150J	A56a
48	IDA1Z9 5,A,B,CØ	xxxx	9 5	1 0	25m			200A	A1ht
49	1N2044-4	5	9 5	10	1	80	6 0	150J	DO4
50#	1S267	10	9.5	10	350m	2 0		150J	S19g
51	1N1959,A,B	xx1	9 7	40	5.0m	22	6 5	150	DO7
52#	RD10H	10	9 8	10	5.0m	55	6 5	150A	C12b
53▼	BLVA198	2 0	9 8	250m	250u	500	4 0	150A	A9n
54▼	BLVA498	2 0	9.8	250m	250u	350	4 0	150A	A9n
55▼	LVA198	2 0	9 8	400m	250u	350	7 0	150A	DO14
56▼	LVA498	2 0	9 8	400m	250u	175	7 0	150A	DO14
57#	BZX55D10	10	10		5 0m	15			A1ct
58#	BZY84D10	10	10		50m	5 0	8 0		M72
59	DSZ3010	10	10		75m	4 0	6.0		A266
60	PS1511	5	10		5 0m	15	5 0	150A	A1gd
61	PS1512	5	10		5.0m	15	4 0	150A	A1gd
62	PS1513	5	10		5.0m	15	3.0	150A	A1gd
63	PS1514	5	10		5 0m	15	2 0	150A	A1gd
64	PS1515	5	10		5 0m	15	1 0	150A	A1gd
65	PS1516	5	10		5.0m	15	50	150A	A1gd
66	PS1517	5	10		5.0m	15	25	150A	A1gd
67#	RZ10△	5	10	80m	5 0m	50		150A	C18e
68#	RZZ10	5	10	08	5.0m	60		150A	C18e
69▼#	BZX84C10	5	10	110m	5.0m	25	700m	125J	M500
70	1N1986	10	10	150m	5 0m	22	6 5	150	C1
71	1N1986A	5	10	150m	5 0m	22	6 5	150	C1
72	1N1986B	1	10	150m	5 0m	22	6 5	150	C1
73	655C9	5	10	15	5 0m	15	5 2	150A	C3
74#	AZ10Ø	5	10	15	5 0m	25		170A	DO7
75#	LZ10	10	10	15	5.0m	60		170A	DO7
76#	Z10Ø	5	10	150m	5 0m	50		150A	C18d
77#	ZZ10Ø	5	10	15	5.0m	60		150A	C18d
78	1N1932	10	10	200m	5 0m	22	6 5	150A	A82e
79	1N1932A	5	10	200m	5 0m	22	6 5	150A	A82e
80	1N1932B	1	10	200m	5 0m	22	6 5	150A	A82e
81#	KVR10	5	10	20	10m	40	1 5	150A	A1hh
82#	RZ10A	10	10	20	390m	1 3	5 0	125A	DO5
83#	ZS10	1	10	20	5 0m	180		140A	C74
84	1/4A10,A,B	xxx	10	25	6 3m	11	6 0	175	DO7
85	1/4M10Z,10,5	xxx	10	25	6.3m	11	6 8	175J	A1cy
86	25N10	20	10	25	6 3m	11		250	DO7
87	1N714,A	xx	10	25	12m	8 0	6 1	175A	DO7
88	1N714B	20	10	25	12m	8 0			DO7
89	1N765	xx	10	250m	5 0m	45	6 0	150	DO7
90	1N765-1	5	10	25	5 0m	45	6 0	150	DO7
91	1N765A	xx	10	250m	5 0m	45	6 0	150	DO7
92	1N4104	5	10	25	25m	200		200J	DO7
93	1N4697	5	10	25	.05m			200A	DO14
94#	1S335	6 0	10	25	5 0m	25	7 0	150J	A1ce
95#	02Z10A	5	10	250m	6 0m	35	7 0	175J	DO35
96#	1110	10Ø	10	25	10m	8 0	6 0	150J	C18f
97#	BZY83C10	5	10	25	5 0m	15	8 △	150J	C1g
98#	BZY83D10	10	10	25	5 0m	15	8 △	150J	C1g
99#	BZY85C10	5	10	25 §	5 0m	15	8 △	150J	A171f
100	GLA100,A,B	xxx	10	25	1 0m	75	7 1	175	DO7
101#	HS2100	5	10	25	5 0m			175A	DO7
102#	KS2100A	5	10	250m	5 0m	25	8 0 △	150A	DO7
103#	KS2100B	10	10	250m	5 0m	40	8 0 △	150A	DO7
104	LAC2010	10	10	250m	1 0m	100			M520a
105	MGLA100,A,B	xxx	10	25	1 0m	75	7 1	150	A2
106#	MR100C-H	5	10	25	5 0m	30		250	DO7
107#	MZ10A	10	10	25	10m	10	5 0	150A	DO7
108#	MZ1010	6	10	250m	10m	20	6 8	175J	DO7
109	PD6014,A	xx	10	.25	5.0m	10		150	A109
110	PD6055	5	10	.25	5 0m	8.0		150	A2c
111	PD6210	10	10	250m	1 0m	100			A109
112	SV133	5	10	.25	5 0m	50	6.0	150	DO7
113#	SZ10	6	10	25	5.0m	25	80	150J	C1f
114	MC6014,A	xx	10	30	10m	21		175	A2m
115#	Z1A10	1	10	320m	5.0m	15	8.0 △	150A	C29
116#	Z1B10	5	10	320m	5.0m	15	8 0 △	150A	C29
117#	Z1C10	10	10	320m	5.0m	15	8 0 △	150A	C29
118#	Z1D10	15	10	320m	5 0m	15	8 0 △	150A	C29
119	1N701	5	10	.40	10m	9 0	5 5	200S	A31b
120#	1N758	10	10	400m	20m	17	6 0	175A	A1
121#	1N758A	5	10	400m	20m	17	6 0	175A	A1
122	JAN1N758A	5	10	400m	20m	7 0	7 5	175A	A1dd
123	1N961,A,B	xxx	10	.40	13m	8 5	5.5	175S	DO7
124	1N3518	5	10	.40	10m	7 0	6 0	200A	DO7
125	JAN1N4104	5	10	400m	250u	200	8 0	175A	A1sx
126	1N4295,A	2,1	10	40	10m	20	1 2 △	175S	A31e
127	1N5530	20	10	400m§	1.0m			175A	DO7
128	1N5530A	10	10	400m§	1 0m			175A	DO7
129	1N5530B	5	10	400m§	1 0m	60		175A	DO7
130▼	JAN1N5530B	5	10	400m	1 0m	60	7 5	200A	DO14
131	1N5530C	2	10	400m§	1 0m	60		175A	DO7
132	1N5530D	1	10	400m§	1.0m	60		175A	DO7
133▼	1N5736B	5	10	400m	10m	20	7 0	200J	DO35
134#	1S195	6 0	10	40	10m	15	7 0	150J	A1ce
135#	1S2100	10	10	40	5 0m	40	6 5	150A	A1
136#	1S2100A	5	10	.40	5 0m	20	6 5	150A	A1
137#	1S7100,B	x15	10	40	5 0m	40	6 5	150A	A1
138#	1S7100A	5	10	400m	5.0m	20	6 5	150A	A1
139#	5520	5	10	40	5.0m	15	5 5	125A	A1ce
140#	BZX46C10	5	10	400m	12	8 5	6 5	175J	DO35
141#	BZX55C10	5	10	400m	5.0m	15	5 8	150J	DO35
142▼#	BZX71B10	2	10	400m§	5 0m	15		175J	DO35
143#	BZX71C10	5	10	400m§	5 0m	15		200S	A9m
144#	BZX74C10	5	10	400m	12m	100	6 1		A31e
145#	BZX79C10	5	10	400m	5 0m	20	70	200J	A257
146#	BZX83C10	5	10	400m	5 0m	15	6 0	150J	DO35
147▼#	BZY85B10	2	10	400m	5 0m	15	5 9	150J	DO7
148#	BZY85D10	10	10	400m	5 0m	17	5 9	150J	A1su
149#	BZY88C10	5	10	40	5 0m	25		175J	DO7
150#	BZY94C10	5	10	4 §	5 0m			150J	DO7
151	C4016	10	10	40	13m	8 5		175	A134a
152	C6016	10	10	400m	1.0m	25 Ø	6 0	175A	M371c
153	C6016A	5	10	400m	1 0m	25 Ø	6 0	175A	M371c
154	C6116	10	10	400m	1.0m	25	6 0	175A	M131a
155	C6116A	5	10	400m	1 0m	25	6 0	175A	M131a
156	CZA10D,10,5	xxx	10	40 Ø	250u	200	5.5	175J	M371
157	CZB10D,10,5	xxx	10	40 Ø	6 3m	11	5 5	175J	M371
158	CZC10D,10,5	xxx	10	400mØ	12	8 5	5 5	175J	M371
159	CZD010,-5	xx	10	40	10m	8 5		175	DO7
160	CZD10D,10,5	xxx	10	40 Ø	250u	200	5 5	175J	M451
161	CZE10D,10,5	xxx	10	400mØ	12m	8 5	5 5	175J	M451
162	CZF10D,10,5	xxx	10	40 Ø	250u	200	4 5	175J	M452
163	CZG10D,10,5	xxx	10	40 Ø	20m	17	6 2	175J	M452
164▼	HEP101-RT	20	10	400m	12	8 5			DO7
165	HM10,A,B	xxx	10	400m§	12m	8 5		175A	A196c
166#	HS7100	5	10	40	5 0m			175A	DO7
167#	KS100A	5	10	400m	5 0m	25	10 △	150A	DO7
168#	KS100B	10	10	40	5 0m	40	10 △	150A	DO7
169#	LR100CH	5	10	40	5 0m	30	5 9	150S	DO7
170	M4Z10,A,-20	xx*	10	40	12m	8 5		150A	A1kk
171#	M10Z	5 0	10	400m	5 0m	15	5 5	150A	DO7
172	MACZA10D,10,5	xxx	10	40 Ø	250u	200	5 5	175J	M453
173	MACZB10D,10,5	xxx	10	40 Ø	6 3m	11	5 5	175J	M453
174	MACZC10D,10,5	xxx	10	400mØ	12m	8 5	5 5	175J	M453
175	MACZD10D,10,5	xxx	10	40 Ø	250u	200	5 5	175J	M453
176	MACZE10D,10,5	xxx	10	400mØ	12m	8 5	5 5	175J	M453
177	MACZF10D,10,5	xxx	10	40 Ø	250u	200	4 5	175J	M453
178	MACZG10D,10,5	xxx	10	40 Ø	20m	17	6 2	175J	M453
179	MBCZA10D,10,5	xxx	10	40 Ø	250u	200	5 5	175J	M454
180	MBCZB10D,10,5	xxx	10	40 Ø	6 3m	11	5 5	175J	M454
181	MBCZC10D,10,5	xxx	10	400mØ	12m	8 5	5.5	175J	M454
182	MBCZD10D,10,5	xxx	10	40 Ø	250u	200	5 5	175J	M454
183	MBCZE10D,10,5	xxx	10	400mØ	12m	8 5	5 5	175J	M454
184	MBCZF10D,10,5	xxx	10	400mØ	250u	200	4 5	175J	M454
185	MBCZG10D,10,5	xxx	10	40 Ø	20m	17	6 2	175J	M454
186	MCCZA10D,10,5	xxx	10	40 Ø	250u	200	5 5	175J	M455
187	MCCZB10D,10,5	xxx	10	40 Ø	6 3m	11	5 5	175J	M455
188	MCCZC10D,10,5	xxx	10	400mØ	12m	8 5	5 5	175J	M455
189	MCCZD10D,10,5	xxx	10	40 Ø	250u	200	5 5	175J	M455
190	MCCZE10D,10,5	xxx	10	400mØ	12m	8 5	5 5	175J	M455

SYMBOLS AND CODES EXPLAINED IN INTERPRETER

2. SILICON REFERENCE DIODES

IN ORDER OF (1) REF. VOLTAGE, (2) DISSIPATION, and (3) TYPE No.

LINE No	3 TYPE No.	TOLERANCE 1 20 10 5 2 ± (%)	NOM. REF. VOLT. (V)	2 MAX. DISS. @ 25°C (W)	TEST CUR. Izt (A)	MAX. DYN IMP (Ω)	TEMP. COEFF Tc	MAX TEMP (°C)	DWG. No.
1	MCCZF10D,10,5								
		xxx	10	40 ∅	250u	200	4 5	175J	M455
2	MCCZG10D,10,5								
		xxx	10	40 ∅	20m	17	6 2	175J	M455
3	MDCZA10D,10,5								
		xxx	10	40 ∅	250u	200	5 5	150A	M410
4	MDCZB10D,10,5								
		xxx	10	40 ∅	6 3m	11	5 5	150A	M410
5	MDCZC10D,10,5								
		xxx	10	400m∅	12m	8 5	5 5	150A	M410
6	MDCZD10D,10,5								
		xxx	10	40 ∅	250u	200	5 5	150A	M410
7	MDCZE10D,10,5								
		xxx	10	400m∅	12m	8 5	5 5	150A	M410
8	MDCZF10D,10,5								
		xxx	10	40 ∅	250u	200	4 5	150A	M410
9	MDCZG10D,10,5								
		xxx	10	40 ∅	20m	17	6 2	150A	M410
10	MZ500-16	10	10	4 §	20m	20 ∅	7 5	175J	DO7
11	MZC10A10	†	10	400m§	5.0m	60	7 5 △	175J	M468
12	MZC10B10	§†	10	400m§	250u	200		175J	M468
13	WZ533	5	10	40	5 0m	15		150A	A31e
14#	Z5A10	1	10	400m§	5.0m	15	8 0 △	200J	A1hs
15#	Z5B10	5	10	400m§	5 0m	15	8.0 △	200J	A1hs
16#	Z5C10	10	10	400m§	5.0m	15	8 0 △	200J	A1hs
17#	Z5D10	15	10	400m§	5 0m	15	8 0 △	200J	A1hs
18#	ZF10	5	10	400m	5 0m	15	6 5	150J	DO7
19#	ZG10	10	10	400m	5 0m	15	6 5	150J	DO7
20#	ZP10#	5	10	400m	5 0m	15	6 5	150J	DO7
21	1/2Z10T5	5	10	50	13m	6 8		175	A94f
22	1N3402∅	10	10	50	10m	15	4 0	200A	P5
23	1N3415	10	10	50	1 0m	80	3.5	200A	P5
24	1N5240	20†	10	50	20m			200A	DO7
25	1N5240A,B	§∅	10	50	20m	7 0	7 5	200A	DO7
26#	DZ10A	10	10	50	20m	13	5 0	150A	A100
27▼	HEPZ0220-RT								.
		10	10	500m	20	62			C103
28	IDAZ3402,A,B,C∅								
		xxxx	10	500m	10m	15	4.0	200A	A1hc
29	MTZ614,A	xx	10	50	10m	21		175A	A60e
30	MZ92-10	†	10	500m§	20m		6 6	150J	C103
31	PS8913	5	10	50	20m	4 0	7 0	150	A60p
32	S5240,A,B	xxx	10	500m	20m	17	7 5	175	DO41
33#	ZSF10	1	10	500m	7 0m	10	1 0	150S	M487a
34#	Z0A10	1	10	520m	5 0m	8 0	8 0 △	150J	A1ef
35#	Z0B10	5	10	520m	5 0m	8 0	8 0 △	150J	A1ef
36#	Z0C10	10	10	520m	5 0m	8 0	8 0 △	150J	A1ef
37#	Z0D10	15	10	520m	5.0m	8 0	8 0 △	150J	A1ef
38	1N4632	5	10	60	13m	700	7 1	200A	DO14
39	LVA100A	5	10	600m	1 0m	100			DO14
40	LVA100B	2	10	600m	1 0m	100			DO14
41	LVA3100A	5	10	600m	1 0m	60			DO14
42	LVA3100B	2	10	600m	1 0m	60			DO14
43#	UZ10	10	10	60	60m	4 0	7 0	135A	DO3
44#	ZC010	5	10	60	1 0m	45	4 7	100	A3k
45#	ZD010	10	10	60	1 0m	45	4 7	100	A3k
46#	ZW10	5	10	600m	5 0m	15	6 5	150J	A1bg
47	ZZ10△	10	10	60	12m	7 0	5 0	175A	M222
48	7JZ10	†	10	750m	12m	8 5	5 5	175	DO15
49	7Z10,A,B,D								
		xxxx	10	750m	12m	8 5	5 5	175	DO27
50	7Z10C	∅	10	750m	12m	8 5	5 5	175	DO27
51	7ZM10,A,B,D								
		xxxx	10	750m	12m	8.5	5 5	175	DO41
52	7ZM10C	∅	10	750m	12m	8 5	5 5	175	DO41
53	1N1512,A	xx	10	.75	15m	3.2	7 0	200S	DO12
54	1N2036A	5	10	75	10m	50	6 0	150J	DO12
55	1N3679	20	10	750m§	13m	8 5		175S	A1az
56	1N3679A	10	10	750m§	13m	8 5		175S	A1az
57	1N3679B	5	10	750m§	13m	8 5		175S	A1az
58	MC6114,A	xx	10	75	25m	21		175A	A2d
59	MMZ10,A,-20								
		xx*	10	75	12m	8 5		150A	A1kk
60	MZ10T20,10,5								
		xxx	10	75	15m	4 8	7 0	165A	A152
61	SV1015	5	10	75	5 0m	50 ∅	6 0	150	A82f
62	WZ915	5	10	75	5 0m	50 ∅		150A	A1ep
63	1A10M,A,B	xxx	10	1 0	25m	7 0		75A	DO15
64	1E10Z,10,5	xxx	10	1 0	25m	7 0	5 5	150A	A52g
65	1M10Z,10,5	xxx	10	1 0	25m	7 0	5 5	175S	DO1
66	1N1523,A	xx	10	1 0	20m	4 0	7.0	200S	DO3
67	1N1744	5	10	1 0	20m	6 0 ∅	5 5	200A	A154
68	1N1771,A	xx	10	1 0	50m	3 5		175S	DO13
69	1N1876	10	10	1 0	25m	6 0	5 8	200C	A126
70	1N1876A	5	10	1 0	25m	6 0	5 8	200C	A126
71	1N1876B	1	10	1 0	25m	1 3 △	5 8	175A	DO13
72	1N3020	20	10	1 0	25m	7 0		175A	A31a
73	1N3020A	10	10	1 0	25m	7 0		175A	A31a
74	1N3020B	5	10	1 0	25m	7 0		175A	A31a
75	JAN1N3020B	5	10	1 0	25m	7 0	7 1	175A	A31c
76	1N4162	20	10	1 0	25m	7 0	5 5	175	DO29
77	1N4162A	10	10	1 0	25m	7 0	5 5	175	DO29
78	1N4162B	5	10	1 0	25m	7 0	5.5	175	DO29
79	1N4296,A	2,1	10	1 0	20m	10	1.2 △	175S	A31a
80	1N4327,A,B	xxx	10	1 0	25m	7 0	5 5	300S	DO7
81♦	1N4404	20	10	1 0	25m	3 0		175S	A266a
82	1N4404A	10	10	1 0	25m	3 0	5 5	175A	A1cm
83	1N4404B	5	10	1 0	25m	3.0	5 5	175A	A1cm
84	1N4661	5	10	1 0	25m	300	7.1	200A	DO15
85	1N4740	10	10	1 0	25m	7 0		200A	A1ay
86	1N4740A	5	10	1 0	25m	7 0		200A	A1ay
87	1N5563	20	10	1 0 §	25m			200A	A196d
88	1N5563A	10	10	1 0 §	25m	7 0		200A	A196d
89	1N5563B	5	10	1 0 §	25m	7 0		200A	A196d
90	1N5633		10	1 0	1 0m		7.3	175A	DO13
91	1N5633A		10	1 0	1 0m		7 3	175A	DO13
92	1R10,A,B	xxx	10	1 0	25m	7 0	5 5	175A	A52c
93#	1S3010	xx	10	1 0	20m	5.0	5 5	150	A3
94	1Z10,A,B	xxx	10	1 0	25m	7 0		150	A1ay
95	1Z10T20,10,5								
		xxx	10	1 0	20m	6.0	7 0	165A	A89c
96#	1ZC10T10,5	xx	10	1 0	20m	7 0	7 0	165A	A31p
97#	23Z6F,AF	12,6	10	1 0	10m	18	8 0	150J	DO13
98	AV4	10	10	1 0	50m	5 0		150A	A19
99	AV2010	2	10	1.0	50m	5.0		150A	A19
100▼#	BZ100△	5	10	1 0	30m	7 0	6 0	175J	A60t
101#	BZX29C10	5	10	1 0	20m	7 0	5 5	175J	A1cd
102#	BZX61C10	5	10	1 0	20m	8.5	5 0	175J	A3y
103♦	BZX85C10	5	10	1 0	25m	7 0	6 4	150A	DO15
104	CD31-00013	5	10	1 0	25m	7 0	6 2	200A	A1ce
105	CD31-12020	5	10	1 0	25m	7.0		200A	A1ce
106	CD32-12050	5	10	1 0	25m	7 0			
107	CZ10,A,B,D	xxxx	10	1 0	40m	14	5 5	175	DO15
108	CZ10C	∅	10	1 0	40m	14	5 5	175	DO15
109	EVR10,A,B	xxx	10	1.0	25m	15		175A	DO27
110#	EZ10A	10	10	1 0	40m	700	5 0		A1em
111#	FPZ10	5	10	1 0	25m	400	5 5		A31h
112	G10T20,10,5								
		xxx	10	1 0	25m	7 0	7 0	175A	DO15
113#	GZ10	5	10	1 0	25m	15 △		150A	S115
114	HW10,A,B	xxx	10	1 0	25m	7 0		175	A196
115	IDA1Z10,A,B,C∅								
		xxxx	10	1 0	25m			200A	A1ht
116	JZ10,A,B,D	xxxx	10	1 0	25m	7 0	5 5	175	DO15
117	JZ10C	∅	10	1 0	25m	7 0	5 5	175	DO15
118	LPM10,A,-20								
		xx*	10	1 0	25m	7 0		150A	A1kk
119	LPZT10∅	10	10	1 0	25m	6 0	3 7	185	A86
120	PS10020B	5	10	1 0	25m	7 0		175A	A60p
121	PS10064	5	10	1 0	25m	4.0	7 3	150	A60p
122	SZ10 0	xxxx	10	1 0	20m	6.0 ∅	5 5	150A	A3g
123	TC10A5A	5△∅	10	1 0	10m	20	05	175A	A1ss
124	TC10A50A	5△∅	10	1 0	10m	20	50	175A	A1ss
125	TZ10,A,B,D	xxxx	10	1 0	40m	14	5 5	175	DO27
126	TZ10C	∅	10	1 0	40m	14	5 5	175	DO27
127	UZ8710	5	10	1 0	25m	7 0	6 0	175	A146h
128	UZ8810	10	10	1.0	25m	7 0	6 0	175	A146h
129	VR10,A,B	xxx	10	1 0	25m	7 0		125A	A1b
130	Z2A100F	20§∅	10	1.0	20m	27	6 5	100J	A141
131#	Z4A10	1	10	1 0	50m	4.0	8 0 △	150J	A1ef
132#	Z4B10	5	10	1 0	50m	4 0	8 0 △	150J	A1ef
133#	Z4C10	10	10	1 0	50m	4 0	8 0 △	150J	A1ef
134#	Z4D10	15	10	1 0	50m	4 0	8 0 △	150J	A1ef
135	Z10,A,B,D	xxxx	10	1 0	25m	7.0	5.5	175	DO27
136	Z10C	∅	10	1.0	25m	7.0	5.5	175	DO27
137	ZA10,A,B	xxx	10	1 0	25m	7 0		150C	A1ew
138	ZB10#	†	10	1.0 §	25m	7.0		150A	A1bc
139	ZD10∅,A,B	xxx	10	1 0	25m	6 5	5 5	175A	A1cm
140#	ZEC10	20	10	1 0	20m	7 0	07	165A	DO3
141#	ZF10A	10	10	1 0	40m	6.5	5 0	150A	DO13
142	ZH10,A,B	xxx	10	1 0	25m	7 0	5 5	175A	DO1
143	ZM10,A,B,D	xxxx	10	1 0	25m	7.0	5 5	175	DO41
144	ZM10C	∅	10	1 0	25m	7 0	5 5	175	DO41
145#	7720	5	10	1 1	50m	7.0	5 5	125A	A1bu
146#	BZY92C10	5	10	1 1	50m	4 0	6.0	150J	DO13
147	1N4832,A,B	xxx	10	1 2	25m	9.0	7.1	175	DO29
148#	SZL10	6	10	1 3	50m	3 5		150J	M72
149#	ZD10#	5	10	1 3	50	4 0	6.0	150J	DO13
150	ZM10∅	10	10	1 3	50	4 0	6 0	150J	DO13
151#	ZU10	10	10	1 3	50	4 0	6 0	150J	A1bg
152#	ZY10	5	10	1 3	50	4 0	6 0	150J	A1bg
153▼	1N3789	20	10	1 5	37m	5 0	7 1	175S	C14∅
154▼	1N3789A	10	10	1 5	37m	5 0	7 1	175S	C14∅
155▼	1N3789B	5	10	1 5	37m	5 0	7 1	175S	C14∅
156	1N4465	5	10	1 5	25m	5 0		175A	A196
157	JAN1N4465	10	10	1 5	25m	5.0	7 1	175A	A1v
158	1S4010,A	xx	10	1 5	20m	2 3	5 5	150A	DO1
159	1.5DKZ10,A,B								
		xxx	10	1 5	37m	5 0		175A	DO27
160	1 5JZ10,A,B,D								
		xxxx	10	1 5	37m	5 0	7 1	175	DO15
161	1.5JZ10C	∅	10	1.5	37m	5 0	7 1	175	DO15
162	1 5R10,A,B	xxx	10	1 5	37m	5 0	5 5	175A	A52c
163	1 5Z10,A,B,D								
		xxxx	10	1.5	37m	5 0	7 1	175	DO27
164	1.5Z10C	∅	10	1.5	37m	5 0	7 1	175	DO27
165#	BZY95C10	5	10	1.5	50m	4.0	7.0	175J	DO1
166#	BZY96C10	5	10	1 5	50m	5.0	8 0	175J	DO1
167	MC6314,A	xx	10	1.5	100m	20			A1q
168	MZ1000-13	10	10	1.5 §	25m	11 ∅	7 5	175J	A1ay
169#	SZ10C	5	10	1 5	20m	20	6 0	160A	A26
170#	Z2A10	1	10	1.5	50m	4 0	8 0 △	150J	A244
171#	Z2B10	5	10	1.5	50m	4 0	8.0 △	150J	A244
172#	Z2C10	10	10	1.5	50m	4 0	8 0 △	150J	A244
173#	Z2D10	15	10	1.5	50m	4 0	8 0 △	150J	A244
174#	Z3A10	1	10	1.5	100m	3.0	8 0 △	150J	S4f
175#	Z3B10	5	10	1.5	100m	3 0	8 0 △	150J	S4f
176#	Z3B100CF	20§∅	10	1.5	20m	5 0	7.0	175J	DO1
177#	Z3C10	10	10	1.5	100m	3 0	8.0 △	150J	S4f
178#	Z3D10	15	10	1.5	100m	3 0	8 0 △	150J	S4f
179#	63Z6,A	12,6	10	1.8	100m	15	90	150J	DO4
180#	ZC2010	5	10	1.8	1 0m	45	4 7	150	DO3
181#	ZD2010	10	10	1.8	1 0m	45	4 7	150	DO3
182	2R10,A,B	xxx	10	2.0	50m	5 0	5.5	175A	DO27
183	2VR10,A,B	xxx	10	2.0	50m	5 0			A3e
184	LMZ10,A,-20								
		xx*	10	2.0	50m	3 5		150A	A1kk
185	ZBC10	†	10	2.0 §	50m	4 0		150A	A1bc
186#	VR10F	5	10	2.2	20m	5 0		200S	DO3
187	1N5020	10	10	2 5	62m	3.0	5 5	150	A1gn
188	1N5020A	5	10	2.5	62m	3 0	5 5	150	A1gn
189#	BZX70C10	5	10	2.5	50m	4 0	70	150J	A171b
190	1N5067	5	10	3.0	75m	4 0		175A	A146j
191	3R10,A,B	xxx	10	3 0	75m	4 0	5 5	175A	A1rw
192	3TZ10,A,B,D								
		xxxx	10	3.0	100m	3 0	7 0	175	A1ec
193	3TZ10C	∅	10	3.0	100m	3 0	7 0	175	A1ec
194	3VR10,A,B	xxx	10	3.0	75m	4 0			A222
195	CZ5067	10	10	3.0	75m	4 0	60	175A	A196e

SYMBOLS AND CODES EXPLAINED IN INTERPRETER

2. SILICON REFERENCE DIODES

IN ORDER OF (1) REF. VOLTAGE, (2) DISSIPATION, and (3) TYPE No.

LINE No	3 TYPE No	TOLERANCE 1 20 10 5 2 ± (%)	NOM. REF. VOLT. (V)	2 MAX. DISS. @ 25°C (W)	TEST CUR. Izt (A)	MAX. DYN. IMP. (Ω)	TEMP. COEFF Tc	MAX. TEMP (°C)	DWG. No.
1#	FDZ10A	10	10	3 0 ∅	120m	2 1	5.0	150A	S303
2	M3Z10,A	xx	10	3 0	75m	4 3		150A	A1kk
3	MZ710	5	10	3 0	75m	4 0	6.0	175A	A146j
4	MZ810∅	10	10	3 0	75m	4 0	6 0	175A	A146j
5	MZ910	20	10	3 0	75m	4 0	6 0	175A	A146j
6#	NT3C10	5	10	3 0	5 0m	40		125J	S43a
7	UZ710	5	10	3 0	75m	4 0	6 0	175A	A60
8	UZ810	10	10	3 0	75m	4 0	6 0	175A	A146f
9	UZ910	20	10	3 0	75m	4 0	6 0	175A	A60
10	ZAC10,A,B	xxx	10	3 0	25m	7 0		150C	A1ey
11	ZCC10	†	10	3 0 §	75m	4 0		150A	A1ey
12	1N1593,A	xx	10	3 5	70m	2 5	7 0	200S	DO4
13	3Z10T20,10,5	xxx	10	3 5	70m	3 8	7 0	165	DO4
14#	4GZ10A	10	10	4 0	250m	250	5 5		S19q
15	1N4018,A,B	xxx	10	5 0	125m	2 0	7 1	180A	S82
16	1N4958	5	10	5.0	125m	2 0		175A	A146m
17	JAN1N4958	5	10	5 0	125m	2 0	7 0	175A	A248f
18♦	1N5347	20	10	5 0	125m			200A	A1ee
19▼	1N5347A	10	10	5 0	125m	2 0		200A	A1ee
20▼	1N5347B	5	10	5 0	125m	2 0		200A	A1ee
21▼	5ZS10,A,B	xxx	10	5 0 §	125m	2 0		200A	A1ts
22#	1310	10∅	10	5 0	60m	3.0	6 0	150J	A9h
23▼	CTZC10,A,B,D∅	xxxx	10	5 0 §	125m	2 0 ∅	5 5	175A	A1ey
24▼	CTZC10C∅	1	10	5 0 §	125m	2 0 ∅	5.5	175A	A1ey
25▼	CTZC10E∅	3	10	5 0 §	125m	2 0 ∅	5.5	175A	A1ey
26	DSZ5710	5	10	5 0	125m	2 0	7 0	175A	A60r
27	DSZ5810	10	10	5 0	125m	2 0	7 0	175A	A60r
28	MZ5710	5	10	5 0	125m	2 0	6.0		A60f
29	MZ5810	10	10	5 0	125m	2 0	6 0		A60f
30	MZ5910	20	10	5 0	125m	2 0	6 0		A60f
31▼	TZC10,A,B,D	xxxx	10	5 0 §	125m	2 0 ∅	5 5	175A	A1ey
32▼	TZC10C	1	10	5 0 §	125m	2 0 ∅	5 5	175A	A1ey
33▼	TZC10E	3	10	5.0 §	125m	2 0 ∅	5 5	175A	A1ey
34▼	UZ5710	5	10	5 0	125m	2 0	7 0	175A	A146m
35♦	UZ5810	10	10	5 0	125m	2 0	7 0	175A	A146m
36	UZ5910	20	10	5 0	125m	2 0 ∅	6 0	175A	A146m
37	ZC10	†	10	5 0 §	125m	2 0		150A	A1ey
38#	VR10E	5	10	5 8	20m	5 0		200S	DO4
39	UZ4710	5	10	8 0	125m	2 0		175A	A146m
40	UZ4810	10	10	8 0	125m	2 0		175A	A146m
41	1N1351,A	xx	10	10	500m	2 0		175A	DO4
42	1N1351B	20	10	10	500m	2 0			S11e
43	1N1351C,CA∅	xx	10	10 §	50	2 0		175J	S19a
44	1N1604,A	xx	10	10	200m	1 0	7.0	200S	DO4
45	1N1892	10	10	10	25m	6 0	5 8	200A	S82
46	1N1892A	5	10	10	25m	6 0	5.8	200A	S82
47	1N2045-1	5	10	10	500m	1 5	6 0	150J	DO4
48	1N2045A	5	10	10	500m	1 5		150A	S19a
49	1N2498	10	10	10	500m	2 0	6.0	150A	S19a
50	1N2498A	5	10	10	500m	2 0	6 0	150A	S19a
51	1N2498C,CA∅	xx	10	10	500m	2 0	6 0	150A	S19a
52	1N2974,A,B	xxx	10	10	250m	3 0		175C	DO4∅
53	JAN1N2974B,RB	5	10	10	250m	3 0	7.1	150C	DO4
54	1N4262	20	10	10	250m	3 0	5.5	175C	S134
55	1N4262A	10	10	10	250m	3 0	5.5	175C	S134
56	1N4262B	5	10	10	250m	3 0	5.5	175C	S134
57	JAN1N4262B	5	10	10 §	250m	3 0	7.1	175S	S134a
58#	1S6010	10	10	10	200m	2 5	5.0	150	DO4
59#	1S6010A	5	10	10	200m	2 5	5.0	150	DO4
60	10PZ10,A,B,D	xxxx	10	10	250m	3 0	5.5	175	DO4
61	10PZ10C	∅	10	10	250m	3 0	5 5	175	DO4
62	10RZ10,A,B,D	xxxx	10	10	500m	2 0	6 0	155	DO4
63	10RZ10C	∅	10	10	500m	2 0	6 0	155	DO4
64	10Z10T20,10,5	xxx	10	10	200m	1 5	7.0	165	DO4
65	AV104	10	10	10	500m	2.0		150A	S11
66	AV8010	∅2	10	10	500m	2 0		150A	S11
67#	BZZ20	5	10	10	100m	5 0	3.5	150J	DO4
68#	GZ10A	10	10	10 ∅	200m	1 3	5.0	150A	DO4
69#	OAZ228	5	10	10	20m	17		150J	DO4
70#	PZ10A	10	10	10 ∅	200m	1 3	5.0	150A	S95a
71	PZT10∅	10	10	10 ∅	25m	6 0	3.7	185	S82
72	UZ7710	5	10	10	250m	1 0	6.0	175	S277∅
73	UZ7810	10	10	10	250m	1 0	6 0	175	S277∅
74	UZ7910	20	10	10	250m	1 0	6 0	175	S277∅
75#	Z5D100CF	20§∅	10	10	50m	2 5	6 0	150J	DO4
76#	ZC5010	5	10	10	200m	2 5	4.5	150A	S19
77#	ZD5010	10	10	10	200m	2 5	4.5	150A	S19
78#	1210	10∅	10	15	300m	50	6.0	150J	S87
79#	4220	10∅	10	15	300m	1 0 △		150J	S87
80#	BZY93C10	5	10	20 §	1	50	7 0	175J	DO4∅
81#	83Z6,A	12,6	10	25	400m	3 0	7.0	150J	S179
82#	ZL10	10	10	25 ∅	50	4 0	6.0	150J	M41
83#	ZX10	5	10	25 ∅	50	4.0	6 0	150J	M41
84	75TE10,A	xx	10	30	1 0	5.0m	10	125C	TO36
85#	4320	10∅	10	30	300m	1 0		150J	S87
86#	4420	10∅	10	30	300m	1 0		150J	S87
87	1N2808,A,B	xxx	10	50	1 2	60	5.5	175S	C5a
88	JAN1N2808B,RB	5	10	50	1 2	60	7.1	150C	C5a
89	1N3309	20	10	50	1.2	600m	5.5	175J	DO5
90	1N3309A	10	10	50	1 2	600m	5.5	175J	DO5
91	1N3309B	5	10	50	1 2	600m	5.5	175J	DO5
92	JAN1N3309B,RB	5	10	50	1 2	60	7 1	150	DO5
93	50T10,A,B	xx*	10	50	1.2k	600m	5 5		
94	AV51010	5	10	50	1 2	.60	5.5	150C	C5a
95#	BZY91C10	5	10	75 §	2	40	9 0	175J	DO5∅
96	80TF10,A	xx	10	80	1 0	5 0m	1 0	125C	M117c
97#	4520	10∅	10	100	500m	50		150J	S84
98#	4620	10∅	10	100	500m	.50 △		150J	S84
99#	ZC710△	5	10	100 §	100	2.0	5.4	175J	S125d∅
100	250ZE10	10	10	250 §	15		8 0	190A	S83
101	250ZF10	10	10	250 §	15		8.0	190A	M56a
102	LID10,A	xx	10	400	12m	9 1		150A	M401
103▼	BLVA1101	2.0	10.1	250m	250u	500	4 2	150A	A9n
104▼	BLVA4101	1.9	10.1	250m	250u	350	4 2	150A	A9n
105▼	BLVA1104	1 9	10 4	250m	250u	500	4 4	150A	A9n
106▼	BLVA4104	1 9	10 4	250m	250u	350	4 4	150A	A9n
107	1N226∅	10	10 5	150m	200u			150A	C1
108	1N226A∅	5	10.5	150m	200u			150A	C1
109	1N1314,A	xx	10 5	15	20m		6 0	150A	C1
110	IDAZ226,A,B,C∅	xxxx	10 5	150m	200u			150A	A1hc
111#	RD11A	10	10.5	20	5 0m	25	7 0	150S	A1dw
112#	1S759	xxx	10 5	.25	5 0m	20	50	150	C1d
113	CD3126	5	10.5	25	5.0m	50 ∅	7 5	150A	A1sj
114	1N2036	5	10 5	75	10m	50	6 0	150J	DO12
115#	RD11B	10	10 5	1 0	20m	6 0	7 0	150S	A164
116#	RD11C	10	10.5	3 0	60m	4 0	7 0	150S	S42
117	1N2045	5	10 5	10	500m	1 5	6.0	150J	DO4
118	1N2045C	5	10.5	10	500m	1 5		150A	S19a
119#	RD11D	10	10 5	10	200m	2.5	6 0	150S	S103
120	FZ903	10	10 6	10	2 0m	50	3.5	125A	C98
121	FZ953	10	10.6	10	2 0m	50	3.5	125A	C98a
122	1N2045B	5	11		500m	1 5		150A	S19a
123	DSZ3011	10	11		70m	5 0	6 0		A266
124#	RZ11	5	11	08	2.0m	80		150A	C18e
125#	RZZ11	5	11	08	5.0m	100		150A	C18e
126▼#	BZX84C11	5	11	110m	5 0m	30	727m	125J	M500
127#	AZ11∅	5	11	15	5 0m	30		170A	DO7
128#	Z11∅	5	11	150m	5.0m	55		150A	C18d
129#	ZZ11	5	11	15	5 0m	70		150A	C18d
130#	SZ200-11	15	11	20	5 0m	25	7.0	100A	A138
131	1/4A11,A,B	xxx	11	.25	5 7m	13	6 0	175	DO7
132	1/4M11Z,10,5	xxx	11	250m	5 7m	13	6.9	175J	A1cy
133	.25N11	20	11	25	5 7m	13		250	DO7
134	1N715,A	xx	11	25	12m	9 0	6 5	175A	DO7
135	1N715B	20	11	25	12m	9 0			DO7
136	1N765-2	5	11	.25	5 0m	45	6.0	150	DO7
137	1N4105	5	11	25	25m	200		200J	DO7
138	1N4698	5	11	25	05m			200A	DO14
139#	1S336	5 0	11	.25	5 0m	25	7 0	150J	A1ce
140#	1S473	10	11	25	15m	20	6.5	150J	DO7
141#	02Z11A	5	11	250m	6.0m	40	7.4	175J	DO35
142#	1111	10∅	11	25	5.0m	30	7.0	150J	C18f
143#	BZY83C11	5	11	.25	5 0m	20	8 △	150J	C1g
144#	BZY85C11	5	11	.25 §	5 0m	20	8 △	150J	A171f
145	HR11	5	11	.25	5 0m	30		175A	DO7
146#	HS2110	5	11	.25	5.0m			175A	DO7
147#	KS2110A	5	11	250m	5 0m	40	8 0 △	150A	DO7
148#	KS2110B	10	11	250m	5.0m	60	8 0 △	150A	DO7
149#	MR110C-H	5	11	.25	5.0m	30		250	DO7
150	PD6015,A	xx	11	25	5 0m	12		150	A109
151	PD6056	5	11	.25	5 0m	11		150	A2c
152	SV134	5	11	25	5 0m	50	6 3	150	DO7
153#	SZ11	6	11	25	5.0m	35	82	150J	C1f
154	MC6015,A	xx	11	30	10m	23		175	A2m
155#	Z1D11	∅∅§§	11	.3 §		20		150J	C29
156#	Z1A11	1	11	320m	5 0m	20	8 0 △	150A	C29
157#	Z1B11	5	11	320m	5.0m	20	8.0 △	150A	C29
158#	Z1C11	10	11	320m	5 0m	20	8 0 △	150A	C29
159	1N962,A,B	xxx	11	40	12m	9.5	6 0	175S	DO7
160	JAN1N962B	5	11	.40	11m	9 5	7.3	175A	DO7
161	1N3519	5	11	40	10m	8 0	6 5	200A	DO7
162	JAN1N4105	5	11	400m	250u	200	8 0	175A	A1sx
163	1N5531	20	11	400m§	1 0m			175A	DO7
164	1N5531A	10	11	400m§	1 0m			175A	DO7
165	1N5531B	5	11	400m§	1 0m	80		175A	DO7
166▼	JAN1N5531B	5	11	400m	1.0m	80	7 5	200A	DO14
167	1N5531C	2	11	400m§	1 0m	80		175A	DO7
168	1N5531D	1	11	400m§	1 0m	80		175A	DO7
169▼	1N5737B	5	11	400m	5.0m	20	7.2	200J	DO35
170#	1S196	5 0	11	40	10m	15	7 0	150J	A1ce
171#	1S2110	10	11	.40	5 0m	60	7 0	150A	A1
172#	1S2110A	5	11	.40	5 0m	40	7.0	150A	A1
173#	1S7110,B	x15	11	.40	5 0m	60	7 0	150A	A1
174#	1S7110A	5	11	.40	5.0m	40	7.0	150A	A1
175#	5521	5	11	40	5 0m	20	5 5	125A	A1ce
176#	BZX46C11	5	11	400m	11	9.5	6 5	175J	DO35
177#	BZX55C11	5	11	400m	5.0m	20	6 0	150J	DO35
178▼#	BZX71B11	2	11	400m§	5.0m	20		175J	DO35
179#	BZX71C11	5	11	400m§	5 0m	20		200S	A9m
180#	BZX74C11	5	11	400m	12m	100	6.3		A31e
181#	BZX79C11	5	11	400m	5 0m	20	80	200J	A257
182#	BZX83C11	5	11	400m	5.0m	20	6 0	150J	DO35
183▼#	BZY85B11	2	11	400m	5 0m	20	6 3	150J	DO7
184#	BZY88C11	5	11	.40	5 0m	35		175J	DO7
185#	BZY94C11	5	11	.40	5.0m	15 ∅		150J	DO7
186	C4017	10	11	.40	12m	9 5		175	A134a
187	C6017	10	11	400m	1.0m	30 ∅	6.3	175A	M371c
188	C6017A	5	11	400m	1 0m	30 ∅	6 3	175A	M371c
189	C6117	10	11	400m	1 0m	30	6.3	175A	M131a
190	C6117A	5	11	400m	1 0m	30	6 3	175A	M131a
191	CZA11D,10,5	xxx	11	40 ∅	250u	200	6 0	175J	M371
192	CZB11D,10,5	xxx	11	40 ∅	5 7m	13	6 0	175J	M371
193	CZC11D,10,5	xxx	11	400m∅	11	9.5	6.0	175J	M371
194	CZD011,-5	xx	11	.40	10m	9.5		175	DO7
195	CZD11D,10,5	xxx	11	.40 ∅	250u	200	6 0	175J	M451
196	CZE11D,10,5	xxx	11	400m∅	11m	9.5	6 0	175J	M451
197	HM11,A,B	xxx	11	400m§	11m	9 5		175A	A196c
198#	HS7110	5	11	.40	5.0m			175A	DO7
199#	KS110A	5	11	400m	5 0m	40	11 △	150A	DO7
200#	LR110CH	5	11	.40	5.0m	35	6.2	150S	DO7
201	M4Z11,A,-20	xx*	11	.40	11m	9 5		150A	A1kk

SYMBOLS AND CODES EXPLAINED IN INTERPRETER

2. SILICON REFERENCE DIODES

IN ORDER OF (1) REF. VOLTAGE, (2) DISSIPATION, and (3) TYPE No.

LINE No	3 TYPE No.	TOLERANCE 20 10 5 2 ± (%)	1 NOM. REF. VOLT. (V)	2 MAX. DISS. @ 25°C (W)	TEST CUR Izt (A)	MAX. DYN. IMP (Ω)	TEMP. COEFF Tc	MAX. TEMP (°C)	DWG. No.
1#	M11Z	5 0	11	400m	5 0m	20	6 0	150A	DO7
2	MACZA11D,10,5	xxx	11	40 ∅	250u	200	6 0	175J	M453
3	MACZB11D,10,5	xxx	11	40 ∅	5 7m	13	6 0	175J	M453
4	MACZC11D,10,5	xxx	11	400m∅	11m	9 5	6 0	175J	M453
5	MACZD11D,10,5	xxx	11	40 ∅	250u	200	6 0	175J	M453
6	MACZE11D,10,5	xxx	11	400m∅	11m	9 5	6.0	175J	M453
7	MBCZA11D,10,5	xxx	11	40 ∅	250u	200	6 0	175J	M454
8	MBCZB11D,10,5	xxx	11	40 ∅	5 7m	13	6 0	175J	M454
9	MBCZC11D,10,5	xxx	11	400m∅	11m	9 5	6 0	175J	M454
10	MBCZD11D,10,5	xxx	11	.40 ∅	250u	200	6 0	175J	M454
11	MBCZE11D,10,5	xxx	11	400m∅	11m	9 5	6 0	175J	M454
12	MCCZA11D,10,5	xxx	11	40 ∅	250u	200	6 0	175J	M455
13	MCCZB11D,10,5	xxx	11	40 ∅	5 7m	13	6 0	175J	M455
14	MCCZC11D,10,5	xxx	11	400m∅	11m	9 5	6 0	175J	M455
15	MCCZD11D,10,5	xxx	11	40 ∅	250u	200	6 0	175J	M455
16	MCCZE11D,10,5	xxx	11	400m∅	11m	9 5	6 0	175J	M455
17	MDCZA11D,10,5	xxx	11	40 ∅	250u	200	6.0	150A	M410
18	MDCZB11D,10,5	xxx	11	40 ∅	5 7m	13	6 0	150A	M410
19	MDCZC11D,10,5	xxx	11	400m∅	11m	9 5	6 0	150A	M410
20	MDCZD11D,10,5	xxx	11	40 ∅	250u	200	6 0	150A	M410
21	MDCZE11D,10,5	xxx	11	400m∅	11m	9 5	6 0	150A	M410
22	MZ500-17	10	11	4 §	20m	20 ∅	7 6	175J	DO7
23	MZC11A10	†	11	400m§	4 5m	66	7 6 △	175J	M468
24	MZC11B10	§†	11	400m§	250u	200		175J	M468
25	WZ534	5	11	.40	5 0m	15		150A	A31e
26#	Z5A11	1	11	400m§	5 0m	20	8 0 △	200J	A1hs
27#	Z5B11	5	11	400m§	5 0m	20	8 0 △	200J	A1hs
28#	Z5C11	10	11	400m§	5 0m	20	8 0 △	200J	A1hs
29#	Z5D11	15	11	400m§	5 0m	20	8 0 △	200J	A1hs
30#	ZF11	5	11	400m	5 0m	20	7 0	150J	DO7
31#	ZP11#	5	11	400m	5 0m	20	7 0	150J	DO7
32	1/2Z11T5	5	11	50	12m	7 6		175	A94f
33	1N5241	20†	11	50	20m			200A	DO7
34	1N5241A,B	§∅	11	50	20m	9 5	7 6	200A	DO7
35	MTZ615,A	xx	11	50	10m	23		175A	A60e
36	MZ92-11	†	11	500m§	20m		6 8	150J	C103
37	PS8914	5	11	50	20m	4 0	7 4	150	A60p
38	S5241,A,B	xxx	11	500m	20m	22	7.6	175	DO41
39#	Z0D11	15	11	50	40m	10	6 5	150J	A1ef
40#	ZSF11	1	11	500m	7 0m	10	1 0	150S	M487a
41#	Z0A11	1	11	520m	5 0m	10	8 0 △	150J	A1ef
42#	Z0B11	5	11	520m	5 0m	10	8 0 △	150J	A1ef
43#	Z0C11	10	11	520m	5 0m	10	8 0 △	150J	A1ef
44	1N4633	5	11	60	12m	700	7 3	200A	DO14
45#	UZ11	10	11	60	54m	5 0	7 0	135A	DO3
46#	ZC011	5	11	60	1 0m	45	5 1	100	A3k
47#	ZD011	10	11	60	1 0m	45	5 0	100	A3k
48#	ZW11	5	11	600m	5 0m	20	7 0	150J	A1bg
49	7JZ11	†	11	750m	11m	9 5	6 0	175	DO15
50	7Z11,A,B,D	xxxx	11	750m	11m	9 5	6.0	175	DO27
51	7Z11C	∅	11	750m	11m	9 5	6 0	175	DO27
52	7ZM11,A,B,D	xxxx	11	750m	11m	9.5	6 0	175	DO41
53	7ZM11C	∅	11	750m	11m	9 5	6 0	175	DO41
54	1N2036-2	5	11	75	10m	50	6 0	150J	DO12
55	1N3680	20	11	750m	12m	9 5	6 0	175S	A1az
56	1N3680A	10	11	750m	12m	9 5	6 0	175S	A1az
57	1N3680B	5	11	750m	12m	9 5	6 0	175S	A1az
58	MC6115,A	xx	11	75	25m	23		175A	A2d
59	MMZ11,A,-20	xx*	11	75	11m	9 5		150A	A1kk
60	MZ11T20,10,5	xxx	11	75	15m	7 5	7 0	165A	A152
61	SV1016	5	11	75	5.0m	50 ∅	6 3	150	A82f
62	1A11M,A,B	xxx	11	1 0	23m	8 0		75A	DO15
63	1E11Z,10,5	xxx	11	1 0	23m	8 0	6 0	150A	A52g
64	1M11Z,10,5	xxx	11	1 0	23m	8 0	6 0	175S	DO1
65	1N1772,A	xx	11	1 0	50m	4 2		175S	DO13
66	1N3021	20	11	1 0	23m	8 0		175A	A31a
67	1N3021A	10	11	1 0	23m	8 0		175A	A31a
68	1N3021B	5	11	1 0	23m	8 0		175A	A31a
69	JAN1N3021B	5	11	1 0	23m	8 0	7 3	175A	A31c
70	1N4163	20	11	1 0	23m	8 0	6.0	175	DO29
71	1N4163A	10	11	1 0	23m	8 0	6 0	175	DO29
72	1N4163B	5	11	1 0	23m	8 0	6 0	175	DO29
73	1N4328,A,B	xxx	11	1 0	23m	8 0	6 0	300S	DO7
74♦	1N4405	20	11	1 0	23m	3 5		175S	A266a
75	1N4405A	10	11	1 0	23m	3 5	6 0	175A	A1cm
76	1N4405B	5	11	1 0	23m	3 5	6 0	175A	A1cm
77	1N4662	5	11	1 0	23m	350	7 3	200A	DO15
78	1N4741	10	11	1 0	23m	8 0		200A	A1ay
79	1N4741A	5	11	1 0	23m	8 0		200A	A1ay
80	1N5564	20	11	1 0 §	23m			200A	A196d
81	1N5564A	10	11	1 0 §	23m	8 0		200A	A196d
82	1N5564B	5	11	1 0 §	23m	8 0		200A	A196d
83	1N5634		11	1 0	1.0m		7.5	175A	DO13
84	1N5634A		11	1 0	1 0m		7 5	175A	DO13
85	1R11,A,B	xxx	11	1 0	23m	8 0	6 0	175A	A52c
86#	1S226	10	11	1 0	25m	6 5		150J	A56a
87#	1S483	10	11	1 0	30m	20	6.5	150J	A115
88#	1S3011	xx	11	1 0	20m	6.0	6.0	150	A3
89	1Z11,A,B	xxx	11	1 0	23m	8 0		150	A1ay
90	1Z11T20,10,5	xxx	11	1 0	20m	7 5	7.0	165A	A89c
91#	1ZC11T10,5	xx	11	1 0	20m	8.0	7 0	165A	A31p
92#	24Z6F,AF	12,6	11	1 0	10m	18	8 0	150J	DO13
93	AV2011	∅2	11	1 0	50m	5 0		150A	A19
94♦#	BZ110	5	11	1 0	20m	8 0	6.5	175J	A60t
95#	BZX29C11	5	11	1 0	20m	8 0	6 0	175A	A1cd
96#	BZX61C11	5	11	1 0	20m	9 0	5 0	175J	A3y
97♦	BZX85C11	5	11	1 0	20m	8 0	6 8	150A	DO15
98	CD31-00014	5	11	1 0	23m	8 0	7 0	200A	A1ce
99	CD31-12021	5	11	1 0	23m	8 0		200A	A1ce
100	CD32-12051	5	11	1 0	23m	8 0			
101	CZ11,A,B,D	xxxx	11	1 0	40m	14	6.0	175	DO15
102	CZ11C	∅	11	1 0	40m	14	6.0	175	DO15
103	EVR11,A,B	xxx	11	1 0	23m			175A	DO27
104#	FPZ11	5	11	1 0	23m	400	6 0		A31h
105	G11T20,10,5	xxx	11	1.0	23m	8 0	7 5	175A	DO15
106#	GZ11	5	11	1 0	25m	20 △		150A	S115
107▼	HEP604-RT	5	11	1 0	23	8.0			DO41
108	HW11,A,B	xxx	11	1 0	23m	8.0		175	A196
109	JZ11,A,B,D	xxxx	11	1 0	23m	8 0	6.0	175	DO15
110	JZ11C	∅	11	1 0	23m	8 0	6 0	175	DO15
111	LPM11,A,-20	xx*	11	1 0	23m	8 0		150A	A1kk
112	PS10021B	5	11	1 0	23m	8 0		175A	A60p
113	PS10065	5	11	1 0	23m	6.0	7 5	150	A60p
114	SZ11.0	xxxx	11	1 0	20m	8 0 ∅	6 0	150A	A3g
115	TZ11,A,B,D	xxxx	11	1 0	40m	14	6.0	175	DO27
116	TZ11C	∅	11	1 0	40m	14	6 0	175	DO27
117	VR11,A,B	xxx	11	1 0	23m	8 0		125A	A1b
118#	Z2A110F	20§∅	11	1 0	20m	32	7 0	100J	A141
119#	Z4A11	1	11	1 0	50m	6 0	8 0 △	150J	A1ef
120#	Z4B11	5	11	1 0	50m	6 0	8 0 △	150J	A1ef
121#	Z4C11	10	11	1 0	50m	6 0	8.0 △	150J	A1ef
122#	Z4D11	15	11	1.0	50m	6 0	8 0 △	150J	A1ef
123	Z11,A,B,D	xxxx	11	1.0	23m	8 0	6 0	175	DO27
124	Z11C	∅	11	1 0	23m	8 0	6 0	175	DO27
125	ZA11,A,B	xxx	11	1.0	23m	8.0		150C	A1ew
126	ZB11#	†	11	1.0 §	23m	8 0		150A	A1bc
127	ZD11∅,A,B	xxx	11	1.0	23m	7 0	6.0	175A	A1cm
128	ZH11,A,B	xxx	11	1 0	23m	8 0	6 0	175A	DO1
129	ZM11,A,B,D	xxxx	11	1.0	23m	8 0	6 0	175	DO41
130	ZM11C	∅	11	1 0	23m	8 0	6 0	175	DO41
131#	7721	5	11	1 1	50m	7 0	5.5	125A	A1bu
132#	BZY92C11	5	11	1.1	50m	7 0	6 0	150J	DO13
133	1N4833,A,B	xxx	11	1.2	23m	10	7.3	175	DO29
134#	SZL11	6	11	1.3	50m	5 0		150J	M72
135#	ZD11#	5	11	1 3	50	7 0	6.0	150J	DO13
136#	ZY11	5	11	1 3	50	7 0	6 0	150J	A1bg
137▼	1N3790	20	11	1.5	34m	6.0	7.3	175S	C14∅
138▼	1N3790A	10	11	1 5	34m	6 0	7 3	175S	C14∅
139▼	1N3790B	5	11	1 5	34m	6.0	7 3	175S	C14∅
140	1N4466	5	11	1 5	23m	6 0		175A	A196
141	JAN1N4466	10	11	1 5	23m	6 0	7 3	175A	A1v
142#	1S4011,A	xx	11	1 5	20m	2 4	6 0	150A	DO1
143	1 5DKZ11,A,B	xxx	11	1.5	34m	6 0		175A	DO27
144	1 5JZ11,A,B,D	xxxx	11	1 5	34m	6 0	7.3	175	DO15
145	1 5JZ11C	∅	11	1 5	34m	6.0	7.3	175	DO15
146	1 5R11,A,B	xxx	11	1 5	35m	6 0	6 0	175A	A52c
147	1 5Z11,A,B,D	xxxx	11	1 5	34m	6 0	7.3	175	DO27
148	1 5Z11C	∅	11	1.5	34m	6.0	7.3	175	DO27
149#	BZY95C11	5	11	1 5	50m	4 5	7 5	175J	DO1
150	MC6315,A	xx	11	1 5	75m	21			A1q
151	MZ1000-14	10	11	1 5 §	23m	12 ∅	7 6	175J	A1ay
152#	SZ11C	5	11	1 5	20m	25	7 0	160A	A26
153#	Z2A11	1	11	1 5	50m	5 0	8 0 △	150J	A244
154#	Z2B11	5	11	1.5	50m	5.0	8 0 △	150J	A244
155#	Z2C11	10	11	1 5	50m	5 0	8.0 △	150J	A244
156#	Z2D11	∅∅§$	11	1 5		7 0		150J	A6b
157#	Z3A11	1	11	1 5	100m	3 0	8.0 △	150J	S4f
158#	Z3B11	5	11	1 5	100m	3 0	8.0 △	150J	S4f
159#	Z3B110CF	20§∅	11	1 5	20m	6.0	7 0	175J	DO1
160#	Z3C11	10	11	1 5	100m	3 0	8.0 △	150J	S4f
161#	Z3D11	∅∅§$	11	1 5	50m	6.0		150J	S4f
162#	64Z6,A	12,6	11	1 8	100m	15	.90	150J	DO4
163#	ZC2011	5	11	1 8	1 0m	45	5 1	150	DO3
164#	ZD2011	10	11	1 8	1.0m	42	5 1	150	DO3
165	2R11,A,B	xxx	11	2 0	45m	6.0	6 0	175A	DO27
166	2VR11,A,B	xxx	11	2 0	45m	6 0			A3e
167#	3004	4 5	11	2 0	14m	60	1 △	150J	M93
168#	3024	4.5	11	2 0	14m	60	1.0	150J	M93
169#	3104	4 5	11	2 0	14m	25	2 0	150J	M93
170#	3124	3	11	2 0	14m	30	.50	150	M93
171	LMZ11,A,-20	xx*	11	2 0	45m	4 0		150A	A1kk
172	ZBC11	†	11	2 0 §	46m	5 0		150A	A1bc
173#	VR11F	5	11	2 2	20m	6 0		200S	DO3
174	1N5021	10	11	2 5	57m	3 6	6 0	150	A1gn
175	1N5021A	5	11	2 5	57m	3 6	6 0	150	A1gn
176#	BZX70C11	5	11	2 5	50m	4 5	75	150J	A171b
177	1N5068	5	11	3 0	70m	5 0		175A	A146j
178#	1S493	10	11	3.0	120m	20	6.5	150J	S112
179	3R11,A,B	xxx	11	3 0	69m	5.0	6 0	175A	A1rw
180	3TZ11,A,B,D	xxxx	11	3 0	75m	5.0	7 0	175	A1ec
181	3TZ11C	∅	11	3.0	75m	5.0	7.0	175	A1ec
182	3VR11,A,B	xxx	11	3 0	69m	5 0			A222
183	CZ5068	10	11	3 0	70m	5 0	70	175A	A196e
184	M3Z11,A	xx	11	3.0	68m	4 7		150A	A1kk
185	MZ711	5	11	3.0	70m	5.0	7 0	175A	A146j
186	MZ811	10	11	3.0	70m	5.0	7 0	175A	A146j
187	MZ911	20	11	3 0	70m	5.0	7 0	175A	A146j
188#	NT3C11	5	11	3 0	5.0m	50		125J	S43a

SYMBOLS AND CODES EXPLAINED IN INTERPRETER

2. SILICON REFERENCE DIODES

IN ORDER OF (1) REF. VOLTAGE, (2) DISSIPATION, and (3) TYPE No.

LINE No.	3 TYPE No.	TOLERANCE 20 10 5 2 ± (%)	1 NOM. REF. VOLT. (V)	2 MAX. DISS. @ 25°C (W)	TEST CUR. Izt (A)	MAX. DYN. IMP. (Ω)	TEMP. COEFF Tc	MAX. TEMP (°C)	DWG. No.
1	ZAC11,A,B	xxx	11	3.0	23m	8.0		150C	A1ey
2	ZCC11	†	11	3.0 §	70m	5 0		150A	A1ey
3	3T11,A,B	xx*	11	3 5	50m	4 2			DO4
4	3Z11T20,10,5								
		xxx	11	3.5	70m	4.2	7 0	165	DO4
5	1N4019,A,B	xxx	11	5 0	115m	2.5	7 3	180A	S82
6	1N4959	5	11	5 0	120m	2 5		175A	A146m
7	JAN1N4959	5	11	5.0	125m	2 5	7.0	175A	A248f
8♦	1N5348	20	11	5.0	125m			200A	A1ee
9▼	1N5348A	10	11	5.0	125m	2.5		200A	A1ee
10▼	1N5348B	5	11	5 0	125m	2 5		200A	A1ee
11▼	5ZS11,A,B	xxx	11	5 0 §	125m	2 5		200A	A1ts
12#	1311	10∅	11	5 0	60m	4.0	7 0	150J	A9h
13▼	CTZC11,A,B,D∅								
		xxxx	11	5 0 §	125m	2 5 ∅	6 0	175A	A1ey
14▼	CTZC11C∅	1	11	5 0 §	125m	2 5 ∅	6 0	175A	A1ey
15▼	CTZC11E∅	3	11	5 0 §	125m	2 5 ∅	6.0	175A	A1ey
16▼	TZC11,A,B,D								
		xxxx	11	5 0 §	125m	2 5 ∅	6 0	175A	A1ey
17▼	TZC11C	1	11	5 0 §	125m	2 5 ∅	6 0	175A	A1ey
18▼	TZC11E	3	11	5 0 §	125m	2 5 ∅	6 0	175A	A1ey
19	ZC11	†	11	5 0 §	125m	2 5		150A	A1ey
20#	VR11E	5	11	5 8	20m	6 0		200S	DO4
21	1N1352,A	xx	11	10	500m	2 0		175A	DO4
22	1N1352B	20	11	10	500m	2 0			S11e
23	1N1352C,CA∅								
		xx	11	10 §	.50	2 0		175J	S19a
24	1N2045-2	5	11	10	500m	1 5	6 0	150J	DO4
25	1N2499	10	11	10	500m	2 0	6 0	150A	S19a
26	1N2499A	5	11	10	500m	2 0	6 0	150A	S19a
27	1N2499C,CA∅								
		xx	11	10	500m	2 0	6 0	150A	S19a
28	1N2975,A,B	xxx	11	10	230m	3 0		175C	DO4⧄
29	JAN1N2975B,RB								
		5	11	10	230m	3 0	7 3	150C	DO4
30	1N4263	20	11	10	230m	3 0	6 0	175C	S134
31	1N4263A	10	11	10	230m	3 0	6 0	175C	S134
32	1N4263B	5	11	10	230m	3 0	6 0	175C	S134
33	JAN1N4263B	5	11	10 §	230m	3 0	7 3	175S	S134a
34#	1S268	10	11	10	250m	3 0		150J	S19g
35#	1S6011	10	11	10	200m	2 5	5 0	150	DO4
36#	1S6011A	5	11	10	200m	2.5	5 0	150	DO4
37	10PZ11,A,B,D								
		xxxx	11	10	230m	3 0	6 0	175	DO4
38	10PZ11C	⧄	11	10	230m	3 0	6 0	175	DO4
39	10RZ11,A,B,D								
		xxxx	11	10	500m	2.0	6 0	155	DO4
40	10RZ11C	⧄	11	10	500m	2 0	6 0	155	DO4
41	10Z11T20,10,5								
		xxx	11	10	200m	2 2	7 0	165	DO4
42	AV8011	∅2	11	10	500m	2 0		150A	S11
43#	OAZ229	5	11	10	20m	23		150J	DO4
44#	Z5D110CF	20§∅	11	10	50m	2 5	6 0	150J	DO4
45#	ZC5011	5	11	10	200m	2 5	5 0	150A	S19
46#	ZD5011	10	11	10	200m	2 5	5 0	150A	S19
47#	BZZ21	5	11	13	20m	4 4	7 5	150	DO4
48#	1211	10∅	11	15	300m	1.0	7 0	150J	S87
49#	4221	10∅	11	15	300m	1.0		150J	S87
50#	BZY93C11	5	11	20 §	1	1.0	7.5	175J	DO4⧄
51#	84Z6,A	12,6	11	25	400m	3 6	7 0	150J	S179
52#	ZX11	5	11	25 ⧄	50	7 0	6 0	150J	M41
53#	4321	10∅	11	30	300m	1 0		150J	S87
54#	4421	10∅	11	30	300m	1 0		150J	S87
55	1N2809,A,B	xxx	11	50	1 1	80	6 0	175S	C5a
56	JAN1N2809B,RB								
		5	11	50	1 1	80	7 3	150C	C5a
57	1N3310	20	11	50	1 1	800m	6 0	175J	DO5
58	1N3310A	10	11	50	1 1	800m	6 0	175J	DO5
59	1N3310B	5	11	50	1 1	800m	6 0	175J	DO5
60	JAN1N3310B,RB								
		5	11	50	1 1	80	7 3	150	DO5
61	50T11,A,B	xx*	11	50	1.1k	800m	6 0		S19e
62	AV51011	5	11	50	1 1	.80	6 0	150C	C5a
63#	BZY91C11	5	11	75 §	2	40	9.0	175J	DO5⧄
64#	4521	10∅	11	100	420m	.60		150J	S87
65#	4621	10∅	11	100	420m	.60		150J	S87
66#	ZC711△	5	11	100 §	100	2 0	5 5	175J	S125d⧄
67	LID11,A	xx	11	400	11m	10		150A	M401
68#	ZS11	⧄∅§	11.2		5.0m	120	500m	150A	C3c
69#	ZSA11	⧄∅§	11 2		5 0m	120	500m	150A	A1hs
70	1N4299	5	11 3	10	150m	1 6	1 0	75B	DO4
71	1N4299A	5	11 3	10	150m	1 6	1 0	100B	DO4
72	1N4299B	5	11 3	10	150	1 6	1.0	150B	DO4
73	1N4300	5	11.3	10	150	1 6	.50	75B	DO4
74	1N4300A	5	11 3	10	150m	1 6	50	100B	DO4
75	1N4300B	5	11 3	10	150m	1 6	50	150B	DO4
76	1N4303	5	11 3	50	750m	80	1 0	75B	DO5
77	1N4303A	5	11 3	50	750m	80	1 0	100B	DO5
78	1N4303B	5	11 3	50	750m	80	1 0	150B	DO5
79	1N4304	5	11 3	50	750m	80	50	75B	DO5
80	1N4304A	5	11 3	50	750m	80	50	100B	DO5
81	1N4304B	5	11 3	50	750m	80	50	150B	DO5
82	FA8005	5	11 4		10m	25	05	100	A1gd
83	FA8006	5	11 4		10m	25	.10	100	A1gd
84	FA8007	5	11.4		10m	25	20	100	A1gd
85	FA8008	5	11 4		10m	25	50	100	A1gd
86	WZ916	5	11 5	75	5 0m	50 ∅		150A	A1ep
87	1N946	5	11.6	50	7 5m	30	02	75	DO7
88	1N946A	5	11 6	50	7.5m	30	02	100	DO7
89	1N946B	5	11 6	50	7.5m	30	02	150	DO7
90	SVM111	5	11 7	.25	7 5m	10	1 0	100R	DO7
91	SVM1105	5	11 7	25	7 5m	75	50	100R	DO7
92	SVM11020	5	11 7	.25	7 5m	75	20	100R	DO7
93	SVM11021	5	11 7	25	7 5m	30	20	100R	DO7
94	ME1Z941	5	11.7	400m	7.5m	30	1.0	75J	M489
95	ME1Z941A	5	11 7	400m	7 5m	30	1 0	100J	M489
96	ME1Z941B	5	11 7	400m	7 5m	30	1 0	150J	M489
97	ME1Z942	5	11 7	400m	7 5m	30	500m	75J	M489
98	ME1Z942A	5	11 7	400m	7 5m	30	500m	100J	M489
99	ME1Z942B	5	11 7	400m	7 5m	30	500m	150J	M489
100	ME1Z943	5	11 7	400m	7 5m	30	200m	75J	M489
101	ME1Z943A	5	11.7	400m	7 5m	30	200m	100J	M489
102	ME1Z943B	5	11.7	400m	7.5m	30	200m	150J	M489
103	ME1Z944	5	11 7	400m	7 5m	30	100m	75J	M489
104	ME1Z944A	5	11 7	400m	7 5m	30	100m	100J	M489
105	ME1Z944B	5	11 7	400m	7.5m	30	100m	150J	M489
106	ME1Z945	5	11 7	400m	7 5m	30	50m	75J	M489
107	ME1Z945A	5	11.7	400m	7.5m	30	50m	100J	M489
108	ME1Z945B	5	11 7	400m	7 5m	30	50m	150J	M489
109	ME1Z946	5	11 7	400m	7 5m	30	20m	75J	M489
110	ME1Z946A	5	11 7	400m	7.5m	30	20m	100J	M489
111	ME1Z946B	5	11 7	400m	7 5m	30	20m	150J	M489
112	1N941	5	11 7	50	7 5m	30	1 0	175	DO7
113	1N941A	5	11 7	.50	7 5m	30	1 0	175	DO7
114	1N941B	5	11 7	50	7.5m	30	1 0	175	DO7
115	JAN1N941B	5	11 7	50	7.5m	30	2 △	175A	DO7
116	1N942	5	11 7	50	7 5m	30	50	175	DO7
117	1N942A	5	11 7	50	7 5m	30	50	175	DO7
118	1N942B	5	11 7	50	7 5m	30	50	175	DO7
119	1N943	5	11 7	50	7 5m	30	20	175	DO7
120	1N943A	5	11 7	50	7 5m	30	20	175	DO7
121	1N943B	5	11.7	50	7 5m	30	20	175	DO7
122	JAN1N943B	5	11 7	50	7 5m	30	4 △	175A	DO7
123	1N944	5	11 7	50	7.5m	30	10	175	DO7
124	1N944A	5	11 7	50	7 5m	30	10	175	DO7
125	1N944B	5	11 7	.50	7 5m	30	.10	175	DO7
126	JAN1N944B	5	11 7	50	7 5m	30	2 △	175A	DO7
127	1N945	5	11 7	50	7 5m	30	05	175	DO7
128	1N945A	5	11.7	50	7 5m	30	05	175	DO7
129	1N945B	5	11 7	50	7 5m	30	05	175	DO7
130	JAN1N945B	5	11 7	50	7 5m	30	1 △	175A	DO7
131	SVC1125	5	11 7	50	7 5m	30	10	175	DO7
132	SVC1150	5	11 7	50	7 5m	30	10	175	DO7
133	1N3580	5	11 7	75	7 5m	25	1 0	175	A31a
134	1N3580A	5	11 7	75	7.5m	25	1 0	175	A31a
135	1N3580B	5	11.7	75	7 5m	25	1 0	175	A31a
136	1N3581	5	11 7	75	7 5m	25	50	175	A31a
137	1N3581A	5	11 7	75	7 5m	25	50	175	A31a
138	1N3581B	5	11 7	75	7 5m	25	50	175	A31a
139	1N3582	5	11 7	75	7 5m	25	20	175	A31a
140	1N3582A	5	11 7	75	7 5m	25	20	175	A31a
141	1N3582B	5	11 7	75	7 5m	25	20	175	A31a
142	1N3583	5	11 7	75	7 5m	25	10	75	A31a
143	1N3583A	5	11 7	75	7 5m	25	10	100	A31a
144	1N3583B	5	11 7	75	7 5m	25	10	150	A31a
145	1N3584	5	11 7	75	7 5m	25	05	75	A31a
146	1N3584A	5	11 7	75	7 5m	25	05	100	A31a
147	1N3584B	5	11 7	.75	7 5m	25	05	150	A31a
148	1N2046A	5	12		500m	2 0		150A	S19a
149#	BZY84D12	10	12		50m	7 0	8 0		M72
150	DSZ3012	10	12		65m	5.0	7 0		A266
151	MC73	x	12		10m	24			M409b
152#	RZ12△	5	12	80m	2 0m	90		150A	C18e
153#	RZZ12	5	12	08	5 0m	110		150A	C18e
154▼#	BZX84C12	5	12	110m	5 0m	30	750m	125J	M500
155	1N1987	10	12	150m	1 0m	30	8 0	150	C1
156	1N1987A	5	12	150m	1 0m	30	8 0	150	C1
157	1N1987B	1	12	150m	1 0m	30	8 0	150	C1
158#	AZ12⧄	5	12	15	5 0m	35		170A	DO7
159	USA55191/3-2								
		5	12	15	10m	10	08	125A	M273
160#	Z12⧄	5	12	150m	5 0m	60		150A	C18d
161#	ZZ12⧄	5	12	15	5 0m	80		150A	C18d
162	1N1933	10	12	200m	1.0m	30	8 0	150A	A82e
163	1N1933A	5	12	200m	1 0m	30	8.0	150A	A82e
164	1N1933B	1	12	200m	1 0m	30	8 0	150A	A82e
165#	RZ12A	10	12	20	330m	1 8	5 7	125A	DO5
166#	ZS12	2	12	200m	5 0m	100		140A	C74
167#	OAZ273	20	12	23	1 0m	21		150J	A3
168	1/4A12,A,B	xxx	12	25	5 2m	15	6 5	175	DO7
169	1/4M12Z,10,5								
		xxx	12	250m	5 2m	15	7 0	175J	A1cy
170	25N12	20	12	25	5 2m	15		250	DO7
171	1N716,A	xx	12	250m	12m	10	6 8	175A	DO7
172	1N716B	20	12	25	12m	10			DO7
173	1N766-1	5	12	25	5.0m	55	7.0	150	DO7
174	1N4106	5	12	25	25m	200		200J	DO7
175	1N4699	5	12	.25	05m			200A	DO14
176#	1S337	5 0	12	25	5 0m	35	7 0	150J	A1ce
177#	02Z12A	5	12	250m	5 0m	50	7.7	175J	DO35
178#	1112	10∅	12	25	5 0m	30	7 0	150J	C18f
179#	BZY83C12	5	12	25	5 0m	30	9 △	150J	C1g
180#	BZY83D12	10	12	25	5 0m	30	9 △	150J	C1g
181#	BZY85C12	5	12	.25 §	5 0m	20	9 △	150J	A171f
182	CD4116	5	12	25	10m	60	20	125A	A1cj
183	CD4117	5	12	.25	10m	60	50	125A	A1cj
184	CD4118	5	12	25	10m	60	1 0	125A	A1cj
185	CD4121	5	12	25	10m	60	05	125A	A1ce
186	CD4122	5	12	25	10m	60	10	125A	
187#	HS2120	5	12	25	5 0m			175A	DO7
188#	KS2120A	5	12	250m	5 0m	60	8 0 △	150A	DO7
189#	KS2120B	10	12	250m	5 0m	75	8 0 △	150A	DO7
190	MCPD537A	10	12	.25	10m	24		150A	M411
191#	MR120C-H	5	12	.25	5.0m	30		250	DO7
192#	MZ12A	10	12	25	8 2m	15	5 7	150A	DO7
193#	MZ1012	9	12	250m	50m	30	7 5	175J	DO7
194	PD6016,A	xx	12	25	5 0m	15		150	A109
195	PD6057	5	12	25	5 0m	12		150	A2c
196	SV135	5	12	25	5 0m	50	6 6	150	DO7
197#	SZ12	5	12	25	5 0m	40	83	150J	C1f
198#	BZY69	15	12	28	1 0m	21		150J	A3
199	MC6016,A	xx	12	.30	10m	24		175	A2m
200	OAZ213	15	12	30	1 0m	21 ∅	7.7	150J	C1c
201#	Z1A12	1	12	320m	5 0m	20	8 0 △	150A	C29
202#	Z1B12	5	12	320m	5.0m	20	8.0 △	150A	C29
203#	Z1C12	10	12	320m	5 0m	20	8 0 △	150A	C29
204#	Z1D12	15	12	320m	5 0m	20	8 0 △	150A	C29
205	1N665§	5	12	.40	10m	10	6 0	200S	A31b
206#	1N759	10	12	400m	20m	30	6 0	175A	A1
207#	1N759A	5	12	400m	20m	30	6 0	175A	A1

SYMBOLS AND CODES EXPLAINED IN INTERPRETER

2. SILICON REFERENCE DIODES

IN ORDER OF (1) REF. VOLTAGE, (2) DISSIPATION, and (3) TYPE No.

LINE No	3 TYPE No	TOLERANCE 1 20 10 5 2 ± (%)	NOM. REF. VOLT. (V)	2 MAX. DISS @ 25°C (W)	TEST CUR Izt (A)	MAX. DYN. IMP. (Ω)	TEMP COEFF Tc	MAX. TEMP (°C)	DWG. No.
1	JAN1N759A	5	12	400m	20m	10	8.0	175A	A1dd
2	1N963,A,B	xxx	12	400m	11m	11	6 5	175S	DO7
3	JAN1N963B	5	12	400m	10m	11	7 6	175A	DO7
4	1N1960,A,B	xx1	12	40	1.0m	30	8 0	150	DO7
5	1N3520	5	12	40	10m	10	7.0	200A	DO7
6	JAN1N4106	5	12	400m	250u	200	8.0	175A	A1sx
7	1N5532	20	12	400m§	1 0m			175A	DO7
8	1N5532A	10	12	400m§	1.0m			175A	DO7
9	1N5532B	5	12	400m§	1 0m	90		175A	DO7
10▼	JAN1N5532B	5	12	400m	1.0m	90	8 0	200A	DO14
11	1N5532C	2	12	400m§	1.0m	90		175A	DO7
12	1N5532D	1	12	400m§	1 0m	90		175A	DO7
13▼	1N5738B	5	12	400m	5.0m	25	7 5	200J	DO35
14#	1S197	5 0	12	.40	10m	20	7 0	150J	A1ce
15#	1S2120	10	12	40	5 0m	75	7 0	150A	A1
16#	1S2120A	5	12	.40	5 0m	60	7 0	150A	A1
17#	1S7120,B	x15	12	.40	5 0m	75	7 0	150A	A1
18#	1S7120A	5	12	.40	5.0m	60	7.0	150A	A1
19#	5522	5	12	40	5 0m	20	6.0	125A	A1ce
20#	BZX46C12	5	12	400m	10	11	6.5	175J	DO35
21#	BZX55C12	5	12	400m	5.0m	20	6 5	150J	DO35
22▼#	BZX71B12	2	12	400m§	5.0m	25		175J	DO35
23#	BZX71C12	5	12	400m§	5 0m	25		200S	A9m
24#	BZX74C12	5	12	400m	12m	100	6.8		A31e
25#	BZX79C12	5	12	400m	5 0m	25	90	200J	A257
26#	BZX83C12	5	12	400m	5 0m	20	6 5	150J	DO35
27▼#	BZY85B12	2	12	400m	5 0m	25	6 6	150J	DO7
28#	BZY85D12	10	12	400m	5.0m	30	6 6	150J	A1su
29#	BZY88C12	5	12	40	5 0m	35		175J	DO7
30#	BZY94C12	5	12	40	5.0m	15 ∅		150J	DO7
31	C4018	10	12	400m	11m	11		175	A134a
32	C6018	10	12	400m	1 0m	30 ∅	6 5	175A	M371c
33	C6018A	5	12	400m	1 0m	30 ∅	6 5	175A	M371c
34	C6118	10	12	400m	1 0m	30	6 5	175A	M131a
35	C6118A	5	12	400m	1 0m	30	6 5	175A	M131a
36	CZA12D,10,5								
		xxx	12	40 ∅	250u	200	6 5	175J	M371
37	CZB12D,10,5								
		xxx	12	40 ∅	5 2m	15	6 5	175J	M371
38	CZC12D,10,5								
		xxx	12	400m∅	10	11	6 5	175J	M371
39	CZD012,-5	xx	12	.40	10m	10		175	DO7
40	CZD12D,10,5								
		xxx	12	.40 ∅	250u	200	6 5	175J	M451
41	CZE12D,10,5								
		xxx	12	400m∅	10m	11	6 5	175J	M451
42	CZF12D,10,5								
		xxx	12	.40 ∅	250u	200	4 5	175J	M452
43	CZG12D,10,5								
		xxx	12	40 ∅	20m	30	6 2	175J	M452
44	HM12,A,B	xxx	12	400m§	10m	11		175A	A196c
45#	HS7120	5	12	40	5 0m			175A	DO7
46#	KS120A	5	12	400m	5 0m	60	11 △	150A	DO7
47#	KS120B	10	12	.40	5 0m	75	11 △	150A	DO7
48#	LR120CH	5	12	.40	5 0m	40	6.4	150S	DO7
49	M4Z12,A,-20								
		xx*	12	400m	10m	11		150A	A1kk
50#	M12Z	5 0	12	400m	5 0m	20	6.5	150A	DO7
51	MACZA12D,10,5								
		xxx	12	40 ∅	250u	200	6.5	175J	M453
52	MACZB12D,10,5								
		xxx	12	.40 ∅	5 2m	15	6 5	175J	M453
53	MACZC12D,10,5								
		xxx	12	400m∅	10m	11	6 5	175J	M453
54	MACZD12D,10,5								
		xxx	12	40 ∅	250u	200	6.5	175J	M453
55	MACZE12D,10,5								
		xxx	12	400m∅	10m	11	6.5	175J	M453
56	MACZF12D,10,5								
		xxx	12	40 ∅	250u	200	4 5	175J	M453
57	MACZG12D,10,5								
		xxx	12	40 ∅	20m	30	6.2	175J	M453
58	MBCZA12D,10,5								
		xxx	12	40 ∅	250u	200	6 5	175J	M454
59	MBCZB12D,10,5								
		xxx	12	40 ∅	5 2m	15	6 5	175J	M454
60	MBCZC12D,10,5								
		xxx	12	400m∅	10m	11	6 5	175J	M454
61	MBCZD12D,10,5								
		xxx	12	40 ∅	250u	200	6 5	175J	M454
62	MBCZE12D,10,5								
		xxx	12	400m∅	10m	11	6.5	175J	M454
63	MBCZF12D,10,5								
		xxx	12	400m∅	250u	200	4 5	175J	M454
64	MBCZG12D,10,5								
		xxx	12	.40 ∅	20m	30	6 2	175J	M454
65	MCCZA12D,10,5								
		xxx	12	40 ∅	250u	200	6 5	175J	M455
66	MCCZB12D,10,5								
		xxx	12	40 ∅	5 2m	15	6 5	175J	M455
67	MCCZC12D,10,5								
		xxx	12	400m∅	10m	11	6 5	175J	M455
68	MCCZD12D,10,5								
		xxx	12	40 ∅	250u	200	6 5	175J	M455
69	MCCZE12D,10,5								
		xxx	12	400m∅	10m	11	6.5	175J	M455
70	MCCZF12D,10,5								
		xxx	12	40 ∅	250u	200	4.5	175J	M455
71	MCCZG12D,10,5								
		xxx	12	40 ∅	20m	30	6.2	175J	M455
72	MDCZA12D,10,5								
		xxx	12	40 ∅	250u	200	6 5	150A	M410
73	MDCZB12D,10,5								
		xxx	12	.40 ∅	5 2m	15	6 5	150A	M410
74	MDCZC12D,10,5								
		xxx	12	400m∅	10m	11	6.5	150A	M410
75	MDCZD12D,10,5								
		xxx	12	40 ∅	250u	200	6 5	150A	M410
76	MDCZE12D,10,5								
		xxx	12	400m∅	10m	11	6.5	150A	M410

LINE No.	3 TYPE No.	TOLERANCE 1 20 10 5 2 ± (%)	NOM. REF VOLT. (V)	2 MAX. DISS. @ 25°C (W)	TEST CUR. Izt (A)	MAX DYN. IMP. (Ω)	TEMP. COEFF Tc	MAX. TEMP (°C)	DWG. No.
77	MDCZF12D,10,5								
		xxx	12	40 ∅	250u	200	4 5	150A	M410
78	MDCZG12D,10,5								
		xxx	12	.40 ∅	20m	30	6 2	150A	M410
79	MZ500-18	10	12	4 §	20m	30 ∅	7 7	175J	DO7
80	MZC12A10	†	12	400m§	4.2m	71	7 7 △	175J	M468
81	MZC12B10	§†	12	400m§	250u	200		175J	M468
82	WZ535	5	12	.40	5.0m	15		150A	A31e
83#	Z5A12	1	12	400m§	5 0m	40	8 0 △	200J	A1hs
84#	Z5B12	5	12	400m§	5 0m	40	8 0 △	200J	A1hs
85#	Z5C12	10	12	400m§	5 0m	40	8 0 △	200J	A1hs
86#	Z5D12	15	12	400m§	5 0m	40	8.0 △	200J	A1hs
87#	ZF12	5	12	400m	5 0m	20	7 5	150J	DO7
88#	ZG12	10	12	400m	5.0m	30	7.5	150J	DO7
89#	ZP12#	5	12	400m	5.0m	20	7.5	150J	DO7
90	1/2Z12T5	5	12	50	11m	9 2		175	A94f
91	1N3403∅	10	12	50	10m	15	4 0	200A	P5
92	1N3416	10	12	50	1 0m	110	4 2	200A	P5
93	1N5242	20†	12	50	20m			200A	DO7
94	1N5242A,B	§∅	12	50	20m	10	7 7	200A	DO7
95#	DZ12A	10	12	50	16m	18	5 7	150A	A100
96▼	HEPZ0222-RT								
		10	12	500m	20	70			C103
97	IDAZ3403,A,B,C∅								
		xxxx	12	500m	10m	15	4 0	200A	A1hc
98	MCPD537B	10	12	500m	10m	24		150A	M411a
99	MCPD537C	10	12	500m	10m	24		150A	M277d
100	MTZ616,A	xx	12	.50	10m	24		175A	A60e
101	MZ92-12	†	12	500m§	20m		7.0	150J	C103
102	PS8915	5	12	.50	20m	5 0	7.8	150	A60p
103	S5242,A,B	xxx	12	500m	20m	30	7 7	175	DO41
104#	ZSF12	1	12	500m	7.0m	10	1 0	150S	M487a
105#	ZOA12	1	12	520m	5.0m	10	8.0 △	150J	A1ef
106#	ZOB12	5	12	520m	5 0m	10	8 0 △	150J	A1ef
107#	ZOC12	10	12	520m	5.0m	10	8.0 △	150J	A1ef
108#	ZOD12	15	12	520m	5 0m	10	8.0 △	150J	A1ef
109	1N4634	5	12	.60	11m	700	7 6	200A	DO14
110#	NTO.6C12	5	12	600m	5 0m	20		125J	M498
111#	UZ12	10	12	60	50m	6 0	7 5	135A	DO3
112#	ZC012	5	12	60	1.0m	45	5 5	100	A3k
113#	ZD012	10	12	.60	1 0m	45	5.5	100	A3k
114#	ZW12	5	12	600m	5 0m	20	7.5	150J	A1bg
115	ZZ12△	10	12	.60	10m	8 0	6 0	175A	M222
116	7JZ12	†	12	750m	10m	11	6.5	175	DO15
117	.7Z12,A,B,D								
		xxxx	12	750m	10m	11	6 5	175	DO27
118	7Z12C	∅	12	750m	10m	11	6 5	175	DO27
119	.7ZM12,A,B,D								
		xxxx	12	750m	10m	11	6.5	175	DO41
120	7ZM12C	∅	12	750m	10m	11	6.5	175	DO41
121	1N1513,A	xx	12	.75	12m	6 5	7 5	200S	DO12
122	1N2037A	5	12	75	5 0m	70	7.0	150J	DO12
123	1N3681	20	12	750m	11m	11	7 5	175S	A1az
124	1N3681A	10	12	750m	11m	11	7.5	175S	A1az
125	1N3681B	5	12	750m	11m	11	7.5	175S	A1az
126	MC6116,A	xx	12	75	25m	24		175A	A2d
127	MMZ12,A,-20								
		xx*	12	750m§	10m	11		150A	A1kk
128	MZ12T20,10,5								
		xxx	12	.75	12m	9.8	7.5	165A	A152
129	SV1017	5	12	75	5 0m	70 ∅	6 6	150	A82f
130	WZ917	5	12	.75	5 0m	70 ∅		150A	A1fw
131	1A12M,A,B	xxx	12	1 0	21m	9 0		75A	DO15
132	1E12Z,10,5	xxx	12	1 0	21m	9 0	6 5	150A	A52g
133	1M12Z,10,5	xxx	12	1 0	21m	9 0	6 5	175S	DO1
134	1N1426§	5	12	1 0	20m	7 0 ∅	6 0	200A	A154
135	1N1524,A	xx	12	1 0	15m	6 0	7 5	200S	DO3
136	1N1773,A	xx	12	1 0	50m	5 0		175S	DO13
137	1N1877	10	12	1 0	25m	7.0	5 9	200C	A126
138	1N1877A	5	12	1 0	25m	7 0	5 9	200C	A126
139	1N1877B	1	12	1.0	25m	1 8 △	5 8	175A	DO13
140	1N3022	20	12	1 0	21m	9 0		175A	A31a
141	1N3022A	10	12	1 0	21m	9.0		175A	A31a
142	1N3022B	5	12	1 0	21m	9 0		175A	A31a
143	JAN1N3022B	5	12	1 0	21m	9 0	7 6	175A	A31c
144	1N3537	10	12	1 0	25m	2 4	5 8	175S	A31a
145	1N4164	20	12	1.0	21m	9 0	6 5	175	DO29
146	1N4164A	10	12	1.0	21m	9 0	6 5	175	DO29
147	1N4164B	5	12	1.0	21m	9 0	6 5	175	DO29
148	1N4329,A,B	xxx	12	1 0	21m	9 0	6 5	300S	DO7
149♦	1N4406	20	12	1 0	21m	4 0		175S	A266a
150	1N4406A	10	12	1 0	21m	4.0	6 5	175A	A1cm
151	1N4406B	5	12	1 0	21m	4 0	6 5	175A	A1cm
152	1N4663	5	12	1.0	21m	400	7 6	200A	DO15
153	1N4742	10	12	1 0	21m	9 0		200A	A1ay
154	1N4742A	5	12	1 0	21m	9 0		200A	A1ay
155	1N5565	20	12	1 0 §	21m			200A	A196d
156	1N5565A	10	12	1 0 §	21m	9 0		200A	A196d
157	1N5565B	5	12	1 0 §	21m	9 0		200A	A196d
158	1N5635		12	1 0	1 0m		7 8	175A	DO13
159	1N5635A		12	1 0	1 0m		7 8	175A	DO13
160	1R12,A,B	xxx	12	1 0	21m	9.0	6 5	175A	A52c
161#	1S227	10	12	1 0	25m	7.5		150J	A56a
162#	1S3012	xx	12	1 0	20m	8 0	6 5	150	A3
163	1Z12,A,B	xxx	12	1 0	21m	9.0		150	A1ay
164	1Z12T20,10,5								
		xxx	12	1 0	15m	9 0	7 5	165A	A89c
165#	1ZC12T10,5	xx	12	1 0	15m	12	7 5	165A	A31p
166#	25Z6F,AF	12,6	12	1 0	10m	24	8 0	150J	DO13
167	AV5	10	12	1 0	50m	6 0		150A	A19
168	AV2012	∅2	12	1 0	50m	6.0		150A	A19
169▼#	BZ120	5	12	1 0	20m	9.0	6 8	175J	A60t
170#	BZX29C12	5	12	1 0	20m	9.0	6 5	175J	A1cd
171#	BZX61C12	5	12	1 0	20m	9.0	5.0	175J	A3y
172♦	BZX85C12	5	12	1 0	20m	9 0	7 2	150A	DO15
173	CD31-00015	5	12	1 0	21m	9 0	7 2	200A	A1ce
174	CD31-12022	5	12	1 0	21m	9.0		200A	A1ce
175	CD32-12052	5	12	1.0	21m	9 0			
176	CZ12,A,B,D	xxxx	12	1 0	40m	14	6 5	175	DO15
177	CZ12C	∅	12	1 0	40m	14	6.5	175	DO15

SYMBOLS AND CODES EXPLAINED IN INTERPRETER

2. SILICON REFERENCE DIODES

IN ORDER OF (1) REF. VOLTAGE, (2) DISSIPATION, and (3) TYPE No.

LINE No	3 TYPE No	TOLERANCE 1 20 10 5 2 ± (%)	NOM. REF. VOLT. (V)	2 MAX. DISS. @ 25°C (W)	TEST CUR. Izt (A)	MAX. DYN. IMP. (Ω)	TEMP. COEFF Tc	MAX. TEMP (°C)	DWG. No.
1	EVR12,A,B	xxx	12	1.0	21m	17		175A	DO27
2#	EZ12A	10	12	1 0	33m	700	5.7		A1em
3#	FPZ12	5	12	1.0	21m	400	6 5		A31h
4	G12T20,10,5	xxx	12	1 0	21m	9 0	8 0	175A	DO15
5#	GZ12	5	12	1 0	25m	25 △		150A	S115
6▼	HEP105-RT	10	12	1.0	21	10			DO41
7	HW12,A,B	xxx	12	1 0	21m	9 0		175	A196
8	JZ12,A,B,D	xxxx	12	1 0	21m	9 0	6.5	175	DO15
9	JZ12C	⍁	12	1 0	21m	9 0	6 5	175	DO15
10	LPM12,A,-20	xx*	12	1 0	21m	9 0		150A	A1kk
11	LPZT12∅	10	12	1 0	25m	7 0	5 0	185	A86
12	PS10022B	5	12	1 0	21m	9 0		175A	A60p
13	PS10066	5	12	1 0	21m	7 0	7 8	150	A60p
14	SZ12 0	xxxx	12	1 0	20m	8 0 ∅	7 0	150A	A3g
15	TZ12,A,B,D	xxxx	12	1 0	40m	14	6 5	175	DO27
16	TZ12C	⍁	12	1 0	40m	14	6.5	175	DO27
17	UZ8712	5	12	1 0	23m	9 0	7 0	175	A146h
18	UZ8812	10	12	1 0	23m	9 0	7 0	175	A146h
19	VR12,A,B	xxx	12	1.0	21m	9 0		125A	A1b
20	Z2A120F	20§∅	12	1 0	20m	36	7 5	100J	A141
21#	Z4A12	1	12	1 0	50m	7 0	8 0 △	150J	A1ef
22#	Z4B12	5	12	1 0	50m	7 0	8 0 △	150J	A1ef
23#	Z4C12	10	12	1 0	50m	7 0	8 0 △	150J	A1ef
24#	Z4D12	15	12	1 0	50m	7 0	8 0 △	150J	A1ef
25	Z4XL12,B	xx	12	1 0	20m	24	7 1	165A	DO13
26	Z12,A,B,D	xxxx	12	1 0	21m	9 0	6 5	175	DO27
27	Z12C	⍁	12	1 0	21m	9 0	6 5	175	DO27
28	ZA12,A,B	xxx	12	1 0	21m	9 0		150C	A1ew
29	ZB12#	†	12	1 0 §	21m	9 0		150A	A1bc
30	ZD12⍁,A,B	xxx	12	1 0	21m	8 0	6 5	175A	A1cm
31#	ZEC12	20	12	1 0	15m	12	08	165A	DO3
32#	ZF12A	10	12	1 0	33m	8 7	5 7	150A	DO13
33	ZH12,A,B	xxx	12	1 0	21m	9 0	6 5	175A	DO1
34	ZM12△	†	12	1 0	21m	9 0	6 5	175	DO41
35	ZM12,A,B,D	xxxx	12	1 0	21m	9 0	6 5	175	DO41
36	ZM12C	⍁	12	1 0	21m	9 0	6 5	175	DO41
37#	7722	5	12	1 1	50m	7 0	6 0	125A	A1bu
38#	BZY92C12	5	12	1 1	50m	7 0	6 0	150J	DO13
39	1N4834,A,B	xxx	12	1 2	21m	12	7 6	175	DO29
40#	BZX67C12	5	12	1 3	50m	7 0	6.0	150J	S287
41#	SZL12	5	12	1 3	50m	6 0		150J	M72
42#	ZD12#	5	12	1 3	50	7 0	6 0	150J	DO13
43	ZM12⍁	10	12	1 3	50	7 0	6 0	150J	DO13
44#	ZU12	10	12	1 3	50	7 0	6 0	150J	A1bg
45#	ZY12	5	12	1 3	50	7 0	6.0	150J	A1bg
46▼	1N3791	20	12	1 5	31m	7 0	7 6	175S	C14⍁
47▼	1N3791A	10	12	1 5	31m	7 0	7 6	175S	C14⍁
48▼	1N3791B	5	12	1.5	31m	7 0	7.6	175S	C14⍁
49	1N4467	5	12	1 5	21m	7 0		175A	A196
50	JAN1N4467	10	12	1 5	21m	7 0	7 6	175A	A1v
51#	1S4012,A	xx	12	1 5	20m	2 5	6.5	150A	DO1
52	1 5DKZ12,A,B	xxx	12	1 5	31m	7 0		175A	DO27
53	1 5DKZ13,A,B	xxx	12	1 5	31m	7 0		175A	DO27
54	1 5JZ12,A,B,D	xxxx	12	1 5	31m	7 0	7.6	175	DO15
55	1 5JZ12C	⍁	12	1 5	31m	7 0	7.6	175	DO15
56	1 5R12,A,B	xxx	12	1 5	32m	7 5	6.5	175A	A52c
57	1 5Z12,A,B,D	xxxx	12	1 5	31m	7 0	7 6	175	DO27
58	1 5Z12C	⍁	12	1 5	31m	7.0	7 6	175	DO27
59#	BZY95C12	5	12	1 5	50m	5 0	8 0	175J	DO1
60	MC6316,A	xx	12	1 5	75m	22			A1q
61	MZ1000-15	10	12	1 5 §	21m	14 ∅	7 7	175J	A1ay
62#	SZ12C	5	12	1 5	20m	30	7 0	160A	A26
63#	Z2A12	1	12	1 5	50m	6 0	8 0 △	150J	A244
64#	Z2B12	5	12	1 5	50m	6 0	8 0 △	150J	A244
65#	Z2C12	10	12	1 5	50m	6.0	8 0 △	150J	A244
66#	Z2D12	15	12	1 5	50m	6 0	8.0 △	150J	A244
67#	Z3A12	1	12	1 5	100m	5.0	8.0 △	150J	S4f
68#	Z3B12	5	12	1 5	100m	5 0	8.0 △	150J	S4f
69#	Z3B120CF	20§∅	12	1 5	20m	8.0	7.5	175J	DO1
70#	Z3C12	10	12	1 5	100m	5 0	8 0 △	150J	S4f
71#	Z3D12	15	12	1.5	100m	5 0	8.0 △	150J	S4f
72#	65Z6,A	12,6	12	1.8	100m	20	1.1	150J	DO4
73#	ZC2012	5	12	1 8	1 0m	45	5.5	150	DO3
74#	ZD2012	10	12	1 8	1 0m	45	5 5	150	DO3
75	2R12,A,B	xxx	12	2 0	42m	7 5	6 5	175A	DO27
76	2VR12,A,B	xxx	12	2 0	42m	7 5			A3e
77	LMZ12,A,-20	xx*	12	2 0	41m	4 5		150A	A1kk
78	ZBC12	†	12	2 0 §	42m	5 0		150A	A1bc
79#	VR12F	5	12	2 2	20m	11		200S	DO3
80	1N5022	10	12	2.5	52m	4.2	6 5	150	A1gn
81	1N5022A	5	12	2 5	52m	4 2	6 5	150	A1gn
82#	BZX70C12	5	12	2 5	50m	5 0	80	150J	A171b
83	1N4883	5	12	3 0	65m	5 0		175A	A60n
84	3R12,A,B	xxx	12	3 0	63m	5.0	6.5	175A	A1rw
85	3TZ12,A,B,D	xxxx	12	3 0	75m	5 0	7 5	175	A1ec
86	3TZ12C	⍁	12	3 0	75m	5 0	7.5	175	A1ec
87	3VR12,A,B	xxx	12	3 0	63m	5 0			A222
88	3Z12,A,B	xxx	12	3 0	63m	5 0		150	A222
89	CZ4883	10	12	3 0	65m	5 0	80	175A	A196e
90#	FDZ12A	10	12	3 0 ⍁	100m	2 9	5 7	150A	S303
91	M3Z12,A	xx	12	3.0	62m	5 6		150A	A1kk
92	MZ712	5	12	3 0	65m	5 0	7 0	175A	A146j
93	MZ812	10	12	3 0	65m	5 0	7.0	175A	A146j
94	MZ912	20	12	3 0	65m	5 0	7.0	175A	A146j
95#	NT3C12	5	12	3 0	5 0m	50		125J	S43a
96	UZ712	5	12	3.0	65m	5.0	7 0	175A	A146f
97	UZ812	10	12	3.0	65m	5 0	7 0	175A	A146f
98	UZ912	20	12	3 0	65m	5 0	7 0	175A	A60
99	ZAC12,A,B	xxx	12	3 0	21m	9 0		150C	A1ey
100	ZCC12	†	12	3.0 §	60m	5 0		150A	A1ey
101	1N1594,A	xx	12	3 5	50m	3 0	7.5	200S	DO4
102	3Z12T20,10,5	xxx	12	3 5	50m	4.5	7 5	165	DO4
103#	4GZ12A	10	12	4 0	210m	250	6 5		S19g
104	1N4020,A,B	xxx	12	5 0	105m	2.5	7 6	180A	S82
105	1N4960	5	12	5 0	100m	2 5		175A	A146m
106	JAN1N4960	5	12	5.0	100m	2 5	7 0	175A	A248f
107	1N4960D	5	12	5 0	100m	2 5		175A	A146m
108♦	1N5349	20	12	5 0	100m			200A	A1ee
109▼	1N5349A	10	12	5.0	100m	2.5		200A	A1ee
110▼	1N5349B	5	12	5 0	100m	2.5		200A	A1ee
111▼	5ZS12,A,B	xxx	12	5 0 §	100m	2 5		200A	A1ts
112#	1312	10∅	12	5.0	60m	4 0	7 0	150J	A9h
113▼	CTZC12,A,B,D∅	xxxx	12	5 0 §	100m	2 5 ∅	6 5	175A	A1ey
114▼	CTZC12C∅	1	12	5 0 §	100m	2.5 ∅	6.5	175A	A1ey
115▼	CTZC12E∅	3	12	5.0 §	100m	2.5 ∅	6.5	175A	A1ey
116	DSZ5712	5	12	5 0	100m	2 5	7 0	175A	A60r
117	DSZ5812	10	12	5 0	100m	2 5	7 0	175A	A60r
118	MZ5712	5	12	5 0	100m	2.5	7 0	175A	A60f
119	MZ5812	10	12	5 0	100m	2 5	7 0	175A	A60f
120	MZ5912	20	12	5 0	100m	2.5	7 0	175A	A60f
121▼	TZC12,A,B,D	xxxx	12	5.0 §	100m	2 5 ∅	6 5	175A	A1ey
122▼	TZC12C	1	12	5 0 §	100m	2.5 ∅	6 5	175A	A1ey
123▼	TZC12E	3	12	5 0 §	100m	2 5 ∅	6 5	175A	A1ey
124▼	UZ5712	5	12	5 0	100m	2.5	7 0	175A	A146m
125♦	UZ5812	10	12	5 0	100m	2 5	7 0	175A	A146m
126	UZ5912	20	12	5 0	100m	2 5 ∅	7 0	175A	A146m
127	ZC12	†	12	5 0 §	100m	2 5		150A	A1ey
128#	VR12E	5	12	5 8	20m	11		200S	DO4
129	UZ4712	5	12	8.0	100m	2 5		175A	A146m
130	UZ4812	10	12	8.0	100m	2 5		175A	A146m
131	1N1353,A	xx	12	10	500m	2.0		175A	DO4
132	1N1353B	20	12	10	500m	2 0			S11e
133	1N1353C,CA∅	xx	12	10 §	50	2 0		175J	S19a
134	1N1417	5	12	10	200m	3 5 ∅	6 0	175C	S154
135	1N1605,A	xx	12	10	170m	2.0	7 5	200S	DO4
136	1N1893	10	12	10	25m	7 0	5 9	200A	S82
137	1N1893A	5	12	10	25m	7 0	5 9	200A	S82
138	1N2046-1	5	12	10	500m	2 0	7 0	150J	DO4
139	1N2500	10	12	10	500m	2 0	6 0	150A	S19a
140	1N2500A	5	12	10	500m	2 0	6 0	150A	S19a
141	1N2500C,CA∅	xx	12	10	500m	2 0	6 0	150A	S19a
142	1N2976,A,B	xxx	12	10	210m	3 0		175C	DO4⍁
143	JAN1N2976B,RB	5	12	10	210m	3 0	7 6	150C	DO4
144	1N4264	20	12	10	210m	3 0	6 5	175C	S134
145	1N4264A	10	12	10	210m	3 0	6 5	175C	S134
146	1N4264B	5	12	10	210m	3 0	6.5	175C	S134
147	JAN1N4264B	5	12	10 §	210m	3 0	7 6	175S	S134a
148#	1S269	10	12	10	250m	3 0		150J	S19g
149#	1S6012	10	12	10	200m	2 5	5 5	150	DO4
150#	1S6012A	5	12	10	200m	2.5	5 5	150	DO4
151	10PZ12,A,B,D	xxxx	12	10	210m	3 0	6 5	175	DO4
152	10PZ12C	⍁	12	10	210m	3 0	6.5	175	DO4
153	10RZ12,A,B,D	xxxx	12	10	500m	2.0	6 5	155	DO4
154	10RZ12C	⍁	12	10	500m	2 0	6 5	155	DO4
155	10Z12T20,10,5	xxx	12	10	170m	3 0	7 5	165	DO4
156	AV105	10	12	10	500m	2.0		150A	S11
157	AV8012	∅2	12	10	500m	2 0		150A	S11
158#	CC4012	5	12	10	15m	15	4 4	150	S19
159#	CD4012	10	12	10	15m	15	4 4	150	S19
160#	GZ12A	10	12	10 ⍁	160m	1 8	5 7	150A	DO4
161#	OAZ230	5	12	10	20m	28		150J	DO4
162#	PZ12A	10	12	10 ⍁	160m	1 8	5 7	150A	S95a
163	PZT12∅	10	12	10 ⍁	25m	7 0	5 0	185	S82
164	UZ7712	5	12	10	200m	1.3	7.0	175	S277⍁
165	UZ7812	10	12	10	200m	1 3	7.0	175	S277⍁
166	UZ7912	20	12	10	200m	1 3	7.0	175	S277⍁
167#	Z5D120CF	20§∅	12	10	50m	2.5	6 5	150J	DO4
168#	ZC5012	5	12	10	200m	2 5	5 2	150A	S19
169#	ZD5012	10	12	10	200m	2 5	5.2	150A	S19
170#	BZZ22	5	12	13	20m	5 2k	8.8	150	DO4
171#	1212	10∅	12	15	300m	1 0	7 0	150J	S87
172#	4222	10∅	12	15	300m	1 0		150J	S87
173#	BZY93C12	5	12	20 §	1	1 0	8 0	175J	DO4⍁
174#	85Z6,A	12,6	12	25	400m	3.8	8 0	150J	S179
175#	ZL12	10	12	25 ⍁	50	7 0	6 0	150J	M41
176#	ZX12	5	12	25 ⍁	50	7 0	6 0	150J	M41
177#	4322	10∅	12	30	300m	1.0		150J	S87
178#	4422	10∅	12	30	300m	1 0		150J	S87
179	75TE12,A	xx	12	36	830m	6 0m	1 0	125C	TO36
180	1N2810,A,B	xxx	12	50	1	1.0	6.5	175S	C5a
181	JAN1N2810B,RB	5	12	50	1	1.0	7.6	150C	C5a
182	1N3311	20	12	50	1 0	1 0	6.5	175J	DO5
183	1N3311A	10	12	50	1 0	1.0	6 5	175J	DO5
184	1N3311B	5	12	50	1 0	1 0	6.5	175J	DO5
185	JAN1N3311B,RB	5	12	50	1	1.0	7.6	150	DO5
186	5OT12,A,B	xx*	12	50	1 0	1 0	6.5		S19e
187	AV51012	5	12	50	1	1 0	6.5	150C	C5a
188#	BZY91C12	5	12	75 §	2	50	9 0	175J	DO5⍁
189	80TF12,A	xx	12	80	830m	6.0m	1 0	125C	M117c
190#	4522	10∅	12	100	420m	.60		150J	S84
191#	4622	10∅	12	100	420m	600m		150J	S84
192#	ZC712△	5	12	100 §	100	2.0	6.0	175J	S125d⍁
193	250ZE12	10	12	250 §	15		8.0	190A	S83
194	250ZF12	10	12	250 §	15		8.0	190A	M56a
195	LID12,A	xx	12	400	10m	12		150A	M401
196	1N1736	5	12 4	40	7.5m	40	80	150C	A1jm
197	1N1736A	5	12.4	.40	7 5m	40	40	150C	A1jm
198	TC12.4A5A	5△⍁	12.4	1 0	10m	25	05	175A	A1ss
199	1N4057	5	12.4	1.5	10m	25	50	100	A1ss
200	1N4057A	5	12.4	1.5	10m	25	.20	100	A1ss

SYMBOLS AND CODES EXPLAINED IN INTERPRETER

2. SILICON REFERENCE DIODES

IN ORDER OF (1) REF. VOLTAGE, (2) DISSIPATION, and (3) TYPE No.

LINE No.	TYPE No.	TOLERANCE 3 (20 10 5 2) ± (%)	NOM. REF. VOLT. 1 (V)	MAX. DISS. 2 @ 25°C (W)	TEST CUR. Izt (A)	MAX. DYN. IMP. (Ω)	TEMP. COEFF Tc	MAX. TEMP (°C)	DWG. No.
1	SVR12A	5	12 6	40	7 5m	30	1 △	175S	DO7
2	SVR12B	5	12.6	.40	7 5m	30	5 △	175S	DO7
3	SVR12C	5	12.6	40	7.5m	30	2 △	175S	DO7
4	CD3127	5	12.7	25	5 0m	70 Ø	8.1	150A	A1sj
5	1N227Ø	10	12.8	150m	200u			150A	C1
6	1N227AØ	5	12.8	150m	200u			150A	C1
7	1N1315,A	xx	12.8	15	20m		7 5	150A	C1
8	IDAZ227,A,B,CØ	xxxx	12 8	150m	200m			150A	A1hc
9#	RD13A	10	12.8	20	5 0m	35	7 5	150S	A1dw
10	1N766	xx	12 8	250m	5 0m	55	7 0	150	DO7
11	1N766A	xx	12 8	250m	5 0m	55	7.0	150	DO7
12#	1S760	xxx	12.8	25	5 0m	30	7.0	150	C1d
13	1N4896	5	12 8	40	50m	400	1.0	175	DO7
14	1N4896A	5	12 8	.40	50m	400	1 0	175	DO7
15	1N4897	5	12.8	40	50m	400	50	175	DO7
16	1N4897A	5	12 8	40	50m	400	50	175	DO7
17	1N4898	5	12 8	40	50m	400	20	175	DO7
18	1N4898A	5	12.8	40	50m	400	20	175	DO7
19	1N4899	5	12.8	40	50m	400	.10	175	DO7
20	1N4899A	5	12.8	40	50m	400	.10	175	DO7
21	1N4900	5	12 8	.40	1.0m	200	1 0	175	DO7
22	1N4900A	5	12 8	40	1 0m	200	1 0	175	DO7
23	1N4901	5	12.8	40	1 0m	200	50	175	DO7
24	1N4901A	5	12 8	40	1 0m	200	50	175	DO7
25	1N4902	5	12.8	40	1 0m	200	20	175	DO7
26	1N4902A	5	12.8	40	1 0m	200	20	175	DO7
27	1N4903	5	12 8	.40	1 0m	200	10	175	DO7
28	1N4903A	5	12 8	40	1 0m	200	10	175	DO7
29	1N4904	5	12.8	40	2 0m	100	1.0	175	DO7
30	1N4904A	5	12.8	.40	2 0m	100	1 0	175	DO7
31	1N4905	5	12 8	40	2 0m	100	.50	175	DO7
32	1N4905A	5	12 8	40	2 0m	100	.50	175	DO7
33	1N4906	5	12 8	.40	2 0m	100	20	175	DO7
34	1N4906A	5	12 8	40	2 0m	100	20	175	DO7
35	1N4907	5	12.8	40	2 0m	100	10	175	DO7
36	1N4907A	5	12 8	40	2 0m	100	10	175	DO7
37	1N4908	5	12 8	40	4 0m	50	1 0	175	DO7
38	1N4908A	5	12 8	40	4 0m	50	1.0	175	DO7
39	1N4909	5	12 8	40	4 0m	50	50	175	DO7
40	1N4909A	5	12 8	40	4 0m	50	50	175	DO7
41	1N4910	5	12 8	40	4 0m	50	20	175	DO7
42	1N4910A	5	12.8	40	4 0m	50	20	175	DO7
43	1N4911	5	12 8	40	4.0m	50	10	175	DO7
44	1N4911A	5	12 8	40	4 0m	50	10	175	DO7
45	1N4912	5	12 8	40	7 5m	25	1.0	175	DO7
46	1N4912A	5	12 8	40	7 5m	25	1 0	175	DO7
47	1N4913	5	12.8	40	7 5m	25	50	175	DO7
48	1N4913A	5	12 8	40	7 5m	25	50	175	DO7
49	1N4914	5	12.8	.40	7 5m	25	20	175	DO7
50	1N4914A	5	12.8	.40	7 5m	25	20	175	DO7
51	1N4915	5	12.8	40	7 5m	25	10	175	DO7
52	1N4915A	5	12 8	40	7 5m	25	10	175	DO7
53	1N2037	5	12 8	75	5 0m	70	7.0	150J	DO12
54#	RD13B	10	12 8	1.0	20m	9 0	7 5	150S	A164
55#	RD13C	10	12 8	3 0	60m	6 0	7 5	150S	S42
56	1N2046	5	12 8	10	500m	2 0	7 0	150J	DO4
57#	RD13D	10	12.8	10	200m	2 5	6.5	150S	S103
58	1N2046B	5	13		500m	2 0		150A	S19a
59	DSZ3013	10	13		50m	6 0	7.0		A266
60#	RZ13	5	13	08	2 0m	100		150A	C18e
61#	RZZ13	5	13	08	5 0m	120		150A	C18e
62#	AZ13Ø	5	13	15	5 0m	45		170A	DO7
63#	Z13Ø	5	13	150m	5 0m	70		150A	C18d
64#	ZZ13	5	13	15	5 0m	90		150A	C18d
65#	SZ200-13	15	13	20	5 0m	60	7 5	100A	A138
66	1/4A13,A,B	xxx	13	25	4 8m	18	7 0	175	DO7
67	1/4M13Z,10,5	xxx	13	250m	4 8m	18	7 0	175J	A1cy
68	25N13	20	13	25	4 8m	18		250	DO7
69	1N717,A	xx	13	25	12m	11	7 0	175A	DO7
70	1N717B	20	13	25	12m	11			DO7
71	1N766-2	5	13	.25	5 0m	55	7 0	150	DO7
72	1N4107	5	13	25	25m	200		200J	DO7
73	1N4700	5	13	25	05m			200A	DO14
74#	02Z13A	5	13	250m	5 0m	60	8 0	175J	DO35
75#	BZY85C13V5	5	13	25 §	5 0m	26	9 △	150J	A171f
76#	KS2130A	5	13	250m	5 0m	75	8.0 △	150A	DO7
77#	KS2130B	10	13	250m	5 0m	90	8 0 △	150A	DO7
78#	MR130C-H	5	13	25	5 0m	40		250	DO7
79	PD6017,A	xx	13	25	1 0m	30		150	A109
80	PD6058	5	13	.25	5 0m	13		150	A2c
81	SV136	5	13	.25	5.0m	50	6.9	150	DO7
82#	SZ13	5	13	25	5 0m	50	83	150J	C1f
83	MC6017,A	xx	13	.30	5.0m	27		175	A2m
84#	Z1A13	1	13	320m	5.0m	30	8 0 △	150A	C29
85#	Z1B13	5	13	320m	5 0m	30	8 0 △	150A	C29
86#	Z1C13	10	13	320m	5.0m	30	8.0 △	150A	C29
87#	Z1D13	15	13	320m	5 0m	30	8 0 △	150A	C29
88	1N964,A,B	xxx	13	40	9 5m	13	6.5	175S	DO7
89	JAN1N964B	5	13	40	9 5m	13	7.9	175A	DO7
90	1N3521	5	13	.40	5 0m	12	7 5	200A	DO7
91	JAN1N4107	5	13	400m	250u	200	8 0	175A	A1sx
92	1N5533	20	13	400m§	1 0m			175A	DO7
93	1N5533A	10	13	400m§	1 0m			175A	DO7
94	1N5533B	5	13	400m§	1 0m	90		175A	DO7
95▼	JAN1N5533B	5	13	400m	1 0m	90	8.0	200A	DO14
96	1N5533C	2	13	400m§	1 0m	90		175A	DO7
97	1N5533D	1	13	400m§	1 0m	90		175A	DO7
98▼	1N5739B	5	13	400m	5 0m	30	8.0	200J	DO35
99#	1S2130	10	13	40	5 0m	90	7 0	150A	A1
100#	1S2130A	5	13	.40	5 0m	75	7.0	150A	A1
101	1S7130,B	x15	13	40	5 0m	90	7 0	150A	A1
102	1S7130A	5	13	40	5 0m	75	7 0	150A	A1
103#	5523	5	13	.40	5 0m	25	6 5	125A	A1ce
104#	BZX46C13	5	13	400m	9 5	13	7 0	175J	DO35
105#	BZX55C13	5	13	400m	5 0m	26	6.5	150J	DO35
106▼#	BZX71B13	2	13	400m§	5 0m	30		175J	DO35
107#	BZX71C13	5	13	400m§	5 0m	30		200S	A9m
108#	BZX79C13	5	13	400m	5 0m	30	105	200J	A257
109#	BZX83C13	5	13	400m	5.0m	25	6 5	150J	DO35
110▼#	BZY85B13	2	13	400m	5.0m	30	6.8	150J	DO7
111#	BZY88C13	5	13	40	5.0m	35		175J	DO7
112#	BZY94C13	5	13	.40				150J	DO7
113	C4019	10	13	.40	9 5m	13		175	A134a
114	C6019	10	13	400m	1 0m	35 Ø	6.7	175A	M371c
115	C6019A	5	13	400m	1.0m	35 Ø	6 7	175A	M371c
116	C6119	10	13	400m	1 0m	35	6.7	175A	M131a
117	C6119A	5	13	400m	1 0m	35	6 7	175A	M131a
118	CZA13D,10,5	xxx	13	40 Ø	250u	200	6 5	175J	M371
119	CZB13D,10,5	xxx	13	40 Ø	4.8m	18	6.5	175J	M371
120	CZC13D,10,5	xxx	13	.40 Ø	9.5m	13	6 5	175J	M371
121	CZD013,-5	xx	13	40	10m	10		175	DO7
122	CZD13D,10,5	xxx	13	40 Ø	250u	200	6.5	175J	M451
123	CZE13D,10,5	xxx	13	.40 Ø	9.5m	13	6.5	175J	M451
124	HM13,A,B	xxx	13	400m§	9.5m	13		175A	A196c
125#	KS130A	5	13	400m	5 0m	75	11 △	150A	DO7
126#	LR130CH	5	13	40	5 0m	50	6.6	150S	DO7
127	M4Z13,A,-20	xx*	13	.40	9 5m	13		150A	A1kk
128#	M13Z	5.0	13	400m	5 0m	25	7.0	150A	DO7
129	MACZA13D,10,5	xxx	13	40 Ø	250u	200	6.5	175J	M453
130	MACZC13D,10,5	xxx	13	.40 Ø	9 5m	13	6 5	175J	M453
131	MACZD13D,10,5	xxx	13	40 Ø	250u	200	6.5	175J	M453
132	MACZE13D,10,5	xxx	13	40 Ø	9 5m	13	6 5	175J	M453
133	MBCZA13D,10,5	xxx	13	.40 Ø	250u	200	6 5	175J	M454
134	MBCZB13D,10,5	xxx	13	.40 Ø	4 8m	18	6.5	175J	M454
135	MBCZC13D,10,5	xxx	13	400mØ	9.5m	13	6 5	175J	M454
136	MBCZD13D,10,5	xxx	13	.40 Ø	250u	200	6.5	175J	M454
137	MBCZE13D,10,5	xxx	13	40 Ø	9 5m	13	6.5	175J	M454
138	MCCZA13D,10,5	xxx	13	.40 Ø	250u	200	6 5	175J	M455
139	MCCZB13D,10,5	xxx	13	.40 Ø	4.8m	18	6.5	175J	M455
140	MCCZC13D,10,5	xxx	13	40 Ø	9 5m	13	6 5	175J	M455
141	MCCZD13D,10,5	xxx	13	.40 Ø	250u	200	6.5	175J	M455
142	MCCZE13D,10,5	xxx	13	.40 Ø	9 5m	13	6.5	175J	M455
143	MDCZA13D,10,5	xxx	13	.40 Ø	250u	200	6.5	150A	M410
144	MDCZB13D,10,5	xxx	13	.40 Ø	4.8m	18	6 5	150A	M410
145	MDCZC13D,10,5	xxx	13	40 Ø	9 5m	13	6.5	150A	M410
146	MDCZD13D,10,5	xxx	13	.40 Ø	250u	200	6 5	150A	M410
147	MDCZE13D,10,5	xxx	13	.40 Ø	9 5m	13	6 5	150A	M410
148	MZ500-19	10	13	.4 §	9 5m	15 Ø	7 9	175J	DO7
149	MZC13A10	†	13	400m§	3 8m	74	7.9	175J	M468
150	MZC13B10	§†	13	400m§	250u	200		175J	M468
151	WZ536	5	13	40	5 0m	15		150A	A31e
152#	Z5A13	1	13	400m§	5.0m	40	8 0 △	200J	A1hs
153#	Z5B13	5	13	400m§	5 0m	40	8.0 △	200J	A1hs
154#	Z5C13	10	13	400m§	5.0m	40	8.0 △	200J	A1hs
155#	Z5D13	15	13	400m§	5 0m	40	8.0 △	200J	A1hs
156#	ZF13	5	13	400m	5 0m	25	8 0	150J	DO7
157#	ZP13#	5	13	400m	5 0m	25	8 0	150J	DO7
158	1/2Z13T5	5	13	50	9.5m	10		175	A94f
159	1N5243	20†	13	50	9.5m			200A	DO7
160	1N5243A,B	§Ø	13	50	9 5m	13	7 9	200A	DO7
161	MTZ617,A	xx	13	.50	5 0m	27		175A	A60e
162	MZ92-13	†	13	500m§	9 5m		7 2	150J	C103
163	PS8916	5	13	50	10m	8.0	8.0	150	A60p
164	S5243,A,B	xxx	13	500m	9.5m	13	7.9	175	DO41
165#	ZSF13	1	13	500m	7 0m	10	1 0	150S	M487a
166#	ZOA13	1	13	520m	5.0m	15	8 0 △	150J	A1ef
167#	ZOB13	5	13	520m	5.0m	15	8.0 △	150J	A1ef
168#	ZOC13	10	13	520m	5 0m	15	8.0 △	150J	A1ef
169#	ZOD13	15	13	520m	5.0m	15	8 0 △	150J	A1ef
170	1N4635	5	13	60	9.5m	700	7.9	200A	DO14
171#	NT0.6C13	5	13	600m	5 0m	25		125J	M498
172#	UZ13	10	13	.60	46m	7.0	7.5	135A	DO3
173#	ZC013	5	13	.60	1 0m	50	6.0	100	A3k
174#	ZD013	10	13	.60	1.0m	50	6.0	100	A3k
175#	ZW13	5	13	600m	5 0m	25	8 0	150J	A1bg
176	7JZ13	†	13	750m	9 5m	13	6.5	175	DO15
177	.7Z13,A,B,D	xxxx	13	750m	9 5m	13	6 5	175	DO27
178	.7Z13C	Ø	13	750m	9 5m	13	6.5	175	DO27
179	.7ZM13,A,B,D	xxxx	13	750m	9 5m	13	6.5	175	DO41
180	.7ZM13C	Ø	13	750m	9 5m	13	6.5	175	DO41
181	1N2037-2	5	13	.75	5 0m	70	7 0	150J	DO12
182	1N3682	20	13	750m	9.5m	13	6.5	175S	A1az
183	1N3682A	10	13	750m	9.5m	13	6 5	175S	A1az
184	1N3682B	5	13	750m	9 5m	13	6 5	175S	A1az
185	MC6117,A	xx	13	.75	10m	27		175A	A2d
186	MMZ13,A,-20	xx*	13	75	9 5m	13		150A	A1kk
187	MZ13T20,10,5	xxx	13	75	12m	13	7.5	165A	A152
188	SV1018	5	13	750m	5.0m	70 Ø	6 9	150	A82f
189	WZ918	5	13	75	5.0m	70 Ø		150A	A1fw

SYMBOLS AND CODES EXPLAINED IN INTERPRETER

2. SILICON REFERENCE DIODES

IN ORDER OF (1) REF. VOLTAGE, (2) DISSIPATION, and (3) TYPE No.

LINE No.	3 TYPE No.	TOLERANCE 20 10 5 2 ± (%)	NOM. REF. VOLT. (V)	2 MAX. DISS. @ 25°C (W)	TEST CUR. Izt (A)	MAX. DYN. IMP. (Ω)	TEMP. COEFF Tc	MAX. TEMP (°C)	DWG. No.
1	1A13M,A,B	xxx	13	1.0	19m	10		75A	DO15
2	1E13Z,10,5	xxx	13	1 0	19m	10	6 5	150A	A52g
3	1M13Z,10,5	xxx	13	1.0	19m	10	6 5	175S	DO1
4	1N1774,A	xx	13	1 0	50m	5 8		175S	DO13
5	1N3023	20	13	1 0	19m	10		175A	A31a
6	1N3023A	10	13	1 0	19m	10		175A	A31a
7	1N3023B	5	13	1 0	19m	10		175A	A31a
8	JAN1N3023B	5	13	1 0	19m	10	7 9	175A	A31c
9	1N4165	20	13	1 0	19m	10	6.5	175	DO29
10	1N4165A	10	13	1 0	19m	10	6 5	175	DO29
11	1N4165B	5	13	1 0	19m	10	6 5	175	DO29
12	1N4330,A,B	xxx	13	1 0	19m	10	6 5	300S	DO7
13♦	1N4407	20	13	1 0	19m	5 0		175S	A266a
14	1N4407A	10	13	1 0	19m	5 0	6 5	175A	A1cm
15	1N4407B	5	13	1 0	19m	5 0	6 5	175A	A1cm
16	1N4664	5	13	1 0	19m	450	7 9	200A	DO15
17	1N4743	10	13	1 0	19m	10		200A	A1ay
18	1N4743A	5	13	1 0	19m	10		200A	A1ay
19	1N5566	20	13	1 0 §	19m			200A	A196d
20	1N5566A	10	13	1 0 §	19m	10		200A	A196d
21	1N5566B	5	13	1 0 §	19m	10		200A	A196d
22	1N5636		13	1 0	1 0m		8 1	175A	DO13
23	1N5636A		13	1 0	1 0m		8 1	175A	DO13
24	1R13,A,B	xxx	13	1.0	19m	10	6 5	175A	A52c
25#	1S228	10	13	1 0	25m	9 0		150J	A56a
26#	1S3013	xx	13	1 0	20m	10	7.0	150	A3
27	1Z13,A,B	xxx	13	1 0	19m	10		150	A1ay
28	1Z13T20,10,5	xxx	13	1 0	15m	15	7.5	165A	A89c
29#	1ZC13T10,5	xx	13	1 0	15m	17	7 5	165A	A31p
30#	26Z6F,AF	12,6	13	1 0	10m	24	8 0	150J	DO13
31	AV2013	∅2	13	1 0	50m	6 0		150A	A19
32▼#	BZ130	5	13	1 0	20m	10	7 1	175J	A60t
33#	BZX29C13	5	13	1 0	20m	10	6 5	175J	A1cd
34#	BZX61C13	5	13	1.0	20m	10	5 0	175J	A3y
35♦	BZX85C13	5	13	1 0	20m	10	7 5	150A	DO15
36	CD31-00016	5	13	1 0	19m	10	7 5	200A	A1ce
37	CD31-12023	5	13	1 0	19m	10		200A	A1ce
38	CD32-12053	5	13	1 0	19m	10			
39	CZ13,A,B,D	xxxx	13	1 0	40m	15	6 5	175	DO15
40	CZ13C	∅	13	1 0	40m	15	6 5	175	DO15
41	EVR13,A,B	xxx	13	1 0	19m	18		175A	DO27
42	G13T20,10,5	xxx	13	1 0	19m	10		175	DO15
43#	GZ13	5	13	1 0	25m	30 △		150A	S115
44▼	HEP605-RT	5	13	1 0	19	10			DO41
45	HW13,A,B	xxx	13	1.0	19m	10		175	A196
46	JZ13,A,B,D	xxxx	13	1 0	19m	10	6 5	175	DO15
47	JZ13C	∅	13	1 0	19m	10	6 5	175	DO15
48	LPM13,A,-20	xx*	13	1 0	19m	10		150A	A1kk
49	PS10023B	5	13	1 0	19m	10		175A	C18g
50	PS10067	5	13	1 0	19m	8 0	8 2	150	A60p
51	SZ13 0	xxxx	13	1 0	20m	9.0 ∅	7 0	150A	A3g
52	TZ13,A,B,D	xxxx	13	1 0	40m	15	6 5	175	DO27
53	TZ13C	∅	13	1 0	40m	15	6 5	175	DO27
54	UZ8713	5	13	1 0	21m	10	7 0	175	A146h
55	UZ8813	10	13	1 0	21m	10	7 0	175	A146h
56	VR13,A,B	xxx	13	1 0	19m	10		125A	A1b
57	Z2A130F	20§∅	13	1 0	20m	43	7 5	100J	A141
58#	Z4A13	1	13	1 0	50m	8 0	8 0 △	150J	A1ef
59#	Z4B13	5	13	1 0	50m	8 0	8 0 △	150J	A1ef
60#	Z4C13	10	13	1.0	50m	8 0	8.0 △	150J	A1ef
61#	Z4D13	15	13	1.0	50m	8 0	8 0 △	150J	A1ef
62	Z13,A,B,D	xxxx	13	1 0	19m	10	6 5	175	DO27
63	Z13C	∅	13	1.0	19m	10	6 5	175	DO27
64	ZA13,A,B	xxx	13	1 0	19m	10		150C	A1ew
65	ZB13#	†	13	1 0 §	19m	10		150A	A1bc
66	ZD13∅,A,B	xxx	13	1.0	19m	9 0	6.5	175A	A1cm
67	ZH13,A,B	xxx	13	1 0	19m	10	6.5	175A	DO1
68	ZM13,A,B,D	xxxx	13	1 0	19m	10	6.5	175	DO41
69	ZM13C	∅	13	1 0	19m	10	6 5	175	DO41
70#	7723	5	13	1 1	50m	7 0	6.5	125A	A1bu
71#	BZY92C13	5	13	1 1	50m	11	6 0	150J	DO13
72	1N4835,A,B	xxx	13	1.2	19m	15	7 9	175	DO29
73#	BZX67C13	5	13	1 3	50m	10	6 0	150J	S287
74#	ZD13#	5	13	1 3	50	10	6 0	150J	DO13
75#	ZY13	5	13	1 3	50	10	6 0	150J	A1bg
76▼	1N3792	20	13	1 5	29m	8 0	7 9	175S	C14∅
77▼	1N3792A	10	13	1 5	29m	8 0	7 9	175S	C14∅
78▼	1N3792B	5	13	1 5	29m	8 0	7 9	175S	C14∅
79	1N4468	5	13	1 5	19m	8 0		175A	A196
80	JAN1N4468	10	13	1 5	19m	8 0	7.9	175A	A1v
81#	1S4013,A	xx	13	1 5	20m	4 6	7 0	150A	DO1
82	1 5DKZ15,A,B	xxx	13	1 5	29m	8 0		175A	DO27
83	1 5JZ13,A,B,D	xxxx	13	1 5	29m	8 0	7 9	175	DO15
84	1 5JZ13C	∅	13	1 5	29m	8 0	7 9	175	DO15
85	1.5R13,A,B	xxx	13	1 5	29m	8 0	6 5	175A	A52c
86	1 5Z13,A,B,D	xxxx	13	1 5	29m	8.0	7 9	175	DO27
87	1.5Z13C	∅	13	1 5	29m	8 0	7.9	175	DO27
88#	BZY95C13	5	13	1 5	50m	6.0	8 5	175J	DO1
89	MC6317,A	xx	13	1 5	75m	25			A1q
90	MZ1000-16	10	13	1 5 §	19m	15 ∅	7 9	175J	A1ay
91#	SZ13C	5	13	1 5	20m	40	7 0	160A	A26
92#	Z2A13	1	13	1 5	50m	7.0	8 0 △	150J	A244
93#	Z2B13	5	13	1 5	50m	7.0	8 0 △	150J	A244
94#	Z2C13	10	13	1 5	50m	7 0	8 0 △	150J	A244
95#	Z2D13	15	13	1 5	50m	7 0	8.0 △	150J	A244
96#	Z3A13	1	13	1 5	100m	6 0	8.0 △	150J	S4f
97#	Z3B13	5	13	1 5	100m	6 0	8.0 △	150J	S4f
98#	Z3B130CF	20§∅	13	1 5	20m	10	7 5	175J	DO1
99#	Z3C13	10	13	1 5	100m	6 0	8 0 △	150J	S4f
100#	Z3D13	15	13	1 5	100m	6 0	8.0 △	150J	S4f
101#	66Z6,A	12,6	13	1.8	100m	20	1.1	150J	DO4
102#	ZC2013	5	13	1 8	1 0m	50	6.0	150	DO3
103#	ZD2013	10	13	1 8	1 0m	48	5.8	150	DO3
104	2R13,A,B	xxx	13	2.0	38m	8 0	6.5	175A	DO27
105	2VR13,A,B	xxx	13	2 0	38m	8 0			A3e
106	LMZ13,A,-20	xx*	13	2.0	38m	5.0		150A	A1kk
107	ZBC13	†	13	2 0 §	38m	6 0		150A	A1bc
108#	VR13F	5	13	2.2	20m	12		200S	DO3
109	1N5023	10	13	2.5	48m	4.8	6.5	150	A1gn
110	1N5023A	5	13	2.5	48m	4.8	6.5	150	A1gn
111	1N5069	5	13	3 0	50m	6 0		175A	A146j
112	3R13,A,B	xxx	13	3 0	57m	5 0	6 5	175A	A1rw
113	3TZ13,A,B,D	xxxx	13	3 0	75m	5.0	7 5	175	A1ec
114	3TZ13C	∅	13	3.0	75m	5 0	7 5	175	A1ec
115	3VR13,A,B	xxx	13	3 0	57m	5 0			A222
116	CZ5069	10	13	3 0	50m	6.0	85	175A	A196e
117	M3Z13,A	xx	13	3 0	56m	6.2		150A	A1kk
118	MZ713	5	13	3 0	50m	6 0	7 0	175A	A146j
119	MZ813	10	13	3.0	50m	6.0	7 0	175A	A146j
120	MZ913	20	13	3 0	50m	6 0	7 0	175A	A146j
121#	NT3C13	5	13	3 0	5 0m	50		125J	S43a
122	UZ713	5	13	3 0	50m	6 0	7 0	175A	A146f
123	UZ813	10	13	3.0	50m	6.0	7.0	175A	A146f
124	UZ913	20	13	3 0	50m	6 0	7 0	175A	A146f
125	ZAC13,A,B	xxx	13	3 0	19m	10		150C	A1ey
126	ZCC13	†	13	3 0 §	50m	6 0		150A	A1ey
127	3T13,A,B	xx*	13	3 5	50m	5 8			DO4
128	3Z13T20,10,5	xxx	13	3.5	50m	6 4	7 5	165	DO4
129	1N4021,A,B	xxx	13	5 0	95m	3 0	7.9	180A	S82
130	1N4961	5	13	5 0	100m	3 0		175A	A146m
131	JAN1N4961	5	13	5 0	100m	3 0	8 0	175A	A248f
132♦	1N5350	20	13	5 0	100m			200A	A1ee
133▼	1N5350A	10	13	5.0	100m	2 5		200A	A1ee
134▼	1N5350B	5	13	5 0	100m	2 5		200A	A1ee
135▼	5ZS13,A,B	xxx	13	5 0 §	100m	2 5		200A	A1ts
136▼	CTZC13,A,B,D∅	xxxx	13	5 0 §	100m	2 5 ∅	6 5	175A	A1ey
137▼	CTZC13C∅	1	13	5 0 §	100m	2 5 ∅	6 5	175A	A1ey
138▼	CTZC13E∅	3	13	5 0 §	100m	2 5 ∅	6 5	175A	A1ey
139	DSZ5713	5	13	5 0	100m	3 0	8.0	175A	A60r
140	DSZ5813	10	13	5 0	100m	3 0	8 0	175A	A60r
141	MZ5713	5	13	5 0	100m	3 0	7 0	175A	A60f
142	MZ5813	10	13	5.0	100m	3 0	7 0	175A	A60f
143	MZ5913	20	13	5 0	100m	3 0	7 0	175A	A60f
144▼	TZC13,A,B,D	xxxx	13	5.0 §	100m	2.5 ∅	6 5	175A	A1ey
145▼	TZC13C	1	13	5 0 §	100m	2 5 ∅	6 5	175A	A1ey
146▼	TZC13E	3	13	5 0 §	100m	2.5 ∅	6.5	175A	A1ey
147▼	UZ5713	5	13	5 0	100m	3.0	8 0	175A	A146m
148♦	UZ5813	10	13	5 0	100m	3 0	8 0	175A	A146m
149	UZ5913	20	13	5 0	100m	3.0	7 0	175A	A146m
150	ZC13	†	13	5 0 §	100m	2 5		150A	A1ey
151#	VR13E	5	13	5 8	20m	12		200S	DO4
152	UZ4713	5	13	8 0	100m	3.0		175A	A146m
153	UZ4813	10	13	8 0	100m	3 0		175A	A146m
154	1N1354,A	xx	13	10	500m	2 0		175A	DO4
155	1N1354B	20	13	10	500m	2 0			S11e
156	1N1354C,CA∅	xx	13	10 §	50	2 0		175J	S19a
157	1N1816§	10	13	10	500m	2 0	7 0	150A	S19a
158	1N1816A§	5	13	10	500m	2 0	7 0	150A	S19a
159	1N1816C,CA∅	xx	13	10	500m	2 0	7 0	150A	S19a
160	1N2046-2	5	13	10	500m	2 0	7.0	150J	DO4
161	1N2977,A,B	xxx	13	10	190m	3 0		175C	DO4∅
162	JAN1N2977B,RB	5	13	10	190m	3 0	7 9	150C	DO4
163	1N4265	20	13	10	190m	3 0	6 5	175C	S134
164	1N4265A	10	13	10	190m	3 0	6 5	175C	S134
165	1N4265B	5	13	10	190m	3 0	6.5	175C	S134
166	JAN1N4265B	5	13	10 §	190m	3 0	7 9	175S	S134a
167#	1S270	10	13	10	250m	3 0		150J	S19g
168#	1S6013	10	13	10	200m	4 0	5 5	150	DO4
169#	1S6013A	5	13	10	200m	2 5	5 5	150	DO4
170	10PZ13,A,B,D	xxxx	13	10	190m	3 0	6 5	175	DO4
171	10PZ13C	∅	13	10	190m	3 0	6 5	175	DO4
172	10RZ13,A,B,D	xxxx	13	10	500m	2.0	7 0	155	DO4
173	10RZ13C	∅	13	10	500m	2 0	7 0	155	DO4
174	10Z13T20,10,5	xxx	13	10	170m	3 7	7 5	165	DO4
175	AV8013	∅2	13	10	500m	2 0		150A	S11
176#	CC4013	5	13	10	15m	15	4 8	150	S19
177#	CD4013	10	13	10	15m	15	4 8	150	S19
178#	OAZ231	5	13	10	20m	33		150J	DO4
179	UZ7713	5	13	10	200m	1 5	7 0	175	S277∅
180	UZ7813	10	13	10	200m	1 5	7.0	175	S277∅
181	UZ7913	20	13	10	200m	1.5	7 0	175	S277∅
182#	Z5D130CF	20§∅	13	10	50m	2.5	6.5	150J	DO4
183#	ZC5013	5	13	10	200m	2.5	5 6	150A	S19
184#	ZD5013	10	13	10	200m	2.5	5 6	150A	S19
185#	BZZ23	5	13	13	20m	6.3	10	150	DO4
186#	BZY93C13	5	13	20 §	1	1.0	8 5	175J	DO4∅
187#	86Z6,A	12,6	13	25	400m	3.8	8 0	150J	S179
188#	ZX13	5	13	25 ∅	50	10	6 0	150J	M41
189	1N2811,A,B	xxx	13	50	960m	1 1	6 5	175S	C5a
190	JAN1N2811B,RB	5	13	50	960m	1 1	7 9	150C	C5a
191	1N3312	20	13	50	960m	1 1	6.5	175J	DO5
192	1N3312A	10	13	50	960m	1 1	6 5	175J	DO5
193	1N3312B	5	13	50	960m	1 1	6 5	175J	DO5
194	JAN1N3312B,RB	5	13	50	960m	1 1	7 9	150	DO5
195	50T13,A,B	xx*	13	50	960m	1 1	6 5		S19e
196	AV51013	5	13	50	960m	1 1	6 5	150C	C5a
197#	BZY91C13	5	13	75 §	2	50	9 0	175J	DO5∅
198#	ZC713△	5	13	100 §	100	2 0	6 4	175J	S125d∅
199	LID13,A	xx	13	400	9 1m	13		150A	M401
200#	BZX70C13	5	13 2	2 5	50m	6 0	85	150J	A171b
201#	1113	10∅	13.5	25	5 0m	55	7 0	150J	C18f

SYMBOLS AND CODES EXPLAINED IN INTERPRETER

2. SILICON REFERENCE DIODES

IN ORDER OF (1) REF. VOLTAGE, (2) DISSIPATION, and (3) TYPE No.

LINE No	3 TYPE No	TOLERANCE 20 10 5 2 ± (%)	NOM. REF. VOLT. (V)	2 MAX. DISS. @ 25°C (W)	TEST CUR Izt (A)	MAX. DYN. IMP (Ω)	TEMP. COEFF Tc	MAX. TEMP (°C)	DWG No
1#	BZY83C13V5	5	13 5	25	5 0m	30	9 △	150J	C1g
2#	HS2135	5	13.5	25	5 0m			175A	DO7
3#	HS7135	5	13 5	40	5.0m			175A	DO7
4#	1313	10∅	13 5	5 0	40m	6 0	7 0	150J	A9h
5#	1213	10∅	13 5	15	200m	3 0	7 0	150J	S87
6#	4223	10∅	13 5	15	200m	1 0		150J	S87
7#	4323	10∅	13 5	30	200m	1.0		150J	S87
8#	4423	10∅	13 5	30	200m	1 0		150J	S87
9#	4523	10∅	13.5	100	340m	80		150J	S87
10#	4623	10∅	13 5	100	340m	80		150J	S87
11	1N2766	5	13 6		7.5m	40	50	175A	A1gd
12	1N2766A	5	13 6		7 5m	40	25	175A	A1gd
13#	ZS14	5	13 8		5 0m	80	500m	150A	C3c
14	1N2046C	5	14		500m	2 0		150A	S19a
15	DSZ3014	10	14		50m	6 0	7 0		A266
16	MACZE14D,10,5	xxx	14	400n∅	9 0m	14	7 0	175J	M453
17	1/4A14,A,B	xxx	14	25	4.5m	20	7 0	175	DO7
18	1/4M14Z,10,5	xxx	14	250m	4 5m	20	7 1	175J	A1cy
19	25N14	20	14	25	4 5m	20		250	DO7
20	1N766-3	5	14	25	5 0m	55	7 0	150	DO7
21	1N4108	5	14	25	25m	200		200J	DO7
22	1N4701	5	14	25	05m			200A	DO14
23#	1S474	10	14	25	10m	35	7 5	150J	DO7
24#	MZ1014	8	14	250m	50m	35	8 0	175J	DO7
25	SV137	5	14	25	5 0m	50	7 2	150	DO7
26#	SZ14	5	14	25	5 0m	65	83	150J	C1f
27	JAN1N4108	5	14	400m	250u	200	8 5	175A	A1sx
28	1N5534	20	14	400m§	1 0m			175A	DO7
29	1N5534A	10	14	400m§	1 0m			175A	DO7
30	1N5534B	5	14	400m§	1 0m	100		175A	DO7
31▼	JAN1N5534B	5	14	400m	1 0m	100	8 2	200A	DO14
32	1N5534C	2	14	400m§	1 0m	100		175A	DO7
33	1N5534D	1	14	400m§	1 0m	100		175A	DO7
34	CZA14D,10,5	xxx	14	40 ∅	250u	200	7 0	175J	M371
35	CZB14D,10,5	xxx	14	40 ∅	4.5m	20	7 0	175J	M371
36	CZC14D,10,5	xxx	14	400m∅	9 0	14	7 0	175J	M371
37	CZD014,-5	xx	14	40	6 0m	10		175	DO7
38	CZD14D,10,5	xxx	14	40 ∅	250u	200	7 0	175J	M451
39	CZE14D,10,5	xxx	14	400m∅	9 0	14	7 0	175J	M451
40	MACZA14D,10,5	xxx	14	40 ∅	250u	200	7 0	175J	M453
41	MACZB13D,10,5	xxx	14	400m∅	9 0m	14	7 0	175J	M453
42	MACZB14D,10,5	xxx	14	40 ∅	4 5m	20	7 0	175J	M453
43	MACZC14D,10,5	xxx	14	400m∅	9 0m	14	7 0	175J	M453
44	MACZD14D,10,5	xxx	14	40 ∅	250u	200	7 0	175J	M453
45	MBCZA14D,10,5	xxx	14	40 ∅	250u	200	7 0	175J	M454
46	MBCZB14D,10,5	xxx	14	40 ∅	4 5m	20	7 0	175J	M454
47	MBCZC14D,10,5	xxx	14	400m∅	9 0m	14	7 0	175J	M454
48	MBCZD14D,10,5	xxx	14	40 ∅	250u	200	7 0	175J	M454
49	MBCZE14D,10,5	xxx	14	400m∅	9 0m	14	7 0	175J	M454
50	MCCZA14D,10,5	xxx	14	40 ∅	250u	200	7 0	175J	M455
51	MCCZB14D,10,5	xxx	14	40 ∅	4.5m	20	7 0	175J	M455
52	MCCZC14D,10,5	xxx	14	400m∅	9 0m	14	7 0	175J	M455
53	MCCZD14D,10,5	xxx	14	40 ∅	250u	200	7 0	175J	M455
54	MCCZE14D,10,5	xxx	14	400m∅	9 0m	14	7 0	175J	M455
55	MDCZA14D,10,5	xxx	14	40 ∅	250u	200	7 0	150A	M410
56	MDCZB14D,10,5	xxx	14	40 ∅	4 5m	20	7 0	150A	M410
57	MDCZC14D,10,5	xxx	14	400m∅	9 0m	14	7 0	150A	M410
58	MDCZD14D,10,5	xxx	14	40 ∅	250u	200	7 0	150A	M410
59	MDCZE14D,10,5	xxx	14	400m∅	9 0	14	7 0	150A	M410
60	MZC14A10	†	14	400m§	3 6m	33	8 2	175J	M468
61	MZC14B10	§†	14	400m§	250u	200		175J	M468
62	WZ537	5	14	40	5 0m	15		150A	A31e
63	1N5244	20†	14	50	9 0m			200A	DO7
64	1N5244A,B	§∅	14	50	9 0m	15	8.2	200A	DO7
65	MZ92-14	†	14	500m§	9 0m		7 4	150J	C103
66	S5244,A,B	xxx	14	500m	9 0m	15	8 2	175	DO41
67	7JZ14	†	14	750m	9 0m	15	7 0	175	DO15
68	7Z14,A,B,D	xxxx	14	750m	9 0m	15	7 0	175	DO27
69	7Z14C	∅	14	750m	9 0m	15	7 0	175	DO27
70	7ZM14,A,B,D	xxxx	14	750m	9 0m	15	7 0	175	DO41
71	7ZM14C	∅	14	750m	9 0m	15	7 0	175	DO41
72	1N2037-3	5	14	75	5 0m	70	7 0	150J	DO12
73	SV1019	5	14	75	5.0m	70 ∅	7 2	150	A82f
74	WZ919	5	14	75	5 0m	70 ∅		150A	A1fw
75	1E14Z,10,5	xxx	14	1 0	18m	12	7 0	150A	A52g
76	1M14Z,10,5	xxx	14	1 0	18m	12	7 0	175S	DO1
77#	1S229	10	14	1 0	25m	11		150J	A56a
78#	1S484	10	14	1 0	30m	35	7 5	150J	A115
79#	27Z6F,AF	12,6	14	1 0	10m	50	8 0	150J	DO13
80	AV2014	∅2	14	1 0	50m	9 0		150A	A19
81▼#	BZ140	5	14	1 0	20m	12	7 3	175J	A60t

LINE No	3 TYPE No	TOLERANCE 20 10 5 2 ± (%)	NOM REF VOLT. (V)	2 MAX. DISS. @ 25°C (W)	TEST CUR. Izt (A)	MAX. DYN. IMP. (Ω)	TEMP. COEFF Tc	MAX. TEMP (°C)	DWG. No.
82	CZ14,A,B,D	xxxx	14	1 0	40m	15	7 0	175	DO15
83	CZ14C	∅	14	1 0	40m	15	7 0	175	DO15
84	EVR14,A,B	xxx	14	1 0	18m	20		175A	DO27
85▼	HEP606-RT	5	14	1 0	18	12			DO41
86	IDA1Z14,A,B,C∅	xxxx	14	1.0	25m			200A	A1ht
87	JZ14,A,B,D	xxxx	14	1 0	18m	12	7 0	175	DO15
88	JZ14C	∅	14	1 0	18m	12	7 0	175	DO15
89	TZ14,A,B,D	xxxx	14	1.0	40m	15	7 0	175	DO27
90	TZ14C	∅	14	1 0	40m	15	7 0	175	DO27
91	UZ8714	5	14	1 0	19m	12	7.0	175	A146h
92	UZ8814	10	14	1 0	19m	12	7.0	175	A146h
93	VR14,A,B	xx*	14	1 0	12m	12	7 0	125C	A1ex
94	Z4X14B,A	xx	14	1 0	50m	6 6	7 7	175A	DO13
95	Z4XL14,B	xx	14	1 0	20m	30	7 7	165A	DO13
96	Z14,A,B,D	xxxx	14	1 0	18m	12	7 0	175	DO27
97	Z14C	∅	14	1 0	18m	12	7 0	175	DO27
98	ZM14,A,B,D	xxxx	14	1 0	18m	12	6 5	175	DO41
99	ZM14C	∅	14	1 0	18m	12	6 5	175	DO41
100	1 5JZ14,A,B,D	xxxx	14	1.5	27m	9 0	8 1	175	DO15
101	1 5JZ14C	∅	14	1.5	27m	9 0	8 1	175	DO15
102	1 5M14Z,10,5	xxx	14	1 5	26m	9 0	7 0	175S	C12
103	1 5Z14,A,B,D	xxxx	14	1 5	27m	9 0	8 1	175	DO27
104	1.5Z14C	∅	14	1.5	27m	9.0	8.1	175	DO27
105#	67Z6,A	12,6	14	1 8	100m	40	1 5	150J	DO4
106	2VR14,A,B	xx*	14	2 0	12m	11			A3e
107	LMZ14A	5	14	2 0	35m	5 5	8 0	150A	A1kk
108	ZBC14	†	14	2 0 §	35m	6 0		150A	A1bc
109	1N5024	10	14	2 5	45m	5 4	7.0	150	A1gn
110	1N5024A	5	14	2 5	45m	5 4	7 0	150	A1gn
111	1N5070	5	14	3 0	50m	6 0		175A	A146j
112	1S494	10	14	3 0	80m	35	7 5	150J	S112
113	3TZ14,A,B,D	xxxx	14	3 0	75m	5.0	8 0	175	A1ec
114	3TZ14C	∅	14	3 0	75m	5 0	8.0	175	A1ec
115	CZ5070	10	14	3.0	50m	6 0	90	175A	A196e
116	MZ714	5	14	3 0	50m	6.0	7.0	175A	A146j
117	MZ814	10	14	3 0	50m	6 0	7 0	175A	A146j
118	MZ914	20	14	3.0	50m	6 0	7.0	175A	A146j
119	UZ714	5	14	3 0	50m	6.0	7.0	175	A60
120	UZ814	10	14	3 0	50m	6 0	7.0	175	A146f
121	UZ914	20	14	3 0	50m	6.0	7 0	175	A146f
122	ZCC14	†	14	3 0 §	50m	6 0		150A	A1ey
123	1N5118	5	14	5 0	100m	3 0		175A	A146m
124♦	1N5351	20	14	5 0	100m			200A	A1ee
125▼	1N5351A	10	14	5 0	100m	2.5		200A	A1ee
126▼	1N5351B	5	14	5 0	100m	2 5		200A	A1ee
127▼	5ZS14,A,B	xxx	14	5 0 §	100m	2.5		200A	A1ts
128▼	CTZC14,A,B,D∅	xxxx	14	5.0 §	100m	2 5 ∅	7 0	175A	A1ey
129▼	CTZC14C∅	1	14	5 0 §	100m	2.5 ∅	7 0	175A	A1ey
130▼	CTZC14E∅	3	14	5 0 §	100m	2.5 ∅	7 0	175A	A1ey
131	DSZ5714	5	14	5 0	100m	3 0	8 0	175A	A60r
132	DSZ5814	10	14	5 0	100m	3 0	8.0	175A	A60r
133	MZ5714	5	14	5 0	100m	3.0	7 0	175A	A60f
134	MZ5814	10	14	5 0	100m	3 0	7 0	175A	A60f
135	MZ5914	20	14	5.0	100m	3 0	7 0	175A	A60f
136▼	TZC14,A,B,D	xxxx	14	5 0 §	100m	2 5 ∅	7 0	175A	A1ey
137▼	TZC14C	1	14	5 0 §	100m	2 5 ∅	7.0	175A	A1ey
138▼	TZC14E	3	14	5 0 §	100m	2 5 ∅	7 0	175A	A1ey
139▼	UZ5714	5	14	5 0	100m	3 0	8 0	175A	A146m
140♦	UZ5814	10	14	5 0	100m	3.0	8 0	175A	A146m
141	UZ5914	20	14	5 0	100m	3 0 ∅	7 0	175A	A146m
142	ZC14	†	14	5 0 §	100m	2 5		150A	A1ey
143	1N2046-3	5	14	10	500m	2 0	7 0	150J	DO4
144	1N2978,A,B	xxx	14	10	180m	3.0	7 0	175S	DO4
145#	1S271	10	14	10	250m	3 0		150J	S19g
146	10PZ14,A,B,D	xxxx	14	10	180m	3 0	7 0	175	DO4
147	10PZ14C	∅	14	10	180m	3 0	7 0	175	DO4
148	AV8014	∅2	14	10	500m	3 0		150A	S11
149	UZ7714	5	14	10	175m	1 5	7 0	175	S277∅
150	UZ7814	10	14	10	175m	1 5	7 0	175	S277∅
151	UZ7914	20	14	10	175m	1 5	7 0	175	S277∅
152#	87Z6,A	12,6	14	25	400m	5 0	9 0	150J	S179
153	1N2812,A,B	xxx	14	50	890m	1 2	7 0	175S	C5a
154	1N3313	20	14	50	890m	1 2	7.0	175J	DO5
155	1N3313A	10	14	50	890m	1 2	7 0	175J	DO5
156	1N3313B	5	14	50	890m	1.2	7 0	175J	DO5
157	AV51014	5	14	50	890m	1 2	7.0	150C	C5a
158	250ZE14	10	14	250 §	10		8.0	190A	S83
159	250ZF14	10	14	250 §	10		8 0	190A	M56a
160#	1S338	13	14 3	.25	5 0m	55	8 0	150J	A1ce
161#	1S198	13	14.3	.40	10m	30	8 0	150J	A1ce
162▼	1N1961	10	14.5	400m	1 0m	50	8.8	150	DO7
163▼	1N1961A	5	14 5	400m	1 0m	50	8.8	150	DO7
164▼	1N1961B	1	14.5	400m	1 0m	50	8 8	150	DO7
165	AV6	10	14 5	1 0	50m	9 0		150A	A19
166	AV106	10	14 5	10	500m	3.0		150A	S11
167	TC14 6A5A	5△∅	14 6	1 0	10m	30	05	175A	A1ss
168	1N4058	5	14 6	1.5	10m	30	50	100	A1ss
169	1N4058A	5	14 6	1 5	10m	30	20	100	A1ss
170#	BZX70C15	5	14 7	2 5	50m	8.0	100	150J	A171b
171	1N2047A	5	15		500m	3 0		150A	S19a
172	DSZ3015	10	15		50m	6.0	7.0		A266
173	FA8009	5	15		10m	30	05	100	A1gd
174	FA8010	5	15		10m	30	10	100	A1gd
175	FA8011	5	15		10m	30	20	100	A1gd
176	FA8012	5	15		10m	30	50	100	A1gd
177#	RZ15	5	15	.08	2.0m	130		150A	C18e
178#	RZZ15	10	15	08	5.0m	160		150A	C18e
179	1N1988	10	15	150m	1 0m	50	8 8	150	C1
180	1N1988A	5	15	150m	1 0m	50	8 8	150	C1
181	1N1988B	1	15	150m	1 0m	50	8.8	150	C1
182#	AZ15∅	10	15	15	5 0m	55		170A	DO7
183#	Z15∅	5	15	150m	5.0m	110		150A	C18d

SYMBOLS AND CODES EXPLAINED IN INTERPRETER

2. SILICON REFERENCE DIODES

IN ORDER OF (1) REF. VOLTAGE, (2) DISSIPATION, and (3) TYPE No.

LINE No	3 TYPE No	TOLERANCE 1 20 10 5 2 ± (%)	NOM. REF. VOLT. (V)	2 MAX. DISS. @ 25°C (W)	TEST CUR. Izt (A)	MAX. DYN. IMP. (Ω)	TEMP. COEFF Tc	MAX TEMP (°C)	DWG. No.
1#	ZZ15∅	10	15	15	5 0m	130		150A	C18d
2	1N1934	10	15	200m	1 0m	50	8 8	150A	A82e
3	1N1934A	5	15	200m	1 0m	50	8 8	150A	A82e
4	1N1934B	1	15	200m	1 0m	50	8 8	150A	A82e
5#	RZ15A	10	15	20	270m	2 4	6 3	125A	DO5
6	ZS15	2	15	20	5 0m	30		140A	C74
7	1/4A15,A,B	xxx	15	25	4 2m	22	7 0	175	DO7
8	1/4M15Z,10,5	xxx	15	250m	4 2m	22	7 1	175J	A1cy
9	25N15	20	15	25	4 2m	22		250	DO7
10	1N718,A	xx	15	25	12m	13	7 2	175A	DO7
11	1N718B	20	15	25	12m	12			DO7
12	1N767-1	5	15	25	5 0m	70	8.0	150	DO7
13	1N4109	5	15	25	25m	200		200J	DO7
14	1N4702	5	15	25	05m			200A	DO14
15#	02Z15A	5	15	250m	5 0m	70	8 4	175J	DO35
16#	1115	10∅	15	25	5 0m	55	7 5	150J	C18f
17#	BZY83C15	5	15	25	5 0m	55	9 △	150J	C1g
18#	BZY83D15	10	15	25	5 0m	55	9 5 △	150J	C1g
19#	BZY85C15	5	15	25 §	5 0m	30	9 △	150J	A171f
20#	HS2150	5	15	25	5.0m			175A	DO7
21#	KS2150A	5	15	250m	5 0m	90	8 0 △	150A	DO7
22#	KS2150B	10	15	250m	5.0m	120	8 0 △	150A	DO7
23#	MR150C-H	5	15	25	5 0m	60		250	DO7
24#	MZ15A	10	15	25	6 8m	22	6 3	150A	DO7
25	PD6018,A	xx	15	25	1 0m	45		150	A109
26	PD6059	5	15	25	5 0m	15		150	A2c
27	SV138	5	15	25	5 0m	120	7 5	150	DO7
28#	SZ15	4	15	25	5 0m	80	81	150J	C1f
29	MC6018,A	xx	15	30	5 0m	32		175	A2m
30#	Z1D15	∅∅§§	15	3 §		50		150J	C29
31#	Z1A15	1	15	320m	5 0m	40	9 0 △	150A	C29
32#	Z1B15	5	15	320m	5 0m	40	9.0 △	150A	C29
33#	Z1C15	10	15	320m	5 0m	40	9.0 △	150A	C29
34	1N666	5	15	40	5 0m	24	7 0	200S	A31b
35	1N965,A,B	xxx	15	40	8 5m	16	7 0	175S	DO7
36	JAN1N965B	5	15	40	8 5m	16	8 2	175A	DO7
37	1N3522	5	15	40	5 0m	14	8 0	200A	DO7
38	JAN1N4109	5	15	400m	250u	100	8 5	175A	A1sx
39	1N5535	20	15	400m§	1 0m			175A	DO7
40	1N5535A	10	15	400m§	1 0m			175A	DO7
41	1N5535B	5	15	400m§	1 0m	100		175A	DO7
42▼	JAN1N5535B	5	15	400m	1 0m	100	8 2	200A	DO14
43	1N5535C	2	15	400m§	1 0m	100		175A	DO7
44	1N5535D	1	15	400m§	1.0m	100		175A	DO7
45▼	1N5740B	5	15	400m	5.0m	30	8 3	200J	DO35
46#	1S2150	10	15	40	5.0m	120	7 0	150A	A1
47#	1S2150A	5	15	40	5 0m	90	7 0	150A	A1
48#	1S7150,B	x15	15	40	5 1m	120	7 0	150A	A1
49#	1S7150A	5	15	40	5 0m	90	7 0	150A	A1
50#	5524	5	15	40	5 0m	30	7 0	125A	A1ce
51#	BZX46C15	5	15	400m	8 5	16	7 0	175J	DO35
52#	BZX55C15	5	15	400m	5 0m	30	7 0	150J	DO35
53▼#	BZX71B15	2	15	400m§	5 0m	35		175J	DO35
54#	BZX71C15	5	15	400m§	5 0m	35		200S	A9m
55#	BZX79C15	5	15	400m	5 0m	30	125	200J	A257
56#	BZX83C15	5	15	400m	5 0m	30	7 0	150J	DO35
57▼#	BZY85B15	2	15	400m	5 0m	35	7 0	150J	DO7
58#	BZY85D15	10	15	400m	5 0m	40	7 0	150J	A1su
59#	BZY88C15	5	15	.40	5 0m	40		175J	DO7
60#	BZY94C15	5	15	40				150J	DO7
61	C4020	10	15	40	8 5m	16		175	A134a
62	C6020	10	15	400m	1 0m	40 ∅	7 0	175A	M371c
63	C6020A	5	15	400m	1 0m	40 ∅	7 0	175A	M371c
64	C6120	10	15	400m	1 0m	40	7 0	175A	M131a
65	C6120A	5	15	400m	1 0m	40	7 0	175A	M131a
66	CZA15D,10,5	xxx	15	40 ∅	250u	200	7 0	175J	M371
67	CZB15D,10,5	xxx	15	40 ∅	4 2m	22	7 0	175J	M371
68	CZC15D,10,5	xxx	15	40 ∅	8 5m	16	7 0	175J	M371
69	CZD015,-5	xx	15	.40	6 0m	10		175	DO7
70	CZD15D,10,5	xxx	15	.40 ∅	250u	200	7.0	175J	M451
71	CZE15D,10,5	xxx	15	40 ∅	8.5m	16	7 0	175J	M451
72	HM15,A,B	xxx	15	400m§	8 5m	16		175A	A196c
73#	HS7150	5	15	40	5 0m			175A	DO7
74#	KS150A	5	15	400m	5 0m	90	11 △	150A	DO7
75#	KS150B	10	15	40	5 0m	100	11 △	150A	DO7
76#	LR150CH	5	15	40	5 0m	65	6 8	150S	DO7
77	M4Z15,A,-20	xx*	15	40	8 5m	16		150A	A1kk
78#	M15Z	5 0	15	400m	5 0m	30	7 0	150A	DO7
79	MACZA15D,10,5	xxx	15	40 ∅	250u	200	7 0	175J	M453
80	MACZB15D,10,5	xxx	15	40 ∅	4 2m	22	7 0	175J	M453
81	MACZC15D,10,5	xxx	15	40 ∅	8 5m	16	7 0	175J	M453
82	MACZD15D,10,5	xxx	15	40 ∅	250u	200	7 0	175J	M453
83	MACZE15D,10,5	xxx	15	40 ∅	8 5m	16	7 0	175J	M453
84	MBCZA15D,10,5	xxx	15	40 ∅	250u	200	7 0	175J	M454
85	MBCZB15D,10,5	xxx	15	.40 ∅	4 2m	22	7 0	175J	M454
86	MBCZC15D,10,5	xxx	15	400m∅	8 5m	16	7 0	175J	M454
87	MBCZD15D,10,5	xxx	15	40 ∅	250u	200	7 0	175J	M454
88	MBCZE15D,10,5	xxx	15	40 ∅	8 5m	16	7.0	175J	M454
89	MCCZA15D,10,5	xxx	15	40 ∅	250u	200	7 0	175J	M455
90	MCCZB15D,10,5	xxx	15	40 ∅	4 2m	22	7 0	175J	M455
91	MCCZC15D,10,5	xxx	15	40 ∅	8 5m	16	7.0	175J	M455
92	MCCZD15D,10,5	xxx	15	40 ∅	250u	200	7.0	175J	M455
93	MCCZE15D,10,5	xxx	15	40 ∅	8 5m	16	7 0	175J	M455
94	MDCZA15D,10,5	xxx	15	.40 ∅	250u	200	7 0	150A	M410
95	MDCZB15D,10,5	xxx	15	40 ∅	4.2m	22	7 0	150A	M410
96	MDCZC15D,10,5	xxx	15	40 ∅	8.5m	16	7.0	150A	M410
97	MDCZD15D,10,5	xxx	15	.40 ∅	250u	200	7 0	150A	M410
98	MDCZE15D,10,5	xxx	15	40 ∅	8 5m	16	7 0	150A	M410
99	MZ500-20	10	15	4 §	8.5m	20 ∅	8 2	175J	DO7
100	MZC15A10	†	15	400m§	3 3m	37	8 2	175J	M468
101	MZC15B10	§†	15	400m§	250u	100		175J	M468
102	WZ538	5	15	40	5.0m	20		150A	A31e
103#	Z5A15	1	15	400m§	5 0m	45	9 0 △	200J	A1hs
104#	Z5B15	5	15	400m§	5.0m	45	9 0 △	200J	A1hs
105#	Z5C15	10	15	400m§	5 0m	45	9.0 △	200J	A1hs
106#	Z5D15	15	15	400m§	5.0m	45	9.0 △	200J	A1hs
107#	ZF15	5	15	400m	5.0m	30	8 0	150J	DO7
108#	ZG15	10	15	400m	5.0m	55	8 0	150J	DO7
109#	ZP15#	5	15	400m	5 0m	30	8.0	150J	DO7
110	1/2Z15T5	5	15	50	8 5m	12		175	A94f
111	1N3404∅	10	15	50	10m	25	4 5	200A	P5
112	1N3417	10	15	50	1 0m	140	5 6	200A	P5
113	1N5245	20†	15	50	8.5m			200A	DO7
114	1N5245A,B	§∅	15	.50	8 5m	16	8 2	200A	DO7
115#	DZ15A	10	15	50	13m	24	6 3	150A	A100
116▼	HEPZ0225-RT	10	15	500m	8 5	34			C103
117	IDAZ3404,A,B,C∅	xxxx	15	500m	10m	25	4 5	200A	A1hc
118	MTZ618,A	xx	15	50	5 0m	32		175A	A60e
119	MZ92-15	†	15	500m§	8 5m		7 6	150J	C103
120	PS8917	5	15	50	10m	10	8 5	150	A60p
121	S5245,A,B	xxx	15	500m	8 5m	16	8 2	175	DO41
122#	Z0D15	15	15	50	30m	20	9 0	150J	A1ef
123#	ZSF15	1	15	500m	7 0m	10	1 0	150S	M487a
124#	Z0A15	1	15	520m	5 0m	15	9 0 △	150J	A1ef
125#	Z0B15	5	15	520m	5.0m	15	9 0 △	150J	A1ef
126#	Z0C15	10	15	520m	5.0m	15	9 0 △	150J	A1ef
127	1N4636	5	15	60	8.5m	700	8 2	200A	DO14
128#	NT0 6C15	5	15	600m	5 0m	30		125J	M498
129#	UZ15	10	15	60	40m	13	8 0	135A	DO3
130#	ZC015	5	15	60	1.0m	55	6 5	100	A3k
131#	ZD015	10	15	60	1.0m	55	6 5	100	A3k
132#	ZW15	5	15	600m	5.0m	30	8 0	150J	A1bg
133	ZZ15△	10	15	60	8.0m	10	7 0	175A	M222
134	7JZ15	†	15	750m	8 5m	16	7 0	175	DO15
135	7Z15,A,B,D	xxxx	15	750m	8 5m	16	7 0	175	DO27
136	7Z15C	∅	15	750m	8.5m	16	7 0	175	DO27
137	.7ZM15,A,B,D	xxxx	15	750m	8 5m	16	7 0	175	DO41
138	7ZM15C	∅	15	750m	8.5m	16	7.0	175	DO41
139	1N1514,A	xx	15	750m	10m	10	8 0	200S	DO12
140	1N2038A	5	15	75	5 0m	120	8 0	150J	DO12
141	1N3683	20	15	750m	8 5m	16	7 0	175S	A1az
142	1N3683A	10	15	750m	8 5m	16	7 0	175S	A1az
143	1N3683B	5	15	750m	8 5m	16	7 0	175S	A1az
144	MC6118,A	xx	15	75	10m	32		175A	A2d
145	MMZ15,A,-20	xx*	15	75	8.5m	16		150A	A1kk
146	MZ15T20,10,5	xxx	15	75	10m	16	8 0	165A	A152
147	SV1020	5	15	75	5.0m	120 ∅	7.5	150	A82f
148	WZ920	5	15	75	5 0m	120 ∅		150A	A1fw
149	1A15M,A,B	xxx	15	1 0	17m	14		75A	DO15
150	1E15Z,10,5	xxx	15	1 0	17m	14	7 0	150A	A52g
151	1M15Z,10,5	xxx	15	1 0	17m	14	7.0	175S	DO1
152	1N1525,A	xx	15	1 0	13m	13	8 0	200S	DO3
153	1N1775,A	xx	15	1 0	50m	7.6		175S	DO13
154	1N1878	10	15	1 0	25m	8 0	6 0	200C	A126
155	1N1878A	5	15	1 0	25m	8 0	6 0	200C	A126
156	1N1878B	1	15	1 0	25m	2 0 △	6 0	175A	DO13
157	1N3024	20	15	1.0	17m	14		175A	A31a
158	1N3024A	10	15	1 0	17m	14		175A	A31a
159	1N3024B	5	15	1 0	17m	14		175A	A31a
160	JAN1N3024B	5	15	1 0	17m	14	8 2	175A	A31c
161	1N4166	20	15	1 0	17m	14	7 0	175	DO29
162	1N4166A	10	15	1 0	17m	14	7 0	175	DO29
163	1N4166B	5	15	1 0	17m	14	7 0	175	DO29
164	1N4331,A,B	xxx	15	1 0	17m	14	7 0	300S	DO7
165♦	1N4408	20	15	1 0	17m	6 0		175S	A266a
166	1N4408A	10	15	1 0	17m	6.0	7 0	175A	A1cm
167	1N4408B	5	15	1 0	17m	6 0	7 0	175A	A1cm
168	1N4665	5	15	1 0	17m	500	8 2	200A	DO15
169	1N4744	10	15	1.0	17m	14		200A	A1ay
170	1N4744A	5	15	1 0	17m	14		200A	A1ay
171	1N5567	20	15	1 0 §	17m			200A	A196d
172	1N5567A	10	15	1 0 §	17m	14		200A	A196d
173	1N5567B	5	15	1 0 §	17m	14		200A	A196d
174	1N5637		15	1 0	1.0m		8 4	175A	DO13
175	1N5637A		15	1 0	1.0m		8 4	175A	DO13
176	1R15,A,B	xxx	15	1.0	17m	14	7 0	175A	A52c
177#	1S230	10	15	1.0	25m	13		150J	A56a
178#	1S3015	xx	15	1 0	20m	10	8 0	150	A3
179	1Z15,A,B	xxx	15	1 0	17m	14		150	A1ay
180	1Z15T20,10,5	xxx	15	1 0	13m	20	8 0	165A	A89c
181#	1ZC15T10,5	xx	15	1 0	13m	25	8.0	165A	A31p
182#	28Z6F,AF	12,6	15	1.0	10m	50	8 0	150J	DO13
183	AV2015	∅2	15	1 0	50m	9 0		150A	A19
184▼#	BZ150	5	15	1 0	20m	14	7 4	175J	A60t
185#	BZX29C15	5	15	1 0	20m	14	7 0	175J	A1cd

SYMBOLS AND CODES EXPLAINED IN INTERPRETER

2. SILICON REFERENCE DIODES

IN ORDER OF (1) REF. VOLTAGE, (2) DISSIPATION, and (3) TYPE No.

LINE No.	TYPE No.	TOLERANCE 3 (20 10 5 2) ± (%)	NOM. REF. VOLT. (V)	MAX. DISS @ 25°C (W)	TEST CUR. Izt (A)	MAX. DYN. IMP. (Ω)	TEMP. COEFF Tc	MAX. TEMP (°C)	DWG. No.
1#	BZX61C15	5	15	1 0	20m	14	6.0	175J	A3y
2♦	BZX85C15	5	15	1.0	15m	15	8.0	150A	DO15
3	CD31-00017	5	15	1 0	17m	14	7.6	200A	A1ce
4	CD31-12024	5	15	1.0	17m	14		200A	A1ce
5	CD32-12054	5	15	1.0	17m	14			
6	CZ15,A,B,D	xxxx	15	1 0	40m	16	7 0	175	DO15
7	CZ15C	∅	15	1 0	40m	16	7 0	175	DO15
8	EVR15,A,B	xxx	15	1.0	17m	22		175A	DO27
9#	EZ15A	10	15	1.0	27m	700	6 3		A1em
10	G15T20,10,5	xxx	15	1 0	17m	14		175	DO15
11#	GZ15	10	15	1.0	25m	35 △		150A	S115
12▼	HEP607-RT	5	15	1.0	17	14			DO41
13	HW15,A,B	xxx	15	1.0	17m	14		175	A196
14	JZ15,A,B,D	xxxx	15	1 0	17m	14	7 0	175	DO15
15	JZ15C	∅	15	1.0	17m	14	7 0	175	DO15
16	LPM15,A,-20	xx*	15	1 0	17m	14		150A	A1kk
17	LPZT15∅	10	15	1.0	25m	8 0	5 0	185	A86
18	PS10024B	5	15	1.0	17m	14		175A	A60p
19	PS10068	5	15	1 0	17m	10	8 6	150	A60p
20	SZ15 0	xxxx	15	1.0	20m	10 ∅	7.5	150A	A3g
21	TZ15,A,B,D	xxxx	15	1.0	40m	16	7 0	175	DO27
22	TZ15C	∅	15	1 0	40m	16	7 0	175	DO27
23	UZ8715	5	15	1 0	17m	14	7 0	175	A146h
24	UZ8815	10	15	1 0	17m	14	7 0	175	A146h
25	VR15,A,B	xxx	15	1 0	17m	14		125A	A1b
26	Z2A150F	20§∅	15	1 0	20m	50	8 0	100J	A141
27#	Z4A15	1	15	1 0	50m	10	9 0 △	150J	A1ef
28#	Z4B15	5	15	1 0	50m	10	9 0 △	150J	A1ef
29#	Z4C15	10	15	1 0	50m	10	9.0 △	150J	A1ef
30#	Z4D15	15	15	1 0	50m	10	9 0 △	150J	A1ef
31	Z15,A,B,D	xxxx	15	1 0	17m	14	7 0	175	DO27
32	Z15C	∅	15	1 0	17m	14	7 0	175	DO27
33	ZA15,A,B	xxx	15	1 0	17m	14		150C	A1ew
34	ZB15#	†	15	1.0 §	17m	14		150A	A1bc
35	ZD15∅,A,B	xxx	15	1 0	17m	12	7.0	175A	A1cm
36#	ZEC15	20	15	1 0	13m	25	.08	165A	DO3
37#	ZF15A	10	15	1 0	27m	11	6.3	150A	DO13
38	ZH15,A,B	xxx	15	1 0	17m	14	7 0	175A	DO1
39	ZM15,A,B,D	xxxx	15	1 0	17m	14	7 0	175	DO41
40	ZM15C	∅	15	1 0	17m	14	7 0	175	DO41
41#	7724	5	15	1 1	20m	15	7 0	125A	A1bu
42#	BZY92C15	5	15	1 1	50m	11	7.0	150J	DO13
43	1N4836,A,B	xxx	15	1 2	17m	17	8.2	175	DO29
44#	BZX67C15	5	15	1 3	50m	10	7 0	150J	S287
45#	ZD15#	5	15	1 3	50	10	7 0	150J	DO13
46	ZM15∅	10	15	1 3	50	10	7 0	150J	DO13
47#	ZU15	10	15	1 3	50	10	7.0	150J	A1bg
48#	ZY15	5	15	1 3	50	10	7 0	150J	A1bg
49▼	1N3793	20	15	1 5	25m	10	8.2	175S	C14∅
50▼	1N3793A	10	15	1 5	25m	10	8 2	175S	C14∅
51▼	1N3793B	5	15	1 5	25m	10	8 2	175S	C14∅
52	1N4469	5	15	1.5	17m	9 0		175A	A196
53	JAN1N4469	10	15	1.5	17m	9 0	8 2	175A	A1v
54#	1S4015,A	xx	15	1 5	20m	5 4	8 0	150A	DO1
55	1 5DKZ16,A,B	xxx	15	1 5	25m	10		175A	DO27
56	1 5JZ15,A,B,D	xxxx	15	1 5	25m	10	8.2	175	DO15
57	1 5JZ15C	∅	15	1.5	25m	10	8 2	175	DO15
58	1.5R15,A,B	xxx	15	1 5	26m	10	7 0	175A	A52c
59	1 5Z15,A,B,D	xxxx	15	1 5	25m	10	8 2	175	DO27
60	1 5Z15C	∅	15	1 5	25m	10	8 2	175	DO27
61#	BZY95C15	5	15	1.5	50m	8 0	10	175J	DO1
62	MC6318,A	xx	15	1 5	75m	28			A1q
63	MZ1000-17	10	15	1 5 §	17m	21 ∅	8 2	175J	A1ay
64#	SZ15C	5	15	1 5	20m	40	8 0	160A	A26
65#	Z2A15	1	15	1 5	50m	9 0	9 0 △	150J	A244
66#	Z2B15	5	15	1 5	50m	9 0	9 0 △	150J	A244
67#	Z2C15	10	15	1 5	50m	9.0	9.0 △	150J	A244
68#	Z2D15	∅∅§§	15	1 5		11		150J	A6b
69#	Z3A15	1	15	1 5	100m	8 0	9 0 △	150J	S4f
70#	Z3B15	5	15	1 5	100m	8 0	9.0 △	150J	S4f
71#	Z3B150CF	20§∅	15	1 5	20m	11	8 0	175J	DO1
72#	Z3C15	10	15	1 5	100m	8 0	9 0 △	150J	S4f
73#	Z3D15	∅∅§§	15	1 5	50m	10		150J	S4f
74#	68Z6,A	12,6	15	1 8	100m	40	1.5	150J	DO4
75#	ZC2015	5	15	1.8	1 0m	55	6.5	150	DO3
76#	ZD2015	10	15	1.8	1 0m	55	6 5	150	DO3
77	2R15,A,B	xxx	15	2 0	33m	10	7 0	175A	DO27
78	2VR15,A,B	xxx	15	2 0	33m	10			A3e
79	LMZ15,A,-20	xx*	15	2 0	33m	7 0		150A	A1kk
80	ZBC15	†	15	2.0 §	34m	6 0		150A	A1bc
81#	VR15F	5	15	2 2	20m	16		200S	DO3
82	1N5025	10	15	2 5	42m	6 0	7 0	150	A1gn
83	1N5025A	5	15	2.5	42m	6 0	7 0	150	A1gn
84	1N5071	5	15	3 0	50m	6 0		175A	A146j
85	3R15,A,B	xxx	15	3 0	50m	6 0	7.0	175A	A1rw
86	3TZ15,A,B,D	xxxx	15	3.0	75m	5.0	8 0	175	A1ec
87	3TZ15C	∅	15	3.0	75m	5 0	8.0	175	A1ec
88	3VR15,A,B	xxx	15	3.0	50m	6 0			A222
89	3Z15,A,B	xxx	15	3 0	50m	6 0		150	A222
90	CZ5071	10	15	3 0	50m	6 0	100	175A	A196e
91#	FDZ15A	10	15	3 0 ∅	80m	3 8	6 3	150A	S303
92	M3Z15,A	xx	15	3 0	51m	6 8		150A	A1kk
93	MZ715	5	15	3 0	50m	6 0	7 0	175A	A146j
94	MZ815	10	15	3 0	50m	6 0	7.0	175A	A146j
95	MZ915	20	15	3.0	50m	6 0	7 0	175A	A146j
96#	NT3C15	5	15	3 0	5 0m	50		125J	S43a
97	UZ715	5	15	3 0	50m	6 0	7.0	175A	A60
98	UZ815	10	15	3.0	50m	6 0	7.0	175A	A146f
99	UZ915	20	15	3 0	50m	6 0	7.0	175A	A60
100	ZAC15,A,B	xxx	15	3 0	17m	14		150C	A1ey
101	ZCC15	†	15	3 0 §	50m	6 0		150A	A1ey
102	1N1595,A	xx	15	3 5	40m	5 5	8 0	200S	DO4
103	3Z15T20,10,5	xxx	15	3.5	40m	8.3	8 0	165	DO4
104#	4GZ15A	10	15	4 0	170m	250	7 0		S19q
105	1N4022,A,B	xxx	15	5 0	85m	3.0	8.2	180A	S82
106	1N4962	5	15	5.0	75m	3.5		175A	A146m
107	JAN1N4962	5	15	5.0	75m	3.5	8.0	175A	A248f
108♦	1N5352	20	15	5.0	75m			200A	A1ee
109▼	1N5352A	10	15	5 0	75m	2.5		200A	A1ee
110▼	1N5352B	5	15	5.0	75m	2.5		200A	A1ee
111▼	5ZS15,A,B	xxx	15	5.0 §	75m	2.5		200A	A1ts
112#	5324	10∅	15	5.0	40m	7.5		150J	A9h
113▼	CTZC15,A,B,D∅	xxxx	15	5 0 §	75m	2 5 ∅	7 0	175A	A1ey
114▼	CTZC15C∅	1	15	5.0 §	75m	2 5 ∅	7 0	175A	A1ey
115▼	CTZC15E∅	3	15	5 0 §	75m	2.5 ∅	7.0	175A	A1ey
116	DSZ5715	5	15	5 0	75m	3.5	8 0	175A	A60r
117	DSZ5815	10	15	5.0	75m	3.5	8.0	175A	A60r
118	MZ5715	5	15	5.0	75m	3.5	7 0	175A	A60f
119	MZ5815	10	15	5 0	75m	3.5	7.0	175A	A60f
120	MZ5915	20	15	5.0	75m	3.5	7 0	175A	A60f
121▼	TZC15,A,B,D	xxxx	15	5 0 §	75m	2 5 ∅	7 0	175A	A1ey
122▼	TZC15C	1	15	5 0 §	75m	2.5 ∅	7 0	175A	A1ey
123▼	TZC15E	3	15	5 0 §	75m	2.5 ∅	7.0	175A	A1ey
124▼	UZ5715	5	15	5.0	75m	3.5	8 0	175A	A146m
125♦	UZ5815	10	15	5.0	75m	3.5	8.0	175A	A146m
126	UZ5915	20	15	5.0	75m	3 5 ∅	7.0	175A	A146m
127	ZC15	†	15	5.0 §	75m	2.5		150A	A1ey
128#	VR15E	5	15	5 8	20m	16		200S	DO4
129#	KR50	10	15	8.0	50m	5.0	9 4	150A	S186
130	UZ4715	5	15	8 0	75m	3.5		175A	A146m
131	UZ4815	10	15	8 0	75m	3 5		175A	A146m
132	1N1355,A	xx	15	10	500m	2.0		175A	DO4
133	1N1355B	20	15	10	500m	2 0			S11e
134	1N1355C,CA∅	xx	15	10 §	50	2 0		175J	S19a
135	1N1418	5	15	10	100m	4.0 ∅	7 0	175C	S154
136	1N1606,A	xx	15	10	140m	1.9	8 0	200S	DO4
137	1N1817	10	15	10	500m	2.0	7.0	150A	S19a
138	1N1817A	5	15	10	500m	2.0	7.0	150A	S19a
139	1N1817C,CA∅	xx	15	10	500m	2 0	7.0	150A	S19a
140	1N1894	10	15	10	25m	8.0	6 0	200A	S82
141	1N1894A	5	15	10	25m	8 0	6 0	200A	S82
142	1N2047-1	5	15	10	500m	3.0	8.0	150J	DO4
143	1N2979,A,B	xxx	15	10	170m	3.0		175C	DO4∅
144	JAN1N2979B,RB	5	15	10	170m	3.0	8.2	150C	DO4
145	1N4266	20	15	10	170m	3.0	7 0	175C	S134
146	1N4266A	10	15	10	170m	3.0	7 0	175C	S134
147	1N4266B	5	15	10	170m	3.0	7 0	175C	S134
148	JAN1N4266B	5	15	10 §	170m	3.0	8 2	175S	S134a
149#	1S272	10	15	10	250m	3.0		150J	S19g
150#	1S5015,A	xx	15	10	50m	5.0	8.0	150C	DO4
151#	1S5015C∅	10	15	10	50m	5.0	8.0	150C	DO4
152#	1S6015	10	15	10	100m	5.0	6 0	150	DO4
153#	1S6015A	5	15	10	100m	5.0	6.0	150	DO4
154	10PZ15,A,B,D	xxxx	15	10	170m	3 0	7.0	175	DO4
155	10PZ15C	∅	15	10	170m	3.0	7 0	175	DO4
156	10RZ15,A,B,D	xxxx	15	10	500m	2 0	7.0	155	DO4
157	10RZ15C	∅	15	10	500m	2.0	7 0	155	DO4
158	10Z15T20,10,5	xxx	15	10	140m	4 5	8.0	165	DO4
159	AV8015	∅2	15	10	500m	3 0		150A	S11
160#	CC4015	5	15	10	15m	15	5 5	150	S19
161#	CD4015	10	15	10	15m	15	5.5	150	S19
162#	GZ15A	10	15	10 ∅	130m	2.4	6.3	150A	DO4
163#	OAZ232	5	15	10	20m	39		150J	DO4
164#	PZ15A	10	15	10 ∅	130m	2 4	6.3	150A	S95a
165	PZT15∅	10	15	10 ∅	25m	8 0	6.0	185	S82
166	UZ7715	5	15	10	150m	2.0	7 0	175	S277∅
167	UZ7815	10	15	10	150m	2 0	7 0	175	S277∅
168	UZ7915	20	15	10	150m	2.0	7.0	175	S277∅
169#	Z5D150CF	20§∅	15	10	50m	5 0	7 0	150J	DO4
170#	ZC5015	5	15	10	100m	5.0	6.2	150A	S19
171#	ZD5015	10	15	10	100m	5.0	6 2	150A	S19
172#	BZZ24	5	15	13	20m	8.9	12	150	DO4
173#	4124	10∅	15	15	200m	35		150J	S87
174#	4224	10∅	15	15	200m	35		150J	S87
175#	BZY93C15	5	15	20 §	1	1.2	10	175J	DO4∅
176#	88Z6,A	12,6	15	25	400m	5.5	9 0	150J	S179
177#	SZ15B	5	15	25	100m	3.0	7.0	150B	S16
178#	ZL15	10	15	25 ∅	50	10	7 0	150J	M41
179#	ZX15	5	15	25 ∅	50	10	7 0	150J	M41
180#	4324	10∅	15	30	200m	35		150J	S87
181#	4424△	10∅	15	30	200m	35		150J	S87
182	75TE15,A	xx	15	45	670m	8 0m	1 0	125C	TO36
183	1N2813,A,B	xxx	15	50	830m	1.4	7.0	175S	C5a
184	JAN1N2813B,RB	5	15	50	830m	1 4	8 2	150C	C5a
185	1N3314	20	15	50	830m	1.4	7 0	175J	DO5
186	1N3314A	10	15	50	830m	1.4	7 0	175J	DO5
187	1N3314B	5	15	50	830m	1 4	7.0	175J	DO5
188	JAN1N3314B,RB	5	15	50	830m	1 4	8.2	150	DO5
189	50T15,A,B	xx*	15	50	830m	1.4	7 0		S19e
190	AV51015	5	15	50	830m	1.4	7.0	150C	C5a
191#	BZY91C15	5	15	75 §	2	.60	9 0	175J	DO5∅
192	80TF15,A	xx	15	80	670m	8.0m	1 0	125C	M117c
193#	4524	10∅	15	100	340m	.80		150J	S87
194#	4624	10∅	15	100	340m	80		150J	S87
195#	ZC715	5	15	100 §	100	2.0	6 7	175J	S125d∅
196	250ZE15	10	15	250 §	10		8 0	190A	S83
197	250ZF15	10	15	250 §	10m		8.0	190A	M56a
198	LID15,A	xx	15	400	8.2m	16		150A	M401
199	1N228∅	10	15.7	150m	200u			150A	C1
200	1N228A∅	5	15 7	150m	200u			150A	C1
201	1N1316,A	xx	15 7	15	.20m		8.0	150A	C1

SYMBOLS AND CODES EXPLAINED IN INTERPRETER

2. SILICON REFERENCE DIODES

IN ORDER OF (1) REF. VOLTAGE, (2) DISSIPATION, and (3) TYPE No.

LINE No	TYPE No.	TOLERANCE 3 (20 10 5 2) ± (%)	NOM REF. VOLT (V)	2 MAX. DISS. @ 25°C (W)	TEST CUR Izt (A)	MAX DYN. IMP (Ω)	TEMP. COEFF Tc	MAX. TEMP (°C)	DWG. No.
1	IDAZ228,A,B,C∅	xxxx	15.7	150m	200u			150A	A1hc
2#	RD16A	10	15.8	20	5 0m	55	8 0	150S	A1dw
3▼	1N767	10	15.8	250m	5 0m	70	8.0	150	DO7
4▼	1N767A	5	15.8	250m	5 0m	70	8 0	150	DO7
5#	1S761	xxx	15.8	25	5.0m	50	8 0	150	C1d
6	CD3128	5	15 8	25	5 0m	120 ∅	8 9	150A	A1sj
7	1N2038	5	15 8	.75	5 0m	120	8.0	150J	DO12
8#	RD16B	10	15.8	1 0	20m	12	8 0	150S	A164
9#	RD16C	10	15 8	3 0	60m	8 0	8 0	150S	S42
10	1N2047	5	15 8	10	500m	3 0	8.0	150J	DO4
11#	RD16D	10	15.8	10	200m	3 0	7 0	150S	S103
12	1N2047B	5	16		500m	3 0		150A	S19a
13	DSZ3016	10	16		50m	7 0	7.0		A266
14	HRE16	5	16		10m	25	50	70A	A126a
15	HRE16A	5	16		10m	25	50	125A	A126a
16#	SZ200-16	15	16	20	5 0m	100	8 0	100A	A138
17	1/4A16,A,B	xxx	16	25	3.9m	24	7 0	175	DO7
18	1/4M16Z,10,5	xxx	16	250m	3 9m	24	7 2	175J	A1cy
19	25N16	20	16	25	3.9m	24		250	DO7
20	1N719,A	xx	16	25	12m	15	7 4	175A	DO7
21	1N719B	20	16	25	12m	15			DO7
22	1N767-2	5	16	25	5 0m	70	8 0	150	DO7
23	1N4110	5	16	25	25m	100		200J	DO7
24	1N4703	5	16	25	05m			200A	DO14
25#	02Z16A	5	16	250m	3 5m	90	8 7	175J	DO35
26#	BZY85C16V5	5	16	25 §	5 0m	40	9 5 △	150J	A171f
27#	HS2165	5	16	25	5 0m			175A	DO7
28#	KS2160A	5	16	250m	5 0m	120	8 0 △	150A	DO7
29#	MR160C-H	5	16	25	5 0m	70		250	DO7
30#	MZ1016	7	16	250m	50m	40	8 3	175J	DO7
31	PD6019,A	xx	16	.25	1 0m	55		150	A109
32	PD6060	5	16	25	5.0m	16		150	A2c
33	SV139	5	16	25	5 0m	120	7 6	150	DO7
34#	SZ16	4	16	.25	5 0m	95	81	150J	C1f
35	MC6019,A	xx	16	30	5.0m	35		175	A2m
36#	Z1A16	1	16	320m	5 0m	50	9 0 △	150A	C29
37#	Z1B16	5	16	320m	5 0m	50	9.0 △	150A	C29
38#	Z1C16	10	16	320m	5 0m	50	9 0 △	150A	C29
39#	Z1D16	15	16	320m	5 0m	50	9 0 △	150A	C29
40	1N966,A,B	xxx	16	40	7.8m	17	7 0	175S	DO7
41	JAN1N966B	5	16	40	7 8m	17	8 3	175A	DO7
42	1N3523	5	16	40	5 0m	16	8 5	200A	DO7
43	JAN1N4110	5	16	400m	250u	100	8 5	175A	A1sx
44	1N5536	20	16	400m§	1.0m			175A	DO7
45	1N5536A	10	16	400m§	1 0m			175A	DO7
46	1N5536B	5	16	400m§	1.0m	100		175A	DO7
47▼	JAN1N5536B	5	16	400m	1 0m	100	8 3	200A	DO14
48	1N5536C	2	16	400m§	1 0m	100		175A	DO7
49	1N5536D	1	16	400m§	1 0m	100		175A	DO7
50▼	1N5741B	5	16	400m	5 0m	40	8 1	200J	DO35
51#	1S2160A	5	16	40	5 0m	120	7 0	150A	A1
52#	1S7160A	5	16	400m	5 0m	100	7 0	175A	A1
53#	5525	5	16	40	5 0m	40	7 0	125A	A1ce
54#	BZX46C16	5	16	400m	7 8	17	7 0	175J	DO35
55#	BZX55C16	5	16	400m	5 0m	40	7.0	150J	DO35
56▼#	BZX71B16	2	16	400m§	5 0m	40		175J	DO35
57#	BZX71C16	5	16	400m§	5 0m	40		200S	A9m
58#	BZX79C16	5	16	400m	5 0m	40	130	200J	A257
59#	BZX83C16	5	16	400m	5 0m	40	7 0	150J	DO35
60▼#	BZY85B16	2	16	400m	5 0m	40	7 1	150J	DO7
61#	BZY88C16	5	16	40	5 0m	45		175J	DO7
62#	BZY94C16	5	16	40				150J	DO7
63	C4021	10	16	40	7 8m	17		175	A134a
64	C6021	10	16	400m	1 0m	40 ∅	7 3	175A	M371c
65	C6021A	5	16	400m	1 0m	40 ∅	7 3	175A	M371c
66	C6121	10	16	400m	1 0m	40	7 3	175A	M131a
67	C6121A	5	16	400m	1 0m	40	7 3	175A	M131a
68	CZA16D,10,5	xxx	16	40 ∅	250u	200	7 0	175J	M371
69	CZB16D,10,5	xxx	16	40 ∅	3.9m	24	7 0	175J	M371
70	CZC16D,10,5	xxx	16	400m∅	7 8m	17	7 0	175J	M371
71	CZD016,-5	xx	16	40	6.0m	12		175	DO7
72	CZD16D,10,5	xxx	16	40 ∅	250u	200	7.0	175J	M451
73	CZE16D,10,5	xxx	16	40 ∅	7.8m	17	7.0	175J	M451
74	HM16,A,B	xxx	16	400m§	7.8m	17		175A	A196c
75#	KS160A	5	16	400m	5 0m	120	11 △	150A	DO7
76#	LR160CH	5	16	40	5.0m	75	6 9	150S	DO7
77	M4Z16,A,-20	xx*	16	40	7.8m	17		150A	A1kk
78#	M16Z	5 0	16	400m	5 0m	40	7 5	150A	DO7
79	MACZA16D,10,5	xxx	16	40 ∅	250u	200	7 0	175J	M453
80	MACZB16D,10,5	xxx	16	40 ∅	3.9m	24	7 0	175J	M453
81	MACZC16D,10,5	xxx	16	40 ∅	7 8m	17	7 0	175J	M453
82	MACZD16D,10,5	xxx	16	40 ∅	250u	200	7 0	175J	M453
83	MACZE16D,10,5	xxx	16	40 ∅	7 8m	17	7 0	175J	M453
84	MBCZA16D,10,5	xxx	16	40 ∅	250u	200	7 0	175J	M454
85	MBCZB16D,10,5	xxx	16	40 ∅	3.9m	24	7 0	175J	M454
86	MBCZC16D,10,5	xxx	16	400m∅	7 8m	17	7 0	175J	M454
87	MBCZD16D,10,5	xxx	16	40 ∅	250u	200	7.0	175J	M454
88	MBCZE16D,10,5	xxx	16	40 ∅	7.8m	17	7 0	175J	M454
89	MCCZA16D,10,5	xxx	16	.40 ∅	250u	200	7.0	175J	M455
90	MCCZB16D,10,5	xxx	16	.40 ∅	3 9m	24	7.0	175J	M455
91	MCCZC16D,10,5	xxx	16	.40 ∅	7 8m	17	7 0	175J	M455
92	MCCZD16D,10,5	xxx	16	40 ∅	250u	200	7 0	175J	M455
93	MCCZE16D,10,5	xxx	16	40 ∅	7 8m	17	7 0	175J	M455
94	MDCZA16D,10,5	xxx	16	40 ∅	250u	200	7 0	150A	M410
95	MDCZB16D,10,5	xxx	16	40 ∅	3 9m	24	7 0	150A	M410
96	MDCZC16D,10,5	xxx	16	40 ∅	7.8m	17	7.0	150A	M410
97	MDCZD16D,10,5	xxx	16	40 ∅	250u	200	7.0	150A	M410
98	MDCZE16D,10,5	xxx	16	40 ∅	7 8m	17	7 0	150A	M410
99	MZ500-21	10	16	4 §	7 8m	20 ∅	8 3	175J	DO7
100	MZC16A10	†	16	400m§	3.1m	42	8 3	175J	M468
101	MZC16B10	§†	16	400m§	250u	100		175J	M468
102	WZ539	5	16	.40	5.0m	20		150A	A31e
103#	Z5A16	1	16	400m§	5 0m	50	9 0 △	200J	A1hs
104#	Z5B16	5	16	400m§	5 0m	50	9.0 △	200J	A1hs
105#	Z5C16	10	16	400m§	5.0m	50	9 0 △	200J	A1hs
106#	Z5D16	15	16	400m§	5 0m	50	9.0 △	200J	A1hs
107#	ZF16	5	16	400m	5 0m	40	9 0	150J	DO7
108#	ZP16#	5	16	400m	5 0m	40	9 0	150J	DO7
109	1/2Z16T5	5	16	.50	7.8m	13		175	A94f
110	1N5246	20†	16	50	7 8m			200A	DO7
111	1N5246A,B	§∅	16	50	7 8m	17	8 3	200A	DO7
112	MTZ619,A	xx	16	.50	5 0m	35		175A	A60e
113	MZ92-16	†	16	500m§	7 8m		7.7	150J	C103
114	PS8918	5	16	50	10m	12	8 7	150	A60p
115	S5246,A,B	xxx	16	500m	7 8m	17	8.3	175	DO41
116#	ZSF16	1	16	500m	7 0m	10	1 0	150S	M487a
117#	ZOA16	1	16	520m	5 0m	20	9.0 △	150J	A1ef
118#	ZOB16	5	16	520m	5 0m	20	9.0 △	150J	A1ef
119#	ZOC16	10	16	520m	5 0m	20	9 0 △	150J	A1ef
120#	ZOD16	15	16	520m	5 0m	20	9 0 △	150J	A1ef
121	1N4637	5	16	60	7 8m	700	8 3	200A	DO14
122#	NTO 6C16	5	16	600m	5 0m	40		125J	M498
123#	UZ16	10	16	60	37m	16	8 0	135A	DO3
124#	ZC016	5	16	60	1 0m	60	6 7	100	A3k
125#	ZD016	10	16	60	1.0m	60	6 7	100	A3k
126#	ZW16	5	16	600m	5 0m	40	9 0	150J	A1bg
127	7JZ16	†	16	750m	7.8m	17	7.0	175	DO15
128	7Z16,A,B,D	xxxx	16	750m	7 8m	17	7 0	175	DO27
129	7Z16C	∅	16	750m	7 8m	17	7.0	175	DO27
130	7ZM16,A,B,D	xxxx	16	750m	7.8m	17	7 0	175	DO41
131	7ZM16C	∅	16	750m	7 8m	17	7 0	175	DO41
132	1N2038-2	5	16	75	5 0m	120	8 0	150J	DO12
133	1N3684	20	16	750m	7 8m	17	7 0	175S	A1az
134	1N3684A	10	16	750m	7 8m	17	7 0	175S	A1az
135	1N3684B	5	16	750m	7 8m	17	7 0	175S	A1az
136	MC6119,A	xx	16	75	10m	35		175A	A2d
137	MMZ16,A,-20	xx*	16	75	7 8m	17		150A	A1kk
138	MZ16T20,10,5	xxx	16	.75	10m	20	8.0	165A	A152
139	SV1021	5	16	.75	5.0m	120 ∅	7.6	150	A82f
140	WZ921	5	16	75	5 0m	120 ∅		150A	A1fw
141	1A16M,A,B	xxx	16	1.0	16m	16		75A	DO15
142	1E16Z,10,5	xxx	16	1 0	16m	16	7 0	150A	A52g
143	1M16Z,10,5	xxx	16	1 0	16m	16	7 0	175S	DO1
144	1N1776,A	xx	16	1 0	50m	8 6		175S	DO13
145	1N3025	20	16	1 0	15m	16		175A	A31a
146	1N3025A	10	16	1.0	15m	16		175A	A31a
147	1N3025B	5	16	1 0	15m	16		175A	A31a
148	JAN1N3025B	5	16	1.0	16m	16	8 3	175A	A31c
149	1N4167	20	16	1 0	16m	16	7.0	175	DO29
150	1N4167A	10	16	1 0	16m	16	7 0	175	DO29
151	1N4167B	5	16	1 0	16m	16	7 0	175	DO29
152	1N4332,A,B	xxx	16	1.0	16m	16	7 0	300S	DO7
153▼	1N4409	20	16	1.0	15m	8 0		175S	A266a
154	1N4666	5	16	1 0	16m	550	8 3	200A	DO15
155	1N4745	10	16	1 0	16m	16		200A	A1ay
156	1N4745A	5	16	1 0	16m	16		200A	A1ay
157	1N5568	20	16	1 0 §	15m			200A	A196d
158	1N5568A	10	16	1 0 §	15m	16		200A	A196d
159	1N5568B	5	16	1 0 §	15m	16		200A	A196d
160	1N5638		16	1.0	1.0m		8 6	175A	DO13
161	1N5638A		16	1 0	1.0m		8 6	175A	DO13
162	1R16,A,B	xxx	16	1 0	16m	16	7 0	175A	A52c
163#	1S231	10	16	1 0	17m	20		150J	A56a
164#	1S3016	xx	16	1 0	20m	15	8 0	150	A3
165	1Z16,A,B	xxx	16	1 0	15m	16		150	A1ay
166	1Z16T20,10,5	xxx	16	1.0	13m	30	8 0	165A	A89c
167#	1ZC16T10,5	xx	16	1 0	13m	32	8 0	165A	A31p
168	AV2016	∅2	16	1 0	50m	9 0		150A	A19
169#	BZX29C16	5	16	1.0	10m	16	7 0	175J	A1cd
170#	BZX61C16	5	16	1 0	10m	16	6 0	175J	A3y
171♦	BZX85C16	5	16	1 0	15m	15	8 4	150A	DO15
172	CD31-00018	5	16	1.0	16m	16	7 8	200A	A1ce
173	CD31-12025	5	16	1.0	16m	16		200A	A1ce
174	CD32-12055	5	16	1 0	16m	16			
175	CZ16,A,B,D	xxxx	16	1.0	20m	24	7.0	175	DO15
176	CZ16C	∅	16	1 0	20m	24	7 0	175	DO15
177	EVR16,A,B	xxx	16	1 0	16m	24		175A	DO27
178	G16T20,10,5	xxx	16	1.0	15m	16		175	DO15
179	HW16,A,B	xxx	16	1 0	16m	16		175	A196
180	JZ16,A,B,D	xxxx	16	1 0	15m	16	7.0	175	DO15
181	JZ16C	∅	16	1.0	15m	16	7.0	175	DO15
182	LPM16,A,-20	xx*	16	1 0	15m	16		150A	A1kk
183	PS10025B	5	16	1.0	16m	16		175A	A60p
184	PS10069	5	16	1 0	16m	12	8.8	150	A60p
185	SZ16.0	xxxx	16	1 0	20m	10 ∅	7.5	150A	A3g

SYMBOLS AND CODES EXPLAINED IN INTERPRETER

2. SILICON REFERENCE DIODES

IN ORDER OF (1) REF. VOLTAGE, (2) DISSIPATION, and (3) TYPE No.

LINE No	3 TYPE No.	TOLERANCE 1 20 10 5 2 ± (%)	NOM REF. VOLT (V)	2 MAX DISS @ 25°C (W)	TEST CUR. Izt (A)	MAX. DYN IMP. (Ω)	TEMP. COEFF Tc	MAX TEMP (°C)	DWG. No.
1	TZ16,A,B,D	xxxx	16	1 0	20m	24	7 0	175	DO27
2	TZ16C	☑	16	1 0	20m	24	7 0	175	DO27
3	UZ8716	5	16	1 0	15m	16	7 0	175	A146h
4	UZ8816	10	16	1 0	15m	16	7.0	175	A146h
5	VR16,A,B	xxx	16	1 0	15m	16		125A	A1b
6#	Z4A16	1	16	1 0	50m	12	9 0 △	150J	A1ef
7#	Z4B16	5	16	1 0	50m	12	9 0 △	150J	A1ef
8#	Z4C16	10	16	1 0	50m	12	9 0 △	150J	A1ef
9#	Z4D16	15	16	1 0	50m	12	9.0 △	150J	A1ef
10	Z4XL16,B	xx	16	1 0	20m	40	8 2	165A	DO13
11	Z16,A,B,D	xxxx	16	1 0	15m	16	7 0	175	DO27
12	Z16C	☑	16	1 0	15m	16	7 0	175	DO27
13	ZA16,A,B	xxx	16	1 0	16m	16		150C	A1bc
14	ZB16#	†	16	1 0 §	15m	16		150A	A1bc
15	ZD16☑,A,B	xxx	16	1 0	16m	14	7.0	175A	A1cm
16	ZH16,A,B	xxx	16	1 0	16m	16	7 0	175A	DO1
17	ZM16,A,B,D	xxxx	16	1 0	15m	16	7.0	175	DO41
18	ZM16C	☑	16	1 0	15m	16	7 0	175	DO41
19#	7725	5	16	1 1	20m	15	7 0	125A	A1bu
20#	BZY92C16	5	16	1 1	25m	15	7.0	150J	DO13
21	1N4837,A,B	xxx	16	1 2	16m	19	8 3	175	DO29
22#	BZX67C16	5	16	1 3	25m	15	7.0	150J	S287
23#	ZD16#	5	16	1 3	25	15	7 0	150J	DO13
24#	ZY16	5	16	1 3	25	15	7.0	150J	A1bg
25▼	1N3794	20	16	1 5	23m	11	8.3	175S	C14☑
26▼	1N3794A	10	16	1 5	23m	11	8.3	175S	C14☑
27▼	1N3794B	5	16	1 5	23m	11	8.3	175S	C14☑
28	1N4470	5	16	1 5	16m	10		175A	A196
29	JAN1N4470	10	16	1 5	15m	10	8 3	175A	A1v
30#	1S4016,A	xx	16	1 5	20m	6 0	8 0	150A	DO1
31	1 5DKZ18,A,B	xxx	16	1 5	23m	11		175A	DO27
32	1 5JZ16,A,B,D	xxxx	16	1 5	23m	11	8 3	175	DO15
33	1 5JZ16C	☑	16	1 5	23m	11	8 3	175	DO15
34	1 5R16,A,B	xxx	16	1 5	23m	12	7 0	175A	A52c
35	1 5Z16,A,B,D	xxxx	16	1 5	23m	11	8 3	175	DO27
36	1.5Z16C	☑	16	1 5	23m	11	8 3	175	DO27
37#	BZY95C16	5	16	1 5	20m	9 0	11	175J	DO1
38	MC6319,A	xx	16	1 5	50m	31			A1q
39	MZ1000-18	10	16	1 5 §	16m	24 ∅	8 3	175J	A1ay
40#	SZ16C	5	16	1 5	20m	60	8 0	160A	A26
41#	Z2A16	1	16	1 5	50m	12	9 0 △	150J	A244
42#	Z2B16	5	16	1 5	50m	12	9.0 △	150J	A244
43#	Z2C16	10	16	1 5	50m	12	9 0 △	150J	A244
44#	Z2D16	15	16	1 5	50m	12	9.0 △	150J	A244
45#	Z3A16	1	16	1 5	100m	10	9 0 △	150J	S4f
46#	Z3B16	5	16	1 5	100m	10	9 0 △	150J	S4f
47#	Z3B160CF	20§∅	16	1 5	20m	12	8.0	175J	DO1
48#	Z3C16	10	16	1 5	100m	10	9 0 △	150J	S4f
49#	Z3D16	15	16	1 5	100m	10	9 0 △	150J	S4f
50#	ZC2016	5	16	1 8	1 0m	60	6 7	150	DO3
51#	ZD2016	10	16	1 8	1 0m	58	6 7	150	DO3
52	2R16,A,B	xxx	16	2 0	31m	12	7 0	175A	DO27
53	2VR16,A,B	xxx	16	2 0	31m	12			A3e
54	LMZ16,A,-20	xx*	16	2 0	31m	8 0		150A	A1kk
55#	VR16F	5	16	2 2	20m	19		200S	DO3
56	1N5026	10	16	2 5	39m	6 6	7 0	150	A1gn
57	1N5026A	5	16	2 5	39m	6 6	7 0	150	A1gn
58	1N5072	5	16	3 0	50m	7 0		175A	A146j
59	3R16,A,B	xxx	16	3 0	47m	8 0	7 0	175A	A1rw
60	3TZ16,A,B,D	xxxx	16	3 0	50m	10	8 0	175	A1ec
61	3TZ16C	☑	16	3 0	50m	10	8 0	175	A1ec
62	3VR16,A,B	xxx	16	3 0	46m	8 0			A222
63	CZ5072	10	16	3 0	50m	7 0	12D	175A	A196e
64	M3Z16,A	xx	16	3 0	47m	7 5		150A	A1kk
65	MZ716	5	16	3 0	50m	7 0	7 0	175A	A146j
66	MZ816	10	16	3 0	50m	7 0	7 0	175A	A146j
67	MZ916	20	16	3 0	50m	7 0	7 0	175A	A146j
68#	NT3C16	5	16	3 0	5.0m	60		125J	S43a
69	UZ716	5	16	3 0	50m	7 0	7 0	175	A60
70	UZ816	10	16	3 0	50m	7 0	7 0	175	A146f
71	UZ916	20	16	3 0	50m	7 0	7 0	175	A60
72	ZAC16,A,B	xxx	16	3 0	16m	16		150C	A1ey
73	3T16,A,B	xx*	16	3 5	50m	8 6			DO4
74	3Z16T20,10,5	xxx	16	3 5	40m	11	8 0	165	DO4
75	1N4023,A,B	xxx	16	5.0	80m	3 0	8 3	180A	S82
76	1N4963	5	16	5 0	75m	3 5		175A	A146m
77	JAN1N4963	5	16	5 0	75m	3 5	8.0	175A	A248f
78♦	1N5353	20	16	5 0	75m			200A	A1ee
79▼	1N5353A	10	16	5 0	75m	2 5		200A	A1ee
80▼	1N5353B	5	16	5 0	75m	2 5		200A	A1ee
81▼	5ZS16,A,B	xxx	16	5 0 §	75m	2 5		200A	A1ts
82	DSZ5716	5	16	5 0	75m	3 5	8 0	175A	A60r
83	DSZ5816	10	16	5 0	75m	3 5	8 0	175A	A60r
84	MZ5716	5	16	5 0	75m	3 5	7 0	175A	A60f
85	MZ5816	10	16	5 0	75m	3 5	7 0	175A	A60f
86	MZ5916	20	16	5 0	75m	3 5	7 0	175A	A60f
87▼	UZ5716	5	16	5 0	75m	3 5	8 0	175A	A146m
88♦	UZ5816	10	16	5 0	75m	3.5	8 0	175A	A146m
89	UZ5916	20	16	5 0	75m	3 5 ∅	7 0	175A	A146m
90#	VR16E	5	16	5 8	20m	19		200S	DO4
91	UZ4716	5	16	8 0	75m	3 5		175A	A146m
92	UZ4816	10	16	8 0	75m	3 5		175A	A146m
93	1N1356,A	xx	16	10	500m	3 0		175A	DO4
94	1N1356B	20	16	10	500m	3 0			S11e
95	1N1356C,CA∅	xx	16	10 §	50	3 0		175J	S19a
96	1N1818	10	16	10	500m	3.0	7 0	150A	S19a
97	1N1818A	5	16	10	500m	3 0	7 0	150A	S19a
98	1N1818C,CA∅	xx	16	10	500m	3 0	7 0	150A	S19a
99	1N2047-2	5	16	10	500m	3 0	8 0	150J	DO4
100	1N2980,A,B	xxx	16	10	155m	4 0		175C	DO4☑
101	JAN1N2980B,RB	5	16	10	155m	4 0	8 3	150C	DO4
102	1N4267	20	16	10	155m	4 0	7.0	175C	S134
103	1N4267A	10	16	10	155m	4 0	7 0	175C	S134
104	1N4267B	5	16	10	155m	4.0	7.0	175C	S134
105	JAN1N4267B	5	16	10 §	155m	4 0	8 3	175S	S134a
106#	1S273	10	16	10	170m	4 0		150J	S19g
107#	1S5016,A	xx	16	10	50m	5 0	8 0	150C	DO4
108#	1S5016C∅	10	16	10	50m	5 0	8 0	150C	DO4
109#	1S6016	10	16	10	100m	5.0	6 0	150	DO4
110#	1S6016A	5	16	10	100m	5.0	6 0	150	DO4
111	10PZ16,A,B,D	xxxx	16	10	155m	4.0	7 0	175	DO4
112	10PZ16C	☑	16	10	155m	4.0	7 0	175	DO4
113	10RZ16,A,B,D	xxxx	16	10	500m	3 0	7 0	155	DO4
114	10RZ16C	☑	16	10	500m	3 0	7 0	155	DO4
115	10Z16T20,10,5	xxx	16	10	140m	5 2	8 0	165	DO4
116	AV8016	∅2	16	10	500m	3 0		150A	S11
117#	CC4016	5	16	10	15m	15	5.8	150	S19
118#	CD4016	10	16	10	15m	15	5 8	150	S19
119#	OAZ233	5	16	10	20m	48		150J	DO4
120	UZ7716	5	16	10	150m	2 5	7 0	175	S277☑
121	UZ7816	10	16	10	150m	2.5	7 0	175	S277☑
122	UZ7916	20	16	10	150m	2.5	7 0	175	S277☑
123#	Z5D160CF	20§∅	16	10	50m	5 0	7 5	150J	DO4
124#	ZC5016	5	16	10	100m	5 0	6 4	150A	S19
125#	ZD5016	10	16	10	100m	5 0	6 4	150A	S19
126#	BZZ25	5	16	13	20m	10	14	150	DO4
127#	BZY93C16	5	16	20 §	500m	1.2	11	175J	DO4☑
128#	ZX16	5	16	25 ☑	25	15	7 0	150J	M41
129	1N2814,A,B	xxx	16	50	780m	1.6	7 0	175S	C5a
130	JAN1N2814B,RB	5	16	50	780m	1.6	8 3	150C	C5a
131	1N3315	20	16	50	780m	1.6	7 0	175J	DO5
132	1N3315A	10	16	50	780m	1.6	7 0	175J	DO5
133	1N3315B	5	16	50	780m	1.6	7 0	175J	DO5
134	JAN1N3315B,RB	5	16	50	780m	1 6	8 3	150	DO5
135	50T16,A,B	xx*	16	50	78	1.6	7.0		S19e
136	AV51016	5	16	50	780m	1 6	7 0	150C	C5a
137#	BZY91C16	5	16	75 §	2	60	9 0	175J	DO5☑
138#	ZC716	5	16	100 §	100	2 0	7 0	175J	S125d☑
139	25OZE16	10	16	250 §	10		8 0	190A	S83
140	25OZF16	10	16	250 §	10		8 0	190A	M56a
141	LID16,A	xx	16	400	7 5m	18		150A	M401
142#	BZY85C16	5	16 1	250m§	16m	40	7.1	150J	DO7
143▼#	BZ162	5	16 2	1 0	20m	16	7.5	175J	A60t
144#	BZX70C16	5	16 2	2 5	20m	9 0	110	150J	A171b
145#	1116	10∅	16 5	25	5.0m	90	7 5	150J	C18f
146#	BZY83C16V5	5	16.5	25	5 0m	75	9 5 △	150J	C1g
147#	HS7165	5	16 5	.40	5 0m			175A	DO7
148#	5325	10∅	16 5	5 0	40m	9 0		150J	A9h
149#	4125	10∅	16 5	15	200m	1 3		150J	S87
150#	4225	10∅	16 5	15	200m	1 3		150J	S87
151#	4325	10∅	16 5	30	200m	1.3		150J	S87
152#	4425△	10∅	16 5	30	200m	1.3		150J	S87
153#	4525	10∅	16 5	100	280m	1.0		150J	S84
154#	4625	10∅	16.5	100	280m	1.0		150J	S94
155	SV3206	10	16 8		10m	30	20	125A	A1ha
156	SV3207	10	16 8		10m	30	10	125A	A1ha
157#	ZS17	5	16.8		5 0m	180	500m	150A	C3d
158	PS1502	5	16 8	25	10m	30	20	150A	A1gc
159	PS1502A	5	16 8	25	10m	30	10	150A	A1gc
160	TC16 8A5A	5△☑	16 8	1 0	10m	30	05	175A	A1ss
161	1N4059	5	16 8	1.5	10m	30	50	100	A1ss
162	1N4059A	5	16 8	1.5	10m	30	20	100	A1ss
163	1N2047C	5	17		500m	3.0		150A	S19a
164	1/4A17,A,B	xxx	17	25	3 7m	26	7 5	175	DO7
165	1/4M17Z,10,5	xxx	17	25	3 7m	26	7 4	175J	A1cy
166	25N17	20	17	.25	3 7m	26		250	DO7
167	1N767-3	5	17	25	5 0m	70	8 0	150	DO7
168	1N4111	5	17	25	.25m	100		200J	DO7
169	1N4704	5	17	25	.05m			200A	DO14
170	SV141	5	17	.25	5 0m	120	7.7	150	DO7
171#	SZ17	4	17	25	5 0m	105	81	150J	C1f
172	JAN1N4111	5	17	400m	250u	100	9 0	175A	A1sx
173	1N5537	20	17	400m§	1.0m			175A	DO7
174	1N5537A	10	17	400m§	1 0m			175A	DO7
175	1N5537B	5	17	400m§	1.0m	100		175A	DO7
176▼	JAN1N5537B	5	17	400m	1 0m	100	8.5	200A	DO14
177	1N5537C	2	17	400m§	1 0m	100		175A	DO7
178	1N5537D	1	17	400m§	1 0m	100		175A	DO7
179	CZA17D,10,5	xxx	17	40 ☑	250u	200	7 5	175J	M371
180	CZB17D,10,5	xxx	17	40 ☑	3 7m	26	7 5	175J	M371
181	CZC17D,10,5	xxx	17	40 ☑	7 2m	19	7 5	175J	M371
182	CZD17D,10,5	xxx	17	40 ☑	250u	200	7 5	175J	M451
183	CZE17D,10,5	xxx	17	40 ☑	7 2m	19	7 5	175J	M451
184	MACZA17D,10,5	xxx	17	40 ☑	250u	200	7 5	175J	M453
185	MACZB17D,10,5	xxx	17	40 ☑	3 7m	26	7 5	175J	M453
186	MACZC17D,10,5	xxx	17	40 ☑	7 2m	19	7 5	175J	M453
187	MACZD17D,10,5	xxx	17	40 ☑	250u	200	7 5	175J	M453
188	MACZE17D,10,5	xxx	17	40 ☑	7.2m	19	7 5	175J	M453
189	MBCZA17D,10,5	xxx	17	40 ☑	250u	200	7 5	175J	M454
190	MBCZB17D,10,5	xxx	17	.40 ☑	3 7m	26	7 5	175J	M454
191	MBCZC17D,10,5	xxx	17	400m☑	7 2m	19	7 5	175J	M454

SYMBOLS AND CODES EXPLAINED IN INTERPRETER

2. SILICON REFERENCE DIODES

IN ORDER OF (1) REF. VOLTAGE, (2) DISSIPATION, and (3) TYPE No.

LINE No	3 TYPE No.	TOLERANCE 1 20 10 5 2 ± (%)	NOM REF. VOLT (V)	2 MAX DISS @ 25°C (W)	TEST CUR Izt (A)	MAX. DYN IMP. (Ω)	TEMP. COEFF Tc	MAX. TEMP (°C)	DWG. No
1	MBCZD17D,10,5	xxx	17	40 ∅	250u	200	7 5	175J	M454
2	MBCZE17D,10,5	xxx	17	40 ∅	7 2m	19	7 5	175J	M454
3	MCCZA17D,10,5	xxx	17	40 ∅	250u	200	7 5	175J	M455
4	MCCZB17D,10,5	xxx	17	40 ∅	3 7m	26	7 5	175J	M455
5	MCCZC17D,10,5	xxx	17	40 ∅	7 2m	19	7 5	175J	M455
6	MCCZD17D,10,5	xxx	17	40 ∅	250u	200	7 5	175J	M455
7	MCCZE17D,10,5	xxx	17	40 ∅	7 2m	19	7 5	175J	M455
8	MDCZA17D,10,5	xxx	17	40 ∅	250u	200	7.5	150A	M410
9	MDCZB17D,10,5	xxx	17	40 ∅	3 7m	26	7 5	150A	M410
10	MDCZC17D,10,5	xxx	17	40 ∅	7 2m	19	7.5	150A	M410
11	MDCZD17D,10,5	xxx	17	40 ∅	250u	200	7.5	150A	M410
12	MDCZE17D,10,5	xxx	17	40 ∅	7 2m	19	7.5	150A	M410
13	MZC17A10	†	17	400m§	2 9m	47	8 4	175J	M468
14	MZC17B10	§†	17	400m§	250u	100		175J	M468
15	WZ541	5	17	40	5 0m	20		150A	A31e
16	1N5247	20†	17	50	7 4m			200A	DO7
17	1N5247A,B	§∅	17	50	7 4m	19	8 4	200A	DO7
18	MZ92-17	†	17	500m§	7 4m		7 8	150J	C103
19	S5247,A,B	xxx	17	500m	7 4m	19	8 4	175	DO41
20	7JZ17	†	17	750m	7 5m	20	7.5	175	DO15
21	7Z17,A,B,D	xxxx	17	750m	7 5m	20	7 5	175	DO27
22	7Z17C	∅	17	750m	7 5m	20	7 5	175	DO27
23	7ZM17,A,B,D	xxxx	17	750m	7 5m	20	7 5	175	DO41
24	7ZM17C	∅	17	750m	7 5m	20	7 5	175	DO41
25	1N2038-3	5	17	75	5 0m	120	8 0	150J	DO12
26	SV1022	5	17	75	5 0m	120 ∅	7 7	150	A82f
27	WZ922	5	17	75	5 0m	120 ∅		150A	A1fw
28	1E17Z,10,5	xxx	17	1 0	15m	18	7.5	150A	A52g
29	1M17Z,10,5	xxx	17	1.0	15m	18	7.5	175S	DO1
30#	1S232	10	17	1 0	17m	20		150J	A56a
31	AV2017	∅2	17	1 0	50m	14		150A	A19
32	CZ17,A,B,D	xxxx	17	1 0	20m	24	7 5	175	DO15
33	CZ17C	∅	17	1 0	20m	24	7 5	175	DO15
34	EVR17,A,B	xxx	17	1 0	15m	26		175A	DO27
35	JZ17,A,B,D	xxxx	17	1 0	14m	18	7 5	175	DO15
36	JZ17C	∅	17	1 0	14m	18	7 5	175	DO15
37	TZ17,A,B,D	xxxx	17	1 0	20m	24	7.5	175	DO27
38	TZ17C	∅	17	1 0	20m	24	7 5	175	DO27
39	Z17,A,B,D	xxxx	17	1 0	14m	18	7 5	175	DO27
40	Z17C	∅	17	1 0	14m	18	7 5	175	DO27
41	ZM17,A,B,D	xxxx	17	1 0	14m	18	7 0	175	DO41
42	ZM17C	∅	17	1 0	14m	18	7 0	175	DO41
43	1 5JZ17,A,B,D	xxxx	17	1 5	22m	12	8 4	175	DO15
44	1 5JZ17C	∅	17	1 5	22m	12	8.4	175	DO15
45	1 5M17Z,10,5	xxx	17	1 5	22m	12	7.5	175S	C12
46	1 5Z17,A,B,D	xxxx	17	1 5	22m	12	8.4	175	DO27
47	1 5Z17C	∅	17	1 5	22m	12	8 4	175	DO27
48	ZBC17	†	17	2 0 §	30m	7 0		150A	A1bc
49	1N5027	10	17	2 5	37m	7 2	7 5	150	A1gn
50	1N5027A	5	17	2 5	37m	7 2	7 5	150	A1gn
51	3TZ17,A,B,D	xxxx	17	3 0	50m	10	8 5	175	A1ec
52	3TZ17C	∅	17	3 0	50m	10	8 5	175	A1ec
53	ZCC17	†	17	3 0 §	50m	7 0		150A	A1ey
54♦	1N5354	20	17	5 0	70m			200A	A1ee
55▼	1N5354A	10	17	5 0	70m	2 5		200A	A1ee
56▼	1N5354B	5	17	5 0	70m	2 5		200A	A1ee
57▼	5ZS17,A,B	xxx	17	5 0 §	70m	2 5		200A	A1ts
58▼	CTZC17,A,B,D∅	xxxx	17	5 0 §	70m	2 5 ∅	7 5	175A	A1ey
59▼	CTZC17C∅	1	17	5 0 §	70m	2 5 ∅	7 5	175A	A1ey
60▼	CTZC17E∅	3	17	5 0 §	70m	2 5 ∅	7 5	175A	A1ey
61▼	TZC17,A,B,D	xxxx	17	5 0 §	70m	2 5 ∅	7 5	175A	A1ey
62▼	TZC17C	1	17	5 0 §	70m	2 5 ∅	7 5	175A	A1ey
63▼	TZC17E	3	17	5 0 §	70m	2 5 ∅	7 5	175A	A1ey
64	ZC17	†	17	5 0 §	70m	2 5		150A	A1ey
65	1N2047-3	5	17	10	500m	3 0	8 0	150J	DO4
66	1N2981,A,B	xxx	17	10	145m	4 0	7 5	175S	DO4
67#	1S274	10	17	10	170m	4.0		150J	S19g
68	10M17Z,10,5	xxx	17	10	14	4 0		175J	DO4
69	AV8017	∅2	17	10	500m	3 0		150A	S11
70	1N2815,A,B	xxx	17	50	740m	1 8	7 5	175S	C5a
71	1N3316	20	17	50	740m	1 8	7 5	175J	DO5
72	1N3316A	10	17	50	740m	1 8	7 5	175J	DO5
73	1N3316B	5	17	50	740m	1 8	7.5	175J	DO5
74	AV51017	5	17	50	740m	1 8	7 5	150C	C5a
75	250ZE17	10	17	250 §	10		8 0	190A	S83
76	250ZF17	10	17	250 §	10		8 0	190A	M56a
77▼#	BZ177	5	17 7	1 0	20m	20	7 7	175J	A60t
78	1N2048A	5	18		500m	3 0		150A	S19a
79	DSZ3018	10	18		40m	8 0	8 0		A266
80#	RZ18△	5	18	80m	2.0m	160		150A	C18e
81#	RZZ18	10	18	08	5.0m	210		150A	C18e
82	1N1989	10	18	150m	1.0m	70	9 2	150	C1
83	1N1989A	5	18	150m	1.0m	70	9 2	150	C1
84	1N1989B	1	18	150m	1.0m	70	9 2	150	C1
85#	AZ18∅	10	18	15	5 0m	70		170A	DO7
86#	Z18∅	5	18	150m	5 0m	140		150A	C18d
87#	ZZ18∅	10	18	15	5.0m	160		150A	C18d
88	1N1935,A,B	xx1	18	20	1.0m	70	9 2	150A	A82c
89#	RZ18A	10	18	20	220m	3 3	6 8	125A	DO5
90	1/4A18,A,B	xxx	18	25	3 5m	28	8 0	175	DO7
91	1/4M18Z,10,5	xxx	18	25	3 5m	28	7 6	175J	A1cy
92	25N18	20	18	25	3 5m	28		250	DO7
93	1N720,A	xx	18	.25	12m	17	7.7	175A	DO7
94	1N720B	20	18	25	12m	17			DO7
95	1N768-1	5	18	25	5 0m	100	8 0	150	DO7
96	1N4112	5	18	25	25m	100		200J	DO7
97	1N4705	5	18	25	05m			200A	DO14
98#	1S339	11	18	25	5 0m	80	8 0	150J	A1ce
99#	1S475	10	18	25	10m	75	8 0	150J	DO7
100#	02Z18A	5	18	250m	3 5m	100	9 2	175J	DO35
101#	1118	10∅	18	25	5 0m	90	8 0	150J	C18f
102#	BZY83C18	5	18	25	5 0m	110	9 5 △	150J	C1g
103#	BZY83D18	10	18	.25	5 0m	100	10 △	150J	C1g
104#	BZY85C18	5	18	25 §	5 0m	55	9 5 △	150J	A171f
105#	HS2180	5	18	25	5 0m			175A	DO7
106#	MR180C-H	5	18	.25	5 0m	90		250	DO7
107#	MZ18A	10	18	25	5 8m	33	6 8	150A	DO7
108#	MZ1018	6	18	250m	50m	45	8 5	175J	DO7
109	PD6020,A	xx	18	25	1 0m	70		150	A109
110	PD6061	5	18	.25	5 0m	18		150	A2c
111	SV142	5	18	25	5.0m	200	7 8	150	DO7
112#	SZ18	4	18	25	5 0m	125	80	150J	C1f
113	MC6020,A	xx	18	30	5 0m	41		175	A2m
114#	Z1A18	1	18	320m	5 0m	60	9 0 △	150A	C29
115#	Z1B18	5	18	320m	5.0m	60	9.0 △	150A	C29
116#	Z1C18	10	18	320m	5 0m	60	9 0 △	150A	C29
117#	Z1D18	15	18	320m	5.0m	60	9 0 △	150A	C29
118	1N667	5	18	.40	5 0m	26	8.0	200S	A31b
119	1N967,A,B	xxx	18	.40	7 0m	21	7.5	175S	DO7
120	JAN1N967B	5	18	.40	7 0m	21	8 5	175A	DO7
121	1N1962,A,B	xx1	18	.40	1 0m	70	9 2	150	DO7
122	1N3524	5	18	.40	5 0m	18	9 0	200A	DO7
123	JAN1N4112	5	18	400m	250u	100	9 0	175A	A1sx
124	1N5538	20	18	400m§	1 0m			175A	DO7
125	1N5538A	10	18	400m§	1 0m			175A	DO7
126	1N5538B	5	18	400m§	1 0m	100		175A	DO7
127▼	JAN1N5538B	5	18	400m	1 0m	100	8 5	200A	DO14
128	1N5538C	2	18	400m§	1.0m	100		175A	DO7
129	1N5538D	1	18	400m§	1 0m	100		175A	DO7
130▼	1N5742B	5	18	400m	5 0m	45	8 3	200J	DO35
131#	1S199	11	18	40	10m	30	8 0	150J	A1ce
132#	1S2180	10	18	400m	5 0m	50	8 0	150A	A1
133#	1S2180A	5	18	400m	5 0m	50	8 0	150A	A1
134#	5526	5	18	40	5.0m	55	7 5	125A	A1ce
135#	BZX46C18	5	18	400m	7 0	21	7 5	175J	DO35
136#	BZX55C18	5	18	400m	5 0m	55	7 5	150J	DO35
137▼#	BZX71B18	2	18	400m§	5 0m	45		175J	DO35
138#	BZX71C18	5	18	400m§	5 0m	45		200S	A9m
139#	BZX79C18	5	18	400m	5 0m	45	150	200J	A257
140#	BZX83C18	5	18	400m	5 0m	55	7 5	150J	DO35
141▼#	BZY85B18	2	18	400m	5 0m	45	7 2	150J	DO7
142#	BZY85D18	10	18	400m	5 0m	50	7 2	150J	A1su
143#	BZY88C18	5	18	.40	5 0m	50		175J	DO7
144#	BZY94C18	5	18	40				150J	DO7
145	C4022	10	18	40	7 0m	21		175	A134a
146	C6022	10	18	400m	1 0m	45	7 5	175A	M371c
147	C6022A	5	18	400m	1 0m	45	7 5	175A	M371c
148	C6122	10	18	400m	1 0m	45	7.5	175A	M131a
149	C6122A	5	18	400m	1 0m	45	7 5	175A	M131a
150	CZA18D,10,5	xxx	18	40 ∅	250u	200	7 5	175J	M371
151	CZB18D,10,5	xxx	18	40 ∅	3 5m	28	7 5	175J	M371
152	CZC18D,10,5	xxx	18	40 ∅	7 0m	21	7 5	175J	M371
153	CZD018,-5	xx	18	40	6 0m	12		175	DO7
154	CZD18D,10,5	xxx	18	40 ∅	250u	200	7 5	175J	M451
155	CZE18D,10,5	xxx	18	40 ∅	7 0m	21	7 5	175J	M451
156	HM18,A,B	xxx	18	400m§	7 0m	21		175A	A196c
157#	HS7180	5	18	40	5 0m			175A	DO7
158#	KS180A	5	18	400m	5 0m	150	11 △	150A	DO7
159#	KS180B	10	18	40	5 0m	200	12 △	150A	DO7
160	LR180CH	5	18	40	5 0m	85	7 0	150S	DO7
161	M4Z18,A,-20	xx*	18	40	7 0m	21		150A	A1kk
162#	M18Z	5 0	18	400m	5 0m	55	7 5	150A	DO7
163	MACZA18D,10,5	xxx	18	40 ∅	250u	200	7 5	175J	M453
164	MACZB18D,10,5	xxx	18	40 ∅	3 5m	28	7 5	175J	M453
165	MACZC18D,10,5	xxx	18	40 ∅	7 0m	21	7 5	175J	M453
166	MACZD18D,10,5	xxx	18	40 ∅	250u	200	7 5	175J	M453
167	MACZE18D,10,5	xxx	18	40 ∅	7 0m	21	7 5	175J	M453
168	MBCZA18D,10,5	xxx	18	40 ∅	250u	200	7 5	175J	M454
169	MBCZB18D,10,5	xxx	18	40 ∅	3 5m	28	7 5	175J	M454
170	MBCZC18D,10,5	xxx	18	400m∅	7 0m	21	7 5	175J	M454
171	MBCZD18D,10,5	xxx	18	40 ∅	250u	200	7 5	175J	M454
172	MBCZE18D,10,5	xxx	18	40 ∅	7 0m	21	7 5	175J	M454
173	MCCZA18D,10,5	xxx	18	40 ∅	250u	200	7.5	175J	M455
174	MCCZB18D,10,5	xxx	18	40 ∅	3 5m	28	7 5	175J	M455
175	MCCZC18D,10,5	xxx	18	40 ∅	7 0m	21	7 5	175J	M455
176	MCCZD18D,10,5	xxx	18	40 ∅	250u	200	7 5	175J	M455
177	MCCZE18D,10,5	xxx	18	40 ∅	7 0m	21	7 5	175J	M455

SYMBOLS AND CODES EXPLAINED IN INTERPRETER

2. SILICON REFERENCE DIODES

IN ORDER OF (1) REF. VOLTAGE, (2) DISSIPATION, and (3) TYPE No.

LINE No	3 TYPE No.	TOLERANCE 1 20 10 5 2 ± (%)	NOM. REF. VOLT. (V)	2 MAX. DISS. @ 25°C (W)	TEST CUR. Izt (A)	MAX. DYN. IMP. (Ω)	TEMP. COEFF Tc	MAX. TEMP (°C)	DWG. No.
1	MDCZA18D,10,5	xxx	18	40 ∅	250u	200	7 5	150A	M410
2	MDCZB18D,10,5	xxx	18	.40 ∅	3 5m	28	7 5	150A	M410
3	MDCZC18D,10,5	xxx	18	.40 ∅	7 0m	21	7.5	150A	M410
4	MDCZD18D,10,5	xxx	18	.40 ∅	250u	200	7.5	150A	M410
5	MDCZE18D,10,5	xxx	18	40 ∅	7 0m	21	7 5	150A	M410
6	MZ500-22	10	18	4 §	7 0m	25 ∅	8.5	175J	DO7
7	MZC18A10	†	18	400m§	2.8m	. 52	8.5	175J	M468
8	MZC18B10	§†	18	400m§	250u	100		175J	M468
9	WZ542	5	18	40	5 0m	30		150A	A31e
10#	Z5A18	1	18	400m§	5 0m	55	9.0 △	200J	A1hs
11#	Z5B18	5	18	400m§	5 0m	55	9.0 △	200J	A1hs
12#	Z5C18	10	18	400m§	5.0m	55	9.0 △	200J	A1hs
13#	Z5D18	15	18	400m§	5 0m	55	9 0 △	200J	A1hs
14#	ZF18	5	18	400m	5 0m	55	9.0	150J	DO7
15#	ZG18	10	18	400m	5 0m	55	9.0	150J	DO7
16#	ZP18#	5	18	400m	5.0m	55	9.0	150J	DO7
17	1/2Z18T5	5	18	50	7 0m	16		175	A94f
18	1N3405∅	10	18	.50	10m	35	5 0	200A	P5
19	1N3418	10	18	50	1 0m	190	6.3	200A	P5
20	1N5248	20†	18	.50	7 0m			200A	DO7
21	1N5248A,B	§∅	18	.50	7 0m	21	8 5	200A	DO7
22#	DZ18A	10	18	.50	11m	33	6 8	150A	A100
23▼	HEPZ0228-RT	10	18	500m	7 0	48			C103
24	IDAZ3405,A,B,C∅	xxxx	18	500m	10m	35	5.0	200A	A1hc
25	MTZ620,A	xx	18	50	5 0m	41		175A	A60e
26	MZ92-18	†	18	500m§	7 0m		7 9	150J	C103
27	PS8919	5	18	50	10m	14	9 0	150	A60p
28	S5248,A,B	xxx	18	500m	7.0m	21	8 5	175	DO41
29#	ZSF18	1	18	500m	7 0m	10	1.0	150S	M487a
30#	Z0A18	1	18	520m	5.0m	25	9.0 △	150J	A1ef
31#	Z0B18	5	18	520m	5 0m	25	9 0 △	150J	A1ef
32#	Z0C18	10	18	520m	5 0m	25	9 0 △	150J	A1ef
33#	Z0D18	15	18	520m	5 0m	25	9.0 △	150J	A1ef
34	1N4638	5	18	60	7 0m	750	8 5	200A	DO14
35#	NTO 6C18	5	18	600m	5 0m	55		125J	M498
36#	UZ18	10	18	.60	33m	21	8 5	135A	DO3
37#	ZC018	5	18	60	1 0m	65	7.0	100	A3k
38#	ZD018	10	18	60	1 0m	65	7 0	100	A3k
39#	ZW18	5	18	600m	5 0m	55	9 0	150J	A1bg
40	ZZ18△	10	18	60	6 0m	17	8 0	175A	M222
41	.7JZ18	†	18	750m	7.0m	21	7 5	175	DO15
42	7Z18,A,B,D	xxxx	18	750m	7 0m	21	7.5	175	DO27
43	7Z18C	∅	18	750m	7 0m	21	7.5	175	DO27
44	.7ZM18,A,B,D	xxxx	18	750m	7 0m	21	7.5	175	DO41
45	7ZM18C	∅	18	750m	7 0m	21	7.5	175	DO41
46	1N1515,A	xx	18	.75	8 0m	16	8.5	200S	DO12
47	1N2039A	5	18	75	5 0m	200	8 0	150J	DO12
48	1N3685	20	18	750m	7 0m	21	7 5	175S	A1az
49	1N3685A	10	18	750m	7.0m	21	7.5	175S	A1az
50	1N3685B	5	18	750m	7 0m	21	7 5	175S	A1az
51	MC6120,A	xx	18	75	10m	41		175A	A2d
52	MMZ18,A,-20	xx*	18	75	7 0m	21		150A	A1kk
53	MZ18T20,10,5	xxx	18	75	8 0m	24	8 5	165A	A152
54	SV1023	5	18	75	5 0m	200 ∅	7 8	150	A82f
55	WZ923	5	18	75	5 0m	200 ∅		150A	A1fw
56	1A18M,A,B	xxx	18	1 0	14m	20		75A	DO15
57	1E18Z,10,5	xxx	18	1.0	14m	20	7.5	150A	A52g
58	1M18Z,10,5	xxx	18	1 0	14m	20	7.5	175S	DO1
59	1N1428	5	18	1 0	10m	20 ∅	8.0	200A	A154
60	1N1526,A	xx	18	1 0	10m	25	8.5	200S	DO3
61	1N1777,A	xx	18	1.0	50m	11		175S	A220
62	1N1879	10	18	1 0	25m	9 0	6.2	200C	A126
63	1N1879A	5	18	1 0	25m	9 0	6 2	200C	A126
64	1N1879B	1	18	1 0	25m	2 6 △	6 2	175A	DO13
65	1N3026	20	18	1 0	14m	20		175A	A31a
66	1N3026A	10	18	1 0	14m	20		175A	A31a
67	1N3026B	5	18	1 0	14m	20		175A	A31a
68	JAN1N3026B	5	18	1 0	14m	20	8 5	175A	A31c
69	1N4168	20	18	1 0	14m	20	7 5	175	DO29
70	1N4168A	10	18	1 0	14m	20	7.5	175	DO29
71	1N4168B	5	18	1 0	14m	20	7 5	175	DO29
72	1N4333,A,B	xxx	18	1 0	14m	20	7 5	300S	DO7
73♦	1N4410	20	18	1 0	14m	10		175S	A266a
74	1N4410A	10	18	1 0	14m	10	7.5	175A	A1cm
75	1N4410B	5	18	1.0	14m	10	7 5	175A	A1cm
76	1N4667	5	18	1 0	14m	600	8.5	200A	DO15
77	1N4746	10	18	1 0	14m	20		200A	A1ay
78	1N4746A	5	18	1 0	14m	20		200A	A1ay
79	1N5569	20	18	1 0 §	14m			200A	A196d
80	1N5569A	10	18	1 0 §	14m	20		200A	A196d
81	1N5569B	5	18	1 0 §	14m	20		200A	A196d
82	1N5639		18	1 0	1 0m		8 8	175A	DO13
83	1N5639A		18	1 0	1 0m		8 8	175A	DO13
84	1R18,A,B	xxx	18	1 0	14m	20	7 5	175A	A52c
85#	1S233	10	18	1 0	17m	20		150J	A56a
86#	1S485	10	18	1 0	20m	65	8 0	150J	A115
87#	1S3018	xx	18	1 0	20m	20	8 0	150	A3
88	1Z18,A,B	xxx	18	1 0	14m	20		150	A1ay
89	1Z18T20,10,5	xxx	18	1 0	10m	38	8 5	165A	A89c
90#	1ZC18T10,5	xx	18	1 0	10m	42	8 5	165A	A31p
91	AV7	10	18	1 0	50m	14		150A	A19
92	AV2018	∅2	18	1 0	50m	14		150A	A19
93	BZX29C18	5	18	1.0	10m	20	7.5	175J	A1cd
94#	BZX61C18	5	18	1 0	10m	20	6 0	175J	A3y
95♦	BZX85C18	5	18	1 0	15m	20	8 5	150A	DO15
96	CD31-00019	5	18	1 0	14m	20	8 0	200A	A1ce
97	CD31-12026	5	18	1 0	14m	20		200A	A1ce
98	CD32-12056	5	18	1 0	14m	20			
99	CZ18,A,B,D	xxxx	18	1.0	14m	20	7.5	175	DO15
100	CZ18C	∅	18	1.0	14m	20	7.5	175	DO15
101	EVR18,A,B	xxx	18	1.0	14m	28		175A	DO27
102#	EZ18A	10	18	1.0	22m	750	6.8		A1em
103	G18T20,10,5	xxx	18	1.0	14m	20		175	DO15
104#	GZ18	10	18	1.0	25m	40 △		150A	S115
105	HW18,A,B	xxx	18	1.0	14m	20		175	A196
106	IDA1Z18,A,B,C∅	xxxx	18	1.0	25m			200A	A1ht
107	JZ18,A,B,D	xxxx	18	1 0	14m	20	7.5	175	DO15
108	JZ18C	∅	18	1 0	14m	20	7.5	175	DO15
109	LPM18,A,-20	xx*	18	1 0	14m	20		150A	A1kk
110	LPZT18∅	10	18	1.0	25m	9.0	6.4	185	A86
111	PS10026B	5	18	1 0	14m	20		175A	A60p
112	PS10070	5	18	1 0	14m	16	9.2	150	A60p
113	TZ18,A,B,D	xxxx	18	1 0	20m	25	7.5	175	DO27
114	TZ18C	∅	18	1 0	20m	25	7.5	175	DO27
115	UZ8718	5	18	1 0	14m	20	8.0	175	A146h
116	UZ8818	10	18	1.0	14m	20	8.0	175	A146h
117	VR18,A,B	xxx	18	1 0	14m	20		125A	A1b
118#	Z4A18	1	18	1 0	25m	15	9.0 △	150J	A1ef
119#	Z4B18	5	18	1 0	25m	15	9.0 △	150J	A1ef
120#	Z4C18	10	18	1 0	25m	15	9.0 △	150J	A1ef
121#	Z4D18	15	18	1 0	25m	15	9.0 △	150J	A1ef
122	Z4XL18,B	xx	18	1 0	20m	50	8 5	165A	DO13
123	Z18,A,B,D	xxxx	18	1.0	14m	20	7.5	175	DO27
124	Z18C	∅	18	1 0	14m	20	7.5	175	DO27
125	ZA18,A,B	xxx	18	1.0	14m	20		150C	A1ew
126	ZB18#	†	18	1 0 §	14m	20		150A	A1bc
127	ZD18∅,A,B	xxx	18	1 0	14m	18	7.5	175A	A1cm
128#	ZEC18	20	18	1 0	10m	42	.09	165A	DO3
129#	ZF18A	10	18	1 0	22m	16	6 8	150A	DO13
130	ZH18,A,B	xxx	18	1.0	14m	20	7.5	175A	DO1
131	ZM18,A,B,D	xxxx	18	1 0	14m	20	7.5	175	DO41
132	ZM18C	∅	18	1 0	14m	20	7.5	175	DO41
133#	7726	5	18	1.1	20m	18	7.5	125A	A1bu
134#	BZY92C18	5	18	1 1	25m	15	7 0	150J	DO13
135	1N4838,A,B	xxx	18	1.2	14m	20	8.5	175	DO29
136#	BZX67C18	5	18	1 3	25m	15	7.0	150J	S287
137#	ZD18#	5	18	1 3	25	15	7.0	150J	DO13
138	ZM18∅	10	18	1.3	25	15	7.0	150J	DO13
139#	ZU18	10	18	1 3	25	15	7 0	150J	A1bg
140#	ZY18	5	18	1 3	25	15	7 0	150J	A1bg
141▼	1N3795	20	18	1 5	21m	13	8 5	175S	C14∅
142▼	1N3795A	10	18	1 5	21m	13	8.5	175S	C14∅
143▼	1N3795B	5	18	1 5	21m	13	8.5	175S	C14∅
144	1N4471	5	18	1 5	14m	11		175A	A196
145	JAN1N4471	10	18	1.5	14m	11	8 5	175A	A1v
146#	1S4018,A	xx	18	1.5	20m	7 5	8.0	150A	DO1
147	1.5JZ18,A,B,D	xxxx	18	1 5	21m	13	8.5	175	DO15
148	1.5JZ18C	∅	18	1.5	21m	13	8 5	175	DO15
149	1 5R18,A,B	xxx	18	1 5	21m	18	7.5	175A	A52c
150	1.5Z18,A,B,D	xxxx	18	1 5	21m	13	8 5	175	DO27
151	1.5Z18C	∅	18	1 5	21m	13	8.5	175	DO27
152#	BZY95C18	5	18	1.5	20m	11	12	175J	DO1
153	MC6320,A	xx	18	1 5	50m	35			A1g
154	MZ1000-19	10	18	1 5 §	14m	30 ∅	8.5	175J	A1ay
155#	SZ18C	5	18	1 5	20m	65	8.0	160A	A26
156#	Z2A18	1	18	1.5	25m	14	9.0 △	150J	A244
157#	Z2B18	5	18	1 5	25m	14	9 0 △	150J	A244
158#	Z2C18	10	18	1 5	25m	14	9 0 △	150J	A244
159#	Z2D18	15	18	1 5	25m	14	9 0 △	150J	A244
160#	Z3A18	1	18	1 5	100m	12	9 0 △	150J	S4f
161#	Z3B18	5	18	1 5	100m	12	9.0 △	150J	S4f
162#	Z3B18OCF	20§∅	18	1 5	20m	13	8.5	175J	DO1
163#	Z3C18	10	18	1.5	100m	12	9.0 △	150J	S4f
164#	Z3D18	15	18	1.5	100m	12	9 0 △	150J	S4f
165#	ZC2018	5	18	1.8	1.0m	65	7.0	150	DO3
166#	ZD2018	10	18	1 8	1.0m	65	7 0	150	DO3
167	2R18,A,B	xxx	18	2 0	28m	18	7 5	175A	DO27
168	2VR18,A,B	xxx	18	2 0	28m	18			A3e
169	LMZ18,A,-20	xx*	18	2 0	28m	10		150A	A1kk
170	ZBC18	†	18	2.0 §	28m	8 0		150A	A1bc
171#	VR18F	5	18	2 2	20m	22		200S	DO3
172	1N5028	10	18	2 5	35m	7.8	7 5	150	A1gn
173	1N5028A	5	18	2 5	35m	7 8	7 5	150	A1gn
174#	BZX70C18	5	18	2.5	20m	11	120	150J	A171b
175	1N5073	5	18	3 0	40m	8 0		175A	A146j
176#	1S495	10	18	3 0	80m	65	8.0	150J	S112
177	3R18,A,B	xxx	18	3.0	42m	10	7 5	175A	A1rw
178	3TZ18,A,B,D	xxxx	18	3.0	50m	10	8.5	175	A1ec
179	3TZ18C	∅	18	3 0	50m	10	8.5	175	A1ec
180	3VR18,A,B	xxx	18	3.0	42m	10			A222
181	3Z18,A,B	xxx	18	3 0	42m	10		150	A222
182	CZ5073	10	18	3 0	40m	8 0	160	175A	A196e
183#	FDZ18A	10	18	3 0 ∅	65m	5 5	6.8	150A	S303
184	M3Z18,A	xx	18	3 0	43m	8.2		150A	A1kk
185	MZ718	5	18	3 0	40m	8.0	8.0	175A	A146j
186	MZ818	10	18	3 0	40m	8 0	8 0	175A	A146j
187	MZ918	20	18	3.0	40m	8 0	8 0	175A	A146j
188#	NT3C18	5	18	3 0	5.0m	60		125J	S43a
189	UZ718	5	18	3 0	40m	8 0	8.0	175A	A60
190	UZ818	10	18	3 0	40m	8.0	8 0	175A	A146f
191	UZ918	20	18	3 0	40m	8.0	8 0	175A	A60
192	ZAC18,A,B	xxx	18	3 0	14m	20		150C	A1ey
193	ZCC18	†	18	3.0 §	40m	8 0		150A	A1ey
194	1N1596,A	xx	18	3 5	35m	9.0	8 5	200S	DO4
195	3Z18T20,10,5	xxx	18	3 5	35m	14	8 5	165	DO4
196#	4GZ18A	10	.18	4.0	140m	250	7 5		S19q
197	1N4024,A,B	xxx	18	5.0	70m	4.0	8 5	180A	S82
198	1N4964	5	18	5.0	65m	4 0		175A	A146m
199	JAN1N4964	5	18	5 0	65m	4 0	8 5	175A	A248f
200♦	1N5355	20	18	5 0	65m			200A	A1ee

SYMBOLS AND CODES EXPLAINED IN INTERPRETER

2. SILICON REFERENCE DIODES

IN ORDER OF (1) REF. VOLTAGE, (2) DISSIPATION, and (3) TYPE No.

LINE No	3 TYPE No	TOLERANCE 1 20 10 5 2 ± (%)	NOM REF. VOLT. (V)	2 MAX. DISS. @ 25°C (W)	TEST CUR. Izt (A)	MAX. DYN. IMP (Ω)	TEMP. COEFF Tc	MAX. TEMP (°C)	DWG. No.
1▼	1N5355A	10	18	5 0	65m	2 5		200A	A1ee
2▼	1N5355B	5	18	5.0	65m	2 5		200A	A1ee
3▼	5ZS18,A,B	xxx	18	5 0 §	65m	2 5		200A	A1ts
4#	5326	10∅	18	5.0	40m	9.0		150J	A9h
5▼	CTZC18,A,B,D∅	xxxx	18	5 0 §	65m	2 5 ∅	7.5	175A	A1ey
6▼	CTZC18C∅	1	18	5 0 §	65m	2 5 ∅	7 5	175A	A1ey
7▼	CTZC18E∅	3	18	5.0 §	65m	2 5 ∅	7.5	175A	A1ey
8	DSZ5718	5	18	5.0	65m	4 0	8.5	175A	A60r
9	DSZ5818	10	18	5 0	65m	4 0	8 5	175A	A60r
10	MZ5718	5	18	5 0	65m	4 0	8 0	175A	A60f
11	MZ5818	10	18	5 0	65m	4.0	8.0	175A	A60f
12	MZ5918	20	18	5 0	65m	4 0	8 0	175A	A60f
13▼	TZC18,A,B,D	xxxx	18	5.0 §	65m	2 5 ∅	7 5	175A	A1ey
14▼	TZC18C	1	18	5 0 §	65m	2 5 ∅	7.5	175A	A1ey
15▼	TZC18E	3	18	5 0 §	65m	2 5 ∅	7.5	175A	A1ey
16▼	UZ5718	5	18	5 0	65m	4 5	8 5	175A	A146m
17♦	UZ5818	10	18	5 0	65m	4.5	8 5	175A	A146m
18	UZ5918	20	18	5 0	65m	4 0 ∅	8 0	175A	A146m
19	ZC18	†	18	5 0 §	65m	2 5		150A	A1ey
20#	VR18E	5	18	5 8	20m	22		200S	DO4
21#	KR51	10	18	8.0	50m	5 0	9 5	150A	S186
22	UZ4718	5	18	8.0	65m	4 0		175A	A146m
23	UZ4818	10	18	8 0	65m	4 0		175A	A146m
24	1N1357,A	xx	18	10	150m	3 0		175A	DO4
25	1N1357B	20	18	10	150m	3 0			S11e
26	1N1357C,CA∅	xx	18	10 §	15	3 0		175J	S19a
27	1N1419	5	18	10	100m	5 0 ∅	8 0	175C	S154
28	1N1607,A	xx	18	10	110m	4 0	8 5	200S	DO4
29	1N1819	10	18	10	500m	3 0	7 0	150A	S19a
30	1N1819A	5	18	10	500m	3 0	7 0	150A	S19a
31	1N1819C,CA∅	xx	18	10	500m	3 0	7 0	150A	S19a
32	1N1895	10	18	10	25m	9 0	6 2	200A	S82
33	1N1895A	5	18	10	25m	9 0	6 2	200A	S82
34	1N2048-1	5	18	10	500m	3 0	8.0	150J	DO4
35	1N2982,A,B	xxx	18	10	140m	4 0		175C	DO4∅
36	JAN1N2982B,RB	5	18	10	140m	4 0	8 5	150C	DO4
37	1N4268	20	18	10	140m	4 0	7.5	175C	S134
38	1N4268A	10	18	10	140m	4 0	7 5	175C	S134
39	1N4268B	5	18	10	140m	4 0	7 5	175C	S134
40	JAN1N4268B	5	18	10 §	140m	4 0	8 5	175S	S134a
41#	1S275	10	18	10	170m	4 0		150J	S19g
42#	1S5018,A	xx	18	10	50m	5 0	8 0	150C	DO4
43#	1S5018C∅	10	18	10	50m	5 0	8 0	150C	DO4
44#	1S6018	10	18	10	100m	5 0	6 0	150	DO4
45#	1S6018A	5	18	10	100m	5 0	6 0	150	DO4
46	10PZ18,A,B,D	xxxx	18	10	140m	4 0	7 5	175	DO4
47	10PZ18C	∅	18	10	140m	4 0	7 5	175	DO4
48	10RZ18,A,B,D	xxxx	18	10	500m	3 0	7 0	155	DO4
49	10RZ18C	∅	18	10	500m	3 0	7 0	155	DO4
50	10Z18T20,10,5	xxx	18	10	110m	6 0	8.5	165	DO4
51	AV107	10	18	10	500m	3 0		150A	S11
52	AV8018	∅2	18	10	500m	3 0		150A	S11
53#	CC4018	5	18	10	15m	15	6 3	150	S19
54#	CD4018	10	18	10	15m	15	6 3	150	S19
55#	GZ18A	10	18	10 ∅	110m	3 3	6 8	150A	DO4
56#	OAZ234	5	18	10	20m	54		150J	DO4
57#	PZ18A	10	18	10 ∅	110m	3 3	6 8	150A	S95a
58	PZT18∅	10	18	10 ∅	25m	9.0	6 4	185	S82
59	UZ7718	5	18	10	130m	3 5	8 0	175	S277∅
60	UZ7818	10	18	10	130m	3 5	8 0	175	S277∅
61	UZ7918	20	18	10	130m	3.5	8 0	175	S277∅
62#	Z5D180CF	20§∅	18	10	50m	5.0	7 5	150J	DO4
63#	ZC5018	5	18	10	100m	5.0	6 9	150A	S19
64#	ZD5018	10	18	10	100m	5.0	6 9	150A	S19
65#	BZZ26	5	18	13	20m	14	16	150	DO4
66#	4126	10∅	18	15	200m	1 3		150J	S87
67#	4226	10∅	18	15	200m	1.3		150J	S87
68#	BZY93C18	5	18	20 §	500m	1 5	12	175J	DO4∅
69#	SZ18B	5	18	25	100m	3 0	8 0	150B	S16
70#	ZL18	10	18	25 ∅	25	15	7 0	150J	M41
71#	ZX18	5	18	25 ∅	25	15	7 0	150J	M41
72#	4326	10∅	18	30	200m	1.3		150J	S87
73#	4426	10∅	18	30	200m	1 3		150J	S87
74	1N2816,A,B	xxx	18	50	70	2 0	7 5	175S	C5a
75	JAN1N2816B,RB	5	18	50	700m	2.0	8.5	150C	C5a
76	1N3317	20	18	50	700m	2.0	7 5	175J	DO5
77	1N3317A	10	18	50	700m	2.0	7 5	175J	DO5
78	1N3317B	5	18	50	700m	2.0	7 5	175J	DO5
79	JAN1N3317B,RB	5	18	50	700m	2.0	8 5	150	DO5
80	50T18,A,B	xx*	18	50	70	2.0	7 5		S19e
81	AV51018	5	18	50	700m	2 0	7 5	150C	C5a
82	75TE18,A	xx	18	54	56	9.0m	1 0	125C	TO36
83#	BZY91C18	5	18	75 §	2	.70	9 0	175J	DO5∅
84	80TF18,A	xx	18	80	56	9 0m	1 0	125C	M117c
85#	4526	10∅	18	100	280m	1 0		150J	S84
86#	4626	10∅	18	100	280m	1 0		150J	S84
87#	ZC718	5	18	100 §	100	2 0	7 4	175J	S125d∅
88	250ZE18	10	18	250 §	10		8 0	190A	S83
89	250ZF18	10	18	250 §	10		8 0	190A	M56a
90	LID18,A	xx	18	400	6 8m	22		150A	M401
91	HRE18 5	5	18 5		10m	30	50	70A	A126a
92	HRE18 5A	5	18 5		10m	30	50	125A	A126a
93	TC18 5A5A	5△∅	18 5	1.0	10m	30	05	175A	A1ss
94	1N4060	5	18.5	1 5	10m	30	50	100	A1ss
95	1N4060A	5	18 5	1.5	10m	30	20	100	A1ss
96	1N1737	5	18.6	60	7 5m	60	80	150C	A1gt
97	1N1737A	5	18.6	60	7.5m	60	40	150C	A1gt
98	1N2048B	5	19		500m	3 0		150A	S19a
99	1N229∅	10	19	150m	200u			150A	C1
100	1N229A∅	5	19	150m	200u			150A	C1
101	1N1317,A	xx	19	.15	.20m		8 5	150A	C1
102	IDAZ229,A,B,C∅	xxxx	19	150m	200u			150A	A1hc
103#	RD19A	10	19	.20	5 0m	80	8.5	150S	A1dw
104	1/4A19,A,B	xxx	19	.25	3.3m	30	8 0	175	DO7
105	1/4M19Z,10,5	xxx	19	.25	3 3m	30	7 8	175J	A1cy
106	25N19	20	19	.25	3.3m	30		250	DO7
107▼	1N768	10	19	250m	5 0m	100	8.0	150	DO7
108	1N768-2	5	19	.25	5 0m	100	8 0	150	DO7
109▼	1N768A	5	19	250m	5.0m	100	8.0	150	DO7
110	1N4113	5	19	.25	.25m	150		200J	DO7
111	1N4706	5	19	.25	.05m			200A	DO14
112#	1S762	xxx	19	.25	5.0m	80	9.0	150	C1d
113	CD3129	5	19	.25	5.0m	200 ∅	9.2	150A	A1sj
114	SV143	5	19	.25	5 0m	200	7 8	150	DO7
115#	SZ19	4	19	.25	5.0m	145	80	150J	C1f
116	JAN1N4113	5	19	400m	250u	150	9.0	175A	A1sx
117	1N5539	20	19	400m§	1 0m			175A	DO7
118	1N5539A	10	19	400m§	1.0m			175A	DO7
119	1N5539B	5	19	400m§	1 0m	100		175A	DO7
120▼	JAN1N5539B	5	19	400m	1 0m	100	8 6	200A	DO14
121	1N5539C	2	19	400m§	1 0m	100		175A	DO7
122	1N5539D	1	19	400m§	1.0m	100		175A	DO7
123	CZA19D,10,5	xxx	19	40 ∅	250u	200	7.5	175J	M371
124	CZB19D,10,5	xxx	19	40 ∅	3.3m	30	7 5	175J	M371
125	CZC19D,10,5	xxx	19	.40 ∅	6.5m	23	7.5	175J	M371
126	CZD19D,10,5	xxx	19	40 ∅	250u	200	7 5	175J	M451
127	CZE19D,10,5	xxx	19	40 ∅	6 5m	23	7 5	175J	M451
128	MACZA19D,10,5	xxx	19	.40 ∅	250u	200	7 5	175J	M453
129	MACZB19D,10,5	xxx	19	.40 ∅	3.3m	30	7 5	175J	M453
130	MACZC19D,10,5	xxx	19	40 ∅	6 5m	23	7 5	175J	M453
131	MACZD19D,10,5	xxx	19	.40 ∅	250u	200	7 5	175J	M453
132	MACZE19D,10,5	xxx	19	40 ∅	6.5m	23	7 5	175J	M453
133	MBCZA19D,10,5	xxx	19	40 ∅	250u	200	7 5	175J	M454
134	MBCZB19D,10,5	xxx	19	.40 ∅	3 3m	30	7.5	175J	M454
135	MBCZC19D,10,5	xxx	19	400m∅	6 5m	23	7 5	175J	M454
136	MBCZD19D,10,5	xxx	19	40 ∅	250u	200	7 5	175J	M454
137	MBCZE19D,10,5	xxx	19	.40 ∅	6.5m	23	7.5	175J	M454
138	MCCZA19D,10,5	xxx	19	40 ∅	250u	200	7 5	175J	M455
139	MCCZB19D,10,5	xxx	19	40 ∅	3 3m	30	7 5	175J	M455
140	MCCZC19D,10,5	xxx	19	40 ∅	6 5m	23	7 5	175J	M455
141	MCCZD19D,10,5	xxx	19	.40 ∅	250u	200	7 5	175J	M455
142	MCCZE19D,10,5	xxx	19	.40 ∅	6 5m	23	7 5	175J	M455
143	MDCZA19D,10,5	xxx	19	40 ∅	250u	200	7 5	150A	M410
144	MDCZB19D,10,5	xxx	19	40 ∅	3 3m	30	7 5	150A	M410
145	MDCZC19D,10,5	xxx	19	40 ∅	6 5m	23	7 5	150A	M410
146	MDCZD19D,10,5	xxx	19	.40 ∅	250u	200	7 5	150A	M410
147	MDCZE19D,10,5	xxx	19	.40 ∅	6 5m	23	7 5	150A	M410
148	MZC19A10	†	19	400m§	2.6m	58	8.6	175J	M468
149	MZC19B10	§†	19	400m§	250u	150		175J	M468
150	SVR19A	5	19	40	7 5m	45	1 △	175S	DO7
151	SVR19B	5	19	.40	7 5m	45	.5 △	175S	DO7
152	WZ543	5	19	.40	5 0m	30		150A	A31e
153	1N5249	20†	19	.50	6.6m			200A	DO7
154	1N5249A,B	§∅	19	50	6.6m	23	8.6	200A	DO7
155	MZ92-19	†	19	500m§	6 6m		8 0	150J	C103
156	S5249,A,B	xxx	19	500m	6.6m	23	8.6	175	DO41
157	.7JZ19	†	19	750m	6.5m	24	7.5	175	DO15
158	.7Z19,A,B,D	xxxx	19	750m	6 5m	24	7 5	175	DO27
159	.7Z19C	∅	19	750m	6 5m	24	7 5	175	DO27
160	7ZM19,A,B,D	xxxx	19	750m	6.5m	24	7.5	175	DO41
161	7ZM19C	∅	19	750m	6.5m	24	7.5	175	DO41
162	1N2039	5	19	75	5.0m	200	8.0	150J	DO12
163	1N2039-2	5	19	75	5.0m	200	8 0	150J	DO12
164	SV1024	5	19	.75	5 0m	200 ∅	7 8	150	A82f
165	WZ924	5	19	.75	5 0m	200 ∅		150A	A1fw
166	1E19Z,10,5	xxx	19	1 0	13m	21	7 5	150A	A52g
167	1M19Z,10,5	xxx	19	1 0	13m	21	7.5	175S	DO1
168#	1S234	10	19	1 0	17m	20		150J	A56a
169	AV2019	∅2	19	1 0	50m	20		150A	A19
170	CZ19,A,B,D	xxxx	19	1 0	20m	26	7.5	175	DO15
171	CZ19C	∅	19	1 0	20m	26	7.5	175	DO15
172	EVR19,A,B	xxx	19	1.0	14m	30		175A	DO27
173	JZ19,A,B,D	xxxx	19	1.0	20m	26	7.5	175	DO15
174	JZ19C	∅	19	1 0	20m	26	7 5	175	DO15
175#	RD19B	10	19	1 0	20m	15	8.5	150S	A164
176	TZ19,A,B,D	xxxx	19	1 0	20m	26	7 5	175	DO27
177	TZ19C	∅	19	1 0	20m	26	7 5	175	DO27
178	Z19,A,B,D	xxxx	19	1.0	13m	21	7.5	175	DO27
179	Z19C	∅	19	1.0	13m	21	7.5	175	DO27
180	ZM19,A,B,D	xxxx	19	1.0	13m	21	7.5	175	DO41
181	ZM19C	∅	19	1.0	13m	21	7 5	175	DO41

SYMBOLS AND CODES EXPLAINED IN INTERPRETER

2. SILICON REFERENCE DIODES

IN ORDER OF (1) REF. VOLTAGE, (2) DISSIPATION, and (3) TYPE No.

LINE No	TYPE No	TOLERANCE 20 10 5 2 ± (%)	NOM. REF VOLT. (V)	MAX DISS. @ 25°C (W)	TEST CUR Izt (A)	MAX. DYN IMP (Ω)	TEMP COEFF Tc	MAX TEMP (°C)	DWG. No.
1	1 5JZ19,A,B,D	xxxx	19	1 5	20m	14	8.6	175	DO15
2	1 5JZ19C	∅	19	1 5	20m	14	8 6	175	DO15
3	1 5M19Z,10,5	xxx	19	1 5	20m	14	7 5	175S	C12
4	1.5Z19,A,B,D	xxxx	19	1 5	20m	14	8 6	175	DO27
5	1.5Z19C	∅	19	1 5	20m	14	8 6	175	DO27
6	ZBC19	†	19	2 0 §	26m	9.0		150A	A1bc
7	1N5029	10	19	2 5	33m	8 4	7 5	150	A1gn
8	1N5029A	5	19	2 5	33m	8 4	7 5	150	A1gn
9	3TZ19,A,B,D	xxxx	19	3 0	50m	10	8 5	175	A1ec
10	3TZ19C	∅	19	3.0	50m	10	8.5	175	A1ec
11#	RD19C	10	19	3 0	60m	10	8 5	150S	S42
12	ZCC19	†	19	3.0 §	40m	9.0		150A	A1ey
13♦	1N5356	20	19	5.0	65m			200A	A1ee
14▼	1N5356A	10	19	5.0	65m	3.0		200A	A1ee
15▼	1N5356B	5	19	5.0	65m	3.0		200A	A1ee
16▼	5ZS19,A,B	xxx	19	5.0 §	65m	3.0		200A	A1ts
17▼	CTZC19,A,B,D∅	xxxx	19	5 0 §	65m	3 0 ∅	7 5	175A	A1ey
18▼	CTZC19C∅	1	19	5 0 §	65m	3 0 ∅	7 5	175A	A1ey
19▼	CTZC19E∅	3	19	5 0 §	65m	3 0 ∅	7 5	175A	A1ey
20▼	TZC19,A,B,D	xxxx	19	5 0 §	65m	3.0 ∅	7.5	175A	A1ey
21▼	TZC19C	1	19	5 0 §	65m	3.0 ∅	7 5	175A	A1ey
22▼	TZC19E	3	19	5 0 §	65m	3 0 ∅	7 5	175A	A1ey
23	ZC19	†	19	5 0 §	65m	3.0		150A	A1ey
24	1N2048	5	19	10	500m	3.0	8 0	150J	D04
25	1N2048-2	5	19	10	500m	3 0	8.0	150J	D04
26	1N2983,A,B	xxx	19	10	130m	4 0	7 5	175S	D04
27#	1S276	10	19	10	170m	4 0		150J	S19g
28	AV8019	∅2	19	10	500m	4.0		150A	S11
29#	RD19D	10	19	10	200m	3 0	7 5	150S	S103
30	1N2817,A,B	xxx	19	50	660m	2 2	7.5	175S	C5a
31	1N3318	20	19	50	660m	2 2	7 5	175J	D05
32	1N3318A	10	19	50	660m	2 2	7 5	175J	D05
33	1N3318B	5	19	50	660m	2.2	7 5	175J	D05
34	AV51019	5	19	50	660m	2 2	7.5	150C	C5a
35	1N4916	5	19 2	40	50m	600	1 0	175	DO7
36	1N4916A	5	19.2	40	50m	600	1.0	175	DO7
37	1N4917	5	19 2	40	50m	600	50	175	DO7
38	1N4917A	5	19 2	40	50m	600	50	175	DO7
39	1N4918	5	19.2	40	50m	600	20	175	DO7
40	1N4918A	5	19 2	40	50m	600	20	175	DO7
41	1N4919	5	19 2	40	1 0m	300	1 0	175	DO7
42	1N4919A	5	19 2	40	1 0m	300	1.0	175	DO7
43	1N4920	5	19 2	40	1 0m	300	50	175	DO7
44	1N4920A	5	19 2	40	1.0m	300	50	175	DO7
45	1N4921	5	19 2	40	1 0m	300	20	175	DO7
46	1N4921A	5	19 2	40	1.0m	300	20	175	DO7
47	1N4922	5	19 2	40	2 0m	150	1 0	175	DO7
48	1N4922A	5	19 2	.40	2 0m	150	1 0	175	DO7
49	1N4923	5	19 2	40	2 0m	150	50	175	DO7
50	1N4923A	5	19 2	40	2 0m	150	50	175	DO7
51	1N4924	5	19 2	40	2 0m	150	20	175	DO7
52	1N4924A	5	19.2	40	2 0m	150	20	175	DO7
53	1N4925	5	19 2	40	4 0m	75	1 0	175	DO7
54	1N4925A	5	19 2	40	4 0m	75	1.0	175	DO7
55	1N4926	5	19 2	40	4 0m	75	50	175	DO7
56	1N4926A	5	19 2	40	4 0m	75	50	175	DO7
57	1N4927	5	19 2	40	4.0m	75	20	175	DO7
58	1N4927A	5	19.2	40	4 0m	75	.20	175	DO7
59	1N4928	5	19 2	40	4 0m	75	10	175	DO7
60	1N4928A	5	19 2	.40	4 0m	75	10	175	DO7
61	1N4929	5	19.2	40	7 5m	36	1 0	175	DO7
62	1N4929A	5	19.2	40	7 5m	36	1.0	175	DO7
63	1N4930	5	19 2	40	7 5m	36	.50	175	DO7
64	1N4930A	5	19 2	40	7 5m	36	50	175	DO7
65	1N4931	5	19 2	40	7 5m	36	20	175	DO7
66	1N4931A	5	19 2	40	7 5m	36	.20	175	DO7
67	1N4932	5	19 2	40	7 5m	36	10	175	DO7
68	1N4932A	5	19.2	40	7 5m	36	.10	175	DO7
69▼#	BZ192	5	19 2	1 0	20m	20	7 8	175J	A60t
70	1N2048C	5	20		500m	3.0		150A	S19a
71	DSZ3020	10	20		40m	9 0	8 0		A266
72	1/4A20,A,B	xxx	20	25	3 1m	33	8 0	175	DO7
73	1/4M20Z,10,5	xxx	20	25	3 1m	33	8 0	175J	A1cy
74	25N20	20	20	25	3 1m	33		250	DO7
75	1N721,A	xx	20	25	4 0m	20	8 1	175A	DO7
76	1N721B	20	20	25	4 0m	20			DO7
77	1N768-3	5	20	25	5 0m	100	8 0	150	DO7
78	1N4114	5	20	25	25m	150		200J	DO7
79	1N4707	5	20	25	05m			200A	DO14
80#	1120	10∅	20	25	5.0m	120	8.0	150J	C18f
81#	BZY83C20	5	20	25	5.0m	150	10 △	150J	C1g
82#	BZY85C20	5	20	25 §	5 0m	55	10 △	150J	A171f
83#	HS2200	5	20	25	5.0m			175A	DO7
84#	MR200C-H	5	20	.25	5 0m	120		250	DO7
85#	MZ1020	6	20	250m	50m	55	8 8	175J	DO7
86	SV144	5	20	25	5 0m	200	8 1	150	DO7
87#	SZ20	3	20	25	5 0m	165	81	150J	C1f
88	MC6021,A	xx	20	30	5 0m	47		175	A2m
89#	Z1D20	∅∅§§	20	.3 §		75		150J	C29
90#	Z1A20	1	20	320m	5 0m	65	9 0 △	150A	C29
91#	Z1B20	5	20	320m	5 0m	65	9 0 △	150A	C29
92#	Z1C20	10	20	320m	5 0m	65	9 0 △	150A	C29
93	1N968,A,B	xxx	20	40	6 2m	25	7 5	175S	DO7
94	JAN1N968B	5	20	.40	6.2m	25	8 6	175A	DO7
95	1N3525	5	20	.40	5 0m	20	9.8	200A	DO7
96	JAN1N4114	5	20	400m	250u	150	9 0	175A	A1sx
97	1N5540	20	20	400m§	1.0m			175A	DO7
98	1N5540A	10	20	400m§	1.0m			175A	DO7
99	1N5540B	5	20	400m§	1 0m	100		175A	DO7
100▼	JAN1N5540B	5	20	400m	1 0m	100	8 6	200A	DO14
101	1N5540C	2	20	400m§	1 0m	100		175A	DO7
102	1N5540D	1	20	400m§	1 0m	100		175A	DO7
103▼	1N5743B	5	20	400m	5 0m	55	8 0	200J	DO35
104#	1S2200	10	20	400m	5.0m	60	8 0	150A	A1
105#	1S2200A	5	20	400m	5 0m	60	8.0	150A	A1
106#	5527	5	20	40	5.0m	55	7.5	125A	A1ce
107#	BZX46C20	5	20	400m	6 2	25	7 5	175J	DO35
108#	BZX55C20	5	20	400m	5 0m	55	7 5	150J	DO35
109▼#	BZX71B20	2	20	400m§	5.0m	50		175J	DO35
110#	BZX71C20	5	20	400m§	5 0m	50		200S	A9m
111#	BZX79C20	5	20	400m	5 0m	55	170	200J	A257
112#	BZX83C20	5	20	400m	5.0m	55	7 5	150J	DO35
113▼#	BZY85B20	2	20	400m	5 0m	50	7 3	150J	DO7
114#	BZY88C20	5	20	40	5 0m	60		175J	DO7
115#	BZY94C20	5	20	40				150J	DO7
116	C4023	10	20	40	6 2m	25		175	A134a
117	C6023	10	20	400m	1 0m	50 ∅	7.7	175A	M371c
118	C6023A	5	20	400m	1 0m	50 ∅	7.7	175A	M371c
119	C6123	10	20	400m	1.0m	50	7.7	175A	M131a
120	C6123A	5	20	400m	1 0m	50	7.7	175A	M131a
121	CZA20D,10,5	xxx	20	40 ∅	250u	200	7 5	175J	M371
122	CZB20D,10,5	xxx	20	400m∅	3.1m	33	7 5	175J	M371
123	CZC20D,10,5	xxx	20	40 ∅	6 2m	25	7 5	175J	M371
124	CZD020,-5	xx	20	40	6 0m	12		175	DO7
125	CZD20D,10,5	xxx	20	.40 ∅	250u	200	7.5	175J	M451
126	CZE20D,10,5	xxx	20	40 ∅	6 2m	25	7 5	175J	M451
127	HM20,A,B	xxx	20	400m§	6.2m	25		175A	A196c
128#	HS7200	5	20	.40	5 0m			175A	DO7
129#	LR200CH	5	20	40	5.0m	95	7.0	150S	DO7
130	M4Z20,A,-20	xx*	20	40	6.2m	25		150A	A1kk
131#	M20Z	5 0	20	400m	5 0m	55	8 0	150A	DO7
132	MACZA20D,10,5	xxx	20	40 ∅	250u	200	7.5	175J	M453
133	MACZB20D,10,5	xxx	20	40 ∅	3 1	33	7 5	175J	M453
134	MACZC20D,10,5	xxx	20	40 ∅	6 2m	25	7.5	175J	M453
135	MACZD20D,10,5	xxx	20	40 ∅	250u	200	7 5	175J	M453
136	MACZE20D,10,5	xxx	20	40 ∅	6 2m	25	7.5	175J	M453
137	MBCZA20D,10,5	xxx	20	40 ∅	250u	200	7 5	175J	M454
138	MBCZB20D,10,5	xxx	20	40 ∅	3.1m	33	7 5	175J	M454
139	MBCZC20D,10,5	xxx	20	400m∅	6 2m	25	7 5	175J	M454
140	MBCZD20D,10,5	xxx	20	40 ∅	250u	200	7 5	175J	M454
141	MBCZE20D,10,5	xxx	20	40 ∅	6 2m	25	7 5	175J	M454
142	MCCZA20D,10,5	xxx	20	.40 ∅	250u	200	7 5	175J	M455
143	MCCZB20D,10,5	xxx	20	40 ∅	3 1m	33	7 5	175J	M455
144	MCCZC20D,10,5	xxx	20	40 ∅	6 2m	25	7.5	175J	M455
145	MCCZD20D,10,5	xxx	20	40 ∅	250u	200	7 5	175J	M455
146	MCCZE20D,10,5	xxx	20	.40 ∅	6 2m	25	7 5	175J	M455
147	MDCZA20D,10,5	xxx	20	.40 ∅	250u	200	7.5	150A	M410
148	MDCZB20D,10,5	xxx	20	40 ∅	3 1m	33	7 5	150A	M410
149	MDCZC20D,10,5	xxx	20	40 ∅	6.2m	25	7.5	150A	M410
150	MDCZD20D,10,5	xxx	20	40 ∅	250u	200	7 5	150A	M410
151	MDCZE20D,10,5	xxx	20	.40 ∅	6.2m	25	7 5	150A	M410
152	MZ500-23	10	20	.4 §	6.2m	30 ∅	8 6	175J	DO7
153	MZC20A10	†	20	400m§	2.5m	65	8 6	175J	M468
154	MZC20B10	§†	20	400m§	250u	150		175J	M468
155	WZ544	5	20	40	5.0m	30		150A	A31e
156#	Z5A20	1	20	400m§	5.0m	65	9.0 △	200J	A1hs
157#	Z5B20	5	20	400m§	5 0m	65	9.0 △	200J	A1hs
158#	Z5C20	10	20	400m§	5.0m	65	9.0 △	200J	A1hs
159#	Z5D20	15	20	400m§	5.0m	65	9 0 △	200J	A1hs
160#	ZF20	5	20	400m	5 0m	55	9.0	150J	DO7
161#	ZP20#	5	20	400m	5 0m	55	9 0	150J	DO7
162	1/2Z20T5	5	20	.50	6 2m	20		175	A94f
163	1N5250	20†	20	.50	6.2m			200A	DO7
164	1N5250A,B	§∅	20	.50	6.2m	25	8 6	200A	DO7
165▼	HEPZ0230-RT	10	20	500m	6.2	57			C103
166	MTZ621,A	xx	20	.50	5 0m	47		175A	A60e
167	MZ92-20	†	20	500m§	6.2m		8 0	150J	C103
168	S5250,A,B	xxx	20	500m	6.2m	25	8.6	175	DO41
169#	Z0D20	15	20	50	22m	40	9.0	150J	A1ef
170#	ZSF20	1	20	500m	7.0m	10	1.0	150S	M487a
171#	Z0A20	1	20	520m	5 0m	30	9.0 △	150J	A1ef
172#	Z0B20	5	20	520m	5.0m	30	9.0 △	150J	A1ef
173#	Z0C20	10	20	520m	5.0m	30	9.0 △	150J	A1ef
174	1N4639	5	20	.60	6 2m	750	8.6	200A	DO14
175#	NT0.6C20	5	20	600m	5 0m	55		125J	M498
176#	UZ20	10	20	.60	30m	27	8.5	135A	DO3
177#	ZC020	5	20	60	1.0m	70	7.3	100	A3k
178#	ZD020	10	20	60	1 0m	70	7 3	100	A3k
179#	ZW20	5	20	600m	5 0m	55	9.0	150J	A1bg
180	7JZ20	†	20	750m	6 2m	25	7.5	175	DO15
181	7Z20,A,B,D	xxxx	20	750m	6 2m	25	7 5	175	DO27
182	7Z20C	∅	20	750m	6 2m	25	7.5	175	DO27
183	.7ZM20,A,B,D	xxxx	20	750m	6 2m	25	7.5	175	DO41
184	7ZM20C	∅	20	750m	6.2m	25	7.5	175	DO41

SYMBOLS AND CODES EXPLAINED IN INTERPRETER

2. SILICON REFERENCE DIODES

IN ORDER OF (1) REF. VOLTAGE, (2) DISSIPATION, and (3) TYPE No.

LINE No.	TYPE No.	TOLERANCE 20 10 5 2 ± (%)	NOM REF. VOLT. (V)	MAX DISS. @ 25°C (W)	TEST CUR. Izt (A)	MAX. DYN. IMP. (Ω)	TEMP. COEFF Tc	MAX. TEMP (°C)	DWG. No.
1	1N2039-3	5	20	75	5 0m	200	8 0	150J	DO12
2	1N3686	20	20	750m	6.2m	25	7 5	175S	A1az
3	1N3686A	10	20	750m	6 2m	25	7 5	175S	A1az
4	1N3686B	5	20	750m	6 2m	25	7 5	175S	A1az
5	MC6121,A	xx	20	75	10m	47		175A	A2d
6	MMZ20,A,-20								
		xx*	20	75	6 2m	25		150A	A1kk
7	MZ20T20,10,5								
		xxx	20	75	8 0m	40	8 5	165A	A152
8	SV1025	5	20	.75	5 0m	200 Ø	8 1	150	A82f
9	WZ925	5	20	75	5.0m	200 Ø		150A	A1fw
10	1A20M,A,B	xxx	20	1.0	13m	22		75A	DO15
11	1E20Z,10,5	xxx	20	1 0	13m	22	7 5	150A	A52g
12	1M20Z,10,5	xxx	20	1 0	13m	22	7 5	175S	DO1
13	1N1778,A	xx	20	1 0	15m	13		175S	DO13
14	1N3027	20	20	1 0	12m	22		175A	A31a
15	1N3027A	10	20	1 0	12m	22		175A	A31a
16	1N3027B	5	20	1 0	12m	22		175A	A31a
17	JAN1N3027B	5	20	1 0	13m	22	8 6	175A	A31c
18	1N4169	20	20	1 0	13m	22	7 5	175	DO29
19	1N4169A	10	20	1 0	13m	22	7 5	175	DO29
20	1N4169B	5	20	1 0	13m	22	7 5	175	DO29
21	1N4334,A,B	xxx	20	1 0	13m	22	7 5	300S	DO7
22♦	1N4411	20	20	1.0	12m	11		175S	A266a
23	1N4411A	10	20	1 0	13m	11	7 5	175A	A1cm
24	1N4411B	5	20	1.0	13m	11	7.5	175A	A1cm
25	1N4668	5	20	1 0	13m	600	8 6	200A	DO15
26	1N4747	10	20	1 0	13m	22		200A	A1ay
27	1N4747A	5	20	1 0	13m	22		200A	A1ay
28	1N5570	20	20	1 0 §	12m			200A	A196d
29	1N5570A	10	20	1.0 §	12m	22		200A	A196d
30	1N5570B	5	20	1 0 §	12m	22		200A	A196d
31	1N5640		20	1 0	1 0m		9 0m	175A	DO13
32	1N5640A		20	1 0	1 0m		9 0m	175A	DO13
33	1R20,A,B	xxx	20	1 0	13m	22	7 5	175A	A52c
34#	1S235	10	20	1.0	17m	20		150J	A56a
35#	1S3020	xx	20	1 0	10m	30	8 5	150	A3
36	1Z20,A,B	xxx	20	1.0	12m	22		150	A1ay
37	1Z20T20,10,5								
		xxx	20	1 0	10m	43	8 5	165A	A89c
38#	1ZC20T10,5	xx	20	1 0	10m	50	8 5	165A	A31p
39	AV2020	Ø2	20	1 0	50m	20		150A	A19
40#	BZX29C20	5	20	1 0	10m	22	7 5	175J	A1cd
41#	BZX61C20	5	20	1 0	10m	22	6 0	175J	A3y
42♦	BZX85C20	5	20	1.0	10m	24	8 5	150A	DO15
43	CD31-00020	5	20	1 0	13m	22	8.2	200A	A1ce
44	CD31-12027	5	20	1 0	13m	22		200A	A1ce
45	CD32-12057	5	20	1 0	13m	22			
46	CZ20,A,B,D	xxxx	20	1.0	20m	26	7 5	175	DO15
47	CZ20C	∅	20	1 0	20m	26	7.5	175	DO15
48	EVR20,A,B	xxx	20	1 0	13m	30		175A	DO27
49	G20T20,10,5								
		xxx	20	1 0	12m	22		175	DO15
50	HW20,A,B	xxx	20	1 0	13m	22		175	A196
51	JZ20,A,B,D	xxxx	20	1 0	12m	22	7 5	175	DO15
52	JZ20C	∅	20	1 0	12m	22	7 5	175	DO15
53	LPM20,A,-20								
		xx*	20	1 0	12m	22		150A	A1kk
54	TZ20,A,B,D	xxxx	20	1 0	20m	26	7.5	175	DO27
55	TZ20C	∅	20	1 0	20m	26	7 5	175	DO27
56	UZ8720	5	20	1 0	12m	22	8 0	175	A146h
57	UZ8820	10	20	1 0	12m	22	8 0	175	A146h
58	VR20,A,B	xxx	20	1 0	12m	22		125A	A1b
59#	Z4A20	1	20	1 0	25m	18	9 0 △	150J	A1ef
60#	Z4B20	5	20	1 0	25m	18	9 0 △	150J	A1ef
61#	Z4C20	10	20	1 0	25m	18	9 0 △	150J	A1ef
62#	Z4D20	15	20	1 0	25m	18	9 0 △	150J	A1ef
63	Z4XL20,B	xx	20	1 0	20m	60	8 8	165A	DO13
64	Z20,A,B,D	xxxx	20	1 0	12m	22	7 5	175	DO27
65	Z20C	∅	20	1.0	12m	22	7 5	175	DO27
66	ZA20,A,B	xxx	20	1 0	13m	22		150C	A1ew
67	ZB20#	†	20	1 0 §	12m	22		150A	A1bc
68	ZD20∅,A,B	xxx	20	1 0	13m	20	7 5	175A	A1cm
69	ZH20,A,B	xxx	20	1 0	13m	22	7.5	175A	DO1
70	ZM20,A,B,D	xxxx	20	1 0	12m	22	7.5	175	DO41
71	ZM20C	∅	20	1 0	12m	22	7 5	175	DO41
72#	7727	5	20	1 1	20m	18	7 5	125A	A1bu
73#	BZY92C20	5	20	1 1	25m	15	7 0	150J	DO13
74	1N4839,A,B	xxx	20	1 2	13m	22	8.6	175	DO29
75#	BZX67C20	5	20	1 3	25m	15	7 0	150J	S287
76#	ZD20#	5	20	1 3	25	15	7 0	150J	DO13
77#	ZY20	5	20	1 3	25	15	7 0	150J	A1bg
78	1N3763	5	20	1 5	10m	35	.20	150A	A1ss
79▼	1N3796	20	20	1 5	19m	15	8.6	175S	C14∅
80▼	1N3796A	10	20	1 5	19m	15	8 6	175S	C14∅
81▼	1N3796B	5	20	1 5	19m	15	8 6	175S	C14∅
82	1N3950	5	20	1 5	19m	15	7 9	175S	C12
83	1N4472	5	20	1 5	13m	12		175A	A196
84	JAN1N4472	10	20	1 5	12m	12	8 6	175A	A1v
85#	1S4020,A	xx	20	1 5	10m	8 0	8 5	150A	DO1
86	1 5DKZ20,A,B								
		xxx	20	1 5	21m	13		175A	DO27
87	1 5JZ20,A,B,D								
		xxxx	20	1 5	19m	15	8 6	175	DO15
88	1 5JZ20C	∅	20	1 5	19m	15	8.6	175	DO15
89	1.5R20,A,B	xxx	20	1 5	19m	20	7 5	175A	A52c
90	1 5Z20,A,B,D								
		xxxx	20	1 5	19m	15	8.6	175	DO27
91	1.5Z20C	∅	20	1 5	19m	15	8.6	175	DO27
92#	BZY95C20	5	20	1 5	20m	12	14	175J	DO1
93	MC6321,A	xx	20	1 5	51m	42			A1q
94	MZ1000-20	10	20	1 5 §	13m	33 Ø	8 6	175J	A1ay
95#	SZ20C	5	20	1 5	20m	90	8 0	160A	A26
96#	Z2A20	1	20	1 5	25m	16	9.0 △	150J	A244
97#	Z2B20	5	20	1 5	25m	16	9.0 △	150J	A244
98#	Z2C20	10	20	1 5	25m	16	9.0 △	150J	A244
99#	Z2D20	∅§§	20	1 5		19		150J	A6b
100#	Z3A20	1	20	1 5	100m	13	9 0 △	150J	S4f
101#	Z3B20	5	20	1 5	100m	13	9 0 △	150J	S4f
102#	Z3B200CF	20§∅	20	1 5	20m	14	8 5	175J	DO1
103#	Z3C20	10	20	1.5	100m	13	9 0 △	150J	S4f
104#	Z3D20	∅∅§§	20	1.5	50m	15		150J	S4f
105#	ZC2020	5	20	1 8	1 0m	70	7.3	150	DO3
106#	ZD2020	10	20	1 8	1.0m	70	7 3	150	DO3
107	2R20,A,B	xxx	20	2.0	25m	20	7.5	175A	DO27
108	2VR20,A,B	xxx	20	2 0	25m	20			A3e
109	LMZ20,A,-20								
		xx*	20	2 0	25m	11		150A	A1kk
110	ZBC20	†	20	2.0 §	25m	9 0		150A	A1bc
111#	VR20F	5	20	2 2	20m	26		200S	DO3
112	1N5030	10	20	2 5	31m	9 0	7 5	150	A1gn
113	1N5030A	5	20	2.5	31m	9.0	7 5	150	A1gn
114#	BZX70C20	5	20	2 5	20m	12	140	150J	A171b
115	1N4881	10	20	3.0	40m	9 0		175A	A60n
116	1N4884	5	20	3 0	40m	9 0		175A	A60n
117	3R20,A,B	xxx	20	3 0	38m	11	7 5	175A	A1rw
118	3TZ20,A,B,D								
		xxxx	20	3 0	50m	10	8 5	175	A1ec
119	3TZ20C	∅	20	3 0	50m	10	8 5	175	A1ec
120	3VR20,A,B	xxx	20	3 0	37m	11			A222
121	CZ4881	10	20	3 0	40m	9 0	180	175A	A196e
122	M3Z20,A	xx	20	3.0	39m	9 1		150A	A1kk
123	MZ720	5	20	3 0	40m	9.0	8 0	175A	A146j
124	MZ820∅	10	20	3 0	40m	9.0	8.0	175A	A146j
125	MZ920	20	20	3.0	40m	9.0	8 0	175A	A146j
126#	NT3C20	5	20	3 0	5 0m	70		125J	S43a
127	UZ720	5	20	3.0	40m	9 0	8 0	175A	A146f
128	UZ820	10	20	3 0	40m	9 0	8 0	175A	A146f
129	UZ920	20	20	3.0	40m	9 0	8 0	175A	A60
130	ZAC20,A,B	xxx	20	3 0	13m	22		150C	A1ey
131	ZCC20	†	20	3 0 §	40m	9.0		150A	A1ey
132	3T20,A,B	xx*	20	3 5	50m	13			DO4
133	3Z20T20,10,5								
		xxx	20	3 5	35m	18	8.5	165	DO4
134	1N4025,A,B	xxx	20	5 0	65m	4 0	8 6	180A	S82
135	1N4965	5	20	5 0	65m	4 5		175A	A146m
136	JAN1N4965	5	20	5 0	65m	4 5	8 5	175A	A248f
137♦	1N5357	20	20	5 0	65m			200A	A1ee
138▼	1N5357A	10	20	5 0	65m	3.0		200A	A1ee
139▼	1N5357B	5	20	5 0	65m	3.0		200A	A1ee
140▼	5ZS20,A,B	xxx	20	5 0 §	65m	3 0		200A	A1ts
141#	5327	10∅	20	5.0	40m	12		150J	A9h
142▼	CTZC20,A,B,D∅								
		xxxx	20	5 0 §	65m	3.0 Ø	7 5	175A	A1ey
143▼	CTZC20C∅	1	20	5 0 §	65m	3 0 Ø	7 5	175A	A1ey
144▼	CTZC20E∅	3	20	5.0 §	65m	3 0 Ø	7 5	175A	A1ey
145	DSZ5720	5	20	5 0	65m	4 5	8 5	175A	A60r
146	DSZ5820	10	20	5 0	65m	4 5	8.5	175A	A60r
147	MZ5720	5	20	5 0	65m	4.5	8 0	175A	A60f
148	MZ5820	10	20	5 0	65m	4 5	8 0	175A	A60f
149	MZ5920	20	20	5 0	65m	4 5	8 0	175A	A60f
150▼	TZC20,A,B,D								
		xxxx	20	5 0 §	65m	3 0 Ø	7 5	175A	A1ey
151▼	TZC20C	1	20	5 0 §	65m	3.0 Ø	7 5	175A	A1ey
152▼	TZC20E	3	20	5 0 §	65m	3 0 Ø	7 5	175A	A1ey
153▼	UZ5720	5	20	5 0	65m	4.5	8 5	175A	A146m
154♦	UZ5820	10	20	5 0	65m	4 5	8 5	175A	A146m
155	UZ5920	20	20	5.0	65m	4 5 Ø	8 0	175A	A146m
156	ZC20	†	20	5 0 §	65m	3 0		150A	A1ey
157#	VR20E	5	20	5 8	20m	26		200S	DO4
158	UZ4720	5	20	8 0	65m	4 5		175A	A146m
159	UZ4820	10	20	8 0	65m	4 5		175A	A146m
160	1N1358,A	xx	20	10	150m	3.0		175A	DO4
161	1N1358B	20	20	10	150m	3 0			S11e
162	1N1358C,CA∅								
		xx	20	10 §	.15	3 0		175J	S19a
163	1N1820	10	20	10	250m	3 0	8 0	150A	S19a
164	1N1820A	5	20	10	250m	3 0	8 0	150A	S19a
165	1N1820C,CA∅								
		xx	20	10	250m	3 0	8 0	150A	S19a
166	1N2048-3	5	20	10	500m	3 0	8 0	150J	DO4
167	1N2984,A,B	xxx	20	10	125m	4 0		175C	DO4∅
168	JAN1N2984B,RB								
		5	20	10	125m	4 0	8 6	150C	DO4
169	1N3949	5	20	10	250m	3.0	8 0	175S	DO4
170	1N4269	20	20	10	125m	4 0	7 5	175C	S134
171	1N4269A	10	20	10	125m	4 0	7 5	175C	S134
172	1N4269B	5	20	10	125m	4.0	7.5	175C	S134
173	JAN1N4269B	5	20	10 §	125m	4 0	8 6	175S	S134a
174#	1S277	10	20	10	170m	4.0		150J	S19g
175#	1S5020,A	xx	20	10	50m	5 0	8 0	150C	DO4
176#	1S5020C∅	10	20	10	50m	5.0	8.0	150C	DO4
177#	1S6020	10	20	10	100m	5 0	6 0	150	DO4
178#	1S6020A	5	20	10	100m	5 0	6 0	150	DO4
179	10PZ20,A,B,D								
		xxxx	20	10	125m	4 0	7 5	175	DO4
180	10PZ20C	∅	20	10	125m	4 0	7.5	175	DO4
181	10RZ20,A,B,D								
		xxxx	20	10	150m	3 0	8 0	155	DO4
182	10RZ20C	∅	20	10	150m	3.0	8 0	155	DO4
183	10Z20T20,10,5								
		xxx	20	10	110m	7 5	8 5	165	DO4
184	AV8020	Ø2	20	10	500m	4 0		150A	S11
185#	CC4020	5	20	10	15m	15	6 6	150	S19
186#	CD4020	10	20	10	15m	15	6 6	150	S19
187#	OAZ235	5	20	10	20m	58		150J	DO4
188	UZ7720	5	20	10	120m	4 0	8 0	175	S277∅
189	UZ7820	10	20	10	120m	4 0	8 0	175	S277∅
190	UZ7920	20	20	10	120m	4 0	8 0	175	S277∅
191#	Z5D200CF	20§∅	20	10	50m	5 0	8.0	150J	DO4
192#	ZC5020	5	20	10	100m	5 0	7.3	150A	S19
193#	ZD5020	10	20	10	100m	5 0	7.3	150A	S19
194#	BZZ27	5	20	13	20m	19	19	150	DO4
195#	4127	10∅	20	15	200m	1 5		150J	S87
196#	4227	10∅	20	15	200m	1 5		150J	S87
197#	BZY93C20	5	20	20 §	500m	1 5	14	175J	DO4∅
198#	ZX20	5	20	25 ∅	25	15	7 0	150J	M41
199#	4327	10∅	20	30	200m	1 5		150J	S87
200#	4427	10∅	20	30	200m	1 5		150J	S87
201	1N2818,A,B	xxx	20	50	630m	2 4	7.5	175S	C5a

SYMBOLS AND CODES EXPLAINED IN INTERPRETER

2. SILICON REFERENCE DIODES

IN ORDER OF (1) REF. VOLTAGE, (2) DISSIPATION, and (3) TYPE No.

LINE No	TYPE No.	TOLERANCE 3 (20 10 5 2) ± (%)	NOM. REF. VOLT. (V)	2 MAX. DISS. @ 25°C (W)	TEST CUR. Izt (A)	MAX. DYN IMP. (Ω)	TEMP. COEFF Tc	MAX. TEMP (°C)	DWG. No.
1	JAN1N2818B,RB	5	20	50	630m	2 4	8.6	150C	C5a
2	1N3319	20	20	50	630m	2 4	7 5	175J	DO5
3	1N3319A	10	20	50	630m	2 4	7 5	175J	DO5
4	1N3319B	5	20	50	630m	2 4	7.5	175J	DO5
5	JAN1N3319B,RB	5	20	50	630m	2 4	8 6	150	DO5
6	50T20,A,B	xx*	20	50	63	2 4	7 5		S19e
7	AV51020	5	20	50	630m	2.4	7 5	150C	C5a
8#	BZY91C20	5	20	75 §	1	80	7 5	175J	DO5∅
9#	4527	10∅	20	100	230m	1 2		150J	S84
10#	4627	10∅	20	100	230m	1 2		150J	S84
11#	ZC720	5	20	100 §	50	4.0	7 6	175J	S125d∅
12	250ZE20	10	20	250 §	7		8 0	190A	S83
13	250ZF20	10	20	250 §	7		8.0	190A	M56a
14	LID20,A	xx	20	400	6 2m	27		150A	M401
15	1N2767	5	20.4		7 5m	60	50	175A	A1jg
16	1N2767A	5	20 4		7 5m	60	25	175A	A1jg
17	AV2021	∅2	21	1 0	50m	20		150A	A19
18▼#	BZ210	5	21	1 0	10m	22	8 1	175J	A60t
19	EVR21,A,B	xxx	21	1.0	13m	32		175A	DO27
20	TC21A5A	5Δ∅	21	1.0	10m	35	05	175A	A1ss
21	1N4061	5	21	1 5	10m	35	50	100	A1ss
22	1N4061A	5	21	1 5	10m	35	.20	100	A1ss
23	3Z21,A,B	xxx	21	3 0	35m	12		150	A222
24	AV8021	∅2	21	10	500m	4.0		150A	S11
25	AV51021	5	21	50	600m	2.4	7 5	150C	C5a
26	WZ926	5	21 5	75	5 0m	300 ∅		150A	A1fw
27	1N2049A	5	22		150m	8 0		150A	S19a
28	DSZ3022	10	22		30m	10	8.0		A266
29#	RZ22	5	22	08	2 0m	320		150A	C18e
30#	RZZ22	10	22	.08	5 0m	340		150A	C18e
31	1N1990	10	22	150m	1 0m	100	9 4	150	C1
32	1N1990A	5	22	150m	1.0m	100	9 4	150	C1
33	1N1990B	1	22	150m	1 0m	100	9 4	150	C1
34#	AZ22	10	22	.15	5 0m	100		170A	DO7
35#	Z22∅	5	22	150m	2 0m	320		150A	C18d
36#	ZZ22∅	10	22	.15	5 0m	340		150A	C18d
37	1N1936,A,B	xx1	22	.20	1 0m	100	9 4	150A	A82e
38#	RZ22A	10	22	.20	180m	4 3	7 3	125A	DO5
39	1/4A22,A,B	xxx	22	25	2.8m	40	8.5	175	DO7
40	1/4M22Z,10,5	xxx	22	25	2 8m	40	8 2	175J	A1cy
41	25N22	20	22	.25	2 8m	40		250	DO7
42	1N722,A	xx	22	.25	4 0m	24	8 3	175A	DO7
43	1N722B	20	22	.25	4 0m	24			DO7
44	1N769-1	5	22	25	5.0m	150	9 0	150	DO7
45	1N4115	5	22	.25	25m	150		200J	DO7
46	1N4708	5	22	.25	05m			200A	DO14
47#	1122	10∅	22	.25	5 0m	120	8.0	150J	C18f
48#	BZY83C22	5	22	.25	5 0m	170	10 Δ	150J	C1g
49#	BZY83D22	10	22	25	5 0m	200	10 Δ	150J	C1g
50#	BZY85C22	5	22	.25 §	5 0m	55	10 Δ	150J	A171f
51#	HS2220	5	22	.25	5 0m			175A	DO7
52#	MZ22A	10	22	25	4 7m	47	7.3	150A	DO7
53#	MZ1022	5	22	25	5 0m	65	9.0	175J	DO7
54	SV168	5	22	25	5 0m	300 ∅	8 4	150	DO7
55	MC6022,A	xx	22	.30	5 0m	53		175	A2m
56#	Z1A22	1	22	320m	5.0m	70	9.0 Δ	150A	C29
57#	Z1B22	5	22	320m	5.0m	70	9 0 Δ	150A	C29
58#	Z1C22	10	22	320m	5.0m	70	9.0 Δ	150A	C29
59#	Z1D22	15	22	320m	5.0m	70	9.0 Δ	150A	C29
60	1N668	5	22	.40	5.0m	30	8 0	200S	A31b
61	1N969,A,B	xxx	22	.40	5.6m	29	8 0	175S	DO7
62	JAN1N969B	5	22	40	5 6m	29	8 7	175A	DO7
63	1N1963,A,B	xx1	22	.40	1 0m	100	9 4	150	DO7
64	1N3526	5	22	40	5 0m	35	10	200A	DO7
65	JAN1N4115	5	22	400m	250u	150	9 0	175A	A1sx
66	1N5541	20	22	400m§	1.0m			175A	DO7
67	1N5541A	10	22	400m§	1 0m			175A	DO7
68	1N5541B	5	22	400m§	1.0m	100		175A	DO7
69▼	JAN1N5541B	5	22	400m	1.0m	100	8 7	200A	DO14
70	1N5541C	2	22	400m§	1 0m	100		175A	DO7
71	1N5541D	1	22	400m§	1.0m	100		175A	DO7
72▼	1N5744B	5	22	400m	5 0m	55	8.6	200J	DO35
73#	1S2220	10	22	400m	5 0m	65	8 0	150A	A1
74#	1S2220A	5	22	400m	5 0m	65	8.0	150A	A1
75#	5528	5	22	.40	5 0m	55	7 5	125A	A1ce
76#	BZX46C22	5	22	400m	5.6	29	8 0	175J	DO35
77#	BZX55C22	5	22	400m	5 0m	55	8 0	150J	DO35
78▼#	BZX71B22	2	22	400m§	5 0m	55		175J	DO35
79#	BZX71C22	5	22	400m§	5 0m	55		200S	A9m
80#	BZX79C22	5	22	400m	5 0m	55	190	200J	A257
81#	BZX83C22	5	22	400m	5 0m	58	8 0	150J	DO35
82▼#	BZY85B22	2	22	400m	5 0m	55	7 4	150J	DO7
83#	BZY85D22	10	22	400m	5 0m	60	7 4	150J	A1su
84#	BZY88C22	5	22	40	5.0m	65		175J	DO7
85#	BZY94C22	5	22	40				150J	DO7
86	C4024	10	22	40	5 6m	29		175	A134a
87	C6024	10	22	400m	1 0m	60 ∅	8.0	175A	M371c
88	C6024A	5	22	400m	1 0m	60 ∅	8 0	175A	M371c
89	C6124	10	22	400m	1 0m	60	8 0	175A	M131a
90	C6124A	5	22	400m	1 0m	60	8.0	175A	M131a
91	CZA22D,10,5	xxx	22	40 ∅	250u	200	8 0	175J	M371
92	CZB22D,10,5	xxx	22	40 ∅	2.8m	40	8.0	175J	M371
93	CZC22D,10,5	xxx	22	.40 ∅	5 6m	29	8.0	175J	M371
94	CZD022,-5	xx	22	40	6 0m	12		175	DO7
95	CZD22D,10,5	xxx	22	40 ∅	250u	200	8 0	175J	M451
96	CZE22D,10,5	xxx	22	40 ∅	5 6m	29	8.0	175J	M451
97	HM22,A,B	xxx	22	400m§	5.6m	29		175A	A196c
98#	HS7220	5	22	40	5 0m			175A	DO7
99	M4Z22,A,-20	xx*	22	40	5.6m	29		150A	A1kk
100#	M22Z	5 0	22	400m	5 0m	55	8 0	150A	DO7
101	MACZA22D,10,5	xxx	22	.40 ∅	250u	200	8.0	175J	M453
102	MACZB22D,10,5	xxx	22	40 ∅	2.8m	40	8.0	175J	M453
103	MACZC22D,10,5	xxx	22	40 ∅	5 6m	29	8.0	175J	M453
104	MACZD22D,10,5	xxx	22	40 ∅	250u	200	8 0	175J	M453
105	MACZE22D,10,5	xxx	22	40 ∅	5.6m	29	8 0	175J	M453
106	MBCZA22D,10,5	xxx	22	40 ∅	5.6m	29	8 0	175J	M454
107	MBCZB22D,10,5	xxx	22	40 ∅	2 8m	40	8.0	175J	M454
108	MBCZC22D,10,5	xxx	22	400m∅	5 6m	29	8 0	175J	M454
109	MBCZD22D,10,5	xxx	22	40 ∅	250u	200	8.0	175J	M454
110	MBCZE22D,10,5	xxx	22	.40 ∅	5 6m	29	8.0	175J	M454
111	MCCZA22D,10,5	xxx	22	.40 ∅	250u	200	8.0	175J	M455
112	MCCZB22D,10,5	xxx	22	.40 ∅	2.8m	40	8 0	175J	M455
113	MCCZC22D,10,5	xxx	22	40 ∅	5 6m	29	8.0	175J	M455
114	MCCZD22D,10,5	xxx	22	40 ∅	250u	200	8 0	175J	M455
115	MCCZE22D,10,5	xxx	22	.40 ∅	5 6m	29	8 0	175J	M455
116	MDCZA22D,10,5	xxx	22	40 ∅	250u	200	8 0	150A	M410
117	MDCZB22D,10,5	xxx	22	40 ∅	2 8m	40	8 0	150A	M410
118	MDCZC22D,10,5	xxx	22	40 ∅	5 6m	29	8 0	150A	M410
119	MDCZD22D,10,5	xxx	22	40 ∅	250u	200	8 0	150A	M410
120	MDCZE22D,10,5	xxx	22	40 ∅	5 6m	29	8 0	150A	M410
121	MZ500-24	10	22	.4 §	5 6m	30 ∅	8.7	175J	DO7
122	MZC22A10	†	22	400m§	2.3m	70	8 7	175J	M468
123	MZC22B10	§†	22	400m§	250u	150		175J	M468
124#	Z5A22	1	22	400m§	5 0m	70	9 0 Δ	200J	A1hs
125#	Z5B22	5	22	400m§	5.0m	70	9.0 Δ	200J	A1hs
126#	Z5C22	10	22	400m§	5 0m	70	9.0 Δ	200J	A1hs
127#	Z5D22	15	22	400m§	5 0m	70	9 0 Δ	200J	A1hs
128#	ZF22	5	22	400m	5.0m	55	9 0	150J	DO7
129#	ZG22	10	22	400m	5.0m	55	9.0	150J	DO7
130#	ZP22#	5	22	400m	5 0m	55	9.0	150J	DO7
131	1/2Z22T5	5	22	50	5 6m	23		175	A94f
132	1N3406∅	10	22	50	3 0m	50	5.6	200A	P5
133	1N3419	10	22	.50	1.0m	220	7 1	200A	P5
134	1N5251	20†	22	50	5.6m			200A	DO7
135	1N5251A,B	§∅	22	.50	5 6m	29	8 7	200A	DO7
136#	DZ22A	10	22	.50	9.1m	43	7.3	150A	A100
137▼	HEPZ0231-RT	10	22	500m	5.6	68			C103
138	IDAZ3406,A,B,C∅	xxxx	22	500m	3.0m	50	5.6	200A	A1hc
139	MTZ622,A	xx	22	.50	5.0m	53		175A	A60e
140	MZ92-22	†	22	500m§	5.6m		8 2	150J	C103
141	S5251,A,B	xxx	22	500m	5 6m	29	8.7	175	DO41
142#	ZSF22	1	22	500m	7.0m	10	1 0	150S	M487a
143#	Z0A22	1	22	520m	5 0m	35	9.0 Δ	150J	A1ef
144#	Z0B22	5	22	520m	5.0m	35	9.0 Δ	150J	A1ef
145#	Z0C22	10	22	520m	5 0m	35	9.0 Δ	150J	A1ef
146#	Z0D22	15	22	520m	5 0m	35	9 0 Δ	150J	A1ef
147	1N4640	5	22	.60	5 6m	750	8.7	200A	DO14
148#	NT0.6C22	5	22	600m	5.0m	55		125J	M498
149#	UZ22	10	22	60	27m	33	9.0	135A	DO3
150#	ZC022	5	22	.60	1.0m	75	7.5	100	A3k
151#	ZD022	10	22	.60	1.0m	75	7.5	100	A3k
152#	ZW22	5	22	600m	5 0m	55	9.0	150J	A1bg
153	ZZ22Δ	10	22	.60	5 0m	26	9 0	175A	M222
154	7JZ22	†	22	750m	5 6m	29	8.0	175	DO15
155	7Z22,A,B,D	xxxx	22	750m	5 6m	29	8.0	175	DO27
156	.7Z22C	∅	22	750m	5 6m	29	8.0	175	DO27
157	7ZM22,A,B,D	xxxx	22	750m	5 6m	29	8.0	175	DO41
158	7ZM22C	∅	22	750m	5 6m	29	8 0	175	DO41
159	1N1516,A	xx	22	75	6.0m	40	9.0	200S	DO12
160	1N2040A	5	22	75	5.0m	300	9.0	150J	DO12
161	1N3687	20	22	750m	5.6m	29	8.0	175S	A1az
162	1N3687A	10	22	750m	5 6m	29	8.0	175S	A1az
163	1N3687B	5	22	750m	5.6m	29	8 0	175S	A1az
164	MC6122,A	xx	22	75	10m	53		175A	A2d
165	MMZ22,A,-20	xx*	22	.75	5.6m	29		150A	A1kk
166	MZ22T20,10,5	xxx	22	75	6.0m	60	9 0	165A	A152
167	SV1033	5	22	.75	5 0m	300	8 4	150	A82f
168	1A22M,A,B	xxx	22	1 0	12m	23		75A	DO15
169	1E22Z,10,5	xxx	22	1 0	12m	23	8 0	150A	A52g
170	1M22Z,10,5	xxx	22	1 0	12m	23	8 0	175S	DO1
171	1N1429	5	22	1 0	10m	23 ∅	8 0	200A	A154
172	1N1527,A	xx	22	1 0	9 0m	32	9 0	200S	DO3
173	1N1779,A	xx	22	1 0	15m	16		175S	DO13
174	1N1880	10	22	1 0	8.0m	24	6 4	200C	A126
175	1N1880A	5	22	1 0	8 0m	24	6 4	200C	A126
176	1N1880B	1	22	1.0	8 0m	10 Δ	6 4	175A	DO13
177	1N3028	20	22	1.0	11m	23		175A	A31a
178	1N3028A	10	22	1 0	11m	23		175A	A31a
179	1N3028B	5	22	1 0	11m	23		175A	A31a
180	JAN1N3028B	5	22	1.0	12m	23	8 7	175A	A31c
181	1N4170	20	22	1.0	12m	23	8 0	175	DO29
182	1N4170A	10	22	1.0	12m	23	8 0	175	DO29
183	1N4170B	5	22	1 0	12m	23	8 0	175	DO29
184	1N4335,A,B	xxx	22	1.0	12m	23	8.0	300S	DO7

SYMBOLS AND CODES EXPLAINED IN INTERPRETER

2. SILICON REFERENCE DIODES

IN ORDER OF (1) REF. VOLTAGE, (2) DISSIPATION, and (3) TYPE No.

LINE No.	3 TYPE No	TOLERANCE 1 20 10 5 2 ± (%)	NOM. REF. VOLT. (V)	2 MAX. DISS. @ 25°C (W)	TEST CUR. Izt (A)	MAX. DYN. IMP. (Ω)	TEMP. COEFF Tc	MAX. TEMP (°C)	DWG. No.
1♦	1N4412	20	22	1 0	11m	12		175S	A266a
2	1N4412A	10	22	1 0	12m	12	8.0	175A	A1cm
3	1N4412B	5	22	1 0	12m	12	8 0	175A	A1cm
4	1N4669	5	22	1.0	12m	600	8.7	200A	DO15
5	1N4748	10	22	1 0	12m	23		200A	A1ay
6	1N4748A	5	22	1 0	12m	23		200A	A1ay
7	1N5571	20	22	1 0 §	11m			200A	A196d
8	1N5571A	10	22	1 0 §	11m	23		200A	A196d
9	1N5571B	5	22	1 0 §	11m	23		200A	A196d
10	1N5641		22	1 0	1.0m		9.2m	175A	DO13
11	1N5641A		22	1 0	1 0m		9 2m	175A	DO13
12	1R22,A,B	xxx	22	1 0	12m	23	8 0	175A	A52c
13#	1S236	10	22	1 0	72m	30		150J	A56a
14#	1S3022	xx	22	1 0	10m	30	8 5	150	A3
15	1Z22,A,B	xxx	22	1 0	11m	23		150	A1ay
16	1Z22T20,10,5	xxx	22	1 0	9 0m	48	9 0	165A	A89c
17#	1ZC22T10,5	xx	22	1.0	9 0m	60	9 0	165A	A31p
18	AV2022	Ø2	22	1 0	15m	20		150A	A19
19#	BZX29C22	5	22	1 0	10m	23	8 0	175J	A1cd
20#	BZX61C22	5	22	1 0	10m	23	6.0	175J	A3y
21♦	BZX85C22	5	22	1 0	10m	25	8 7	150A	DO15
22	CD31-00021	5	22	1 0	12m	23	8 4	200A	A1ce
23	CD31-12028	5	22	1 0	12m	23		200A	A1ce
24	CD32-12058	5	22	1 0	12m	23			
25	CZ22,A,B,D	xxxx	22	1.0	20m	27	8 0	175	DO15
26	CZ22C	∅	22	1 0	20m	27	8 0	175	DO15
27	EVR22,A,B	xxx	22	1 0	12m	32		175A	DO27
28#	EZ22A	10	22	1 0	18m	750	7 3		A1em
29	G22T20,10,5	xxx	22	1 0	11m	23		175	DO15
30#	GZ22	10	22	1 0	25m	45 △		150A	S115
31	HW22,A,B	xxx	22	1 0	12m	23		175	A196
32	IDA1Z22,A,B,C∅	xxxx	22	1 0	25m			200A	A1ht
33	JZ22,A,B,D	xxxx	22	1.0	11m	23	8 0	175	DO15
34	JZ22C	∅	22	1 0	11m	23	8.0	175	DO15
35	LPM22,A,-20	xx*	22	1.0	11m	23		150A	A1kk
36	LPZT22∅	10	22	1 0	8 0m	24	6 8	185	A86
37	TZ22,A,B,D	xxxx	22	1 0	20m	27	8 0	175	DO27
38	TZ22C	∅	22	1 0	20m	27	8 0	175	DO27
39	UZ8722	5	22	1 0	11m	23	8 0	175	A146h
40	UZ8822	10	22	1 0	11m	23	8 0	175	A146h
41	VR22,A,B	xxx	22	1.0	11m	23		125A	A1b
42#	Z4A22	1	22	1 0	25m	19	9 0 △	150J	A1ef
43#	Z4B22	5	22	1 0	25m	19	9.0 △	150J	A1ef
44#	Z4C22	10	22	1.0	25m	19	9 0 △	150J	A1ef
45#	Z4D22	15	22	1 0	25m	19	9 0 △	150J	A1ef
46	Z4XL22,B	xx	22	1 0	20m	72	9 0	165A	DO13
47	Z22,A,B,D	xxxx	22	1 0	11m	23	8 0	175	DO27
48	Z22C	∅	22	1 0	11m	23	8 0	175	DO27
49	ZA22,A,B	xxx	22	1 0	12m	23		150C	A1ew
50	ZB22#	†	22	1 0 §	11m	23		150A	A1bc
51	ZD22∅,A,B	xxx	22	1 0	12m	21	8 0	175A	A1cm
52#	ZEC22	20	22	1 0	9.0m	60	09	165A	DO3
53#	ZF22A	10	22	1 0	18m	21	7 3	150A	DO13
54	ZH22,A,B	xxx	22	1.0	12m	23	8 0	175A	DO1
55	ZM22,A,B,D	xxxx	22	1.0	11m	23	8 0	175	DO41
56	ZM22C	∅	22	1 0	11m	23	8.0	175	DO41
57#	7728	5	22	1 1	20m	20	7.5	125A	A1bu
58#	BZY92C22	5	22	1 1	25m	15	7 0	150J	DO13
59	1N4840,A,B	xxx	22	1.2	11m	23	8 7	175	DO29
60#	BZX67C22	5	22	1.3	25m	15	7 0	150J	S287
61#	ZD22#	5	22	1 3	25	15	7 0	150J	DO13
62	ZM22∅	10	22	1 3	25	15	7 0	150J	DO13
63#	ZU22	10	22	1 3	25	15	7 0	150J	A1bg
64#	ZY22	5	22	1.3	25	15	7 0	150J	A1bg
65▼	1N3797	20	22	1 5	17m	16	8 7	175S	C14∅
66▼	1N3797A	10	22	1 5	17m	16	8 7	175S	C14∅
67▼	1N3797B	5	22	1 5	17m	16	8 7	175S	C14∅
68	1N4473	5	22	1 5	12m	14		175A	A196
69	JAN1N4473	10	22	1 5	11m	14	8 7	175A	A1v
70#	1S4022,A	xx	22	1 5	10m	10	8 5	150A	DO1
71	1 5DKZ22,A,B	xxx	22	1 5	17m	16		175A	DO27
72	1 5JZ22,A,B,D	xxxx	22	1 5	17m	16	8 7	175	DO15
73	1 5JZ22C	∅	22	1 5	17m	16	8 7	175	DO15
74	1 5R22,A,B	xxx	22	1 5	17m	20	8 0	175A	A52c
75	1 5Z22,A,B,D	xxxx	22	1 5	17m	16	8 7	175	DO27
76	1 5Z22C	∅	22	1.5	17m	16	8.7	175	DO27
77#	BZY95C22	5	22	1 5	20m	13	16	175J	DO1
78	MC6322,A	xx	22	1 5	50m	48			A1q
79	MZ1000-21	10	22	1 5 §	12m	35 ∅	8 7	175J	A1ay
80#	SZ22C	5	22	1 5	20m	90	8 0	160A	A26
81#	Z2A22	1	22	1 5	25m	19	9.0 △	150J	A244
82#	Z2B22	5	22	1 5	25m	19	9 0 △	150J	A244
83#	Z2C22	10	22	1 5	25m	19	9.0 △	150J	A244
84#	Z2D22	15	22	1 5	25m	19	9 0 △	150J	A244
85#	Z3A22	1	22	1 5	100m	14	9 0 △	150J	S4f
86#	Z3B22	5	22	1 5	100m	14	9.0 △	150J	S4f
87#	Z3B220CF	20§∅	22	1 5	20m	15	9 0	175J	DO1
88#	Z3C22	10	22	1 5	100m	14	9.0 △	150J	S4f
89#	Z3D22	15	22	1 5	100m	14	9 0 △	150J	S4f
90#	ZC2022	5	22	1 8	1 0m	75	7.5	150	DO3
91#	ZD2022	10	22	1 8	1 0m	75	7 5	150	DO3
92	2R22,A,B	xxx	22	2 0	23m	20	8 0	175A	DO27
93	2VR22,A,B	xxx	22	2 0	23m	20			A3e
94	LMZ22,A,-20	xx*	22	2 0	22m	11		150A	A1kk
95	ZBC22	†	22	2 0 §	23m	10		150A	A1bc
96#	VR22F	5	22	2 2	20m	29		200S	DO3
97	1N5031	10	22	2.5	28m	9 7	8.0	150	A1gn
98	1N5031A	5	22	2 5	28m	9 7	8 0	150	A1gn
99#	BZX70C22	5	22	2 5	20m	13	160	150J	A171b
100	1N5074	5	22	3 0	30m	10		175A	A146j
101	3R22,A,B	xxx	22	3 0	35m	12	8.0	175A	A1rw
102	3TZ22,A,B,D	xxxx	22	3.0	50m	10	9.0	175	A1ec
103	3TZ22C	∅	22	3.0	50m	10	9 0	175	A1ec
104	3VR22,A,B	xxx	22	3 0	34m	12			A222
105	CZ5074	10	22	3.0	30m	10	190	175A	A196e
106#	FDZ22A	10	22	3 0 ∅	55m	7 3	7 3	150A	S303
107	M3Z22,A	xx	22	3.0	36m	10		150A	A1kk
108	MZ722	5	22	3 0	30m	10	8.0	175A	A146j
109	MZ822	10	22	3 0	30m	10	8 0	175A	A146j
110	MZ922	20	22	3.0	30m	10	8 0	175A	A146j
111#	NT3C22	5	22	3.0	5.0m	70		125J	S43a
112	UZ722	5	22	3.0	30m	10	8 0	175A	A146f
113	UZ822	10	22	3 0	30m	10	8 0	175A	A146f
114	UZ922	20	22	3.0	30m	10	8.0	175A	A146f
115	ZAC22,A,B	xxx	22	3.0	12m	23		150C	A1ey
116	ZCC22	†	22	3 0 §	30m	10		150A	A1ey
117	1N1597,A	xx	22	3.5	30m	14	9.0	200S	DO4
118	3Z22T20,10,5	xxx	22	3 5	30m	21	9.0	165	DO4
119#	4GZ22A	10	22	4 0	115m	250	8 0		S19q
120	1N4026,A,B	xxx	22	5.0	55m	5 0	8.7	180A	S82
121	1N4966	5	22	5.0	50m	5 0		175A	A146m
122	JAN1N4966	5	22	5 0	50m	5.0	8 5	175A	A248f
123♦	1N5358	20	22	5.0	50m			200A	A1ee
124▼	1N5358A	10	22	5 0	50m	3.5		200A	A1ee
125▼	1N5358B	5	22	5.0	50m	3.5		200A	A1ee
126▼	5ZS22,A,B	xxx	22	5 0 §	50m	3.5		200A	A1ts
127#	5328	10∅	22	5.0	40m	12		150J	A9h
128▼	CTZC22,A,B,D∅	xxxx	22	5 0 §	50m	3.5 ∅	8 0	175A	A1ey
129▼	CTZC22C∅	1	22	5 0 §	50m	3 5 ∅	8.0	175A	A1ey
130▼	CTZC22E∅	3	22	5 0 §	50m	3.5 ∅	8 0	175A	A1ey
131	DSZ5722	5	22	5 0	50m	5 0	8.5	175A	A60r
132	DSZ5822	10	22	5 0	50m	5 0	8 5	175A	A60r
133	MZ5722	5	22	5 0	50m	5 0	8 0	175A	A60f
134	MZ5822	10	22	5 0	50m	5 0	8.0	175A	A60f
135	MZ5922	20	22	5 0	50m	5 0	8 0	175A	A60f
136▼	TZC22,A,B,D	xxxx	22	5 0 §	50m	3 5 ∅	8 0	175A	A1ey
137▼	TZC22C	1	22	5 0 §	50m	3 5 ∅	8 0	175A	A1ey
138▼	TZC22E	3	22	5 0 §	50m	3 5 ∅	8 0	175A	A1ey
139▼	UZ5722	5	22	5.0	50m	5 0	8 5	175A	A146m
140♦	UZ5822	10	22	5.0	50m	5 0	8 5	175A	A146m
141	UZ5922	20	22	5.0	50m	5 0 ∅	8 0	175A	A146m
142	ZC22	†	22	5.0 §	50m	3.5		150A	A1ey
143#	VR22E	5	22	5.8	20m	29		200S	DO4
144#	KR52	10	22	8 0	50m	5 0	9 6	150A	S186
145	UZ4722	5	22	8.0	50m	5 0		175A	A146m
146	UZ4822	10	22	8 0	50m	5.0		175A	A146m
147	1N1359,A	xx	22	10	150m	3.0		175A	DO4
148	1N1359B	20	22	10	150m	3.0			S11e
149	1N1359C,CA∅	xx	22	10 §	15	3.0		175J	S19a
150	1N1420	5	22	10	100m	5.0 ∅	8.0	175C	S154
151	1N1608,A	xx	22	10	90m	6.0	9 0	200S	DO4
152	1N1821	10	22	10	250m	3 0	8 0	150A	S19a
153	1N1821A	5	22	10	250m	3.0	8.0	150A	S19a
154	1N1821C,CA∅	xx	22	10	250m	3 0	8.0	150A	S19a
155	1N1896	10	22	10	8 0m	24	6 4	200A	S82
156	1N1896A	5	22	10	8.0m	24	6.4	200A	S82
157	1N2049-1	5	22	10	150m	8.0	9.0	150J	DO4
158	1N2985,A,B	xxx	22	10	115m	5.0		175C	DO4∅
159	JAN1N2985B,RB	5	22	10	115m	5.0	8.7	150C	DO4
160	1N4270	20	22	10	115m	5.0	8.0	175C	S134
161	1N4270A	10	22	10	115m	5 0	8.0	175C	S134
162	1N4270B	5	22	10	115m	5 0	8.0	175C	S134
163	JAN1N4270B	5	22	10 §	115m	5.0	8.7	175S	S134a
164#	1S278	10	22	10	120m	5 0		150J	S19g
165#	1S5022,A	xx	22	10	50m	5.0	8.0	150C	DO4
166#	1S5022C∅	10	22	10	50m	5.0	8.0	150C	DO4
167#	1S6022	10	22	10	100m	5 0	6.0	150	DO4
168#	1S6022A	5	22	10	100m	5 0	6.0	150	DO4
169	10PZ22,A,B,D	xxxx	22	10	115m	5.0	8 0	175	DO4
170	10PZ22C	∅	22	10	115m	5.0	8.0	175	DO4
171	10RZ22,A,B,D	xxxx	22	10	150m	3.0	8 0	155	DO4
172	10RZ22C	∅	22	10	150m	3.0	8 0	155	DO4
173	10Z22T20,10,5	xxx	22	10	90m	9 0	9.0	165	DO4
174	AV8022	Ø2	22	10	150m	4 0		150A	S11
175#	CC4022	5	22	10	15m	15	7.0	150	S19
176#	CD4022	10	22	10	15m	15	7 0	150	S19
177#	GZ22A	10	22	10 ∅	41m	4 3	7 3	150A	DO4
178#	OAZ236	5	22	10	20m	63		150J	DO4
179#	PZ22A	10	22	10 ∅	91m	4.3	7.3	150A	S95a
180	PZT22∅	10	22	10 ∅	8.0m	24	6.8	185	S82
181	UZ7722	5	22	10	100m	4.5	8.0	175	S277∅
182	UZ7822	10	22	10	100m	4.5	8.0	175	S277∅
183	UZ7922	20	22	10	100m	4 5	8.0	175	S277∅
184#	Z5D220CF	20§∅	22	10	50m	5 0	8 0	150J	DO4
185#	ZC5022	5	22	10	100m	5 0	7.6	150A	S19
186#	ZD5022	10	22	10	100m	5.0	7.6	150A	S19
187#	BZZ28	5	22	13	20m	26	26	150	DO4
188#	4128	10∅	22	15	200m	1 5		150J	S87
189#	4228	10∅	22	15	200m	1.5		150J	S87
190#	BZY93C22	5	22	20 §	500m	1.8	16	175J	DO4∅
191#	SZ22B	5	22	25	100m	3.0	8.0	150B	S16
192#	ZL22	10	22	25 ∅	25	15	7.0	150J	M41
193#	ZX22	5	22	25 ∅	25	15	7.0	150J	M41
194#	4328	10∅	22	30	200m	1 5		150J	S87
195#	4428	10∅	22	30	200m	1 5		150J	S87
196	1N2819,A,B	xxx	22	50	570m	2.5	8.0	175S	C5a
197	JAN1N2819B,RB	5	22	50	570m	2.5	8 7	150C	C5a
198	1N3320	20	22	50	570m	2 5	8.0	175J	DO5
199	1N3320A	10	22	50	570m	2.5	8 0	175J	DO5
200	1N3320B	5	22	50	570m	2.5	8 0	175J	DO5

SYMBOLS AND CODES EXPLAINED IN INTERPRETER

2. SILICON REFERENCE DIODES

IN ORDER OF (1) REF. VOLTAGE, (2) DISSIPATION, and (3) TYPE No.

LINE No	3 TYPE No	TOLERANCE 1 20 10 5 2 ± (%)	NOM. REF VOLT. (V)	2 MAX. DISS @ 25°C (W)	TEST CUR. Izt (A)	MAX. DYN. IMP. (Ω)	TEMP. COEFF Tc	MAX. TEMP (°C)	DWG. No.
1	JAN1N3320B,RB	5	22	50	570m	2 5	8 7	150	DO5
2	50T22,A,B	xx*	22	50	570m	2 5	8 0		S19e
3	AV51022	5	22	50	570m	2 5	8 0	150C	C5a
4	75TE22,A	xx	22	66	450m	11m	1 0	125C	TO36
5#	BZY91C22	5	22	75 §	1	80	7 5	175J	DO5⊠
6	80TF22,A	xx	22	80	450m	11m	1 0	125C	M117c
7#	4528	10∅	22	100	230m	1.2		150J	S84
8#	4628	10∅	22	100	230m	1.2		150J	S84
9#	ZC722	5	22	100 §	50	4 5	7 8	175J	S125d⊠
10	250ZE22	10	22	250 §	7		8.0	190A	S83
11	250ZF22	10	22	250 §	7		8 0	190A	M56a
12	LID22,A	xx	22	400	5 6m	30		150A	M401
13	AV8	10	22 5	1.0	15m	20		150A	A19
14	AV108	10	22.5	10	150m	4.0		150A	S11
15#	ZS23	⊠∅§	22 8		5 0m	240	500m	150A	C3d
16#	1S476	10	23	25	5 0m	150	9 0	150J	DO7
17#	1S486	10	23	1.0	20m	130	9 0	150J	A115
18	AV2023	∅2	23	1 0	15m	20		150A	A19
19▼#	BZ230	5	23	1 0	10m	24	8 3	175J	A60t
20	EVR23,A,B	xxx	23	1.0	12m	34		175A	DO27
21	TC23A5A	5△⊠	23	1.0	10m	40	05	175A	A1ss
22	1N4062	5	23	1.5	10m	40	50	100	A1ss
23	1N4062A	5	23	1 5	10m	40	20	100	A1ss
24#	1S496	10	23	3.0	80m	100	9 0	150J	S112
25	AV8023	∅2	23	10	150m	4 0		150A	S11
26	AV51023	5	23	50	545m	2.5	8 0	150C	C5a
27	1N230∅	10	23 5	150m	200u			150A	C1
28	1N230A∅	5	23 5	150m	200u			150A	C1
29	1N1318,A	xx	23.5	15	20m		9 3	150A	C1
30	IDAZ230,A,B,C∅	xxxx	23 5	150m	200u			150A	A1hc
31#	RD24A	10	23.5	.20	5 0m	150	9 0	150S	A1dw
32▼	1N769	10	23 5	250m	5 0m	150	9 0	150	DO7
33▼	1N769A	5	23 5	250m	5 0m	150	9 0	150	DO7
34#	1S763	xxx	23 5	25	5 0m	150	9 3	150	C1d
35	1N2040	5	23.5	75	5 0m	300	9.0	150J	DO12
36#	RD24B	10	23 5	1 0	20m	21	9 0	150S	A164
37#	RD24C	10	23 5	3 0	60m	12	9 0	150S	S42
38	1N2049	5	23.5	10	150m	8 0	9 0	150J	DO4
39#	RD24D	10	23.5	10	200m	4 0	7.8	150S	S103
40	1N2049B	5	24		150m	8.0		150A	S19a
41	DSZ3024	10	24		30m	10	8.0		A266
42	M4Z24,A,-20	xx*	24	20	5.2m	33		150A	A1kk
43	1/4A24,A,B	xxx	24	25	2 6m	46	8 5	175	DO7
44	1/4M24Z,10,5	xxx	24	25	2 6m	46	8 3	175J	A1cy
45	25N24	20	24	25	2 6m	46		250	DO7
46	1N723,A	xx	24	25	4.0m	28	8.5	175A	DO7
47	1N723B	20	24	25	4 0m	28			DO7
48	1N769-2	5	24	.25	5 0m	150	9 0	150	DO7
49	1N4116	5	24	.25	25m	150		200J	DO7
50	1N4709	5	24	25	05m			200A	DO14
51#	BZY85C24V5	5	24	25 §	5.0m	80	10 △	150J	A171f
52#	HS2240	5	24	25	5 0m			175A	DO7
53	SV169	5	24	25	5 0m	300 ∅	8.6	150	DO7
54#	BZY85C24	5	24	30	5 0m	80	9 0	150J	DO7
55	MC6023,A	xx	24	30	5 0m	59		175	A2m
56#	Z1A24	1	24	320m	5.0m	80	10 △	150A	C29
57#	Z1B24	5	24	320m	5.0m	80	10 △	150A	C29
58#	Z1C24	10	24	320m	5 0m	80	10 △	150A	C29
59#	Z1D24	15	24	320m	5.0m	80	10 △	150A	C29
60	1N970,A,B	xxx	24	40	5 2m	33	8 0	175S	DO7
61	JAN1N970B	5	24	40	5.2m	33	8 8	175A	DO7
62	1N3527	5	24	40	5.0m	38	10	200A	DO7
63	JAN1N4116	5	24	400m	250u	150	9.0	175A	A1sx
64	1N5542	20	24	400m§	1.0m			175A	DO7
65	1N5542A	10	24	400m§	1.0m			175A	DO7
66	1N5542B	5	24	400m§	1 0m	100		175A	DO7
67▼	JAN1N5542B	5	24	400m	1 0m	100	8 8	200A	DO14
68	1N5542C	2	24	400m§	1.0m	100		175A	DO7
69	1N5542D	1	24	400m§	1.0m	100		175A	DO7
70▼	1N5745B	5	24	400m	5.0m	70	8 7	200J	DO35
71#	1S2240	10	24	400m	5 0m	75	8.0	150A	A1
72#	1S2240A	5	24	400m	5.0m	75	8.0	150A	A1
73#	5529	5	24	.40	5.0m	60	8 0	125A	A1ce
74#	BZX46C24	5	24	400m	5 2	33	8 0	175J	DO35
75#	BZX55C24	5	24	400m	5 0m	80	8 0	150J	DO35
76▼#	BZX71B24	2	24	400m§	5 0m	80		175J	DO35
77#	BZX71C24	5	24	400m§	5 0m	80		200S	A9m
78#	BZX79C24	5	24	400m	5.0m	70	210	200J	A257
79#	BZX83C24	5	24	400m	5.0m	80	8.0	150J	DO35
80▼#	BZY85B24	2	24	400m	5 0m	80	7 4	150J	DO7
81#	BZY88C24	5	24	40	5 0m	75		175J	DO7
82#	BZY94C24	5	24	.40				150J	DO7
83	C4025	10	24	.40	5 2m	33		175	A134a
84	C6025	10	24	400m	1.0m	70 ∅	8 2	175A	M371c
85	C6025A	5	24	400m	1 0m	70 ∅	8 2	175A	M371c
86	C6125	10	24	400m	1 0m	70	8 2	175A	M131a
87	C6125A	5	24	400m	1 0m	70	8 2	175A	M131a
88	CZA24D,10,5	xxx	24	400m⊠	250u	200	8.0	175J	M371
89	CZB24D,10,5	xxx	24	.40 ⊠	2.6m	46	8 0	175J	M371
90	CZC24D,10,5	xxx	24	40 ⊠	5.2m	33	8 0	175J	M371
91	CZD024,-5	xx	24	.40	6 0m	12		175	DO7
92	CZD24D,10,5	xxx	24	40 ⊠	250u	200	8 0	175J	M451
93	CZE24D,10,5	xxx	24	40 ⊠	5 2m	33	8.0	175J	M451
94	HM24,A,B	xxx	24	400m§	5 2m	33		175A	A196c
95#	HS7240	5	24	40	5.0m			175A	DO7
96#	M24Z	5 0	24	400m	5 0m	80	8 5	150A	DO7
97	MACZA24D,10,5	xxx	24	40 ⊠	250u	200	8 0	175J	M453
98	MACZB24D,10,5	xxx	24	40 ⊠	2 6m	46	8 0	175J	M453
99	MACZC24D,10,5	xxx	24	40 ⊠	5 2m	33	8 0	175J	M453
100	MACZD24D,10,5	xxx	24	40 ⊠	250u	200	8 0	175J	M453
101	MACZE24D,10,5	xxx	24	40 ⊠	5.2m	33	8.0	175J	M453
102	MBCZA24D,10,5	xxx	24	40 ⊠	250u	200	8.0	175J	M454
103	MBCZB24D,10,5	xxx	24	.40 ⊠	2.6m	46	8.0	175J	M454
104	MBCZC24D,10,5	xxx	24	400m⊠	5.2m	33	8 0	175J	M454
105	MBCZD24D,10,5	xxx	24	40 ⊠	250u	200	8 0	175J	M454
106	MBCZE24D,10,5	xxx	24	40 ⊠	5.2m	33	8.0	175J	M454
107	MCCZA24D,10,5	xxx	24	400m⊠	250u	200	8 0	175J	M455
108	MCCZB24D,10,5	xxx	24	40 ⊠	2.6m	46	8 0	175J	M455
109	MCCZC24D,10,5	xxx	24	40 ⊠	5 2m	33	8.0	175J	M455
110	MCCZD24D,10,5	xxx	24	.40 ⊠	250u	200	8.0	175J	M455
111	MCCZE24D,10,5	xxx	24	40 ⊠	5.2m	33	8 0	175J	M455
112	MDCZA24D,10,5	xxx	24	.40 ⊠	250u	200	8.0	150A	M410
113	MDCZB24D,10,5	xxx	24	.40 ⊠	2.6m	46	8.0	150A	M410
114	MDCZC24D,10,5	xxx	24	.40 ⊠	5.2m	33	8.0	150A	M410
115	MDCZD24D,10,5	xxx	24	.40 ⊠	250u	200	8.0	150A	M410
116	MDCZE24D,10,5	xxx	24	40 ⊠	5.2m	33	8.0	150A	M410
117	MZ500-25	10	24	.4 §	5.2m	35 ∅	8 8	175J	DO7
118	MZC24A10	†	24	400m§	2.1m	92	8.8	175J	M468
119	MZC24B10	§†	24	400m§	250u	150		175J	M468
120#	Z5A24	1	24	400m§	5.0m	80	9.0 △	200J	A1hs
121#	Z5B24	5	24	400m§	5.0m	80	9.0 △	200J	A1hs
122#	Z5C24	10	24	400m§	5.0m	80	9.0 △	200J	A1hs
123#	Z5D24	15	24	400m§	5 0m	80	9 0 △	200J	A1hs
124#	ZF24	5	24	400m	5.0m	80	9 0	150J	DO7
125#	ZP24#	5	24	400m	5.0m	80	9.0	150J	DO7
126	1/2Z24T5	5	24	50	5.2m	26		175	A94f
127	1N5252	20†	24	.50	5.2m			200A	DO7
128	1N5252A,B	§∅	24	.50	5.2m	33	8.8	200A	DO7
129	MTZ623,A	xx	24	.50	5.0m	59		175A	A60e
130	MZ92-24	†	24	500m§	5.2m		8.3	150J	C103
131	S5252,A,B	xxx	24	500m	5.2m	33	8.8	175	DO41
132#	ZC240	5	24	500m	5.0m	20	1.0		C124
133#	ZC241	5	24	500m	5.0m	20	500m		C124
134#	ZSF24	1	24	500m	7.0m	10	1.0	150S	M487a
135#	Z0A24	1	24	520m	5.0m	40	10 △	150J	A1ef
136#	Z0B24	5	24	520m	5.0m	40	10 △	150J	A1ef
137#	Z0C24	10	24	520m	5.0m	40	10 △	150J	A1ef
138#	Z0D24	15	24	520m	5.0m	40	10 △	150J	A1ef
139	1N4641	5	24	.60	5.2m	750	8.8	200A	DO14
140#	NT0.6C24	5	24	600m	5.0m	60		125J	M498
141#	UZ24	10	24	.60	25m	38	9.0	135A	DO3
142#	ZC024	5	24	.60	1.0m	80	7 7	100	A3k
143#	ZD024	10	24	60	1.0m	80	7.7	100	A3k
144#	ZW24	5	24	600m	5.0m	80	9.0	150J	A1bg
145	7JZ24	†	24	750m	5 2m	33	8.0	175	DO15
146	7Z24,A,B,D	xxxx	24	750m	5.2m	33	8.0	175	DO27
147	.7Z24C	⊠	24	750m	5.2m	33	8.0	175	DO27
148	7ZM24,A,B,D	xxxx	24	750m	5.2m	33	8.0	175	DO41
149	7ZM24C	⊠	24	750m	5 2m	33	8.0	175	DO41
150	1N2040-2	5	24	75	5.0m	300	9.0	150J	DO12
151	1N3688	20	24	750m	5.2m	33	8.0	175S	A1az
152	1N3688A	10	24	750m	5.2m	33	8.0	175S	A1az
153	1N3688B	5	24	750m	5 2m	33	8.0	175S	A1az
154	MC6123,A	xx	24	.75	10m	59		175A	A2d
155	MMZ24,A,-20	xx*	24	75	5.2m	33		150A	A1kk
156	MZ24T20,10,5	xxx	24	.75	6.0m	90	9.0	165A	A152
157	SV1034	5	24	.75	5.0m	300	8.6	150	A82f
158	WZ927	5	24	.75	5.0m	300 ∅		150A	A1fw
159	1A24M,A,B	xxx	24	1.0	11m	25		75A	DO15
160	1E24Z,10,5	xxx	24	1.0	11m	25	8.0	150A	A52g
161	1M24Z,10,5	xxx	24	1 0	11m	25	8.0	175S	DO1
162	1N1780,A	xx	24	1 0	15m	18		175S	DO13
163	1N3029	20	24	1.0	10m	25		175A	A31a
164	1N3029A	10	24	1.0	10m	25		175A	A31a
165	1N3029B	5	24	1.0	10m	25		175A	A31a
166	JAN1N3029B	5	24	1 0	11m	25	8.8	175A	A31c
167	1N4171	20	24	1 0	11m	15	8.0	175	DO29
168	1N4171A	10	24	1.0	11m	15	8.0	175	DO29
169	1N4171B	5	24	1.0	11m	15	8.0	175	DO29
170	1N4336,A,B	xxx	24	1 0	11m	25	8.0	300S	DO7
171♦	1N4413	20	24	1 0	10m	13		175S	A266a
172	1N4413A	10	24	1.0	11m	13	8.0	175A	A1cm
173	1N4413B	5	24	1 0	11m	13	8 0	175A	A1cm
174	1N4670	5	24	1 0	11m	600	8.8	200A	DO15
175	1N4749	10	24	1.0	11m	25		200A	A1ay
176	1N4749A	5	24	1.0	11m	25		200A	A1ay
177	1N5572	20	24	1 0 §	10m			200A	A196d
178	1N5572A	10	24	1.0 §	10m	25		200A	A196d
179	1N5572B	5	24	1 0 §	10m	25		200A	A196d
180	1N5642		24	1 0	1.0m		9.4m	175A	DO13
181	1N5642A		24	1 0	1.0m		9.4m	175A	DO13
182	1R24,A,B	xxx	24	1.0	11m	25	8.0	175A	A52c
183#	1S237	10	24	1 0	12m	30		150J	A56a
184#	1S3024	xx	24	1.0	10m	30	8.5	150	A3
185	1Z24,A,B	xxx	24	1 0	10m	25		150	A1ay

SYMBOLS AND CODES EXPLAINED IN INTERPRETER

2. SILICON REFERENCE DIODES

IN ORDER OF (1) REF. VOLTAGE, (2) DISSIPATION, and (3) TYPE No.

LINE No	TYPE No	TOLERANCE 20 10 5 2 ± (%)	NOM. REF. VOLT. (V)	MAX. DISS. @ 25°C (W)	TEST CUR. Izt (A)	MAX. DYN. IMP. (Ω)	TEMP. COEFF Tc	MAX. TEMP (°C)	DWG. No.
1	1Z24T20,10,5								
		xxx	24	1 0	9 0m	58	9 0	165A	A89c
2#	1ZC24T10,5	xx	24	1 0	9 0m	78	9 0	165A	A31p
3	AV2024	∅2	24	1 0	15m	20		150A	A19
4▼#	BZ240	5	24	1 0	10m	25	8.3	175J	A60t
5#	BZX29C24	5	24	1 0	10m	25	8.0	175J	A1cd
6#	BZX61C24	5	24	1 0	10m	25	6.0	175J	A3y
7♦	BZX85C24	5	24	1 0	10m	25	8 7	150A	DO15
8	CD31-00022	5	24	1 0	11m	25	8.8	200A	A1ce
9	CD31-12029	5	24	1.0	11m	25		200A	A1ce
10	CD32-12059	5	24	1.0	11m	25			
11	CSZ24	5	24	1.0	20m	28	100m	100C	A1gt
12	CZ24,A,B,D	xxxx	24	1.0	20m	28	8 0	175	DO15
13	CZ24C	∅	24	1 0	20m	28	8 0	175	DO15
14	EVR24,A,B	xxx	24	1 0	11m	34		175A	DO27
15	G24T20,10,5								
		xxx	24	1 0	10m	25		175	DO15
16	HW24,A,B	xxx	24	1 0	11m	25		175	A196
17	JZ24,A,B,D	xxxx	24	1 0	10m	25	8 0	175	DO15
18	JZ24C	∅	24	1 0	10m	25	8 0	175	DO15
19	LPM24,A,-20								
		xx*	24	1 0	10m	25		150A	A1kk
20	TZ24,A,B,D	xxxx	24	1 0	20m	28	8 0	175	DO27
21	TZ24C	∅	24	1 0	20m	28	8 0	175	DO27
22	UZ8724	5	24	1 0	10m	25	8 0	175	A146h
23	UZ8824	10	24	1 0	10m	25	8 0	175	A146h
24	VR24,A,B	xxx	24	1 0	10m	25		125A	A1b
25#	Z4A24	1	24	1 0	25m	21	10 △	150J	A1ef
26#	Z4B24	5	24	1 0	25m	21	10 △	150J	A1ef
27#	Z4C24	10	24	1 0	25m	21	10 △	150J	A1ef
28#	Z4D24	15	24	1 0	25m	21	10 △	150J	A1ef
29	Z24,A,B,D	xxxx	24	1 0	10m	25	8.0	175	DO27
30	Z24C	∅	24	1 0	10m	25	8 0	175	DO27
31	ZA24,A,B	xxx	24	1 0	11m	25		150C	A1ew
32	ZB24	†	24	1 0 §	10m	25		150A	A1bc
33	ZD24∅,A,B	xxx	24	1 0	11m	22	8 0	175A	A1cm
34	ZH24,A,B	xxx	24	1 0	11m	25	8 0	175A	DO1
35	ZM24,A,B,D	xxxx	24	1 0	10m	25	8 0	175	DO41
36	ZM24C	∅	24	1 0	10m	25	8.0	175	DO41
37#	7729	5	24	1 1	20m	20	8.0	125A	A1bu
38#	BZY92C24	5	24	1 1	25m	15	7 0	150J	DO13
39	1N4841,A,B	xxx	24	1 2	11m	25	8.8	175	DO29
40#	BZX67C24	5	24	1 3	25m	15	7 0	150J	S287
41#	ZD24#	5	24	1 3	25	15	7.0	150J	DO13
42#	ZY24	5	24	1 3	25	15	7.0	150J	A1bg
43▼	1N3798	20	24	1 5	16m	17	8.8	175S	C14∅
44▼	1N3798A	10	24	1 5	16m	17	8.8	175S	C14∅
45▼	1N3798B	5	24	1 5	16m	17	8.8	175S	C14∅
46	1N4474	5	24	1 5	11m	16		175A	A196
47	JAN1N4474	10	24	1.5	10m	16	8 8	175A	A1v
48#	1S4024,A	xx	24	1 5	10m	18	8.5	150A	DO1
49	1 5DKZ24,A,B								
		xxx	24	1 5	16m	17		175A	DO27
50	1 5JZ24,A,B,D								
		xxxx	24	1 5	16m	17	8 8	175	DO15
51	1 5JZ24C	∅	24	1.5	16m	17	8.8	175	DO15
52	1 5R24,A,B	xxx	24	1 5	16m	20	8.0	175A	A52c
53	1 5Z24,A,B,D								
		xxxx	24	1 5	16m	17	8 8	175	DO27
54	1 5Z24C	∅	24	1 5	16m	17	8 8	175	DO27
55#	BZY95C24	5	24	1 5	20m	14	18	175J	DO1
56	MC6323,A	xx	24	1 5	50m	50			A1q
57	MZ1000-22	10	24	1.5 §	11m	36 ∅	8 8	175J	A1ay
58#	SZ24C	5	24	1 5	20m	120	8 0	160A	A26
59#	Z2A24	1	24	1 5	25m	21	9 0 △	150J	A244
60#	Z2B24	5	24	1 5	25m	21	9 0 △	150J	A244
61#	Z2C24	10	24	1 5	25m	21	9 0 △	150J	A244
62#	Z2D24	15	24	1 5	25m	21	9 0 △	150J	A244
63#	Z3A24	1	24	1 5	100m	14	9 0 △	150J	S4f
64#	Z3B24	5	24	1 5	100m	14	9 0 △	150J	S4f
65#	Z3B240CF	20§∅	24	1 5	20m	16	9 0	175J	DO1
66#	Z3C24	10	24	1 5	100m	14	9 0 △	150J	S4f
67#	Z3D24	15	24	1 5	100m	14	9 0 △	150J	S4f
68#	ZC2024	5	24	1 8	1 0m	80	7 7	150	DO3
69#	ZD2024	10	24	1 8	1 0m	80	7 7	150	DO3
70	2R24,A,B	xxx	24	2 0	21m	20	8 0	175A	DO27
71	2VR24,A,B	xxx	24	2 0	21m	20			A3e
72	LMZ24,A,-20								
		xx*	24	2 0	21m	12		150A	A1kk
73	ZBC24	†	24	2 0 §	21m	10		150A	A1bc
74#	VR24F	5	24	2 2	20m	34		200S	DO3
75	1N5032	10	24	2 5	26m	10	8 0	150	A1gn
76	1N5032A	5	24	2 5	26m	10	8 0	150	A1gn
77	1N5075	5	24	3.0	30m	10		175A	A146j
78	3R24,A,B	xxx	24	3 0	31m	12	8 0	175A	A1rw
79	3TZ24,A,B,D								
		xxxx	24	3 0	30m	15	9 0	175	A1ec
80	3TZ24C	∅	24	3.0	30m	15	9.0	175	A1ec
81	3VR24,A,B	xxx	24	3 0	30m	12			A222
82	3Z24,A,B	xxx	24	3.0	30m	13		150	A222
83	CZ5075	10	24	3 0	30m	10	195	175A	A196e
84	M3Z24,A	xx	24	3 0	33m	11		150A	A1kk
85	MZ724	5	24	3 0	30m	10	8 0	175A	A146j
86	MZ824	10	24	3 0	30m	10	8 0	175A	A146j
87	MZ924	20	24	3 0	30m	10	8 0	175A	A146j
88#	NT3C24	5	24	3 0	5 0m	80		125J	S43a
89	UZ724	5	24	3 0	30m	10	8 0	175A	A60
90	UZ824	10	24	3 0	30m	10	8 0	175A	A146f
91	UZ924	20	24	3 0	30m	10	8 0	175A	A60
92	ZAC24,A,B	xxx	24	3 0	11m	25		150C	A1ey
93	ZCC24	†	24	3 0 §	30m	10		150A	A1ey
94	3T24,A,B	xx*	24	3 5	15m	18			DO4
95	3Z24T20,10,5								
		xxx	24	3 5	30m	28	9.0	165	DO4
96	1N4027,A,B	xxx	24	5 0	50m	6 0	8 8	180A	S82
97	1N4967	5	24	5 0	50m	5 0		175A	A146m
98	JAN1N4967	5	24	5 0	50m	5 0	9 0	175A	A248f
99♦	1N5359	20	24	5 0	50m			200A	A1ee
100▼	1N5359A	10	24	5 0	50m	3 5		200A	A1ee
101▼	1N5359B	5	24	5 0	50m	3 5		200A	A1ee
102▼	5ZS24,A,B	xxx	24	5 0 §	50m	3.5		200A	A1ts
103▼	CTZC24,A,B,D∅								
		xxxx	24	5 0 §	50m	3 5 ∅	8.0	175A	A1ey
104▼	CTZC24C∅	1	24	5 0 §	50m	3 5 ∅	8.0	175A	A1ey
105▼	CTZC24E∅	3	24	5.0 §	50m	3 5 ∅	8 0	175A	A1ey
106	DSZ5724	5	24	5 0	50m	5 0	9.0	175A	A60r
107	DSZ5824	10	24	5 0	50m	5.0	9 0	175A	A60r
108	MZ5724	5	24	5 0	50m	5 0	8 0	175A	A60f
109	MZ5824	10	24	5 0	50m	5 0	8 0	175A	A60f
110	MZ5924	20	24	5 0	50m	5 0	8 0	175A	A60f
111▼	TZC24,A,B,D								
		xxxx	24	5 0 §	50m	3 5 ∅	8 0	175A	A1ey
112▼	TZC24C	1	24	5 0 §	50m	3.5 ∅	8 0	175A	A1ey
113▼	TZC24E	3	24	5 0 §	50m	3 5 ∅	8.0	175A	A1ey
114▼	UZ5724	5	24	5.0	50m	5 0	9.0	175A	A146m
115♦	UZ5824	10	24	5 0	50m	5 0	9.0	175A	A146m
116	UZ5924	20	24	5 0	50m	5 0 ∅	8 0	175A	A146m
117	ZC24	†	24	5.0 §	50m	3.5		150A	A1ey
118#	VR24E	5	24	5.8	20m	34		200S	DO4
119	UZ4724	5	24	8 0	50m	5 0		175A	A146m
120	UZ4824	10	24	8 0	50m	5 0		175A	A146m
121	1N1360,A	xx	24	10	150m	3 0		175A	DO4
122	1N1360B	20	24	10	150m	3 0			S11e
123	1N1360C,CA∅								
		xx	24	10 §	15	3 0		175J	S19a
124	1N1822	10	24	10	250m	3 0	8.0	150A	S19a
125	1N1822A	5	24	10	250m	3 0	8.0	150A	S19a
126	1N1822C,CA∅								
		xx	24	10	250m	3 0	8 0	150A	S19a
127	1N2049-2	5	24	10	150m	8 0	9 0	150J	DO4
128	1N2986,A,B	xxx	24	10	105m	5 0		175C	DO4∅
129	JAN1N2986B,RB								
		5	24	10	105m	5 0	8 8	150C	DO4
130	1N4271	20	24	10	105m	5 0	8 0	175C	S134
131	1N4271A	10	24	10	105m	5 0	8 0	175C	S134
132	1N4271B	5	24	10	105m	5 0	8 0	175C	S134
133	JAN1N4271B	5	24	10 §	105m	5 0	8 8	175S	S134a
134#	1S279	10	24	10	120m	5.0		150J	S19g
135#	1S5024,A	xx	24	10	50m	5 0	8 0	150C	DO4
136#	1S5024C∅	10	24	10	50m	5 0	8 0	150C	DO4
137#	1S6024	10	24	10	100m	5 0	6 0	150	DO4
138#	1S6024A	5	24	10	100m	5 0	6 0	150	DO4
139	10PZ24,A,B,D								
		xxxx	24	10	105m	5 0	8 0	175	DO4
140	10PZ24C	∅	24	10	105m	5 0	8 0	175	DO4
141	10RZ24,A,B,D								
		xxxx	24	10	150m	3 0	8.0	155	DO4
142	10RZ24C	∅	24	10	150m	3 0	8 0	155	DO4
143	10Z24T20,10,5								
		xxx	24	10	90m	12	9 0	165	DO4
144	AV8024	∅2	24	10	150m	4 0		150A	S11
145#	CC4024	5	24	10	15m	18	7 2	150	S19
146#	CD4024	10	24	10	15m	18	7 2	150	S19
147#	OAZ237	5	24	10	20m	70		150J	DO4
148	UZ7724	5	24	10	100m	5 0	8 0	175	S277∅
149	UZ7824	10	24	10	100m	5 0	8 0	175	S277∅
150	UZ7924	20	24	10	100m	5 0	8 0	175	S277∅
151#	Z5D240CF	20§∅	24	10	50m	5 0	8.5	150J	DO4
152#	ZC5024	5	24	10	100m	5 0	7.8	150A	S19
153#	ZD5024	10	24	10	100m	5.0	7 8	150A	S19
154#	BZZ29	5	24	13	20m	33	24	150	DO4
155#	BZY93C24	5	24	20 §	500m	2 0	18	175J	DO4∅
156#	ZX24	5	24	25 ∅	25	15	7.0	150J	M41
157	1N2820,A,B	xxx	24	50	520m	2 6	8 0	175S	C5a
158	JAN1N2820B,RB								
		5	24	50	520m	2 6	8 8	150C	C5a
159	1N3321	20	24	50	520m	2 6	8 0	175J	DO5
160	1N3321A	10	24	50	520m	2 6	8 0	175J	DO5
161	1N3321B	5	24	50	520m	2 6	8 0	175J	DO5
162	JAN1N3321B,RB								
		5	24	50	520m	2 6	8 8	150	DO5
163	50T24,A,B	xx*	24	50	520m	2.6	8 0		S19e
164	AV51024	5	24	50	520m	2 6	8 0	150C	C5a
165#	BZY91C24	5	24	75 §	1	90	8 0	175J	DO5∅
166#	ZC724	5	24	100 §	50	5 0	8.2	175J	S125d∅
167	250ZE24	10	24	250 §	7		8 0	190A	S83
168	250ZF24	10	24	250 §	7		8 0	190A	M56a
169	LID24,A	xx	24	400	5 1m	33		150A	M401
170#	BZX70C24	5	24 3	2 5	20m	14	180	150J	A171b
171#	1124	10∅	24 5	25	3 0m	150	8 0	150J	C18f
172#	BZY83C24V5	5	24 5	.25	5.0m	200	10 △	150J	C1g
173#	5329	10∅	24.5	5 0	30m	16		150J	A9h
174#	4129	10∅	24 5	15	150m	2 0		150J	S87
175#	4229	10∅	24.5	15	150m	2 0		150J	S87
176#	4329	10∅	24 5	30	150m	2 0		150J	S87
177#	4429	10∅	24.5	30	150m	2 0		150J	S87
178#	4529	10∅	24 5	100	190m	1.5		150J	S87
179#	4629	10∅	24 5	100	190m	1 5		150J	S84
180	1N1738	5	24 8	80	7.5m	80	80	150C	A1gt
181	1N1738A	5	24 8	.80	7 5m	80	40	150C	A1gt
182	1/4A25,A,B	xxx	25	.25	2.5m	50	8 5	175	DO7
183	1/4M25Z,10,5								
		xxx	25	25	2 5m	50	8 3	175J	A1cy
184	25N25	20	25	25	2 5m	50		250	DO7
185	1N4117	5	25	25	150m			200J	DO7
186	1N4710	5	25	.25	05m			200A	DO14
187	JAN1N4117	5	25	400m	250u	150	9.0	175A	A1sx
188	1N5543	20	25	400m§	1 0m			175A	DO7
189	1N5543A	10	25	400m§	1 0m			175A	DO7
190	1N5543B	5	25	400m§	1 0m	100		175A	DO7
191▼	JAN1N5543B	5	25	400m	1 0m	100	9.0	200A	DO14
192	1N5543C	2	25	400m§	1 0m	100		175A	DO7
193	1N5543D	1	25	400m§	1 0m	100		175A	DO7
194	CZA25D,10,5								
		xxx	25	40 ∅	250u	200	8 0	175J	M371
195	CZB25D,10,5								
		xxx	25	40 ∅	2 5m	50	8 0	175J	M371
196	CZC25D,10,5								
		xxx	25	40 ∅	5 0m	37	8 0	175J	M371

SYMBOLS AND CODES EXPLAINED IN INTERPRETER

2. SILICON REFERENCE DIODES

IN ORDER OF (1) REF. VOLTAGE, (2) DISSIPATION, and (3) TYPE No.

LINE No	3 TYPE No.	TOLERANCE 20 10 5 2 ± (%)	1 NOM. REF. VOLT. (V)	2 MAX. DISS. @ 25°C (W)	TEST CUR. Izt (A)	MAX. DYN. IMP. (Ω)	TEMP. COEFF Tc	MAX. TEMP (°C)	DWG. No.
1	CZD25D,10,5	xxx	25	.40 ∅	250u	200	8 0	175J	M451
2	CZE25D,10,5	xxx	25	40 ∅	5 0m	37	8.0	175J	M451
3	MACZA25D,10,5	xxx	25	40 ∅	250u	200	8 0	175J	M453
4	MACZB25D,10,5	xxx	25	.40 ∅	2.5m	50	8 0	175J	M453
5	MACZC25D,10,5	xxx	25	.40 ∅	5.0m	37	8 0	175J	M453
6	MACZD25D,10,5	xxx	25	40 ∅	250u	200	8 0	175J	M453
7	MACZE25D,10,5	xxx	25	40 ∅	5 0m	37	8 0	175J	M453
8	MBCZA25D,10,5	xxx	25	40 ∅	250u	200	8.0	175J	M454
9	MBCZB25D,10,5	xxx	25	40 ∅	2 5m	50	8.0	175J	M454
10	MBCZC25D,10,5	xxx	25	400m∅	5 0m	37	8 0	175J	M454
11	MBCZD25D,10,5	xxx	25	.40 ∅	250u	200	8.0	175J	M454
12	MBCZE25D,10,5	xxx	25	40 ∅	5.0m	37	8.0	175J	M454
13	MCCZA25D,10,5	xxx	25	40 ∅	250u	200	8.0	175J	M455
14	MCCZB25D,10,5	xxx	25	40 ∅	2.5m	50	8 0	175J	M455
15	MCCZC25D,10,5	xxx	25	40 ∅	5 0m	37	8.0	175J	M455
16	MCCZD25D,10,5	xxx	25	40 ∅	250u	200	8 0	175J	M455
17	MCCZE25D,10,5	xxx	25	.40 ∅	5 0m	37	8.0	175J	M455
18	MDCZA25D,10,5	xxx	25	40 ∅	250u	200	8 0	150A	M410
19	MDCZB25D,10,5	xxx	25	40 ∅	2 5m	50	8 0	150A	M410
20	MDCZC25D,10,5	xxx	25	.40 ∅	5 0m	37	8 0	150A	M410
21	MDCZD25D,10,5	xxx	25	.40 ∅	250u	200	8.0	150A	M410
22	MDCZE25D,10,5	xxx	25	.40 ∅	5.0m	37	8.0	150A	M410
23	MZC25A10	†	25	400m§	2 0m	100	8 9	175J	M468
24	MZC25B10	§†	25	400m§	250u	150		175J	M468
25	1N5253	20†	25	.50	5.0m			200A	DO7
26	1N5253A,B	§∅	25	.50	5 0m	35	8.9	200A	DO7
27	MZ92-25	†	25	500m§	5.0m		8 3	150J	C103
28	S5253,A,B	xxx	25	500m	5.0m	35	8 9	175	DO41
29	7JZ25	†	25	750m	5.0m	38	8.0	175	DO15
30	7Z25,A,B,D	xxxx	25	750m	5 0m	38	8 0	175	DO27
31	.7Z25C	∅	25	750m	5 0m	38	8.0	175	DO27
32	7ZM25,A,B,D	xxxx	25	750m	5 0m	38	8.0	175	DO41
33	7ZM25C	∅	25	750m	5.0m	38	8.0	175	DO41
34	1E25Z,10,5	xxx	25	1.0	10m	30	8.0	150A	A52g
35	1M25Z,10,5	xxx	25	1.0	10m	30	8 0	175S	DO1
36#	1S238	10	25	1.0	12m	30		150J	A56a
37	AV2025	∅2	25	1.0	15m	20		150A	A19
38	CZ25,A,B,D	xxxx	25	1 0	20m	29	8.0	175	DO15
39	CZ25C	∅	25	1 0	20m	29	8 0	175	DO15
40	EVR25,A,B	xxx	25	1 0	11m	39		175A	DO27
41	JZ25,A,B,D	xxxx	25	1 0	10m	30	8 0	175	DO15
42	JZ25C	∅	25	1.0	10m	30	8.0	175	DO15
43	TZ25,A,B,D	xxxx	25	1 0	20m	29	8.0	175	DO27
44	TZ25C	∅	25	1 0	20m	29	8 0	175	DO27
45	Z25,A,B,D	xxxx	25	1 0	10m	30	8 0	175	DO27
46	Z25C	∅	25	1.0	10m	30	8 0	175	DO27
47	ZM25,A,B,D	xxxx	25	1 0	10m	30	8 0	175	DO41
48	ZM25C	∅	25	1 0	10m	30	8.0	175	DO41
49	1N3951	5	25	1 5	15m	18	8 4	175S	C12
50	1 5JZ25,A,B,D	xxxx	25	1 5	15m	18	8 9	175	DO15
51	1 5JZ25C	∅	25	1 5	15m	18	8.9	175	DO15
52	1 5M25Z,10,5	xxx	25	1 5	15m	18	8 0	175S	C12
53	1 5Z25,A,B,D	xxxx	25	1 5	15m	18	8 9	175	DO27
54	1 5Z25C	∅	25	1 5	15m	18	8 9	175	DO27
55	ZBC25	†	25	2 0 §	20m	10		150A	A1bc
56	1N5033	10	25	2.5	25m	11	8.0	150	A1gn
57	1N5033A	5	25	2.5	25m	11	8 0	150	A1gn
58	ZCC25	†	25	3 0 §	30m	10		150A	A1ey
59♦	1N5360	20	25	5.0	50m			200A	A1ee
60▼	1N5360A	10	25	5.0	50m	4 0		200A	A1ee
61▼	1N5360B	5	25	5 0	50m	4 0		200A	A1ee
62▼	5ZS25,A,B	xxx	25	5 0 §	50m	4 0		200A	A1ts
63▼	CTZC25,A,B,D∅	xxxx	25	5 0 §	50m	4.0 ∅	8 0	175A	A1ey
64▼	CTZC25C∅	1	25	5 0 §	50m	4 0 ∅	8 0	175A	A1ey
65▼	CTZC25E∅	3	25	5 0 §	50m	4.0 ∅	8.0	175A	A1ey
66▼	TZC25,A,B,D	xxxx	25	5 0 §	50m	4 0 ∅	8.0	175A	A1ey
67▼	TZC25C	1	25	5.0 §	50m	4 0 ∅	8 0	175A	A1ey
68▼	TZC25E	3	25	5.0 §	50m	4.0 ∅	8.0	175A	A1ey
69	ZC25	†	25	5 0 §	50m	4.0		150A	A1ey
70	1N2987,A,B	xxx	25	10	100m	6 0	8 0	175S	DO4
71#	1S280	10	25	10	120m	5.0		150J	S19g
72	10M25Z,10,5	xxx	25	10	100m	6.0		175J	DO4
73	AV8025	∅2	25	10	150m	4.0		150A	S11
74	1N2821,A,B	xxx	25	50	500m	2 7	8.0	175S	C5a
75	1N3322	20	25	50	500m	2 7	8 0	175J	DO5
76	1N3322A	10	25	50	500m	2 7	8 0	175J	DO5
77	1N3322B	5	25	50	500m	2 7	8 0	175J	DO5
78	AV51025	5	25	50	500m	2.7	8 0	150C	C5a
79	PS1503	5	25 2	.25	10m	45	20	150A	A1gc
80	PS1503A	5	25 2	25	10m	45	10	150A	A1gc
81	HRE25.5	5	25.5		10m	40	.50	70A	A126a
82	HRE25.5A	5	25 5		10m	40	.50	125A	A126a
83	1N2049C	5	26		150m	8.0		150A	A19a
84	1N769-3	5	26	.25	5.0m	150	9.0	150	DO7
85	SV171	5	26	25	5.0m	300 ∅	8.8	150	DO7
86	1N2040-3	5	26	.75	5.0m	300	9 0	150J	DO12
87♦	SV1035	5	26	750m	5.0m	300	8.8	150A	A127a
88	WZ928	5	26	75	5.0m	300 ∅		150A	A1fw
89	AV2026	∅2	26	1.0	15m	29		150A	A19
90▼#	BZ260	5	26	1 0	10m	28	8.4	175J	A60t
91	EVR26,A,B	xxx	26	1 0	10m	43		175A	DO27
92	IDA1Z26,A,B,C∅	xxxx	26	1.0	22m			200A	A1ht
93	1N2049-3	5	26	10	150m	8 0	9 0	150J	DO4
94	AV8026	∅2	26	10	150m	4 0		150A	S11
95	AV51026	5	26	50	480m	2.7	8.5	150C	C5a
96	250ZE26	10	26	250 §	7		8.0	190A	S83
97	250ZF26	10	26	250 §	7		8.0	190A	M56a
98	DSZ3027	10	27		25m	12	9.0		A266
99#	RZ27	5	27	.08	2.0m	420		150A	C18e
100#	RZZ27	10	27	.08	5 0m	450		150A	C18e
101	1N1991	10	27	150m	1 0m	200	9.6	150	C1
102	1N1991A	5	27	150m	1.0m	200	9 6	150	C1
103	1N1991B	1	27	150m	1.0m	200	9 6	150	C1
104#	AZ27	10	27	15	5.0m	130		170A	DO7
105#	Z27∅	5	27	150m	2.0m	420		150A	C18d
106#	ZZ27∅	10	27	15	5 0m	450		150A	C18d
107	1N1937,A,B	xx1	27	.20	1 0m	200	9.6	150A	A82e
108#	RZ27A	10	27	20	150m	5.6	7.7	125A	DO5
109	1/4A27,A,B	xxx	27	25	2.3m	58	8.5	175	DO7
110	1/4M27Z,10,5	xxx	27	25	2.3m	58	8.4	175J	A1cy
111	25N27	20	27	.25	2.3m	58		250	DO7
112	1N724,A	xx	27	.25	4.0m	35	8.8	175A	DO7
113	1N724B	20	27	.25	4.0m	35			DO7
114	1N4118	5	27	.25	25m	150		200J	DO7
115	1N4711	5	27	.25	05m			200A	DO14
116#	1127	10∅	27	.25	3.0m	150	9.0	150J	C18f
117#	HS2270	5	27	.25	5.0m			175A	DO7
118#	MZ27A	10	27	.25	3.9m	68	7.7	150A	DO7
119#	BZY85C27	5	27	.30	5.0m	80	9.0	150J	DO7
120	MC6024,A	xx	27	30	1.0m	69		175	A2m
121#	Z1A27	1	27	320m	5.0m	80	10 △	150A	C29
122#	Z1B27	5	27	320m	5.0m	80	10 △	150A	C29
123#	Z1C27	10	27	320m	5.0m	80	10 △	150A	C29
124#	Z1D27	15	27	320m	5.0m	80	10 △	150A	C29
125	1N669	5	27	.40	5.0m	35	8.5	200S	A31b
126	1N971,A,B	xxx	27	.40	4.6m	41	8.5	175S	DO7
127	JAN1N971B	5	27	40	4 6m	41	9.0	175A	DO7
128	1N1964,A,B	xx1	27	.40	1.0m	200	9.6	150	DO7
129	1N3528	5	27	.40	4.0m	40	10	200A	DO7
130	JAN1N4118	5	27	400m	250u	150	9.0	175A	A1sx
131▼	1N5746B	5	27	400m	2 0m	80	8 7	200J	DO35
132#	1S2270	10	27	400m	5.0m	85	8.5	150A	A1
133#	1S2270A	5	27	400m	5 0m	85	8.5	150A	A1
134#	5530	5	27	.40	5.0m	60	8.5	125A	A1ce
135#	BZX46C27	5	27	400m	4 6m	41	8.5	175J	DO35
136#	BZX55C27	5	27	400m	5.0m	80	8.5	150J	DO35
137#	BZX79C27	5	27	400m	5 0m	80	235	200J	A257
138#	BZX83C27	5	27	400m	5 0m	80	8.5	150J	DO35
139▼#	BZY85B27	2	27	400m	5.0m	80	7.4	150J	DO7
140#	BZY88C27	5	27	40	5 0m	85		175J	DO7
141#	BZY94C27	5	27	40				150J	DO7
142	C4026	10	27	.40	4 6m	41		175	A134a
143	C6026	10	27	400m	1.0m	80 ∅	8.4	175A	M371c
144	C6026A	5	27	400m	1 0m	80 ∅	8.4	175A	M371c
145	C6126	10	27	400m	1 0m	80	8.4	175A	M131a
146	C6126A	5	27	400m	1 0m	80	8.4	175A	M131a
147	CZA27D,10,5	xxx	27	40 ∅	250u	200	8.5	175J	M371
148	CZB27D,10,5	xxx	27	.40 ∅	2 3m	58	8.5	175J	M371
149	CZC27D,10,5	xxx	27	.40 ∅	4.6m	41	8.5	175J	M371
150	CZD27D,10,5	xxx	27	.40 ∅	250u	200	8.5	175J	M451
151	CZE27D,10,5	xxx	27	.40 ∅	4.6m	41	8.5	175J	M451
152	HM27,A,B	xxx	27	400m§	4.6m	41		175A	A196c
153#	HS7270	5	27	.40	5.0m			175A	DO7
154	M4Z27,A,-20	xx*	27	40	4.6m	41		150A	A1kk
155#	M27Z	5 0	27	400m	5.0m	80	8 5	150A	DO7
156	MACZA27D,10,5	xxx	27	400m∅	250u	200	8.5	175J	M453
157	MACZB27D,10,5	xxx	27	40 ∅	2.3m	58	8.5	175J	M453
158	MACZC27D,10,5	xxx	27	40 ∅	4.6m	41	8.5	175J	M453
159	MACZD27D,10,5	xxx	27	40 ∅	250u	200	8.5	175J	M453
160	MACZE27D,10,5	xxx	27	40 ∅	4.6m	41	8.5	175J	M453
161	MBCZA27D,10,5	xxx	27	.40 ∅	250u	200	8.5	175J	M454
162	MBCZB27D,10,5	xxx	27	40 ∅	2 3m	58	8 5	175J	M454
163	MBCZC27D,10,5	xxx	27	40 ∅	4 6m	41	8 5	175J	M454
164	MBCZD27D,10,5	xxx	27	40 ∅	250u	200	8 5	175J	M454
165	MBCZE27D,10,5	xxx	27	40 ∅	4 6m	41	8 5	175J	M454
166	MCCZA27D,10,5	xxx	27	40 ∅	250u	200	8.5	175J	M455
167	MCCZB27D,10,5	xxx	27	.40 ∅	2.3m	58	8 5	175J	M455
168	MCCZC27D,10,5	xxx	27	.40 ∅	4 6m	41	8.5	175J	M455

SYMBOLS AND CODES EXPLAINED IN INTERPRETER

2. SILICON REFERENCE DIODES

IN ORDER OF (1) REF. VOLTAGE, (2) DISSIPATION, and (3) TYPE No.

LINE No	3 TYPE No.	TOLERANCE 1 20 10 5 2 ± (%)	NOM. REF. VOLT. (V)	2 MAX. DISS. @ 25°C (W)	TEST CUR. Izt (A)	MAX. DYN IMP. (Ω)	TEMP COEFF Tc	MAX. TEMP (°C)	DWG. No
1	MCCZD27D,10,5	xxx	27	.40 ∅	250u	200	8.5	175J	M455
2	MCCZE27D,10,5	xxx	27	40 ∅	4.6m	51	8 5	175J	M455
3	MDCZA27D,10,5	xxx	27	40 ∅	250u	200	8 5	150A	M410
4	MDCZB27D,10,5	xxx	27	40 ∅	2 3m	58	8 5	150A	M410
5	MDCZC27D,10,5	xxx	27	40 ∅	4 6m	41	8 5	150A	M410
6	MDCZD27D,10,5	xxx	27	40 ∅	250u	200	8 5	150A	M410
7	MDCZE27D,10,5	xxx	27	40 ∅	4 6m	41	8 5	150A	M410
8	MZ500-26	10	27	4 §	4.6m	45 ∅	9 0	175J	DO7
9	MZC27A10	†	27	400m§	1.9m	115	9 0	175J	M468
10	MZC27B10	§†	27	400m§	250u	150		175J	M468
11#	ZF27	5	27	400m	5 0m	80	9.0	150J	DO7
12#	ZG27	10	27	400m	5.0m	100	9.0	150J	DO7
13#	ZP27#	5	27	400m	5 0m	80	9 0	150J	DO7
14	1/2Z27T5	5	27	50	4 6m	32		175	A94f
15	1N3407∅	10	27	50	3 0m	60	6 8	200A	P5
16	1N3420	10	27	.50	1.0m	280	7 8	200A	P5
17	1N5254	20†	27	50	4 6m			200A	DO7
18	1N5254A,B	§∅	27	.50	4 6m	41	9 0	200A	DO7
19#	DZ27A	10	27	50	7 5m	56	7 7	150A	A100
20▼	HEPZ0234-RT	10	27	500m	4 6	98			C103
21	IDAZ3407,A,B,C∅	xxxx	27	500m	3 0m	60	6 8	200A	A1hc
22	MTZ624,A	xx	27	50	1 0m	69		175A	A60e
23	MZ92-27	†	27	500m§	4 6m		8 4	150J	C103
24	S5254,A,B	xxx	27	500m	4 6m	41	9 0	175	DO41
25#	ZOD27	15	27	50	16m	70	9 0	150J	A1ef
26#	ZSF27	1	27	500m	7 0m	10	1 0	150S	M487a
27#	ZOA27	1	27	520m	5 0m	50	10 △	150J	A1ef
28#	ZOB27	5	27	520m	5.0m	50	10 △	150J	A1ef
29#	ZOC27	10	27	520m	5 0m	50	10 △	150J	A1ef
30	1N4642	5	27	.60	4.6m	750	9 0	200A	DO14
31#	NTO.6C27	5	27	600m	5 0m	60		125J	M498
32#	UZ27	10	27	60	22m	46	9 5	135A	DO3
33#	ZC027	5	27	.60	1 0m	90	8 0	100	A3k
34#	ZD027	10	27	60	1 0m	90	8 0	100	A3k
35#	ZW27	5	27	600m	5 0m	80	9 0	150J	A1bg
36	ZZ27△	10	27	.60	4 0m	35	9 5	175A	M222
37	7JZ27	†	27	750m	4 6m	41	8 5	175	DO15
38	7Z27,A,B,D	xxxx	27	750m	4 6m	41	8 5	175	DO27
39	7Z27C	∅	27	750m	4 6m	41	8 5	175	DO27
40	7ZM27,A,B,D	xxxx	27	750m	4 6m	41	8 5	175	DO41
41	7ZM27C	∅	27	750m	4 6m	41	8 5	175	DO41
42	1N1517,A	xx	27	75	5.0m	82	9 5	200S	DO12
43	1N3689	20	27	750m	4 6m	41	8 5	175S	A1az
44	1N3689A	10	27	750m	4 6m	41	8 5	175S	A1az
45	1N3689B	5	27	750m	4 6m	41	8 5	175S	A1az
46	MC6124,A	xx	27	75	5 0m	69		175A	A2d
47	MMZ27,A,-20	xx*	27	75	4 6m	41		150A	A1kk
48	MZ27T20,10,5	xxx	27	75	5 0m	120	9 5	165A	A152
49	1A27M,A,B	xxx	27	1 0	9 5m	35		75A	DO15
50	1E27Z,10,5	xxx	27	1 0	9 5m	35	8 5	150A	A52g
51	1M27Z,10,5	xxx	27	1 0	9 5m	35	8 5	175S	DO1
52	1N1430	5	27	1 0	5 0m	50 ∅	8 5	200A	A154
53	1N1528,A	xx	27	1 0	7 0m	45	9 5	200S	DO3
54	1N1781,A	xx	27	1 0	15m	23		175S	DO13
55	1N1881	10	27	1 0	8.0m	27	6 6	200C	A126
56	1N1881A	5	27	1 0	8 0m	27	6 6	200C	A126
57	1N1881B	1	27	1 0	8.0m	18 △	6 6	175A	DO13
58	1N3030,A,B	xxx	27	1 0	9 5m	35		175A	A31a
59	JAN1N3030B	5	27	1 0	9 5m	35	9 0	175A	A31c
60	1N4172	20	27	1 0	9 5m	35	8 5	175	DO29
61	1N4172A	10	27	1 0	9 5m	35	8 5	175	DO29
62	1N4172B	5	27	1 0	9 5m	35	8 5	175	DO29
63	1N4337,A,B	xxx	27	1 0	9.5m	35	8 5	300S	DO7
64♦	1N4414	20	27	1 0	9 5m	14		175S	A266a
65	1N4414A	10	27	1 0	9.5m	14	8 5	175A	A1cm
66	1N4414B	5	27	1 0	9 5m	14	8.5	175A	A1cm
67	1N4671	5	27	1 0	9 5m	600	9.0	200A	DO15
68	1N4750	10	27	1 0	9.5m	35		200A	A1ay
69	1N4750A	5	27	1 0	9.5m	35		200A	A1ay
70	1N5573	20	27	1 0 §	9.5m			200A	A196d
71	1N5573A	10	27	1 0 §	9 5m	35		200A	A196d
72	1N5573B	5	27	1 0 §	9.5m	35		200A	A196d
73	1N5643		27	1 0	1.0m		9 6m	175A	DO13
74	1N5643A		27	1 0	1 0m		9 6m	175A	DO13
75	1R27,A,B	xxx	27	1 0	9 5m	35	8 0	175A	A52c
76#	1S239	10	27	1 0	12m	30		150J	A56a
77#	1S3027	xx	27	1 0	10m	40	8 5	150	A3
78	1Z27,A,B	xxx	27	1 0	9 5m	35		150	A1ay
79	1Z27T20,10,5	xxx	27	1 0	7 0m	68	9 5	165A	A89c
80#	1ZC27T10,5	xx	27	1 0	7 0m	100	9 5	165A	A31p
81	AV2027	∅2	27	1 0	15m	29		150A	A19
82▼#	BZ270	5	27	1 0	10m	30	8 4	175J	A60t
83#	BZX29C27	5	27	1 0	10m	35	8 5	175J	A1cd
84#	BZX61C27	5	27	1 0	10m	35	6 0	175J	A3y
85♦	BZX85C27	5	27	1 0	10m	30	8 8	150A	DO15
86	CD31-00023	5	27	1 0	9 5m	35	9 0	200A	A1ce
87	CD31-12030	5	27	1 0	9 5m	30		200A	A1ce
88	CD32-12060	5	27	1 0	9 5m	35			
89	CZ27,A,B,D	xxxx	27	1 0	20m	31	8 5	175	DO15
90	CZ27C	∅	27	1 0	20m	31	8 5	175	DO15
91	EVR27,A,B	xxx	27	1 0	10m	45		175A	DO27
92#	EZ27A	10	27	1 0	15m	750	7 7		A1em
93	G27T20,10,5	xxx	27	1.0	9 5m	35		175	DO15
94#	GZ27	10	27	1 0	25m	50 △		150A	S115
95▼	HEP608-RT	5	27	1 0	9.5	35			DO41
96	HW27,A,B	xxx	27	1 0	9.5m	35		175	A196
97	JZ27,A,B,D	xxxx	27	1 0	9.5m	35	8.5	175	DO15
98	JZ27C	∅	27	1 0	9 5m	35	8.5	175	DO15
99	LPM27,A,-20	xx*	27	1 0	9 5m	35		150A	A1kk
100	LPZT27∅	10	27	1 0	8.0m	27	7.4	185	A86
101	TC27A5A	5△∅	27	1.0	10m	45	05	175A	A1ss
102	TZ27,A,B,D	xxxx	27	1 0	20m	31	8.5	175	DO27
103	TZ27C	∅	27	1 0	20m	31	8.5	175	DO27
104	UZ8727	5	27	1 0	9.5m	35	9 0	175	A146h
105	UZ8827	10	27	1 0	9 5m	35	9.0	175	A146h
106	VR27,A,B	xxx	27	1.0	9 5m	35		125A	A1b
107#	Z4A27	1	27	1 0	25m	25	10 △	150J	A1ef
108#	Z4B27	5	27	1.0	25m	25	10 △	150J	A1ef
109#	Z4C27	10	27	1 0	25m	25	10 △	150J	A1ef
110#	Z4D27	15	27	1.0	25m	25	10 △	150J	A1ef
111	Z27,A,B,D	xxxx	27	1 0	9 5	35	8 5	175	DO27
112	Z27C	∅	27	1 0	9 5m	35	8 5	175	DO27
113	ZA27,A,B	xxx	27	1.0	9.5m	35		150C	A1ew
114	ZB27	†	27	1 0 §	9 5m	35		150A	A1bc
115	ZD27∅,A,B	xxx	27	1.0	9.5m	30	8.5	175A	A1cm
116#	ZEC27	20	27	1 0	7 0m	100	10	165A	DO3
117#	ZF27A	10	27	1 0	15m	28	7 7	150A	DO13
118	ZH27,A,B	xxx	27	1 0	9.5m	35	8 5	175A	DO1
119	ZM27,A,B,D	xxxx	27	1 0	9 5m	35	8.5	175	DO41
120	ZM27C	∅	27	1 0	9.5m	35	8.5	175	DO41
121#	7730	5	27	1 1	20m	25	8 5	125A	A1bu
122#	BZY92C27	5	27	1 1	25m	15	7.0	150J	DO13
123	1N4842,A,B	xxx	27	1 2	9 3m	35	9 0	175	DO29
124#	BZX67C27	5	27	1 3	25m	15	7 0	150J	S287
125#	ZD27#	5	27	1 3	25	15	7.0	150J	DO13
126	ZM27∅	10	27	1 3	25	15	7.0	150J	DO13
127#	ZU27	10	27	1 3	25	15	7 0	150J	A1bg
128#	ZY27	5	27	1.3	25	15	7 0	150J	A1bg
129▼	1N3799	20	27	1 5	14m	20	9 0	175S	C14∅
130▼	1N3799A	10	27	1 5	14m	20	9 0	175S	C14∅
131▼	1N3799B	5	27	1 5	14m	20	9 0	175S	C14∅
132	1N4063	5	27	1 5	10m	45	.50	100	A1ss
133	1N4063A	5	27	1 5	10m	45	.20	100	A1ss
134	1N4475	5	27	1.5	9 5m	18		175A	A196
135	JAN1N4475	10	27	1 5	9 5m	18	9 0	175A	A1v
136#	1S4027,A	xx	27	1 5	10m	19	8.5	150A	DO1
137	1 5DKZ27,A,B	xxx	27	1 5	14m	20		175A	DO27
138	1.5JZ27,A,B,D	xxxx	27	1 5	14m	20	9 0	175	DO15
139	1 5JZ27C	∅	27	1 5	14m	20	9.0	175	DO15
140	1 5R27,A,B	xxx	27	1.5	15m	25	8 5	175A	A52c
141	1 5Z27,A,B,D	xxxx	27	1 5	14m	20	9.0	175	DO27
142	1 5Z27C	∅	27	1 5	14m	20	9.0	175	DO27
143#	BZY95C27	5	27	1 5	20m	18	20	175J	DO1
144	MC6324,A	xx	27	1 5	25m	60			A1q
145	MZ1000-23	10	27	1 5 §	9.5m	53 ∅	9.0	175J	A1ay
146#	SZ27C	5	27	1 5	20m	120	9 0	160A	A26
147#	Z2A27	1	27	1 5	100m	15	9 0 △	150J	S4f
148#	Z2B27	5	27	1 5	100m	15	9 0 △	150J	S4f
149#	Z2C27	10	27	1 5	100m	15	9 0 △	150J	S4f
150#	Z2D27	∅∅§§	27	1 5		27		150J	A6b
151#	Z3A27	1	27	1 5	100m	15	9 0 △	150J	S4f
152#	Z3B27	5	27	1 5	100m	15	9.0 △	150J	S4f
153#	Z3B270CF	20§∅	27	1 5	20m	19	9 5	175J	DO1
154#	Z3C27	10	27	1 5	100m	15	9 0 △	150J	S4f
155#	Z3D27	∅∅§§	27	1 5	50m	15		150J	S4f
156#	ZC2027	5	27	1 8	1.0m	90	8 0	150	DO3
157#	ZD2027	10	27	1 8	1.0m	90	8 0	150	DO3
158	2R27,A,B	xxx	27	2 0	18m	25	8 5	175A	DO27
159	2VR27,A,B	xxx	27	2 0	18m	25			A3e
160	LMZ27,A,-20	xx*	27	2 0	18m	17		150A	A1kk
161	ZBC27	†	27	2 0 §	19m	12		150A	A1bc
162#	VR27F	5	27	2 2	20m	39		200S	DO3
163	1N5034	10	27	2 5	23m	12	8.5	150	A1gn
164	1N5034A	5	27	2 5	23m	12	8.5	150	A1gn
165#	BZX70C27	5	27	2 5	20m	18	200	150J	A171b
166	1N5076	5	27	3 0	25m	12		175A	A146j
167	3R27,A,B	xxx	27	3 0	29m	18	8 5	175A	A1rw
168	3TZ27,A,B,D	xxxx	27	3.0	30m	15		175	A1ec
169	3TZ27C	∅	27	3.0	30m	15		175	A1ec
170	3VR27,A,B	xxx	27	3.0	28m	18			A222
171	3Z27,A,B	xxx	27	3 0	29m	16		150	A222
172	CZ5076	10	27	3 0	25m	12	210	175A	A196e
173#	FDZ27A	10	27	3.0 ∅	45m	9 4	7.7	150A	S303
174	M3Z27,A	xx	27	3 0	30m	12		150A	A1kk
175	MZ727	5	27	3 0	25m	12	9.0	175A	A146j
176	MZ827	10	27	3 0	25m	12	9 0	175A	A146j
177	MZ927	20	27	3.0	25m	12	9.0	175A	A146j
178#	NT3C27	5	27	3 0	5 0m	80		125J	S43a
179	UZ727	5	27	3 0	25m	12	9.0	175A	A60
180	UZ827	10	27	3 0	25m	12	9 0	175A	A146f
181	UZ927	20	27	3 0	25m	12	9 0	175A	A60
182	ZAC27,A,B	xxx	27	3 0	9.5m	35		150C	A1ey
183	ZCC27	†	27	3 0 §	25m	12		150A	A1ey
184	1N1598,A	xx	27	3 5	25m	24	9.5	200S	DO4
185	3Z27T20,10,5	xxx	27	3 5	25m	36	9 5	165	DO4
186#	4GZ27A	10	27	4.0	95m	250	8.5		S19q
187	1N4028,A,B	xxx	27	5 0	45m	6 0	9.0	180A	S82
188	1N4968	5	27	5 0	50m	6 0		175A	A146m
189	JAN1N4968	5	27	5 0	50m	6 0	9.0	175A	A248f
190♦	1N5361	20	27	5 0	50m			200A	A1ee
191▼	1N5361A	10	27	5 0	50m	5.0		200A	A1ee
192▼	1N5361B	5	27	5 0	50m	5 0		200A	A1ee
193▼	5ZS27,A,B	xxx	27	5 0 §	50m	5 0		200A	A1ts
194#	5330	10∅	27	5 0	30m	16		150J	A9h
195▼	CTZC27,A,B,D∅	xxxx	27	5 0 §	50m	5.0 ∅	8.5	175A	A1ey
196▼	CTZC27C∅	1	27	5 0 §	50m	5 0 ∅	8.5	175A	A1ey
197▼	CTZC27E∅	3	27	5.0 §	50m	5 0 ∅	8.5	175A	A1ey

SYMBOLS AND CODES EXPLAINED IN INTERPRETER

2. SILICON REFERENCE DIODES

IN ORDER OF (1) REF. VOLTAGE, (2) DISSIPATION, and (3) TYPE No.

LINE No	TYPE No. (3)	TOLERANCE (1) 20 10 5 2 ± (%)	NOM. REF. VOLT (V)	(2) MAX. DISS @ 25°C (W)	TEST CUR Izt (A)	MAX. DYN IMP. (Ω)	TEMP. COEFF Tc	MAX. TEMP (°C)	DWG No.
1	DSZ5727	5	27	5 0	50m	6 0	9 0	175A	A60r
2	DSZ5827	10	27	5.0	50m	6.0	9.0	175A	A60r
3	HZ27	10	27	5.0	40m	50	0 0	165C	M221
4	MZ5727	5	27	5.0	50m	6 0	9 0	175A	A60f
5	MZ5827	10	27	5 0	50m	6 0	9 0	175A	A60f
6	MZ5927	20	27	5 0	50m	6 0	9 0	175A	A60f
7▼	TZC27,A,B,D	xxxx	27	5.0 §	50m	5 0 ∅	8.5	175A	A1ey
8▼	TZC27C	1	27	5.0 §	50m	5 0 ∅	8 5	175A	A1ey
9▼	TZC27E	3	27	5 0 §	50m	5 0 ∅	8.5	175A	A1ey
10▼	UZ5727	5	27	5.0	50m	6.0	9.0	175A	A146m
11♦	UZ5827	10	27	5.0	50m	6 0	9.0	175A	A146m
12	UZ5927	20	27	5.0	50m	6 0 ∅	9 0	175A	A146m
13	ZC27	†	27	5.0 §	50m	5 0		150A	A1ey
14#	VR27E	5	27	5.8	20m	39		200S	DO4
15#	KR53	10	27	8 0	50m	5 0	9 7	150A	S186
16	UZ4727	5	27	8 0	50m	6 0		175A	A146m
17	UZ4827	10	27	8 0	50m	6 0		175A	A146m
18	1N1361,A	xx	27	10	150m	3 0		175A	DO4
19	1N1361B	20	27	10	150m	3 0			S11e
20	1N1361C,CA∅								
		xx	27	10 §	15	3 0		175J	S19a
21	1N1421	5	27	10	50m	8 0 ∅	8 5	175C	S154
22	1N1609,A	xx	27	10	70m	10	9 5	200S	DO4
23	1N1823	10	27	10	250m	3 0	8 0	150A	S19a
24	1N1823A	5	27	10	250m	3 0	8.0	150A	S19a
25	1N1823C,CA∅								
		xx	27	10	250m	3 0	8 0	150A	S19a
26	1N1897	10	27	10	8.0m	27	6.6	200A	S82
27	1N1897A	5	27	10	8 0m	27	6 6	200A	S82
28	1N2988,A,B	xxx	27	10	95m	7 0		175C	DO4∅
29	JAN1N2988B,RB	5	27	10	95m	7 0	9 0	150C	DO4
30	1N4272	20	27	10	95m	7 0	8 5	175C	S134
31	1N4272A	10	27	10	95m	7.0	8 5	175C	S134
32	1N4272B	5	27	10	95m	7 0	8 5	175C	S134
33	JAN1N4272B	5	27	10 §	95m	7 0	9 0	175S	S134a
34#	1S281	10	27	10	120m	5 0		150J	S19g
35#	1S5027,A	xx	27	10	50m	5 0	8.0	150C	DO4
36#	1S5027C∅	10	27	10	50m	5.0	8.0	150C	DO4
37#	1S6027	10	27	10	100m	8 0	6 0	150	DO4
38#	1S6027A	5	27	10	100m	5 0	6 0	150	DO4
39	10PZ27,A,B,D	xxxx	27	10	95m	7 0	8 5	175	DO4
40	10PZ27C	∅	27	10	95m	7 0	8 5	175	DO4
41	10RZ27,A,B,D	xxxx	27	10	150m	3 0	8 0	155	DO4
42	10RZ27C	∅	27	10	150m	3 0	8 0	155	DO4
43	10Z27T20,10,5	xxx	27	10	70m	15	9 5	165	DO4
44	AV8027	∅2	27	10	150m	4 0		150A	S11
45#	CC4027	5	27	10	15m	18	7 4	150	S19
46#	CD4027	10	27	10	15m	18	7.4	150	S19
47#	GZ27A	10	27	10 ∅	75m	5.6	7 7	150A	DO4
48#	PZ27A	10	27	10 ∅	75m	5 6	7 7	150A	S95a
49	PZT27∅	10	27	10 ∅	8 0m	27	7 4	185	S82
50	UZ7727	5	27	10	90m	6 0	9.0	175	S277∅
51	UZ7827	10	27	10	90m	6 0	9 0	175	S277∅
52	UZ7927	20	27	10	90m	6 0	9 0	175	S277∅
53#	Z5D270CF	20§∅	27	10	50m	5 0	8 5	150J	DO4
54#	ZC5027	5	27	10	100m	5 0	8.1	150A	S19
55#	ZD5027	10	27	10	100m	5.0	8 1	150A	S19
56#	4130	10∅	27	15	150m	2 0		150J	S87
57#	4230	10∅	27	15	150m	2 0		150J	S87
58#	BZY93C27	5	27	20 §	500m	2 0	21	175J	DO4∅
59#	SZ27B	5	27	25	100m	3 0	8 0	150B	S16
60#	ZL27	10	27	25 ∅	25	15	7 0	150J	M41
61#	ZX27	5	27	25 ∅	25	15	7 0	150J	M41
62#	4330	10∅	27	30	150m	2 0		150J	S87
63#	4430	10∅	27	30	150m	2 0		150J	S87
64	1N2822,A,B	xxx	27	50	460m	2.8	8 5	175S	C5a
65	JAN1N2822B,RB	5	27	50	460	2 8	9 0	150C	C5a
66	1N3323	20	27	50	460m	2.8	8.5	175J	DO5
67	1N3323A	10	27	50	460m	2 8	8 5	175J	DO5
68	1N3323B	5	27	50	460m	2.8	8 5	175J	DO5
69	JAN1N3323B,RB	5	27	50	460m	2 8	9.0	150	DO5
70	50T27,A,B	xx*	27	50	460m	2 8	8 5	150C	C5a
71	AV51027	5	27	50	460m	2 8	8 5	150C	C5a
72	75TE27,A	xx	27	75 ∅	370m	13m	1 0	125C	TO36
73#	BZY91C27	5	27	75 §	1	1 0	8 2	175J	DO5∅
74	80TF27,A	xx	27	80	370m	13m	1 0	125C	M117c
75#	4530	10∅	27	100	190m	1 5		150J	S84
76#	4630	10∅	27	100	190m	1 5		150J	S84
77#	ZC727	5	27	100 §	50	5 5	8 4	175J	S125d∅
78	250ZE27	10	27	250 §	7		8.0	190A	S83
79	250ZF27	10	27	250 §	7		8 0	190A	M56a
80	LID27,A	xx	27	400	4.7m	39		150A	M401
81	1N2768	5	27 2		7 5m	80	50	175A	A1jg
82	1N2768A	5	27 2		7 5m	80	.25	175A	A1jg
83	AV9	10	27 5	1 0	15m	29		150A	A19
84	AV109	10	27.5	10	150m	4 0		150A	S11
85	HRE28	5	28		10m	50	50	70A	A126a
86	HRE28A	5	28		10m	50	50	125A	A126a
87	1N769-4	5	28	25	5 0m	150	9 0	150	DO7
88	1N4119	5	28	25	25m	200		200J	DO7
89	1N4712	5	28	25	05m			200A	DO14
90#	1S477	10	28	25	5 0m	250	9 0	150J	DO7
91	JAN1N4119	5	28	400m	250u	200	9 5	175A	A1sx
92	1N5544	20	28	400m§	1 0m			175A	DO7
93	1N5544A	10	28	400m§	1 0m			175A	DO7
94	1N5544B	5	28	400m§	1 0m	100		175A	DO7
95▼	JAN1N5544B	5	28	400m	1 0m	100	9 1	200A	DO14
96	1N5544C	2	28	400m§	1 0m	100		175A	DO7
97	1N5544D	1	28	400m§	1 0m	100		175A	DO7
98	1N5546	20	28	400m§	1 0m			175A	DO7
99	1N5546A	10	28	400m§	1 0m			175A	DO7
100	CZA28D,10,5	xxx	28	40 ∅	250u	200	8 5	175J	M371
101	CZD28D,10,5	xxx	28	.40 ∅	250u	200	8 5	175J	M451
102	MACZA28D,10,5	xxx	28	40 ∅	250u	200	8 5	175J	M453
103	MACZD28D,10,5	xxx	28	.40 ∅	250u	200	8.5	175J	M453
104	MBCZA28D,10,5	xxx	28	.40 ∅	250u	200	8 5	175J	M454
105	MBCZD28D,10,5	xxx	28	40 ∅	250u	200	8 5	175J	M454
106	MCCZA28D,10,5	xxx	28	.40 ∅	250u	200	8.5	175J	M455
107	MCCZD28D,10,5	xxx	28	.40 ∅	250u	200	8 5	175J	M455
108	MDCZA28D,10,5	xxx	28	.40 ∅	250u	200	8 5	150A	M410
109	MDCZD28D,10,5	xxx	28	40 ∅	250u	200	8.5	150A	M410
110	MZC28A10	†	28	400m§	1.8m	120	9 1	175J	M468
111	MZC28B10	§†	28	400m§	250u	200		175J	M468
112	1N5255	20†	28	.50	4 5m			200A	DO7
113	1N5255A,B	§∅	28	.50	4 5m	44	9.1	200A	DO7
114	MZ92-28	†	28	500m§	4.5m		8 4	150J	C103
115	S5255,A,B	xxx	28	500m	4 5m	44	9.1	175	DO41
116	1N2040-4	5	28	.75	5 0m	300	9 0	150J	DO12
117#	1S487	10	28	1 0	20m	200	9 5	150J	A115
118	AV2028	∅2	28	1 0	15m	29		150A	A19
119	EVR28,A,B	xxx	28	1 0	10m	47		175A	DO27
120	VR28,A,B	xx*	28	1.0	4.0m	35	9 0	125C	A1ex
121	2VR28,A,B	xx*	28	2 0	4 0m	42			A3e
122#	1S497	10	28	3.0	40m	150	9.5	150J	S112
123♦	1N5362	20	28	5.0	50m			200A	A1ee
124▼	1N5362A	10	28	5.0	50m	6 0		200A	A1ee
125▼	1N5362B	5	28	5 0	50m	6 0		200A	A1ee
126▼	5ZS28,A,B	xxx	28	5 0 §	50m	6.0		200A	A1ts
127	1N2049-4	5	28	10	150m	8.0	9.0	150J	DO4
128	AV8028	∅2	28	10	150m	4 0		150A	S11
129	AV51028	5	28	50	440m	2 9	8 5	150C	C5a
130	1N231∅	10	28.5	150m	200u			150A	C1
131	1N231A∅	5	28.5	150m	200u			150A	C1
132	1N1319,A	xx	28 5	15	.20m		9.8	150A	C1
133	IDAZ231,A,B,C∅	xxxx	28.5	150m	200u			150A	A1hc
134#	RD29A	10	28.5	.20	2.0m	250	9 5	150S	A1dw
135#	1S764	xxx	28.5	25	2 0m	250	9 5	150	C1d
136	PS6319,A	15x	28.5	.50	.20m				DO14
137#	RD29B	10	28 5	1 0	10m	28	9.5	150S	A164
138#	RD29C	10	28 5	3.0	30m	15	9 5	150S	S42
139#	RD29D	10	28 5	10	100m	5.0	8 0	150S	S103
140	AV2029	∅2	29	1 0	15m	29		150A	A19
141▼#	BZ290	5	29	1.0	10m	33	8 5	175J	A60t
142	AV8029	∅2	29	10	150m	4.0		150A	S11
143	AV51029	5	29	50	430m	3.0	8.5	150C	C5a
144	250ZE29	10	29	250 §	7		8.0	190A	S83
145	250ZF29	10	29	250 §	7		8.0	190A	M56a
146	DSZ3030	10	30		25m	15	9.0		A266
147	1/4A30,A,B	xxx	30	25	2 1m	70	8 5	175	DO7
148	1/4M30Z,10,5	xxx	30	.25	2.1m	70	8 5	175J	A1cy
149	25N30	20	30	25	2 1m	70		250	DO7
150	1N725,A	xx	30	.25	4.0m	42	8 9	175A	DO7
151	1N725B	20	30	.25	4.0m	42			DO7
152	1N4120	5	30	.25	.25m	200		200J	DO7
153	1N4713	5	30	25	.05m			200A	DO14
154#	1130	10∅	30	.25	3 0m	180	9 △	150J	C18f
155#	HS2300	5	30	.25	5.0m			175A	DO7
156#	BZY85C30	5	30	.30	5.0m	80	9 0	150J	DO7
157	MC6025,A	xx	30	.30	1.0m	81		175	A2m
158#	Z1A30	1	30	320m	5 0m	80	10 △	150A	C29
159#	Z1B30	5	30	320m	5.0m	80	10 △	150A	C29
160#	Z1C30	10	30	320m	5.0m	80	10 △	150A	C29
161#	Z1D30	15	30	320m	5.0m	80	10 △	150A	C29
162	1N972,A,B	xxx	30	40	4 2m	49	8 5	175S	DO7
163	JAN1N972B	5	30	.40	4 2m	49	9.1	175A	DO7
164	1N3529	5	30	.40	4.0m	48	10	200A	DO7
165	JAN1N4120	5	30	400m	250u	200	9.5	175A	A1sx
166	1N5545	20	30	400m§	1.0m			175A	DO7
167	1N5545A	10	30	400m§	1 0m			175A	DO7
168	1N5545B	5	30	400m§	1 0m	100		175A	DO7
169▼	JAN1N5545B	5	30	400m	1.0m	100	9 1	200A	DO14
170	1N5545C	2	30	400m§	1.0m	100		175A	DO7
171	1N5545D	1	30	400m§	1 0m	100		175A	DO7
172▼	1N5747B	5	30	400m	2.0m	80	8.6	200J	DO35
173#	1S2300	10	30	400m	5.0m	95	9.0	150A	A1
174#	1S2300A	5	30	400m	5.0m	95	9.0	150A	A1
175#	5531	5	30	.40	5 0m	65	8 5	125A	A1ce
176#	BZX46C30	5	30	400m	4.2m	49	8.5	175J	DO35
177#	BZX55C30	5	30	400m	5 0m	80	8 5	150J	DO35
178#	BZX79C30	5	30	400m	5.0m	80	260	200J	A257
179#	BZX83C30	5	30	400m	5.0m	90	8 5	150J	DO35
180▼#	BZY85B30	2	30	400m	5 0m	80	7 4	150J	DO7
181#	BZY88C30	5	30	.40	5.0m	95		175J	DO7
182#	BZY94C30	5	30	.40				150J	DO7
183	C4027	10	30	40	4 2m	49		175	A134a
184	C6027	10	30	400m	1.0m	90 ∅	8.6	175A	M371c
185	C6027A	5	30	400m	1.0m	90 ∅	8 6	175A	M371c
186	C6127	10	30	400m	1.0m	90	8.6	175A	M131a
187	C6127A	5	30	400m	1.0m	90	8 6	175A	M131a
188	CZA30D,10,5	xxx	30	40 ∅	250u	200	8.5	175J	M371
189	CZB30D,10,5	xxx	30	.40 ∅	2.1m	70	8.5	175J	M371
190	CZC30D,10,5	xxx	30	.40 ∅	4.2m	49	8.5	175J	M371
191	CZD30D,10,5	xxx	30	.40 ∅	250u	200	8.5	175J	M451
192	CZE30D,10,5	xxx	30	40 ∅	4.2m	49	8.5	175J	M451
193	HM30,A,B	xxx	30	400m§	4.2m	49		175A	A196c
194#	HS7300	5	30	40	5.0m			175A	DO7

SYMBOLS AND CODES EXPLAINED IN INTERPRETER

2. SILICON REFERENCE DIODES

IN ORDER OF (1) REF. VOLTAGE, (2) DISSIPATION, and (3) TYPE No.

LINE No.	3 TYPE No	TOLERANCE 1 20 10 5 2 ± (%)	NOM. REF. VOLT. (V)	2 MAX. DISS. @ 25°C (W)	TEST CUR Izt (A)	MAX. DYN. IMP (Ω)	TEMP COEFF Tc	MAX. TEMP (°C)	DWG. No.
1	M4Z30,A,-20	xx*	30	40	4 2m	49		150A	A1kk
2#	M30Z	5.0	30	400m	5 0m	80	8 5	150A	DO7
3	MACZA30D,10,5	xxx	30	40 ∅	250u	200	8 5	175J	M453
4	MACZB30D,10,5	xxx	30	40 ∅	2 1m	70	8 5	175J	M453
5	MACZC30D,10,5	xxx	30	40 ∅	4 2m	49	8 5	175J	M453
6	MACZD30D,10,5	xxx	30	40 ∅	250u	200	8 5	175J	M453
7	MACZE30D,10,5	xxx	30	40 ∅	4 2m	49	8 5	175J	M453
8	MBCZA30D,10,5	xxx	30	40 ∅	250u	200	8 5	175J	M454
9	MBCZB30D,10,5	xxx	30	40 ∅	2 1m	70	8 5	175J	M454
10	MBCZC30D,10,5	xxx	30	40 ∅	4 2m	49	8 5	175J	M454
11	MBCZD30D,10,5	xxx	30	40 ∅	250u	200	8 5	175J	M454
12	MBCZE30D,10,5	xxx	30	40 ∅	4 2m	49	8 5	175J	M454
13	MCCZA30D,10,5	xxx	30	40 ∅	250u	200	8 5	175J	M455
14	MCCZB30D,10,5	xxx	30	40 ∅	2 1m	70	8 5	175J	M455
15	MCCZC30D,10,5	xxx	30	40 ∅	4 2m	49	8 5	175J	M455
16	MCCZD30D,10,5	xxx	30	40 ∅	250u	200	8 5	175J	M455
17	MCCZE30D,10,5	xxx	30	40 ∅	4 2m	49	8 5	175J	M455
18	MDCZA30D,10,5	xxx	30	40 ∅	250u	200	8 5	150A	M410
19	MDCZB30D,10,5	xxx	30	40 ∅	2 1m	70	8 5	150A	M410
20	MDCZC30D,10,5	xxx	30	40 ∅	4 2m	49	8 5	150A	M410
21	MDCZD30D,10,5	xxx	30	40 ∅	250u	200	8 5	150A	M410
22	MDCZE30D,10,5	xxx	30	40 ∅	4 2m	49	8 5	150A	M410
23	MZ500-27	10	30	4 §	4 2m	50 ∅	9 1	175J	DO7
24	MZC30A10	†	30	400m§	1.7m	140	9 1	175J	M468
25	MZC30B10	§†	30	400m§	250u	200		175J	M468
26#	ZF30	5	30	400m	5 0m	80	9 0	150J	DO7
27#	ZP30#	5	30	400m	5 0m	80	9 0	150J	DO7
28	1/2Z30T5	5	30	50	4 2m	39		175	A94f
29	1N3421	10	30	50	1 0m	320	8 2	200A	P5
30	1N5256	20†	30	50	4 2m			200A	DO7
31	1N5256A,B	§∅	30	50	4 2m	49	9 1	200A	DO7
32	MTZ625,A	xx	30	50	1 0m	81		175A	A60e
33	MZ92-30	†	30	500m§	4 2m		8.5	150J	C103
34	S5256,A,B	xxx	30	500m	4 2m	49	9 1	175	DO41
35#	ZSF30	1	30	500m	7 0m	10	1 0	150S	M487a
36#	ZOA30	1	30	520m	5 0m	60	10 △	150J	A1ef
37#	ZOB30	5	30	520m	5 0m	60	10 △	150J	A1ef
38#	ZOC30	10	30	520m	5 0m	60	10 △	150J	A1ef
39#	ZOD30	15	30	520m	5 0m	60	10 △	150J	A1ef
40	1N4643	5	30	60	4 2m	1 0k	9 1	200A	DO14
41#	NTO 6C30	5	30	600m	5 0m	60		125J	M498
42#	UZ30	10	30	60	20m	50	9 5	135A	DO3
43#	ZC030	5	30	60	1 0m	95	8 3	100	A3k
44#	ZD030	10	30	60	1 0m	95	8 3	100	A3k
45#	ZW30	5	30	600m	5.0m	80	9 0	150J	A1bg
46	7JZ30	†	30	750m	4.2m	49	8 5	175	DO15
47	7Z30,A,B,D	xxxx	30	750m	4 2m	49	8 5	175	DO27
48	7Z30C	∅	30	750m	4 2m	49	8 5	175	DO27
49	7ZM30,A,B,D	xxxx	30	750m	4 2m	49	8 5	175	DO41
50	7ZM30C	∅	30	750m	4 2m	49	8 5	175	DO41
51	1N3690	20	30	750m	4.2m	49	8 5	175S	A1az
52	1N3690A	10	30	750m	4.2m	49	8 5	175S	A1az
53	1N3690B	5	30	750m	4.2m	49	8 5	175S	A1az
54	MC6125,A	xx	30	75	5 0m	81		175A	A2d
55	MMZ30,A,-20	xx*	30	75	4 2m	49		150A	A1kk
56	MZ30T20,10,5	xxx	30	75	5 0m	150	9 5	165A	A152
57	1A30M,A,B	xxx	30	1 0	8.5m	40		75A	DO15
58	1E30Z,10,5	xxx	30	1 0	8.5m	40	8 5	150A	A52g
59	1M30Z,10,5	xxx	30	1 0	8 5m	40	8 5	175S	DO1
60	1N1782,A	xx	30	1 0	15m	28		175S	DO13
61	1N2387	10	30	1 0	8 0m	29	2 8 △	200J	A126
62	1N3031,A,B	xxx	30	1 0		40	8 5	175A	A31a
63	JAN1N3031B	5	30	1 0	8.5m	40	9 1	175A	A31c
64	1N4173	20	30	1 0	8 5m	40	8 5	175	DO29
65	1N4173A	10	30	1 0	8 5m	40	8 5	175	DO29
66	1N4173B	5	30	1 0	8.5m	40	8.5	175	DO29
67	1N4338,A,B	xxx	30	1 0	8.5m	40	8 5	300S	DO7
68▼	1N4415	20	30	1 0	8 5m	15		175S	A266a
69	1N4672	5	30	1 0	8 5m	750	9 1	200A	DO15
70	1N4751	10	30	1 0	8 5m	40		200A	A1ay
71	1N4751A	5	30	1 0	8 5m	40		200A	A1ay
72	1N5574	20	30	1 0 §	8 5m			200A	A196d
73	1N5574A	10	30	1 0 §	8 5m	40		200A	A196d
74	1N5574B	5	30	1 0 §	8 5m	40		200A	A196d
75	1N5644		30	1.0	1 0m		9.7m	175A	DO13
76	1N5644A		30	1 0	1 0m		9.7m	175A	DO13
77	1R30,A,B	xxx	30	1 0	8 5m	40	8.5	175A	A52c
78#	1S240	10	30	1 0	12m	30		150J	A56a
79#	1S3030	xx	30	1 0	10m	50	8 5	150	A3
80	1Z30,A,B	xxx	30	1 0	8 5m	40		150	A1ay
81	1Z30T20,10,5	xxx	30	1 0	7 0m	90	9.5	165A	A89c
82#	1ZC30T10,5	xx	30	1 0	7 0m	100	9 5	165A	A31p
83	AV2030	∅2	30	1 0	15m	29		150A	A19
84#	BZX29C30	5	30	1 0	10m	40	8 5	175J	A1cd
85#	BZX61C30	5	30	1 0	10m	40	7 0	175J	A3y
86♦	BZX85C30	5	30	1 0	10m	30	8 8	150A	DO15
87	CD31-00024	5	30	1 0	8 5m	40	10	200A	A1ce
88	CD31-12031	5	30	1 0	8 5m	40		200A	A1ce
89	CD32-12061	5	30	1.0	8.5m	40			
90	CZ30,A,B,D	xxxx	30	1 0	20m	32	8 5	175	DO15
91	CZ30C	∅	30	1 0	20m	32	8 5	175	DO15
92	EVR30,A,B	xxx	30	1 0	9.0m	50		175A	DO27
93	G30T20,10,5	xxx	30	1 0	8 5m	40		175	DO15
94	HW30,A,B	xxx	30	1 0	8 5m	40		175	A196
95	IDA1Z30,A,B,C∅	xxxx	30	1 0	22m			200A	A1ht
96	JZ30,A,B,D	xxxx	30	1.0	8 5m	40	8 5	175	DO15
97	JZ30C	∅	30	1 0	8.5m	40	8 5	175	DO15
98	LPM30,A,-20	xx*	30	1 0	8 5m	40		150A	A1kk
99	TC30A5A	5△∅	30	1 0	10m	50	05	175A	A1ss
100	TZ30,A,B,D	xxxx	30	1 0	20m	32	8 5	175	DO27
101	TZ30C	∅	30	1 0	20m	32	8 5	175	DO27
102	UZ8730	5	30	1 0	8 5m	40	9 0	175	A146h
103	UZ8830	10	30	1 0	8 5m	40	9 0	175	A146h
104	VR30,A,B	xxx	30	1.0	8 5m	40		125A	A1b
105#	Z4A30	1	30	1 0	25m	27	10 △	150J	A1ef
106#	Z4B30	5	30	1 0	25m	27	10 △	150J	A1ef
107#	Z4C30	10	30	1 0	25m	27	10 △	150J	A1ef
108#	Z4D30	15	30	1 0	25m	27	10 △	150J	A1ef
109	Z30,A,B,D	xxxx	30	1 0	8 5m	40	8 5	175	DO27
110	Z30C	∅	30	1 0	8 5m	40	8 5	175	DO27
111	ZA30,A,B	xxx	30	1 0	8 5m	40		150C	A1ew
112	ZB30	†	30	1 0 §	8 5m	40		150A	A1bc
113	ZD30∅,A,B	xxx	30	1 0	8.5m	35	8 5	175A	A1cm
114#	ZEC30	20	30	1 0	7 0m	100	10	165A	DO3
115	ZH30,A,B	xxx	30	1 0	8 5m	40	8 5	175A	DO1
116	ZM30,A,B,D	xxxx	30	1 0	8 5m	40	8.5	175	DO41
117	ZM30C	∅	30	1 0	8 5m	40	8 5	175	DO41
118#	7731	5	30	1 1	20m	25	8 5	125A	A1bu
119#	BZY92C30	5	30	1 1	25m	15	7 0	150J	DO13
120	1N4843,A,B	xxx	30	1 2	8 3m	40	9 1	175	DO29
121#	BZX67C30	5	30	1 3	25m	15	7 0	150J	S287
122#	ZD30#	5	30	1 3	25	15	7 0	150J	DO13
123#	ZY30	5	30	1 3	25	15	7 0	150J	A1bg
124▼	1N3800	20	30	1 5	12m	25	9 1	175S	C14∅
125▼	1N3800A	10	30	1 5	12m	25	9 1	175S	C14∅
126▼	1N3800B	5	30	1 5	12m	25	9 1	175S	C14∅
127	1N4064	5	30	1 5	10m	50	50	100	A1ss
128	1N4064A	5	30	1 5	10m	50	20	100	A1ss
129	1N4476	5	30	1 5	8 5m	20		175A	A196
130	JAN1N4476	10	30	1 5	8 5m	20	9 1	175A	A1v
131#	1S4030,A	xx	30	1 5	10m	21	8 5	150A	DO1
132	1 5DKZ30,A,B	xxx	30	1 5	12m	25		175A	DO27
133	1 5JZ30,A,B,D	xxxx	30	1 5	12m	25	9 1	175	DO15
134	1 5JZ30C	∅	30	1 5	12m	25	9 1	175	DO15
135	1.5R30,A,B	xxx	30	1 5	13m	30	8 5	175A	A52c
136	1 5Z30,A,B,D	xxxx	30	1 5	12m	25	9 1	175	DO27
137	1 5Z30C	∅	30	1 5	12m	25	9 1	175	DO27
138#	BZY95C30	5	30	1 5	20m	22	25	175J	DO1
139	MC6325,A	xx	30	1 5	25m	70			A1q
140	MZ1000-24	10	30	1 5 §	8 5m	60 ∅	9 1	175J	A1ay
141#	SZ30C	5	30	1 5	20m	160	9 0	160A	A26
142#	Z2A30	1	30	1 5	25m	27	9 0 △	150J	A244
143#	Z2B30	5	30	1 5	25m	27	9 0 △	150J	A244
144#	Z2C30	10	30	1 5	25m	27	9 0 △	150J	A244
145#	Z2D30	15	30	1 5	25m	27	9.0 △	150J	A244
146#	Z3A30	1	30	1 5	100m	15	9 0 △	150J	S4f
147#	Z3B30	5	30	1 5	100m	15	9 0 △	150J	S4f
148#	Z3B300CF	20§∅	30	1 5	20m	23	9 5	175J	DO1
149#	Z3C30	10	30	1 5	100m	15	9 0 △	150J	S4f
150#	Z3D30	15	30	1 5	100m	15	9 0 △	150J	S4f
151#	ZC2030	5	30	1 8	1 0m	97	8.3	150	DO3
152#	ZD2030	10	30	1 8	1 0m	97	8 3	150	DO3
153	2R30,A,B	xxx	30	2 0	17m	30	8.5	175A	DO27
154	2VR30,A,B	xxx	30	2 0	17m	30			A3e
155	LMZ30,A,-20	xx*	30	2 0	16m	20		150A	A1kk
156	ZBC30	†	30	2 0 §	17m	15		150A	A1bc
157#	VR30F	5	30	2 2	20m	44		200S	DO3
158	1N5035	10	30	2 5	21m	15	8 5	150	A1gn
159	1N5035A	5	30	2 5	21m	15	8.5	150	A1gn
160#	BZX70C30	5	30	2 5	20m	22	250	150J	A171b
161	1N5077	5	30	3 0	25m	15		175A	A146j
162	3R30,A,B	xxx	30	3 0	27m	20	8 5	175A	A1rw
163	3T30,A,B	xxx	30	3.0	30m	22		175C	A221
164	3TZ30,A,B,D	xxxx	30	3 0	30m	22		175	A1ec
165	3TZ30C	∅	30	3 0	30m	22		175	A1ec
166	3VR30,A,B	xxx	30	3 0	26m	20			A222
167	3Z30,A,B	xxx	30	3 0	24m	20		150	A222
168	CZ5077	10	30	3 0	25m	15	250	175A	A196e
169	M3Z30,A	xx	30	3 0	27m	15		150A	A1kk
170	MZ730	5	30	3 0	25m	15	9.0	175A	A146j
171	MZ830	10	30	3 0	25m	15	9 0	175A	A146j
172	MZ930	20	30	3 0	25m	15	9 0	175A	A146j
173#	NT3C30	5	30	3 0	5 0m	90		125J	S43a
174	UZ730	5	30	3 0	25m	15	9 0	175A	A60
175	UZ830	10	30	3 0	25m	15	9 0	175A	A146f
176	UZ930	20	30	3 0	25m	15	9 0	175A	A60
177	ZAC30,A,B	xxx	30	3 0	8 5m	40		150C	A1ey
178	ZCC30	†	30	3 0 §	25m	15		150A	A1ey
179	3Z30T20,10,5	xxx	30	3 5	25m	45	9 5	165	DO4
180	1N4029,A,B	xxx	30	5 0	42m	8 0	9 1	180A	S82
181	1N4969	5	30	5 0	40m	8 0		175A	A146m
182	JAN1N4969	5	30	5 0	40m	8 0	9 0	175A	A248f
183♦	1N5363	20	30	5 0	40m			200A	A1ee
184▼	1N5363A	10	30	5 0	40m	8 0		200A	A1ee
185▼	1N5363B	5	30	5 0	40m	8 0		200A	A1ee

SYMBOLS AND CODES EXPLAINED IN INTERPRETER

2. SILICON REFERENCE DIODES

IN ORDER OF (1) REF. VOLTAGE, (2) DISSIPATION, and (3) TYPE No.

LINE No.	3 TYPE No.	TOLERANCE 1 (20 10 5 2) ± (%)	NOM. REF VOLT (V)	2 MAX. DISS. @ 25°C (W)	TEST CUR. Izt (A)	MAX. DYN. IMP. (Ω)	TEMP. COEFF Tc	MAX. TEMP (°C)	DWG. No.
1▼	5ZS30,A,B	xxx	30	5 0 §	40m	8.0		200A	A1ts
2#	5331	10∅	30	5 0	20m	25		150J	A9h
3▼	CTZC30,A,B,D∅								
		xxxx	30	5 0 §	40m	8 0 ∅	8.5	175A	A1ey
4▼	CTZC30C∅	1	30	5 0 §	40m	8 0 ∅	8 5	175A	A1ey
5▼	CTZC30E∅	3	30	5.0 §	40m	8 0 ∅	8 5	175A	A1ey
6	DSZ5730	5	30	5 0	40m	8.0	9 0	175A	A60r
7	DSZ5830	10	30	5.0	40m	8.0	9 0	175A	A60r
8	MZ5730	5	30	5.0	40m	8 0	9 0	175A	A60f
9	MZ5830	10	30	5.0	40m	8.0	9 0	175A	A60f
10	MZ5930	20	30	5 0	40m	8 0	9.0	175A	A60f
11▼	TZC30,A,B,D								
		xxxx	30	5 0 §	40m	8.0 ∅	8 5	175A	A1ey
12▼	TZC30C	1	30	5 0 §	40m	8.0 ∅	8.5	175A	A1ey
13▼	TZC30E	3	30	5 0 §	40m	8.0 ∅	8 5	175A	A1ey
14▼	UZ5730	5	30	5 0	40m	8 0	9 0	175A	A146m
15♦	UZ5830	10	30	5 0	40m	8 0	9 0	175A	A146m
16	UZ5930	20	30	5 0	40m	8.0 ∅	9 0	175A	A146m
17	ZC30#	†	30	5.0 §	40m	8.0		150A	A1ey
18#	VR30E	5	30	5 8	20m	44		200S	DO4
19	UZ4730	5	30	8 0	40m	8.0		175A	A146m
20	UZ4830	10	30	8.0	40m	8 0		175A	A146m
21	1N1362,A	xx	30	10	150m	4 0		175A	DO4
22	1N1362B	20	30	10	150m	4 0			S11e
23	1N1362C,CA∅								
		xx	30	10 §	15	4.0		175J	S19a
24	1N1824	10	30	10	250m	4.0	8 0	150A	S19a
25	1N1824A	5	30	10	250m	4.0	8 0	150A	S19a
26	1N1824C,CA∅								
		xx	30	10	250m	4 0	8 0	150A	S19a
27	1N2989,A,B	xxx	30	10	85m	8 0		175C	DO4∅
28	JAN1N2989B,RB								
		5	30	10	85m	8 0	9 1	150C	DO4
29	1N4273	20	30	10	85m	8 0	8 5	175C	S134
30	1N4273A	10	30	10	85m	8 0	8 5	175C	S134
31	1N4273B	5	30	10	85m	8.0	8 5	175C	S134
32	JAN1N4273B	5	30	10 §	85m	8 0	9.1	175S	S134a
33#	1S282	10	30	10	120m	6 0		150J	S19g
34#	1S5030,A	xx	30	10	50m	5 0	8 0	150C	DO4
35#	1S5030C∅	10	30	10	50m	5 0	8 0	150C	DO4
36#	1S6030	10	30	10	100m	8 0	6 0	150	DO4
37#	1S6030A	5	30	10	100m	8 0	6 0	150	DO4
38	10PZ30,A,B,D								
		xxxx	30	10	85m	8 0	8 5	175	DO4
39	10PZ30C	∅	30	10	85m	8 0	8.5	175	DO4
40	10RZ30,A,B,D								
		xxxx	30	10	150m	4.0	8 0	155	DO4
41	10RZ30C	∅	30	10	150m	4 0	8 0	155	DO4
42	10Z30T20,10,5								
		xxx	30	10	70m	20	9 5	165A	DO4
43	AV8030	∅2	30	10	150m	4.0		150A	S11
44#	CC4030	5	30	10	15m	18	7.5	150	S19
45#	CD4030	10	30	10	15m	18	7 5	150	S19
46	UZ7730	5	30	10	80m	8 0	9.0	175	S277∅
47	UZ7830	10	30	10	80m	8 0	9.0	175	S277∅
48	UZ7930	20	30	10	80m	8 0	9 0	175	S277∅
49#	Z5D300CF	20§∅	30	10	50m	8.0	9 0	150J	DO4
50#	ZC5030	5	30	10	100m	8 0	8.2	150A	S19
51#	ZD5030	10	30	10	100m	8.0	8 2	150A	S19
52#	4131	10∅	30	15	150m	3 0		150J	S87
53#	4231	10∅	30	15	150m	3 0		150J	S87
54#	BZY93C30	5	30	20 §	500m	2 5	25	175J	DO4∅
55#	ZX30	5	30	25 ∅	25	15	7.0	150J	M41
56#	4331	10∅	30	30	150m	3 0		150J	S87
57#	4431	10∅	30	30	150m	3 0		150J	S87
58	1N2823,A,B	xxx	30	50	420m	3 0	8 5	175S	C5a
59	JAN1N2823B,RB								
		5	30	50	420m	3 0	9.1	150C	C5a
60	1N3324	20	30	50	420m	3 0	8 5	175J	DO5
61	1N3324A	10	30	50	420m	3 0	8 5	175J	DO5
62	1N3324B	5	30	50	420m	3 0	8 5	175J	DO5
63	JAN1N3324B,RB								
		5	30	50	420m	3 0	9 1	150	DO5
64	50T30,A,B	xx*	30	50	420m	3 0	8.5		S19e
65	AV51030	5	30	50	420m	3 0	8 5	150C	C5a
66#	BZY91C30	5	30	75 §	1	1 1	8 5	175J	DO5∅
67#	4531	10∅	30	100	150m	2 0		150J	S84
68#	4631	10∅	30	100	150m	2 0		150J	S84
69#	ZC730	5	30	100 §	50	6 0	8 6	175J	S125d∅
70	250ZE30	10	30	250 §	7		8.0	190A	S83
71	250ZF30	10	30	250 §	7		8 0	190A	M56a
72	LID30,A	xx	30	400	4.3m	47		150A	M401
73	1N1739	5	31	1 0	7.5m	100	80	150C	A1kb
74	1N1739A	5	31	1.0	7 5m	100	40	150C	A1kb
75	AV2031	∅2	31	1.0	15m	40		150A	A19
76▼#	BZ310	5	31	1 0	10m	36	8 5	175J	A60t
77	AV8031	∅2	31	10	150m	5 0		150A	S11
78	AV51031	5	31	50	410m	3 1	8 5	150C	C5a
79	HRE32	5	32		10m	55	50	70A	A126a
80	HRE32A	5	32		10m	55	50	125A	A126a
81	AV2032	∅2	32	1.0	15m	40		150A	A19
82	EVR32,A,B	xxx	32	1 0	8 0m	55		175A	DO27
83	AV8032	∅2	32	10	150m	5.0		150A	S11
84	AV51032	5	32	50	400m	3 1	8 5	150C	C5a
85	DPZ30-30R	xx†	32 3	300 ∅§	2.8	130m	8 5	175J	S218a
86	DSZ3033	10	33		20m	21	9 0		A266
87	ZTK33	10	33		5m	12	20	127J	TO18
88	1N1992	10	33	150m	200u	300	9 8	150	C1
89	1N1992A	5	33	150m	200u	300	9 8	150	C1
90	1N1992B	1	33	150m	200u	300	9 8	150	C1
91#	Z33∅	5	33	150m	2.0m	520		150A	C18d
92#	ZZ33	10	33	15	5.0m	560		150A	C18d
93	1N1938,A,B	xx1	33	20	20m	300	9 8	150A	A82e
94#	RZ33A	10	33	20	120m	7 5	8 0	125A	DO5
95#	ZS33	1	33	20	2 0m	300		140A	C74
96	1/4A33,A,B	xxx	33	25	1 9m	85	8 5	175	DO7
97	1/4M33Z,10,5								
		xxx	33	250m	1 9m	85	8.6	175J	A1cy
98	25N33	20	33	25	1 9m	85		250	DO7
99	1N726,A	xx	33	25	4 0m	50	9 0	175A	DO7
100	1N726B	20	33	.25	4.0m	50			DO7
101	1N4121	5	33	.25	.25m	200		200J	DO7
102	1N4714	5	33	250m	50u			200A	DO14
103#	1133	10∅	33	.25	15m	33	9.0	150J	C18f
104#	HS2330	5	33	.25	5.0m			175A	DO7
105#	MZ33A	10	33	.25	3 3m	100	8.0	150A	DO7
106#	BZY85C33	5	33	.30	5.0m	80	9.0	150J	DO7
107	MC6026,A	xx	33	300m	1.0m	105		175	A2m
108#	Z1A33	1	33	320m	5.0m	80	10 △	150A	C29
109#	Z1B33	5	33	320m	5.0m	80	10 △	150A	C29
110#	Z1C33	10	33	320m	5.0m	80	10 △	150A	C29
111#	Z1D33	15	33	320m	5 0m	80	10 △	150A	C29
112	1N973,A,B	xxx	33	.40	3.8m	58	8 5	175S	DO7
113	JAN1N973B	5	33	.40	3.8m	58	9.2	175A	DO7
114	1N1965,A,B	xx1	33	40	.20m	300	9.8	150	DO7
115	1N3530	5	33	400m	3.0m	50	10	200A	DO7
116	JAN1N4121	5	33	400m	250u	200	9.5	175A	A1sx
117	1N5546B	5	33	400m§	1.0m	100		175A	DO7
118▼	JAN1N5546B	5	33	400m	1 0m	100	9.2	200A	DO14
119	1N5546C	2	33	400m§	1 0m	100		175A	DO7
120	1N5546D	1	33	400m§	1.0m	100		175A	DO7
121▼	1N5748B	5	33	400m	2 0m	90	8.7	200J	DO35
122#	1S2330	10	33	400m	5.0m	100	9.0	150A	A1
123#	1S2330A	5	33	400m	5 0m	100	9.0	150A	A1
124#	5532	5	33	40	5 0m	65	9.0	125A	A1ce
125#	BZX46C33	5	33	400m	3 8m	58	8.5	175J	DO35
126#	BZX55C33	5	33	400m	5.0m	80	8.5	150J	DO35
127#	BZX79C33	5	33	400m	5 0m	80	290	200J	A257
128#	BZX83C33	5	33	400m	5.0m	90	8 5	150J	DO35
129▼#	BZY85B33	2	33	400m	5 0m	80	7.4	150J	DO7
130#	BZY94C33	5	33	40	5.0m	60 ∅		150J	DO7
131	C4028	10	33	40	3.8m	58		175	A134a
132	C6028	10	33	400m	1.0m	100 ∅	8 7	175A	M371c
133	C6028A	5	33	400m	1.0m	100 ∅	8 7	175A	M371c
134	C6128	10	33	400m	1.0m	100	8 7	175A	M131a
135	C6128A	5	33	400m	1.0m	100	8.7	175A	M131a
136	CZA33D,10,5								
		xxx	33	40 ∅	250u	200	8 5	175J	M371
137	CZB33D,10,5								
		xxx	33	.40 ∅	1 9m	85	8.5	175J	M371
138	CZC33D,10,5								
		xxx	33	.40 ∅	3 8m	58	8.5	175J	M371
139	CZD33D,10,5								
		xxx	33	40 ∅	250u	200	8 5	175J	M451
140	CZE33D,10,5								
		xxx	33	40 ∅	3.8m	58	8.5	175J	M451
141	HM33,A,B	xxx	33	400m§	3.8m	58		175A	A196c
142#	HS7330	5	33	400m	5.0m			175A	DO7
143	M4Z33,A,-20								
		xx*	33	.40	3 8m	58		150A	A1kk
144#	M33Z	5.0	33	400m	5.0m	80	8.5	150A	DO7
145	MACZA33D,10,5								
		xxx	33	40 ∅	250u	200	8 5	175J	M453
146	MACZB33D,10,5								
		xxx	33	40 ∅	1 9m	85	8 5	175J	M453
147	MACZC33D,10,5								
		xxx	33	40 ∅	3.8m	58	8 5	175J	M453
148	MACZD33D,10,5								
		xxx	33	40 ∅	250u	200	8 5	175J	M453
149	MACZE33D,10,5								
		xxx	33	40 ∅	3.8m	58	8 5	175J	M453
150	MBCZA33D,10,5								
		xxx	33	40 ∅	250u	200	8 5	175J	M454
151	MBCZB33D,10,5								
		xxx	33	.40 ∅	1 9m	85	8 5	175J	M454
152	MBCZC33D,10,5								
		xxx	33	40 ∅	3 8m	58	8 5	175J	M454
153	MBCZD33D,10,5								
		xxx	33	.40 ∅	250u	200	8.5	175J	M454
154	MBCZE33D,10,5								
		xxx	33	40 ∅	3 8m	58	8 5	175J	M454
155	MCCZA33D,10,5								
		xxx	33	.40 ∅	250u	200	8.5	175J	M455
156	MCCZB33D,10,5								
		xxx	33	.40 ∅	1 9m	85	8.5	175J	M455
157	MCCZC33D,10,5								
		xxx	33	.40 ∅	3.8m	58	8.5	175J	M455
158	MCCZD33D,10,5								
		xxx	33	.40 ∅	250u	200	8.5	175J	M455
159	MCCZE33D,10,5								
		xxx	33	.40 ∅	3.8m	58	8 5	175J	M455
160	MDCZA33D,10,5								
		xxx	33	40 ∅	250u	200	8.5	150A	M410
161	MDCZB33D,10,5								
		xxx	33	40 ∅	1.9m	85	8 5	150A	M410
162	MDCZC33D,10,5								
		xxx	33	40 ∅	3.8m	58	8 5	150A	M410
163	MDCZD33D,10,5								
		xxx	33	40 ∅	250u	200	8 5	150A	M410
164	MDCZE33D,10,5								
		xxx	33	40 ∅	3.8m	58	8.5	150A	M410
165	MZ500-28	10	33	4 §	3 8m	60 ∅	9 2	175J	DO7
166	MZC33A10	†	33	400m§	1.5m	170	9.2	175J	M468
167	MZC33B10	§†	33	400m§	250u	200		175J	M468
168#	ZF33	5	33	400m	5 0m	80	9.0	150J	DO7
169#	ZG33	10	33	400m	5.0m	100	9 0	150J	DO7
170#	ZP33#	5	33	400m	5 0m	80	9 0	150J	DO7
171	1/2Z33T5	5	33	50	3 8m	46		175	A94f
172	1N3408∅	10	33	.50	3 0m	80	6 8	200A	P5
173	1N3422	10	33	.50	1 0m	360	8 0	200A	P5
174	1N5257	20†	33	.50	3.8m			200A	DO7
175	1N5257A,B	§∅	33	50	3 8m	58	9 2	200A	DO7
176#	DZ33A	10	33	50	6 2m	75	8 0	150A	A100
177	IDAZ3408,A,B,C∅								
		xxxx	33	500m	3.0m	80	6 8	200A	A1hc
178	MTZ626,A	xx	33	50	1 0m	105		175A	A60e
179	MZ92-33	†	33	500m§	3.8m		8 6	150J	C103
180	S5257,A,B	xxx	33	500m	3.8m	58	9 2	175	DO41
181#	ZSF33	1	33	500m	7 0m	10	1 0	150S	M487a
182#	ZOA33	1	33	520m	5.0m	70	10 △	150J	A1ef

SYMBOLS AND CODES EXPLAINED IN INTERPRETER

2. SILICON REFERENCE DIODES

IN ORDER OF (1) REF. VOLTAGE, (2) DISSIPATION, and (3) TYPE No.

LINE No.	3 TYPE No.	TOLERANCE 20 10 5 2 ± (%)	NOM REF. VOLT. (V)	2 MAX. DISS @ 25°C (W)	TEST CUR Izt (A)	MAX. DYN. IMP (Ω)	TEMP. COEFF Tc	MAX. TEMP (°C)	DWG. No.
1#	Z0B33	5	33	520m	5 0m	70	10 △	150J	A1ef
2#	Z0C33	10	33	520m	5 0m	70	10 △	150J	A1ef
3#	Z0D33	15	33	520m	5 0m	70	10 △	150J	A1ef
4	1N4644	5	33	60	3 8m	1.0k	9 2	200A	DO14
5#	NT0.6C33	5	33	600m	5.0m	60		125J	M498
6#	UZ33	10	33	60	18m	50	10	135A	DO3
7#	ZC033	5	33	.60	1 0m	105	8 5	100	A3k
8#	ZD033	10	33	60	1 0m	105	8 5	100	A3k
9#	ZW33	5	33	600m	5 0m	80	9 0	150J	A1bg
10	7JZ33	†	33	750m	3 8m	58	8 5	175	DO15
11	7Z33,A,B,D	xxxx	33	750m	3 8m	58	8 5	175	DO27
12	7Z33C	∅	33	750m	3.8m	58	8 5	175	DO27
13	.7ZM33,A,B,D	xxxx	33	750m	3 8m	58	8 5	175	DO41
14	7ZM33C	∅	33	750m	3.8m	58	8 5	175	DO41
15	1N3691	20	33	750m	3 8m	58	8 5	175S	A1az
16	1N3691A	10	33	750m	3 8m	58	8 5	175S	A1az
17	1N3691B	5	33	750m	3 8m	58	8 5	175S	A1az
18	MC6126,A	xx	33	75	5 0m	105		175A	A2d
19	MMZ33,A,-20	xx*	33	75	3 8m	58		150A	A1kk
20	1A33M,A,B	xxx	33	1.0	7 5m	45		75A	DO15
21	1E33Z,10,5	xxx	33	1.0	7 5m	45	8 5	150A	A52g
22	1M33Z,10,5	xxx	33	1 0	7.5m	45	8 5	175S	DO1
23	1N1783,A	xx	33	1 0	15m	33		175S	DO13
24	1N1882	10	33	1 0	8 0m	30	6 8	200C	A126
25	1N1882A	5	33	1 0	8 0m	30	6 8	200C	A126
26	1N1882B	1	33	1 0	8 0m	24 △	6 8	175A	DO13
27	1N3032,A,B	xxx	33	1 0	7 5m	45		175A	A31a
28	JAN1N3032B	5	33	1 0	7 5m	45	9.2	175A	A31c
29	1N4174	20	33	1 0	7 5m	45	8 5	175	DO29
30	1N4174A	10	33	1 0	7 5m	45	8 5	175	DO29
31	1N4174B	5	33	1 0	7 5m	45	8 5	175	DO29
32	1N4339,A,B	xxx	33	1 0	7 5m	45	8.5	300S	DO7
33♦	1N4416	20	33	1 0	7.5m	17		175S	A266a
34	1N4416A	10	33	1.0	7 5m	17	8 5	175A	A1cm
35	1N4416B	5	33	1 0	7 5m	17	8 5	175A	A1cm
36	1N4673	5	33	1 0	7 5m	750	9 2	200A	DO15
37	1N4752	10	33	1 0	7 5m	45		200A	A1ay
38	1N4752A	5	33	1 0	7 5m	45		200A	A1ay
39	1N5575	20	33	1 0 §	7 5m			200A	A196d
40	1N5575A	10	33	1 0 §	7.5m	45		200A	A196d
41	1N5575B	5	33	1 0 §	7 5m	45		200A	A196d
42	1N5645		33	1 0	1 0m		9.8m	175A	DO13
43	1N5645A		33	1 0	1 0m		9 8m	175A	DO13
44	1R33,A,B	xxx	33	1 0	7 5m	45	8.5	175A	A52c
45#	1S241	10	33	1 0	10m	40		150J	A56a
46#	1S3033	xx	33	1 0	10m	60	8 5	150	A3
47	1Z33,A,B	xxx	33	1 0	7.5m	45		150	A1ay
48#	1Z33T10,5	xx	33	1 §	7 0m	100	9 5	165A	DO3
49	AV10	10	33	1 0	15m	40		150A	A19
50	AV2033	∅2	33	1 0	15m	40		150A	A19
51#	BZX29C33	5	33	1 0	5 0m	45	8.5	175J	A1cd
52#	BZX61C33	5	33	1 0	10m	45	7 0	175J	A3y
53♦	BZX85C33	5	33	1 0	10m	35	8 8	150A	DO15
54	CD31-00025	5	33	1 0	7 5m	45	10	200A	A1ce
55	CD31-12032	5	33	1 0	7 5m	45		200A	A1ce
56	CD32-12062	5	33	1 0	7 5m	45			
57	CZ33,A,B,D	xxxx	33	1.0	10m	55	8 5	175	DO15
58	CZ33C	∅	33	1 0	10m	55	8 5	175	DO15
59#	EZ33A	10	33	1 0	12m	1 0k	8 0		A1em
60▼	HEP609-RT	5	33	1 0	7.5	45			DO41
61	HW33,A,B	xxx	33	1 0	7 5m	45		175	A196
62	JZ33,A,B,D	xxxx	33	1 0	7 5m	45	8 5	175	DO15
63	JZ33C	∅	33	1 0	7 5m	45	8 5	175	DO15
64	LPM33,A,-20	xx*	33	1 0	7 5m	45		150A	A1kk
65	LPZT33∅	10	33	1 0	8 0m	30	7 8	185	A86
66	TC33A5A	5△∅	33	1 0	10m	55	05	175A	A1ss
67	TZ33,A,B,D	xxxx	33	1 0	10m	55	8 5	175	DO27
68	TZ33C	∅	33	1 0	10m	55	8 5	175	DO27
69	UZ8733	5	33	1 0	7 5m	45	9 0	175	A146h
70	UZ8833	10	33	1 0	7 5m	45	9 0	175	A146h
71	VR33,A,B	xxx	33	1.0	7 5m	45		125A	A1b
72#	Z4A33	1	33	1 0	25m	30	10 △	150J	A1ef
73#	Z4B33	5	33	1 0	25m	30	10 △	150J	A1ef
74#	Z4C33	10	33	1 0	25m	30	10 △	150J	A1ef
75#	Z4D33	15	33	1 0	25m	30	10 △	150J	A1ef
76	Z33,A,B,D	xxxx	33	1 0	7 5m	50	8 5	175	DO27
77	Z33C	∅	33	1 0	7 5m	50	8 5	175	DO27
78	ZA33,A,B	xxx	33	1 0	7 5m	45		150C	A1ew
79	ZB33	†	33	1 0 §	7 5m	45		150A	A1bc
80	ZD33∅,A,B	xxx	33	1 0	7 5m	40	8.5	175A	A1cm
81#	ZF33A	10	33	1 0	12m	38	8 0	150A	DO13
82	ZH33,A,B	xxx	33	1 0	7 5m	45	8 5	175A	DO1
83	ZM33,A,B,D	xxxx	33	1 0	7 5m	45	8.5	175	DO41
84	ZM33C	∅	33	1 0	7.5m	45	8 5	175	DO41
85#	7732	5	33	1 1	20m	25	9 0	125A	A1bu
86#	BZY92C33	5	33	1.1	25m	15	7 0	150J	DO13
87	1N4844,A,B	xxx	33	1 2	7 5m	45	9 2	175	DO29
88#	BZX67C33	5	33	1 3	25m	15	7 0	150J	S287
89#	ZD33#	5	33	1 3	25	15	7 0	150J	DO13
90	ZM33∅	10	33	1 3	25	15	7 0	150J	DO13
91#	ZU33	10	33	1 3	25	15	7 0	150J	A1bg
92#	ZY33	5	33	1 3	25	15	7 0	150J	A1bg
93▼	1N3801	20	33	1 5	11m	30	9 2	175S	C14∅
94▼	1N3801A	10	33	1 5	11m	30	9 2	175S	C14∅
95▼	1N3801B	5	33	1 5	11m	30	9 2	175S	C14∅
96	1N4065	5	33	1 5	10m	55	50	100	A1ss
97	1N4065A	5	33	1 5	10m	55	.20	100	A1ss
98	1N4477	5	33	1 5	7 5m	25		175A	A196
99	JAN1N4477	10	33	1 5	7 5m	25	9 2	175A	A1v
100#	1S4033,A	xx	33	1 5	10m	24	8 5	150A	DO1
101	1 5DKZ33,A,B	xxx	33	1 5	11m	30		175A	DO27
102	1 5JZ33,A,B,D	xxxx	33	1 5	11m	30	9 2	175	DO15
103	1 5JZ33C	∅	33	1 5	11m	30	9 2	175	DO15
104	1 5R33,A,B	xxx	33	1 5	11m	40	8 5	175A	A52c
105	1 5Z33,A,B,D	xxxx	33	1 5	11m	30	9 2	175	DO27
106	1.5Z33C	∅	33	1.5	11m	30	9.2	175	DO27
107#	BZY95C33	5	33	1.5	20m	25	30	175J	DO1
108	MC6326,A	xx	33	1.5	25m	90			A1q
109	MZ1000-25	10	33	1 5 §	7 5m	68 ∅	9 2	175J	A1ay
110#	SZ33C	5	33	1 5	20m	150	9.0	160A	A26
111#	Z2A33	1	33	1 5	25m	30	9 0 △	150J	A244
112#	Z2B33	5	33	1.5	25m	30	9.0 △	150J	A244
113#	Z2C33	10	33	1.5	25m	30	9 0 △	150J	A244
114#	Z2D33	15	33	1 5	25m	30	9 0 △	150J	A244
115#	Z3A33	1	33	1 5	100m	15	9.0 △	150J	S4f
116#	Z3B33	5	33	1 5	100m	15	9 0 △	150J	S4f
117#	Z3B330CF	20§∅	33	1 5	20m	28	10	175J	DO1
118#	Z3C33	10	33	1 5	100m	15	9.0 △	150J	S4f
119#	Z3D33	15	33	1.5	100m	15	9 0 △	150J	S4f
120#	ZC2033	5	33	1 8	1.0m	105	8.5	150	DO3
121#	ZD2033	10	33	1 8	1 0m	105	8 5	150	DO3
122	2R33,A,B	xxx	33	2.0	15m	40	8 5	175A	DO27
123	2VR33,A,B	xxx	33	2.0	15m	40			A3e
124	LMZ33,A,-20	xx*	33	2.0	15m	23		150A	A1kk
125	ZBC33	†	33	2.0 §	15m	21		150A	A1bc
126	1N5036	10	33	2.5	19m	18	8 5	150	A1gn
127	1N5036A	5	33	2.5	19m	18	8.5	150	A1gn
128#	BZX70C33	5	33	2 5	20m	25	30	150J	A171b
129	1N4503	10	33	3 0	20m	21		175S	A146f
130	1N5078	5	33	3 0	20m	21		175A	A146j
131	3R33,A,B	xxx	33	3 0	23m	22	8 5	175A	A1rw
132	3TZ33,A,B,D	xxxx	33	3 0	30m	22		175	A1ec
133	3TZ33C	∅	33	3 0	30m	22		175	A1ec
134	3VR33,A,B	xxx	33	3.0	22m	22			A222
135	3Z33,A,B	xxx	33	3 0	22m	21		150	A222
136#	3Z33T10,5	xx	33	3 0	100m	60	9 8	165C	DO4
137	CZ5078	10	33	3 0	20m	21	270	175A	A196e
138#	FDZ33A	10	33	3 0 ∅	35m	13	8 0	150A	S303
139	M3Z33,A	xx	33	3 0	24m	20		150A	A1kk
140	MZ733	5	33	3.0	20m	21	9 0	175A	A146j
141	MZ833	10	33	3 0	20m	21	9 0	175A	A146j
142	MZ933	20	33	3 0	20m	21	9 0	175A	A146j
143#	NT3C33	5	33	3.0	5 0m	90		125J	S43a
144	UZ733	5	33	3 0	20m	21	9 0	175A	A146f
145	UZ833	10	33	3.0	20m	21	9.0	175A	A146f
146	UZ933	20	33	3 0	20m	21	9.0	175A	A146f
147	ZAC33,A,B	xxx	33	3 0	7.5m	45		150C	A1ey
148	ZCC33	†	33	3 0 §	20m	21		150A	A1ey
149	3T33,A,B	xx*	33	3 5	15m	33			DO4
150#	4GZ33A	10	33	4.0	75m	300	8 5		S19q
151	1N4030,A,B	xxx	33	5.0	38m	10	9 2	180A	S82
152	1N4970	5	33	5 0	40m	10		175A	A146m
153	JAN1N4970	5	33	5 0	40m	10	9.5	175A	A248f
154♦	1N5364	20	33	5 0	40m			200A	A1ee
155▼	1N5364A	10	33	5 0	40m	10		200A	A1ee
156▼	1N5364B	5	33	5 0	40m	10		200A	A1ee
157▼	5ZS33,A,B	xxx	33	5 0 §	40m	10		200A	A1ts
158#	5332	10∅	33	5.0	20m	25		150J	A9h
159▼	CTZC33,A,B,D∅	xxxx	33	5 0 §	40m	10 ∅	8 5	175A	A1ey
160▼	CTZC33C∅	1	33	5 0 §	40m	10 ∅	8 5	175A	A1ey
161▼	CTZC33E∅	3	33	5.0 §	40m	10 ∅	8 5	175A	A1ey
162	DSZ5733	5	33	5 0	40m	10	9 0	175A	A60r
163	DSZ5833	10	33	5 0	40m	10	9 0	175A	A60r
164	HZ33	10	33	5 0	30m	35	3 0	165C	M221
165	MZ5733	5	33	5 0	40m	10	9.0	175A	A60f
166	MZ5833	10	33	5 0	40m	10	9 0	175A	A60f
167	MZ5933	20	33	5 0	40m	10	9.0	175A	A60f
168▼	TZC33,A,B,D	xxxx	33	5 0 §	40m	10 ∅	8 5	175A	A1ey
169▼	TZC33C	1	33	5 0 §	40m	10 ∅	8 5	175A	A1ey
170▼	TZC33E	3	33	5 0 §	40m	10 ∅	8 5	175A	A1ey
171▼	UZ5733	5	33	5 0	40m	10	9 5	175A	A146m
172♦	UZ5833	10	33	5 0	40m	10	9 5	175A	A146m
173	UZ5933	20	33	5 0	40m	10 ∅	9.0	175A	A146m
174	ZC33	†	33	5 0 §	40m	10		150A	A1ey
175#	KR54	10	33	8 0	50m	5 0	9 7	150A	S186
176	UZ4733	5	33	8 0	40m	10		175A	A146m
177	UZ4833	10	33	8 0	40m	10		175A	A146m
178	1N1363,A	xx	33	10	150m	4 0		175A	DO4
179	1N1363B	20	33	10	150m	4 0			S11e
180	1N1363C,CA∅	xx	33	10 §	.15	4 0		175J	S19a
181	1N1825	10	33	10	150m	4.0	8 0	150A	S19a
182	1N1825A	5	33	10	150m	4.0	8.0	150A	S19a
183	1N1825C,CA∅	xx	33	10	150m	4.0	8 0	150A	S19a
184	1N1898	10	33	10	8.0m	30	6 8	200A	S82
185	1N1898A	5	33	10	8 0m	30	6 8	200A	S82
186	1N2990,A,B	xxx	33	10	75m	9 0		175C	DO4∅
187	JAN1N2990B,RB	5	33	10	75m	9 0	9.2	150C	DO4
188	1N4274	20	33	10	75m	9.0	8 5	175C	S134
189	1N4274A	10	33	10	75m	9 0	8 5	175C	S134
190	1N4274B	5	33	10	75m	9 0	8 5	175C	S134
191	JAN1N4274B	5	33	10 §	75m	9.0	9 2	175S	S134a
192#	1S283	10	33	10	100m	7 0		150J	S19g
193#	1S5033,A	xx	33	10	50m	8 0	8 0	150C	DO4
194#	1S5033C∅	10	33	10	50m	8.0	8 0	150C	DO4
195#	1S6033	10	33	10	50m	8.0	6 0	150	DO4
196#	1S6033A	5	33	10	50m	8 0	6 0	150	DO4
197	1OPZ33,A,B,D	xxxx	33	10	75m	9.0	8.5	175	DO4
198	1OPZ33C	∅	33	10	75m	9 0	8 5	175	DO4
199	1ORZ33,A,B,D	xxxx	33	10	150m	4.0	8 0	155	DO4
200	1ORZ33C	∅	33	10	150m	4.0	8 0	155	DO4
201#	1OZ33T10,5	xx	33	10	300m	27	9.8	165C	DO4
202	AV110	10	33	10	150m	5 0		150A	S11
203	AV8033	∅2	33	10	150m	5 0		150A	S11
204#	CC4033	5	33	10	15m	18	7 6	150	S19

SYMBOLS AND CODES EXPLAINED IN INTERPRETER

2. SILICON REFERENCE DIODES

IN ORDER OF (1) REF. VOLTAGE, (2) DISSIPATION, and (3) TYPE No.

LINE No	3 TYPE No.	TOLERANCE 1 20 10 5 2 ± (%)	NOM REF VOLT (V)	2 MAX. DISS. @ 25°C (W)	TEST CUR Izt (A)	MAX. DYN. IMP (Ω)	TEMP. COEFF Tc	MAX TEMP (°C)	DWG. No.
1#	CD4033	10	33	10	15m	18	7 6	150	S19
2#	GZ33A	10	33	10 ∅	62m	7 5	8 0	150A	DO4
3#	PZ33A	10	33	10 ∅	62m	7 5	8 0	150A	S95a
4	PZT33∅	10	33	10 ∅	8 0m	30	7 8	185	S82
5	UZ7733	5	33	10	70m	10	9 0	175	S277∅
6	UZ7833	10	33	10	70m	10	9.0	175	S277∅
7	UZ7933	20	33	10	70m	10	9 0	175	S277∅
8#	Z5D330CF	20§∅	33	10	50m	8 0	9 0	150J	DO4
9#	ZC5033	5	33	10	50m	8.0	8 3	150A	S19
10#	ZD5033	10	33	10	50m	8.0	8 3	150A	S19
11#	4132	10∅	33	15	150m	3.0		150J	S87
12#	4232	10∅	33	15	150m	3 0		150J	S87
13#	BZY93C33	5	33	20 §	500m	3 0	30	175J	DO4∅
14#	SZ33B	5	33	25	100m	4 0	8.0	150B	S16
15#	ZL33	10	33	25 ∅	25	15	7 0	150J	M41
16#	ZX33	5	33	25 ∅	25	15	7 0	150J	M41
17#	4332	10∅	33	30	150m	3 0		150J	S87
18#	4432	10∅	33	30	150m	3 0		150J	S87
19	1N2824,A,B	xxx	33	50	380m	3 2	8 5	175S	C5a
20	JAN1N2824B,RB	5	33	50	380m	3 2	9.2	150C	C5a
21	1N3325	20	33	50	380m	3.2	8 5	175J	DO5
22	1N3325A	10	33	50	380m	3.2	8 5	175J	DO5
23	1N3325B	5	33	50	380m	3 2	8 5	175J	DO5
24	JAN1N3325B,RB	5	33	50	380m	3 2	9 2	150	DO5
25	50T33,A,B	xx*	33	50	380m	3.2	8 5		S19e
26	AV51033	5	33	50	380m	3 2	8 5	150C	C5a
27	75TE33,A	xx	33	75 ∅	300m	10m	1 0	125C	TO36
28#	BZY91C33	5	33	75 §	1	1 2	8 8	175J	DO5∅
29	80TF33,A	xx	33	80	300m	10m	1 0	125C	M117c
30#	4532	10∅	33	100	150m	2.0		150J	S84
31#	4632	10∅	33	100	150m	2 0		150J	S84
32#	ZC733	5	33	100 §	50	6 5	8 7	175J	S125d∅
33	LID33,A	xx	33	400	3 9m	56		150A	M401
34	PS1504	5	33 6	25	10m	60	20	150A	A1gc
35	PS1504A	5	33 6	25	10m	60	10	150A	A1gc
36	1N2769	5	34		7 5m	100	50	175A	A1jh
37	1N2769A	5	34		7 5m	100	25	175A	A1jh
38	AV2034	∅2	34	1 0	15m	40		150A	A19
39	IDA1Z34,A,B,C∅	xxxx	34	1 0	21m			200A	A1ht
40	1 5JZ39,A,B,D	xxxx	34	1 5	10m	40	9 4	175	DO15
41	AV8034	∅2	34	10	150m	5 0		150A	S11
42	AV51034	5	34	50	370m	3.3	8 5	150C	C5a
43	HRE34.5	5	34.5		10m	60	50	70A	A126a
44	HRE34 5A	5	34 5		10m	60	50	125A	A126a
45	1N232∅	10	34 5	150m	200u			150A	C1
46	1N232A∅	5	34.5	150m	200u			150A	C1
47	1N1320,A	xx	34 5	15	20m		11	150A	C1
48	IDAZ232,A,B,C∅	xxxx	34 5	150m	200u			150A	A1hc
49#	1S765	xxx	34.5	25	2 0m	300	10	150	C1d
50	PS6320,A	15x	34.5	50	20m				DO14
51#	Z35∅	10	35	150m	5.0m	520		150A	C18d
52	AV2035	∅2	35	1 0	15m	40		150A	A19
53#	RD35B	10	35	1 0	10m	35	10	150S	A164
54	3R35,A,B	xxx	35	3 0	23m	22	8.5	175A	A1rw
55#	RD35C	10	35	3.0	30m	20	10	150S	S42
56	AV8035	∅2	35	10	150m	5.0		150A	S11
57#	RD35D	10	35	10	100m	7.0	8 0	150S	S103
58	AV51035	5	35	50	360m	3.4	8.5	150C	C5a
59	DPZ30-33R	xx†	35 5	300 ∅§	2 5	140m	8 5	175J	S218a
60	DSZ3036	10	36		20m	21	9.0		A266
61#	RD35A	10	36	20	2 0m	300	10	150S	A1dw
62	1/4A36,A,B	xxx	36	25	1 7m	100	9.0	175	DO7
63	1/4M36Z,10,5	xxx	36	250m	1 7m	100	8 7	175J	A1cy
64	25N36	20	36	25	1 7m	100		250	DO7
65	1N727,A	xx	36	25	4 0m	60	9 1	175A	DO7
66	1N727B	20	36	25	4 0m	60			DO7
67	1N4122	5	36	25	25m	200		200J	DO7
68	1N4715	5	36	.25	05m			200A	DO14
69#	1S478	10	36	25	2 0m	300	9 5	150J	DO7
70	MC6027,A	xx	36	30	1 0m	122		175	A2m
71	1N974,A,B	xxx	36	40	3 4m	70	8.5	175S	DO7
72	JAN1N974B	5	36	40	3 4m	70	9 3	175A	DO7
73	1N3531	5	36	40	3.0m	75	10	200A	DO7
74	JAN1N4122	5	36	400m	250u	200	9 5	175A	A1sx
75▼	1N5749B	5	36	400m	2 0m	90	8.6	200J	DO35
76#	5533	5	36	40	5 0m	75	9.0	125A	A1ce
77#	BZX79C36	5	36	400m	5.0m	90	310	200J	A257
78#	BZY94C36	5	36	.40				150J	DO7
79	C4029	10	36	40	3 4m	70		175	A134a
80	C6029	10	36	400m	1 0m	110 ∅	8 8	175A	M371c
81	C6029A	5	36	400m	1.0m	110 ∅	8 8	175A	M371c
82	C6129	10	36	400m	1 0m	110	8.8	175A	M131a
83	C6129A	5	36	400m	1 0m	110	8.8	175A	M131a
84	CZA36D,10,5	xxx	36	.40 ∅	250u	200	8.5	175J	M371
85	CZB36D,10,5	xxx	36	40 ∅	1 7m	100	8 5	175J	M371
86	CZC36D,10,5	xxx	36	40 ∅	3.4m	70	8.5	175J	M371
87	CZD36D,10,5	xxx	36	.40 ∅	250u	200	8 5	175J	M451
88	CZE36D,10,5	xxx	36	40 ∅	3 4m	70	8.5	175J	M451
89	HM36,A,B	xxx	36	400m§	3 4m	70		175A	A196c
90	M4Z36,A,-20	xx*	36	40	3 4m	70		150A	A1kk
91	MACZA36D,10,5	xxx	36	40 ∅	250u	200	8 5	175J	M453
92	MACZB36D,10,5	xxx	36	40 ∅	1.7m	100	8 5	175J	M453
93	MACZC36D,10,5	xxx	36	.40 ∅	3.4m	70	8 5	175J	M453
94	MACZD36D,10,5	xxx	36	.40 ∅	250u	200	8 5	175J	M453
95	MACZE36D,10,5	xxx	36	40 ∅	3 4m	70	8.5	175J	M453
96	MBCZA36D,10,5	xxx	36	.40 ∅	250u	200	8 5	175J	M454
97	MBCZB36D,10,5	xxx	36	.40 ∅	1 7m	100	8.5	175J	M454
98	MBCZC36D,10,5	xxx	36	40 ∅	3.4m	70	8 5	175J	M454
99	MBCZD36D,10,5	xxx	36	400m∅	250u	200	8.5	175J	M454
100	MBCZE36D,10,5	xxx	36	.40 ∅	3 4m	70	8.5	175J	M454
101	MCCZA36D,10,5	xxx	36	.40 ∅	250u	200	8.5	175J	M455
102	MCCZB36D,10,5	xxx	36	.40 ∅	1.7m	100	8.5	175J	M455
103	MCCZC36D,10,5	xxx	36	.40 ∅	3.4m	70	8.5	175J	M455
104	MCCZD36D,10,5	xxx	36	40 ∅	250u	200	8 5	175J	M455
105	MCCZE36D,10,5	xxx	36	.40 ∅	3.4m	70	8 5	175J	M455
106	MDCZA36D,10,5	xxx	36	.40 ∅	250u	200	8.5	150A	M410
107	MDCZB36D,10,5	xxx	36	.40 ∅	1.7m	100	8.5	150A	M410
108	MDCZC36D,10,5	xxx	36	.40 ∅	3.4m	70	8.5	150A	M410
109	MDCZD36D,10,5	xxx	36	.40 ∅	250u	200	8 5	150A	M410
110	MDCZE36D,10,5	xxx	36	.40 ∅	3 4m	70	8.5	150A	M410
111	MZ500-29	10	36	.4 §	3.4m	70 ∅	9.3	175J	DO7
112	MZC36A10	†	36	400m§	1.4m	200	9.3	175J	M468
113	MZC36B10	§†	36	400m§	250u	200		175J	M468
114	1/2Z36T5	5	36	.50	3.4m	56		175	A94f
115	1N5258	20†	36	.50	3.4m			200A	DO7
116	1N5258A,B	§∅	36	.50	3.4m	70	9.3	200A	DO7
117	MTZ627,A	xx	36	50	1.0m	122		175A	A60e
118	MZ92-36	†	36	500m§	3.4m		8.7	150J	C103
119	S5258,A,B	xxx	36	500m	3.4m	70	9.3	175	DO41
120#	ZSF36	1	36	500m	7.0m	10	1.0	150S	M487a
121	1N4645	5	36	60	3.4m	1.0k	9.3	200A	DO14
122#	NTO 6C36	5	36	600m	5.0m	75		125J	M498
123	7JZ36	†	36	750m	3 4m	70	8.5	175	DO15
124	.7Z36,A,B,D	xxxx	36	750m	3.4m	70	8.5	175	DO27
125	.7Z36C	∅	36	750m	3.4m	70	8.5	175	DO27
126	7ZM36,A,B,D	xxxx	36	750m	3.4m	70	8 5	175	DO41
127	7ZM36C	∅	36	750m	3.4m	70	8.5	175	DO41
128	1N3692	20	36	750m	3.4m	70	8 5	175S	A1az
129	1N3692A	10	36	750m	3.4m	70	8.5	175S	A1az
130	1N3692B	5	36	750m	3.4m	70	8.5	175S	A1az
131	MC6127,A	xx	36	75	5.0m	122		175A	A2d
132	MMZ36,A,-20	xx*	36	75	3.4m	70		150A	A1kk
133	1A36M,A,B	xxx	36	1 0	7.0m	50		75A	DO15
134	1E36Z,10,5	xxx	36	1.0	7 0m	50	8 5	150A	A52g
135	1M36Z,10,5	xxx	36	1.0	7.0m	50	8.5	175S	DO1
136	1N1784,A	xx	36	1.0	15m	39		175S	DO13
137	1N3033,A,B	xxx	36	1.0	7.0m	50		175A	A31a
138	JAN1N3033B	5	36	1.0	7.0m	50	9.3	175A	A31c
139	1N4175	20	36	1.0	7.0m	50	8.5	175	DO29
140	1N4175A	10	36	1 0	7.0m	50	8 5	175	DO29
141	1N4175B	5	36	1.0	7 0m	50	8.5	175	DO29
142	1N4340,A,B	xxx	36	1 0	7.0m	50	8.5	300S	DO7
143♦	1N4417	20	36	1 0	7.0m	19		175S	A266a
144	1N4417A	10	36	1.0	7.0m	19	8.5	175A	A1cm
145	1N4417B	5	36	1 0	7.0m	19	8.5	175A	A1cm
146	1N4674	5	36	1 0	7.0m	750	9.3	200A	DO15
147	1N4753	10	36	1 0	7.0m	50		200A	A1ay
148	1N4753A	5	36	1 0	7.0m	50		200A	A1ay
149	1N5576	20	36	1 0 §	7 0m			200A	A196d
150	1N5576A	10	36	1 0 §	7.0m	50		200A	A196d
151	1N5576B	5	36	1 0 §	7.0m	50		200A	A196d
152	1N5646		36	1 0	1.0m		9 9m	175A	DO13
153	1N5646A		36	1 0	1 0m		9.9m	175A	DO13
154	1R36,A,B	xxx	36	1.0	7 0m	50	8 5	175	A52c
155#	1S242	10	36	1.0	10m	40		150J	A56a
156#	1S488	10	36	1 0	10m	250	10	150J	A115
157#	1S3036	xx	36	1 0	10m	80	8.5	150	A3
158	1Z36,A,B	xxx	36	1 0	7 0m	50		150	A1ay
159	AV2036	∅2	36	1 0	15m	40		150A	A19
160#	BZX29C36	5	36	1 0	5.0m	50	8.5	175J	A1cd
161#	BZX61C36	5	36	1.0	10m	50	7 0	175J	A3y
162	CZ36,A,B,D	xxxx	36	1 0	10m	57	8.5	175	DO15
163	CZ36C	∅	36	1.0	10m	57	8.5	175	DO15
164	EVR36,A,B	xxx	36	1 0	7.0m	60		175A	DO27
165	HW36,A,B	xxx	36	1 0	7.0m	50		175	A196
166	JZ36,A,B,D	xxxx	36	1 0	7.0m	50	8 5	175	DO15
167	JZ36C	∅	36	1 0	7.0m	50	8 5	175	DO15
168	LPM36,A,-20	xx*	36	1 0	7.0m	50		150A	A1kk
169	TZ36,A,B,D	xxxx	36	1 0	10m	57	8.5	175	DO27
170	TZ36C	∅	36	1.0	10m	57	8 5	175	DO27
171	UZ8736	5	36	1.0	7.0m	50	9.0	175	A146h
172	UZ8836	10	36	1.0	7.0m	50	9.0	175	A146h
173	VR36,A,B	xxx	36	1 0	7.0m	50		125A	A1b
174	Z36,A,B,D	xxxx	36	1.0	7 0m	50	8.5	175	DO27
175	Z36C	∅	36	1.0	7.0m	50	8.5	175	DO27
176	ZA36,A,B	xxx	36	1.0	7 0m	50		150C	A1ew
177	ZB36	†	36	1.0 §	7.0m	50		150A	A1bc
178	ZD36∅,A,B	xxx	36	1.0	7 0m	45	8 5	175A	A1cm
179	ZH36,A,B	xxx	36	1.0	7.0m	50	8.5	175A	DO1
180	ZM36,A,B,D	xxxx	36	1.0	7 0m	50	8 5	175	DO41
181	ZM36C	∅	36	1.0	7 0m	50	8 5	175	DO41
182#	7733	5	36	1.1	10m	40	9 0	125A	A1bu
183#	BZY92C36	5	36	1.1	10m	40	8 0	150J	DO13
184	1N4845,A,B	xxx	36	1 2	7.0m	5.0	9.3	175	DO29

SYMBOLS AND CODES EXPLAINED IN INTERPRETER

2. SILICON REFERENCE DIODES

IN ORDER OF (1) REF. VOLTAGE, (2) DISSIPATION, and (3) TYPE No.

LINE No	3 TYPE No.	TOLERANCE 1 20 10 5 2 ± (%)	NOM. REF. VOLT. (V)	2 MAX. DISS. @ 25°C (W)	TEST CUR. Izt (A)	MAX. DYN. IMP. (Ω)	TEMP. COEFF Tc	MAX TEMP (°C)	DWG No.
1#	BZX67C36	5	36	1 3	10m	40	8 0	150J	S287
2#	ZD36#	5	36	1 3	10	40	8 0	150J	DO13
3#	ZY36	5	36	1 3	10	40	8 0	150J	A1bg
4	1N3802,A,B	xxx	36	1 5	10m	35	9 3	175S	C14∅
5	1N4478	5	36	1 5	7 0m	27		175A	A196
6	JAN1N4478	10	36	1 5	7 0m	27	9 3	175A	A1v
7#	1S4036,A	xx	36	1 5	10m	27	8 5	150A	DO1
8	1 5DKZ36,A,B	xxx	36	1 5	10m	35		175A	DO27
9	1 5JZ36,A,B,D	xxxx	36	1 5	10m	35	9 3	175	DO15
10	1 5JZ36C	∅	36	1 5	10m	35	9 3	175	DO15
11	1 5R36,A,B	xxx	36	1 5	10m	45	8 5	175A	A52c
12	1 5Z36,A,B,D	xxxx	36	1 5	10m	35	9 3	175	DO27
13	1 5Z36C	∅	36	1 5	10m	35	9 3	175	DO27
14#	BZY95C36	5	36	1 5	20m	30	32	175J	DO1
15	MC6327,A	xx	36	1 5	25m	100			A1q
16	MZ1000-26	10	36	1 5 §	7 0m	75 ∅	9 3	175J	A1ay
17#	Z3B360CF	20§∅	36	1 5	20m	33	10	175J	DO1
18	2R36,A,B	xxx	36	2.0	14m	45	8 5	175A	DO27
19	2VR36,A,B	xxx	36	2 0	14m	45			A3e
20	LMZ36,A,-20	xx*	36	2 0	14m	25		150A	A1kk
21	ZBC36	†	36	2 0 §	14m	21		150A	A1bc
22	1N5037	10	36	2 5	17m	21	8 5	150	A1gn
23	1N5037A	5	36	2.5	17m	21	8 5	150	A1gn
24#	BZX70C36	5	36	2 5	20m	30	320	150J	A171b
25	1N4882	10	36	3 0	20m	21		175A	A60n
26	1N5079	5	36	3 0	20m	21		175A	A146j
27#	1S498	10	36	3 0	40m	220	10	150J	S112
28	3R36,A,B	xxx	36	3 0	21m	25	8 5	175A	A1rw
29	3TZ36,A,B,D	xxxx	36	3 0	30m	22		175	A1ec
30	3TZ36C	∅	36	3 0	30m	22		175	A1ec
31	3VR36,A,B	xxx	36	3 0	21m	25			A222
32	3Z36,A,B	xxx	36	3 0	20m	25		150	A222
33	CZ5079	10	36	3 0	20m	21	290	175A	A196e
34	M3Z36,A	xx	36	3 0	22m	22		150A	A1kk
35	MZ736	5	36	3 0	20m	21	9 0	175A	A146j
36	MZ836	10	36	3 0	20m	21	9 0	175A	A146j
37	MZ936	20	36	3 0	20m	21	9.0	175A	A146j
38#	NT3C36	5	36	3 0	5 0m	90		125J	S43a
39	UZ736	5	36	3 0	20m	21	9 0	175A	A60
40	UZ836	10	36	3.0	20m	21	9.0	175A	A146f
41	UZ936	20	36	3 0	20m	21	9 0	175A	A60
42	ZAC36,A,B	xxx	36	3 0	7 0m	50		150C	A1ey
43	ZCC36	†	36	3 0 §	20m	21		150A	A1ey
44	3T36,A,B	xx*	36	3 5	15m	39			DO4
45	1N4031,A,B	xxx	36	5 0	35m	12	9.3	180A	S82
46	1N4971	5	36	5 0	30m	11		175A	A146m
47	JAN1N4971	5	36	5 0	30m	11	9.5	175A	A248f
48♦	1N5365	20	36	5 0	30m			200A	A1ee
49▼	1N5365A	10	36	5 0	30m	11		200A	A1ee
50▼	1N5365B	5	36	5 0	30m	11		200A	A1ee
51▼	5ZS36,A,B	xxx	36	5.0 §	30m	11		200A	A1ts
52#	5333	10∅	36	5 0	15m	35		150J	A9h
53▼	CTZC36,A,B,D∅	xxxx	36	5 0 §	30m	11 ∅	8.5	175A	A1ey
54▼	CTZC36C∅	1	36	5 0 §	30m	11 ∅	8 5	175A	A1ey
55▼	CTZC36E∅	3	36	5 0 §	30m	11 ∅	8 5	175A	A1ey
56	DSZ5736	5	36	5.0	30m	11	9.5	175A	A60r
57	DSZ5836	10	36	5 0	30m	11	9 5	175A	A60r
58	MZ5736	5	36	5.0	30m	11	9.0	175A	A60f
59	MZ5836	10	36	5.0	30m	11	9 0	175A	A60f
60	MZ5936	20	36	5 0	30m	11	9.0	175A	A60f
61▼	TZC36,A,B,D	xxxx	36	5.0 §	30m	11 ∅	8 5	175A	A1ey
62▼	TZC36C	1	36	5 0 §	30m	11 ∅	8 5	175A	A1ey
63▼	TZC36E	3	36	5 0 §	30m	11 ∅	8.5	175A	A1ey
64▼	UZ5736	5	36	5.0	30m	11	9 5	175A	A146m
65♦	UZ5836	10	36	5.0	30m	11	9.5	175A	A146m
66	UZ5936	20	36	5 0	30m	11 ∅	9 0	175A	A146m
67	ZC36	†	36	5 0 §	30m	11		150A	A1ey
68	UZ4736	5	36	8 0	30m	11		175A	A146m
69	UZ4836	10	36	8 0	30m	11		175A	A146m
70	1N1364,A	xx	36	10	150m	5 0		175A	DO4
71	1N1364B	20	36	10	150m	5 0			S11e
72	1N1364C,CA∅	xx	36	10 §	15	5 0		175J	S19a
73	1N1826	10	36	10	150m	5.0	9 0	150A	S19a
74	1N1826A	5	36	10	150m	5.0	9 0	150A	S19a
75	1N1826C,CA∅	xx	36	10	150m	5.0	9 0	150A	S19a
76	1N2991,A,B	xxx	36	10	70m	10		175C	DO4∅
77	JAN1N2991B,RB	5	36	10	70m	10	9 3	150C	DO4
78	1N4275	20	36	10	70m	10	8 5	175C	S134
79	1N4275A	10	36	10	70m	10	8 5	175C	S134
80	1N4275B	5	36	10	70m	10	8 5	175C	S134
81	JAN1N4275B	5	36	10 §	70m	10	9 3	175S	S134a
82#	1S284	10	36	10	100m	8 0		150J	S19g
83#	1S5036,A	xx	36	10	50m	8.0	9 0	150C	DO4
84#	1S5036C∅	10	36	10	50m	8.0	9 0	150C	DO4
85#	1S6036	10	36	10	50m	8.0	7 0	150	DO4
86#	1S6036A	5	36	10	50m	8 0	7 0	150	DO4
87	10PZ36,A,B,D	xxxx	36	10	70m	10	8 5	175	DO4
88	10PZ36C	∅	36	10	70m	10	8 5	175	DO4
89	10RZ36,A,B,D	xxxx	36	10	150m	5 0	9 0	155	DO4
90	10RZ36C	∅	36	10	150m	5 0	9 0	155	DO4
91	AV8036	∅2	36	10	150m	5 0		150A	S11
92	UZ7736	5	36	10	60m	12	9 0	175	S277∅
93	UZ7836	10	36	10	60m	12	9 0	175	S277∅
94	UZ7936	20	36	10	60m	12	9.0	175	S277∅
95#	Z5D360CF	20§∅	36	10	50m	8 0	9 0	150J	DO4
96#	ZC5036	5	36	10	50m	8 0	8 4	150A	S19
97#	ZD5036	10	36	10	50m	8 0	8 4	150A	S19
98#	4133	10∅	36	15	80m	4 0		150J	S87
99#	4233	10∅	36	15	80m	4.0		150J	S87
100#	BZY93C36	5	36	20 §	200m	4 0	32	175J	DO4∅
101#	ZX36	5	36	25 ∅	10	40	8 0	150J	M41
102#	4333	10∅	36	30	80m	4 0		150J	S87
103#	4433	10∅	36	30	80m	4 0		150J	S87
104	1N2825,A,B	xxx	36	50	350m	3 5	8 5	175S	C5a
105	JAN1N2825B,RB	5	36	50	350m	3 5	9 3	150C	C5a
106	1N3326	20	36	50	350m	3.5	8 5	175J	DO5
107	1N3326A	10	36	50	350m	3.5	8 5	175J	DO5
108▼	1N3326B	5	36	50	350m	3.5	8 5	175J	DO5
109	JAN1N3326B,RB	5	36	50	350m	3 5	9 3	150	DO5
110	50T36,A,B	xx*	36	50	350m	3 5	8 5		S19a
111	AV51036	5	36	50	350m	3'5	8 5	150C	C5a
112#	BZY91C36	5	36	75 §	1	1 3	9 0	175J	DO5∅
113#	4533	10∅	36	100	130m	3 0		150J	S84
114#	4633	10∅	36	100	130m	3 0		150J	S84
115#	ZC736	5	36	100 §	50	7.0	8.8	175J	S125d∅
116	1N728B	20	37	25	4 0m	70			DO7
117	AV2037	∅2	37	1 0	15m	55		150A	A19
118	TC37A5A	5△∅	37	1 0	7 5m	80	05	175A	A1ss
119	1N4066	5	37	1 5	7 5m	80	50	100	A1ss
120	1N4066A	5	37	1 5	7 5m	80	20	100	A1ss
121	AV8037	∅2	37	10	150m	7 0		150A	S11
122	AV51037	5	37	50	340m	3 6	9 0	150C	C5a
123	1N1740	5	37.2	1 2	7 5m	120	80	150C	A1kb
124	1N1740A	5	37.2	1 2	7 5m	120	40	150C	A1kb
125	AV2038	∅2	38	1 0	15m	55		150A	A19
126	IDA1Z38,A,B,C∅	xxxx	38	1.0	21m			200A	A1ht
127	AV8038	∅2	38	10	150m	7 0		150A	S11
128	AV51038	5	38	50	330m	3.8	9 0	150C	C5a
129	DPZ30-36R	xx†	38 8	300 ∅§	2 3	150m	8 5	175J	S218a
130	1N1993	10	39	150m	200u	400	10	150	C1
131	1N1993A	5	39	150m	200u	400	10	150	C1
132	1N1993B	1	39	150m	200u	400	10	150	C1
133#	Z39∅	5	39	150m	2 0m	660		150A	C18d
134#	ZZ39	10	39	15	5.0m	720		150A	C18d
135	1N1939,A,B	xx1	39	20	20m	400	10	150A	A82e
136#	RZ39A	10	39	20	100m	10	8 3	125A	DO5
137	1/4A39,A,B	xxx	39	25	1 6m	120	9 0	175	DO7
138	1/4M39Z,10,5	xxx	39	250m	1 6m	120	8 7	175J	A1cy
139	25N39	20	39	25	1 6m	120		250	DO7
140	1N728,A	xx	39	25	4 0m	70	9 2	175A	DO7
141	1N4123	5	39	25	25m	200		200J	DO7
142	1N4716	5	39	25	.05m			200A	DO14
143#	MZ39A	10	39	25	2 7m	160	8 3	150A	DO7
144	MC6028,A	xx	39	30	1 0m	140		175	A2m
145	1N975,A,B	xxx	39	40	3 2m	80	9 0	175S	DO7
146	JAN1N975B	5	39	40	3 2m	80	9 4	175A	DO7
147	1N3532	5	39	40	3 0m	100	10	200A	DO7
148	JAN1N4123	5	39	400m	250u	200	9 5	175A	A1sx
149▼	1N5750B	5	39	400m	2 0m	130	8 7	200J	DO35
150#	5534	5	39	40	5 0m	75	9 0	125A	A1ce
151#	BZX79C39	5	39	400m	2 0m	130	340	200J	A257
152#	BZY94C39	5	39	40	2 0m			150J	DO7
153	C6030	10	39	400m	1 0m	120 ∅	8.9	175A	M371c
154	C6030A	5	39	400m	1 0m	120 ∅	8.9	175A	M371c
155	C6130	10	39	400m	1 0m	120	8 9	175A	M131a
156	C6130A	5	39	400m	1 0m	120	8 9	175A	M131a
157	CZA39D,10,5	xxx	39	40 ∅	250u	200	9 0	175J	M371
158	CZB39D,10,5	xxx	39	40 ∅	1 6m	120	9 0	175J	M371
159	CZC39D,10,5	xxx	39	40 ∅	3 2m	80	9 0	175J	M371
160	CZD39D,10,5	xxx	39	40 ∅	250u	200	9 0	175J	M451
161	CZE39D,10,5	xxx	39	40 ∅	3 2m	80	9 0	175J	M451
162	HM39,A,B	xxx	39	400m§	3 2m	80		175A	A196c
163	M4Z39,A,-20	xx*	39	40	3 2m	80		150A	A1kk
164	MACZA39D,10,5	xxx	39	40 ∅	250u	200	9 0	175J	M453
165	MACZB39D,10,5	xxx	39	40 ∅	1 6m	120	9.0	175J	M453
166	MACZC39D,10,5	xxx	39	40 ∅	3 2m	80	9 0	175J	M453
167	MACZD39D,10,5	xxx	39	40 ∅	250u	200	9 0	175J	M453
168	MACZE39D,10,5	xxx	39	40 ∅	3 2m	80	9 0	175J	M453
169	MBCZA39D,10,5	xxx	39	40 ∅	250u	200	9 0	175J	M454
170	MBCZB39D,10,5	xxx	39	40 ∅	1 6m	120	9 0	175J	M454
171	MBCZC39D,10,5	xxx	39	40 ∅	3 2m	80	9 0	175J	M454
172	MBCZD39D,10,5	xxx	39	40 ∅	250u	200	9 0	175J	M454
173	MBCZE39D,10,5	xxx	39	40 ∅	3 2m	80	9 0	175J	M454
174	MCCZA39D,10,5	xxx	39	40 ∅	250u	200	9 0	175J	M455
175	MCCZB39D,10,5	xxx	39	.40 ∅	1 6m	120	9 0	175J	M455
176	MCCZC39D,10,5	xxx	39	40 ∅	3 2m	80	9 0	175J	M455
177	MCCZD39D,10,5	xxx	39	40 ∅	250u	200	9 0	175J	M455
178	MCCZE39D,10,5	xxx	39	40 ∅	3 2m	80	9 0	175J	M455
179	MDCZA39D,10,5	xxx	39	40 ∅	250u	200	9 0	150A	M410
180	MDCZB39D,10,5	xxx	39	40 ∅	1 6m	120	9 0	150A	M410

SYMBOLS AND CODES EXPLAINED IN INTERPRETER

2. SILICON REFERENCE DIODES

IN ORDER OF (1) REF. VOLTAGE, (2) DISSIPATION, and (3) TYPE No.

LINE No	3 TYPE No.	TOLERANCE 20 10 5 2 ± (%)	1 NOM REF. VOLT. (V)	2 MAX. DISS. @ 25°C (W)	TEST CUR. Izt (A)	MAX. DYN. IMP. (Ω)	TEMP. COEFF Tc	MAX. TEMP (°C)	DWG. No
1	MDCZC39D,10,5	xxx	39	.40 ⊘	3 2m	80	9 0	150A	M410
2	MDCZD39D,10,5	xxx	39	40 ⊘	250u	200	9 0	150A	M410
3	MDCZE39D,10,5	xxx	39	.40 ⊘	3 2m	80	9 0	150A	M410
4	MZ500-30	10	39	.4 §	3 2m	80 ∅	9.4	175J	DO7
5	MZC39A10	†	39	400m§	1.3m	230	9 4	175J	M468
6	MZC39B10	§†	39	400m§	250u	200		175J	M468
7	1/2Z39T5	5	39	50	3.2m	64		175	A94f
8	1N3409∅	10	39	50	1.5m	190	6.8	200A	P5
9	1N3423	10	39	50	1.0m	440	7 5	200A	P5
10	1N5259	20†	39	.50	3 2m			200A	DO7
11	1N5259A,B	§∅	39	.50	3 2m	80	9.4	200A	DO7
12#	DZ39A	10	39	.50	5 1m	100	8 3	150A	A100
13	IDAZ3409,A,B,C∅	xxxx	39	500m	1.5m	190	6.8	200A	A1hc
14	MTZ628,A	xx	39	50	1 0m	140		175A	A60e
15	MZ92-39	†	39	500m§	3.2m		8 7	150J	C103
16	S5259,A,B	xxx	39	500m	3 2m	80	9.4	175	DO41
17#	ZSF39	1	39	500m	7 0m	10	1 0	150S	M487a
18	1N4646	5	39	60	3 2m	1 0k	9.4	200A	DO14
19#	NT0.6C39	5	39	600m	5 0m	75		125J	M498
20	7JZ39	†	39	750m	3 2m	80	9.0	175	DO15
21	7Z39,A,B,D	xxxx	39	750m	3 2m	80	9 0	175	DO27
22	7Z39C	⊘	39	750m	3 2m	80	9 0	175	DO27
23	7ZM39,A,B,D	xxxx	39	750m	3 2m	80	9 0	175	DO41
24	7ZM39C	⊘	39	750m	3 2m	80	9 0	175	DO41
25	1N3693	20	39	750m	3.2m	80	9.0	175S	A1az
26	1N3693A	10	39	750m	3.2m	80	9.0	175S	A1az
27	1N3693B	5	39	750m	3 2m	80	9 0	175S	A1az
28	MC6128,A	xx	39	75	5 0m	140		175A	A2d
29	MMZ39,A,-20	xx*	39	75	3.2m	80		150A	A1kk
30	1A39M,A,B	xxx	39	1 0	6.5m	60		75A	DO15
31	1E39Z,10,5	xxx	39	1 0	6 5m	60	9 0	150A	A52g
32	1M39Z,10,5	xxx	39	1 0	6 5m	60	9.0	175S	DO1
33	1N1785,A	xx	39	1 0	15m	45		175S	DO13
34	1N1883	10	39	1 0	8 0m	35	7 0	200C	A126
35	1N1883A	5	39	1 0	8 0m	35	7.0	200C	A126
36	1N3034,A,B	xxx	39	1 0	6.5m	60		175A	A31a
37	JAN1N3034B	5	39	1 0	6 5m	60	9 4	175A	A31c
38	1N4176	20	39	1.0	6 5m	60	9.0	175	DO29
39	1N4176A	10	39	1.0	6 5m	60	9.0	175	DO29
40	1N4176B	5	39	1.0	6 5m	60	9 0	175	DO29
41	1N4341,A,B	xxx	39	1.0	6 5m	60	9.0	300S	DO7
42♦	1N4418	20	39	1 0	6 5m	21		175S	A266a
43	1N4418A	10	39	1 0	6 5m	21	9 0	175A	A1cm
44	1N4418B	5	39	1 0	6 5m	21	9 0	175A	A1cm
45	1N4675	5	39	1 0	6 5m	750	9 4	200A	DO15
46	1N4754	10	39	1 0	6 5m	60		200A	A1ay
47	1N4754A	5	39	1 0	6 5m	60		200A	A1ay
48	1N5577	20	39	1 0 §	6 5m			200A	A196d
49	1N5577A	10	39	1.0 §	6 5m	60		200A	A196d
50	1N5577B	5	39	1 0 §	6.5m	60		200A	A196d
51	1N5647		39	1 0	1 0m		10m	175A	DO13
52	1N5647A		39	1 0	1 0m		10m	175A	DO13
53	1R39,A,B	xxx	39	1 0	6 5m	60	9.0	175A	A52c
54#	1S243	10	39	1 0	10m	40		150J	A56a
55#	1S3039	xx	39	1 0	5 0m	80	8 5	150	A3
56	1Z39,A,B	xxx	39	1.0	6 5m	60		150	A1ay
57	AV2039	∅2	39	1 0	15m	55		150A	A19
58#	BZX29C39	5	39	1 0	5 0m	60	9 0	175J	A1cd
59#	BZX61C39	5	39	1.0	5 0m	60	7 0	175J	A3y
60	CZ39,A,B,D	xxxx	39	1 0	10m	58	9 0	175	DO15
61	CZ39C	⊘	39	1 0	10m	58	9.0	175	DO15
62	EVR39,A,B	xxx	39	1.0	6 0m	75		175A	DO27
63#	EZ39A	10	39	1 0	10m	1 0k	8 3		A1em
64	HW39,A,B	xxx	39	1 0	6 5m	60		175	A196
65	JZ39,A,B,D	xxxx	39	1.0	6 5m	60	9 0	175	DO15
66	JZ39C	⊘	39	1 0	6 5m	60	9 0	175	DO15
67	LPM39,A,-20	xx*	39	1 0	6.5m	60		150A	A1kk
68	TZ39,A,B,D	xxxx	39	1 0	10m	58	9.0	175	DO27
69	TZ39C	⊘	39	1 0	10m	58	9 0	175	DO27
70	VR39,A,B	xxx	39	1 0	6 5m	60		125A	A1b
71	Z39,A,B,D	xxxx	39	1 0	6 5m	60	9 0	175	DO27
72	Z39C	⊘	39	1 0	6 5m	60	9 0	175	DO27
73	ZA39,A,B	xxx	39	1 0	6 5m	60		150C	A1ew
74	ZB39	†	39	1 0 §	6 5m	60		150A	A1bc
75	ZD39⊘,A,B	xxx	39	1 0	6.5m	55	9 0	175A	A1cm
76#	ZF39A	10	39	1 0	10m	51	8.3	150A	DO13
77	ZH39,A,B	xxx	39	1 0	6.5m	60	9.0	175A	DO1
78	ZM39,A,B,D	xxxx	39	1 0	6 5m	60	9 0	175	DO41
79#	7734	5	39	1.1	10m	40	9.0	125A	A1bu
80	1N4846,A,B	xxx	39	1 2	6 5m	60	9 4	175	DO29
81#	BZX67C39	5	39	1 3	10m	40	8 0	150J	S287
82#	ZD39#	5	39	1 3	10	40	8 0	150J	DO13
83	ZM39⊘	10	39	1.3	10	40	8 0	150J	DO13
84#	ZU39	10	39	1 3	10	40	8 0	150J	A1bg
85#	ZY39	5	39	1 3	10	40	8 0	150J	A1bg
86	1N3803,A,B	xxx	39	1 5	10m	40	9.4	175S	C14⊘
87	1N4479	5	39	1 5	6 5m	30		175A	A196
88	JAN1N4479	10	39	1 5	6 5m	30	9.4	175A	A1v
89#	1S4039,A	xx	39	1 5	5 0m	30	8 5	150A	DO1
90	1 5DKZ39,A,B	xxx	39	1 5	10m	40		175A	DO27
91	1 5JZ39C	⊘	39	1 5	10m	40	9 4	175	DO15
92	1 5R39,A,B	xxx	39	1 5	9 5m	50	9 0	175A	A52c
93	1 5Z39,A,B,D	xxxx	39	1.5	10m	40	9 4	175	DO27
94	1 5Z39C	⊘	39	1 5	10m	40	9 4	175	DO27
95#	BZY95C39	5	39	1 5	10m	35	35	175J	DO1
96	MC6328,A	xx	39	1 5	25m	120			A1q
97	MZ1000-27	10	39	1.5 §	6 5m	90 ∅	9 4	175J	A1ay
98#	Z3B390CF	20§∅	39	1 5	20m	38	10	175J	DO1
99	2R39,A,B	xxx	39	2 0	13m	50	9 0	175A	DO27
100	2VR39,A,B	xxx	39	2.0	13m	50			A3e
101	LMZ39,A,-20	xx*	39	2 0	13m	30		150A	A1kk
102	ZBC39	†	39	2.0 §	13m	27		150A	A1bc
103	1N5038	10	39	2 5	16m	24	9.0	150	A1gn
104	1N5038A	5	39	2 5	16m	24	9 0	150	A1gn
105#	BZX70C39	5	39	2 5	10m	35	350	150J	A171b
106	1N5080	5	39	3 0	20m	27		175A	A146j
107	3R39,A,B	xxx	39	3 0	20m	30	9 0	175A	A1rw
108	3TZ39,A,B,D	xxxx	39	3.0	30m	30		175	A1ec
109	3TZ39C	⊘	39	3.0	30m	30		175	A1ec
110	3VR39,A,B	xxx	39	3 0	19m	30			A222
111	CZ5080	10	39	3 0	20m	27	300	175A	A196e
112#	FDZ39A	10	39	3 0 ⊘	30m	17	8.3	150A	S303
113	M3Z39,A	xx	39	3.0	20m	27		150A	A1kk
114	MZ739	5	39	3 0	20m	27	9.5	175A	A146j
115	MZ839	10	39	3.0	20m	27	9.5	175A	A146j
116	MZ939	20	39	3.0	20m	27	9.5	175A	A146j
117#	NT3C39	5	39	3.0	5 0m	100		125J	S43a
118	ZAC39,A,B	xxx	39	3.0	6.5m	60		150C	A1ey
119	ZCC39	†	39	3.0 §	20m	27		150A	A1ey
120	3T39,A,B	xx*	39	3.5	15m	45			DO4
121#	4GZ39A	10	39	4 0	65m	300	9.0		S19q
122	1N4032,A,B	xxx	39	5 0	32m	15	9.4	180A	S82
123	1N4972	5	39	5.0	30m	14		175A	A146m
124	JAN1N4972	5	39	5.0	30m	14	9.5	175A	A248f
125♦	1N5366	20	39	5.0	30m			200A	A1ee
126▼	1N5366A	10	39	5 0	30m	14		200A	A1ee
127▼	1N5366B	5	39	5.0	30m	14		200A	A1ee
128▼	5ZS39,A,B	xxx	39	5 0 §	30m	14		200A	A1ts
129#	5334	10	39	5 0	15m	35		150J	A9h
130▼	CTZC39,A,B,D∅	xxxx	39	5 0 §	30m	14 ∅	9 0	175A	A1ey
131▼	CTZC39C∅	1	39	5 0 §	30m	14 ∅	9 0	175A	A1ey
132▼	CTZC39E∅	3	39	5 0 §	30m	14 ∅	9.0	175A	A1ey
133▼	TZC39,A,B,D	xxxx	39	5.0 §	30m	14 ∅	9 0	175A	A1ey
134▼	TZC39C	1	39	5 0 §	30m	14 ∅	9.0	175A	A1ey
135▼	TZC39E	3	39	5 0 §	30m	14 ∅	9.0	175A	A1ey
136	ZC39	†	39	5.0 §	30m	14		150A	A1ey
137#	KR55	10	39	8 0	50m	6.0	9.8	150A	S186
138	UZ4739	5	39	8.0	30m	14		175A	A146m
139	UZ4839	10	39	8 0	30m	14		175A	A146m
140	1N1365,A	xx	39	10	150m	5.0		175A	DO4
141	1N1365B	20	39	10	150m	5.0			S11e
142	1N1365C,CA∅	xx	39	10 §	.15	5.0		175J	S19a
143	1N1827	10	39	10	150m	5.0	9.0	150A	S19a
144	1N1827A	5	39	10	150m	5 0	9.0	150A	S19a
145	1N1827C,CA∅	xx	39	10	150m	5 0	9.0	150A	S19a
146	1N1899	10	39	10	8.0m	35	7.0	200A	S82
147	1N1899A	5	39	10	8.0m	35	7 0	200A	S82
148	1N2992,A,B	xxx	39	10	65m	11		175C	DO4⊘
149	JAN1N2992B,RB	5	39	10	65m	11	9.4	150C	DO4
150	1N4276	20	39	10	65m	11	9.0	175C	S134
151	1N4276A	10	39	10	65m	11	9.0	175C	S134
152	1N4276B	5	39	10	65m	11	9.0	175C	S134
153	JAN1N4276B	5	39	10 §	65m	11	9 4	175S	S134a
154#	1S285	10	39	10	100m	8 0		150J	S19g
155#	1S5039,A	xx	39	10	50m	8.0	9.0	150C	DO4
156#	1S5039C∅	10	39	10	50m	8.0	9.0	150C	DO4
157#	1S6039	10	39	10	50m	10	7 0	150	DO4
158#	1S6039A	5	39	10	50m	8 0	7.0	150	DO4
159	10PZ39,A,B,D	xxxx	39	10	65m	11	9.0	175	DO4
160	10PZ39C	⊘	39	10	65m	11	9 0	175	DO4
161	10RZ39,A,B,D	xxxx	39	10	150m	5.0	9.0	155	DO4
162	10RZ39C	⊘	39	10	150m	5.0	9.0	155	DO4
163	AV8039	∅2	39	10	150m	7 0		150A	S11
164#	GZ39A	10	39	10 ⊘	51m	10	8.3	150A	DO4
165#	PZ39A	10	39	10 ⊘	51m	10	8.3	150A	S95a
166#	Z5D390CF	20§∅	39	10	50m	8.0	9.0	150J	DO4
167#	ZC5039	5	39	10	50m	8.0	8.5	150A	S19
168#	ZD5039	10	39	10	50m	8 0	8.5	150A	S19
169#	4134	10∅	39	15	80m	4.0		150J	S87
170#	4234	10∅	39	15	80m	4.0		150J	S87
171#	BZY93C39	5	39	20 §	200m	5.0	35	175J	DO4⊘
172#	SZ39B	5	39	25	100m	5 0	9 0	150B	S16
173#	ZL39	10	39	25 ⊘	10	40	8 0	150J	M41
174#	ZX39	5	39	25 ⊘	10	40	8.0	150J	M41
175#	4334	10∅	39	30	80m	4.0		150J	S87
176#	4434	10	39	30	80m	4.0		150J	S87
177	1N2826,A,B	xxx	39	50	320m	4 0	9 0	175S	C5a
178	JAN1N2826B,RB	5	39	50	320m	4 0	9.4	150C	C5a
179	1N3327	20	39	50	320m	4 0	9.0	175J	DO5
180	1N3327A	10	39	50	320m	4.0	9 0	175J	DO5
181	1N3327B	5	39	50	320m	4 0	9.0	175J	DO5
182	JAN1N3327B,RB	5	39	50	320m	4.0	9 4	150	DO5
183	50T39,A,B	xx*	39	50	320m	4 0	9 0		S19e
184	AV51039	5	39	50	320m	4 0	9 0	150C	C5a
185	75TE39,A	xx	39	75 §	260m	18m	1 0	125C	TO36
186#	BZY91C39	5	39	75 §	500m	1 4	9.0	175J	DO5⊘
187	80TF39,A	xx	39	80	260m	18m	1 0	125C	M117c
188#	4534	10	39	100	130m	3.0		150J	S84
189#	4634	10	39	100	130m	3 0		150J	S84
190#	ZC739	5	39	100 §	25	19	8 9	175J	S125d⊘
191	1N1966	10	39 5	400m	200u	400 ∅	10		A82g
192	DSZ3040	10	40		20m	27	9 5		A266
193	1N1883B	1	40	1 0	8 0m	26 △	7.0	175A	DO13
194	AV11	10	40	1 0	15m	55		150A	A19
195	AV2040	∅2	40	1.0	15m	55		150A	A19
196	UZ8740	5	40	1 0	6 5m	62	9 5	175	A146h
197	UZ8840	10	40	1 0	6 5m	62	9.5	175	A146h
198	1N5081	5	40	3 0	20m	27		175A	A146j
199	CZ5081	10	40	3.0	20m	27	340	175A	A196e

SYMBOLS AND CODES EXPLAINED IN INTERPRETER

2. SILICON REFERENCE DIODES

IN ORDER OF (1) REF. VOLTAGE, (2) DISSIPATION, and (3) TYPE No.

LINE No	3 TYPE No.	TOLERANCE 1 20 10 5 2 ± (%)	NOM. REF. VOLT (V)	2 MAX DISS @ 25°C (W)	TEST CUR Izt (A)	MAX. DYN IMP. (Ω)	TEMP. COEFF Tc	MAX. TEMP (°C)	DWG. No.
1	MZ740	5	40	3.0	20m	27	9 5	175A	A146j
2	MZ840∅	10	40	3 0	20m	27	9 5	175A	A146j
3	MZ940	20	40	3 0	20m	27	9 5	175A	A146j
4	UZ740	5	40	3 0	20m	27	9 5	175A	A60
5	UZ840	10	40	3 0	20m	27	9 5	175A	A146f
6	UZ940	20	40	3.0	20m	27	9 5	175A	A60
7	1N5119	5	40	5 0	30m	14		175A	A146m
8	DSZ5740	5	40	5 0	30m	14	9 5	175A	A60r
9	DSZ5840	10	40	5 0	30m	14	9 5	175A	A60r
10	MZ5740	5	40	5 0	30m	14	9 5	175A	A60f
11	MZ5840	10	40	5.0	30m	14	9.5	175A	A60f
12	MZ5940	20	40	5 0	30m	14	9.5	175A	A60f
13▼	UZ5740	5	40	5 0	30m	14	9 5	175A	A146m
14♦	UZ5840	10	40	5.0	30m	14	9 5	175A	A146m
15	UZ5940	20	40	5.0	30m	14 ∅	9.5	175A	A146m
16	AV111	10	40	10	150m	7 0		150A	S11
17	AV8040	∅2	40	10	150m	7 0		150A	S11
18	UZ7740	5	40	10	60m	15	9 5	175	S277∅
19	UZ7840	10	40	10	60m	15	9 5	175	S277∅
20	UZ7940	20	40	10	60m	15	9 5	175	S277∅
21	AV51040	5	40	50	310m	4 2	9 0	150C	C5a
22	1N2770	5	40 8		7 5m	120	50	175A	A1jh
23	1N2770A	5	40 8		7 5m	120	25	175A	A1jh
24	1N233∅	10	41	150m	200u			150A	C1
25	1N233A∅	5	41	150m	200u			150A	C1
26	1N1321,A	xx	41	15	20m		11	150A	C1
27	IDAZ233,A,B,C∅								
		xxxx	41	150m	200u			150A	A1hc
28	PS6321,A	15x	41	50	20m				DO14
29	AV2041	∅2	41	1 0	15m	55		150A	A19
30	AV8041	∅2	41	10	150m	7 0		150A	S11
31	AV51041	5	41	50	300m	4 3	9 0	150C	C5a
32	HRE41.5	5	41 5		10m	65	.50	70A	A126a
33	HRE41 5A	5	41 5		10m	65	50	125A	A126a
34	PS1505	5	42	25	10m	75	20	150A	A1gc
35	PS1505A	5	42	25	10m	75	10	150A	A1gc
36	AV2042	∅2	42	1 0	15m	55		150A	A19
37	IDA1Z42,A,B,C∅								
		xxxx	42	1 0	20m			200A	A1ht
38	AV8042	∅2	42	10	150m	7 0		150A	S11
39	AV51042	5	42	50	290m	4 4	9 0	150C	C5a
40	DPZ30-39R	xx†	42	300 ∅§	2.1	160m	9 0	175J	S218a
41#	BZX70C43	5	42.5	2 5	10m	40	400	150J	A171b
42	1/4A43,A,B	xxx	43	25	1 5m	140	9 0	175	DO7
43	1/4M43Z,10,5								
		xxx	43	250m	1 5m	140	9 0	175J	A1cb
44	25N43	20	43	25	1 5m	140		250	DO7
45	1N729,A	xx	43	25	4.0m	84	9 2	175A	DO7
46	1N729B	20	43	25	4 0m	84			DO7
47	1N4124	5	43	25	25m	250		200J	DO7
48	1N4717	5	43	25	.05m			200A	DO14
49	MC6029,A	xx	43	30	1 0m	172		175	A2m
50	1N976,A,B	xxx	43	40	3 0m	93	9 0	175S	DO7
51	JAN1N976B	5	43	40	3 0m	93	9 5	175A	DO7
52	1N3533	5	43	40	2 0m	130	10	200A	DO7
53	JAN1N4124	5	43	400m	250u	250	9 5	175A	A1sx
54▼	1N5751B	5	43	400m	2 0m	150	8 6	200J	DO35
55#	5535	5	43	40	5 0m	90	9 0	125A	A1ce
56#	BZX79C43	5	43	400m	2 0m	150	370	200J	A257
57#	BZY94C43	5	43	40				150J	DO7
58	C6031	10	43	400m	1 0m	130 ∅		175A	M371c
59	C6031A	5	43	400m	1 0m	130 ∅		175A	M371c
60	C6131	10	43	400m	1 0m	130		175A	M131a
61	C6131A	5	43	400m	1 0m	130		175A	M131a
62	CZA43D,10,5								
		xxx	43	40 ∅	250u	250	9 0	175J	M371
63	CZB43D,10,5								
		xxx	43	40 ∅	1 5m	140	9 0	175J	M371
64	CZC43D,10,5								
		xxx	43	40 ∅	3 0m	93	9 0	175J	M371
65	CZD43D,10,5								
		xxx	43	40 ∅	250u	200	9 0	175J	M451
66	CZE43D,10,5								
		xxx	43	40 ∅	3 0m	93	9 0	175J	M451
67	HM43,A,B	xxx	43	400m§	3 0m	93		175A	A196c
68	M4Z43,A,-20								
		xx*	43	40	3 0m	93		150A	A1kk
69	MACZA43D,10,5								
		xxx	43	40 ∅	250u	250	9 0	175J	M453
70	MACZB43D,10,5								
		xxx	43	400m∅	1 5m	140	9 0	175J	M453
71	MACZC43D,10,5								
		xxx	43	40 ∅	3 0m	93	9 0	175J	M453
72	MACZD43D,10,5								
		xxx	43	40 ∅	250u	200	9 0	175J	M453
73	MACZE43D,10,5								
		xxx	43	40 ∅	3 0m	93	9 0	175J	M453
74	MBCZA43D,10,5								
		xxx	43	40 ∅	250u	250	9 0	175J	M454
75	MBCZB43D,10,5								
		xxx	43	40 ∅	1 5m	140	9 0	175J	M454
76	MBCZC43D,10,5								
		xxx	43	40 ∅	3 0m	93	9 0	175J	M454
77	MBCZD43D,10,5								
		xxx	43	40 ∅	250u	200	9 0	175J	M454
78	MBCZE43D,10,5								
		xxx	43	40 ∅	3 0m	93	9 0	175J	M454
79	MCCZA43D,10,5								
		xxx	43	40 ∅	250u	250	9 0	175J	M455
80	MCCZB43D,10,5								
		xxx	43	40 ∅	1 5m	140	9 0	175J	M455
81	MCCZC43D,10,5								
		xxx	43	40 ∅	3 0m	93	9 0	175J	M455
82	MCCZD43D,10,5								
		xxx	43	40 ∅	250u	200	9 0	175J	M455
83	MCCZE43D,10,5								
		xxx	43	40 ∅	3 0m	93	9 0	175J	M455
84	MDCZA43D,10,5								
		xxx	43	40 ∅	250u	250	9 0	150A	M410
85	MDCZB43D,10,5								
		xxx	43	40 ∅	1 5m	140	9.0	150A	M410
86	MDCZC43D,10,5								
		xxx	43	.40 ∅	3.0m	93	9 0	150A	M410
87	MDCZD43D,10,5								
		xxx	43	40 ∅	250u	200	9 0	150A	M410
88	MDCZE43D,10,5								
		xxx	43	40 ∅	3 0m	93	9.0	150A	M410
89	MZ500-31	10	43	4 §	3 0m	95 ∅	9.5	175J	DO7
90	MZC43A10	†	43	400m§	1 2m	280	9.5	175J	M468
91	MZC43B10	§†	43	400m§	250u	250		175J	M468
92	1/2Z43T5	5	43	50	3.0m	74		175	A94f
93	1N5260	20†	43	50	3.0m			200A	DO7
94	1N5260A,B	§∅	43	.50	3.0m	93	9 5	200A	DO7
95	MTZ629,A	xx	43	.50	1 0m	172		175A	A60e
96	MZ92-43	†	43	500m§	3.0m		8.8	150J	C103
97	S5260,A,B	xxx	43	500m	3 0m	93	9 5	175	DO41
98#	ZSF43	1	43	500m	7.0m	10	1.0	150S	M487a
99	1N4647	5	43	.60	3.0m	1.5k	9.5	200A	DO14
100#	NT0.6C43	5	43	600m	5 0m	90		125J	M498
101	7JZ43	†	43	750m	3.0m	93	9 0	175	DO15
102	7Z43,A,B,D								
		xxxx	43	750m	3.0m	93	9 0	175	DO27
103	.7Z43C	∅	43	750m	3 0m	93	9.0	175	DO27
104	7ZM43,A,B,D								
		xxxx	43	750m	3 0m	93	9.0	175	DO41
105	.7ZM43C	∅	43	750m	3.0m	93	9 0	175	DO41
106	1N3694	20	43	750m	3 0m	93	9.0	175S	A1az
107	1N3694A	10	43	750m	3.0m	93	9.0	175S	A1az
108	1N3694B	5	43	750m	3 0m	93	9 0	175S	A1az
109	MC6129,A	xx	43	75	5.0m	172		175A	A2d
110	MMZ43,A,-20								
		xx*	43	.75	3.0m	93		150A	A1kk
111	1A43M,A,B	xxx	43	1 0	6.0m	70		75A	DO15
112	1E43Z,10,5	xxx	43	1 0	6 0m	70	9.0	150A	A52g
113	1M43Z,10,5	xxx	43	1 0	6 0m	70	9.0	175S	DO1
114	1N1786,A	xx	43	1 0	15m	54		175S	DO13
115	1N3035,A,B	xxx	43	1.0	6 0m	70		175A	A31a
116	JAN1N3035B	5	43	1 0	6.0m	70	9.5	175A	A31c
117	1N4342,A,B	xxx	43	1 0	6.0m	70	9 0	300S	DO7
118♦	1N4419	20	43	1 0	6 0m	23		175S	A266a
119	1N4419A	10	43	1 0	6.0m	23	9 0	175A	A1cm
120	1N4419B	5	43	1 0	6 0m	23	9 0	175A	A1cm
121	1N4676	5	43	1 0	6.0m	1 0k	9 5	200A	DO15
122	1N4755	10	43	1 0	6.0m	70		200A	A1ay
123	1N4755A	5	43	1 0	6 0m	70		200A	A1ay
124	1N5578	20	43	1.0 §	6 0m			200A	A196d
125	1N5578A	10	43	1 0 §	6.0m	70		200A	A196d
126	1N5578B	5	43	1 0 §	6 0m	70		200A	A196d
127	1N5648		43	1.0	1 0m		10m	175A	DO13
128	1N5648A		43	1 0	1 0m		10m	175A	DO13
129	1R43,A,B	xxx	43	1 0	6 0m	70	9 0	175A	A52c
130#	1S244	10	43	1 0	6 0m	50		150J	A56a
131#	1S3043	xx	43	1 0	5 0m	120	8 5	150	A3
132	1Z43,A,B	xxx	43	1 0	6 0m	70		150	A1ay
133	AV2043	∅2	43	1 0	15m	55		150A	A19
134#	BZX29C43	5	43	1 0	5 0m	70	9 0	175J	A1cd
135#	BZX61C43	5	43	1 0	5 0m	70	7 0	175J	A3y
136	CZ43,A,B,D	xxxx	43	1 0	10m	59	9 0	175	DO15
137	CZ43C	∅	43	1 0	10m	59	9 0	175	DO15
138	EVR43,A,B	xxx	43	1 0	6 0m	90		175A	DO27
139	HW43,A,B	xxx	43	1 0	6.0m	70		175	A196
140	JZ43,A,B,D	xxxx	43	1 0	6 0m	70	9 0	175	DO15
141	JZ43C	∅	43	1 0	6 0m	70	9 0	175	DO15
142	LPM43,A,-20								
		xx*	43	1 0	6 0m	70		150A	A1kk
143	TC43A5A	5△∅	43	1 0	7 5m	90	05	175A	A1ss
144	TZ43,A,B,D	xxxx	43	1 0	10m	59	9 0	175	DO27
145	TZ43C	∅	43	1 0	10m	59	9 0	175	DO27
146	VR43,A,B	xxx	43	1 0	6.0m	70		125A	A1b
147	Z43,A,B,D	xxxx	43	1.0	6.0m	70	9 0	175	DO27
148	Z43C	∅	43	1 0	6 0m	70	9 0	175	DO27
149	ZA43,A,B	xxx	43	1 0	6 0m	70		150C	A1ew
150	ZB43	†	43	1 0 §	6 0m	70		150A	A1bc
151	ZD43∅,A,B	xxx	43	1 0	6 0m	65	9.0	175A	A1cm
152	ZH43,A,B	xxx	43	1 0	6 0m	70	9 0	175A	DO1
153	ZM43,A,B,D	xxxx	43	1 0	6 0m	70	9 0	175	DO41
154	ZM43C	∅	43	1 0	6 0m	70	9 0	175	DO41
155#	7735	5	43	1.1	10m	60	9 0	125A	A1bu
156	1N4847,A,B	xxx	43	1 2	5.8m	70	9 5	175	DO29
157#	BZX67C43	5	43	1 3	10m	45	8 0	150J	S287
158#	ZD43#	5	43	1 3	10	45	8 0	150J	DO13
159#	ZY43	5	43	1 3	10	45	8 0	150J	A1bg
160	1N3804,A,B	xxx	43	1 5	9 0m	45	9.5	175S	C14∅
161	1N4067	5	43	1 5	7 5m	90	50	100	A1ss
162	1N4067A	5	43	1 5	7 5m	90	20	100	A1ss
163	1N4480	5	43	1 5	6 0m	40		175A	A196
164	JAN1N4480	10	43	1 5	6.0m	40	9.5	175A	A1v
165#	1S4043,A	xx	43	1 5	5 0m	35	8.5	150A	DO1
166	1.5DKZ43,A,B								
		xxx	43	1 5	9 0m	45		175A	DO27
167	1.5JZ43,A,B,D								
		xxxx	43	1 5	9 0m	45	9 5	175	DO15
168	1 5JZ43C	∅	43	1.5	9 0m	45	9 5	175	DO15
169	1 5R43,A,B	xxx	43	1 5	9 0m	60	9 0	175A	A52c
170	1 5Z43,A,B,D								
		xxxx	43	1 5	9 0m	45	9 5	175	DO27
171	1 5Z43C	∅	43	1 5	9 0m	45	9.5	175	DO27
172#	BZY95C43	5	43	1 5	10m	40	40	175J	DO1
173	MC6329,A	xx	43	1 5	25m	140			A1q
174	MZ1000-28	10	43	1 5 §	6 0m	105 ∅	9 5	175J	A1ay
175#	Z3B430CF	20§∅	43	1 5	20m	44	11	175J	DO1
176	2R43,A,B	xxx	43	2 0	12m	60	9 0	175A	DO27
177	2VR43,A,B	xxx	43	2 0	12m	60			A3e
178	LMZ43,A,-20								
		xx*	43	2 0	11m	35		150A	A1kk
179	ZBC43	†	43	2 0 §	12m	35		150A	A1bc
180	1N5039	10	43	2 5	15m	27	9 0	150	A1gn
181	1N5039A	5	43	2 5	15m	27	9 0	150	A1gn
182	1N5082	5	43	3.0	15m	35		175A	A146j

SYMBOLS AND CODES EXPLAINED IN INTERPRETER

2. SILICON REFERENCE DIODES

IN ORDER OF (1) REF. VOLTAGE, (2) DISSIPATION, and (3) TYPE No.

LINE No.	3 TYPE No	TOLERANCE 1 20 10 5 2 ± (%)	NOM. REF. VOLT (V)	2 MAX. DISS @ 25°C (W)	TEST CUR. Izt (A)	MAX. DYN IMP. (Ω)	TEMP. COEFF Tc	MAX. TEMP (°C)	DWG. No.
1	3R43,A,B	xxx	43	3 0	18m	35	9.0	175A	A1rw
2	3TZ43,A,B,D	xxxx	43	3.0	20m	35		175	A1ec
3	3TZ43C	∅	43	3 0	20m	35		175	A1ec
4	3VR43,A,B	xxx	43	3.0	18m	35			A222
5	CZ5082	10	43	3 0	15m	35	350	175A	A196e
6	M3Z43,A	xx	43	3 0	18m	36		150A	A1kk
7	MZ743	5	43	3 0	15m	35	9.5	175A	A146j
8	MZ843	10	43	3.0	15m	35	9.5	175A	A146j
9	MZ943	20	43	3.0	15m	35	9 5	175A	A146j
10#	NT3C43	5	43	3 0	5.0m	100		125J	S43a
11	ZAC43,A,B	xxx	43	3 0	6 0m	70		150C	A1ey
12	ZCC43	†	43	3 0 §	15m	35		150A	A1ey
13	3T43,A,B	xx*	43	3.5	15m	54			DO4
14	1N4033,A,B	xxx	43	5 0	29m	20	9 5	180A	S82
15	1N4973	5	43	5 0	30m	20		175A	A146m
16	JAN1N4973	5	43	5 0	30m	20	9.5	175A	A248f
17♦	1N5367	20	43	5 0	30m			200A	A1ee
18▼	1N5367A	10	43	5 0	30m	20		200A	A1ee
19▼	1N5367B	5	43	5.0	30m	20		200A	A1ee
20▼	5ZS43,A,B	xxx	43	5.0 §	30m	20		200A	A1ts
21#	5335	10∅	43	5 0	15m	50		150J	A9h
22▼	CTZC43,A,B,D∅	xxxx	43	5.0 §	30m	20 ∅	9.0	175A	A1ey
23▼	CTZC43C∅	1	43	5 0 §	30m	20 ∅	9 0	175A	A1ey
24▼	CTZC43E∅	3	43	5.0 §	30m	20 ∅	9 0	175A	A1ey
25▼	TZC43,A,B,D	xxxx	43	5 0 §	30m	20 ∅	9.0	175A	A1ey
26▼	TZC43C	1	43	5.0 §	30m	20 ∅	9.0	175A	A1ey
27▼	TZC43E	3	43	5.0 §	30m	20 ∅	9 0	175A	A1ey
28	ZC43	†	43	5.0 §	30m	20		150A	A1ey
29	UZ4743	5	43	8 0	30m	20		175A	A146m
30	UZ4843	10	43	8 0	30m	20		175A	A146m
31	1N1366,A	xx	43	10	150m	6 0		175A	DO4
32	1N1366B	20	43	10	150m	6 0			S11e
33	1N1366C,CA∅	xx	43	10 §	15	6 0		175J	S19a
34	1N1828	10	43	10	150m	6 0	9 0	150A	S19a
35	1N1828A	5	43	10	150m	6.0	9 0	150A	S19a
36	1N1828C,CA∅	xx	43	10	150m	6 0	9 0	150A	S19a
37	1N2993,A,B	xxx	43	10	60m	12		175C	DO4∅
38	JAN1N2993B,RB	5	43	10	60m	12	9 5	150C	DO4
39	1N4277	20	43	10	60m	12	9 0	175C	S134
40	1N4277A	10	43	10	60m	12	9 0	175C	S134
41	1N4277B	5	43	10	60m	12	9 0	175C	S134
42	JAN1N4277B	5	43	10 §	60m	12	9 5	175S	S134a
43#	1S286	10	43	10	60m	9.0		150J	S19g
44#	1S5043,A	xx	43	10	50m	10	9 0	150C	DO4
45#	1S5043C∅	10	43	10	50m	10	9 0	150C	DO4
46#	1S6043	10	43	10	50m	10	7 0	150	DO4
47#	1S6043A	5	43	10	50m	10	7 0	150	DO4
48	10PZ43,A,B,D	xxxx	43	10	60m	12	9.0	175	DO4
49	10PZ43C	∅	43	10	60m	12	9 0	175	DO4
50	10RZ43,A,B,D	xxxx	43	10	150m	6 0	9.0	155	DO4
51	10RZ43C	∅	43	10	150m	6 0	9 0	155	DO4
52	AV8043	∅2	43	10	150m	7.0		150A	S11
53#	Z5D430CF	20§∅	43	10	50m	10	9.0	150J	DO4
54#	ZC5043	5	43	10	50m	10	8 6	150A	S19
55#	ZD5043	10	43	10	50m	8 0	8.6	150A	S19
56#	4135	10	43	15	80m	6.0		150J	S87
57#	4235	10	43	15	80m	6 0		150J	S87
58#	BZY93C43	5	43	20 §	200m	6 5	40	175J	DO4∅
59#	ZX43	5	43	25 ∅	10	45	8.0	150J	M41
60#	4335	10∅	43	30	80m	60		150J	S87
61#	4435	10∅	43	30	80m	6 0		150J	S87
62	1N2827,A,B	xxx	43	50	290m	4 5	9 0	175S	C5a
63	JAN1N2827B,RB	5	43	50	290m	4 5	9 5	150C	C5a
64	1N3328	20	43	50	290m	4 5	9.0	175J	DO5
65	1N3328A	10	43	50	290m	4.5	9 0	175J	DO5
66	1N3328B	5	43	50	290m	4.5	9.0	175J	DO5
67	JAN1N3328B,RB	5	43	50	290m	4.5	9 5	150	DO5
68	50T43,A,B	xx*	43	50	290m	4 5	9.0		S19e
69	AV51043	5	43	50	290m	4.5	9 0	150C	C5a
70#	BZY91C43	5	43	75 §	500m	1.5	9 2	175J	DO5∅
71#	4535	10∅	43	100	110m	5.0		150J	S84
72#	4635	10∅	43	100	110m	5.0		150J	S84
73#	ZC743	5	43	100 §	25	22	9 0	175J	S125d∅
74	1N1741	5	43 4	1.4	7.5m	140	80	150C	A1kb
75	1N1741A	5	43.4	1 4	7 5m	140	40	150C	A1kb
76	AV2044	∅2	44	1 0	15m	55		150A	A19
77	AV8044	∅2	44	10	150m	7 0		150A	S11
78	AV51044	5	44	50	280m	4.5	9 0	150C	C5a
79	DSZ3045	10	45		15m	37	9.5		A266
80	1/4A45,A,B	xxx	45	25	1.4m	150	9 5	175	DO7
81	1/4M45Z,10,5	xxx	45	250m	1 4m	150	8.9	175J	A1cy
82	.25N45	20	45	25	1 4m	150		250	DO7
83	.7JZ45	†	45	750m	2 9m	100	9 0	175	DO15
84	.7Z45,A,B,D	xxxx	45	750m	2 9m	100	9 0	175	DO27
85	.7Z45C	∅	45	750m	2 9m	100	9 0	175	DO27
86	.7ZM45,A,B,D	xxxx	45	750m	2.9m	100	9 0	175	DO41
87	7ZM45C	∅	45	750m	2 9m	100	9.0	175	DO41
88	1E45Z,10,5	xxx	45	1 0	5 5m	75	9 0	150A	A52g
89#	1S245	10	45	1 0	6 0m	55		150J	A56a
90	AV2045	∅2	45	1 0	15m	76		150A	A19
91	CZ45,A,B,D	xxxx	45	1 0	10m	61	9.0	175	DO15
92	CZ45C	∅	45	1.0	10m	61	9 0	175	DO15
93	JZ45,A,B,D	xxxx	45	1.0	5 5m	75	9 0	175	DO15
94	JZ45C	∅	45	1 0	5 5m	75	9 0	175	DO15
95	TZ45,A,B,D	xxxx	45	1.0	10m	61	9 0	175	DO27
96	TZ45C	∅	45	1 0	10m	61	9 0	175	DO27
97	UZ8745	5	45	1.0	6 0m	75	9.5	175	A146h
98	UZ8845	10	45	1 0	6 0m	75	9.5	175	A146h
99	Z45,A,B,D	xxxx	45	1 0	5 5m	75	9 0	175	DO27
100	Z45C	∅	45	1.0	5.5m	75	9 0	175	DO27
101	ZM45,A,B,D	xxxx	45	1 0	5.7m	75	9.0	175	DO41
102	ZM45C	∅	45	1 0	5.7m	75	9 0	175	DO41
103	1.5JZ45,A,B,D	xxxx	45	1 5	8.5m	50	9.5	175	DO15
104	1.5JZ45C	∅	45	1.5	8 5m	50	9.5	175	DO15
105	1 5Z45,A,B,D	xxxx	45	1.5	8.5m	50	9.5	175	DO27
106	1 5Z45C	∅	45	1 5	8.5m	50	9 5	175	DO27
107	ZBC45	†	45	2 0 §	11m	37		150A	A1bc
108	1N5040	10	45	2 5	14m	30	9 0	150	A1gn
109	1N5040A	5	45	2 5	14m	30	9.0	150	A1gn
110	1N5083	5	45	3.0	15m	37		175A	A146j
111	3TZ45,A,B,D	xxxx	45	3.0	20m	38		175	A1ec
112	3TZ45C	∅	45	3.0	20m	38		175	A1ec
113	CZ5083	10	45	3 0	15m	37	360	175A	A196e
114	MZ745	5	45	3.0	15m	37	9.5	175A	A146j
115	MZ845	10	45	3.0	15m	37	9.5	175A	A146j
116	MZ945	20	45	3.0	15m	37	9.5	175A	A146j
117	UZ745	5	45	3.0	15m	37	9.5	175A	A60
118	UZ845	10	45	3.0	15m	37	9.5	175A	A146f
119	UZ945	20	45	3 0	15m	37	9.5	175A	A60
120	ZCC45	†	45	3.0 §	15m	37		150A	A1ey
121	1N5120	5	45	5 0	30m	20		175A	A146m
122▼	CTZC45,A,B,D∅	xxxx	45	5.0 §	25m	20 ∅	9 0	175A	A1ey
123▼	CTZC45C∅	1	45	5 0 §	25m	20 ∅	9 0	175A	A1ey
124▼	CTZC45E∅	3	45	5.0 §	25m	20 ∅	9.0	175A	A1ey
125	DSZ5745	5	45	5 0	30m	20	9.5	175A	A60r
126	DSZ5845	10	45	5.0	30m	20	9 5	175A	A60r
127	MZ5745	5	45	5 0	30m	20	9 5	175A	A60f
128	MZ5845	10	45	5.0	30m	20	9 5	175A	A60f
129	MZ5945	20	45	5 0	30m	20	9.5	175A	A60f
130▼	TZC45,A,B,D	xxxx	45	5 0 §	25m	20 ∅	9.0	175A	A1ey
131▼	TZC45C	1	45	5.0 §	25m	20 ∅	9.0	175A	A1ey
132▼	TZC45E	3	45	5.0 §	25m	20 ∅	9 0	175A	A1ey
133▼	UZ5745	5	45	5 0	30m	20	9 5	175A	A146m
134♦	UZ5845	10	45	5 0	30m	20	9.5	175A	A146m
135	UZ5945	20	45	5 0	30m	20 ∅	9 5	175A	A146m
136	ZC45	†	45	5 0 §	25m	20		150A	A1ey
137	1N2937	5	45	10 ∅	25m	75		175S	DO4
138	1N2994,A,B	xxx	45	10	55m	13	9.0	175S	DO4
139#	1S287	10	45	10	60m	10		150J	S19g
140	AV8045	∅2	45	10	150m	9.0		150A	S11
141	UZ7745	5	45	10	50m	20	9 5	175	S277∅
142	UZ7845	10	45	10	50m	20	9 5	175	S277∅
143	UZ7945	20	45	10	50m	20	9.5	175	S277∅
144	1N2828,A,B	xxx	45	50	280m	4 5	9.0	175S	C5a
145	1N3329	20	45	50	280m	4.5	9.0	175J	DO5
146	1N3329A	10	45	50	280m	4 5	9.0	175J	DO5
147	1N3329B	5	45	50	280m	4.5	9.0	175J	DO5
148	AV51045	5	45	50	280m	4 5	9.0	150C	C5a
149	1S479	10	46	.25	2.0m	350	9 5	150J	DO7
150#	1S489	10	46	1.0	10m	350	11	150J	A115
151	AV2046	∅2	46	1.0	15m	76		150A	A19
152	IDA1Z46,A,B,C∅	xxxx	46	1 0	20m			200A	A1ht
153#	1S499	10	46	3 0	30m	300	11	150J	S112
154	AV8046	∅2	46	10	150m	9 0		150A	S11
155	AV51046	5	46	50	270m	5.0	9.0	150C	C5a
156	DPZ30-43R	xx†	46 2	300 ∅§	2.0	170m	9.0	175J	S218a
157	1N1994	10	47	150m	200u	500	10	150	C1
158	1N1994A	5	47	150m	200u	500	10	150	C1
159	1N1994B	1	47	150m	200u	500	10	150	C1
160	1N1940,A,B	xx1	47	20	.20m	500	10	150A	A82e
161#	RZ47A	10	47	.20	82m	13	8.6	125A	DO5
162#	ZS47	2	47	20	2.0m	500		140A	C74
163	1/4A47,A,B	xxx	47	.25	1 3m	160	9.5	175	DO7
164	1/4M47Z,10,5	xxx	47	250m	1 3m	160	8.9	175J	A1cy
165	25N47	20	47	.25	1 3m	160		250	DO7
166	1N730,A	xx	47	.25	4 0m	98	9.3	175A	DO7
167	1N730B	20	47	.25	4.0m	98			DO7
168	1N4125	5	47	.25	.25m	250		200J	DO7
169#	MZ47A	10	47	25	2.2m	220	8.6	150A	DO7
170	MC6030,A	xx	47	.30	1.0m	220		175	A2m
171	1N977,A,B	xxx	47	.40	2.7m	105	9 0	175S	DO7
172	JAN1N977B	5	47	.40	2.7m	105	9 5	175A	DO7
173	1N1967	10	47	400m	200u	500 ∅	10		A82g
174	1N3534	5	47	.40	2.0m	150	10	200A	DO7
175	JAN1N4125	5	47	400m	250u	250	9 5	175A	A1sx
176▼	1N5752B	5	47	400m	2.0m	170	8.8	200J	DO35
177#	5536	5	47	.40	5.0m	90	9 5	125A	A1ce
178#	BZX79C47	5	47	400m	2 0m	170	400	200J	A257
179#	BZY94C47	5	47	.40				150J	DO7
180	C6032	10	47	400m	1.0m	150 ∅		175A	M371c
181	C6032A	5	47	400m	1.0m	150 ∅		175A	M371c
182	C6132	10	47	400m	1.0m	150		175A	M131a
183	C6132A	5	47	400m	1.0m	150		175A	M131a
184	CZA47D,10,5	xxx	47	40 ∅	250u	250	9 0	175J	M371
185	CZB47D,10,5	xxx	47	40 ∅	1.3m	160	9.0	175J	M371
186	CZC47D,10,5	xxx	47	40 ∅	2 7m	105	9.0	175J	M371
187	CZD47D,10,5	xxx	47	40 ∅	250u	200	9 0	175J	M451
188	CZE47D,10,5	xxx	47	40 ∅	2.7m	105	9 0	175J	M451
189	HM47,A,B	xxx	47	400m§	2.7m	105		175A	A196c
190	M4Z47,A,-20	xx*	47	40	2 7m	105		150A	A1kk
191	MACZA47D,10,5	xxx	47	.40 ∅	250u	250	9 0	175J	M453
192	MACZB47D,10,5	xxx	47	40 ∅	1.3m	160	9.0	175J	M453

SYMBOLS AND CODES EXPLAINED IN INTERPRETER

2. SILICON REFERENCE DIODES

IN ORDER OF (1) REF. VOLTAGE, (2) DISSIPATION, and (3) TYPE No.

LINE No.	3 TYPE No	TOLERANCE 1 20 10 5 2 ± (%)	NOM REF. VOLT. (V)	2 MAX DISS @ 25°C (W)	TEST CUR Izt (A)	MAX. DYN IMP (Ω)	TEMP COEFF Tc	MAX. TEMP (°C)	DWG. No
1	MACZC47D,10,5	xxx	47	400m∅	2 7m	105	9 0	175J	M453
2	MACZD47D,10,5	xxx	47	40 ∅	250u	200	9 0	175J	M453
3	MACZE47D,10,5	xxx	47	40 ∅	2 7m	105	9.0	175J	M453
4	MBCZA47D,10,5	xxx	47	.40 ∅	250u	250	9 0	175J	M454
5	MBCZB47D,10,5	xxx	47	.40 ∅	1 3m	160	9 0	175J	M454
6	MBCZC47D,10,5	xxx	47	40 ∅	2 7m	105	9.0	175J	M454
7	MBCZD47D,10,5	xxx	47	40 ∅	250u	200	9.0	175J	M454
8	MBCZE47D,10,5	xxx	47	.40 ∅	2 7m	105	9 0	175J	M454
9	MCCZA47D,10,5	xxx	47	40 ∅	250u	250	9 0	175J	M455
10	MCCZB47D,10,5	xxx	47	.40 ∅	1 3m	160	9 0	175J	M455
11	MCCZC47D,10,5	xxx	47	40 ∅	2 7m	105	9.0	175J	M455
12	MCCZD47D,10,5	xxx	47	40 ∅	25Cu	200	9 0	175J	M455
13	MCCZE47D,10,5	xxx	47	.40 ∅	2 7m	105	9 0	175J	M455
14	MDCZA47D,10,5	xxx	47	40 ∅	250u	250	9 0	150A	M410
15	MDCZB47D,10,5	xxx	47	40 ∅	1 3m	160	9 0	150A	M410
16	MDCZC47D,10,5	xxx	47	40 ∅	2 7m	105	9 0	150A	M410
17	MDCZD47D,10,5	xxx	47	.40 ∅	250u	200	9 0	150A	M410
18	MDCZE47D,10,5	xxx	47	.40 ∅	2 7m	105	9 0	150A	M410
19	MZ500-32	10	47	4 §	2 7m	110 ∅	9 5	175J	DO7
20	MZC47A10	†	47	400m§	1 1m	330	9 5	175J	M468
21	MZC47B10	§†	47	400m§	250u	250		175J	M468
22	1/2Z47T5	5	47	50	2 7m	84		175	A94f
23	1N3410∅	10	47	50	1.5m	220	7 0	200A	P5
24	1N3424	10	47	50	1 0m	540	7 3	200A	P5
25	1N5261	20†	47	50	2 7m			200A	DO7
26	1N5261A,B	§∅	47	50	2 7m	105	9 5	200A	DO7
27#	DZ47A	10	47	50	4.3m	130	8 6	150A	A100
28	IDAZ3410,A,B,C∅	xxxx	47	500m	1 5m	220	7 0	200A	A1hc
29	MTZ630,A	xx	47	50	1 0m	220		175A	A60e
30	MZ92-47	†	47	500m§	2 7m		8 8	150J	C103
31	S5261,A,B	xxx	47	500m	2 7m	105	9 5	175	DO41
32#	ZSF47	1	47	500m	7.0m	10	1 0	150S	M487a
33	1N4648	5	47	60	2 7m	1 5k	9 5	200A	DO14
34#	NTO 6C47	5	47	600m	5 0m	90		125J	M498
35	7JZ47	†	47	750m	2 7m	105	9 0	175	DO15
36	7Z47,A,B,D	xxxx	47	750m	2 7m	105	9 0	175	DO27
37	7Z47C	∅	47	750m	2 7m	105	9.0	175	DO27
38	7ZM47,A,B,D	xxxx	47	750m	2 7m	105	9 0	175	DO41
39	7ZM47C	∅	47	750m	2.7m	105	9 0	175	DO41
40	1N3695	20	47	750m	2 7m	105	9 0	175S	A1az
41	1N3695A	10	47	750m	2 7m	105	9 0	175S	A1az
42	1N3695B	5	47	750m	2 7m	105	9 0	175S	A1az
43	MC6130,A	xx	47	75	5.0m	220		175A	A2d
44	MMZ47,A,-20	xx*	47	75	2.7m	105		150A	A1kk
45	1A47M,A,B	xxx	47	1 0	5.5m	80		75A	DO15
46	1E47Z,10,5	xxx	47	1 0	5 5m	80	9 0	150A	A52g
47	1M47Z,10,5	xxx	47	1 0	5 5m	80	9 0	175S	DO1
48	1N1787,A	xx	47	1 0	15m	64		175S	DO13
49	1N1884	10	47	1 0	8 0m	50	7 2	200C	A126
50	1N1884A	5	47	1 0	8.0m	50	7 2	200C	A126
51	1N1884B	1	47	1 0	8.0m	28 △	7 2	175A	DO13
52	1N3036,A,B	xxx	47	1 0	5.5m	80		175A	A31a
53	JAN1N3036B	5	47	1 0	5.5m	80	9 5	175A	A31c
54	1N4178	20	47	1 0	5.5m	80	9 0	175	DO29
55	1N4178A	10	47	1 0	5.5m	80	9 0	175	DO29
56	1N4178B	5	47	1 0	5.5m	80	9 0	175	DO29
57	1N4343,A,B	xxx	47	1 0	5 5m	80	9 0	300S	DO7
58♦	1N4420	20	47	1 0	5.5m	26		175S	A266a
59	1N4420A	10	47	1 0	5.5m	26	9 0	175A	A1cm
60	1N4420B	5	47	1.0	5.5m	26	9 0	175A	A1cm
61	1N4677	5	47	1 0	5.5m	1 0k	9 5	200A	DO15
62	1N4756	10	47	1 0	5.5m	80		200A	A1ay
63	1N4756A	5	47	1 0	5.5m	80		200A	A1ay
64	1N5579	20	47	1 0 §	5.5m			200A	A196d
65	1N5579A	10	47	1 0 §	5.5m	80		200A	A196d
66	1N5579B	5	47	1 0 §	5.5m	80		200A	A196d
67	1N5649		47	1 0	1.0m		10m	175A	DO13
68	1N5649A		47	1 0	1.0m		10m	175A	DO13
69	1R47,A,B	xxx	47	1 0	5.5m	80	9 0	175A	A52c
70#	1S246	10	47	1 0	6.0m	60		150J	A56a
71#	1S3047	xx	47	1 0	5 0m	120	8 5	150	A3
72	1Z47,A,B	xxx	47	1 0	5.5m	80		150	A1ay
73	AV2047	∅2	47	1 0	15m	76		150A	A19
74#	BZX29C47	5	47	1 0	5 0m	80	9 0	175J	A1cd
75#	BZX61C47	5	47	1 0	5.0m	80	8 0	175J	A3y
76	CZ47,A,B,D	xxxx	47	1 0	10m	62	9 0	175	DO15
77	CZ47C	∅	47	1 0	10m	62	9 0	175	DO15
78	EVR47,A,B	xxx	47	1 0	5.0m	110		175A	DO27
79#	EZ47A	10	47	1 0	8.5m	1 5k	8 6		A1em
80	HW47,A,B	xxx	47	1 0	5.5m	80		175	A196
81	JZ47,A,B,D	xxxx	47	1 0	5 5m	80	9 0	175	DO15
82	JZ47C	∅	47	1 0	5 5m	80	9 0	175	DO15
83	LPM47,A,-20	xx*	47	1 0	5 5m	80		150A	A1kk
84	TC47A5A	5△∅	47	1 0	7 5m	100	05	175A	A1ss
85	TZ47,A,B,D	xxxx	47	1 0	10m	62	9 0	175	DO27
86	TZ47C	∅	47	1 0	10m	62	9 0	175	DO27
87	VR47,A,B	xxx	47	1 0	5 5m	80		125A	A1b
88	Z47,A,B,D	xxxx	47	1.0	5.5m	80	9 0	175	DO27
89	Z47C	∅	47	1 0	5.5m	80	9 0	175	DO27
90	ZA47,A,B	xxx	47	1.0	5.5m	80		150C	A1ew
91	ZB47	†	47	1 0 §	5 5m	80		150A	A1bc
92	ZD47∅,A,B	xxx	47	1 0	5.5m	72	9 0	175A	A1cm
93#	ZF47A	10	47	1.0	8 5m	66	8.6	150A	DO13
94	ZH47,A,B	xxx	47	1.0	5 5m	80	9.0	175A	DO1
95	ZM47,A,B,D	xxxx	47	1 0	5.5m	80	9 0	175	DO41
96	ZM47C	∅	47	1 0	5.5m	80	9.0	175	DO41
97#	7736	5	47	1.1	10m	60	9 5	125A	A1bu
98	1N4848,A,B	xxx	47	1 2	5 3m	80	9.5	175	DO29
99#	BZX67C47	5	47	1 3	10m	45	9.0	150J	S287
100#	ZD47#	5	47	1 3	10	45	9 0	150J	DO13
101	ZM47∅	10	47	1 3	10	45	9 0	150J	DO13
102#	ZU47	10	47	1 3	10	45	9.0	150J	A1bg
103#	ZY47	5	47	1 3	10	45	9 0	150J	A1bg
104	1N3805,A,B	xxx	47	1.5	8 0m	55	9.5	175S	C14∅
105	1N4068	5	47	1 5	7 5m	100	.50	100	A1ss
106	1N4068A	5	47	1 5	7.5m	100	.20	100	A1ss
107	1N4481	5	47	1 5	5 5m	50		175A	A196
108	JAN1N4481	10	47	1 5	5 5m	50	9 5	175A	A1v
109#	1S4047,A	xx	47	1 5	5 0m	38	8 5	150A	DO1
110	1 5DKZ47,A,B	xxx	47	1 5	8 0m	55		175A	DO27
111	1.5JZ47	†	47	1.5	8.0m	55	9 5	175	DO15
112	1.5JZ47,A,B,D	xxxx	47	1.5	8.0m	55	9.5	175	DO15
113	1.5JZ47C	∅	47	1 5	8 0m	55	9 5	175	DO15
114	1 5R47,A,B	xxx	47	1 5	8 5m	70	9 0	175A	A179
115	1.5Z47,A,B,D	xxxx	47	1 5	8 0m	55	9 5	175	DO27
116	1 5Z47C	∅	47	1 5	8 0m	55	9 5	175	DO27
117#	BZY95C47	5	47	1.5	10m	50	45	175J	DO1
118	MC6330,A	xx	47	1 5	25m	160			A1q
119	MZ1000-29	10	47	1 5 §	5 5m	120 ∅	9 5	175J	A1ay
120	Z3B470CF	20§∅	47	1.5	20m	51	11	175J	DO1
121	2R47,A,B	xxx	47	2.0	11m	70	9 0	175A	DO27
122	2VR47,A,B	xxx	47	2 0	11m	70			A3e
123	LMZ47,A,-20	xx*	47	2 0	10m	40		150A	A1kk
124	ZBC47	†	47	2 0 §	11m	43		150A	A1bc
125	1N5041	10	47	2 5	13m	33	9.0	150	A1gn
126	1N5041A	5	47	2.5	13m	33	9.0	150	A1gn
127#	BZX70C47	5	47	2 5	10m	50	450	150J	A171b
128	1N5084	5	47	3.0	15m	43		175A	A146j
129	3R47,A,B	xxx	47	3.0	17m	40	9 0	175A	A1rw
130	3TZ47,A,B,D	xxxx	47	3.0	20m	40		175	A1ec
131	3TZ47C	∅	47	3 0	20m	40		175	A1ec
132	3VR47,A,B	xxx	47	3 0	16m	40			A222
133	CZ5084	10	47	3 0	15m	43	370	175A	A196e
134#	FDZ47A	10	47	3 0 ∅	25m	22	8 6	150A	S303
135	M3Z47,A	xx	47	3 0	16m	43		150A	A1kk
136	MZ747	5	47	3 0	15m	43	9 5	175A	A146j
137	MZ847	10	47	3.0	15m	43	9 5	175A	A146j
138	MZ947	20	47	3 0	15m	43	9.5	175A	A146j
139#	NT3C47	5	47	3 0	5.0m	150		125J	S43a
140	ZAC47,A,B	xxx	47	3 0	5.5m	80		150C	A1ey
141	ZCC47	†	47	3.0 §	15m	43		150A	A1ey
142	3T47,A,B	xx*	47	3 5	15m	64			DO4
143#	4GZ47A	10	47	4.0	55m	400	9 0		S19q
144	1N4034,A,B	xxx	47	5.0	27m	20	9 5	180A	S82
145	1N4974	5	47	5.0	25m	25		175A	A146m
146	JAN1N4974	5	47	5.0	25m	25	9 5	175A	A248f
147♦	1N5368	20	47	5.0	25m			200A	A1ee
148▼	1N5368A	10	47	5 0	25m	25		200A	A1ee
149▼	1N5368B	5	47	5 0	25m	25		200A	A1ee
150▼	5ZS47,A,B	xxx	47	5 0 §	25m	25		200A	A1ts
151#	5336	10∅	47	5 0	15m	50		150J	A9h
152▼	CTZC47,A,B,D∅	xxxx	47	5 0 §	25m	25 ∅	9.0	175A	A1ey
153▼	CTZC47C∅	1	47	5 0 §	25m	25 ∅	9 0	175A	A1ey
154▼	CTZC47E∅	3	47	5 0 §	25m	25 ∅	9 0	175A	A1ey
155	HZ47	10	47	5.0	22m	7 0	5.0	165C	M221
156▼	TZC47,A,B,D	xxxx	47	5.0 §	25m	25 ∅	9 0	175A	A1ey
157▼	TZC47C	1	47	5 0 §	25m	25 ∅	9.0	175A	A1ey
158▼	TZC47E	3	47	5 0 §	25m	25 ∅	9.0	175A	A1ey
159	ZC47	†	47	5 0 §	25m	25		150A	A1ey
160#	KR56	10	47	8.0	50m	8.0	9 8	150A	S186
161	UZ4747	5	47	8.0	25m	25		175A	A146m
162	UZ4847	10	47	8 0	25m	25		175A	A146m
163	1N1367,A	xx	47	10	150m	7 0		175A	DO4
164	1N1367B	20	47	10	150m	7.0			S11e
165	1N1367C,CA∅	xx	47	10 §	15	7 0		175J	S19a
166	1N1829	10	47	10	150m	7 0	9 0	150A	S19a
167	1N1829A	5	47	10	150m	7.0	9.0	150A	S19a
168	1N1829C,CA∅	xx	47	10	150m	7 0	9 0	150A	S19a
169	1N1900	10	47	10	8 0m	50	7 2	200A	S82
170	1N1900A	5	47	10	8.0m	50	7 2	200A	S82
171	1N2995,A,B	xxx	47	10	55m	14		175C	DO4∅
172	JAN1N2995B,RB	5	47	10	55m	14	9 5	150C	DO4
173	1N4278	20	47	10	55m	14	9 0	175C	S134
174	1N4278A	10	47	10	55m	14	9 0	175C	S134
175	1N4278B	5	47	10	55m	14	9 0	175C	S134
176	JAN1N4278B	5	47	10 §	55m	14	9.5	175S	S134a
177#	1S288	10	47	10	60m	10		150J	S19g
178#	1S5047,A	xx	47	10	50m	10	9 0	150C	DO4
179#	1S5047C∅	10	47	10	50m	10	9 0	150C	DO4
180#	1S6047	10	47	10	50m	10	7 0	150	DO4
181#	1S6047A	5	47	10	50m	10	7 0	150	DO4
182	10PZ47,A,B,D	xxxx	47	10	55m	14	9.0	175	DO4
183	10PZ47C	∅	47	10	55m	14	9.0	175	DO4
184	10RZ47,A,B,D	xxxx	47	10	150m	7 0	9 0	155	DO4
185	10RZ47C	∅	47	10	150m	7 0	9 0	155	DO4

SYMBOLS AND CODES EXPLAINED IN INTERPRETER

2. SILICON REFERENCE DIODES

IN ORDER OF (1) REF. VOLTAGE, (2) DISSIPATION, and (3) TYPE No.

LINE No	3 TYPE No	TOLERANCE 1 (20 10 5 2) ± (%)	NOM REF VOLT. (V)	2 MAX. DISS. @ 25°C (W)	TEST CUR. Izt (A)	MAX DYN IMP. (Ω)	TEMP. COEFF Tc	MAX. TEMP (°C)	DWG. No.
1	AV8047	Ø2	47	10	150m	9 0		150A	S11
2#	GZ47A	10	47	10 ☑	43m	13	8 6	150A	DO4
3#	PZ47A	10	47	10 ☑	43m	13	8 6	150A	S95a
4#	Z5D470CF	20§Ø	47	10	50m	10	9 5	150J	DO4
5#	ZC5047	5	47	10	50m	10	8 6	150A	S19
6#	ZD5047	10	47	10	50m	10	8.6	150A	S19
7#	4136	10Ø	47	15	80m	6 0		150J	S87
8#	4236	10Ø	47	15	80m	6 0		150J	S87
9#	BZY93C47	5	47	20 §	200m	7 0	45	175J	DO4☑
10#	SZ47B	5	47	25	100m	6 0	9 0	150B	S16
11#	ZL47	10	47	25 ☑	10	45	9 0	150J	M41
12#	ZX47	5	47	25 ☑	10	45	9 0	150J	M41
13#	4336	10Ø	47	30	80m	6 0		150J	S87
14#	4436	10Ø	47	30	80m	6.0		150J	S87
15	1N2829,A,B	xxx	47	50	270m	5 0	9 0	175S	C5a
16	JAN1N2829B,RB	5	47	50	270m	5 0	9 5	150C	C5a
17	1N3330	20	47	50	270m	5 0	9 0	175J	DO5
18	1N3330A	10	47	50	270m	5 0	9 0	175J	DO5
19	1N3330B	5	47	50	270m	5 0	9 0	175J	DO5
20	JAN1N3330B,RB	5	47	50	270m	5 0	9 5	150	DO5
21	50T47,A,B	xx*	47	50	270m	5 0	9 0		S19e
22	AV51047	5	47	50	270m	5 0	9 0	150C	C5a
23	75TE47,A	xx	47	75 ☑	210m	21m	1 0	125C	TO36
24#	BZY91C47	5	47	75 §	500m	1 7	9 3	175J	DO5☑
25	80TF47,A	xx	47	80	210m	21m	1 0	125C	M117c
26#	4536	10Ø	47	100	110m	5 0		150J	S84
27#	4636	10Ø	47	100	110m	5 0		150J	S84
28#	ZC747	5	47	100 §	25	25	9 1	175J	S125d☑
29	HRE48	5	48		10m	70	50	70A	A126a
30	HRE48A	5	48		10m	70	50	125A	A126a
31	1N234Ø	10	48	150m	200u			150A	C1
32	1N234AØ	5	48	150m	200u			150A	C1
33	IDAZ234,A,B,CØ	xxxx	48	150m	200u	220	7.0	150A	A1hc
34	AV12	10	48	1 0	15m	76		150A	A19
35	AV2048	Ø2	48	1 0	15m	76		150A	A19
36	AV112	10	48	10	150m	9 0		150A	S11
37	AV8048	Ø2	48	10	150m	9 0		150A	S11
38	AV51048	5	48	50	260m	5 0	9 0	150C	C5a
39	DPZ30-45R	xx†	48 3	300 ☑§	1 9	180m	9 0	175J	S218a
40	1N1322,A	xx	48 5	15	20m		11	150A	C1
41	PS6322	15	48 5	50		20		200A	DO14
42	AV2049	Ø2	49	1 0	15m	76		150A	A19
43	AV8049	Ø2	49	10	150m	9 0		150A	S11
44	AV51049	5	49	50	260m	5.0	9 0	150C	C5a
45	1N1742	5	49 6	1 6	7.5m	160	80	150C	A1kb
46	1N1742A	5	49.6	1 6	7.5m	60	40	150C	A1kb
47	JAN1N1742A	5	49.6	1 6	7 5m	160	50	150	A1kb
48	DSZ3050	10	50		15m	50	9 5		A266
49	1/4A50,A,B	xxx	50	.25	1 2m	180	9 5	175	DO7
50	1/4M50Z,10,5	xxx	50	250m	1 2m	180	9.0	175J	A1cy
51	25N50	20	50	25	1 2m	180		250	DO7
52	7JZ50	†	50	750m	2 6m	120	9.0	175	DO15
53	.7Z50,A,B,D	xxxx	50	750m	2 6m	120	9 0	175	DO27
54	.7Z50C	☑	50	750m	2 6m	120	9 0	175	DO27
55	7ZM50,A,B,D	xxxx	50	750m	2 6m	120	9 0	175	DO41
56	7ZM50C	☑	50	750m	2.6m	120	9 0	175	DO41
57	1E50Z,10,5	xxx	50	1 0	5 0m	90	9.0	150A	A52g
58#	1S247	10	50	1.0	6 0m	65		150J	A56a
59	AV2050	Ø2	50	1.0	15m	76		150A	A19
60	CZ50,A,B,D	xxxx	50	1.0	10m	63	9 0	175	DO15
61	CZ50C	☑	50	1 0	10m	63	9 0	175	DO15
62	EVR50,A,B	xxx	50	1 0	5 0m	125		175A	DO27
63	JZ50,A,B,D	xxxx	50	1 0	5 0m	90	9 0	175	DO15
64	JZ50C	☑	50	1 0	5 0m	90	9 0	175	DO15
65	TZ50,A,B,D	xxxx	50	1.0	10m	63	9.0	175	DO27
66	TZ50C	☑	50	1 0	10m	63	9 0	175	DO27
67	UZ8750	5	50	1 0	5 0m	85	9 5	175	A146h
68	UZ8850	10	50	1 0	5.0m	85	9 5	175	A146h
69	Z50,A,B,D	xxxx	50	1 0	5 0m	90	9.0	175	DO27
70	Z50C	☑	50	1.0	5 0m	90	9 0	175	DO27
71	ZM50,A,B,D	xxxx	50	1 0	5 2m	90	9.0	175	DO41
72	ZM50C	☑	50	1 0	5.2m	90	9.0	175	DO41
73	1 5JZ50,A,B,D	xxxx	50	1 5	8 0m	60	9 6	175	DO15
74	1 5JZ50C	☑	50	1.5	8.0m	60	9.6	175	DO15
75	1 5Z50,A,B,D	xxxx	50	1 5	8.0m	60	9.6	175	DO27
76	1 5Z50C	☑	50	1.5	8 0m	60	9 6	175	DO27
77	ZBC50	†	50	2 0 §	10m	50		150A	A1bc
78	1N5042	10	50	2 5	12m	36	9 0	150	A1gn
79	1N5042A	5	50	2 5	12m	36	9.0	150	A1gn
80	1N4321	10	50	3.0	15m	50		175S	A60
81	1N5085	5	50	3 0	15m	50		175A	A146j
82	3TZ50,A,B,D	xxxx	50	3 0	20m	43		175	A1ec
83	3TZ50C	☑	50	3 0	20m	43		175	A1ec
84	CZ5085	10	50	3.0	15m	50	500	175A	A196e
85	MZ750	5	50	3 0	15m	50	9.5	175A	A146j
86	MZ850	10	50	3.0	15m	50	9 5	175A	A146j
87	MZ950	20	50	3 0	15m	50	9 5	175A	A146j
88	UZ750	5	50	3 0	15m	50	9 5	175A	A60
89	UZ850	10	50	3.0	15m	50	9 5	175A	A146f
90	UZ950	20	50	3.0	15m	50	9.5	175A	A60
91	ZCC50	†	50	3.0 §	15m	50		150A	A1ey
92	1N5121	5	50	5.0	25m	25		175A	A146m
93▼	CTZC50,A,B,DØ	xxxx	50	5 0 §	25m	25 Ø	9 0	175A	A1ey
94▼	CTZC50CØ	1	50	5 0 §	25m	25 Ø	9 0	175A	A1ey
95▼	CTZC50EØ	3	50	5 0 §	25m	25 Ø	9 0	175A	A1ey
96	DSZ5750	5	50	5 0	25m	25	9 5	175A	A60r
97	DSZ5850	10	50	5 0	25m	25	9 5	175A	A60r
98	MZ5750	5	50	5 0	25m	25	9.5	175A	A60f
99	MZ5850	10	50	5 0	25m	25	9 5	175A	A60f
100	MZ5950	20	50	5 0	25m	25	9 5	175A	A60f
101▼	TZC50,A,B,D	xxxx	50	5.0 §	25m	25 Ø	9 0	175A	A1ey
102▼	TZC50C	1	50	5 0 §	25m	25 Ø	9 0	175A	A1ey
103▼	TZC50E	3	50	5 0 §	25m	25 Ø	9.0	175A	A1ey
104▼	UZ5750	5	50	5 0	25m	25	9.5	175A	A146m
105♦	UZ5850	10	50	5 0	25m	25	9.5	175A	A146m
106	UZ5950	20	50	5 0	25m	25 Ø	9 5	175A	A146m
107	ZC50	†	50	5 0 §	25m	25		150A	A1ey
108	1N2996,A,B	xxx	50	10	50m	15	9.0	175S	DO4
109#	1S289	10	50	10	60m	11		150J	S19g
110	AV8050	Ø2	50	10	150m	9 0		150A	S11
111	UZ7750	5	50	10	50m	22	9.5	175	S277☑
112	UZ7850	10	50	10	50m	22	9 5	175	S277☑
113	UZ7950	20	50	10	50m	22	9.5	175	S277☑
114	1N2830,A,B	xxx	50	50	250m	5.0	9.0	175S	C5a
115	1N3331	20	50	50	250m	5.0	9 0	175J	DO5
116	1N3331A	10	50	50	250m	5 0	9 0	175J	DO5
117	1N3331B	5	50	50	250m	5 0	9.0	175J	DO5
118	AV51050	5	50	50	250m	5.0	9.0	150C	C5a
119	PS1506	5	50 4	.25	10m	90	.20	150A	A1gc
120	PS1506A	5	50.4	.25	10m	90	.10	150A	A1gc
121	HRE50.5	5	50.5		10m	75	50	70A	A129
122	HRE50.5A	5	50 5		10m	75	.50	125A	A129
123	DPZ30-47R	xx†	50.5	300 ☑§	1 8	190m	9.0	175J	S218a
124	1/4M51Z,10,5	xxx	51	250m	1 2m	190	9.0	175J	A1cy
125	1N731,A	xx	51	.25	4 0m	115	9 5	175A	DO7
126	1N731B	20	51	.25	4.0m	115			DO7
127	1N4126	5	51	.25	.25m	300		200J	DO7
128	1N978,A,B	xxx	51	.40	2 5m	125	9.0	175S	DO7
129	JAN1N978B	5	51	40	2 5m	125	9 6	175A	DO7
130	JAN1N4126	5	51	400m	250u	300	10	175A	A1sx
131▼	1N5753B	5	51	400m	2.0m	180	8.6	200J	DO35
132#	5537	5	51	40	5 0m	110	9.5	125A	A1ce
133#	BZX79C51	5	51	400m	2 0m	180	440	200J	A257
134#	BZY94C51	5	51	.40				150J	DO7
135	CD3168	5	51	.40	2.0m	180 Ø	10	200	A1ce
136	CZA51D,10,5	xxx	51	.40 ☑	250u	300	9.0	175J	M371
137	CZB51D,10,5	xxx	51	40 ☑	1 2m	190	9 0	175J	M371
138	CZC51D,10,5	xxx	51	40 ☑	2 5m	125	9.0	175J	M371
139	CZD51D,10,5	xxx	51	.40 ☑	250u	300	9.0	175J	M451
140	CZE51D,10,5	xxx	51	.40 ☑	2.5m	125	9.0	175J	M451
141	HM51,A,B	xxx	51	400m§	2.5m	125		175A	A196c
142	M4Z51,A,-20	xx*	51	.40	2.5m	125		150A	A1kk
143	MACZA51D,10,5	xxx	51	.40 ☑	250u	300	9.0	175J	M453
144	MACZB51D,10,5	xxx	51	40 ☑	1.2m	190	9 0	175J	M453
145	MACZC51D,10,5	xxx	51	40 ☑	2 5m	125	9 0	175J	M453
146	MACZD51D,10,5	xxx	51	.40 ☑	250u	300	9.0	175J	M453
147	MACZE51D,10,5	xxx	51	.40 ☑	2 5m	125	9.0	175J	M453
148	MBCZA51D,10,5	xxx	51	.40 ☑	250u	300	9.0	175J	M454
149	MBCZB51D,10,5	xxx	51	.40 ☑	1 2m	190	9.0	175J	M454
150	MBCZC51D,10,5	xxx	51	40 ☑	2.5m	125	9.0	175J	M454
151	MBCZD51D,10,5	xxx	51	40 ☑	250u	300	9 0	175J	M454
152	MBCZE51D,10,5	xxx	51	40 ☑	2.5m	125	9 0	175J	M454
153	MCCZA51D,10,5	xxx	51	40 ☑	250u	300	9 0	175J	M455
154	MCCZB51D,10,5	xxx	51	40 ☑	1.2m	190	9.0	175J	M455
155	MCCZC51D,10,5	xxx	51	40 ☑	2 5m	125	9.0	175J	M455
156	MCCZD51D,10,5	xxx	51	40 ☑	250u	300	9.0	175J	M455
157	MCCZE51D,10,5	xxx	51	40 ☑	2.5m	125	9.0	175J	M455
158	MDCZA51D,10,5	xxx	51	.40 ☑	250u	300	9.0	150A	M410
159	MDCZB51D,10,5	xxx	51	40 ☑	1.2m	190	9 0	150A	M410
160	MDCZC51D,10,5	xxx	51	40 ☑	2.5m	125	9.0	150A	M410
161	MDCZD51D,10,5	xxx	51	.40 ☑	250u	300	9 0	150A	M410
162	MDCZE51D,10,5	xxx	51	40 ☑	2.5m	125	9 0	150A	M410
163	MZ500-33	10	51	4 §	2.5m	130 Ø	9.6	175J	DO7
164	MZC51A10	†	51	400m§	980u	390	9 6	175J	M468
165	MZC51B10	§†	51	400m§	250u	300		175J	M468
166	1/2Z51T5	5	51	50	2 5m	100		175	A94f
167	1N5262	20†	51	50	2.5m			200A	DO7
168	1N5262A,B	§Ø	51	.50	2.5m	125	9.6	200A	DO7
169	MZ92-51	†	51	500m§	2 5m		8 9	150J	C103
170	S5262,A,B	xxx	51	500m	2 5m	125	9 6	175	DO41
171#	ZSF51	1	51	500m	7.0m	10	1 0	150S	M487a
172#	NTO 6C51	5	51	600m	5.0m	110		125J	M498
173	.7JZ51	†	51	750m	2.5m	125	9 0	175	DO15
174	7Z51,A,B,D	xxxx	51	750m	2.5m	125	9 0	175	DO27
175	7Z51C	☑	51	750m	2 5m	125	9 0	175	DO27
176	7ZM51,A,B,D	xxxx	51	750m	2.5m	125	9 0	175	DO41
177	7ZM51C	☑	51	750m	2 5m	125	9 0	175	DO41
178	1N3696	20	51	750m	2.5m	125	9 0	175S	A1az
179	1N3696A	10	51	750m	2 5m	125	9 0	175S	A1az
180	1N3696B	5	51	750m	2.5m	125	9 0	175S	A1az

SYMBOLS AND CODES EXPLAINED IN INTERPRETER

2. SILICON REFERENCE DIODES

IN ORDER OF (1) REF. VOLTAGE, (2) DISSIPATION, and (3) TYPE No.

LINE No.	TYPE No.	TOLERANCE 20 10 5 2 ± (%)	NOM. REF. VOLT (V)	MAX DISS. @ 25°C (W)	TEST CUR. Izt (A)	MAX. DYN. IMP. (Ω)	TEMP COEFF Tc	MAX. TEMP (°C)	DWG. No.
1	MMZ51,A,-20	xx*	51	75	2.5m	125		150A	A1kk
2	1A51M,A,B	xxx	51	1 0	5 0m	95		75A	DO15
3	1E51Z,10,5	xxx	51	1 0	5.0m	95	9 0	150A	A52g
4	1M51Z,10,5	xxx	51	1 0	5.0m	95	9 0	175A	DO1
5	1N1788,A	xx	51	1.0	15m	74		175S	DO13
6	1N3037,A,B	xxx	51	1 0	5 0m	95		175A	A31a
7	JAN1N3037B	5	51	1 0	5 0m	95	9 6	175A	A31c
8	1N4179	20	51	1 0	5 0m	95	9 0	175	DO29
9	1N4179A	10	51	1 0	5 0m	95	9 0	175	DO29
10	1N4179B	5	51	1 0	5 0m	95	9 0	175	DO29
11	1N4344,A,B	xxx	51	1 0	5 0m	95	9 0	300S	DO7
12▼	1N4421	20	51	1 0	5.0m	30		175S	A266a
13	1N4757	10	51	1 0	5 0m	95		200A	A1ay
14	1N4757A	5	51	1 0	5 0m	95		200A	A1ay
15	1N5580	20	51	1 0 §	5 0m			200A	A196d
16	1N5580A	10	51	1 0 §	5 0m	95		200A	A196d
17	1N5580B	5	51	1.0 §	5 0m	95		200A	A196d
18	1N5650		51	1 0	1 0m		10m	175A	DO13
19	1N5650A		51	1 0	1.0m		10m	175A	DO13
20	1R51,A,B	xxx	51	1 0	5.0m	95	9 0	175A	A52c
21#	1S3051	xx	51	1.0	5 0m	150	8 5	150	A3
22	1Z51,A,B	xxx	51	1 0	5.0m	95		150	A1ay
23	AV2051	Ø2	51	1 0	15m	76		150A	A19
24#	BZX29C51	5	51	1 0	5 0m	95	9 0	175J	A1cd
25#	BZX61C51	5	51	1 0	5 0m	95	8 0	175J	A3y
26	CZ51,A,B,D	xxxx	51	1 0	10m	64	9 0	175	DO15
27	CZ51C	∅	51	1.0	10m	64	9.0	175	DO15
28	HW51,A,B	xxx	51	1 0	5 0m	95		175	A196
29	JZ51,A,B,D	xxxx	51	1 0	5 0m	95	9 0	175	DO15
30	JZ51C	∅	51	1 0	5 0m	95	9 0	175	DO15
31	LPM51,A,-20	xx*	51	1 0	5 0m	95		150A	A1kk
32	TC51A5B	5△∅	51	1 0	7 5m	110	05	175A	A1nj
33	TZ51,A,B,D	xxxx	51	1 0	10m	64	9 0	175	DO27
34	TZ51C	∅	51	1 0	10m	64	9 0	175	DO27
35	VR51,A,B	xxx	51	1 0	5 0m	95		125A	A1b
36	Z51,A,B,D	xxxx	51	1 0	5 0m	95	9 0	175	DO27
37	Z51C	∅	51	1 0	5 0m	95	9 0	175	DO27
38	ZA51,A,B	xxx	51	1 0	5 0m	95		150C	A1ew
39	ZB51	†	51	1 0 §	5 0m	95		150A	A1bc
40	ZD51∅,A,B	xxx	51	1 0	5 0m	90	9 0	175A	A1cm
41	ZH51,A,B	xxx	51	1 0	5 0m	95	9 0	175A	DO1
42	ZM51,A,B,D	xxxx	51	1 0	5 0m	95	9 0	175	DO41
43	ZM51C	∅	51	1 0	5 0m	95	9 0	175	DO41
44#	7737	5	51	1 1	10m	80	9 5	125A	A1bu
45	1N4849,A,B	xxx	51	1 2	5 0m	95	9 6	175	DO29
46#	BZX67C51	5	51	1 3	10m	60	9 0	150J	S287
47#	ZD51#	5	51	1 3	10	60	9 0	150J	DO13
48#	ZY51	5	51	1 3	10	60	9 0	150J	A1bg
49	1N3806,A,B	xxx	51	1 5	7.4m	65	9 6	175S	C14∅
50	1N4482	5	51	1 5	5 0m	60		175A	A196
51	JAN1N4482	10	51	1 5	5 0m	60	9 6	175A	A1v
52#	1S4051,A	xx	51	1 5	5 0m	41	8 5	150A	DO1
53	1 5DKZ51,A,B	xxx	51	1 5	7 4m	65		175A	DO27
54	1 5JZ51,A,B,D	xxxx	51	1 5	7 4m	65	9 6	175	DO15
55	1 5JZ51C	∅	51	1.5	7 4m	65	9 6	175	DO15
56	1 5R51,A,B	xxx	51	1.5	7 5m	80	9 0	175A	A52c
57	1 5Z51,A,B,D	xxxx	51	1 5	7 4m	65	9 6	175	DO27
58	1 5Z51C	∅	51	1 5	7 4m	65	9 6	175	DO27
59#	BZY95C51	5	51	1 5	10m	55	50	175J	DO1
60	MZ1000-30	10	51	1.5 §	5 0m	143 ∅	9 6	175J	A1ay
61#	Z3B510CF	20§∅	51	1 5	20m	59	11	175J	DO1
62	1N4069	5	51	2 0	7 5m	110	50	100	A1nj
63	1N4069A	5	51	2 0	7 5m	110	20	100	A1nj
64	2R51,A,B	xxx	51	2 0	9 8m	80	9 0	175A	DO27
65	2VR51,A,B	xxx	51	2.0	9 8m	80			A3e
66	LMZ51,A,-20	xx*	51	2 0	10m	45		150A	A1kk
67	ZBC51	†	51	2 0 §	10m	50		150A	A1bc
68	1N5043	10	51	2 5	12m	36	9 0	150	A1gn
69	1N5043A	5	51	2 5	12m	36	9 0	150	A1gn
70#	BZX70C51	5	51	2 5	10m	55	500	150J	A171b
71	1N5086	5	51	3 0	15m	50		175A	A146j
72	3R51,A,B	xxx	51	3 0	15m	45	9 0	175A	A1rw
73	3TZ51,A,B,D	xxxx	51	3.0	20m	45		175	A1ec
74	3TZ51C	∅	51	3 0	20m	45		175	A1ec
75	3VR51,A,B	xxx	51	3 0	15m	45			A222
76	CZ5086	10	51	3 0	15m	50	510	175A	A196e
77	M3Z51,A	xx	51	3 0	15m	51		150A	A1kk
78	MZ751	5	51	3.0	15m	50	9 5	175A	A146j
79	MZ851	10	51	3 0	15m	50	9 5	175A	A146j
80	MZ951	20	51	3 0	15m	50	9 5	175A	A146j
81#	NT3C51	5	51	3 0	5 0m	150		125J	S43a
82	ZAC51,A,B	xxx	51	3 0	5 0m	95		150C	A1ey
83	ZCC51	†	51	3 0 §	15m	50		150A	A1ey
84	3T51,A,B	xx*	51	3 5	15m	74			DO4
85	1N4035,A,B	xxx	51	5 0	25m	25	9 6	180A	S82
86	1N4975	5	51	5 0	25m	27		175A	A146m
87	JAN1N4975	5	51	5 0	25m	27	9 5	175A	A248f
88♦	1N5369	20	51	5 0	25m			200A	A1ee
89▼	1N5369A	10	51	5 0	25m	27		200A	A1ee
90▼	1N5369B	5	51	5 0	25m	27		200A	A1ee
91▼	5ZS51,A,B	xxx	51	5 0 §	25m	27		200A	A1ts
92#	5337	10∅	51	5 0	10m	80		150J	A9h
93▼	CTZC51,A,B,D∅	xxxx	51	5 0 §	25m	27 ∅	9 0	175A	A1ey
94▼	CTZC51C∅	1	51	5 0 §	25m	27 ∅	9 0	175A	A1ey
95▼	CTZC51E∅	3	51	5 0 §	25m	27 ∅	9 0	175A	A1ey
96▼	TZC51,A,B,D	xxxx	51	5 0 §	25m	27 ∅	9.0	175A	A1ey
97▼	TZC51C	1	51	5 0 §	25m	27 ∅	9 0	175A	A1ey
98▼	TZC51E	3	51	5 0 §	25m	27 ∅	9 0	175A	A1ey
99	ZC51	†	51	5 0 §	25m	27		150A	A1ey
100	UZ4751	5	51	8 0	25m	27		175A	A146m
101	UZ4851	10	51	8 0	25m	27		175A	A146m
102	1N1368,A	xx	51	10	150m	8 0		175A	DO4
103	1N1368B	20	51	10	150m	8 0			S11e
104	1N1368C,CA∅	xx	51	10 §	15	8 0		175J	S19a
105	1N1830	10	51	10	150m	8 0	10	150A	S19a
106	1N1830A	5	51	10	150m	8 0	10	150A	S19a
107	1N1830C,CA∅	xx	51	10	150m	8 0	10	150A	S19a
108	1N2997,A,B	xxx	51	10	50m	15		175C	DO4∅
109	JAN1N2997B,RB	5	51	10	50m	15	9.6	150C	DO4
110	1N4279	20	51	10	50m	15	9 0	175C	S134
111	1N4279A	10	51	10	50m	15	9 0	175C	S134
112	1N4279B	5	51	10	50m	15	9 0	175C	S134
113	JAN1N4279B	5	51	10 §	50m	15	9 6	175S	S134a
114#	1S5051,A	xx	51	10	50m	10	10	150C	DO4
115#	1S5051C∅	10	51	10	50m	10	10	150C	DO4
116#	1S6051	10	51	10	50m	10	8 0	150	DO4
117#	1S6051A	5	51	10	50m	10	8 0	150	DO4
118	10PZ51,A,B,D	xxxx	51	10	50m	15	9.0	175	DO4
119	10PZ51C	∅	51	10	50m	15	9 0	175	DO4
120	10RZ51,A,B,D	xxxx	51	10	150m	8.0	10	155	DO4
121	10RZ51C	∅	51	10	150m	8 0	10	155	DO4
122	AV8051	Ø2	51	10	150m	9 0		150A	S11
123#	Z5D510CF	20§∅	51	10	50m	10	9 5	150J	DO4
124#	ZC5051	5	51	10	50m	10	8 7	150A	S19
125#	ZD5051	10	51	10	50m	10	8.7	150A	S19
126#	4137	10∅	51	15	60m	9 0		150J	S87
127#	4237	10∅	51	15	60m	9.0		150J	S87
128#	BZY93C51	5	51	20 §	200m	7 5	50	175J	DO4∅
129#	ZX51	5	51	25 ∅	10	60	9 0	150J	M41
130#	4337	10∅	51	30	60m	9 0		150J	S87
131#	4437	10∅	51	30	60m	9 0		150J	S87
132	1N2831,A,B	xxx	51	50	245m	5 2	9 0	175S	C5a
133	JAN1N2831B,RB	5	51	50	245m	5 2	9 6	150C	C5a
134	1N3332	20	51	50	245m	5.2	9 0	175J	DO5
135	1N3332A	10	51	50	245m	5 2	9 0	175J	DO5
136	1N3332B	5	51	50	245m	5 2	9.0	175J	DO5
137	JAN1N3332B,RB	5	51	50	245m	5 2	9 6	150	DO5
138	50T51,A,B	xx*	51	50	240m	5 2	9 0		S19e
139	AV51051	5	51	50	245m	5 2	9 0	150C	C5a
140#	BZY91C51	5	51	75 §	500m	1.8	9 3	175J	DO5∅
141#	4537	10∅	51	100	90m	8 0		150J	S84
142#	4637	10∅	51	100	90m	8.0		150J	S84
143#	ZC751	5	51	100 §	25	30	9 1	175J	S125d∅
144	1/4A52,A,B	xxx	52	25	1 2m	200	9.5	175	DO7
145	1/4M52Z,10,5	xxx	52	250m	1 2m	200	9 0	175J	A1cy
146	25N52	20	52	25	1 2m	200		250	DO7
147	7JZ52	†	52	750m	2 4m	135	9 0	175	DO15
148	7Z52,A,B,D	xxxx	52	750m	2 4m	135	9.0	175	DO27
149	7Z52C	∅	52	750m	2 4m	135	9 0	175	DO27
150	7ZM52,A,B,D	xxxx	52	750m	2 4m	135	9 0	175	DO41
151	7ZM52C	∅	52	750m	2.4m	135	9 0	175	DO41
152	1E52Z,10,5	xxx	52	1 0	5 0m	100	9 0	150A	A52g
153#	1S248	10	52	1 0	6 0m	70		150J	A56a
154	AV2052	Ø2	52	1 0	15m	76		150A	A19
155	CZ52,A,B,D	xxxx	52	1 0	10m	65	9.0	175	DO15
156	CZ52C	∅	52	1 0	10m	65	9 0	175	DO15
157	IDA1Z52,A,B,C∅	xxxx	52	1 0	18m			200A	A1ht
158	JZ52,A,B,D	xxxx	52	1 0	5 0m	100	9 0	175	DO15
159	JZ52C	∅	52	1 0	5 0m	100	9 0	175	DO15
160	TZ52,A,B,D	xxxx	52	1 0	10m	65	9.0	175	DO27
161	TZ52C	∅	52	1 0	10m	65	9.0	175	DO27
162	Z52,A,B,D	xxxx	52	1 0	5.0m	100	9 0	175	DO27
163	Z52C	∅	52	1 0	5.0m	100	9 0	175	DO27
164	ZM52,A,B,D	xxxx	52	1 0	4 7m	100	9.0	175	DO41
165	ZM52C	∅	52	1 0	4 7m	100	9.0	175	DO41
166	1.5JZ52,A,B,D	xxxx	52	1.5	7 0m	70	9 6	175	DO15
167	1 5JZ52C	∅	52	1 5	7 0m	70	9.6	175	DO15
168	1.5Z52,A,B,D	xxxx	52	1 5	7.0m	70	9 6	175	DO27
169	1 5Z52C	∅	52	1 5	7.0m	70	9.6	175	DO27
170	ZBC52	†	52	2 0 §	9 0m	60		150A	A1bc
171	1N5044	10	52	2 5	12m	39	9 0	150	A1gn
172	1N5044A	5	52	2 5	12m	39	9.0	150	A1gn
173	3TZ52,A,B,D	xxxx	52	3 0	20m	47		175	A1ec
174	3TZ52C	∅	52	3 0	20m	47		175	A1ec
175	ZCC52	†	52	3 0 §	15m	60		150A	A1ey
176▼	CTZC52,A,B,D∅	xxxx	52	5 0 §	23m	30 ∅	9.0	175A	A1ey
177▼	CTZC52C∅	1	52	5 0 §	23m	30 ∅	9 0	175A	A1ey
178▼	CTZC52E∅	3	52	5.0 §	23m	30 ∅	9 0	175A	A1ey
179▼	TZC52,A,B,D	xxxx	52	5 0 §	23m	30 ∅	9 0	175A	A1ey
180▼	TZC52C	1	52	5 0 §	23m	30 ∅	9 0	175A	A1ey
181▼	TZC52E	3	52	5 0 §	23m	30 ∅	9 0	175A	A1ey
182	ZC52	†	52	5 0 §	23m	30		150A	A1ey
183	1N2998,A,B	xxx	52	10	50m	15	9 0	175S	DO4
184#	1S290	10	52	10	60m	12		150J	S19g
185	AV8052	Ø2	52	10	150m	9 0		150A	S11
186	1N3333	20	52	50	240m	5 5	9 0	175J	DO5
187	1N3333A	10	52	50	240m	5 5	9 0	175J	DO5
188	1N3333B	5	52	50	240m	5 5	9 0	175J	DO5
189	AV51052	5	52	50	240m	5 2	9 0	150C	C5a
190	AV2053	Ø2	53	1.0	5 0m	107		150A	A19
191	AV8053	Ø2	53	10	50m	12		150A	S11
192	AV51053	5	53	50	235m	5 5	9.0	150C	C5a
193	HRE53 5	5	53.5		10m	80	50	70A	A129
194	HRE53.5A	5	53 5		10m	80	.50	125A	A129
195	DPZ30-50R	xx†	53 7	300 ∅§	1 7	200m	9 0	175J	S218a

SYMBOLS AND CODES EXPLAINED IN INTERPRETER

2. SILICON REFERENCE DIODES

IN ORDER OF (1) REF. VOLTAGE, (2) DISSIPATION, and (3) TYPE No.

LINE No.	3 TYPE No.	TOLERANCE 1 20 10 5 2 ± (%)	NOM. REF. VOLT (V)	2 MAX DISS. @ 25°C (W)	TEST CUR. Izt (A)	MAX. DYN. IMP. (Ω)	TEMP COEFF Tc	MAX. TEMP (°C)	DWG. No
1	AV2054	Ø2	54	1 0	5 0m	107		150A	A19
2	AV8054	Ø2	54	10	50m	12		150A	S11
3	AV51054	5	54	50	230m	5 5	9.0	150C	C5a
4	AV2055	Ø2	55	1 0	5.0m	107		150A	A19
5	AV8055	Ø2	55	10	50m	12		150A	S11
6	AV51055	5	55	50	225m	6 0	9 0	150C	C5a
7	DSZ3056	10	56		10m	70	9.5		A266
8	1N1995	10	56	150m	200u	700	11	150	C1
9	1N1995A	5	56	150m	200u	700	11	150	C1
10	1N1995B	1	56	150m	200u	700	11	150	C1
11	1N1941,A,B	xx1	56	20	20m	700	11	150A	A82e
12#	RZ56A	10	56	.20	68m	18	8 8	125A	DO5
13	1/4A56,A,B	xxx	56	25	1 1m	230	9 5	175	DO7
14	1/4M56Z,10,5	xxx	56	250m	1 1m	230	9 0	175J	A1cy
15	25N56	20	56	.25	1 1m	230		250	DO7
16	1N732,A	xx	56	25	4 0m	140	9 5	175A	DO7
17	1N732B	20	56	.25	4 0m	140			DO7
18	1N4127	5	56	.25	25m	300		200J	DO7
19#	MZ56A	10	56	25	1.8m	330	8 8	150A	DO7
20	1N979,A,B	xxx	56	40	2 2m	150	9.0	175S	DO7
21	JAN1N979B	5	56	40	2.2m	150	9.6	175A	DO7
22	JAN1N4127	5	56	400m	250u	300	10	175A	A1sx
23▼	1N5754B	5	56	400m	2 0m	200	8 3	200J	DO35
24#	5538	5	56	40	5 0m	110	9.5	125A	A1ce
25#	BZX79C56	5	56	400m	2 0m	200	470	200J	A257
26#	BZY94C56	5	56	.40				150J	DO7
27	CD3169	5	56	40	2 0m	210 Ø	10	200	A1ce
28	CZA56D,10,5	xxx	56	.40 ⊠	250u	300	9 0	175J	M371
29	CZB56D,10,5	xxx	56	40 ⊠	1 1m	230	9 0	175J	M371
30	CZC56D,10,5	xxx	56	40 ⊠	2 2m	150	9 0	175J	M371
31	CZD56D,10,5	xxx	56	40 ⊠	250u	300	9 0	175J	M451
32	CZE56D,10,5	xxx	56	.40 ⊠	2 2m	150	9 0	175J	M451
33	HM56,A,B	xxx	56	400m§	2 2m	150		175A	A196c
34	M4Z56,A,-20	xx*	56	.40	2 2m	150		150A	A1kk
35	MACZA56D,10,5	xxx	56	40 ⊠	250u	300	9 0	175J	M453
36	MACZB56D,10,5	xxx	56	.40 ⊠	1 1m	230	9 0	175J	M453
37	MACZC56D,10,5	xxx	56	.40 ⊠	2 2m	150	9 0	175J	M453
38	MACZD56D,10,5	xxx	56	40 ⊠	250u	300	9 0	175J	M453
39	MACZE56D,10,5	xxx	56	40 ⊠	2 2m	150	9.0	175J	M453
40	MBCZA56D,10,5	xxx	56	40 ⊠	250u	300	9.0	175J	M454
41	MBCZB56D,10,5	xxx	56	40 ⊠	1 1m	230	9.0	175J	M454
42	MBCZC56D,10,5	xxx	56	40 ⊠	2 2m	150	9 0	175J	M454
43	MBCZD56D,10,5	xxx	56	40 ⊠	250u	300	9 0	175J	M454
44	MBCZE56D,10,5	xxx	56	40 ⊠	2.2m	150	9 0	175J	M454
45	MCCZA56D,10,5	xxx	56	40 ⊠	250u	300	9.0	175J	M455
46	MCCZB56D,10,5	xxx	56	40 ⊠	1 1m	230	9 0	175J	M455
47	MCCZC56D,10,5	xxx	56	40 ⊠	2 2m	150	9 0	175J	M455
48	MCCZD56D,10,5	xxx	56	40 ⊠	250u	300	9 0	175J	M455
49	MCCZE56D,10,5	xxx	56	.40 ⊠	2 2m	150	9 0	175J	M455
50	MDCZA56D,10,5	xxx	56	40 ⊠	250u	300	9 0	150A	M410
51	MDCZB56D,10,5	xxx	56	.40 ⊠	1 1m	230	9.0	150A	M410
52	MDCZC56D,10,5	xxx	56	40 ⊠	2 2m	150	9 0	150A	M410
53	MDCZD56D,10,5	xxx	56	40 ⊠	250u	300	9 0	150A	M410
54	MDCZE56D,10,5	xxx	56	40 ⊠	2.2m	150	9 0	150A	M410
55	MZ500-34	10	56	40 §	2 2m	150 Ø	9 6	175J	DO7
56	MZC56A10	†	56	400m§	890u	460	9 6	175J	M468
57	MZC56B10	§†	56	400m§	250u	300		175J	M468
58	1/2Z56T5	5	56	50	2 2m	120		175	A94f
59	1N3425	10	56	.50	1.0m	640	7.1	200A	P5
60	1N5263	20†	56	.50	2.2m			200A	DO7
61	1N5263A,B	§Ø	56	50	2 2m	150	9.6	200A	DO7
62#	DZ56A	10	56	50	3 6m	180	8 8	150A	A100
63	MZ92-56	†	56	500m§	2 2m		8.9	150J	C103
64	S5263,A,B	xxx	56	500m	2 2m	150	9 6	175	DO41
65#	NT0 6C56	5	56	600m	5 0m	110		125J	M498
66	7JZ56	†	56	750m	2 2m	150	9 0	175	DO15
67	7Z56,A,B,D	xxxx	56	750m	2 2m	150	9 0	175	DO27
68	7Z56C	⊠	56	750m	2 2m	150	9 0	175	DO27
69	7ZM56,A,B,D	xxxx	56	750m	2 2m	150	9.0	175	DO41
70	7ZM56C	⊠	56	750m	2 2m	150	9.0	175	DO41
71	1N3697	20	56	750m§	2 2m	150		175S	A1az
72	1N3697A	10	56	750m§	2 2m	150		175S	A1az
73	1N3697B	5	56	750m§	2 2m	150		175S	A1az
74	MMZ56,A,-20	xx*	56	.75	2 2m	150		150A	A1kk
75	1A56M,A,B	xxx	56	1 0	4.5m	110		75A	DO15
76	1E56Z,10,5	xxx	56	1.0	4 5m	110	9 0	150A	A52g
77	1M56Z,10,5	xxx	56	1 0	4 5m	110	9 0	175S	DO1
78	1N1789,A	xx	56	1.0	15m	88		175S	DO13
79	1N1885	10	56	1.0	8.0m	75	7 5	200C	A126
80	1N1885A	5	56	1 0	8 0m	75	7 5	200C	A126
81	1N3038,A,B	xxx	56	1 0	4 5m	110		175A	A31a
82	JAN1N3038B	5	56	1.0	4.5m	110	9.6	175A	A31c
83	1N4180	20	56	1.0	4 5m	110	9.0	175	DO29
84	1N4180A	10	56	1.0	4.5m	110	9 0	175	DO29
85	1N4180B	5	56	1 0	4 5m	110	9 0	175	DO29
86	1N4345,A,B	xxx	56	1 0	4.5m	110	9.0	300S	DO7
87♦	1N4422	20	56	1.0	4 5m	33		175S	A266a
88	1N4422A	10	56	1 0	4.5m	33	9.0	175A	A1cm
89	1N4422B	5	56	1.0	4.5m	33	9 0	175A	A1cm
90	1N4758	10	56	1.0	4.5m	110		200A	A1ay
91	1N4758A	5	56	1.0	4.5m	110		200A	A1ay
92	1N5581	20	56	1 0 §	4.5			200A	A196d
93	1N5581A	10	56	1.0 §	4.5m	110		200A	A196d
94	1N5581B	5	56	1 0 §	4.5m	110		200A	A196d
95	1N5651		56	1.0	1.0m		10	175A	DO13
96	1N5651A		56	1.0	1.0m		10	175A	DO13
97	1R56,A,B	xxx	56	1 0	4.5m	110	9 0	175A	A52c
98#	1S249	10	56	1.0	6.0m	80		150J	A56a
99#	1S3056	xx	56	1 0	5.0m	200	8 5	150	A3
100	1Z56,A,B	xxx	56	1 0	4.5	110		150	A1ay
101	AV2056	Ø2	56	1.0	5 0m	107		150A	A19
102#	BZX29C56	5	56	1.0	5 0m	110	9.0	175J	A1cd
103#	BZX61C56	5	56	1.0	5.0m	105	8.0	175J	A3y
104	CZ56,A,B,D	xxxx	56	1.0	10m	67	9.0	175	DO15
105	CZ56C	⊠	56	1.0	10m	67	9.0	175	DO15
106	EVR56,A,B	xxx	56	1 0	4 5m	130		175A	DO27
107#	EZ56A	10	56	1 0	7.1m	2.0k	8.8		A1em
108▼	HEP610-RT	5	56	1 0	4 5	110			DO41
109	HW56,A,B	xxx	56	1 0	4.5m	110		175	A196
110	IDA1Z56,A,B,C	Ø							
		xxxx	56	1.0	18m			200A	A1ht
111	JZ56,A,B,D	xxxx	56	1.0	4 5m	110	9.0	175	DO15
112	JZ56C	⊠	56	1 0	4.5m	110	9.0	175	DO15
113	LPM56,A,-20	xx*	56	1.0	4 5m	110		150A	A1kk
114	TC56A5B	5△⊠	56	1 0	7.5m	120	05	175A	A1nj
115	TZ56,A,B,D	xxxx	56	1.0	10m	67	9.0	175	DO27
116	TZ56C	⊠	56	1 0	10m	67	9.0	175	DO27
117	UZ8756	5	56	1.0	4.5m	110	9.5	175	A146h
118	UZ8856	10	56	1 0	4 5m	110	9.5	175	A146h
119	VR56,A,B	xxx	56	1 0	4.5m	110		125A	A1b
120	Z56,A,B,D	xxxx	56	1 0	4.5m	110	9 0	175	DO27
121	Z56C	⊠	56	1.0	4.5m	110	9 0	175	DO27
122	ZA56,A,B	xxx	56	1.0	4.5m	110		150C	A1ew
123	ZB56	†	56	1.0 §	4 5m	110		150A	A1bc
124	ZD56⊠,A,B	xxx	56	1.0	4.5m	95	9.0	175A	A1cm
125#	ZF56A	10	56	1.0	7.1m	92	8.8	150A	DO13
126	ZH56,A,B	xxx	56	1 0	4.5m	110	9.0	175A	DO1
127	ZM56,A,B,D	xxxx	56	1.0	4 5m	110	9.0	175	DO41
128	ZM56C	⊠	56	1 0	4.5m	110	9 0	175	DO41
129#	7738	5	56	1.1	10m	80	9.5	125A	A1bu
130	1N4850,A,B	xxx	56	1.2	4.5m	110	9.6	175	DO29
131#	BZX67C56	5	56	1.3	10m	60	9.5	150J	S287
132#	ZD56#	5	56	1.3	10	60	9.5	150J	DO13
133	ZM56⊠	10	56	1 3	10	60	9 5	150J	DO13
134#	ZU56	10	56	1 3	10	60	9.5	150J	A1bg
135#	ZY56	5	56	1 3	10	60	9.5	150J	A1bg
136	1N3807,A,B	xxx	56	1 5	6.7m	75	9.6	175S	C14⊠
137	1N4483	5	56	1 5	4 5m	70		175A	A196
138	JAN1N4483	10	56	1.5	4 5m	70	9.6	175A	A1v
139#	1S4056,A	xx	56	1.5	5.0m	46	8.5	150A	DO1
140	1 5DKZ56,A,B	xxx	56	1 5	6.7m	75		175A	DO27
141	1 5JZ56,A,B,D	xxxx	56	1 5	6 7m	75	9.6	175	DO15
142	1 5JZ56C	⊠	56	1 5	6.7m	75	9.6	175	DO15
143	1 5R56,A,B	xxx	56	1 5	6 5m	90	9 0	175A	A52c
144	1.5Z56,A,B,D	xxxx	56	1.5	6.7m	75	9 6	175	DO27
145	1.5Z56C	⊠	56	1.5	6.7m	75	9 6	175	DO27
146#	BZY95C56	5	56	1 5	10m	63	55	175J	DO1
147	MZ1000-31	10	56	1 5 §	4.5m	165 Ø	9.6	175J	A1ay
148#	Z3B560CF	20§Ø	56	1.5	10m	70	11	175J	DO1
149	1N4070	5	56	2.0	7.5m	120	.50	100	A1ss
150	1N4070A	5	56	2 0	7.5m	120	.20	100	A1nj
151	2R56,A,B	xxx	56	2 0	8.8m	90	9.0	175A	DO27
152	2VR56,A,B	xxx	56	2 0	8.8m	90			A3e
153	LMZ56,A,-20	xx*	56	2 0	9.0m	55		150A	A1kk
154	ZBC56	†	56	2.0 §	9.0m	70		150A	A1bc
155	1N5045	10	56	2 5	11m	45	9.0	150	A1gn
156	1N5045A	5	56	2 5	11m	45	9.0	150	A1gn
157	1N5087	5	56	3 0	10m	70		175A	A146j
158	3R56,A,B	xxx	56	3 0	14m	55	9 0	175A	A1rw
159	3TZ56,A,B,D	xxxx	56	3 0	20m	55		175	A1ec
160	3TZ56C	⊠	56	3 0	20m	55		175	A1ec
161	3VR56,A,B	xxx	56	3.0	13m	55			A222
162	CZ5087	10	56	3.0	10m	70	540	175A	A196e
163#	FDZ56A	10	56	3.0 ⊠	21m	31	8.8	150A	S303
164	M3Z56,A	xx	56	3.0	13m	68		150A	A1kk
165	MZ756	5	56	3.0	10m	70	9.5	175A	A146j
166	MZ856	10	56	3 0	10m	70	9.5	175A	A146j
167	MZ956	20	56	3 0	10m	70	9.5	175A	A146j
168#	NT3C56	5	56	3 0	5 0m	200		125J	S43a
169	UZ756	5	56	3 0	10m	70	9.5	175A	A146f
170	UZ856	10	56	3.0	10m	70	9.5	175A	A146f
171	UZ956	20	56	3.0	10m	70	9.5	175A	A146f
172	ZAC56,A,B	xxx	56	3 0	4 5m	110		150C	A1ey
173	ZCC56	†	56	3.0 §	10m	70		150A	A1ey
174	3T56,A,B	xx*	56	3 5	15m	88			DO4
175#	4GZ56A	10	56	4.0	45m	500	9.0		S19g
176	1N4036,A,B	xxx	56	5 0	22m	30	9.6	180A	S82
177	1N4976	5	56	5 0	20m	35		175A	A146m
178	JAN1N4976	5	56	5.0	20m	35	9.5	175A	A248f
179♦	1N5370	20	56	5.0	20m			200A	A1ee
180▼	1N5370A	10	56	5.0	20m	35		200A	A1ee
181▼	1N5370B	5	56	5.0	20m	35		200A	A1ee
182▼	5ZS56,A,B	xxx	56	5 0 §	20m	35		200A	A1ts
183#	5338	10Ø	56	5 0	10m	80		150J	A9h

SYMBOLS AND CODES EXPLAINED IN INTERPRETER

2. SILICON REFERENCE DIODES

IN ORDER OF (1) REF. VOLTAGE, (2) DISSIPATION, and (3) TYPE No.

LINE No.	3 TYPE No	TOLERANCE 20 10 5 2 ± (%)	1 NOM REF. VOLT (V)	2 MAX DISS. @ 25°C (W)	TEST CUR Izt (A)	MAX. DYN IMP (Ω)	TEMP. COEFF Tc	MAX. TEMP (°C)	DWG. No
1▼	CTZC56,A,B,DØ	xxxx	56	5 0 §	20m	35 Ø	9 0	175A	A1ey
2▼	CTZC56CØ	1	56	5 0 §	20m	35 Ø	9.0	175A	A1ey
3▼	CTZC56EØ	3	56	5 0 §	20m	35 Ø	9.0	175A	A1ey
4	DSZ5756	5	56	5 0	20m	35	9 5	175A	A60r
5	DSZ5856	10	56	5 0	20m	35	9 5	175A	A60r
6	HZ56	10	56	5 0	18m	8 0	5 0	165C	M222
7	MZ5756	5	56	5 0	20m	35	9 5	175A	A60f
8	MZ5856	10	56	5 0	20m	35	9 5	175A	A60f
9	MZ5956	20	56	5 0	20m	35	9 5	175A	A60f
10▼	TZC56,A,B,D	xxxx	56	5 0 §	20m	35 Ø	9 0	175A	A1ey
11▼	TZC56C	1	56	5 0 §	20m	35 Ø	9 0	175A	A1ey
12▼	TZC56E	3	56	5 0 §	20m	35 Ø	9 0	175A	A1ey
13▼	UZ5756	5	56	5 0	20m	35	9 5	175A	A146m
14♦	UZ5856	10	56	5 0	20m	35	9 5	175A	A146m
15	UZ5956	20	56	5 0	20m	35 Ø	9 5	175A	A146m
16	ZC56	†	56	5 0 §	20m	35		150A	A1ey
17#	KR57	10	56	8 0	50m	11	9 8	150A	S186
18	UZ4756	5	56	8 0	20m	35		175A	A146m
19	UZ4856	10	56	8 0	20m	35		175A	A146m
20	1N1369,A	xx	56	10	150m	9 0		175A	DO4
21	1N1369B	20	56	10	150m	9 0			S11e
22	1N1369C,CAØ	xx	56	10 §	15	9 0		175J	S19a
23	1N1831	10	56	10	150m	9 0	10	150A	S19a
24	1N1831A	5	56	10	150m	9 0	10	150A	S19a
25	1N1831C,CAØ	xx	56	10	150m	9 0	10	150A	S19a
26	1N1901	10	56	10	8 0m	75	7 5	200A	S82
27	1N1901A	5	56	10	8 0m	75	7 5	200A	S82
28	1N2999,A,B	xxx	56	10	45m	16		175C	DO4⧄
29	JAN1N2999B,RB	5	56	10	45m	16	9 6	150C	DO4
30	1N4280	20	56	10	45m	16	9 0	175C	S134
31	1N4280A	10	56	10	45m	16	9 0	175C	S134
32	1N4280B	5	56	10	45m	16	9 0	175C	S134
33	JAN1N4280B	5	56	10 §	45m	16	9 6	175S	S134a
34#	1S291	10	56	10	60m	12		150J	S19g
35#	1S5056,A	xx	56	10	50m	10	10	150C	DO4
36#	1S5056CØ	10	56	10	50m	10	10	150C	DO4
37#	1S6056	10	56	10	50m	15	8 0	150	DO4
38#	1S6056A	5	56	10	50m	10	8 0	150	DO4
39	1OPZ56,A,B,D	xxxx	56	10	45m	16	9 0	175	DO4
40	1OPZ56C	⧄	56	10	45m	16	9 0	175	DO4
41	1ORZ56,A,B,D	xxxx	56	10	150m	9 0	10	155	DO4
42	1ORZ56C	⧄	56	10	150m	9 0	10	155	DO4
43	AV8056	Ø2	56	10	50m	12		150A	S11
44#	GZ56A	10	56	10 ⧄	36m	18	8.8	150A	DO4
45#	PZ56A	10	56	10 ⧄	36m	18	8 8	150A	S95a
46	UZ7756	5	56	10	40m	30	9 5	175	S277⧄
47	UZ7856	10	56	10	40m	30	9 5	175	S277⧄
48	UZ7956	20	56	10	40m	30	9 5	175	S277⧄
49#	Z5D560CF	20§Ø	56	10	50m	10	9 5	150J	DO4
50#	ZC5056	5	56	10	50m	10	8.7	150A	S19
51#	ZD5056	10	56	10	50m	10	8 7	150A	S19
52#	4138	10Ø	56	15	60m	9 0		150J	S87
53#	4238	10Ø	56	15	60m	9 0		150J	S87
54#	BZY93C56	5	56	20 §	200m	8 0	55	175J	DO4⧄
55#	SZ56B	5	56	25	100m	7 0	9 0	150B	S16
56#	ZL56	10	56	25 ⧄	10	60	9 5	150J	M41
57#	ZX56	5	56	25 ⧄	10	60	9 5	150J	M41
58#	4338	10Ø	56	30	60m	9 0		150J	S87
59#	4438	10Ø	56	30	60m	9 0		150J	S87
60	1N2832,A,B	xxx	56	50	220m	6 0	9 0	175S	C5a
61	JAN1N2832B,RB	5	56	50	220m	6 0	9 6	150C	C5a
62	1N3334	20	56	50	220m	6 0	9 0	175J	DO5
63	1N3334A	10	56	50	220m	6 0	9 0	175J	DO5
64	1N3334B	5	56	50	220m	6 0	9 0	175J	DO5
65	JAN1N3334B,RB	5	56	50	220m	6 0	9 6	150	DO5
66	AV51056	5	56	50	220m	6 0	9 0	150C	C5a
67	75TE56,A	xx	56	75 ⧄	180m	25m	1 0	125C	TO36
68#	BZY91C56	5	56	75 §	500m	2 0	9 4	175J	DO5⧄
69	80TF56,A	xx	56	80	180m	25m	1 0	125C	M117c
70#	4538	10Ø	56	100	90m	8 0		150J	S84
71#	4638	10Ø	56	100	90m	8 0		150J	S84
72#	ZC756	5	56	100 §	25	35	9 1	175J	S125d⧄
73	HRE56 5	5	56.5		10m	85	50	70A	A129
74	HRE56 5A	5	56.5		10m	85	.50	125A	A129
75	1N1968	10	56.5	400m	200u	700 Ø	10		A82g
76#	BZX70C56	5	56.5	2 5	10m	63	550	150J	A171b
77	1N1885B	1	57	1 0	8 0m	30 △	7 5	175A	DO13
78	AV13	10	57	1 0	5 0m	107		150A	A19
79	AV2057	Ø2	57	1 0	5 0m	107		150A	A19
80	AV113	10	57	10	50m	12		150A	S11
81	AV8057	Ø2	57	10	50m	12		150A	S11
82	AV51057	5	57	50	220m	6 2	9 0	150C	C5a
83	1N235Ø	10	58	150m	200u			150A	C1
84	1N235AØ	5	58	150m	200u			150A	C1
85	1N1323,A	xx	58	15	.20m	11		150A	C1
86	IDAZ235,A,B,CØ	xxxx	58	150m	200u			150A	A1hc
87	PS6323	15	58	50		20		200A	DO14
88	AV2058	Ø2	58	1 0	5 0m	107		150A	A19
89	AV8058	Ø2	58	10	50m	12		150A	S11
90	AV51058	5	58	50	220m	6 5	9 0	150C	C5a
91	PS1507	5	58.8	25	10m	105	20	150A	A1gc
92	PS1507A	5	58.8	25	10m	105	10	150A	A1gc
93	AV2059	Ø2	59	1 0	5 0m	107		150A	A19
94	ZM39C	⧄	59	1 0	6.5m	60	9 0	175	DO41
95	AV8059	Ø2	59	10	50m	12		150A	S11
96	AV51059	5	59	50	220m	6 5	9 0	150C	C5a
97	DSZ3060	10	60		10m	70	9 5		A266
98	HRE60	5	60		10m	90	.50	70A	A129
99	HRE60A	5	60		10m	90	50	125A	A129
100	1N4128	5	60	25	25m	400		200J	DO7
101	JAN1N4128	5	60	400m	250u	400	10	175A	A1sx
102	CZA60D,10,5	xxx	60	40 ⧄	250u	400	9.0	175J	M371
103	CZD60D,10,5	xxx	60	40 ⧄	250u	400	9 0	175J	M451
104	MACZA60D,10,5	xxx	60	40 ⧄	250u	400	9 0	175J	M453
105	MACZD60D,10,5	xxx	60	.40 ⧄	250u	400	9 0	175J	M453
106	MBCZA60D,10,5	xxx	60	40 ⧄	250u	400	9 0	175J	M454
107	MBCZD60D,10,5	xxx	60	40 ⧄	250u	400	9 0	175J	M454
108	MCCZA60D,10,5	xxx	60	.40 ⧄	250u	400	9 0	175J	M455
109	MCCZD60D,10,5	xxx	60	.40 ⧄	250u	400	9 0	175J	M455
110	MDCZA60D,10,5	xxx	60	40 ⧄	250u	400	9 0	150A	M410
111	MDCZD60D,10,5	xxx	60	.40 ⧄	250u	400	9.0	150A	M410
112	MZC60A10	†	60	400m§	830u	530	9 7	175J	M468
113	MZC60B10	§†	60	400m§	250u	400		175J	M468
114	1N5264	20†	60	.50	2.1m			200A	DO7
115	1N5264A,B	§Ø	60	.50	2.1m	170	9.7	200A	DO7
116	MZ92-60	†	60	500m§	2 1m		9 0	150J	C103
117	S5264,A,B	xxx	60	500m	2 1m	170	9 7	175	DO41
118	AV2060	Ø2	60	1 0	5.0m	107		150A	A19
119	EVR60,A,B	xxx	60	1 0	4 0m	150		175A	DO27
120	IDA1Z60,A,B,CØ	xxxx	60	1 0	17m			200A	A1ht
121	UZ8760	5	60	1 0	4.0m	125	9 5	175	A146h
122	UZ8860	10	60	1.0	4.0m	125	9 5	175	A146h
123	1N5088	5	60	3 0	10m	70		175A	A146j
124	CZ5088	10	60	3 0	10m	70	545	175A	A196e
125	MZ760	5	60	3 0	10m	70	9 5	175A	A146j
126	MZ860	10	60	3 0	10m	70	9 5	175A	A146j
127	MZ960	20	60	3 0	10m	70	9 5	175A	A146j
128	UZ760	5	60	3.0	10m	70	9 5	175A	A60
129	UZ860	10	60	3 0	10m	70	9 5	175A	A146f
130	UZ960	20	60	3 0	10m	70	9 5	175A	A60
131	1N5122	5	60	5 0	20m	40		175A	A146m
132♦	1N5371	20	60	5 0	20m			200A	A1ee
133▼	1N5371A	10	60	5 0	20m	40		200A	A1ee
134▼	1N5371B	5	60	5 0	20m	40		200A	A1ee
135▼	5ZS60,A,B	xxx	60	5 0 §	20m	40		200A	A1ts
136	DSZ5760	5	60	5 0	20m	40	10	175A	A60r
137	DSZ5860	10	60	5 0	20m	40	10	175A	A60r
138	MZ5760	5	60	5 0	20m	40	9 5	175A	A60f
139	MZ5860	10	60	5.0	20m	40	9.5	175A	A60f
140	MZ5960	20	60	5 0	20m	40	9 5	175A	A60f
141▼	UZ5760	5	60	5 0	20m	40	10	175A	A146m
142♦	UZ5860	10	60	5 0	20m	40	10	175A	A146m
143	UZ5960	20	60	5.0	20m	40 Ø	9 5	175A	A146m
144	AV8060	Ø2	60	10	50m	12		150A	S11
145	UZ7760	5	60	10	40m	35	9 5	175	S277⧄
146	UZ7860	10	60	10	40m	35	9 5	175	S277⧄
147	UZ7960	20	60	10	40m	35	9.5	175	S277⧄
148	AV51060	5	60	50	200m	7 0	9.0	150C	C5a
149	AV2061	Ø2	61	1 0	5 0m	107		150A	A19
150	AV8061	Ø2	61	10	50m	12		150A	S11
151	AV51061	5	61	50	200m	7.0	9 0	150C	C5a
152	DSZ3062	10	62		10m	90	9 5		A266
153	1/4A62,A,B	xxx	62	25	1.0m	290	9 5	175	DO7
154	1/4M62Z,10,5	xxx	62	250m	1.0m	290	9 1	175J	A1cy
155	25N62	20	62	25	1 0m	290		250	DO7
156	1N733,A	xx	62	25	2 0m	170	9 6	175A	DO7
157	1N733B	20	62	25	2.0m	170			DO7
158	1N4129	5	62	25	25m	500		200J	DO7
159	1N980,A,B	xxx	62	40	2.0m	85	9 0	175S	DO7
160	JAN1N980B	5	62	40	2.0m	185	9.7	175A	DO7
161	JAN1N4129	5	62	400m	250u	500	10	175A	A1sx
162▼	1N5755B	5	62	400m	2.0m	215	8 2	200J	DO35
163#	5539	5	62	400m	2.0m	200	9 5	125A	A1ce
164#	BZX79C62	5	62	400m	2.0m	215	510	200J	A257
165#	BZY94C62	5	62	40				150J	DO7
166	CD3171	5	62	40	2.0m	240 Ø	10	200	A1ce
167	CZA62D,10,5	xxx	62	.40 ⧄	250u	500	9 0	175J	M371
168	CZB62D,10,5	xxx	62	40 ⧄	1 0m	290	9 0	175J	M371
169	CZC62D,10,5	xxx	62	40 ⧄	2 0m	185	9 0	175J	M371
170	CZD62D,10,5	xxx	62	40 ⧄	250u	500	9.0	175J	M451
171	CZE62D,10,5	xxx	62	40 ⧄	2.0m	185	9 0	175J	M451
172	HM62,A,B	xxx	62	400m§	2 0m	185		175A	A196c
173	M4Z62,A,-20	xx*	62	40	2 0m	185		150A	A1kk
174	MACZA62D,10,5	xxx	62	40 ⧄	250u	500	9 0	175J	M453
175	MACZB62D,10,5	xxx	62	.40 ⧄	1.0m	290	9.0	175J	M453
176	MACZC62D,10,5	xxx	62	40 ⧄	2.0m	185	9 0	175J	M453
177	MACZD62D,10,5	xxx	62	40 ⧄	250u	500	9 0	175J	M453
178	MACZE62D,10,5	xxx	62	40 ⧄	2 0m	185	9 0	175J	M453
179	MBCZA62D,10,5	xxx	62	.40 ⧄	250u	500	9 0	175J	M454
180	MBCZB62D,10,5	xxx	62	.40 ⧄	1 0m	290	9 0	175J	M454
181	MBCZC62D,10,5	xxx	62	.40 ⧄	2 0m	185	9 0	175J	M454
182	MBCZD62D,10,5	xxx	62	40 ⧄	250u	500	9 0	175J	M454

SYMBOLS AND CODES EXPLAINED IN INTERPRETER

2. SILICON REFERENCE DIODES

IN ORDER OF (1) REF. VOLTAGE, (2) DISSIPATION, and (3) TYPE No.

LINE No.	3 TYPE No	TOLERANCE 1 20 10 5 2 ± (%)	NOM. REF. VOLT. (V)	2 MAX. DISS @ 25°C (W)	TEST CUR. Izt (A)	MAX. DYN. IMP. (Ω)	TEMP COEFF Tc	MAX. TEMP (°C)	DWG. No.
1	MBCZE62D,10,5	xxx	62	.40 ∅	2 0m	185	9 0	175J	M454
2	MCCZA62D,10,5	xxx	62	40 ∅	250u	500	9 0	175J	M455
3	MCCZB62D,10,5	xxx	62	40 ∅	1 0m	290	9 0	175J	M455
4	MCCZC62D,10,5	xxx	62	40 ∅	2 0m	185	9 0	175J	M455
5	MCCZD62D,10,5	xxx	62	40 ∅	250u	500	9 0	175J	M455
6	MCCZE62D,10,5	xxx	62	40 ∅	2 0m	185	9 0	175J	M455
7	MDCZA62D,10,5	xxx	62	40 ∅	250u	500	9.0	150A	M410
8	MDCZB62D,10,5	xxx	62	40 ∅	1 0m	290	9 0	150A	M410
9	MDCZC62D,10,5	xxx	62	.40 ∅	2 0m	185	9 0	150A	M410
10	MDCZD62D,10,5	xxx	62	40 ∅	250u	500	9 0	150A	M410
11	MDCZE62D,10,5	xxx	62	40 ∅	2 0m	185	9 0	150A	M410
12	MZ500-35	10	62	4 §	2.0m	190 ∅	9 7	175J	DO7
13	MZC62A10	†	62	400m§	810u	560	9 7	175J	M468
14	MZC62B10	§†	62	400m§	250u	500		175J	M468
15	1/2Z62T5	5	62	50	2 0m	145		175	A94f
16	1N5265	20†	62	50	2 0m			200A	DO7
17	1N5265A,B	§∅	62	50	2 0m	185	9 7	200A	DO7
18	IDAZ62,A,B,C∅	xxxx	62	500m	3 0m			200A	A1hc
19	MZ92-62	†	62	500m§	2 0m		9 0	150J	C103
20	S5265,A,B	xxx	62	500m	2 0m	185	9 7	175	DO41
21	7JZ62	†	62	750m	2 0m	185	9.0	175	DO15
22	7Z62,A,B,D	xxxx	62	750m	2 0m	185	9 0	175	DO27
23	7Z62C	∅	62	750m	2 0m	185	9 0	175	DO27
24	7ZM62,A,B,D	xxxx	62	750m	2.0m	185	9 0	175	DO41
25	7ZM62C	∅	62	750m	2 0m	185	9 0	175	DO41
26	1N3698	20	62	750m§	2 0m	185		175S	A1az
27	1N3698A	10	62	750m§	2 0m	185		175S	A1az
28	1N3698B	5	62	750m§	2 0m	185		175S	A1az
29	MMZ62,A,-20	xx*	62	.75	2 0m	185		150A	A1kk
30	1A62M,A,B	xxx	62	1 0	4 0m	125		75A	DO15
31	1E62Z,10,5	xxx	62	1 0	4 0m	125	9 0	150A	A52g
32	1M62Z,10,5	xxx	62	1 0	4 0m	125	9 0	175S	DO1
33	1N1790,A	xx	62	1 0	5 0m	105		175S	DO13
34	1N3039,A,B	xxx	62	1 0	4 0m	125		175A	A31a
35	JAN1N3039B	5	62	1 0	4.0m	125	9 7	175A	A31c
36	1N4181	20	62	1.0	4 0m	125	9 0	175	DO29
37	1N4181A	10	62	1 0	4 0m	125	9 0	175	DO29
38	1N4181B	5	62	1 0	4 0m	125	9 0	175	DO29
39	1N4346,A,B	xxx	62	1 0	4 0m	125	9.0	300S	DO7
40♦	1N4423	20	62	1 0	4 0m	40		175S	A266a
41	1N4423A	10	62	1 0	4 0m	40	9 0	175A	A1cm
42	1N4423B	5	62	1 0	4 0m	40	9 0	175A	A1cm
43	1N4759	10	62	1 0	4 0m	125		200A	A1ay
44	1N4759A	5	62	1 0	4 0m	125		200A	A1ay
45	1N5582	20	62	1.0 §	4 0			200A	A196d
46	1N5582A	10	62	1 0 §	4 0m	125		200A	A196d
47	1N5582B	5	62	1 0 §	4 0m	125		200A	A196d
48	1N5652		62	1 0	1.0m		10	175A	DO13
49	1N5652A		62	1 0	1 0m		10	175A	DO13
50	1R62,A,B	xxx	62	1 0	4.0m	125	9 0	175A	A52c
51#	1S250	10	62	1 0	4 0m	100		150J	A56a
52#	1S3062	xx	62	1 0	5 0m	200	8 5	150	A3
53	1Z62,A,B	xxx	62	1.0	4.0	125		150	A1ay
54	AV2062	∅2	62	1 0	5 0m	107		150A	A19
55#	BZX61C62	5	62	1 0	5 0m	110	8 0	175J	A3y
56	CZ62,A,B,D	xxxx	62	1 0	10m	69	9 0	175	DO15
57	CZ62C	∅	62	1 0	10m	69	9 0	175	DO15
58▼	HEP611-RT	5	62	1 0	4 0	125			DO41
59	HW62,A,B	xxx	62	1 0	4 0m	125		175	A196
60	JZ62,A,B,D	xxxx	62	1 0	4 0m	125	9 0	175	DO15
61	JZ62C	∅	62	1 0	4 0m	125	9 0	175	DO15
62	LPM62,A,-20	xx*	62	1.0	4.0m	125		150A	A1kk
63	TC62A5B	5△∅	62	1 0	7 5m	135	05	175A	A1nj
64	TZ62,A,B,D	xxxx	62	1 0	10m	69	9 0	175	DO27
65	TZ62C	∅	62	1 0	10m	69	9.0	175	DO27
66	VR62,A,B	xxx	62	1 0	4 0m	125		125A	A1b
67	Z62,A,B,D	xxxx	62	1 0	4 0m	125	9 0	175	DO27
68	Z62C	∅	62	1 0	4 0m	125	9 0	175	DO27
69	ZA62,A,B	xxx	62	1 0	4 0m	125		150C	A1ew
70	ZB62	†	62	1 0 §	4 0m	125		150A	A1bc
71	ZD62∅,A,B	xxx	62	1 0	4 0m	110	9 0	175A	A1cm
72	ZH62,A,B	xxx	62	1 0	4 0m	125	9.0	175A	DO1
73	ZM62,A,B,D	xxxx	62	1.0	4.0m	125	9 0	175	DO41
74	ZM62C	∅	62	1 0	4 0m	125	9 0	175	DO41
75#	7739	5	62	1 1	10m	80	9 5	125A	A1bu
76	1N4851,A,B	xxx	62	1 2	4 0m	125	9 7	175	DO29
77#	BZX67C62	5	62	1 3	10m	80	9 5	150J	S287
78#	ZD62#	5	62	1 3	10	80	9 5	150J	DO13
79#	ZY62	5	62	1 3	10	80	9 5	150J	A1bg
80	1N3808,A,B	xxx	62	1 5	6 0m	85	9 7	175S	C14∅
81	1N4484	5	62	1 5	4 0m	80		175A	A196
82	JAN1N4484	10	62	1 5	4 0m	80	9 7	175A	A1v
83#	1S4062,A	xx	62	1 5	5 0m	52	8 5	150A	DO1
84	1 5DKZ62,A,B	xxx	62	1 5	6 0m	85		175A	DO27
85	1 5JZ62,A,B,D	xxxx	62	1 5	6 0m	85	9 7	175	DO15
86	1 5JZ62C	∅	62	1.5	6 0m	85	9.7	175	DO15
87	1 5R62,A,B	xxx	62	1 5	6 0m	110	9.0	175A	A52c
88	1 5Z62,A,B,D	xxxx	62	1 5	6 0m	85	9 7	175	DO27
89	1 5Z62C	∅	62	1 5	6 0m	85	9 7	175	DO27
90#	BZY95C62	5	62	1 5	10m	75	60	175J	DO1
91	MZ1000-32	10	62	1 5 §	4 0m	178 ∅	9 7	175J	A1ay
92#	Z3B620CF	20§∅	62	1 5	10m	82	11	175J	DO1
93	1N4071	5	62	2.0	7 5m	135	50	100	A1nj
94	1N4071A	5	62	2 0	7 5m	135	20	100	A1nj
95	2R62,A,B	xxx	62	2 0	8 1m	110	9.0	175A	DO27
96	2VR62,A,B	xxx	62	2 0	8 1m	110			A3e
97	LMZ62,A,-20	xx*	62	2 0	8 0m	60		150A	A1kk
98	ZBC62	†	62	2 0 §	8 0m	75		150A	A1bc
99	1N5046	10	62	2 5	10m	51	9 0	150	A1gn
100	1N5046A	5	62	2 5	10m	51	9.0	150	A1gn
101#	BZX70C62	5	62	2 5	10m	75	600	150J	A171b
102	1N5089	5	62	3 0	10m	75		175A	A146j
103	3R62,A,B	xxx	62	3.0	12m	65	9 0	175A	A1rw
104	3TZ62,A,B,D	xxxx	62	3 0	10m	65		175	A1ec
105	3TZ62C	∅	62	3 0	10m	65		175	A1ec
106	3VR62,A,B	xxx	62	3 0	12m	65			A222
107	CZ5089	10	62	3 0	10m	75	550	175A	A196e
108	M3Z62,A	xx	62	3 0	12m	75		150A	A1kk
109	MZ762	5	62	3 0	10m	75	9 5	175A	A146j
110	MZ862	10	62	3 0	10m	75	9.5	175A	A146j
111	MZ962	20	62	3.0	10m	75	9 5	175A	A146j
112#	NT3C62	5	62	3 0	5 0m	200		125J	S43a
113	ZAC62,A,B	xxx	62	3 0	4 0m	125		150C	A1ey
114	ZCC62	†	62	3 0 §	10m	75		150A	A1ey
115	3T62,A,B	xx*	62	3 5	5 0m	105			DO4
116	1N4037,A,B	xxx	62	5.0	20m	50	9 7	180A	S82
117	1N4889	5	62	5 0	20m	42		175A	A60q
118	1N4977	5	62	5 0	20m	42		175A	A146m
119	JAN1N4977	5	62	5 0	20m	42	10	175A	A248f
120♦	1N5372	20	62	5.0	20m			200A	A1ee
121▼	1N5372A	10	62	5 0	20m	42		200A	A1ee
122▼	1N5372B	5	62	5 0	20m	42		200A	A1ee
123▼	5ZS62,A,B	xxx	62	5.0 §	20m	42		200A	A1ts
124#	5339	10∅	62	5.0	5.0m	120		150J	A9h
125▼	CTZC62,A,B,D∅	xxxx	62	5 0 §	20m	42 ∅	9.0	175A	A1ey
126▼	CTZC62C∅	1	62	5 0 §	20m	42 ∅	9 0	175A	A1ey
127▼	CTZC62E∅	3	62	5 0 §	20m	42 ∅	9 0	175A	A1ey
128▼	TZC62,A,B,D	xxxx	62	5.0 §	20m	42 ∅	9.0	175A	A1ey
129▼	TZC62C	1	62	5.0 §	20m	42 ∅	9 0	175A	A1ey
130▼	TZC62E	3	62	5 0 §	20m	42 ∅	9 0	175A	A1ey
131	ZC62	†	62	5.0 §	20m	42		150A	A1ey
132	UZ4762	5	62	8.0	20m	42		175A	A146m
133	UZ4862	10	62	8 0	20m	42		175A	A146m
134	1N1370,A	xx	62	10	50m	12		175A	DO4
135	1N1370B	20	62	10	50m	12			S11e
136	1N1370C,CA∅	xx	62	10 §	50m	12		175J	S19a
137	1N1832	10	62	10	50m	12	10	150A	S19a
138	1N1832A	5	62	10	50m	12	10	150A	S19a
139	1N1832C,CA∅	xx	62	10	50m	12	10	150A	S19a
140	1N3000,A,B	xxx	62	10	40m	17		175C	DO4∅
141	JAN1N3000B,RB	5	62	10	40m	17	9.7	150C	DO4
142	1N4281	20	62	10	40m	17	9.0	175C	S134
143	1N4281A	10	62	10	40m	17	9.0	175C	S134
144	1N4281B	5	62	10	40m	17	9.0	175C	S134
145	JAN1N4281B	5	62	10 §	40m	17	9 7	175S	S134a
146#	1S292	10	62	10	40m	13		150J	S19g
147#	1S5062,A	xx	62	10	50m	15	10	150C	DO4
148#	1S5062C∅	10	62	10	50m	15	10	150C	DO4
149#	1S6062	10	62	10	50m	25	8.0	150	DO4
150#	1S6062A	5	62	10	50m	15	8.0	150	DO4
151	10PZ62,A,B,D	xxxx	62	10	40m	17	9 0	175	DO4
152	10PZ62C	∅	62	10	40m	17	9.0	175	DO4
153	10RZ62,A,B,D	xxxx	62	10	50m	12	10	155	DO4
154	10RZ62C	∅	62	10	50m	12	10	155	DO4
155	AV8062	∅2	62	10	50m	12		150A	S11
156#	Z5D620CF	20§∅	62	10	50m	15	9 5	150J	DO4
157#	ZC5062	5	62	10	50m	15	8.8	150A	S19
158#	ZD5062	10	62	10	50m	15	8 8	150A	S19
159#	4139	10∅	62	15	60m	14		150J	S87
160#	4239	10∅	62	15	60m	14		150J	S87
161#	BZY93C62	5	62	20 §	200m	9.0	60	175J	DO4
162#	ZX62	5	62	25 ∅	10	80	9 5	150J	M41
163#	4339	10∅	62	30	60m	14		150J	S87
164#	4439	10∅	62	30	60m	14		150J	S87
165	1N2833,A,B	xxx	62	50	200m	7.0	9 0	175S	C5a
166	JAN1N2833B,RB	5	62	50	200m	7 0	9 7	150C	C5a
167	1N3335	20	62	50	200m	7 0	9 0	175J	DO5
168	1N3335A	10	62	50	200m	7.0	9.0	175J	DO5
169	1N3335B	5	62	50	200m	7 0	9 0	175J	DO5
170	JAN1N3335B,RB	5	62	50	200m	7 0	9.7	150	DO5
171	5OT62,A,B	xx*	62	50	200m	7 0	9 0		S19e
172	AV51062	5	62	50	200m	7·0	9.0	150C	C5a
173#	BZY91C62	5	62	75 §	500m	2 2	9.4	175J	DO5∅
174#	4539	10∅	62	100	75m	12		150J	S84
175#	4639	10∅	62	100	75m	12		150J	S84
176#	ZC762	5	62	100 §	25	45	9 1	175J	S125d∅
177	HRE62.5	5	62 5		10m	95	.50	70A	A129
178	HRE62 5A	5	62.5		10m	95	50	125A	A129
179	AV2063	∅2	63	1 0	5 0m	107		150A	A19
180	AV8063	∅2	63	10	50m	12		150A	S11
181	AV51063	5	63	50	200m	7 0	9 0	150C	C5a
182	HRE64	5	64		10m	100	50	70A	A129
183	HRE64A	5	64		10m	100	50	125A	A129
184	AV2064	∅2	64	1.0	5 0m	155		150A	A19
185	IDA1Z64,A,B,C∅	xxxx	64	1 0	17m			200A	A1ht
186	AV8064	∅2	64	10	50m	21		150A	S11
187	AV51064	5	64	50	190m	7.5	9 0	150C	C5a
188	AV2065	∅2	65	1 0	5 0m	155		150A	A19
189	AV8065	∅2	65	10	50m	21		150A	S11

SYMBOLS AND CODES EXPLAINED IN INTERPRETER

2. SILICON REFERENCE DIODES

IN ORDER OF (1) REF. VOLTAGE, (2) DISSIPATION, and (3) TYPE No.

LINE No	3 TYPE No.	TOLERANCE 20 10 5 2 ± (%)	NOM. REF. VOLT. (V)	2 MAX. DISS. @ 25°C (W)	TEST CUR. Izt (A)	MAX. DYN. IMP. (Ω)	TEMP. COEFF Tc	MAX. TEMP (°C)	DWG. No.
1	AV51065	5	65	50	190m	7 5	9.0	150C	C5a
2	IDAZ66,A,B,C∅	xxxx	66	500m	3 0m			200A	A1hc
3	AV2066	∅2	66	1 0	5 0m	155		150A	A19
4	AV8066	∅2	66	10	50m	21		150A	S11
5	AV51066	5	66	50	190m	7 5	9 0	150C	C5a
6	HRE66 5	5	66 5		10m	105	.50	70A	A129
7	HRE66 5A	5	66 5		10m	105	50	125A	A129
8	AV2067	∅2	67	1.0	5 0m	155		150A	A19
9	VR67,A,B	xx*	67	1 0	2 0m	200	9 5	125C	A1ex
10	2VR67,A,B	xx*	67	2.0	2.0m	200			A3e
11	3VR67,A,B	xx*	67	3 0	30m	30			A222
12	AV8067	∅2	67	10	50m	21		150A	S11
13	AV51067	5	67	50	180m	8 0	9 0	150C	C5a
14	PS1508	5	67 2	25	10m	120	20	150A	A1gc
15	PS1508A	5	67 2	25	10m	120	10	150A	A1gc
16	1N1996	10	68	150m	200u	900	11	150	C1
17	1N1996A	5	68	150m	200u	900	11	150	C1
18	1N1996B	1	68	150m	200u	900	11	150	C1
19	1N1942,A,B	xx1	68	20	.20m	900	11	150A	A82e
20#	RZ68A	10	68	20	56m	24	9 0	125A	DO5
21	1/4A68,A,B	xxx	68	25	92m	350	9.5	175	DO7
22	1/4M68Z,10,5	xxx	68	250m	920u	350	9 1	175J	A1cy
23	25N68	20	68	25	92m	350		250	DO7
24	1N734,A	xx	68	25	2 0m	200	9.6	175A	DO7
25	1N734B	20	68	25	2 0m	200			DO7
26	1N4130	5	68	25	25m	700		200J	DO7
27#	MZ68A	10	68	25	1 5m	470	9 0	150A	DO7
28	1N670	5	68	40	1 0m	290	9 0	200S	A31b
29	1N981,A,B	xxx	68	40	1 8m	230	9 0	175S	DO7
30	JAN1N981B	5	68	40	1 8m	230	9 7	175A	DO7
31	JAN1N4130	5	68	400m	250u	700	10	175A	A1sx
32▼	1N5756B	5	68	400m	2 0m	240	8 0	200J	DO35
33#	5540	5	68	40	2 0m	200	9 5	125A	A1ce
34#	BZX79C68	5	68	400m	2 0m	240	560	200J	A257
35#	BZY94C68	5	68	40				150J	DO7
36	CD3172	5	68	40	2 0m	280 ∅	10	200	A1ce
37	CZA68D,10,5	xxx	68	40 ∅	250u	700	9 0	175J	M371
38	CZB68D,10,5	xxx	68	40 ∅	920u	350	9 0	175J	M371
39	CZC68D,10,5	xxx	68	40 ∅	1 8m	230	9 0	175J	M371
40	CZD68D,10,5	xxx	68	.40 ∅	250u	700	9 0	175J	M451
41	CZE68D,10,5	xxx	68	40 ∅	1 8m	230	9 0	175J	M451
42	HM68,A,B	xxx	68	400m§	1 8m	230		175A	A196c
43	M4Z68,A,-20	xx*	68	40	1 8m	230		150A	A1kk
44	MACZA68D,10,5	xxx	68	40 ∅	250u	700	9 0	175J	M453
45	MACZB68D,10,5	xxx	68	.40 ∅	920u	350	9 0	175J	M453
46	MACZC68D,10,5	xxx	68	40 ∅	1.8m	230	9 0	175J	M453
47	MACZD68D,10,5	xxx	68	40 ∅	250u	700	9 0	175J	M453
48	MACZE68D,10,5	xxx	68	40 ∅	1 8m	230	9 0	175J	M453
49	MBCZA68D,10,5	xxx	68	40 ∅	250u	700	9 0	175J	M454
50	MBCZB68D,10,5	xxx	68	40 ∅	920u	350	9 0	175J	M454
51	MBCZC68D,10,5	xxx	68	40 ∅	1 8m	230	9 0	175J	M454
52	MBCZD68D,10,5	xxx	68	40 ∅	250u	700	9 0	175J	M454
53	MBCZE68D,10,5	xxx	68	40 ∅	1 8m	230	9 0	175J	M454
54	MCCZA68D,10,5	xxx	68	40 ∅	250u	700	9 0	175J	M455
55	MCCZB68D,10,5	xxx	68	40 ∅	920u	350	9.0	175J	M455
56	MCCZC68D,10,5	xxx	68	40 ∅	1 8m	230	9 0	175J	M455
57	MCCZD68D,10,5	xxx	68	40 ∅	250u	700	9 0	175J	M455
58	MCCZE68D,10,5	xxx	68	40 ∅	1 8m	230	9.0	175J	M455
59	MDCZA68D,10,5	xxx	68	40 ∅	250u	700	9 0	150A	M410
60	MDCZB68D,10,5	xxx	68	40 ∅	920u	350	9 0	150A	M410
61	MDCZC68D,10,5	xxx	68	40 ∅	1 8m	230	9 0	150A	M410
62	MDCZD68D,10,5	xxx	68	40 ∅	250u	700	9 0	150A	M410
63	MDCZE68D,10,5	xxx	68	40 ∅	1 8m	230	9 0	150A	M410
64	MZ500-36	10	68	.4 §	1 8m	240 ∅	9 7	175J	DO7
65	MZC68A10	†	68	400m§	740u	680	9 7	175J	M468
66	MZC68B10	§†	68	400m§	250u	700		175J	M468
67	1/2Z68T5	5	68	50	1 8m	180		175	A94f
68	1N3426	10	68	50	1 0m	800	7 4	200A	P5
69	1N5266	20†	68	50	1 8m			200A	DO7
70	1N5266A,B	§∅	68	50	1 8m	230	9.7	200A	DO7
71#	DZ68A	10	68	50	3 0m	240	9 0	150A	A100
72	MZ92-68	†	68	500m§	1 8m		9 0	150J	C103
73	S5266,A,B	xxx	68	500m	1 8m	230	9.7	175	DO41
74	7JZ68	†	68	750m	1 8m	230	9.0	175	DO15
75	7Z68,A,B,D	xxxx	68	750m	1 8m	230	9 0	175	DO27
76	7Z68C	∅	68	750m	1 8m	230	9 0	175	DO27
77	7ZM68,A,B,D	xxxx	68	750m	1 8m	230	9.0	175	DO41
78	7ZM68C	∅	68	750m	1 8m	230	9 0	175	DO41
79	1N3699	20	68	750m§	1 8m	230		175S	A1az
80	1N3699A	10	68	750m§	1 8m	230		175S	A1az
81	1N3699B	5	68	750m§	1 8m	230		175S	A1az
82	MMZ68,A,-20	xx*	68	75	1.8m	230		150A	A1kk
83	1A68M,A,B	xxx	68	1.0	3 7m	150		75A	DO15
84	1E68Z,10,5	xxx	68	1 0	3 7m	150	9 0	150A	A52g
85	1M68Z,10,5	xxx	68	1 0	3.7m	150	9 0	175S	DO1
86	1N1431	5	68	1 0	2.0m	150 ∅	9 0	200A	A154
87	1N1791,A	xx	68	1 0	5.0m	125		175S	DO13
88	1N1886	10	68	1 0	3.0m	250	8 0	200C	A126
89	1N1886A	5	68	1.0	3 0m	250	8 0	200C	A126
90	1N3040,A,B	xxx	68	1 0	3 7m	150		175A	A31a
91	JAN1N3040B	5	68	1.0	3.7m	150	9 7	175A	A31c
92	1N4182	20	68	1 0	3.7m	150	9 0	175	DO29
93	1N4182A	10	68	1.0	3 7m	150	9 0	175	DO29
94	1N4182B	5	68	1.0	3 7m	150	9 0	175	DO29
95	1N4347,A,B	xxx	68	1 0	3 7m	150	9 0	300S	DO7
96♦	1N4424	20	68	1 0	3 7m	44		175S	A266a
97	1N4424A	10	68	1 0	3.7m	44	9.0	175A	A1cm
98	1N4424B	5	68	1 0	3.7m	44	9 0	175A	A1cm
99	1N4760	10	68	1 0	3 7m	150		200A	A1ay
100	1N4760A	5	68	1 0	3 7m	150		200A	A1ay
101	1N5583	20	68	1 0 §	3 7			200A	A196d
102	1N5583A	10	68	1 0 §	3 7m	150		200A	A196d
103	1N5583B	5	68	1.0 §	3 7m	150		200A	A196d
104	1N5653		68	1 0	1 0m		10	175A	DO13
105	1N5653A		68	1 0	1.0m		10	175A	DO13
106	1R68,A,B	xxx	68	1 0	3.7m	150	9 0	175A	A52c
107#	1S251	10	68	1 0	4 0m	120		150J	A56a
108#	1S3068	xx	68	1 0	5 0m	250	8.5	150	A3
109	1Z68,A,B	xxx	68	1 0	3 7	150		150	A1ay
110	AV2068	∅2	68	1.0	5 0m	155		150A	A19
111#	BZX61C68	5	68	1 0	5 0m	120	8 0	175J	A3y
112	CZ68,A,B,D	xxxx	68	1 0	10m	72	9 0	175	DO15
113	CZ68C	∅	68	1 0	10m	72	9 0	175	DO15
114	EVR68,A,B	xxx	68	1 0	3.0m	200		175A	DO27
115#	EZ68A	10	68	1 0	5.9m	2.0k	9 0		A1em
116	HW68,A,B	xxx	68	1 0	3 7m	150		175	A196
117	IDA1Z68,A,B,C∅	xxxx	68	1 0	16m			200A	A1ht
118	JZ68,A,B,D	xxxx	68	1 0	3 7m	150	9 0	175	DO15
119	JZ68C	∅	68	1 0	3 7m	150	9.0	175	DO15
120	LPM68,A,-20	xx*	68	1 0	3 7m	150		150A	A1kk
121	TC68A5B	5△∅	68	1 0	5 0m	230	05	175A	A1nj
122	TZ68,A,B,D	xxxx	68	1 0	3.7m	150	9.0	175	DO27
123	TZ68C	∅	68	1 0	3 7m	150	9.0	175	DO27
124	VR68,A,B	xxx	68	1 0	3 7m	150		125A	A1b
125	Z68,A,B,D	xxxx	68	1 0	3 7m	150	9.0	175	DO27
126	Z68C	∅	68	1 0	3 7m	150	9 0	175	DO27
127	ZA68,A,B	xxx	68	1 0	3 7m	150		150C	A1ew
128	ZB68	†	68	1 0 §	3 7m	150		150A	A1bc
129	ZD68∅,A,B	xxx	68	1 0	3 7m	135	9 0	175A	A1cm
130#	ZF68A	10	68	1 0	5 9m	122	9 0	150A	DO13
131	ZH68,A,B	xxx	68	1 0	3 7m	150	9 0	175A	DO1
132	ZM68,A,B,D	xxxx	68	1 0	3 7m	150	9.0	175	DO41
133	ZM68C	∅	68	1 0	3 7m	150	9.0	175	DO41
134#	7740	5	68	1.1	50m	120	9.5	125A	A1bu
135	1N4852,A,B	xxx	68	1 2	3 7m	150	9.7	175	DO29
136#	BZX67C68	5	68	1 3	10m	80	9.5	150J	S287
137#	ZD68#	5	68	1 3	10	80	9.5	150J	DO13
138	ZM68∅	10	68	1 3	10	80	9.5	150J	DO13
139#	ZU68	10	68	1 3	10	80	9.5	150J	A1bg
140#	ZY68	5	68	1 3	10	80	9 5	150J	A1bg
141	1N3809,A,B	xxx	68	1 5	5 5m	95	9 7	175S	C14∅
142	1N4485	5	68	1 5	3.7m	100		175A	A196
143	JAN1N4485	10	68	1 5	3 7m	100	9 7	175A	A1v
144#	1S4068,A	xx	68	1 5	5 0m	60	8 5	150A	DO1
145	1 5DKZ68,A,B	xxx	68	1 5	5 5m	95		175A	DO27
146	1.5JZ68,A,B,D	xxxx	68	1 5	5 5m	95	9 7	175	DO15
147	1.5JZ68C	∅	68	1.5	5 5m	95	9.7	175	DO15
148	1 5R68,A,B	xxx	68	1 5	5 5m	125	9 0	175A	A52c
149	1.5Z68,A,B,D	xxxx	68	1.5	5 5m	95	9 7	175	DO27
150	1.5Z68C	∅	68	1 5	5 5m	95	9.7	175	DO27
151#	BZY95C68	5	68	1.5	10m	90	65	175J	DO1
152	MZ1000-33	10	68	1 5 §	3 7m	225 ∅	9.7	175J	A1ay
153#	Z3B680CF	20§∅	68	1.5	10m	95	11	175J	DO1
154	1N4072	5	68	2.0	5 0m	230	50	100	A1nj
155	1N4072A	5	68	2.0	5.0m	230	20	100	A1nj
156	2R68,A,B	xxx	68	2.0	7 4m	125	9 0	175A	DO27
157	2VR68,A,B	xxx	68	2.0	7 4m	125			A3e
158	LMZ68,A,-20	xx*	68	2 0	7.5m	75		150A	A1kk
159	ZBC68	†	68	2.0 §	7 4m	85		150A	A1bc
160	1N5047	10	68	2.5	9.2m	57	9.0	150	A1gn
161	1N5047A	5	68	2.5	9 2m	57	9 0	150	A1gn
162#	BZX70C68	5	68	2 5	10m	90	650	150J	A171b
163	1N5090	5	68	3.0	10m	85		175A	A146j
164	3R68,A,B	xxx	68	3 0	11m	75	9 0	175A	A1rw
165	3TZ68,A,B,D	xxxx	68	3.0	10m	75		175	A1ec
166	3TZ68C	∅	68	3 0	10m	75		175	A1ec
167	3VR68,A,B	xxx	68	3 0	11m	75			A222
168	CZ5090	10	68	3 0	10m	85	620	175A	A196e
169#	FDZ68A	10	68	3 0 ∅	18m	41	9.0	150A	S303
170	M3Z68,A	xx	68	3.0	11m	91		150A	A1kk
171	MZ768	5	68	3.0	10m	85	9 5	175A	A146j
172	MZ868	10	68	3.0	10m	85	9 5	175A	A146j
173	MZ968	20	68	3 0	10m	85	9 5	175A	A146j
174#	NT3C68	5	68	3.0	5 0m	300		125J	S43a
175	ZAC68,A,B	xxx	68	3.0	3 7m	150		150C	A1ey
176	ZCC68	†	68	3.0 §	10m	85		150A	A1ey
177	3T68,A,B	xx*	68	3.5	5.0m	125			DO4
178#	4GZ68A	10	68	4.0	37m	600	9 0		S19q
179	1N4038,A,B	xxx	68	5.0	18m	75	9 7	180A	S82
180	1N4978	5	68	5.0	20m	44		175A	A146m
181	JAN1N4978	5	68	5.0	20m	50	10	175A	A248f
182♦	1N5373	20	68	5.0	20m			200A	A1ee

SYMBOLS AND CODES EXPLAINED IN INTERPRETER

2. SILICON REFERENCE DIODES

IN ORDER OF (1) REF. VOLTAGE, (2) DISSIPATION, and (3) TYPE No.

LINE No	3 TYPE No	TOLERANCE 1 20 10 5 2 ± (%)	NOM. REF VOLT. (V)	2 MAX. DISS. @ 25°C (W)	TEST CUR. Izt (A)	MAX. DYN. IMP (Ω)	TEMP. COEFF Tc	MAX. TEMP (°C)	DWG. No.
1▼	1N5373A	10	68	5 0	20m	44		200A	A1ee
2▼	1N5373B	5	68	5 0	20m	44		200A	A1ee
3▼	5ZS68,A,B	xxx	68	5 0 §	20m	44		200A	A1ts
4#	5340	10∅	68	5 0	5 0m	120		150J	A9h
5▼	CTZC68,A,B,D∅	xxxx	68	5 0 §	20m	44 ∅	9 0	175A	A1ey
6▼	CTZC68C∅	1	68	5 0 §	20m	44 ∅	9.0	175A	A1ey
7▼	CTZC68E∅	3	68	5 0 §	20m	44 ∅	9 0	175A	A1ey
8	HZ68	10	68	5 0	14m	12	6 5	165C	M221
9▼	TZC68,A,B,D	xxxx	68	5 0 §	20m	44 ∅	9.0	175A	A1ey
10▼	TZC68C	1	68	5 0 §	20m	44 ∅	9 0	175A	A1ey
11▼	TZC68E	3	68	5 0 §	20m	44 ∅	9 0	175A	A1ey
12	ZC68	†	68	5.0 §	20m	44		150A	A1ey
13#	KR58	10	68	8 0	50m	14	9 9	150A	S186
14	UZ4768	5	68	8 0	20m	50		175A	A146m
15	UZ4868	10	68	8 0	20m	50		175A	A146m
16	1N1371,A	xx	68	10	50m	14		175A	DO4
17	1N1371B	20	68	10	50m	14			S11e
18	1N1371C,CA∅	xx	68	10 §	50m	14		175J	S19a
19	1N1422	5	68	10	20m	15 ∅	9 0	175C	S154
20	1N1833	10	68	10	50m	14	10	150A	S19a
21	1N1833A	5	68	10	50m	14	10	150A	S19a
22	1N1833C,CA∅	xx	68	10	50m	14	10	150A	S19a
23	1N1902	10	68	10	3 0m	250	8.0	200A	S82
24	1N1902A	5	68	10	3 0m	250	8.0	200A	S82
25	1N3001,A,B	xxx	68	10	37m	18		175C	DO4⧄
26	JAN1N3001B,RB	5	68	10	37m	18	9.7	150C	DO4
27	1N4282	20	68	10	37m	18	9 0	175C	S134
28	1N4282A	10	68	10	37m	18	9.0	175C	S134
29	1N4282B	5	68	10	37m	18	9 0	175C	S134
30	JAN1N4282B	5	68	10 §	37m	18	9 7	175S	S134a
31#	1S293	10	68	10	40m	14		150J	S19g
32#	1S5068,A	xx	68	10	50m	15	10	150C	DO4
33#	1S5068C∅	10	68	10	50m	15	10	150C	DO4
34#	1S6068	10	68	10	20m	50	8 0	150	DO4
35#	1S6068A	5	68	10	20m	50	8 0	150	DO4
36	10PZ68,A,B,D	xxxx	68	10	37m	18	9 0	175	DO4
37	10PZ68C	⧄	68	10	37m	18	9.0	175	DO4
38	10RZ68,A,B,D	xxxx	68	10	50m	14	10	155	DO4
39	10RZ68C	⧄	68	10	50m	14	10	155	DO4
40	AV8068	∅2	68	10	50m	21		150A	S11
41#	GZ68A	10	68	10 ⧄	30m	24	9.0	150A	DO4
42#	PZ68A	10	68	10 ⧄	30m	24	9 0	150A	S95a
43#	Z5D680CF	20§∅	68	10	50m	15	9.5	150J	DO4
44#	ZC5068	5	68	10	20m	50	8 8	150A	S19
45#	ZD5068	10	68	10	20m	50	8 8	150A	S19
46#	4140	10∅	68	15	60m	14		150J	S87
47#	4240	10∅	68	15	60m	14		150J	S87
48#	BZY93C68	5	68	20 §	200m	10	65	175J	DO4⧄
49#	SZ68B	5	68	25	100m	8 0	10	150B	S16
50#	ZL68	10	68	25 ⧄	10	80	9 5	150J	M41
51#	ZX68	5	68	25 ⧄	10	80	9 5	150J	M41
52#	4340	10∅	68	30	60m	14		150J	S87
53#	4440	10∅	68	30	60m	14		150J	S87
54	1N2834,A,B	xxx	68	50	180m	8.0	9 0	175S	C5a
55	JAN1N2834B,RB	5	68	50	180m	8 0	9 7	150C	C5a
56	1N3336	20	68	50	180m	8 0	9 0	175J	DO5
57	1N3336A	10	68	50	180m	8 0	9 0	175J	DO5
58	1N3336B	5	68	50	180m	8 0	9 0	175J	DO5
59	JAN1N3336B,RB	5	68	50	180m	8 0	9 7	150	DO5
60	50T68,A,B	xx*	68	50	180m	8 0	9.0		S19e
61	AV51068	5	68	50	180m	8.0	9.0	150C	C5a
62#	BZY91C68	5	68	75 §	500m	2 4	9 4	175J	DO5⧄
63#	4540	10∅	68	100	75m	12		150J	S84
64#	4640	10∅	68	100	75m	12		150J	S84
65#	ZC768	5	68	100 §	25	65	9 2	175J	S125d⧄
66	1N1969	10	68 5	400m	200u	900 ∅	11		A82g
67	HRE69	5	69		10m	110	50	70A	A129
68	HRE69A	5	69		10m	110	50	125A	A129
69	1N1886B	1	69	1 0	3.0m	35 △	8 0	175A	DO13
70	AV14	10	69	1 0	5 0m	155		150A	A19
71	AV2069	∅2	69	1 0	5 0m	155		150A	A19
72	AV114	10	69	10	50m	21		150A	S11
73	AV8069	∅2	69	10	50m	21		150A	S11
74	AV51069	5	69	50	180m	8 0	9.0	150C	C5a
75	DSZ3070	10	70		10m	90	9 5		A266
76	IDAZ70,A,B,C∅	xxxx	70	500m	3.0m			200A	A1hc
77	AV2070	∅2	70	1 0	5.0m	155		150A	A19
78	UZ8770	5	70	1.0	3.7m	150	9 5	175	A146h
79	UZ8870	10	70	1 0	3.7m	150	9.5	175	A146h
80	1N5091	5	70	3 0	10m	90		175A	A146j
81	CZ5091	10	70	3.0	10m	90	680	175A	A196e
82	MZ770	5	70	3 0	10m	90	9 5	175A	A146j
83	MZ870	10	70	3 0	10m	90	9 5	175A	A146j
84	MZ970	20	70	3 0	10m	90	9.5	175A	A146j
85	UZ770	5	70	3.0	10m	90	9 5	175A	A60
86	UZ870	10	70	3 0	10m	90	9 5	175A	A146f
87	UZ970	20	70	3.0	10m	90	9 5	175A	A60
88	1N5123	5	70	5.0	20m	45		175A	A146m
89	DSZ5770	5	70	5 0	20m	50	10	175A	A60r
90	DSZ5870	10	70	5 0	20m	50	10	175A	A60r
91	MZ5770	5	70	5.0	20m	45	9 5	175A	A60f
92	MZ5870	10	70	5.0	20m	45	9 5	175A	A60f
93	MZ5970	20	70	5 0	20m	45	9 5	175A	A60f
94▼	UZ5770	5	70	5 0	20m	50	10	175A	A146m
95♦	UZ5870	10	70	5 0	20m	50	10	175A	A146m
96	UZ5970	20	70	5 0	20m	45 ∅	9 5	175A	A146m
97	AV8070	∅2	70	10	50m	21		150A	S11
98	UZ7770	5	70	10	35m	40	9 5	175	S277⧄
99	UZ7870	10	70	10	35m	40	9 5	175	S277⧄
100	UZ7970	20	70	10	35m	40	9 5	175	S277⧄
101	AV51070	5	70	50	180m	8 0	9.0	150C	C5a
102	1N236	10∅	71	15	.20m			200A	C12a
103▼	1N1324	10	71	150m	200u		12	150A	C1
104▼	1N1324A	5	71	150m	200u		12	150A	C1
105	PS6324	15	71	500m		200m		200A	DO14
106	AV2071	∅2	71	1 0	5 0m	155		150A	A19
107	AV8071	∅2	71	10	50m	21		150A	S11
108	AV51071	5	71	50	180m	8.0	9 0	150C	C5a
109	AV2072	∅2	72	1 0	5 0m	155		150A	A19
110	IDA1Z72,A,B,C∅	xxxx	72	1.0	16m			200A	A1ht
111	AV8072	∅2	72	10	50m	21		150A	S11
112	AV51072	5	72	50	170m	8.5	9.0	150C	C5a
113	AV2073	∅2	73	1 0	5 0m	155		150A	A19
114	AV8073	∅2	73	10	50m	21		150A	S11
115	AV51073	5	73	50	170m	8 5	9 0	150C	C5a
116	HRE73.5	5	73 5		10m	115	50	70A	A129
117	HRE73.5A	5	73.5		10m	115	50	125A	A129
118	IDAZ74,A,B,C∅	xxxx	74	500m	3.0m			200A	A1hc
119	AV2074	∅2	74	1 0	5 0m	155		150A	A19
120	AV8074	∅2	74	10	50m	21		150A	S11
121	AV51074	5	74	50	170m	9 0	9.0	150C	C5a
122	DSZ3075	10	75		10m	100	9 5		A266
123	1/4A75,A,B	xxx	75	.25	.83m	450	9.5	175	DO7
124	1/4M75Z,10,5	xxx	75	250m	830u	450	9 2	175J	A1cy
125	25N75	20	75	25	.83m	450		250	DO7
126	1N735,A	xx	75	.25	2 0m	240	9 6	175A	DO7
127	1N735B	20	75	25	2.0m	240			DO7
128	1N4131	5	75	25	.25m	700		200J	DO7
129	1N982,A,B	xxx	75	40	1.7m	270	9 0	175S	DO7
130	JAN1N982B	5	75	.40	1 7m	270	9.8	175A	DO7
131	JAN1N4131	5	75	400m	250u	700	10	175A	A1sx
132▼	1N5757B	5	75	400m	2 0m	255	8.0	200J	DO35
133#	5541	5	75	40	2 0m	300	9 5	125A	A1ce
134#	BZX79C75	5	75	400m	2.0m	255	600	200J	A257
135#	BZY94C75	5	75	40	2 0m	250 ∅		150J	DO7
136	CD3173	5	75	.40	2.0m	320 ∅	10	200	A1ce
137	CZA75D,10,5	xxx	75	40 ⧄	250u	700	9.0	175J	M371
138	CZB75D,10,5	xxx	75	40 ⧄	830u	450	9 0	175J	M371
139	CZC75D,10,5	xxx	75	40 ⧄	1 7m	270	9.0	175J	M371
140	CZD75D,10,5	xxx	75	40 ⧄	250u	700	9 0	175J	M451
141	CZE75D,10,5	xxx	75	40 ⧄	1 7m	270	9.0	175J	M451
142	HM75,A,B	xxx	75	400m§	1 7m	270		175A	A196c
143	M4Z75,A,-20	xx*	75	40	1.7m	270		150A	A1kk
144	MACZA75D,10,5	xxx	75	.40 ⧄	250u	700	9.0	175J	M453
145	MACZB75D,10,5	xxx	75	40 ⧄	830u	450	9.0	175J	M453
146	MACZC75D,10,5	xxx	75	40 ⧄	1 7m	270	9 0	175J	M453
147	MACZD75D,10,5	xxx	75	40 ⧄	250u	700	9.0	175J	M453
148	MACZE75D,10,5	xxx	75	.40 ⧄	1 7m	270	9.0	175J	M453
149	MBCZA75D,10,5	xxx	75	40 ⧄	250u	700	9.0	175J	M454
150	MBCZB75D,10,5	xxx	75	.40 ⧄	830u	450	9.0	175J	M454
151	MBCZC75D,10,5	xxx	75	40 ⧄	1 7m	270	9.0	175J	M454
152	MBCZD75D,10,5	xxx	75	40 ⧄	250u	700	9 0	175J	M454
153	MBCZE75D,10,5	xxx	75	40 ⧄	1 7m	270	9.0	175J	M454
154	MCCZA75D,10,5	xxx	75	.40 ⧄	250u	700	9.0	175J	M455
155	MCCZB75D,10,5	xxx	75	40 ⧄	830u	450	9.0	175J	M455
156	MCCZC75D,10,5	xxx	75	40 ⧄	1.7m	270	9.0	175J	M455
157	MCCZD75D,10,5	xxx	75	.40 ⧄	250u	700	9.0	175J	M455
158	MCCZE75D,10,5	xxx	75	40 ⧄	1.7m	270	9 0	175J	M455
159	MDCZA75D,10,5	xxx	75	.40 ⧄	250u	700	9.0	150A	M410
160	MDCZB75D,10,5	xxx	75	.40 ⧄	830u	450	9 0	150A	M410
161	MDCZC75D,10,5	xxx	75	.40 ⧄	1.7m	270	9 0	150A	M410
162	MDCZD75D,10,5	xxx	75	.40 ⧄	250u	700	9.0	150A	M410
163	MDCZE75D,10,5	xxx	75	.40 ⧄	1.7m	270	9.0	150A	M410
164	MZ500-37	10	75	.40 §	1.7m	280 ∅	9 8	175J	DO7
165	MZC75A10	†	75	400m§	670u	800	9.8	175J	M468
166	MZC75B10	§†	75	400m§	250u	700		175J	M468
167	1/2Z75T5	5	75	50	1.7m	210		175	A94f
168	1N5267	20†	75	50	1.7m			200A	DO7
169	1N5267A,B	§∅	75	50	1.7m	270	9 8	200A	DO7
170	MZ92-75	†	75	500m§	1.7m		9 0	150J	C103
171	S5267,A,B	xxx	75	500m	1.7m	270	9 8	175	DO41
172	7JZ75	†	75	750m	1 7m	270	9.0	175	DO15
173	7Z75,A,B,D	xxxx	75	750m	1 7m	270	9.0	175	DO27
174	7Z75C	⧄	75	750m	1 7m	270	9.0	175	DO27
175	7ZM75,A,B,D	xxxx	75	750m	1.7m	270	9.0	175	DO41
176	.7ZM75C	⧄	75	750m	1.7m	270	9 0	175	DO41
177	1N3700	20	75	750m§	1.7m	270		175S	A1az
178	1N3700A	10	75	750m§	1.7m	270		175S	A1az
179	1N3700B	5	75	750m§	1.7m	270		175S	A1az

SYMBOLS AND CODES EXPLAINED IN INTERPRETER

2. SILICON REFERENCE DIODES

IN ORDER OF (1) REF. VOLTAGE, (2) DISSIPATION, and (3) TYPE No.

LINE No	TYPE No.	TOLERANCE 20 10 5 2 ± (%)	NOM. REF. VOLT. (V)	MAX. DISS. @ 25°C (W)	TEST CUR. Izt (A)	MAX DYN. IMP (Ω)	TEMP COEFF Tc	MAX. TEMP (°C)	DWG. No
1	MMZ75,A,-20								
		xx*	75	75	1 7m	270		150A	A1kk
2	1A75M,A,B	xxx	75	1 0	3 3m	175		75A	DO15
3	1E75Z,10,5	xxx	75	1 0	3 3m	175	9 0	150A	A52g
4	1M75Z,10,5	xxx	75	1 0	3 3m	175	9 0	175S	DO1
5	1N1792,A	xx	75	1 0	5 0m	150		175S	DO13
6	1N3041,A,B	xxx	75	1 0	3 3m	175		175A	A31a
7	JAN1N3041B	5	75	1 0	3 3m	175	9 8	175A	A31c
8	1N4183	20	75	1 0	3 3m	175	9.0	175	DO29
9	1N4183A	10	75	1 0	3 3m	175	9 0	175	DO29
10	1N4183B	5	75	1 0	3 3m	175	9 0	175	DO29
11	1N4348,A,B	xxx	75	1 0	3 3m	175	9 0	300S	DO7
12♦	1N4425	20	75	1.0	3 3m	60		175S	A266a
13	1N4425A	10	75	1 0	3 3m	60	9 0	175A	A1cm
14	1N4425B	5	75	1.0	3 3m	60	9 0	175A	A1cm
15	1N4761	10	75	1 0	3 3m	175		200A	A1ay
16	1N4761A	5	75	1.0	3 3m	175		200A	A1ay
17	1N5584	20	75	1 0 §	3 3			200A	A196d
18	1N5584A	10	75	1 0 §	3 3m	175		200A	A196d
19	1N5584B	5	75	1 0 §	3 3m	175		200A	A196d
20	1N5654		75	1 0	1 0m		10	175A	DO13
21	1N5654A		75	1 0	1 0m		10	175A	DO13
22	1R75,A,B	xxx	75	1 0	3 3m	175	9 0	175A	A52c
23#	1S252	10	75	1 0	4 0m	150		150J	A56a
24#	1S3075	xx	75	1 0	5 0m	300	9 0	150	A3
25	1Z75,A,B	xxx	75	1 0	3 3	175		150	A1ay
26	AV2075	Ø2	75	1 0	5 0m	155		150A	A19
27#	BZX61C75	5	75	1 0	5 0m	135	8 0	175J	A3y
28	CZ75,A,B,D	xxxx	75	1 0	10m	75	9 0	175	DO15
29	CZ75C	∅	75	1 0	10m	75	9 0	175	DO15
30	EVR75,A,B	xxx	75	1 0	3 0m	225		175A	DO27
31	HW75,A,B	xxx	75	1 0	3 3m	175		175	A196
32	JZ75,A,B,D	xxxx	75	1 0	3 3m	175	9 0	175	DO15
33	JZ75C	∅	75	1 0	3 3m	175	9 0	175	DO15
34	LPM75,A,-20								
		xx*	75	1 0	3 3m	175		150A	A1kk
35	TC75A5B	5△∅	75	1 0	5 0m	250	05	175A	A1nj
36	TZ75,A,B,D	xxxx	75	1 0	10m	75	9.0	175	DO27
37	TZ75C	∅	75	1 0	10m	75	9 0	175	DO27
38	UZ8775	5	75	1 0	3 3m	175	9 5	175	A146h
39	UZ8875	10	75	1 0	3 3m	175	9.5	175	A146h
40	VR75,A,B	xxx	75	1 0	3.3m	175		125A	A1b
41	Z75,A,B,D	xxxx	75	1 0	3.3m	175	9 0	175	DO27
42	Z75C	∅	75	1 0	3 3m	175	9 0	175	DO27
43	ZA75,A,B	xxx	75	1 0	3 3m	175		150C	A1ew
44	ZB75	†	75	1 0 §	3 3m	175		150A	A1bc
45	ZD75∅,A,B	xxx	75	1 0	3.3m	160	9 0	175A	A1cm
46	ZH75,A,B	xxx	75	1 0	3 3m	175	9 0	175A	DO1
47	ZM75,A,B,D	xxxx	75	1 0	3 3m	175	9 0	175	DO41
48	ZM75C	∅	75	1 0	3 3m	175	9 0	175	DO41
49#	7741	5	75	1 1	50m	175	9 5	125A	A1bu
50	1N4853,A,B	xxx	75	1 2	3 3m	175	9 8	175	DO29
51#	BZX67C75	5	75	1 3	10m	100	9.5	150J	S287
52#	ZD75#	5	75	1 3	10	100	9 5	150J	DO13
53#	ZY75	5	75	1 3	10	100	9 5	150J	A1bg
54	1N3810,A,B	xxx	75	1 5	5 0m	110	9 8	175S	C14∅
55	1N4486	5	75	1 5	3 3m	130		175A	A196
56	JAN1N4486	10	75	1 5	3 3m	130	9 8	175A	A1v
57#	1S4075,A	xx	75	1 5	5 0m	68	9 0	150A	DO1
58	1 5DKZ75,A,B								
		xxx	75	1 5	5 0m	110		175A	DO27
59	1 5JZ75,A,B,D								
		xxxx	75	1 5	5 0m	110	9 8	175	DO15
60	1 5JZ75C	∅	75	1 5	5 0m	110	9 8	175	DO15
61	1 5R75,A,B	xxx	75	1 5	5 0m	150	9 0	175A	A52c
62	1.5Z75,A,B,D								
		xxxx	75	1 5	5 0m	110	9 8	175	DO27
63	1 5Z75C	∅	75	1 5	5 0m	110	9 8	175	DO27
64#	BZY95C75	5	75	1 5	10m	100	70	175J	DO1
65	MZ1000-34	10	75	1 5 §	3 3m	263 ∅	9 8	175J	A1ay
66#	Z3B750CF	20§∅	75	1 5	10m	110	11	175J	DO1
67	1N4073	5	75	2 0	5 0m	250	50	100	A1nj
68	1N4073A	5	75	2 0	5 0m	250	20	100	A1nj
69	2R75,A,B	xxx	75	2 0	6 7m	150	9 0	175A	DO27
70	2VR75,A,B	xxx	75	2 0	6 7m	150			A3e
71	LMZ75,A,-20								
		xx*	75	2 0	6 5m	87		150A	A1kk
72	ZBC75	†	75	2 0 §	6.6m	100		150A	A1bc
73	1N5048	10	75	2.5	8 3m	66	9 0	150	A1gn
74	1N5048A	5	75	2 5	8 3m	66	9 0	150	A1gn
75#	BZX70C75	5	75	2 5	10m	100	700	150J	A171b
76	1N5092	5	75	3 0	10m	100		175A	A146j
77	3R75,A,B	xxx	75	3.0	10m	90	9 0	175A	A1rw
78	3TZ75,A,B,D								
		xxxx	75	3.0	10m	90		175	A1ec
79	3TZ75C	∅	75	3 0	10m	90		175	A1ec
80	3VR75,A,B	xxx	75	3 0	10m	90			A222
81	CZ5092	10	75	3 0	10m	100	700	175A	A196e
82	M3Z75,A	xx	75	3.0	10m	100		150A	A1kk
83	MZ775	5	75	3 0	10m	100	9.5	175A	A146j
84	MZ875	10	75	3.0	10m	100	9 5	175A	A146j
85	MZ975	20	75	3 0	10m	100	9 5	175A	A146j
86#	NT3C75	5	75	3 0	5 0m	300		125J	S43a
87	UZ775	5	75	3 0	10m	100	9 5	175A	A146f
88	UZ875	10	75	3 0	10m	100	9 5	175A	A146f
89	UZ975	20	75	3 0	10m	100	9.5	175A	A146f
90	ZAC75,A,B	xxx	75	3 0	3.3m	175		150C	A1ey
91	ZCC75	†	75	3 0 §	10m	100		150A	A1ey
92	3T75,A,B	xx*	75	3 5	5 0m	150			DO4
93	1N4039,A,B	xxx	75	5 0	17m	100	9 8	180A	S82
94	1N4979	5	75	5 0	20m	45		175A	A146m
95	JAN1N4979	5	75	5 0	20m	55	10	175A	A248f
96♦	1N5374	20	75	5 0	20m			200A	A1ee
97▼	1N5374A	10	75	5 0	20m	45		200A	A1ee
98▼	1N5374B	5	75	5 0	20m	45		200A	A1ee
99▼	5ZS75,A,B	xxx	75	5 0 §	20m	45		200A	A1ts
100#	5341	10∅	75	5 0	5 0m	175		150J	A9h
101▼	CTZC75,A,B,D∅								
		xxxx	75	5 0 §	20m	45 ∅	9 0	175A	A1ey
102▼	CTZC75C∅	1	75	5 0 §	20m	45 ∅	9 0	175A	A1ey
103▼	CTZC75E∅	3	75	5.0 §	20m	45 ∅	9 0	175A	A1ey
104	DSZ5775	5	75	5 0	15m	55	10	175A	A60r
105	DSZ5875	10	75	5.0	15m	55	10	175A	A60r
106	MZ5775	5	75	5 0	15m	50	9 5	175A	A60f
107	MZ5875	10	75	5.0	15m	50	9 5	175A	A60f
108	MZ5975	20	75	5 0	15m	50	9.5	175A	A60f
109▼	TZC75,A,B,D								
		xxxx	75	5 0 §	20m	45 ∅	9 0	175A	A1ey
110▼	TZC75C	1	75	5 0 §	20m	45 ∅	9 0	175A	A1ey
111▼	TZC75E	3	75	5 0 §	20m	45 ∅	9 0	175A	A1ey
112▼	UZ5775	5	75	5 0	15m	55	10	175A	A146m
113♦	UZ5875	10	75	5 0	15m	55	10	175A	A146m
114	UZ5975	20	75	5 0	15m	50 ∅	9 5	175A	A146m
115	ZC75	†	75	5.0 §	20m	45		150A	A1ey
116	UZ4775	5	75	8 0	20m	55		175A	A146m
117	UZ4875	10	75	8 0	20m	55		175A	A146m
118	1N1372,A	xx	75	10	50m	20		175A	DO4
119	1N1372B	20	75	10	50m	20			S11e
120	1N1372C,CA∅								
		xx	75	10 §	50m	20		175J	S19a
121	1N1834	10	75	10	50m	20	11	150A	S19a
122	1N1834A	5	75	10	50m	20	11	150A	S19a
123	1N1834C,CA∅								
		xx	75	10	50m	20	11	150A	S19a
124	1N3002,A,B	xxx	75	10	33m	22		175C	DO4∅
125	JAN1N3002B,RB								
		5	75	10	33m	22	9 8	150C	DO4
126	1N4283	20	75	10	33m	22	9.0	175C	S134
127	1N4283A	10	75	10	33m	22	9.0	175C	S134
128	1N4283B	5	75	10	33m	22	9.0	175C	S134
129	JAN1N4283B	5	75	10 §	33m	22	9 8	175S	S134a
130#	1S294	10	75	10	40m	16		150J	S19g
131#	1S5075,A	xx	75	10	50m	30	11	150C	DO4
132#	1S5075C∅	10	75	10	50m	30	11	150C	DO4
133#	1S6075	10	75	10	20m	50	9 0	150	DO4
134#	1S6075A	5	75	10	20m	50	9.0	150	DO4
135	10PZ75,A,B,D								
		xxxx	75	10	33m	22	9 0	175	DO4
136	10PZ75C	∅	75	10	33m	22	9 0	175	DO4
137	10RZ75,A,B,D								
		xxxx	75	10	50m	20	11	155	DO4
138	10RZ75C	∅	75	10	50m	20	11	155	DO4
139	AV8075	Ø2	75	10	50m	21		150A	S11
140	UZ7775	5	75	10	30m	45	9 5	175	S277∅
141	UZ7875	10	75	10	30m	45	9 5	175	S277∅
142	UZ7975	20	75	10	30m	45	9 5	175	S277∅
143#	Z5D750CF	20§∅	75	10	50m	30	9 5	150J	DO4
144#	ZC5075	5	75	10	20m	50	8.8	150A	S19
145#	ZD5075	10	75	10	20m	50	8.8	150A	S19
146#	4141	10∅	75	15	50m	20		150J	S87
147#	4241	10∅	75	15	50m	20		150J	S87
148#	BZY93C75	5	75	20 §	200m	10	70	175J	DO4∅
149#	ZX75	5	75	25 ∅	10	100	9 5	150J	M41
150#	4341	10∅	75	30	50m	20		150J	S87
151#	4441	10∅	75	30	50m	20		150J	S87
152#	1S1540	10	75	35	20m			150	T03
153	1N2835,A,B	xxx	75	50	170m	9 0	9 0	175S	C5a
154	JAN1N2835B,RB								
		5	75	50	170m	9 0	9.8	150C	C5a
155	1N3337	20	75	50	170m	9 0	9 0	175J	DO5
156	1N3337A	10	75	50	170m	9 0	9 0	175J	DO5
157	1N3337B	5	75	50	170m	9 0	9 0	175J	DO5
158	JAN1N3337B,RB								
		5	75	50	170m	9.0	9.8	150	DO5
159	50T75,A,B	xx*	75	50	170m	9 0	9 0		S19e
160	AV51075	5	75	50	170m	9 0	9 0	150C	C5a
161#	BZY91C75	5	75	75 §	500m	2 6	9 5	175J	DO5∅
162#	4541	10∅	75	100	60m	18		150J	S84
163#	4641	10∅	75	100	60m	18		150J	S84
164#	ZC775	5	75	100 §	25	70	9 2	175J	S125d∅
165	PS1509	5	75 6	25	10m	135	20	150A	A1gc
166	PS1509A	5	75 6	25	10m	135	10	150A	A1gc
167	HRE76	5	76		10m	120	50	70A	A129
168	HRE76A	5	76		10m	120	50	125A	A129
169	AV2076	Ø2	76	1 0	5 0m	155		150A	A19
170	IDA1Z76,A,B,C∅								
		xxxx	76	1 0	15m			200A	A1ht
171	AV8076	Ø2	76	10	50m	21		150A	S11
172	AV51076	5	76	50	170m	9.0	9 0	150C	C5a
173	AV2077	Ø2	77	1 0	5 0m	220		150A	A19
174	AV8077	Ø2	77	10	50m	35		150A	S11
175	AV51077	5	77	50	160m	10	9 0	150C	C5a
176	IDAZ78,A,B,C∅								
		xxxx	78	500m	3 0m			200A	A1hc
177	AV2078	Ø2	78	1 0	5.0m	220		150A	A19
178	AV8078	Ø2	78	10	50m	35		150A	S11
179	AV51078	5	78	50	160m	10	9.0	150C	C5a
180	AV2079	Ø2	79	1 0	5 0m	220		150A	A19
181	AV8079	Ø2	79	10	50m	35		150A	S11
182	AV51079	5	79	50	160m	10	9.0	150C	C5a
183	DSZ3080	10	80		10m	115	9 5		A266
184	HRE80	5	80		10m	130	50	70A	A129
185	HRE80A	5	80		10m	130	50	125A	A129
186	AV2080	Ø2	80	1 0	5 0m	220		150A	A19
187	IDA1Z80,A,B,C∅								
		xxxx	80	1 0	15m			200A	A1ht
188	UZ8780	5	80	1 0	3 0m	200	9 5	175	A146h
189	UZ8880	10	80	1.0	3 0m	200	9 5	175	A146h
190	VR80,A,B	xx*	80	1.0	2.0m	280	10	125C	A1ex
191	2VR80,A,B	xx*	80	2 0	2 0m	280			A3e
192	1N5093	5	80	3.0	10m	115		175A	A146j
193	CZ5093	10	80	3.0	10m	115	710	175A	A196e
194	MZ780	5	80	3 0	10m	115	9 5	175A	A146j
195	MZ880	10	80	3 0	10m	115	9 5	175A	A146j
196	MZ980	20	80	3.0	10m	115	9 5	175A	A146j
197	UZ780	5	80	3 0	10m	115	9 5	175A	A60
198	UZ880	10	80	3.0	10m	115	9 5	175A	A146f
199	UZ980	20	80	3.0	10m	115	9 5	175A	A60
200	1N5124	5	80	5.0	15m	60		175A	A146m
201	DSZ5780	5	80	5.0	15m	80	10	175A	A60r

SYMBOLS AND CODES EXPLAINED IN INTERPRETER

2. SILICON REFERENCE DIODES

IN ORDER OF (1) REF. VOLTAGE, (2) DISSIPATION, and (3) TYPE No.

LINE No.	3 TYPE No	TOLERANCE 1 20 10 5 2 ± (%)	NOM. REF. VOLT. (V)	2 MAX. DISS. @ 25°C (W)	TEST CUR. Izt (A)	MAX. DYN. IMP. (Ω)	TEMP. COEFF Tc	MAX. TEMP (°C)	DWG. No.
1	DSZ5880	10	80	5.0	15m	80	10	175A	A60r
2	MZ5780	5	80	5 0	15m	60	9.5	175A	A60f
3	MZ5880	10	80	5 0	15m	60	9.5	175A	A60f
4	MZ5980	20	80	5 0	15m	60	9 5	175A	A60f
5▼	UZ5780	5	80	5 0	15m	80	10	175A	A146m
6♦	UZ5880	10	80	5.0	15m	80	10	175A	A146m
7	UZ5980	20	80	5.0	15m	60 Ø	9.5	175A	A146m
8	AV8080	Ø2	80	10	50m	35		150A	S11
9	UZ7780	5	80	10	30m	60	9 5	175	S277⧄
10	UZ7880	10	80	10	30m	60	9 5	175	S277⧄
11	UZ7980	20	80	10	30m	60	9.5	175	S277⧄
12	AV51080	5	80	50	150m	11	9.0	150C	C5a
13	AV2081	Ø2	81	1.0	5.0m	220		150A	A19
14	AV8081	Ø2	81	10	50m	35		150A	S11
15	AV51081	5	81	50	150m	11	9 0	150C	C5a
16	1N1997	10	82	150m	200u	1.2k	12	150	C1
17	1N1997A	5	82	150m	200u	1.2k	12	150	C1
18	1N1997B	1	82	150m	200u	1.2k	12	150	C1
19	1N1943,A,B	xx1	82	20	20m	1.2k	12	150A	A82e
20#	RZ82A	10	82	.20	47m	33	9 2	125A	DO5
21	1/4A82,A,B	xxx	82	.25	76m	550	9.5	175	DO7
22	1/4M82Z,10,5	xxx	82	250m	760u	550	9 3	175J	A1cy
23	25N82	20	82	25	76m	550		250	DO7
24	1N736,A	xx	82	25	2.0m	280	9 6	175A	DO7
25	1N736B	20	82	25	2 0m	280			DO7
26	1N4132	5	82	25	25m	800		200J	DO7
27#	MZ82A	10	82	25	1.2m	680	9.2	150A	DO7
28	1N983,A,B	xxx	82	40	1 5m	330	9.0	175S	DO7
29	JAN1N983B	5	82	40	1 5m	330	9 8	175A	DO7
30	JAN1N4132	5	82	400m	250u	800	10	175A	A1sx
31	CD3174	5	82	40	2.0m	350 Ø	10	200	A1ce
32	CZA82D,10,5	xxx	82	40 ⧄	250u	800	9 0	175J	M371
33	CZB82D,10,5	xxx	82	40 ⧄	760u	550	9 0	175J	M371
34	CZC82D,10,5	xxx	82	.40 ⧄	1.5m	330	9.0	175J	M371
35	CZD82D,10,5	xxx	82	40 ⧄	250u	800	9 0	175J	M451
36	CZE82D,10,5	xxx	82	40 ⧄	1 5m	330	9 0	175J	M451
37	HM82,A,B	xxx	82	400m§	1 5m	330		175A	A196c
38	M4Z82,A,-20	xx*	82	40	1 5m	230		150A	A1kk
39	MACZA82D,10,5	xxx	82	.40 ⧄	250u	800	9 0	175J	M453
40	MACZB82D,10,5	xxx	82	40 ⧄	760u	550	9.0	175J	M453
41	MACZC82D,10,5	xxx	82	40 ⧄	1 5m	330	9 0	175J	M453
42	MACZD82D,10,5	xxx	82	40 ⧄	250u	800	9 0	175J	M453
43	MACZE82D,10,5	xxx	82	.40 ⧄	1 5m	330	9.0	175J	M453
44	MBCZA82D,10,5	xxx	82	.40 ⧄	250u	800	9.0	175J	M454
45	MBCZB82D,10,5	xxx	82	40 ⧄	760u	550	9 0	175J	M454
46	MBCZC82D,10,5	xxx	82	40 ⧄	1 5m	330	9 0	175J	M454
47	MBCZD82D,10,5	xxx	82	40 ⧄	250u	800	9 0	175J	M454
48	MBCZE82D,10,5	xxx	82	.40 ⧄	1 5m	330	9 0	175J	M454
49	MCCZA82D,10,5	xxx	82	40 ⧄	250u	800	9 0	175J	M455
50	MCCZB82D,10,5	xxx	82	40 ⧄	760u	550	9.0	175J	M455
51	MCCZC82D,10,5	xxx	82	40 ⧄	1 5m	330	9.0	175J	M455
52	MCCZD82D,10,5	xxx	82	40 ⧄	250u	800	9 0	175J	M455
53	MCCZE82D,10,5	xxx	82	40 ⧄	1 5m	330	9.0	175J	M455
54	MDCZA82D,10,5	xxx	82	40 ⧄	250u	800	9 0	150A	M410
55	MDCZB82D,10,5	xxx	82	40 ⧄	760u	550	9 0	150A	M410
56	MDCZC82D,10,5	xxx	82	40 ⧄	1.5m	330	9 0	150A	M410
57	MDCZD82D,10,5	xxx	82	40 ⧄	250u	800	9 0	150A	M410
58	MDCZE82D,10,5	xxx	82	40 ⧄	1 5m	330	9 0	150A	M410
59	MZ500-38	10	82	.4 §	1 5m	340 Ø	9 8	175J	DO7
60	MZC82A10	†	82	400m§	610u	980	9 8	175J	M468
61	MZC82B10	§†	82	400m§	250u	800		175J	M468
62	1/2Z82T5	5	82	50	1 5m	260		175	A94f
63	1N3427	10	82	50	1 0m	960	7 8	200A	P5
64	1N5268	20†	82	50	1 5m			200A	DO7
65	1N5268A,B	§Ø	82	50	1.5m	230	9 8	200A	DO7
66#	DZ82A	10	82	50	2 4m	330	9 2	150A	A100
67	IDAZ82,A,B,CØ	xxxx	82	500m	3 0m			200A	A1hc
68	MZ92-82	†	82	500m§	1 5m		9 0	150J	C103
69	PS6325	15	82	50		20		200A	DO14
70	S5268,A,B	xxx	82	500m	1 5m	330	9 8	175	DO41
71	7JZ82	†	82	750m	1 5m	330	9.0	175	DO15
72	7Z82,A,B,D	xxxx	82	750m	1 5m	330	9 0	175	DO27
73	7Z82C	⧄	82	750m	1 5m	330	9 0	175	DO27
74	7ZM82,A,B,D	xxxx	82	750m	1 5m	330	9 0	175	DO41
75	7ZM82C	⧄	82	750m	1 5m	330	9 0	175	DO41
76	1N3701	20	82	750m§	1 5m	330		175S	A1az
77	1N3701A	10	82	750m§	1 5m	330		175S	A1az
78	1N3701B	5	82	750m§	1 5m	330		175S	A1az
79	MMZ82,A,-20	xx*	82	.75	1 5m	330		150A	A1kk

LINE No.	3 TYPE No.	TOLERANCE 1 ± (%)	NOM. REF. VOLT. (V)	2 MAX. DISS @ 25°C (W)	TEST CUR Izt (A)	MAX. DYN. IMP. (Ω)	TEMP. COEFF Tc	MAX. TEMP (°C)	DWG. No.
80	1A82M,A,B	xxx	82	1 0	3 0m	200		75A	DO15
81	1E82Z,10,5	xxx	82	1.0	3 0m	200	9 0	150A	A52g
82	1M82Z,10,5	xxx	82	1.0	3 0m	200	9 0	175S	DO1
83	1N1793,A	xx	82	1 0	5 0m	175		175S	DO13
84	1N1887	10	82	1 0	3 0m	325	8.6	200C	A126
85	1N1887A	5	82	1 0	3 0m	325	8 6	200C	A126
86	1N3042,A,B	xxx	82	1.0	3.0m	200		175A	A31a
87	JAN1N3042B	5	82	1.0	3 0m	200	9.8	175A	A31c
88	1N4184	20	82	1 0	3 0m	200	9 0	175	DO29
89	1N4184A	10	82	1.0	3 0m	200	9 0	175	DO29
90	1N4184B	5	82	1.0	3 0m	200	9 0	175	DO29
91	1N4349,A,B	xxx	82	1.0	3.0m	200	9 0	300S	DO7
92♦	1N4426	20	82	1 0	3.0m	85		175S	A266a
93	1N4426A	10	82	1 0	3 0m	85	9 0	175A	A1cm
94	1N4426B	5	82	1 0	3.0m	85	9 0	175A	A1cm
95	1N4762	10	82	1 0	3.0m	200		200A	A1ay
96	1N4762A	5	82	1.0	3.0m	200		200A	A1ay
97	1N5585	20	82	1 0 §	3.0			200A	A196d
98	1N5585A	10	82	1.0 §	3.0m	200		200A	A196d
99	1N5585B	5	82	1 0 §	3.0m	200		200A	A196d
100	1N5655		82	1.0	1.0m		10	175A	DO13
101	1N5655A		82	1.0	1.0m		10	175A	DO13
102	1R82,A,B	xxx	82	1 0	3.0m	200	9.0	175A	A52c
103#	1S253	10	82	1.0	3.0m	170		150J	A56a
104#	1S3082	xx	82	1 0	5.0m	400	9.0	150	A3
105	1Z82,A,B	xxx	82	1.0	3.0	200		150	A1ay
106	AV2082	Ø2	82	1.0	5 0m	220		150A	A19
107	CZ82,A,B,D	xxxx	82	1 0	3.0m	320	9.0	175	DO15
108	CZ82C	⧄	82	1 0	3.0m	320	9.0	175	DO15
109	EVR82,A,B	xxx	82	1.0	3 0m	235		175A	DO27
110#	EZ82A	10	82	1 0	4.9m	3.0k	9.2		A1em
111▼	HEP612-RT	5	82	1.0	3 0	200			DO41
112	HW82,A,B	xxx	82	1 0	3 0m	200		175	A196
113	JZ82,A,B,D	xxxx	82	1.0	3.0m	200	9.0	175	DO15
114	JZ82C	⧄	82	1 0	3 0m	200	9.0	175	DO15
115	LPM82,A,-20	xx*	82	1 0	3.0m	200		150A	A1kk
116	TC82A5B	5△⧄	82	1 0	5 0m	270	.05	175A	A1nj
117	TZ82,A,B,D	xxxx	82	1 0	3.0m	320	9.0	175	DO27
118	TZ82C	⧄	82	1 0	3 0m	320	9 0	175	DO27
119	VR82,A,B	xxx	82	1 0	3 0m	200		125A	A1b
120	Z82,A,B,D	xxxx	82	1.0	3 0	200	9 0	175	DO27
121	Z82C	⧄	82	1 0	3.0m	200	9 0	175	DO27
122	ZA82,A,B	xxx	82	1 0	3 1m	200		150C	A1ew
123	ZB82	†	82	1.0 §	3.1m	200		150A	A1bc
124	ZD82⧄,A,B	xxx	82	1 0	3.0m	175	9.0	175A	A1cm
125#	ZF82A	10	82	1.0	4.9m	162	9.2	150A	DO13
126	ZH82,A,B	xxx	82	1.0	3 0m	200	9.0	175A	DO1
127	ZM82,A,B,D	xxxx	82	1.0	3.0m	200	9 0	175	DO41
128	ZM82C	⧄	82	1 0	3.0m	200	9 0	175	DO41
129	1N4854,A,B	xxx	82	1.2	3.0m	200	9.8	175	DO29
130#	BZX67C82	5	82	1 3	10m	100	9.5	150J	S287
131#	ZD82#	5	82	1.3	10	100	9.5	150J	DO13
132	ZM82⧄	10	82	1 3	10	100	9.5	150J	DO13
133#	ZU82	10	82	1.3	10	100	9 5	150J	A1bg
134#	ZY82	5	82	1 3	10	100	9 5	150J	A1bg
135	1N3811,A,B	xxx	82	1 5	4 5m	130	9.8	175S	C14⧄
136	1N4487	5	82	1 5	3.0m	160		175A	A196
137	JAN1N4487	10	82	1 5	3 0m	160	9 8	175A	A1v
138#	1S4082,A	xx	82	1 5	5 0m	78	9 0	150A	DO1
139	1.5JZ82,A,B,D	xxxx	82	1 5	4 5m	130	9.8	175	DO15
140	1.5JZ82C	⧄	82	1.5	4.5m	130	9.8	175	DO15
141	1 5R82,A,B	xxx	82	1 5	4 5m	175	9.0	175A	A52c
142	1.5Z82,A,B,D	xxxx	82	1 5	4.5m	130	9 8	175	DO27
143	1 5Z82C	⧄	82	1.5	4 5m	130	9 8	175	DO27
144#	Z3B820CF	20§Ø	82	1.5	10m	125	11	175J	DO1
145	1N4074	5	82	2 0	5 0m	270	.50	100	A1nj
146	1N4074A	5	82	2 0	5 0m	270	.20	100	A1nj
147	2R82,A,B	xxx	82	2.0	6 1m	175	9 0	175A	DO27
148	2VR82,A,B	xxx	82	2 0	6.1m	175			A3e
149	LMZ82,A,-20	xx*	82	2.0	6.0m	100		150A	A1kk
150	ZBC82	†	82	2.0 §	6.2m	120		150A	A1bc
151	1N5049	10	82	2 5	7.6m	78	9.0	150	A1gn
152	1N5049A	5	82	2 5	7 6m	78	9.0	150	A1gn
153	1N5094	5	82	3.0	10m	120		175A	A146j
154	3R82,A,B	xxx	82	3 0	9.0m	100	9.0	175A	A1rw
155	3TZ82,A,B,D	xxxx	82	3 0	10m	100		175	A1ec
156	3TZ82C	⧄	82	3.0	10m	100		175	A1ec
157	3VR82,A,B	xxx	82	3 0	9 0m	100			A222
158	CZ5094	10	82	3.0	8.0m	120	720	175A	A196e
159#	FDZ82A	10	82	3.0 ⧄	15m	54	9.2	150A	S303
160	M3Z82,A	xx	82	3 0	9.1m	120		150A	A1kk
161	MZ782	5	82	3 0	10m	120	9.5	175A	A146j
162	MZ882	10	82	3.0	10m	120	9 5	175A	A146j
163	MZ982	20	82	3 0	10m	120	9.5	175A	A146j
164#	NT3C82	5	82	3	5.0m	400		125J	S43a
165	ZAC82,A,B	xxx	82	3 0	3.1m	200		150C	A1ey
166	ZCC82	†	82	3.0 §	10m	120		150A	A1ey
167	3T82,A,B	xx*	82	3.5	5.0m	175			DO4
168#	4GZ82A	10	82	4.0	30m	700	9.0		S19q
169	1N4040,A,B	xxx	82	5 0	15m	100	9 8	180A	S82
170	1N4980	5	82	5.0	15m	65		175A	A146m
171	JAN1N4980	5	82	5 0	15m	80	10	175A	A248f
172♦	1N5375	20	82	5 0	15m			200A	A1ee
173▼	1N5375A	10	82	5 0	15m	65		200A	A1ee
174▼	1N5375B	5	82	5 0	15m	65		200A	A1ee
175▼	5ZS82,A,B	xxx	82	5 0 §	15m	65		200A	A1ts
176#	5342	10Ø	82	5.0	5 0m	175		150J	A9h
177▼	CTZC82,A,B,DØ	xxxx	82	5 0 §	15m	65 Ø	9 0	175A	A1ey
178▼	CTZC82CØ	1	82	5.0 §	15m	65 Ø	9.0	175A	A1ey
179▼	CTZC82EØ	3	82	5.0 §	15m	65 Ø	9 0	175A	A1ey
180	HZ82	10	82	5 0	12m	19	7.0	165C	M221
181▼	TZC82,A,B,D	xxxx	82	5 0 §	15m	65 Ø	9 0	175A	A1ey
182▼	TZC82C	1	82	5.0 §	15m	65 Ø	9 0	175A	A1ey

SYMBOLS AND CODES EXPLAINED IN INTERPRETER

2. SILICON REFERENCE DIODES

IN ORDER OF (1) REF. VOLTAGE, (2) DISSIPATION, and (3) TYPE No.

LINE No.	3 TYPE No	TOLERANCE 20 10 5 2 ± (%)	NOM. REF. VOLT. (V)	2 MAX. DISS. @ 25°C (W)	TEST CUR. Izt (A)	MAX. DYN. IMP (Ω)	TEMP. COEFF Tc	MAX. TEMP (°C)	DWG. No
1▼	TZC82E	3	82	5 0 §	15m	65 Ø	9 0	175A	A1ey
2	ZC82	†	82	5 0 §	15m	65		150A	A1ey
3#	KR59	10	82	8 0	50m	20	9 9	150A	S186
4	UZ4782	5	82	8 0	15m	80		175A	A146m
5	UZ4882	10	82	8 0	15m	80		175A	A146m
6	1N1373,A	xx	82	10	50m	22		175A	DO4
7	1N1373B	20	82	10	50m	22			S11e
8	1N1373C,CAØ	xx	82	10 §	50m	22		175J	S19a
9	1N1835	10	82	10	50m	22	11	150A	S19a
10	1N1835A	5	82	10	50m	22	11	150A	S19a
11	1N1835C,CAØ	xx	82	10	50m	22	11	150A	S19a
12	1N1903	10	82	10	3.0m	325	8 6	200A	S82
13	1N1903A	5	82	10	3 0m	325	8.6	200A	S82
14	1N3003,A,B	xxx	82	10	30m	25		175C	DO4⊠
15	JAN1N3003B,RB	5	82	10	30m	25	9 8	150C	DO4
16	1N4284	20	82	10	30m	25	9 0	175C	S134
17	1N4284A	10	82	10	30m	25	9 0	175C	S134
18	1N4284B	5	82	10	30m	25	9 0	175C	S134
19	JAN1N4284B	5	82	10 §	30m	25	9 8	175S	S134a
20#	1S295	10	82	10	30m	20		150J	S19g
21#	1S5082,A	xx	82	10	50m	30	11	150C	DO4
22#	1S5082CØ	10	82	10	50m	30	11	150C	DO4
23#	1S6082	10	82	10	20m	60	9 0	150	DO4
24#	1S6082A	5	82	10	20m	50	9 0	150	DO4
25	10PZ82,A,B,D	xxxx	82	10	30m	25	9 0	175	DO4
26	10PZ82C	⊠	82	10	30m	25	9 0	175	DO4
27	10RZ82,A,B,D	xxxx	82	10	50m	22	11	155	DO4
28	10RZ82C	⊠	82	10	50m	22	11	155	DO4
29	AV8082	Ø2	82	10	50m	35		150A	S11
30#	GZ82A	10	82	10 ⊠	24m	33	9.2	150A	DO4
31#	PZ82A	10	82	10 ⊠	24m	33	9.2	150A	S95a
32#	Z5D820CF	20§Ø	82	10	50m	30	9 5	150J	DO4
33#	ZC5082	5	82	10	20m	50	8.9	150A	S19
34#	ZD5082	10	82	10	20m	50	8 9	150A	S19
35#	4142	10Ø	82	15	50m			150J	S19
36#	4242	10Ø	82	15	50m	20		150J	S87
37#	ZL82	10	82	25 ⊠	10	100	9.5	150J	M41
38#	ZX82	5	82	25 ⊠	10	100	9 5	150J	M41
39#	4342	10Ø	82	30	50m	20		150J	S87
40#	4442	10Ø	82	30	50m	20		150J	S87
41	1N2836,A,B§	xxx	82	50	150m	11	9 0	175S	C5a
42	JAN1N2836B,RB	5	82	50	150m	11	9.8	150C	C5a
43	1N3338	20	82	50	150m	11	9 0	175J	DO5
44	1N3338A	10	82	50	150m	11	9 0	175J	DO5
45	1N3338B	5	82	50	150m	11	9 0	175J	DO5
46	JAN1N3338B,RB	5	82	50	150m	11	9.8	150	DO5
47	50T82,A,B	xx*	82	50	150m	11	9 0		S19e
48	AV51082	5	82	50	150m	11	9 0	150C	C5a
49#	4542	10Ø	82	100	60m	18		150J	S84
50#	4642	10Ø	82	100	60m	18		150J	S84
51#	ZC782	5	82	100 §	12	400	9.2	175J	S125d⊠
52	HRE82.5	5	82 5		10m	140	.50	70A	A129
53	HRE82 5A	5	82 5		10m	140	50	125A	A129
54	1N1970	10	83	400m	200u	1 2kØ	11		A82g
55	AV15	10	83	1.0	5 0m	220		150A	A19
56	AV2083	Ø2	83	1.0	5 0m	220		150A	A19
57	AV115	10	83	10	50m	35		150A	S11
58	AV8083	Ø2	83	10	50m	35		150A	S11
59	AV51083	5	83	50	150m	11	9 0	150C	C5a
60	PS1510	5	84	25	10m	150	20	150A	A1gc
61	PS1510A	5	84	25	10m	150	10	150A	A1gc
62	AV2084	Ø2	84	1 0	5 0m	220		150A	A19
63	IDA1Z84,A,B,CØ	xxxx	84	1 0	14m			200A	A1ht
64	AV8084	Ø2	84	10	50m	35		150A	S11
65	AV51084	5	84	50	150m	11	9 0	150C	C5a
66	AV2085	Ø2	85	1 0	5 0m	220		150A	A19
67	AV8085	Ø2	85	10	50m	35		150A	S11
68	AV51085	5	85	50	150m	11	9 0	150C	C5a
69	IDAZ86,A,B,CØ	xxxx	86	500m	3 0m			200A	A1hc
70	AV2086	Ø2	86	1 0	5 0m	220		150A	A19
71	MZ1000-35	10	86	1 5 §	3 0m	300 Ø	9 8	175J	A1ay
72	AV8086	Ø2	86	10	50m	35		150A	S11
73	AV51086	5	86	50	140m	12	9 0	150C	C5a
74▼	1N1325	10	87	150m	200u		12	150A	C1
75▼	1N1325A	5	87	150m	200u		12	150A	C1
76	1N4133	5	87	25	25m	1 0k		200J	DO7
77	JAN1N4133	5	87	400m	250u	1 0k	10	175A	A1sx
78	CZA87D,10,5	xxx	87	40 ⊠	250u	1 0k	9 0	175J	M371
79	CZD87D,10,5	xxx	87	40 ⊠	250u	1 0k	9 0	175J	M451
80	MACZA87D,10,5	xxx	87	40 ⊠	250u	1.0k	9 0	175J	M453
81	MACZD87D,10,5	xxx	87	40 ⊠	250u	1 0k	9 0	175J	M453
82	MBCZA87D,10,5	xxx	87	40 ⊠	250u	1 0k	9 0	175J	M454
83	MBCZD87D,10,5	xxx	87	40 ⊠	250u	1 0k	9 0	175J	M454
84	MCCZA87D,10,5	xxx	87	40 ⊠	250u	1 0k	9 0	175J	M455
85	MCCZD87D,10,5	xxx	87	40 ⊠	250u	1 0k	9 0	175J	M455
86	MDCZA87D,10,5	xxx	87	40 ⊠	250u	1.0k	9 0	175J	M455
87	MDCZD87D,10,5	xxx	87	40 ⊠	250u	1.0k	9 0	150A	M410
88	MZC87A10	†	87	400m§	570u	1 0k	9.0	150A	M410
89	MZC87B10	§†	87	400m§	250u	1 0k	9 9	175J	M468
90	1N5269	20†	87	50	1 4m			175J	M468
91	1N5269A,B	§Ø	87	.50	1 4m	370	9 9	200A	DO7
92	MZ92-87	†	87	500m§	1.4m		9 1	150J	C103
93	S5269,A,B	xxx	87	500m	1.4m	370	9 9	175	DO41
94	AV2087	Ø2	87	1 0	5.0m	220		150A	A19
95	TC87A5B	5△⊠	87	1 0	5 0m	290	05	175A	A1nj
96	1N4075	5	87	2.0	5.0m	290	50	100	A1nj
97	1N4075A	5	87	2 0	5.0m	290	.20	100	A1nj
98♦	1N5376	20	87	5 0	15m			200A	A1ee
99▼	1N5376A	10	87	5 0	15m	75		200A	A1ee
100▼	1N5376B	5	87	5 0	15m	75		200A	A1ee
101▼	5ZS87,A,B	xxx	87	5 0 §	15m	75		200A	A1ts
102	AV8087	Ø2	87	10	50m	35		150A	S11
103	AV51087	5	87	50	140m	12	9.0	150C	C5a
104	1N237	10Ø	88	15	20m			200A	C12a
105	1N1887B	1	88	1 0	3 0m	45 △	8 6	175A	DO13
106	AV2088	Ø2	88	1.0	5.0m	220		150A	A19
107	IDA1Z88,A,B,CØ	xxxx	88	1.0	14m			200A	A1ht
108	AV8088	Ø2	88	10	50m	35		150A	S11
109	AV51088	5	88	50	140m	13	9 0	150C	C5a
110	HRE89	5	89		10m	150	.50	70A	A129
111	HRE89A	5	89		10m	150	50	125A	A129
112	AV2089	Ø2	89	1 0	5.0m	220		150A	A19
113	AV8089	Ø2	89	10	50m	35		150A	S11
114	AV51089	5	89	50	140m	14	9 0	150C	C5a
115	DSZ3090	10	90		8.0m	150	9.5		A266
116	IDAZ90,A,B,CØ	xxxx	90	500m	3 0m			200A	A1hc
117	AV2090	Ø2	90	1 0	5 0m	220		150A	A19
118	UZ8790	5	90	1 0	2.8m	250	9 5	175	A146h
119	UZ8890	10	90	1 0	2.8m	250	9.5	175	A146h
120	VR90,A,B	xx*	90	1.0	1 0m	340	10	125C	A1ex
121	2VR90,A,B	xx*	90	2 0	1.0m	340			A3e
122	1N4096	5	90	3 0	8 0m	150		200S	A146
123	3VR90,A,B	xx*	90	3 0	30m	60			A222
124	MZ790	5	90	3 0	8 0m	150	9 5	175A	A146j
125	MZ890	10	90	3.0	8.0m	150	9 5	175A	A146j
126	MZ990	20	90	3.0	8 0m	150	9 5	175A	A146j
127	UZ790	5	90	3 0	8.0m	150	9 5	175A	A146f
128	UZ890	10	90	3 0	8.0m	150	9 5	175A	A146f
129	UZ990	20	90	3 0	8 0m	150	9 5	175A	A60
130	1N5125	5	90	5.0	15m	75		175A	A146m
131	DSZ5790	5	90	5.0	15m	90	10	175A	A60r
132	DSZ5890	10	90	5 0	15m	90	10	175A	A60r
133	MZ5790	5	90	5 0	15m	75	9 5	175A	A60f
134	MZ5890	10	90	5.0	15m	75	9 5	175A	A60f
135	MZ5990	20	90	5 0	15m	75	9 5	175A	A60f
136▼	UZ5790	5	90	5.0	15m	90	10	175A	A146m
137♦	UZ5890	10	90	5 0	15m	90	10	175A	A146m
138	UZ5990	20	90	5.0	15m	75 Ø	9 5	175A	A146m
139	AV8090	Ø2	90	10	50m	35		150A	S11
140	UZ7790	5	90	10	25m	75	9 5	175	S277⊠
141	UZ7890	10	90	10	25m	75	9.5	175	S277⊠
142	UZ7990	20	90	10	25m	75	9 5	175	S277⊠
143#	1S1541	10	90	35	20m			150	TO3
144	AV51090	5	90	50	140m	15	9 0	150C	C5a
145	1N5656		90 9	1.0	1 0m		10	175A	DO13
146	1/4A91,A,B	xxx	91	25	.69m	700	9 5	175	DO7
147	1/4M91Z,10,5	xxx	91	250m	690u	700	9 3	175J	A1cy
148	25N91	20	91	25	69m	700		250	DO7
149	1N737,A	xx	91	25	1 0m	340	9 6	175A	DO7
150	1N737B	20	91	.25	1.0m	340			DO7
151	1N4134	5	91	25	25m	1 2k		200J	DO7
152	1N984,A,B	xxx	91	40	1 4m	400	9 0	175S	DO7
153	JAN1N984B	5	91	40	1.4m	400	9 9	175A	DO7
154	JAN1N4134	5	91	400m	250u	1.2k	10	175A	A1sx
155	CZA91D,10,5	xxx	91	40 ⊠	250u	1.2k	9.0	175J	M371
156	CZB91D,10,5	xxx	91	40 ⊠	690u	700	9.0	175J	M371
157	CZC91D,10,5	xxx	91	.40 ⊠	1 4m	400	9 0	175J	M371
158	CZD91D,10,5	xxx	91	.40 ⊠	250u	1 2k	9 0	175J	M451
159	CZE91D,10,5	xxx	91	.40 ⊠	1.4m	400	9 0	175J	M451
160	HM91,A,B	xxx	91	400m§	1 4m	400		175A	A196c
161	M4Z91,A,-20	xx*	91	.40	1.4m	400		150A	A1kk
162	MACZA91D,10,5	xxx	91	40 ⊠	250u	1 2k	9 0	175J	M453
163	MACZB91D,10,5	xxx	91	40 ⊠	690u	700	9 0	175J	M453
164	MACZC91D,10,5	xxx	91	40 ⊠	1 4m	400	9 0	175J	M453
165	MACZD91D,10,5	xxx	91	40 ⊠	250u	1 2k	9 0	175J	M453
166	MACZE91D,10,5	xxx	91	400m⊠	1.4m	400	9 0	175J	M453
167	MBCZA91D,10,5	xxx	91	40 ⊠	250u	1 2k	9 0	175J	M454
168	MBCZB91D,10,5	xxx	91	40 ⊠	690u	700	9 0	175J	M454
169	MBCZC91D,10,5	xxx	91	40 ⊠	1 4m	400	9.0	175J	M454
170	MBCZD91D,10,5	xxx	91	40 ⊠	250u	1 2k	9 0	175J	M454
171	MBCZE91D,10,5	xxx	91	.40 ⊠	1 4m	400	9 0	175J	M454
172	MCCZA91D,10,5	xxx	91	.40 ⊠	250u	1.2k	9.0	175J	M455
173	MCCZB91D,10,5	xxx	91	40 ⊠	690u	700	9.0	175J	M455
174	MCCZC91D,10,5	xxx	91	40 ⊠	1 4m	400	9 0	175J	M455
175	MCCZD91D,10,5	xxx	91	40 ⊠	250u	1 2k	9.0	175J	M455
176	MCCZE91D,10,5	xxx	91	40 ⊠	1 4m	400	9.0	175J	M455

SYMBOLS AND CODES EXPLAINED IN INTERPRETER

2. SILICON REFERENCE DIODES

IN ORDER OF (1) REF. VOLTAGE, (2) DISSIPATION, and (3) TYPE No.

LINE No	3 TYPE No.	TOLERANCE 1 20 10 5 2 ± (%)	NOM. REF. VOLT. (V)	2 MAX. DISS. @ 25°C (W)	TEST CUR. Izt (A)	MAX. DYN. IMP (Ω)	TEMP. COEFF Tc	MAX. TEMP (°C)	DWG. No.
1	MDCZA91D,10,5	xxx	91	40 ∅	250u	1 2k	9 0	150A	M410
2	MDCZB91D,10,5	xxx	91	40 ∅	690u	700	9 0	150A	M410
3	MDCZC91D,10,5	xxx	91	40 ∅	1 4m	400	9 0	150A	M410
4	MDCZD91D,10,5	xxx	91	40 ∅	250u	1 2k	9 0	150A	M410
5	MDCZE91D,10,5	xxx	91	40 ∅	1.4m	400	9.0	150A	M410
6	MZ500-39	10	91	4 §	1.4m	400 ∅	9 9	175J	DO7
7	MZC91A10	†	91	400m§	550u	1 1k	9.9	175J	M468
8	MZC91B10	§†	91	400m§	250u	1 2k		175J	M468
9	1/2Z91T5	5	91	50	1 4m	320		175	A94f
10	1N5270	20†	91	.50	1 4m			200A	DO7
11	1N5270A,B	§∅	91	50	1 4m	400	9 9	200A	DO7
12	MZ92-91	†	91	500m§	1 4m		9.1	150J	C103
13	S5270,A,B	xxx	91	500m	1 4m	400	10	175	DO41
14	7JZ91	†	91	750m	1 4m	400	9 0	175	DO15
15	7Z91,A,B,D	xxxx	91	750m	1 4m	400	9 0	175	DO27
16	7Z91C	∅	91	750m	1 4m	400	9 0	175	DO27
17	7ZM91,A,B,D	xxxx	91	750m	1 4m	400	9 0	175	DO41
18	7ZM91C	∅	91	750m	1 4m	400	9 0	175	DO41
19	1N3702	20	91	750m§	1 4m	400		175S	A1az
20	1N3702A	10	91	750m§	1.4m	400		175S	A1az
21	1N3702B	5	91	750m§	1 4m	400		175S	A1az
22	MMZ91,A,-20	xx*	91	75	1.4m	400		150A	A1kk
23	1A91M,A,B	xxx	91	1 0	2.8m	250		75A	DO15
24	1E91Z,10,5	xxx	91	1.0	2.8m	250	9 0	150A	A52g
25	1M91Z,10,5	xxx	91	1 0	2 8m	250	9 0	175S	DO1
26	1N1794,A	xx	91	1 0	5.0m	220		175S	DO13
27	1N3043,A,B	xxx	91	1 0	2 8m	250		175A	A31a
28	JAN1N3043B	5	91	1 0	2.8m	250	9 9	175A	A31c
29	1N4185	20	91	1 0	2 8m	250	9.0	175	DO29
30	1N4185A	10	91	1 0	2.8m	250	9 0	175	DO29
31	1N4185B	5	91	1 0	2.8m	250	9 0	175	DO29
32	1N4350,A,B	xxx	91	1 0	2 8m	250	9.0	300S	DO7
33▼	1N4427	20	91	1 0	2 8m	115		175S	A266a
34	1N4763	10	91	1 0	2.8m	250		200A	A1ay
35	1N4763A	5	91	1.0	2 8m	250		200A	A1ay
36	1N5586	20	91	1 0 §	2 8			200A	A196d
37	1N5586A	10	91	1 0 §	2 8m	250		200A	A196d
38	1N5586B	5	91	1.0 §	2.8m	250		200A	A196d
39	1N5656A		91	1.0	1 0m		10	175A	DO13
40	1R91,A,B	xxx	91	1.0	2.8m	250	9 0	175A	A52c
41#	1S254	10	91	1 0	3 0m	220		150J	A56a
42#	1S3091	xx	91	1 0	2 0m	500	10	150	A3
43	1Z91,A,B	xxx	91	1 0	2 8	250		150	A1ay
44	AV2091	∅2	91	1 0	5 0m	220		150A	A19
45	CZ91,A,B,D	xxxx	91	1 0	3 0m	400	9.0	175	DO15
46	CZ91C	∅	91	1 0	3 0m	400	9 0	175	DO15
47	EVR91,A,B	xxx	91	1.0	2 5m	275		175A	DO27
48	HW91,A,B	xxx	91	1 0	2 8m	250		175	A196
49	JZ91,A,B,D	xxxx	91	1 0	2 8m	250	9 0	175	DO15
50	JZ91C	∅	91	1 0	2.8m	250	9 0	175	DO15
51	LPM91,A,-20	xx*	91	1 0	2 8m	250		150A	A1kk
52	TC91A5B	5△∅	91	1 0	5 0m	310	05	175A	A1nj
53	TZ91,A,B,D	xxxx	91	1 0	3.0m	400	9 0	175	DO27
54	TZ91C	∅	91	1 0	3.0m	400	9 0	175	DO27
55	VR91,A,B	xxx	91	1.0	2 8m	250		125A	A1b
56	Z91,A,B,D	xxxx	91	1 0	2 8m	250	9.0	175	DO27
57	Z91C	∅	91	1 0	2 8m	250	9 0	175	DO27
58	ZA91,A,B	xxx	91	1 0	2.8m	250		150C	A1ew
59	ZB91	†	91	1 0 §	2.8m	250		150A	A1bc
60	ZD91∅,A,B	xxx	91	1 0	2.8m	225	9 0	175A	A1cm
61	ZH91,A,B	xxx	91	1 0	2.8m	250	9.0	175A	DO1
62	ZM91,A,B,D	xxxx	91	1 0	2.8m	250	9.0	175	DO41
63	ZM91C	∅	91	1 0	2 8m	250	9 0	175	DO41
64	1N4855,A,B	xxx	91	1 2	2.8m	250	9 9	175	DO29
65#	BZX67C91	5	91	1 3	5.0m	200	9.5	150J	S287
66#	ZD91#	5	91	1 3	5 0	200	9.5	150J	DO13
67#	ZY91	5	91	1.3	5 0	200	9 5	150J	A1bg
68	1N3812,A,B	xxx	91	1 5	4.1m	150	9.9	175S	C14∅
69	1N4488	5	91	1 5	2 8m	200		175A	A196
70	JAN1N4488	10	91	1 5	2.8m	200	9 9	175A	A1v
71	1S4091,A	xx	91	1 5	2 0m	86	10	150A	DO1
72	1 5JZ91,A,B,D	xxxx	91	1.5	4.1m	150	9.9	175	DO15
73	1 5JZ91C	∅	91	1 5	4 1m	150	9.9	175	DO15
74	1 5R91,A,B	xxx	91	1 5	3.8m	200	9.0	175A	A52c
75	1 5Z91,A,B,D	xxxx	91	1 5	4 1m	150	9.9	175	DO27
76	1.5Z91C	∅	91	1 5	4.1m	150	9.9	175	DO27
77	MZ1000-36	10	91	1.5 §	2 8m	375 ∅	9.9	175J	A1ay
78#	Z3B910CF	20§∅	91	1 5	10m	145	11	175J	DO1
79	1N4076	5	91	2.0	5 0m	310	50	100	A1nj
80	1N4076A	5	91	2.0	5 0m	310	20	100	A1nj
81	2R91,A,B	xxx	91	2 0	5 5m	200	9.0	175A	DO27
82	2VR91,A,B	xxx	91	2 0	5 5m	200			A3e
83	LMZ91,A,-20	xx*	91	2 0	5 0m	125		150A	A1kk
84	ZBC91	†	91	2.0 §	5 3m	155		150A	A1bc
85	1N5050	10	91	2 5	6 9m	90	9 0	150	A1gn
86	1N5050A	5	91	2 5	6 9m	90	9 0	150	A1gn
87	1N5095	5	91	3 0	8.0m	155		175A	A146j
88	3R91,A,B	xxx	91	3 0	8 4m	125	9 0	175A	A1rw
89	3TZ91,A,B,D	xxxx	91	3 0	10m	125		175	A1ec
90	3TZ91C	∅	91	3.0	10m	125		175	A1ec
91	3VR91,A,B	xxx	91	3 0	8.4m	125			A222
92	CZ5095	10	91	3.0	8.0m	155	800	175A	A196e
93	M3Z91,A	xx	91	3 0	8 2m	150		150A	A1kk
94	MZ791	5	91	3 0	8 0m	155	9 5	175A	A146j
95	MZ891	10	91	3.0	8.0m	155	9 5	175A	A146j
96	MZ991	20	91	3.0	8 0m	155	9 5	175A	A146j
97#	NT3C91	5	91	3	5.0m	400		125J	S43a
98	ZAC91,A,B	xxx	91	3 0	2 8m	250		150C	A1ey
99	ZCC91	†	91	3 0 §	8.0m	155		150A	A1ey
100	3T91,A,B	xx*	91	3 5	5.0m	220			DO4
101	1N4041,A,B	xxx	91	5.0	14m	125	9 9	180A	S82
102	1N4981	5	91	5.0	15m	75		175A	A146m
103	JAN1N4981	5	91	5 0	15m	90	10	175A	A248f
104♦	1N5377	20	91	5 0	15m			200A	A1ee
105▼	1N5377A	10	91	5 0	15m	75		200A	A1ee
106▼	1N5377B	5	91	5.0	15m	75		200A	A1ee
107▼	5ZS91,A,B	xxx	91	5 0 §	15m	75		200A	A1ts
108#	5343	10∅	91	5.0	5 0m	250		150J	A9h
109▼	CTZC91,A,B,D∅	xxxx	91	5 0 §	15m	75 ∅	9 0	175A	A1ey
110▼	CTZC91C∅	1	91	5.0 §	15m	75 ∅	9.0	175A	A1ey
111▼	CTZC91E∅	3	91	5.0 §	15m	75 ∅	9.0	175A	A1ey
112▼	TZC91,A,B,D	xxxx	91	5 0 §	15m	75 ∅	9.0	175A	A1ey
113▼	TZC91C	1	91	5 0 §	15m	75 ∅	9.0	175A	A1ey
114▼	TZC91E	3	91	5 0 §	15m	75 ∅	9 0	175A	A1ey
115	ZC91	†	91	5.0 §	15m	75		150A	A1ey
116	UZ4791	5	91	8.0	15m	90		175A	A146m
117	UZ4891	10	91	8.0	15m	90		175A	A146m
118	1N1374,A	xx	91	10	50m	35		175A	DO4
119	1N1374B	20	91	10	50m	35			S11e
120	1N1374C,CA∅	xx	91	10 §	50m	35		175J	S19a
121	1N1836	10	91	10	50m	35	11	150A	S19a
122	1N1836A	5	91	10	50m	35	11	150A	S19a
123	1N1836C,CA∅	xx	91	10	50m	35	11	150A	S19
124	1N3004,A,B	xxx	91	10	28m	35		175C	DO4∅
125	JAN1N3004B,RB	5	91	10	28m	35	9 9	150C	DO4
126	1N4285	20	91	10	28m	35	9.0	175C	S134
127	1N4285A	10	91	10	28m	35	9.0	175C	S134
128	1N4285B	5	91	10	28m	35	9.0	175C	S134
129	JAN1N4285B	5	91	10 §	28m	35	9.9	175S	S134a
130#	1S296	10	91	10	30m	20		150J	S19g
131#	1S5091,A	xx	91	10	50m	40	12	150C	DO4
132#	1S5091C∅	10	91	10	50m	40	12	150C	DO4
133#	1S6091	10	91	10	20m	60	10	150	DO4
134#	1S6091A	5	91	10	20m	60	10	150	DO4
135	10PZ91,A,B,D	xxxx	91	10	28m	35	9 0	175	DO4
136	10PZ91C	∅	91	10	28m	35	9 0	175	DO4
137	10RZ91,A,B,D	xxxx	91	10	50m	35	12	155	DO4
138	10RZ91C	∅	91	10	50m	35	12	155	DO4
139	AV8091	∅2	91	10	50m	35		150A	S11
140#	Z5D910CF	20§∅	91	10	50m	40	9.5	150J	DO4
141#	ZC5091	5	91	10	20m	60	8 9	150A	S19
142#	ZD5091	10	91	10	20m	60	8.9	150A	S19
143#	4143	10∅	91	15	40m	30		150J	S87
144#	4243	10∅	91	15	40m	30		150J	S87
145#	ZX91	5	91	25 ∅	5.0	200	9.5	150J	M41
146#	4343	10∅	91	30	40m	30		150J	S87
147#	4443	10∅	91	30	40m	30		150J	S87
148	1N2837,A,B	xxx	91	50	140m	15	9.0	175S	C5a
149	JAN1N2837B,RB	5	91	50	140m	15	9.9	150C	C5a
150	1N3339	20	91	50	140m	15	9.0	175J	DO5
151	1N3339A	10	91	50	140m	15	9 0	175J	DO5
152	1N3339B	5	91	50	140m	15	9.0	175J	DO5
153	JAN1N3339B,RB	5	91	50	140m	15	9 9	150	DO5
154	50T91,A,B	xx*	91	50	140m	15	9 0		S19e
155	AV51091	5	91	50	140m	15	9.0	150C	C5a
156#	4543	10∅	91	100	50m	30		150J	S84
157#	4643	10∅	91	100	50m	30		150J	S84
158#	ZC791	5	91	100 §	12	600	9.3	175J	S125d∅
159	AV2092	∅2	92	1.0	5.0m	330		150A	A19
160	IDA1Z92,A,B,C∅	xxxx	92	1.0	13m			200A	A1ht
161	AV8092	∅2	92	10	50m	48		150A	S11
162	AV51092	5	92	50	140m	15	9.0	150C	C5a
163	AV2093	∅2	93	1.0	5.0m	330		150A	A19
164	AV8093	∅2	93	10	50m	48		150A	S11
165	AV51093	5	93	50	140m	15	9 0	150C	C5a
166	IDAZ94,A,B,C∅	xxxx	94	500m	3.0m			200A	A1hc
167	AV2094	∅2	94	1 0	5.0m	330		150A	A19
168	AV8094	∅2	94	10	50m	48		150A	S11
169	AV51094	5	94	50	130m	17	9 0	150C	C5a
170	AV2095	∅2	95	1.0	5 0m	330		150A	A19
171	AV8095	∅2	95	10	50m	48		150A	S11
172	AV51095	5	95	50	130m	17	9 0	150C	C5a
173	HRE96	5	96		10m	160	50	70A	A129
174	HRE96A	5	96		10m	160	.50	125A	A129
175	1N1888B	1	96	1.0	3.0m	60 △	9.3	175A	DO13
176	AV2096	∅2	96	1.0	5 0m	330		150A	A19
177	IDA1Z96,A,B,C∅	xxxx	96	1 0	12m			200A	A1ht
178	AV8096	∅2	96	10	50m	48		150A	S11
179	AV51096	5	96	50	130m	18	9.0	150C	C5a
180	AV2097	∅2	97	1.0	5 0m	330		150A	A19
181	AV8097	∅2	97	10	50m	48		150A	S11
182	AV51097	5	97	50	120m	18	9.0	150C	C5a
183	IDAZ98,A,B,C∅	xxxx	98	500m	3.0m			200A	A1hc
184	AV2098	∅2	98	1 0	5 0m	330		150A	A19
185	AV8098	∅2	98	10	50m	48		150A	S11
186	AV51098	5	98	50	120m	20	9 0	150C	C5a
187	AV8099	∅2	99	10	50m	48		150A	S11
188	AV51099	5	99	50	120m	20	9.0	150C	C5a
189	DSZ3100	10	100		5.0m	175	10		A266
190	1N1998,A,B	xx1	100	15	.20m	1 7k	12	150	C1
191	1N1944,A,B	xx1	100	20	20m	1.7k	12	150A	A82e
192#	RZ10B	10	100	20	39m	43	9 3	125A	DO5
193	1/4A100,A,B	xxx	100	250m	630u	900	9.5	175	DO7

SYMBOLS AND CODES EXPLAINED IN INTERPRETER

2. SILICON REFERENCE DIODES

IN ORDER OF (1) REF. VOLTAGE, (2) DISSIPATION, and (3) TYPE No.

LINE No	3 TYPE No	TOLERANCE 1 20 10 5 2 ± (%)	NOM REF VOLT (V)	2 MAX. DISS @ 25°C (W)	TEST CUR Izt (A)	MAX. DYN IMP (Ω)	TEMP COEFF Tc	MAX. TEMP (°C)	DWG. No.
1	1/4M100Z,10,5	xxx	100	250m	630u	900	9 4	175J	A1cy
2	25N100	20	100	25	63m	900		250	DO7
3	1N738,A	xx	100	25	1 0m	400	9 6	175A	DO7
4	1N738B	20	100	25	1 0m	400			DO7
5	1N4135	5	100	25	25m	1 5k		200J	DO7
6#	MZ10B	10	100	25	1 0m	1 0k	9 3	150A	DO7
7	1N671	5	100	40	1 0m	350	9 0	200S	A31b
8	1N985,A,B	xxx	100	40	1.3m	500	9 0	175S	DO7
9	JAN1N985B	5	100	40	1 3m	500	11	175A	DO7
10	JAN1N4135	5	100	400m	250u	1 5k	10	175A	A1sx
11	CZA100D,10,5	xxx	100	400m	250u	1 3k	9 0	175	M371
12	CZB100D,10,5	xxx	100	400m	630u	900	9 0	175	M371
13	CZC100D,10,5	xxx	100	400m	1 3m	500	9 0	175	M371
14	CZD100D,10,5	xxx	100	400m	250u	1 3k	9 0	175	M451
15	CZE100D,10,5	xxx	100	400m	1 3m	500	9 0	175	M451
16	HM100,A,B	xxx	100	400m§	1 3m	500		175A	A196c
17	M4Z100,A,-20	xx*	100	400m	1 3m	500		150A	A1kk
18	MACZA100D,10,5	xxx	100	400m	250u	1 3k	9 0	175	M453
19	MACZB100D,10,5	xxx	100	400m	630u	900	9 0	175	M453
20	MACZC100D,10,5	xxx	100	400m	1 3m	500	9 0	175	M453
21	MACZD100D,10,5	xxx	100	400m	250u	1 3k	9 0	175	M453
22	MACZE100D,10,5	xxx	100	400m	1 3m	500	9 0	175	M453
23	MBCZA100D,10,5	xxx	100	400m	250u	1 3k	9 0	175	M454
24	MBCZB100D,10,5	xxx	100	400m	630u	900	9 0	175	M454
25	MBCZC100D,10,5	xxx	100	400m	1.3m	500	9 0	175	M454
26	MBCZD100D,10,5	xxx	100	400m	250u	1 3k	9 0	175	M454
27	MBCZE100D,10,5	xxx	100	400m	1.3m	500	9 0	175	M454
28	MCCZA100D,10,5	xxx	100	400m	250u	1 3k	9 0	175	M455
29	MCCZB100D,10,5	xxx	100	400m	630u	900	9.0	175	M455
30	MCCZC100D,10,5	xxx	100	400m	1 3m	500	9 0	175	M455
31	MCCZD100D,10,5	xxx	100	400m	250u	1 3k	9 0	175	M455
32	MCCZE100D,10,5	xxx	100	400m	1 3m	500	9 0	175	M455
33	MDCZA100D,10,5	xxx	100	400m	250u	1 3k	9 0	175	M410
34	MDCZB100D,10,5	xxx	100	400m	630u	900	9 0	175	M410
35	MDCZC100D,10,5	xxx	100	400m	1 3m	500	9 0	175	M410
36	MDCZD100D,10,5	xxx	100	400m	250u	1 3k	9 0	175	M410
37	MDCZE100D,10,5	xxx	100	400m	1 3m	500	9 0	175	M410
38	MZ500-40	10	100	4 §	1 3m	500 ∅	10	175J	DO7
39	MZC100A10	†	100	400m§	500u	1 4k	11	175J	M468
40	MZC100B10	§†	100	400m§	250u	1 5k		175J	M468
41	1/2Z100T5	5	100	50	1 3m	400		175	A94f
42	1N3428	10	100	50	1 0m	1 2k	8.1	200A	P5
43	1N5271	20†	100	50	1 3m			200A	DO7
44	1N5271A,B	§∅	100	50	1 3m	500	11	200A	DO7
45#	DZ10B	10	100	50	2 0m	430	9.3	150A	A100
46	IDAZ100,A,B,C∅	xxxx	100	500m	3 0m			200A	A1hc
47	MZ92-100	†	100	500m§	1 3m		9 1	150J	C103
48	S5271,A,B	xxx	100	500m	1 3m	500	11	175	DO41
49	7JZ100	†	100	750m	1 3m	500	9 0	175	DO15
50	7Z100,A,B,D	xxxx	100	750m	1.3m	500	9 0	175	DO27
51	7Z100C	∅	100	750m	1.3m	500	9 0	175	DO27
52	7ZM100,A,B,D	xxxx	100	750m	1.3m	500	9 0	175	DO41
53	7ZM100C	∅	100	750m	1 3m	500	9 0	175	DO41
54	1N3703	20	100	750m§	1 3m	500		175S	A1az
55	1N3703A	10	100	750m§	1 3m	500		175S	A1az
56	1N3703B	5	100	750m§	1 3m	500		175S	A1az
57	MMZ100,A,-20	xx*	100	750m	1 3m	500		150A	A1kk
58	1A100M,A,B	xxx	100	1 0	2 5m	350		75A	DO15
59	1E100Z,10,5	xxx	100	1 0	2 5m	350	9 0	150A	A52g
60	1M100Z,10,5	xxx	100	1 0	2 5m	350	9 0	175S	DO1
61	1N1432	5	100	1 0	2 0m	350 ∅	9 0	200A	A154
62	1N1795,A	xx	100	1 0	5 0m	260		175S	DO13
63	1N1888	10	100	1 0	3 0m	400	9 3	200C	A126
64	1N1888A	5	100	1.0	3.0m	400	9 3	200C	A126
65	1N3044,A,B	xxx	100	1 0	2.5m	350		175A	A31a
66	JAN1N3044B	5	100	1 0	2 5m	350	10	175A	A31c
67	1N4186	20	100	1 0	2 5m	350	9 0	175	DO29
68	1N4186A	10	100	1 0	2 8m	250	9 0	175	DO29
69	1N4186B	5	100	1.0	2.8m	350	9 0	175	DO29
70	1N4351,A,B	xxx	100	1 0	2 5m	350	9.0	300S	DO7
71♦	1N4428	20	100	1.0	2 5m	165		175S	A266a
72	1N4428A	10	100	1 0	2 5m	165	9 0	175A	A1cm
73	1N4428B	5	100	1 0	2 5m	165	9 0	175A	A1cm
74	1N4764	10	100	1 0	2 5m	350		200A	A1ay
75	1N4764A	5	100	1 0	2 5m	350		200A	A1ay
76	1N5587	20	100	1 0 §	2 5			200A	A196d
77	1N5587A	10	100	1 0 §	2 5m	350		200A	A196d
78	1N5587B	5	100	1 0 §	2 5m	350		200A	A196d
79	1N5657		100	1 0	1 0m		10	175A	DO13
80	1N5657A		100	1 0	1 0m		10	175A	DO13
81	1R100,A,B	xxx	100	1 0	2.5m	350	9 0	175A	A52c
82#	1S255	10	100	1.0	3.0m	260		150J	A56a
83#	1S3100	xx	100	1.0	2 0m	600	10	150	A3
84	1Z100,A,B	xxx	100	1 0	2 5	350		150	A1ay
85	AV16	10	100	1 0	5 0m	330		150A	A19
86	AV2099	2	100	1 0	5 0m	330		150A	A19
87	AV2100	∅2	100	1 0	5 0m	330		150A	A19
88	CZ100,A,B,D	xxxx	100	1 0	3.0m	500	9 0	175	DO15
89	CZ100C	∅	100	1 0	3 0m	500	9 0	175	DO15
90	EVR100,A,B	xxx	100	1 0	2.5m	400		175A	DO27
91#	EZ10B	10	100	1 0	4 0m	3.0k	9.3		A1em
92	HW100,A,B	xxx	100	1 0	2 5m	350		175	A196
93	IDA1Z100,A,B,C∅	xxxx	100	1 0	10m			200A	A1ht
94	JZ100,A,B,D	xxxx	100	1.0	2 5m	350	9.0	175	DO15
95	JZ100C	∅	100	1 0	2 5m	350	9 0	175	DO15
96	LPM100,A,-20	xx*	100	1 0	2 5m	350		150A	A1kk
97	TC100A5B	5△∅	100	1 0	5 0m	340	05	175A	A1nj
98	TZ100,A,B,D	xxxx	100	1.0	3 0m	500	9.0	175	DO27
99	TZ100C	∅	100	1 0	3 0m	500	9 0	175	DO27
100	UZ8110	5	100	1 0	2 5m	350	10	175	A146h
101	UZ8210	10	100	1 0	2 5m	350	10	175	A146h
102	VR100,A,B	xxx	100	1 0	2 5m	350		125A	A1b
103	Z100,A,B,D	xxxx	100	1 0	2 5m	350	9 0	175	DO27
104	Z100C	∅	100	1 0	2 5m	350	9 0	175	DO27
105	ZA100,A,B	xxx	100	1 0	2 5m	350		150C	A1ew
106	ZB100	†	100	1 0 §	2 5m	350		150A	A1bc
107	ZD100∅,A,B	xxx	100	1 0	2 5m	300	9 0	175A	A1cm
108#	ZF10B	10	100	1 0	4.0m	216	9 3	150A	DO13
109	ZH100,A,B	xxx	100	1 0	2 5m	350	9 0	175A	DO1
110	ZM100,A,B,D	xxxx	100	1 0	2 5m	350	9.0	175	DO41
111	ZM100C	∅	100	1 0	2 5m	350	9 0	175	DO41
112	1N4856,A,B	xxx	100	1 2	2.5m	350	10	175	DO29
113#	ZD100#	5	100	1 3	5 0	200	9 5	150J	DO13
114	ZM100∅	10	100	1 3	5 0	200	9 5	150J	DO13
115#	ZU100	10	100	1 3	5 0	200	9 5	150J	A1bg
116#	ZY100	5	100	1 3	5 0	200	9 5	150J	A1bg
117	1N3813,A,B	xxx	100	1 5	3 7m	200	10	175S	C14∅
118	1N4489	5	100	1 5	2 5m	250		175A	A196
119	JAN1N4489	10	100	1 5	2 5m	250	10	175A	A1v
120#	1S4100,A	xx	100	1 5	2 0m	96	10	150A	DO1
121	1 5JZ100,A,B,D	xxxx	100	1 5	3 7m	200	10	175	DO15
122	1 5JZ100C	∅	100	1 5	3 7m	200	10	175	DO15
123	1 5R100,A,B	xxx	100	1 5	3 7m	300	9 0	175A	A52c
124	1 5Z100,A,B,D	xxxx	100	1.5	3 7m	200	10	175	DO27
125	1 5Z100C	∅	100	1 5	3 7m	200	10	175	DO27
126	MZ1000-37	10	100	1 5 §	2 5m	525 ∅	10	175J	A1ay
127#	Z3B1000CF	20§∅	100	1 5	10m	180	11	175J	DO1
128	1N4077	5	100	2 0	5 0m	340	50	100	A1nj
129	1N4077A	5	100	2 0	5 0m	340	20	100	A1nj
130	2R100,A,B	xxx	100	2 0	5 0m	300	9 0	175A	DO27
131	2VR100,A,B	xxx	100	2 0	5 0m	300			A3e
132	LMZ100,A,-20	xx*	100	2.0	5 0m	175		150A	A1kk
133	ZBC100	†	100	2.0 §	5.0m	175		150A	A1bc
134	1N5051	10	100	2 5	6 2m	120	9.0	150	A1gn
135	1N5051A	5	100	2 5	6 2m	120	9 0	150	A1gn
136	1N4097	5	100	3 0	5 0m	175		200S	A146
137	3R100,A,B	xxx	100	3 0	7 5m	200	9 0	175A	A1rw
138	3TZ100,A,B,D	xxxx	100	3 0	10m	160		175	A1ec
139	3TZ100C	∅	100	3.0	10m	160		175	A1ec
140	3VR100,A,B	xxx	100	3 0	7 5m	200			A222
141	CZ4097	10	100	3 0	8 0m	175	920	175A	A196e
142#	FDZ10B	10	100	3 0 ∅	12m	72	9 3	150A	S303
143	M3Z100,A	xx	100	3 0	7 5m	220		150A	A1kk
144	MZ110	5	100	3 0	5 0m	175	10	175A	A146j
145	MZ210	10	100	3 0	5 0m	175	10	175A	A146j
146	MZ310	20	100	3 0	5 0m	175	10	175A	A146j
147#	NT3C100	5	100	3	5.0m	500		125J	S43a
148	UZ110	5	100	3 0	5 0m	175	10	175A	A146f
149	UZ210	10	100	3 0	5 0m	175 ∅		175A	A146f
150	UZ310	20	100	3.0	5 0m	175 ∅		175A	A60
151	ZAC100,A,B	xxx	100	3 0	2.5m	350		150C	A1ey
152	ZCC100	†	100	3 0 §	7 0m	175		150A	A1ey
153	3T100,A,B	xx*	100	3 5	5.0m	260			DO4
154#	4GZ10B	10	100	4.0	25m	900	9 0		S19q
155	1N4042,A,B	xxx	100	5 0	13m	150	10	180A	S82
156	1N4982	5	100	5 0	12m	90		175A	A146m
157	JAN1N4982	5	100	5 0	12m	110	10	175A	A248f
158♦	1N5378	20	100	5 0	12m			200A	A1ee
159▼	1N5378A	10	100	5 0	12m	90		200A	A1ee
160▼	1N5378B	5	100	5 0	12m	90		200A	A1ee
161▼	5ZS100,A,B	xxx	100	5 0 §	12m	90		200A	A1ts
162#	5344	10∅	100	5 0	5.0m	250		150J	A9h
163▼	CTZC100,A,B,D∅	xxxx	100	5 0 §	12m	90 ∅	9 0	175A	A1ey
164▼	CTZC100C∅	1	100	5.0 §	12m	90 ∅	9.0	175A	A1ey
165▼	CTZC100E∅	3	100	5.0 §	12m	90 ∅	9 0	175A	A1ey
166	DSZ5110	5	100	5 0	10m	100	10	175A	A60r
167	DSZ5210	10	100	5.0	10m	100	10	175A	A60r
168	HZ100	10	100	5 0	10m	48	8 0	165C	M221
169	MZ5110	5	100	5 0	10m	90	10	175A	A60f
170	MZ5210	10	100	5 0	10m	90	10	175A	A60f
171	MZ5310	20	100	5 0	10m	90	10	175A	A60f
172▼	TZC100,A,B,D	xxxx	100	5 0 §	12m	90 ∅	9.0	175A	A1ey
173▼	TZC100C	1	100	5 0 §	12m	90 ∅	9.0	175A	A1ey
174▼	TZC100E	3	100	5 0 §	12m	90 ∅	9 0	175A	A1ey

SYMBOLS AND CODES EXPLAINED IN INTERPRETER

2. SILICON REFERENCE DIODES

IN ORDER OF (1) REF. VOLTAGE, (2) DISSIPATION, and (3) TYPE No.

LINE No	TYPE No.	TOLERANCE 3 (20 10 5 2) ± (%)	NOM. REF. VOLT. (V)	MAX. DISS. @ 25°C (W)	TEST CUR. Izt (A)	MAX. DYN. IMP. (Ω)	TEMP. COEFF Tc	MAX. TEMP (°C)	DWG. No.
1▼	UZ5110	5	100	5 0	10m	100	10	175A	A146m
2♦	UZ5210	10	100	5.0	10m	100	10	175A	A146m
3	UZ5310	20	100	5.0	10m	90 ∅	10	175A	A146m
4	ZC100	†	100	5 0 §	12m	90		150A	A1ey
5#	KR60	10	100	8.0	50m	30	10	150A	S186
6	UZ4110	5	100	8 0	12m	100		175A	A146m
7	UZ4210	10	100	8.0	12m	100		175A	A146m
8	1N1375,A	xx	100	10	50m	40		175A	DO4
9	1N1375C,CA∅	xx	100	10 §	50m	40		175J	S19a
10	1N1423	5	100	10	20m	30 ∅	9 0	175C	S154
11	1N1904	10	100	10	3 0m	400	9 3	200A	S82
12	1N1904A	5	100	10	3 0m	400	9 3	200A	S82
13	1N2008	10	100	10	50m	40	12	150A	S19a
14	1N2008A	5	100	10	50m	40	12	150A	S19a
15	1N2008C,CA∅	xx	100	10	50m	40	12	150A	S19a
16	1N3005,A,B	xxx	100	10	25m	40		175C	DO4⊠
17	JAN1N3005B,RB	5	100	10	25m	40	10	150C	DO4
18	1N4286	20	100	10	25m	40	9.0	175C	S134
19	1N4286A	10	100	10	25m	40	9.0	175C	S134
20	1N4286B	5	100	10	25m	40	9 0	175C	S134
21	JAN1N4286B	5	100	10 §	25m	40	10	175S	S134a
22#	1S297	10	100	10	30m	30		150J	S19g
23#	1S5100,A	xx	100	10	50m	40	12	150C	DO4
24#	1S5100C∅	10	100	10	50m	40	12	150C	DO4
25#	1S6100	10	100	10	20m	60	10	150	DO4
26#	1S6100A	5	100	10	20m	60	10	150	DO4
27	10PZ100,A,B,D	xxxx	100	10	25m	40	9.0	175	DO4
28	10PZ100C	⊠	100	10	25m	40	9 0	175	DO4
29	10RZ100,A,B,D	xxxx	100	10	50m	40	12	155	DO4
30	10RZ100C	⊠	100	10	50m	40	12	155	DO4
31	AV116	10	100	10	50m	48		150A	S11
32	AV8100	∅2	100	10	50m	48		150A	S11
33#	GZ10B	10	100	10 ⊠	20m	43	9 3	150A	DO4
34#	PZ10B	10	100	10 ⊠	20m	43	9.3	150A	S95a
35	UZ7110	5	100	10	20m	90	10	175	S277⊠
36	UZ7210	10	100	10	20m	90	10	175	S277⊠
37	UZ7310	20	100	10	20m	90	10	175	S277⊠
38#	Z5D1000CF	20§∅	100	10	50m	40	10	150J	DO4
39#	ZC5099	5	100	10	20m	60	8 9	150A	S19
40#	ZD5099	10	100	10	20m	60	8 9	150A	S19
41#	4144	10∅	100	15	40m	30		150J	S87
42#	4244	10∅	100	15	40m	30		150J	S87
43#	ZL100	10	100	25 ⊠	5 0	200	9 5	150J	M41
44#	ZX100	5	100	25 ⊠	5 0	200	9 5	150J	M41
45#	4344	10∅	100	30	40m	30		150J	S87
46#	4444	10∅	100	30	40m	30		150J	S87
47	1N2838,A,B	xxx	100	50	120m	20	9.0	175S	C5a
48	JAN1N2838B,RB	5	100	50	120m	20	1 0	150C	C5a
49	1N3340	20	100	50	120m	20	9 0	175J	DO5
50	1N3340A	10	100	50	120m	20	9.0	175J	DO5
51	1N3340B	5	100	50	120m	20	9 0	175J	DO5
52	JAN1N3340B,RB	5	100	50	120m	20	10	150	DO5
53	50T100,A,B	xx*	100	50	120m	20	9 0		S19e
54	AV51100	5	100	50	120m	20	9 0	150C	C5a
55#	4544	10∅	100	100	50m	30		150J	S84
56#	4644	10∅	100	100	50m	30		150J	S84
57#	ZC799	5	100	100 §	12	900	9.4	175J	S125d⊠
58	IDAZ104,A,B,C∅	xxxx	104	500m	1 0m			200A	A1hc
59	IDA1Z104,A,B,C∅	xxxx	104	1 0	10m			200A	A1ht
60	1N238	10∅	105	15	20m			200A	C12a
61▼	1N1326	10	105	150m	200u		12	150A	C1
62▼	1N1326A	5	105	150m	200u		12	150A	C1
63	1/4A105,A,B	xxx	105	250m	600u	1 0k	9.5	175	DO7
64	1/4M105Z,10,5	xxx	105	250m	600u	1.0k	9 5	175J	A1cy
65	25N105	20	105	.25	60m	1 0k		250	DO7
66	CZA105D,10,5	xxx	105	400m	250u	1 4k	9 5	175	M371
67	CZB105D,10,5	xxx	105	400m	600u	1.0k	9 5	175	M371
68	CZC105D,10,5	xxx	105	400m	1 3m	650	9 5	175	M371
69	CZD105D,10,5	xxx	105	400m	250u	1 4k	9 5	175	M451
70	CZE105D,10,5	xxx	105	400m	1.3m	650	9 5	175	M451
71	MACZA105D,10,5	xxx	105	400m	250u	1 4k	9 5	175	M453
72	MACZB105D,10,5	xxx	105	400m	600u	1.0k	9 5	175	M453
73	MACZC105D,10,5	xxx	105	400m	1 3m	650	9 5	175	M453
74	MACZD105D,10,5	xxx	105	400m	250u	1 4k	9 5	175	M453
75	MACZE105D,10,5	xxx	105	400m	1.3m	650	9 5	175	M453
76	MBCZA105D,10,5	xxx	105	400m	250u	1 4k	9 5	175	M454
77	MBCZB105D,10,5	xxx	105	400m	600u	1 0k	9 5	175	M454
78	MBCZC105D,10,5	xxx	105	400m	1 3m	650	9 5	175	M454
79	MBCZD105D,10,5	xxx	105	400m	250u	1 4k	9 5	175	M454
80	MBCZE105D,10,5	xxx	105	400m	1 3m	650	9 5	175	M454
81	MCCZA105D,10,5	xxx	105	400m	250u	1 4k	9 5	175	M455
82	MCCZB105D,10,5	xxx	105	400m	600u	1 0k	9 5	175	M455
83	MCCZC105D,10,5	xxx	105	400m	1.3m	650	9 5	175	M455
84	MCCZD105D,10,5	xxx	105	400m	250u	1 4k	9 5	175	M455
85	MCCZE105D,10,5	xxx	105	400m	1.3m	650	9 5	175	M455
86	MDCZA105D,10,5	xxx	105	400m	250u	1 4k	9.5	175	M410
87	MDCZB105D,10,5	xxx	105	400m	600u	1 0k	9 5	175	M410
88	MDCZC105D,10,5	xxx	105	400m	1.3m	650	9.5	175	M410
89	MDCZD105D,10,5	xxx	105	400m	250u	1 4k	9 5	175	M410
90	MDCZE105D,10,5	xxx	105	400m	1.3m	650	9.5	175	M410
91	PS6326	15	105	.50		.20		200A	DO14
92	7JZ105	†	105	750m	1.2m	650	9 5	175	DO15
93	7Z105,A,B,D	xxxx	105	750m	1.2m	650	9.5	175	DO27
94	7Z105C	⊠	105	750m	1.2m	650	9.5	175	DO27
95	.7ZM105,A,B,D	xxxx	105	750m	1.2m	650	9 5	175	DO41
96	.7ZM105C	⊠	105	750m	1.2m	650	9.5	175	DO41
97#	1S256	10	105	1.0	3.0m	290		150J	A56a
98	AV2105	∅2	105	1.0	5 0m	330		150A	A19
99	CZ105,A,B,D	xxxx	105	1.0	3.0m	550	9.5	175	DO15
100	CZ105C	⊠	105	1.0	3 0m	550	9.5	175	DO15
101	JZ105,A,B,D	xxxx	105	1.0	2 5m	400	9 5	175	DO15
102	JZ105C	⊠	105	1.0	2 5m	400	9 5	175	DO15
103	TC105A5B	5△⊠	105	1.0	2 5m	700	05	175A	A1nj
104	TZ105,A,B,D	xxxx	105	1.0	3 0m	550	9.5	175	DO27
105	TZ105C	⊠	105	1.0	3 0m	550	9.5	175	DO27
106	VR105,A,B	xx*	105	1 0	1.0m	400	10	125C	A1ex
107	Z105,A,B,D	xxxx	105	1.0	2 5m	400	9 5	175	DO27
108	Z105C	⊠	105	1.0	2.5m	400	9.5	175	DO27
109	ZM105,A,B,D	xxxx	105	1 0	2.5m	400	9 5	175	DO41
110	ZM105C	⊠	105	1.0	2 5m	400	9.5	175	DO41
111	1.5JZ105,A,B,D	xxxx	105	1 5	3.4m	300	10	175	DO15
112	1 5JZ105C	⊠	105	1 5	3 4m	300	10	175	DO15
113	1 5Z105,A,B,D	xxxx	105	1 5	3 4m	300	10	175	DO27
114	1.5Z105C	⊠	105	1 5	3.4m	300	10	175	DO27
115	1N4078	5	105	2 0	2.5m	700	50	100	A1nj
116	1N4078A	5	105	2 0	2.5m	700	.20	100	A1nj
117	2VR105,A,B	xx*	105	2.0	1 0m	400			A3e
118	ZBC105	†	105	2 0 §	4.8m	200		150A	A1bc
119	3TZ105,A,B,D	xxxx	105	3 0	10m	200		175	A1ec
120	3TZ105C	⊠	105	3 0	10m	200		175	A1ec
121	ZCC105	†	105	3 0 §	6.0m	200		150A	A1ey
122▼	CTZC105,A,B,D∅	xxxx	105	5 0 §	12m	100 ∅	9.5	175A	A1ey
123▼	CTZC105C∅	1	105	5.0 §	12m	100 ∅	9.5	175A	A1ey
124▼	CTZC105E∅	3	105	5.0 §	12m	100 ∅	9.5	175A	A1ey
125▼	TZC105,A,B,D	xxxx	105	5 0 §	12m	100 ∅	9.5	175A	A1ey
126▼	TZC105C	1	105	5 0 §	12m	100 ∅	9.5	175A	A1ey
127▼	TZC105E	3	105	5.0 §	12m	100 ∅	9.5	175A	A1ey
128	ZC105	†	105	5.0 §	12m	100		150A	A1ey
129	1N3006,A,B	xxx	105	10	25m	45	9 5	175S	DO4
130#	1S298	10	105	10	30m	30		150J	S19g
131	AV8105	∅2	105	10	50m	48		150A	S11
132	1N2839,A,B	xxx	105	50	120m	25	9.5	175S	C5a
133	1N3341	20	105	50	120m	25	9 5	175J	DO5
134	1N3341A	10	105	50	120m	25	9.5	175J	DO5
135	1N3341B	5	105	50	120m	25	9 5	175J	DO5
136	AV51105	5	105	50	120m	25	9 5	150C	C5a
137	IDAZ108,A,B,C∅	xxxx	108	500m	1 0m			200A	A1hc
138	IDA1Z108,A,B,C∅	xxxx	108	1.0	10m			200A	A1ht
139#	1S1542	10	108	35	20m			150	TO3
140	1/4A110,A,B	xxx	110	250m	570u	1.2k	9 5	175J	A1cy
141	1/4M110Z,10,5	xxx	110	250m	570u	1.2k	9.5	175J	A1cy
142	25N110	20	110	25	.57m	1 2k		250	DO7
143	1N739,A	xx	110	25	1.0m	490	9 6	175A	DO7
144	1N739B	20	110	25	1 0m	490			DO7
145	1N986,A,B	xxx	110	40	1.1m	750	9 5	175S	DO7
146	JAN1N986B	5	110	40	1 1m	750	11	175A	DO7
147	CZA110D,10,5	xxx	110	400m	250u	1.5k	9 5	175	M371
148	CZB110D,10,5	xxx	110	400m	570u	1.2k	9.5	175	M371
149	CZC110D,10,5	xxx	110	400m	1.1m	750	9.5	175	M371
150	CZD110D,10,5	xxx	110	400m	250u	1 5k	9 5	175	M451
151	CZE110D,10,5	xxx	110	400m	1.1m	750	9 5	175	M451
152	HM110,A,B	xxx	110	400m§	1 1m	750		175A	A196c
153	M4Z110,A,-20	xx*	110	400m	1 1m	750		150A	A1kk
154	MACZA110D,10,5	xxx	110	400m	250u	1 5k	9 5	175	M453
155	MACZB110D,10,5	xxx	110	400m	570u	1.2k	9.5	175	M453
156	MACZC110D,10,5	xxx	110	400m	1 1m	750	9 5	175	M453
157	MACZD110D,10,5	xxx	110	400m	250u	1.5k	9 5	175	M453
158	MACZE110D,10,5	xxx	110	400m	1 1m	750	9 5	175	M453

SYMBOLS AND CODES EXPLAINED IN INTERPRETER

2. SILICON REFERENCE DIODES

IN ORDER OF (1) REF. VOLTAGE, (2) DISSIPATION, and (3) TYPE No.

LINE No.	3 TYPE No.	TOLERANCE 20 10 5 2 ± (%)	NOM. REF. VOLT (V)	2 MAX. DISS. @ 25°C (W)	TEST CUR. Izt (A)	MAX. DYN. IMP. (Ω)	TEMP. COEFF Tc	MAX. TEMP (°C)	DWG. No.
1	MBCZA110D,10,5	xxx	110	400m	250u	1 5k	9 5	175	M454
2	MBCZB110D,10,5	xxx	110	400m	570u	1 2k	9 5	175	M454
3	MBCZC110D,10,5	xxx	110	400m	1 1m	750	9 5	175	M454
4	MBCZD110D,10,5	xxx	110	400m	250u	1 5k	9 5	175	M454
5	MBCZE110D,10,5	xxx	110	400m	1 1m	750	9 5	175	M454
6	MCCZA110D,10,5	xxx	110	400m	250u	1 5k	9.5	175	M455
7	MCCZB110D,10,5	xxx	110	400m	570u	1 2k	9 5	175	M455
8	MCCZC110D,10,5	xxx	110	400m	1 1m	750	9 5	175	M455
9	MCCZD110D,10,5	xxx	110	400m	250u	1 5k	9 5	175	M455
10	MCCZE110D,10,5	xxx	110	400m	1 1m	750	9 5	175	M455
11	MDCZA110D,10,5	xxx	110	400m	250u	1 5k	9 5	175	M410
12	MDCZB110D,10,5	xxx	110	400m	570u	1 2k	9 5	175	M410
13	MDCZC110D,10,5	xxx	110	400m	1 1m	750	9 5	175	M410
14	MDCZD110D,10,5	xxx	110	400m	250u	1 5k	9.5	175	M410
15	MDCZE110D,10,5	xxx	110	400m	1 1m	750	9.5	175	M410
16	MZC110A10	†	110	400m§	450u	1.7k	11	175J	M468
17	MZC110B10	§†	110	400m§	250u	3 0k		175J	M468
18	1N5272	20†	110	.50	1 1m			200A	DO7
19	1N5272A,B	§∅	110	50	1 1m	750	11	200A	DO7
20	MZ92-110	†	110	500m§	1 1m		9 1	150J	C103
21	S5272,A,B	xxx	110	500m	1 1m	750	11	175	DO41
22	7JZ110	†	110	750m	1 1m	750	9 5	175	DO15
23	7Z110,A,B,D	xxxx	110	750m	1 1m	750	9 5	175	DO27
24	.7Z110C	∅	110	750m	1 1m	750	9 5	175	DO27
25	.7ZM110,A,B,D	xxxx	110	750m	1 1m	750	9 5	175	DO41
26	.7ZM110C	∅	110	750m	1 1m	750	9 5	175	DO41
27	1N3704	20	110	750m§	1 1m	750		175S	A1az
28	1N3704A	10	110	750m§	1 1m	750		175S	A1az
29	1N3704B	5	110	750m§	1 1m	750		175S	A1az
30	MMZ110,A,-20	xx*	110	750m	1 1m	750		150A	A1kk
31	1A110M,A,B	xxx	110	1 0	2 3m	450		75A	DO15
32	1E110Z,10,5	xxx	110	1 0	2 3m	450	9 5	150A	A52g
33	1M110Z,10,5	xxx	110	1 0	2 3m	450	9 5	175S	DO1
34	1N1796,A	xx	110	1.0	5 0m	320		175S	DO13
35	1N3045,A,B	xxx	110	1.0	2 3m	450		175A	A31a
36	JAN1N3045B	5	110	1 0	2 3m	450	10	175A	A31c
37	1N4187	20	110	1 0	2 3m	450	9 5	175	DO29
38	1N4187A	10	110	1 0	2 3m	450	9 5	175	DO29
39	1N4187B	5	110	1 0	2 3m	450	9 5	175	DO29
40	1N4352,A,B	xxx	110	1 0	2 3m	450	9 5	300S	DO7
41♦	1N4429	20	110	1 0	2 3m	250		175S	A266a
42	1N4429A	10	110	1 0	2 3m	250	9 5	175A	A1cm
43	1N4429B	5	110	1 0	2 3m	250	9 5	175A	A1cm
44	1N5588	20	110	1 0 §	2 3			200A	A196d
45	1N5588A	10	110	1 0 §	2 3m	450		200A	A196d
46	1N5588B	5	110	1 0 §	2 3m	450		200A	A196d
47	1N5658		110	1 0	1 0m		10	175A	DO13
48	1N5658A		110	1 0	1 0m		10	175A	DO13
49	1R110,A,B	xxx	110	1 0	2 3m	450	9 5	175A	A52c
50#	1S257	10	110	1 0	3 0m	320		150J	A56a
51#	1S3110	xx	110	1 0	2 0m	600	10	150	A3
52	AV2110	∅2	110	1 0	5 0m	330		150A	A19
53	CZ110,A,B,D	xxxx	110	1 0	3 0m	600	9 5	175	DO15
54	CZ110C	∅	110	1 0	3 0m	600	9 5	175	DO15
55	EVR110,A,B	xxx	110	1.0	2 5m	450		175A	DO27
56▼	HEP613-RT	5	110	1.0	2.3	450			DO41
57	HW110,A,B	xxx	110	1 0	2 3m	450		175	A196
58	JZ110,A,B,D	xxxx	110	1 0	2 3m	450	9 5	175	DO15
59	JZ110C	∅	110	1 0	2 3m	450	9 5	175	DO15
60	LPM110,A,-20	xx*	110	1 0	2 3m	450		150A	A1kk
61	TC110A5B	5△∅	110	1 0	2 5m	740	05	175A	A1nj
62	TZ110,A,B,D	xxxx	110	1 0	3 0m	600	9 5	175	DO27
63	TZ110C	∅	110	1.0	3.0m	600	9 5	175	DO27
64	UZ8111	5	110	1.0	2 3m	450	10	175	A146h
65	UZ8211	10	110	1 0	2 3m	450	10	175	A146h
66	VR110,A,B	xxx	110	1 0	2 3m	450		125A	A1b
67	Z110,A,B,D	xxxx	110	1 0	2 3m	450	9.5	175	DO27
68	Z110C	∅	110	1 0	2 3m	450	9.5	175	DO27
69	ZA110,A,B	xxx	110	1 0	2 3m	450		150C	A1ew
70	ZB110	†	110	1.0 §	2 3m	450		150A	A1bc
71	ZD110∅,A,B	xxx	110	1 0	2 3m	400	9.5	175A	A1cm
72	ZH110,A,B	xxx	110	1.0	2 3m	450	9.5	175A	DO1
73	ZM110,A,B,D	xxxx	110	1 0	2 3m	450	9 5	175	DO41
74	ZM110C	∅	110	1 0	2 3m	450	9 5	175	DO41
75	1N4857,A,B	xxx	110	1 2	2 3m	450	10	175	DO29
76#	ZD110#	5	110	1 3	5 0	250	10	150J	DO13
77#	ZY110	5	110	•1.3	5 0	250	10	150J	A1bg
78	1N3814,A,B	xxx	110	1.5	3 4m	300	10	175S	C14∅
79	1N4490	5	110	1 5	2 3m	300		175A	A196
80	JAN1N4490	10	110	1.5	2 3m	300	10	175A	A1v
81#	1S4110,A	xx	110	1.5	2 0m	107	10	150A	DO1
82	1.5JZ110,A,B,D	xxxx	110	1 5	3 4m	300	10	175	DO15
83	1 5JZ110C	∅	110	1.5	3 4m	300	10	175	DO15
84	1.5R110,A,B	xxx	110	1.5	3.5m	400	9 5	175A	A52c
85	1 5Z110,A,B,D	xxxx	110	1.5	3 4m	300	10	175	DO27
86	1 5Z110C	∅	110	1 5	3.4m	300	10	175	DO27
87	1N4079	5	110	2.0	2.5m	740	.50	100	A1nj
88	1N4079A	5	110	2 0	2.5m	740	20	100	A1nj
89	2R110,A,B	xxx	110	2 0	4 5m	400	9.5	175A	DO27
90	2VR110,A,B	xxx	110	2 0	4 5m	400			A3e
91	LMZ110,A,-20	xx*	110	2 0	4 5m	250		150A	A1kk
92	ZBC110	†	110	2.0 §	4.6m	250		150A	A1bc
93	1N5096	5	110	3 0	5.0m	250		175A	A146j
94	3R110,A,B	xxx	110	3.0	6 9m	225	9 5	175A	A1rw
95	3TZ110,A,B,D	xxxx	110	3 0	10m	225		175	A1ec
96	3TZ110C	∅	110	3 0	10m	225		175	A1ec
97	3VR110,A,B	xxx	110	3.0	6 9m	225			A222
98	CZ5096	10	110	3 0	5.0m	250	100	175A	A196e
99	M3Z110,A	xx	110	3.0	6.8m	270		150A	A1kk
100	MZ111	5	110	3 0	5.0m	250	10	175A	A146j
101	MZ211	10	110	3 0	5 0m	250	10	175A	A146j
102	MZ311	20	110	3 0	5 0m	250	10	175A	A146j
103	UZ111	5	110	3 0	5.0m	250	10	175A	A146f
104	UZ211	10	110	3 0	5.0m	275 ∅		175A	A146f
105	UZ311	20	110	3 0	5 0m	275 ∅		175A	A60
106	ZAC110,A,B	xxx	110	3.0	2.3m	450		150C	A1ey
107	ZCC110	†	110	3.0 §	5 0m	250		150A	A1ey
108	3T110,A,B	xx*	110	3.5	5 0m	320			S11
109	1N4983	5	110	5 0	12m	125		175A	A146m
110	JAN1N4983	5	110	5 0	12m	125	10	175A	A248f
111♦	1N5379	20	110	5 0	12m			200A	A1ee
112▼	1N5379A	10	110	5 0	12m	125		200A	A1ee
113▼	1N5379B	5	110	5.0	12m	125		200A	A1ee
114#	5345	10∅	110	5.0	5 0m	320		150J	A9h
115▼	CTZC110,A,B,D∅	xxxx	110	5.0 §	12m	125 ∅	9.5	175A	A1ey
116▼	CTZC110C∅	1	110	5 0 §	12m	125 ∅	9.5	175A	A1ey
117▼	CTZC110E∅	3	110	5 0 §	12m	125 ∅	9 5	175A	A1ey
118	MZ5111	5	110	5 0	10m	125	10	175A	A60f
119	MZ5211	10	110	5 0	10m	125	10	175A	A60f
120	MZ5311	20	110	5.0	10m	125	10	175A	A60f
121▼	TZC110,A,B,D	xxxx	110	5 0 §	12m	125 ∅	9 5	175A	A1ey
122▼	TZC110C	1	110	5.0 §	12m	125 ∅	9.5	175A	A1ey
123▼	TZC110E	3	110	5.0 §	12m	125 ∅	9 5	175A	A1ey
124▼	UZ5111	5	110	5.0	10m	125	10	175A	A146m
125♦	UZ5211	10	110	5.0	10m	125	10	175A	A146m
126	UZ5311	20	110	5 0	10m	125 ∅	10	175A	A146m
127	ZC110	†	110	5 0 §	12m	125		150A	A1ey
128	UZ4111	5	110	8 0	12m	125		175A	A146m
129	UZ4211	10	110	8 0	12m	125		175A	A146m
130	1N1809,A	xx	110	10	50m	47		175A	S11
131	1N1809B	20	110	10	50m	47			S11e
132	1N1809C,CA∅	xx	110	10 §	50m	47		175J	S19a
133	1N2009	10	110	10	50m	47	12	150A	S19a
134	1N2009A	5	110	10	50m	47	12	150A	S19a
135	1N2009C,CA∅	xx	110	10	50m	47	12	150A	S19a
136	1N3007,A,B	xxx	110	10	23m	55		175C	DO4∅
137	JAN1N3007B,RB	5	110	10	23m	55	10	150C	DO4
138	1N4287	20	110	10	23m	55	9 5	175C	S134
139	1N4287A	10	110	10	23m	55	9 5	175C	S134
140	1N4287B	5	110	10	23m	55	9 5	175C	S134
141	JAN1N4287B	5	110	10 §	23m	55	10	175S	S134a
142#	1S299	10	110	10	30m	40		150J	S19g
143#	1S5110,A	xx	110	10	50m	40	12	150C	DO4
144#	1S5110C∅	10	110	10	50m	40	12	150C	DO4
145#	1S6110	10	110	10	20m	80	10	150	DO4
146#	1S6110A	5	110	10	20m	60	10	150	DO4
147	10PZ110,A,B,D	xxxx	110	10	23m	55	9 5	175	DO4
148	10PZ110C	∅	110	10	23m	55	9 5	175	DO4
149	10RZ110,A,B,D	xxxx	110	10	30m	80	12	155	DO4
150	10RZ110C	∅	110	10	30m	80	12	155	DO4
151	AV8110	∅2	110	10	50m	48		150A	S11
152#	4145△	10∅	110	15	35m	45		150J	S87
153#	4245	10∅	110	15	35m	45		150J	S87
154#	ZX110	5	110	25 ∅	5 0	250	10	150J	M41
155#	4345	10∅	110	30	35m	45		150J	S87
156#	4445	10∅	110	30	35m	45		150J	S87
157	1N2840,A,B	xxx	110	50	110m	30	9 5	175S	C5a
158	JAN1N2840B,RB	5	110	50	110	30	1 0	150C	C5a
159	1N3342	20	110	50	110m	30	9.5	175J	DO5
160	1N3342A	10	110	50	110m	30	9 5	175J	DO5
161	1N3342B	5	110	50	110m	30	9 5	175J	DO5
162	JAN1N3342B,RB	5	110	50	110m	30	10	150	DO5
163	50T110,A,B	xx*	110	50	110m	30	9.5		S19e
164	AV51110	5	110	50	110m	30	9 5	150C	C5a
165	IDAZ112,A,B,C∅	xxxx	112	500m	1 0m			200A	A1hc
166	IDA1Z112,A,B,C∅	xxxx	112	1 0	9 0m			200A	A1ht
167	AV2115	∅2	115	1 0	5 0m	500		150A	A19
168	AV8115	∅2	115	10	50m	70		150A	S11
169	AV51115	5	115	50	105m	35	9 5	150C	C5a
170	IDAZ116,A,B,C∅	xxxx	116	500m	1 0m			200A	A1hc
171	IDA1Z116,A,B,C∅	xxxx	116	1 0	9 0m			200A	A1ht
172	1N1999	10	120	150m	200u	2 8k		150	C1
173	1N1999A	5	120	150m	200u	2 8k		150	C1
174	1N1999B	1	120	150m	200u	2 8k		150	C1
175	1N1945,A,B	xx1	120	20	20m	2 8k		150	DO7
176#	RZ12B	10	120	20	33m	56	9 4	125A	DO5

SYMBOLS AND CODES EXPLAINED IN INTERPRETER

2. SILICON REFERENCE DIODES

IN ORDER OF (1) REF. VOLTAGE, (2) DISSIPATION, and (3) TYPE No.

LINE No	3 TYPE No	TOLERANCE 1 20 10 5 2 ± (%)	NOM. REF VOLT. (V)	2 MAX DISS @ 25°C (W)	TEST CUR Izt (A)	MAX. DYN IMP. (Ω)	TEMP COEFF Tc	MAX. TEMP (°C)	DWG. No.
1	1/4A120,A,B								
		xxx	120	250m	520u	1 5k	9 5	175	DO7
2	1/4M120Z,10,5								
		xxx	120	250m	520u	1 5k	9 6	175J	A1cy
3	25N120	20	120	25	52m	1 5k		250	DO7
4	1N740,A	xx	120	25	1 0m	570	9 6	175A	DO7
5	1N740B	20	120	25	1 0m	570			DO7
6#	MZ12B	10	120	25	82m	1 6k	9 4	150A	DO7
7	1N987,A,B	xxx	120	40	1 0m	900	9 5	175S	DO7
8	JAN1N987B	5	120	40	1 0m	900	11	175A	DO7
9	CZA120D,10,5								
		xxx	120	400m	250u	1 7k	9 5	175	M371
10	CZB120D,10,5								
		xxx	120	400m	520u	1 5k	9 5	175	M371
11	CZC120D,10,5								
		xxx	120	400m	1 0m	900	9 5	175	M371
12	CZD120D,10,5								
		xxx	120	400m	250u	1 7k	9 5	175	M451
13	CZE120D,10,5								
		xxx	120	400m	1 0m	900	9 5	175	M451
14	HM120,A,B	xxx	120	400m§	1 0m	900		175A	A196c
15	M4Z120,A,-20								
		xx*	120	400m	1 0m	900		150A	A1kk
16	MACZA120D,10,5								
		xxx	120	400m	250u	1 7k	9 5	175	M453
17	MACZB120D,10,5								
		xxx	120	400m	520u	1 5k	9 5	175	M453
18	MACZC120D,10,5								
		xxx	120	400m	1 0m	900	9 5	175	M453
19	MACZD120D,10,5								
		xxx	120	400m	250u	1 7k	9 5	175	M453
20	MACZE120D,10,5								
		xxx	120	400m	1 0m	900	9.5	175	M453
21	MBCZA120D,10,5								
		xxx	120	400m	250u	1 7k	9 5	175	M454
22	MBCZB120D,10,5								
		xxx	120	400m	520u	1 5k	9 5	175	M454
23	MBCZC120D,10,5								
		xxx	120	400m	1 0m	900	9 5	175	M454
24	MBCZD120D,10,5								
		xxx	120	400m	250u	1 7k	9 5	175	M454
25	MBCZE120D,10,5								
		xxx	120	400m	1 0m	900	9 5	175	M454
26	MCCZA120D,10,5								
		xxx	120	400m	250u	1 7k	9 5	175	M455
27	MCCZB120D,10,5								
		xxx	120	400m	520u	1 5k	9 5	175	M455
28	MCCZC120D,10,5								
		xxx	120	400m	1 0m	900	9 5	175	M455
29	MCCZD120D,10,5								
		xxx	120	400m	250u	1 7k	9 5	175	M455
30	MCCZE120D,10,5								
		xxx	120	400m	1 0m	900	9 5	175	M455
31	MDCZA120D,10,5								
		xxx	120	400m	250u	1 7k	9 5	175	M410
32	MDCZB120D,10,5								
		xxx	120	400m	520u	1 5k	9 5	175	M410
33	MDCZC120D,10,5								
		xxx	120	400m	1 0m	900	9 5	175	M410
34	MDCZD120D,10,5								
		xxx	120	400m	250u	1 7k	9 5	175	M410
35	MDCZE120D,10,5								
		xxx	120	400m	1 0m	900	9 5	175	M410
36	MZC120A10	†	120	400m§	420u	2 0k	11	175J	M468
37	MZC120B10	§†	120	400m§	250u	4 0k		175J	M468
38	1N3429	10	120	50	1 0m	1 4k	8 3	200A	P5
39	1N5273	20†	120	50	1 0m			200A	DO7
40	1N5273A,B	§∅	120	50	1 0m	900	11	200A	DO7
41#	DZ12B	10	120	50	1 6m	560	9 4	150A	A100
42	IDAZ120,A,B,C∅								
		xxxx	120	500m	1 0m			200A	A1hc
43	MZ92-120	†	120	500m§	1 0m		9 2	150J	C103
44	S5273,A,B	xxx	120	500m	1 0m	900	11	175	DO41
45	7JZ120	†	120	750m	1 0m	900	9 5	175	DO15
46	7Z120,A,B,D								
		xxxx	120	750m	1 0m	900	9.5	175	DO27
47	7Z120C	∅	120	750m	1 0m	900	9 5	175	DO27
48	7ZM120,A,B,D								
		xxxx	120	750m	10m	900	9 5	175	DO41
49	7ZM120C	∅	120	750m	10m	900	9 5	175	DO41
50	1N3705	20	120	750m§	1.0m	900		175S	A1az
51	1N3705A	10	120	750m§	1 0m	900		175S	A1az
52	1N3705B	5	120	750m§	1.0m	900		175S	A1az
53	MMZ120,A,-20								
		xx*	120	750m	1 0m	900		150A	A1kk
54	1A120M,A,B	xxx	120	1 0	2 0m	550		75A	DO15
55	1E120Z,10,5								
		xxx	120	1 0	2 0m	550	9.5	150A	A52g
56	1M120Z,10,5								
		xxx	120	1 0	2 0m	550	9 5	175S	DO1
57	1N1797,A	xx	120	1 0	5 0m	390		175S	DO13
58	1N3046,A,B	xxx	120	1 0	2 0m	550		175A	A31a
59	JAN1N3046B	5	120	1 0	2 0m	550	10	175A	A31c
60	1N3098,A	xx	120	1 0	3 0m	600	9 5	200C	A126
61	1N4188	20	120	1 0	2 0m	550	9 5	175	DO29
62	1N4188A	10	120	1 0	2 0m	550	9 5	175	DO29
63	1N4188B	5	120	1 0	2 0m	550	9 5	175	DO29
64	1N4353,A,B	xxx	120	1 0	2 0m	550	9 5	300S	DO7
65♦	1N4430	20	120	1 0	2 0m	350		175S	A266a
66	1N4430A	10	120	1 0	2 0m	350	9 5	175A	A1cm
67	1N4430B	5	120	1 0	2 0m	350	9 5	175A	A1cm
68	1N5589	20	120	1 0 §	2 0			200A	A196d
69	1N5589A	10	120	1 0 §	2 0m	550		200A	A196d
70	1N5589B	5	120	1 0 §	2 0m	550		200A	A196d
71	1N5659		120	1 0	1 0m		10	175A	DO13
72	1N5659A		120	1 0	1 0m		10	175A	DO13
73	1R120,A,B	xxx	120	1 0	2 0m	550	9 5	175A	A52c
74#	1S258	10	120	1 0	3 0m	400		150J	A56a
75#	1S3120	xx	120	1 0	2 0m	700	10	150	A3
76	AV2120	∅2	120	1 0	5 0m	500		150A	A19
77	CZ120,A,B,D								
		xxxx	120	1 0	3 0m	650	9 5	175	DO15
78	CZ120C	∅	120	1 0	3 0m	650	9 5	175	DO15
79#	EZ12B	10	120	1 0	3 3m	4 5k	9 4		A1em
80	HW120,A,B	xxx	120	1 0	2.0m	550		175	A196
81	IDA1Z120,A,B,C∅								
		xxxx	120	1 0	9 0m			200A	A1ht
82	JZ120,A,B,D								
		xxxx	120	1 0	2 0m	550	9.5	175	DO15
83	JZ120C	∅	120	1 0	2 0m	550	9 5	175	DO15
84	LPM120,A,-20								
		xx*	120	1 0	2.0m	550		150A	A1kk
85	TC120A5B	5△∅	120	1 0	2 5m	800	05	175A	A1nj
86	TZ120,A,B,D								
		xxxx	120	1 0	3.0m	650	9 5	175	DO27
87	TZ120C	∅	120	1 0	3.0m	650	9 5	175	DO27
88	UZ8112	5	120	1.0	2.0m	550	10	175	A146h
89	UZ8212	10	120	1 0	2.0m	550	10	175	A146h
90	VR120,A,B	xxx	120	1 0	2.0m	550		125A	A1b
91	Z120,A,B,D	xxxx	120	1.0	2 0m	550	9 5	175	DO27
92	Z120C	∅	120	1 0	2.0m	550	9 5	175	DO27
93	ZA120,A,B	xxx	120	1 0	2 0m	550		150C	A1ew
94	ZB120	†	120	1 0 §	2 0m	550		150A	A1bc
95	ZD120∅,A,B	xxx	120	1.0	2.0m	525	9.5	175A	A1cm
96#	ZF12B	10	120	1 0	3 3m	270	9.4	150A	DO13
97	ZH120,A,B	xxx	120	1.0	2 0m	550	9 5	175A	DO1
98	ZM120,A,B,D								
		xxxx	120	1 0	2 0m	550	9.5	175	DO41
99	ZM120C	∅	120	1 0	2.0m	550	9.5	175	DO41
100	1N4858,A,B	xxx	120	1 2	2.1m	550	10	175	DO29
101#	ZD120#	5	120	1 3	5.0	250	10	150J	DO13
102	ZM120∅	10	120	1 3	5.0	250	10	150J	DO13
103#	ZU120	10	120	1 3	5.0	250	10	150J	A1bg
104#	ZY120	5	120	1 3	5 0	250	10	150J	A1bg
105	1N3815,A,B	xxx	120	1 5	3.1m	350	10	175S	C14∅
106	1N4491	5	120	1 5	2.0m	400		175A	A196
107	JAN1N4491	10	120	1 5	2.0m	400	10	175A	A1v
108#	1S4120,A	xx	120	1 5	2.0m	230	10	150A	DO1
109	1 5JZ120,A,B,D								
		xxxx	120	1 5	3 1m	350	10	175	DO15
110	1 5JZ120C	∅	120	1.5	3.1m	350	10	175	DO15
111	1.5R120,A,B								
		xxx	120	1 5	3 0m	500	9 5	175A	A52c
112	1 5Z120,A,B,D								
		xxxx	120	1 5	3.1m	350	10	175	DO27
113	1 5Z120C	∅	120	1 5	3 1m	350	10	175	DO27
114	1N4080	5	120	2 0	2 5m	800	.50	100	A1nj
115	1N4080A	5	120	2 0	2 5m	800	.20	100	A1nj
116	2R120,A,B	xxx	120	2 0	4.2m	500	9 5	175A	DO27
117	2VR120,A,B	xxx	120	2 0	4 2m	500			A3e
118	LMZ120,A,-20								
		xx*	120	2 0	4 0m	325		150A	A1kk
119	ZBC120	†	120	2 0 §	4 0m	325		150A	A1bc
120	1N1889	10	120	3.0	7 5m	85 ∅	10	200A	DO4
121	1N1889A	5	120	3 0	7 5m	85 ∅	10	200A	DO4
122	1N1889B	1	120	3 0	7 5m	85 ∅	10	200A	DO4
123	1N5097	5	120	3 0	5.0m	325		175A	A146j
124	3R120,A,B	xxx	120	3 0	6 0m	275	9.5	175A	A1rw
125	3TZ120,A,B,D								
		xxxx	120	3.0	10m	275		175	A1ec
126	3TZ120C	∅	120	3 0	10m	275		175	A1ec
127	3VR120,A,B	xxx	120	3 0	6 0m	275			A222
128	CZ5097	10	120	3 0	5.0m	325	110	175A	A196e
129#	FDZ12B	10	120	3 0 ∅	10m	90	9 4	150A	S303
130	M3Z120,A	xx	120	3 0	6 2m	330		150A	A1kk
131	MZ112	5	120	3.0	5 0m	325	10	175A	A146j
132	MZ212	10	120	3.0	5 0m	325	10	175A	A146j
133	MZ312	20	120	3 0	5.0m	325	10	175A	A146j
134	UZ112	5	120	3 0	5.0m	325 ∅		175A	A60
135	UZ212	10	120	3 0	5.0m	325 ∅		175A	A146f
136	UZ312	20	120	3.0	5 0m	325 ∅		175A	A60
137	ZAC120,A,B	xxx	120	3 0	2.0m	550		150C	A1ey
138	ZCC120	†	120	3.0 §	5 0m	325		150A	A1ey
139	3T120,A,B	xx*	120	3.5	5 0m	350			S11
140#	4GZ12B	10	120	4 0	20m	1 2k	9.5		S19g
141	1N4984	5	120	5.0	10m	170		175A	A146m
142	JAN1N4984	5	120	5.0	10m	170	10	175A	A248f
143♦	1N5380	20	120	5.0	10m			200A	A1ee
144▼	1N5380A	10	120	5.0	10m	170		200A	A1ee
145▼	1N5380B	5	120	5 0	10m	170		200A	A1ee
146#	5346	10∅	120	5.0	5.0m	320		150J	A9h
147▼	CTZC120,A,B,D∅								
		xxxx	120	5 0 §	10	170 ∅	9.5	175A	A1ey
148▼	CTZC120C∅	1	120	5.0 §	10	170 ∅	9.5	175A	A1ey
149▼	CTZC120E∅	3	120	5 0 §	10	170 ∅	9 5	175A	A1ey
150	HZ120	10	120	5 0	8.0m	84	8.5	165C	M221
151	MZ5112	5	120	5.0	10m	170	10	175A	A60f
152	MZ5212	10	120	5 0	10m	170	10	175A	A60f
153	MZ5312	20	120	5 0	10m	170	10	175A	A60f
154▼	TZC120,A,B,D								
		xxxx	120	5.0 §	10	170 ∅	9 5	175A	A1ey
155▼	TZC120C	1	120	5 0 §	10	170 ∅	9 5	175A	A1ey
156▼	TZC120E	3	120	5 0 §	10	170 ∅	9.5	175A	A1ey
157▼	UZ5112	5	120	5.0	10m	170	10	175A	A146m
158♦	UZ5212	10	120	5 0	10m	170	10	175A	A146m
159	UZ5312	20	120	5 0	10m	170 ∅	10	175A	A146m
160	ZC120	†	120	5 0 §	10m	170		150A	A1ey
161	UZ4112	5	120	8 0	10m	170		175A	A146m
162	UZ4212	10	120	8 0	10m	170		175A	A146m
163	1N1810,A	xx	120	10	50m	56		175A	S11
164	1N1810B	20	120	10	50m	56			S11e
165	1N1810C,CA∅								
		xx	120	10 §	50m	56		175J	S19a
166	1N2010	10	120	10	50m	56	12	150A	S19a
167	1N2010A	5	120	10	50m	56	12	150A	S19a
168	1N2010C,CA∅								
		xx	120	10	50m	56	12	150A	S19a
169	1N3008,A,B	xxx	120	10	20m	75		175C	DO4∅
170	JAN1N3008B,RB								
		5	120	10	20m	75	10	150C	DO4

SYMBOLS AND CODES EXPLAINED IN INTERPRETER

2. SILICON REFERENCE DIODES

IN ORDER OF (1) REF. VOLTAGE, (2) DISSIPATION, and (3) TYPE No.

LINE No	3 TYPE No	TOLERANCE 1 20 10 5 2 ± (%)	NOM. REF. VOLT (V)	2 MAX. DISS. @ 25°C (W)	TEST CUR. Izt (A)	MAX. DYN. IMP (Ω)	TEMP. COEFF Tc	MAX TEMP (°C)	DWG. No.
1	1N3102,A	xx	120	10	3 0m	600	9 5	150A	S82
2	1N4288	20	120	10	20m	75	9.5	175C	S134
3	1N4288A	10	120	10	20m	75	9 5	175C	S134
4	1N4288B	5	120	10	20m	75	9 5	175C	S134
5	JAN1N4288B	5	120	10 §	20m	75	10	175S	S134a
6#	1S300	10	120	10	30m	50		150J	S19g
7#	1S5120,A	xx	120	10	50m	50	12	150C	DO4
8#	1S5120CØ	10	120	10	50m	50	12	150C	DO4
9#	1S6120	10	120	10	20m	80	10	150	DO4
10#	1S6120A	5	120	10	20m	80	10	150	DO4
11	10PZ120,A,B,D	xxxx	120	10	20m	75	9 5	175	DO4
12	10PZ120C	∅	120	10	20m	75	9 5	175	DO4
13	10RZ120,A,B,D	xxxx	120	10	30m	120	12	155	DO4
14	10RZ120C	∅	120	10	30m	120	12	155	DO4
15	AV8120	Ø2	120	10	50m	70		150A	S11
16#	GZ12B	10	120	10 ∅	16m	56	9 4	150A	DO4
17#	PZ12B	10	120	10 ∅	16m	56	9 4	150A	S95a
18#	4146	10Ø	120	15	35m	45		150J	S87
19#	4246	10Ø	120	15	35m	45		150J	S87
20#	ZL120	10	120	25 ∅	5 0	250	10	150J	M41
21#	ZX120	5	120	25 ∅	5 0	250	10	150J	M41
22#	4346	10Ø	120	30	35m	45		150J	S87
23#	4446	10Ø	120	30	35m	45		150J	S87
24	1N2841,A,B	xxx	120	50	100m	40	9 5	175S	C5a
25	JAN1N2841B,RB	5	120	50	100m	40	1 0	150C	C5a
26	1N3343	20	120	50	100m	40	9 5	175J	DO5
27	1N3343A	10	120	50	100m	40	9 5	175J	DO5
28	1N3343B	5	120	50	100m	40	9 5	175J	DO5
29	JAN1N3343B,RB	5	120	50	100m	40	10	150	DO5
30	50T120,A,B	xx*	120	50	100m	40	9 5		S19e
31	AV51120	5	120	50	100m	40	9 5	150C	C5a
32	AV17	10	123	1 0	5 0m	500		150A	A19
33	AV117	10	123	10	50m	70		150A	S11
34	IDAZ124,A,B,CØ	xxxx	124	500m	1 0m			200A	A1hc
35	IDA1Z124,A,B,CØ	xxxx	124	1 0	8 0m			200A	A1ht
36	AV2125	Ø2	125	1 0	5 0m	500		150A	A19
37	AV8125	Ø2	125	10	50m	70		150A	S11
38	AV51125	5	125	50	100m	45	9 5	150C	C5a
39	PS6327	15	127	50		20		200A	DO14
40	1N239	10Ø	128	15	20m			200A	C12a
41▼	1N1327	10	128	150m	200u		12	150A	C1
42▼	1N1327A	5	128	150m	200u		12	150A	C1
43	IDAZ128,A,B,CØ	xxxx	128	500m	1 0m			200A	A1hc
44	IDA1Z128,A,B,CØ	xxxx	128	1 0	8 0m			200A	A1ht
45	1/4A130,A,B	xxx	130	250m	480u	1 9k	9 5	175	DO7
46	1/4M130Z,10,5	xxx	130	250m	480u	1 9k	9 6	175J	A1cy
47	25N130	20	130	25	.48m	1 9k		250	DO7
48	1N741,A	xx	130	25	1 0m	650	9 6	175A	DO7
49	1N741B	20	130	25	1 0m	650			DO7
50	1N988,A,B	xxx	130	40	95m	1 1k	9 5	175S	DO7
51	JAN1N988B	5	130	40	95m	1 1k	11	175A	DO7
52	CZA130D,10,5	xxx	130	400m	250u	2 0k	9 5	175	M371
53	CZB130D,10,5	xxx	130	400m	480u	1 9k	9 5	175	M371
54	CZC130D,10,5	xxx	130	400m	950u	1 1k	9 5	175	M371
55	CZD130D,10,5	xxx	130	400m	250u	2 0k	9 5	175	M451
56	CZE130D,10,5	xxx	130	400m	950u	1 1k	9 5	175	M451
57	HM130,A,B	xxx	130	400m§	950u	1 1k		175A	A196c
58	M4Z130,A,-20	xx*	130	400m	950u	1 1k		150A	A1kk
59	MACZA130D,10,5	xxx	130	400m	250u	2 0k	9 5	175	M453
60	MACZB130D,10,5	xxx	130	400m	480u	1 9k	9.5	175	M453
61	MACZC130D,10,5	xxx	130	400m	950u	1 1k	9 5	175	M453
62	MACZD130D,10,5	xxx	130	400m	250u	2 0k	9 5	175	M453
63	MACZE130D,10,5	xxx	130	400m	950u	1 1k	9 5	175	M453
64	MBCZA130D,10,5	xxx	130	400m	250u	2 0k	9 5	175	M454
65	MBCZB130D,10,5	xxx	130	400m	480u	1 9k	9 5	175	M454
66	MBCZC130D,10,5	xxx	130	400m	950u	1 1k	9 5	175	M454
67	MBCZD130D,10,5	xxx	130	400m	250u	2 0k	9 5	175	M454
68	MBCZE130D,10,5	xxx	130	400m	950u	1 1k	9 5	175	M454
69	MCCZA130D,10,5	xxx	130	400m	250u	2 0k	9 5	175	M455
70	MCCZB130D,10,5	xxx	130	400m	480u	1 9k	9 5	175	M455
71	MCCZC130D,10,5	xxx	130	400m	950u	1 1k	9 5	175	M455
72	MCCZD130D,10,5	xxx	130	400m	250u	2 0k	9 5	175	M455
73	MCCZE130D,10,5	xxx	130	400m	950u	1 1k	9 5	175	M455
74	MDCZA130D,10,5	xxx	130	400m	250u	2 0k	9 5	175	M410
75	MDCZB130D,10,5	xxx	130	400m	480u	1 9k	9 5	175	M410
76	MDCZC130D,10,5	xxx	130	400m	950u	1 1k	9 5	175	M410
77	MDCZD130D,10,5	xxx	130	400m	250u	2 0k	9 5	175	M410
78	MDCZE130D,10,5	xxx	130	400m	950u	1 1k	9 5	175	M410
79	MZC130A10	†	130	400m§	380u	2.3k	11	175J	M468
80	MZC130B10	§†	130	400m§	250u	4 5k		175J	M468
81	1N5274	20†	130	50	95m			200A	DO7
82	1N5274A,B	§Ø	130	50	95m	1 1k	11	200A	DO7
83	MZ92-130	†	130	500m§	950m		9 2	150J	C103
84	S5274,A,B	xxx	130	500m	950u	1 1m	11	175	DO41
85	7JZ130	†	130	750m	950u	1 1k	9 5	175	DO15
86	7Z130,A,B,D	xxxx	130	750m	950u	1.1k	9 5	175	DO27
87	7Z130C	∅	130	750m	950u	1 1k	9 5	175	DO27
88	7ZM130,A,B,D	xxxx	130	750m	950u	1 1k	9 5	175	DO41
89	7ZM130C	∅	130	750m	950u	1 1k	9 5	175	DO41
90	1N3706	20	130	750m§	950u	1 1k		175S	A1az
91	1N3706A	10	130	750m§	950u	1 1k		175S	A1az
92	1N3706B	5	130	750m§	950u	1 1k		175S	A1az
93	MMZ130,A,-20	xx*	130	750m	950u	1 1k		150A	A1kk
94	1A130M,A,B	xxx	130	1 0	1 9m	700		75A	DO15
95	1E130Z,10,5	xxx	130	1 0	1 9m	700	9 5	150A	A52g
96	1M130Z,10,5	xxx	130	1 0	1.9m	700	9 5	175S	DO1
97	1N1798,A	xx	130	1 0	5 0m	450		175S	DO13
98	1N3047,A,B	xxx	130	1 0	1.9m	700		175A	A31a
99	JAN1N3047B	5	130	1 0	1 9m	700	10	175A	A31c
100	1N4189	20	130	1 0	1 9m	700	9 5	175	DO29
101	1N4189A	10	130	1 0	1 9m	700	9 5	175	DO29
102	1N4189B	5	130	1 0	1 9m	700	9 5	175	DO29
103	1N4354,A,B	xxx	130	1 0	1 9m	700	9 5	300S	DO7
104♦	1N4431	20	130	1 0	1 9m	500		175S	A266a
105	1N4431A	10	130	1 0	1 9m	500	9 5	175A	A1cm
106	1N4431B	5	130	1 0	1 9m	500	9 5	175A	A1cm
107	1N5590	20	130	1 0 §	1 9			200A	A196d
108	1N5590A	10	130	1 0 §	1.9m	700		200A	A196d
109	1N5590B	5	130	1 0 §	1 9m	700		200A	A196d
110	1N5660		130	1 0	1 0m		10	175A	DO13
111	1N5660A		130	1 0	1 0m		10	175A	DO13
112	1R130,A,B	xxx	130	1 0	1 9m	700	9 5	175A	A52c
113#	1S259	10	130	1 0	3 0m	450		150J	A56a
114#	1S3130	xx	130	1 0	2.0m	800	10	150	A3
115	AV2130	Ø2	130	1 0	5.0m	500		150A	A19
116	CZ130,A,B,D	xxxx	130	1 0	3 0m	750	9 5	175	DO15
117	CZ130C	∅	130	1 0	3 0m	750	9 5	175	DO15
118	HW130,A,B	xxx	130	1 0	1 9m	700		175	A196
119	JZ130,A,B,D	xxxx	130	1 0	1.9m	700	9 5	175	DO15
120	JZ130C	∅	130	1 0	1.9m	700	9 5	175	DO15
121	LPM130,A,-20	xx*	130	1 0	1 9m	700		150A	A1kk
122	TC130A5C	5△∅	130	1 0	2.5m	840	05	175A	A1su
123	TZ130,A,B,D	xxxx	130	1 0	3 0m	750	9 5	175	DO27
124	TZ130C	∅	130	1 0	3 0m	750	9 5	175	DO27
125	UZ8113	5	130	1 0	1 9m	700	10	175	A146h
126	UZ8213	10	130	1 0	1 9m	700	10	175	A146h
127	VR130,A,B	xxx	130	1 0	1 9m	750		125A	A1b
128	Z130,A,B,D	xxxx	130	1 0	1 9m	700	9 5	175	DO27
129	Z130C	∅	130	1 0	1 9m	700	9 5	175	DO27
130	ZA130,A,B	xxx	130	1 0	1 9m	700		150C	A1ew
131	ZB130	†	130	1 0 §	1.9m	700		150A	A1bc
132	ZD130∅,A,B	xxx	130	1 0	1 9m	650	9 5	175A	A1cm
133	ZH130,A,B	xxx	130	1 0	1 9m	700	9 5	175A	DO1
134	ZM130,A,B,D	xxxx	130	1 0	1 9m	700	9.5	175	DO41
135	ZM130C	∅	130	1 0	1 9m	700	9.5	175	DO41
136	1N4859,A,B	xxx	130	1 2	1 9m	700	11	175	DO29
137#	ZD130#	5	130	1 3	5 0	300	10	150J	DO13
138#	ZY130	5	130	1 3	5 0	300	10	150J	A1bg
139	1N3816,A,B	xxx	130	1 5	2 9m	400	10	175S	C14∅
140	1N4492	5	130	1 5	1 9m	500		175A	A196
141	JAN1N4492	10	130	1 5	1 9m	500	10	175A	A1v
142#	1S4130,A	xx	130	1 5	2 0m	265	10	150A	DO1
143	1 5JZ130,A,B,D	xxxx	130	1.5	2 9m	400	10	175	DO15
144	1 5JZ130C	∅	130	1 5	2 9m	400	10	175	DO15
145	1 5R130,A,B	xxx	130	1 5	2 8m	600	9 5	175A	A52c
146	1 5Z130,A,B,D	xxxx	130	1.5	2 9m	400	10	175	DO27
147	1 5Z130C	∅	130	1.5	2 9m	400	10	175	DO27
148	2R130,A,B	xxx	130	2.0	3 8m	600	9 5	175A	DO27
149	2VR130,A,B	xxx	130	2 0	3 8m	600			A3e
150	LMZ130,A,-20	xx*	130	2.0	4 0m	400		150A	A1kk
151	ZBC130	†	130	2 0 §	3 8m	375		150A	A1bc
152	1N4081	5	130	2 5	2 5m	840	.50	100	A1su
153	1N4081A	5	130	2.5	2 5m	840	20	100	A1su
154	1N5098	5	130	3 0	5 0m	375		175A	A146j
155	3R130,A,B	xxx	130	3 0	5 7m	350	9 5	175A	A1rw
156	3TZ130,A,B,D	xxxx	130	3.0	5.0m	350		175	A1ec
157	3TZ130C	∅	130	3 0	5 0m	350		175	A1ec
158	3VR130,A,B	xxx	130	3 0	5 7m	350			A222
159	CZ5098	10	130	3 0	5 0m	375	120	175A	A196e
160	M3Z130,A	xx	130	3 0	5 6m	390		150A	A1kk
161	MZ113	5	130	3 0	5 0m	375	10	175A	A146j
162	MZ213	10	130	3 0	5 0m	375	10	175A	A146j
163	MZ313	20	130	3 0	5 0m	375	10	175A	A146j
164	UZ113	5	130	3 0	5 0m	375 Ø		175A	A60
165	UZ213	10	130	3 0	5 0m	375 Ø		175A	A146f
166	UZ313	20	130	3 0	5 0m	375 Ø		175A	A60
167	ZAC130,A,B	xxx	130	3 0	1 9m	700		150C	A1ey
168	ZCC130	†	130	3 0 §	5 0m	375		150A	A1ey
169	3T130,A,B	xx*	130	3 5	5 0m	450			S11

SYMBOLS AND CODES EXPLAINED IN INTERPRETER

2. SILICON REFERENCE DIODES

IN ORDER OF (1) REF. VOLTAGE, (2) DISSIPATION, and (3) TYPE No.

LINE No	3 TYPE No.	TOLERANCE 1 20 10 5 2 ± (%)	NOM. REF. VOLT. (V)	2 MAX. DISS. @ 25°C (W)	TEST CUR. Izt (A)	MAX. DYN. IMP. (Ω)	TEMP. COEFF Tc	MAX. TEMP (°C)	DWG. No.
1	1N4985	5	130	5 0	10m	190		175A	A146m
2	JAN1N4985	5	130	5 0	10m	190	10	175A	A248f
3♦	1N5381	20	130	5 0	10m			200A	A1ee
4▼	1N5381A	10	130	5 0	10m	190		200A	A1ee
5▼	1N5381B	5	130	5 0	10m	190		200A	A1ee
6▼	CTZC130,A,B,DØ	xxxx	130	5 0 §	10	190 Ø	9.5	175A	A1ey
7▼	CTZC130CØ	1	130	5 0 §	10m	190 Ø	9 5	175A	A1ey
8▼	CTZC130EØ	3	130	5 0 §	10m	190 Ø	9 5	175A	A1ey
9	MZ5113	5	130	5 0	10m	190	10	175A	A60f
10	MZ5213	10	130	5 0	10m	190	10	175A	A60f
11	MZ5313	20	130	5.0	10m	190	10	175A	A60f
12▼	TZC130,A,B,D	xxxx	130	5 0 §	10	190 Ø	9.5	175A	A1ey
13▼	TZC130C	1	130	5 0 §	10m	190 Ø	9.5	175A	A1ey
14▼	TZC130E	3	130	5 0 §	10m	190 Ø	9.5	175A	A1ey
15▼	UZ5113	5	130	5 0	10m	190	10	175A	A146m
16♦	UZ5213	10	130	5.0	10m	190	10	175A	A146m
17	UZ5313	20	130	5 0	10m	190 Ø	10	175A	A146m
18	ZC130	†	130	5 0 §	10m	190		150A	A1ey
19	UZ4113	5	130	8 0	10m	190		175A	A146m
20	UZ4213	10	130	8.0	10m	190		175A	A146m
21	1N1811,A	xx	130	10	50m	65		175A	S11
22	1N1811B	20	130	10	50m	65			S11e
23	1N1811C,CAØ	xx	130	10 §	50m	65		175J	S19a
24	1N2011	10	130	10	50m	65	12	150A	S19a
25	1N2011A	5	130	10	50m	65	12	150A	S19a
26	1N2011C,CAØ	xx	130	10	50m	65	12	150A	S19a
27	1N3009,A,B	xxx	130	10	19m	100		175C	DO4Ø
28	JAN1N3009B,RB	5	130	10	19m	100	10	150C	DO4
29	1N4289	20	130	10	19m	100	9.5	175C	S134
30	1N4289A	10	130	10	19m	100	9 5	175C	S134
31	1N4289B	5	130	10	19m	100	9 5	175C	S134
32	JAN1N4289B	5	130	10 §	1 9m	100	10	175S	S134a
33#	1S301	10	130	10	30m	60		150J	S19g
34#	1S5130,A	xx	130	10	50m	50	12	150C	DO4
35#	1S5130CØ	10	130	10	50m	50	12	150C	DO4
36#	1S6130	10	130	10	20m	120	10	150	DO4
37#	1S6130A	5	130	10	20m	80	10	150	DO4
38	10PZ130,A,B,D	xxxx	130	10	19m	100	9 5	175	DO4
39	10PZ130C	Ø	130	10	19m	100	9 5	175	DO4
40	10RZ130,A,B,D	xxxx	130	10	30m	160	12	155	DO4
41	10RZ130C	Ø	130	10	30m	160	12	155	DO4
42	AV8130	Ø2	130	10	50m	70		150A	S11
43#	ZX130	5	130	25 Ø	5 0	300	10	150J	M41
44	1N2842,A,B	xxx	130	50	95m	50	9 5	175S	C5a
45	JAN1N2842B,RB	5	130	50	95m	50	1 0	150C	C5a
46	1N3344	20	130	50	95m	50	9 5	175J	DO5
47	1N3344A	10	130	50	95m	50	9 5	175J	DO5
48	1N3344B	5	130	50	95m	50	9 5	175J	DO5
49	JAN1N3344B,RB	5	130	50	95m	50	10	150	DO5
50	50T130,A,B	xx*	130	50	95m	50	9 5		S19e
51	AV51130	5	130	50	95m	50	9 5	150C	C5a
52	IDAZ132,A,B,CØ	xxxx	132	500m	1 0m			200A	A1hc
53	IDA1Z132,A,B,CØ	xxxx	132	1 0	6 0m			200A	A1ht
54	AV2135	Ø2	135	1.0	5 0m	500		150A	A19
55#	5347	10Ø	135	5 0	3 0m	450		150J	A9h
56	AV8135	Ø2	135	10	50m	70		150A	S11
57#	4147	10Ø	135	15	30m	80		150J	S87
58#	4247	10Ø	135	15	30m	80		150J	S87
59#	4347	10Ø	135	30	30m	80		150J	S87
60#	4447	10Ø	135	30	30m	80		150J	S87
61	IDAZ136,A,B,CØ	xxxx	136	500m	1 0m			200A	A1hc
62	IDA1Z136,A,B,CØ	xxxx	136	1 0	6 0m			200A	A1ht
63	1/4A140,A,B	xxx	140	250m	450u	2 2k	9 5	175	DO7
64	1/4M140Z,10,5	xxx	140	250m	450u	2 2k	9.7	175J	A1cy
65	.25N140	20	140	25	45m	2 2k		250	DO7
66	CZA140D,10,5	xxx	140	400m	250u	2 5k	9.5	175	M371
67	CZB140D,10,5	xxx	140	400m	450u	2 2k	9 5	175	M371
68	CZC140D,10,5	xxx	140	400m	900u	1 4k	9.5	175	M371
69	CZD140D,10,5	xxx	140	400m	250u	2 5k	9 5	175	M451
70	CZE140D,10,5	xxx	140	400m	900u	1 4k	9 5	175	M451
71	MACZA140D,10,5	xxx	140	400m	250u	2 5k	9 5	175	M453
72	MACZB140D,10,5	xxx	140	400m	450u	2 2k	9 5	175	M453
73	MACZC140D,10,5	xxx	140	400m	900u	1 4k	9 5	175	M453
74	MACZD140D,10,5	xxx	140	400m	250u	2 5k	9 5	175	M453
75	MACZE140D,10,5	xxx	140	400m	900u	1 4k	9 5	175	M453
76	MBCZA140D,10,5	xxx	140	400m	250u	1 5k	9 5	175	M454
77	MBCZB140D,10,5	xxx	140	400m	450u	2 2k	9 5	175	M454
78	MBCZC140D,10,5	xxx	140	400m	900u	1 4k	9 5	175	M454
79	MBCZD140D,10,5	xxx	140	400m	250u	2 5k	9 5	175	M454
80	MBCZE140D,10,5	xxx	140	400m	900u	1 4k	9 5	175	M454
81	MCCZA140D,10,5	xxx	140	400m	250u	2 5k	9 5	175	M455
82	MCCZB140D,10,5	xxx	140	400m	450u	2 2k	9 5	175	M455
83	MCCZC140D,10,5	xxx	140	400m	900u	1.4k	9.5	175	M455
84	MCCZD140D,10,5	xxx	140	400m	250u	2.5k	9.5	175	M455
85	MCCZE140D,10,5	xxx	140	400m	900u	1 4k	9 5	175	M455
86	MDCZA140D,10,5	xxx	140	400m	250u	2 5k	9.5	175	M410
87	MDCZB140D,10,5	xxx	140	400m	450u	2.2k	9 5	175	M410
88	MDCZC140D,10,5	xxx	140	400m	900u	1 4k	9.5	175	M410
89	MDCZD140D,10,5	xxx	140	400m	250u	2 5k	9 5	175	M410
90	MDCZE140D,10,5	xxx	140	400m	900u	1.4k	9.5	175	M410
91	MZC140A10	†	140	400m§	360u	2 7k	11	175J	M468
92	MZC140B10	§†	140	400m§	250u	4.5k		175J	M468
93	1N5275	20†	140	.50	90m			200A	DO7
94	1N5275A,B	§Ø	140	.50	.90m	1 3k	11	200A	DO7
95	IDAZ140,A,B,CØ	xxxx	140	500m	1 0m			200A	A1hc
96	MZ92-140	†	140	500m§	900m		9.2	150J	C103
97	S5275,A,B	xxx	140	500m	900u	1.3m	11	175	DO41
98	.7JZ140	†	140	750m	900u	1.3k	9.5	175	DO15
99	7Z140,A,B,D	xxxx	140	750m	900u	1 3k	9.5	175	DO27
100	7Z140C	Ø	140	750m	900u	1 3k	9 5	175	DO27
101	.7ZM140,A,B,D	xxxx	140	750m	900u	1 3k	9 5	175	DO41
102	7ZM140C	Ø	140	750m	900u	1 3k	9.5	175	DO41
103	1M140Z,10,5	xxx	140	1.0	1.8m	900	9.5	175S	DO1
104	1R140,A,B	xxx	140	1 0	1 8m	900	9.5	175A	A52c
105#	1S260	10	140	1 0	3.0m	500		150J	A56a
106	AV2140	Ø2	140	1 0	5 0m	800		150A	A19
107	CZ140,A,B,D	xxxx	140	1 0	3.0m	850	9.5	175	DO15
108	CZ140C	Ø	140	1 0	3 0m	850	9 5	175	DO15
109	IDA1Z140,A,B,CØ	xxxx	140	1 0	5 0m			200A	A1ht
110	JZ140,A,B,D	xxxx	140	1 0	1 8m	900	9 5	175	DO15
111	JZ140C	Ø	140	1 0	1.8m	900	9 5	175	DO15
112	TZ140,A,B,D	xxxx	140	1.0	3.0m	850	9.5	175	DO27
113	TZ140C	Ø	140	1 0	3 0m	850	9 5	175	DO27
114	UZ8114	5	140	1 0	1 8m	850	10	175	A146h
115	UZ8214	10	140	1 0	1.8m	850	10	175	A146h
116	Z140,A,B,D	xxxx	140	1.0	1 8m	900	9.5	175	DO27
117	Z140C	Ø	140	1 0	1 8m	900	9.5	175	DO27
118	ZM140,A,B,D	xxxx	140	1.0	1.8m	900	9 5	175	DO41
119	ZM140C	Ø	140	1 0	1.8m	900	9.5	175	DO41
120	1.5JZ140,A,B,D	xxxx	140	1.5	2.7m	600	10	175	DO15
121	1.5JZ140C	Ø	140	1 5	2 7m	600	10	175	DO15
122	1 5M140Z,10,5	xxx	140	1 5	2.7m	600	9 5	175S	C12
123	1 5R140,A,B	xxx	140	1 5	2 5m	700	9 5	175A	A52c
124	1 5Z140,A,B,D	xxxx	140	1 5	2 7m	600	10	175	DO27
125	1 5Z140C	Ø	140	1.5	2 7m	600	10	175	DO27
126	2R140,A,B	xxx	140	2 0	3 6m	700	9.5	175A	DO27
127	ZBC140	†	140	2.0 §	3 6m	550		150A	A1bc
128	1N4082	5	140	2.5	2 5m	960	.50	100	A1su
129	1N4082A	5	140	2.5	2 5m	960	20	100	A1su
130	1N5099	5	140	3.0	5.0m	550		175A	A146j
131	3R140,A,B	xxx	140	3.0	5.4m	450	9 5	175A	A1rw
132	3TZ140,A,B,D	xxxx	140	3.0	5 0m	450		175	A1ec
133	3TZ140C	Ø	140	3.0	5.0m	450		175	A1ec
134	CZ5099	10	140	3.0	5 0m	550	130	175A	A196e
135	MZ114	5	140	3.0	5 0m	550	10	175A	A146j
136	MZ214	10	140	3.0	5.0m	550	10	175A	A146j
137	MZ314	20	140	3.0	5 0m	550	10	175A	A146j
138	UZ114	5	140	3.0	5.0m	550 Ø		175A	A60
139	UZ214	10	140	3.0	5.0m	550 Ø		175A	A146f
140	UZ314	20	140	3.0	5.0m	550 Ø		175A	A60
141	ZCC140	†	140	3 0 §	5.0m	550		150A	A1ey
142	1N5126	5	140	5.0	8 0m	230		175A	A146m
143♦	1N5382	20	140	5 0	8.0m			200A	A1ee
144▼	1N5382A	10	140	5.0	8.0m	230		200A	A1ee
145▼	1N5382B	5	140	5.0	8.0m	230		200A	A1ee
146▼	CTZC140,A,B,DØ	xxxx	140	5 0 §	8.0m	230 Ø	9.5	175A	A1ey
147▼	CTZC140CØ	1	140	5 0 §	8.0m	230 Ø	9 5	175A	A1ey
148▼	CTZC140EØ	3	140	5 0 §	8.0m	230 Ø	9.5	175A	A1ey
149	MZ5114	5	140	5.0	8 0m	230	10		A60f
150	MZ5214	10	140	5.0	8 0m	230	10		A60f
151	MZ5314	20	140	5 0	8.0m	230	10		A60f
152▼	TZC140,A,B,D	xxxx	140	5 0 §	8 0m	230 Ø	9 5	175A	A1ey
153▼	TZC140C	1	140	5 0 §	8.0m	230 Ø	9.5	175A	A1ey
154▼	TZC140E	3	140	5 0 §	8 0m	230 Ø	9 5	175A	A1ey
155▼	UZ5114	5	140	5 0	8 0m	230	10	175A	A146m
156♦	UZ5214	10	140	5 0	8 0m	230	10	175A	A146m
157	UZ5314	20	140	5 0	8 0m	230 Ø	10	175A	A146m
158	ZC140	†	140	5.0 §	8 0m	230		150A	A1ey
159	1N3010,A,B	xxx	140	10	18m	125	9.5	175S	DO4
160#	1S302	10	140	10	30m	70		150J	S19g
161	AV8140	Ø2	140	10	50m	95		150A	S11
162	1N3345	20	140	50	90m	60	9.5	175J	DO5
163	1N3345A	10	140	50	90m	60	9 5	175J	DO5
164	1N3345B	5	140	50	90m	60	9.5	175J	DO5

SYMBOLS AND CODES EXPLAINED IN INTERPRETER

2. SILICON REFERENCE DIODES

IN ORDER OF (1) REF. VOLTAGE, (2) DISSIPATION, and (3) TYPE No.

LINE No.	3 TYPE No	TOLERANCE 1 20 10 5 2 ± (%)	NOM. REF VOLT. (V)	2 MAX. DISS. @ 25°C (W)	TEST CUR. Izt (A)	MAX. DYN. IMP. (Ω)	TEMP. COEFF Tc	MAX. TEMP (°C)	DWG. No.
1	AV51140	5	140	50	90m	60	9 5	150C	C5a
2	IDAZ144,A,B,CØ	xxxx	144	500m	1.0m			200A	A1hc
3	IDA1Z144,A,B,CØ	xxxx	144	1.0	5 0m			200A	A1ht
4	1N1946,A,B	xx1	145	20	.10m			150	DO7
5	AV2145	2	145	1 0	5.0m	800		150A	A19
6	1N1890	10	145	3.0	7.5m	110 Ø	12	200A	DO4
7	1N1890A	5	145	3.0	7.5m	110 Ø	12	200A	DO4
8	1N1890B	1	145	3 0	7 5m	110 Ø	12	200A	DO4
9	AV8145	Ø2	145	10	50m	95		150A	S11
10	AV51145	5	145	50	90m	70	9.5	150C	C5a
11	IDAZ148,A,B,CØ	xxxx	148	500m	1 0m			200A	A1hc
12	IDA1Z148,A,B,CØ	xxxx	148	1.0	4 0m			200A	A1ht
13	1N2000,A,B	xx1	150	15	10m			150	C1
14	1/4A150,A,B	xxx	150	250m	420u	2 5k	9 5	175	DO7
15	1/4M150Z,10,5	xxx	150	250m	420u	2 5k	9.7	175J	A1cy
16	25N150	20	150	.25	42m	2 5k		250	DO7
17	1N742,A	xx	150	25	1 0m	860	9 6	175A	DO7
18	1N742B	20	150	25	1 0m	860			DO7
19#	MZ15B	xx	150	250m	650m	2.0k	9 6	150A	DO7
20	1N672	5	150	.40	1 0m	1.0k	10	200S	A31b
21	1N989,A,B	xxx	150	40	85m	1 5k	9 5	175S	DO7
22	JAN1N989B	5	150	40	85m	1 5k	11	175A	DO7
23	CZA150D,10,5	xxx	150	400m	250u	3 0k	9 5	175	M371
24	CZB150D,10,5	xxx	150	400m	420u	2 5k	9 5	175	M371
25	CZC150D,10,5	xxx	150	400m	850u	1 5k	9 5	175	M371
26	CZD150D,10,5	xxx	150	400m	250u	3 0k	9 5	175	M451
27	CZE150D,10,5	xxx	150	400m	850u	1.5k	9.5	175	M451
28	HM150,A,B	xxx	150	400m§	850u	1 5k		175A	A196c
29	M4Z150,A,-20	xx*	150	400m	850u	1.5k		150A	A1kk
30	MACZA150D,10,5	xxx	150	400m	250u	3 0k	9 5	175	M453
31	MACZB150D,10,5	xxx	150	400m	420u	2.5k	9 5	175	M453
32	MACZC150D,10,5	xxx	150	400m	850u	1 5k	9 5	175	M453
33	MACZD150D,10,5	xxx	150	400m	250u	3.0k	9 5	175	M453
34	MACZE150D,10,5	xxx	150	400m	850u	1 5k	9 5	175	M453
35	MBCZA150D,10,5	xxx	150	400m	250u	3 0k	9 5	175	M454
36	MBCZB150D,10,5	xxx	150	400m	420u	2 5k	9 5	175	M454
37	MBCZC150D,10,5	xxx	150	400m	850u	1 5k	9 5	175	M454
38	MBCZD150D,10,5	xxx	150	400m	250u	3 0k	9 5	175	M454
39	MBCZE150D,10,5	xxx	150	400m	850u	1 5k	9 5	175	M454
40	MCCZA150D,10,5	xxx	150	400m	250u	3 0k	9 5	175	M455
41	MCCZB150D,10,5	xxx	150	400m	420u	2 5k	9 5	175	M455
42	MCCZC150D,10,5	xxx	150	400m	850u	1 5k	9 5	175	M455
43	MCCZD150D,10,5	xxx	150	400m	250u	3 0k	9.5	175	M455
44	MCCZE150D,10,5	xxx	150	400m	850u	1 5k	9 5	175	M455
45	MDCZA150D,10,5	xxx	150	400m	250u	3 0k	9 5	175	M410
46	MDCZB150D,10,5	xxx	150	400m	420u	2 5k	9 5	175	M410
47	MDCZC150D,10,5	xxx	150	400m	850u	1.5k	9 5	175	M410
48	MDCZD150D,10,5	xxx	150	400m	250u	3 0k	9 5	175	M410
49	MDCZE150D,10,5	xxx	150	400m	850u	1 5k	9 5	175	M410
50	MZC150A10	†	150	400m§	330u	3 0k	11	175J	M468
51	MZC150B10	§†	150	400m§	250u	5 0k		175J	M468
52	1N3430	10	150	50	1 0m	1 8k	8 7	200A	P5
53	1N5276	20†	150	50	85m			200A	DO7
54	1N5276A,B	§Ø	150	50	85m	1 5k	11	200A	DO7
55#	DZ15B	xx	150	500m§	1 3m	690	9 6	150A	A100
56	MZ92-150	†	150	500m§	850m		9.2	150J	C103
57	S5276,A,B	xxx	150	500m	850u	1.5m	11	175	DO41
58	7JZ150	†	150	750m	850u	1 5k	9 5	175	DO15
59	7Z150,A,B,D	xxxx	150	750m	850u	1 5k	9.5	175	DO27
60	7Z150C	Ø	150	750m	850u	1 5k	9 5	175	DO27
61	7ZM150,A,B,D	xxxx	150	750m	850u	1 5k	9 5	175	DO41
62	7ZM150C	Ø	150	750m	850u	1 5k	9 5	175	DO41
63	1N3707	20	150	750m§	850u	1 5k		175S	A1az
64	1N3707A	10	150	750m§	850u	1 5k		175S	A1az
65	1N3707B	5	150	750m§	850u	1 5k		175S	A1az
66	MMZ150,A,-20	xx*	150	750m	850u	1 5k		150A	A1kk
67	1A150M,A,B	xxx	150	1 0	1 7m	1 0k		75A	DO15
68	1E150Z,10,5	xxx	150	1.0	1 7m	1 0k	9 5	150A	A52g
69	1M150Z,10,5	xxx	150	1.0	1 7m	1 0k	9 5	175S	DO1
70	1N1433	5	150	1 0	1 0m	1.2kØ	10	200A	A154
71	1N1799,A	xx	150	1 0	5 0m	600		175S	DO13
72	1N3048,A,B	xxx	150	1 0	1 7m	1.0k		175A	A31a
73	JAN1N3048B	5	150	1.0	1 7m	1 0k	10	175A	A31c
74	1N3099,A	xx	150	1 0	3 0m	725	9.5	200C	A126
75	1N4190	20	150	1.0	1 7m	1.0k	9 5	175	DO29
76	1N4190A	10	150	1.0	1.7m	1 0k	9.5	175	DO29
77	1N4190B	5	150	1 0	1 7m	1 0k	9.5	175	DO29
78	1N4355,A,B	xxx	150	1 0	1.7m	1.0k	9 5	300S	DO7
79♦	1N4432	20	150	1.0	1.7m	800		175S	A266a
80	1N4432A	10	150	1 0	1.7m	800	9 5	175A	A1cm
81	1N4432B	5	150	1 0	1 7m	800	9 5	175A	A1cm
82	1N5591	20	150	1 0 §	1 7			200A	A196d
83	1N5591A	10	150	1 0 §	1 7m	1.0k		200A	A196d
84	1N5591B	5	150	1 0 §	1 7m	1.0k		200A	A196d
85	1N5661		150	1 0	1.0m		10	175A	DO13
86	1N5661A		150	1 0	1.0m		10	175A	DO13
87	1R150,A,B	xxx	150	1.0	1.7m	1.0k	9 5	175A	A52c
88#	1S261	10	150	1.0	3 0m	600		150J	A56a
89#	1S3150	xx	150	1 0	2 0m	900	10	150	A3
90	AV18	10	150	1 0	5 0m	800		150A	A19
91	AV2150	Ø2	150	1 0	5 0m	800		150A	A19
92	CZ150,A,B,D	xxxx	150	1 0	3.0m	950	9 5	175	DO15
93	CZ150C	Ø	150	1 0	3 0m	950	9 5	175	DO15
94	EVR150,A,B	xxx	150	1 0	2 0m	1.0k		175A	DO27
95#	EZ15B	10	150	1.0	2 7m	6.0k	9 6		A1em
96	HW150,A,B	xxx	150	1 0	1 7m	1 0k		175	A196
97	IDA1Z150,A,B,CØ	xxxx	150	1 0	3 0m			200A	A1ht
98	JZ150,A,B,D	xxxx	150	1 0	1 7m	1 0k	9 5	175	DO15
99	JZ150C	Ø	150	1 0	1 7m	1 0k	9 5	175	DO15
100	LPM150,A,-20	xx*	150	1 0	1 7m	1 0k		150A	A1kk
101	TC150A5C	5ΔØ	150	1 0	2.5m	1 0k	05	175A	A1su
102	TZ150,A,B,D	xxxx	150	1.0	3 0m	950	9 5	175	DO27
103	TZ150C	Ø	150	1 0	3 0m	950	9 5	175	DO27
104	UZ8115	5	150	1.0	1.7m	1.0k	10	175	A146h
105	UZ8215	10	150	1 0	1 7m	1.0k	10	175	A146h
106	VR150,A,B	xxx	150	1 0	1 7m	1.0k		125A	A1b
107	Z150,A,B,D	xxxx	150	1 0	1 7m	1 0k	9 5	175	DO27
108	Z150C	Ø	150	1 0	1.7m	1 0k	9 5	175	DO27
109	ZA150,A,B	xxx	150	1 0	1 7m	1 0k		150C	A1ew
110	ZB150	†	150	1 0 §	1.7m	1 0k		150A	A1bc
111	ZD150Ø,A,B	xxx	150	1 0	1 7m	950	9 5	175A	A1cm
112#	ZF15B	10	150	1 0	2 7m	330	9 6	150A	DO13
113	ZH150,A,B	xxx	150	1 0	1 7m	1.0k	9 5	175A	DO1
114	ZM150,A,B,D	xxxx	150	1 0	1.7m	1 0k	9 5	175	DO41
115	ZM150C	Ø	150	1 0	1 7m	1 0k	9 5	175	DO41
116	1N4860,A,B	xxx	150	1 2	1 7m	1 0k	11	175	DO29
117#	ZD150#	5	150	1 3	5 0	300	10	150J	DO13
118	ZM150Ø	10	150	1 3	5 0	300	10	150J	DO13
119#	ZU150	10	150	1 3	5 0	300	10	150J	A1bg
120#	ZY150	5	150	1 3	5 0	300	10	150J	A1bg
121	1N3817,A,B	xxx	150	1 5	2 5m	700	10	175S	C14Ø
122	1N4493	5	150	1 5	1 7m	700		175A	A196
123	JAN1N4493	10	150	1 5	1 7m	700	10	175A	A1v
124#	1S4150,A	xx	150	1 5	2 0m	300	10	150A	DO1
125	1 5JZ150,A,B,D	xxxx	150	1 5	25m	700	10	175	DO15
126	1 5JZ150C	Ø	150	1 5	25m	700	10	175	DO15
127	1 5R150,A,B	xxx	150	1 5	2 4m	900	9 5	175A	A52c
128	1 5Z150,A,B,D	xxxx	150	1 5	2 5m	700	10	175	DO27
129	1 5Z150C	Ø	150	1 5	2.5m	700	10	175	DO27
130	2R150,A,B	xxx	150	2 0	3 3m	900	9 5	175A	DO27
131	2VR150,A,B	xxx	150	2 0	3 3m	900			A3e
132	LMZ150,A,-20	xx*	150	2 0	3 5m	575		150A	A1kk
133	ZBC150	†	150	2 0 §	3 4m	625		150A	A1bc
134	1N4083	5	150	2 5	2 5m	1 0k	50	100	A1su
135	1N4083A	5	150	2 5	2 5m	1 0k	20	100	A1su
136	1N4098	5	150	3 0	5 0m	650		200S	A146
137	3R150,A,B	xxx	150	3 0	5 0m	500	9.5	175A	A1rw
138	3TZ150,A,B,D	xxxx	150	3 0	5 0m	500		175	A1ec
139	3TZ150C	Ø	150	3 0	5 0m	500		175	A1ec
140	3VR150,A,B	xxx	150	3.0	5.0m	500			A222
141	CZ4098	10	150	3.0	5 0m	600	140	175A	A196e
142#	FDZ15B	10	150	3 0 Ø	8 0m	110	9 6	150A	S303
143	M3Z150,A	xx	150	3.0	5 1m	560		150A	A1kk
144	MZ115	5	150	3 0	5 0m	650	10	175A	A146j
145	MZ215	10	150	3.0	5 0m	650	10	175A	A146j
146	MZ315	20	150	3.0	5.0m	650	10	175A	A146j
147	UZ115	5	150	3 0	5.0m	650	10	175A	A146f
148	UZ215	10	150	3 0	5 0m	650 Ø		175A	A146f
149	UZ315	20	150	3 0	5 0m	650 Ø		175A	A60
150	ZAC150,A,B	xxx	150	3 0	1.7m	1.0k		150C	A1ey
151	ZCC150	†	150	3 0 §	5.0m	625		150A	A1ey
152	3T150,A,B	xx*	150	3 5	5.0m	600			S11
153#	4GZ15B	10	150	4 0	17m	1.5k	9.5		S19q
154	1N4986	5	150	5.0	8.0m	330		175A	A146m
155	JAN1N4986	5	150	5 0	8 0m	330	10	175A	A248f
156♦	1N5383	20	150	5 0	8 0m			200A	A1ee
157▼	1N5383A	10	150	5 0	8 0m	330		200A	A1ee
158▼	1N5383B	5	150	5 0	8.0m	330		200A	A1ee
159#	5348	10Ø	150	5 0	3 0m	450		150J	A9h
160▼	CTZC150,A,B,DØ	xxxx	150	5 0 §	8.0m	330 Ø	9 5	175A	A1ey
161▼	CTZC150CØ	1	150	5 0 §	8.0m	330 Ø	9 5	175A	A1ey
162▼	CTZC150EØ	3	150	5 0 §	8 0m	330 Ø	9 5	175A	A1ey
163	HZ150	10	150	5.0	7 0m	144	9.0	165C	M221
164	MZ5115	5	150	5 0	8 0m	330	10		A60f
165	MZ5215	10	150	5 0	8 0m	330	10		A60f
166	MZ5315	20	150	5 0	8 0m	330	10		A60f
167▼	TZC150,A,B,D	xxxx	150	5 0 §	8.0m	330 Ø	9 5	175A	A1ey
168▼	TZC150C	1	150	5 0 §	8.0m	330 Ø	9 5	175A	A1ey
169▼	TZC150E	3	150	5 0 §	8 0m	330 Ø	9 5	175A	A1ey
170▼	UZ5115	5	150	5 0	8.0m	330	10	175A	A146m

SYMBOLS AND CODES EXPLAINED IN INTERPRETER

2. SILICON REFERENCE DIODES

IN ORDER OF (1) REF. VOLTAGE, (2) DISSIPATION, and (3) TYPE No.

LINE No	3 TYPE No	TOLERANCE 1 20 10 5 2 ± (%)	NOM. REF VOLT (V)	2 MAX. DISS @ 25°C (W)	TEST CUR. Izt (A)	MAX. DYN. IMP. (Ω)	TEMP COEFF Tc	MAX. TEMP (°C)	DWG. No.
1♦	UZ5215	10	150	5 0	8 0m	330	10	175A	A146m
2	UZ5315	20	150	5 0	8 0m	330 ∅	10	175A	A146m
3	ZC150	†	150	5 0 §	8 0m	330		150A	A1ey
4	UZ4115	5	150	8 0	8 0m	330		175A	A146m
5	UZ4215	10	150	8 0	8 0	330		175A	A146m
6	1N1424	5	150	10	10m	105 ∅	10	175C	S154
7	1N1812,A	xx	150	10	50m	82		175A	S11
8	1N1812B	20	150	10	50m	82			S11e
9	1N1812C,CA∅	xx	150	10 §	50m	82		175J	S19a
10	1N2012	10	150	10	50m	82	12	150A	S19a
11	1N2012A	5	150	10	50m	82	12	150A	S19a
12	1N2012C,CA∅	xx	150	10	50m	82	12	150A	S19a
13	1N3011,A,B	xxx	150	10	17m	175		175C	DO4⊘
14	JAN1N3011B,RB	5	150	10	17m	175	10	150C	DO4
15	1N3103,A	xx	150	10	3 0m	725	9.6	150A	S82
16	1N4290	20	150	10	17m	175	9 5	175C	S134
17	1N4290A	10	150	10	17m	175	9 5	175C	S134
18	1N4290B	5	150	10	17m	175	9 5	175C	S134
19	JAN1N4290B	5	150	10 §	17m	175	10	175S	S134a
20#	1S303	10	150	10	30m	80		150J	S19g
21#	1S5150,A	xx	150	10	50m	50	12	150C	DO4
22#	1S5150C∅	10	150	10	50m	50	12	150C	DO4
23#	1S6150	10	150	10	10m	200	10	150	DO4
24#	1S6150A	5	150	10	10m	180	10	150	DO4
25	10PZ150,A,B,D	xxxx	150	10	17m	175	9 5	175	DO4
26	10PZ150C	⊘	150	10	17m	175	9.5	175	DO4
27	10RZ150,A,B,D	xxxx	150	10	30m	240	12	155	DO4
28	10RZ150C	⊘	150	10	30m	240	12	155	DO4
29	AV118	10	150	10	50m	95		150A	S11
30	AV8150	∅2	150	10	50m	95		150A	S11
31#	GZ15B	10	150	10 ⊘	13m	69	9 6	150A	DO4
32#	PZ15B	10	150	10 ⊘	13m	69	9.6	150A	S95a
33#	4148	10∅	150	15	30m	80		150J	S87
34#	4248	10∅	150	15	30m	80		150J	S87
35#	RZ15B	xx	150	20 ⊘	26m	71	9 6	150A	DO5
36#	ZL150	10	150	25 ⊘	5 0	300	10	150J	M41
37#	ZX150	5	150	25 ⊘	5 0	300	10	150J	M41
38#	4348	10∅	150	30	30m	80		150J	S87
39#	4448△	10∅	150	30	30m	80		150J	S87
40#	1S1543	10	150	35	20m			150	T03
41	1N2843,A,B	xxx	150	50	85m	75	9 5	175S	C5a
42	JAN1N2843B,RB	5	150	50	85m	75	1.0	150C	C5a
43	1N3346	20	150	50	85m	7.5	9 5	175J	DO5
44	1N3346A	10	150	50	85m	7 5	9 5	175J	DO5
45	1N3346B	5	150	50	85m	7 5	9 5	175J	DO5
46	JAN1N3346B,RB	5	150	50	85m	75	10	150	DO5
47	50T150,A,B	xx*	150	50	85m	75	9.5		S19e
48	AV51150	5	150	50	85m	75	9.5	150C	C5a
49	AV2155	∅2	155	1 0	5 0m	800		150A	A19
50	AV8155	∅2	155	10	50m	95		150A	S11
51	AV51155	5	155	50	85m	75	9 5	150C	C5a
52	1/4M160Z,10,5	xxx	160	250m	400u	2 8k	9.7	175J	A1cy
53	1N743,A	xx	160	25	1 0m	970	9.6	175A	DO7
54	1N743B	20	160	25	1 0m	970			DO7
55	1N990,A,B	xxx	160	40	80m	1 7k	9.5	175S	DO7
56	JAN1N990B	5	160	40	80m	1 7k	11	175A	DO7
57	CZA160D,10,5	xxx	160	400m	250u	3.5k	9.5	175	M371
58	CZB160D,10,5	xxx	160	400m	400u	2 8k	9 5	175	M371
59	CZC160D,10,5	xxx	160	400m	800u	1 7k	9 5	175	M371
60	CZD160D,10,5	xxx	160	400m	250u	3 5k	9 5	175	M451
61	CZE160D,10,5	xxx	160	400m	800u	1 7k	9 5	175	M451
62	HM160,A,B	xxx	160	400m§	800u	1 7k		175A	A196c
63	M4Z160,A,-20	xx*	160	400m	800u	1 7k		150A	A1kk
64	MACZA160D,10,5	xxx	160	400m	250u	3 5k	9 5	175	M453
65	MACZB160D,10,5	xxx	160	400m	400u	2 8k	9.5	175	M453
66	MACZC160D,10,5	xxx	160	400m	800u	1 7k	9 5	175	M453
67	MACZD160D,10,5	xxx	160	400m	250u	3 5k	9 5	175	M453
68	MACZE160D,10,5	xxx	160	400m	800u	1.7k	9 5	175	M453
69	MBCZA160D,10,5	xxx	160	400m	250u	3 5k	9.5	175	M454
70	MBCZB160D,10,5	xxx	160	400m	400u	2 8k	9 5	175	M454
71	MBCZC160D,10,5	xxx	160	400m	800u	1 7k	9.5	175	M454
72	MBCZD160D,10,5	xxx	160	400m	250u	3 5k	9 5	175	M454
73	MBCZE160D,10,5	xxx	160	400m	800u	1 7k	9 5	175	M454
74	MCCZA160D,10,5	xxx	160	400m	250u	3 5k	9 5	175	M455
75	MCCZB160D,10,5	xxx	160	400m	400u	2 8k	9 5	175	M455
76	MCCZC160D,10,5	xxx	160	400m	800u	1 7k	9 5	175	M455
77	MCCZD160D,10,5	xxx	160	400m	250u	3 5k	9 5	175	M455
78	MCCZE160D,10,5	xxx	160	400m	800u	1 7k	9 5	175	M455
79	MDCZA160D,10,5	xxx	160	400m	250u	3 5k	9 5	175	M410

LINE No.	3 TYPE No.	TOLERANCE 1 20 10 5 2 ± (%)	NOM REF. VOLT. (V)	2 MAX. DISS. @ 25°C (W)	TEST CUR. Izt (A)	MAX. DYN. IMP. (Ω)	TEMP. COEFF Tc	MAX. TEMP (°C)	DWG. No.
80	MDCZB160D,10,5	xxx	160	400m	400u	2.8k	9.5	175	M410
81	MDCZC160D,10,5	xxx	160	400m	800u	1.7k	9.5	175	M410
82	MDCZD160D,10,5	xxx	160	400m	250u	3 5k	9.5	175	M410
83	MDCZE160D,10,5	xxx	160	400m	800u	1.7k	9.5	175	M410
84	MZC160A10	†	160	400m§	310u	3 4k	11	175J	M468
85	MZC160B10	§†	160	400m§	250u	5 5k		175J	M468
86	1N5277	20†	160	.50	80m			200A	DO7
87	1N5277A,B	§∅	160	50	.80m	1.7k	11	200A	DO7
88	MZ92-160	†	160	500m§	800m		9 2	150J	C103
89	S5277,A,B	xxx	160	500m	800u	1 7m	11	175	DO41
90	.7JZ160	†	160	750m	800u	1 7k	9 5	175	DO15
91	.7Z160,A,B,D	xxxx	160	750m	800u	1.7k	9 5	175	DO27
92	7Z160C	⊘	160	750m	800u	1.7k	9.5	175	DO27
93	.7ZM160,A,B,D	xxxx	160	750m	800u	1.7k	9 5	175	DO41
94	7ZM160C	⊘	160	750m	800u	1.7k	9 5	175	DO41
95	1N3708	20	160	750m§	750u	1.7k		175S	A1az
96	1N3708A	10	160	750m§	750u	1.7k		175S	A1az
97	1N3708B	5	160	750m§	750u	1.7k		175S	A1az
98	MMZ160,A,-20	xx*	160	750m	800u	1.7k		150A	A1kk
99	1A160M,A,B	xxx	160	1.0	1 6m	1.1k		75A	DO15
100	1E160Z,10,5	xxx	160	1.0	1.6m	1.1k	9 5	150A	A52g
101	1M160Z,10,5	xxx	160	1 0	1 6m	1.1k	9 5	175A	DO1
102	1N1800,A	xx	160	1.0	5 0m	700		175S	DO13
103	1N3049,A,B§	xxx	160	1 0	1 6m	1 1k		175A	A31a
104	JAN1N3049B	5	160	1.0	1.6m	1 1k	10	175A	A31c
105	1N4191	20	160	1.0	1 6m	1 1k	9.5	175	DO29
106	1N4191A	10	160	1 0	1 6m	1 1k	9 5	175	DO29
107	1N4191B	5	160	1.0	1.6m	1.1k	9 5	175	DO29
108	1N4356,A,B	xxx	160	1 0	1 6m	1.1k	9.5	300S	DO7
109▼	1N4433	20	160	1 0	1.6m	1 0k		175S	A266a
110	1N5592	20	160	1 0 §	1.6			200A	A196d
111	1N5592A	10	160	1.0 §	1.6m	1 1k		200A	A196d
112	1N5592B	5	160	1 0 §	1.6m	1 1k		200A	A196d
113	1N5662		160	1.0	1.0m		10	175A	DO13
114	1N5662A		160	1.0	1.0m		10	175A	DO13
115	1R160,A,B	xxx	160	1.0	1.6m	1.1k	9.5	175A	A52c
116#	1S3160	xx	160	1 0	2.0m	1.0k	10	150	A3
117	AV2160	∅2	160	1 0	5 0m	800		150A	A19
118	CZ160,A,B,D	xxxx	160	1 0	3 0m	1.1k	9 5	175	DO15
119	CZ160C	⊘	160	1.0	3.0m	1 1k	9.5	175	DO15
120	HW160,A,B	xxx	160	1.0	1 6m	1.1k		175	A196
121	JZ160,A,B,D	xxxx	160	1 0	1 6m	1 1k	9.5	175	DO15
122	JZ160C	⊘	160	1 0	1 6m	1 1k	9 5	175	DO15
123	LPM160,A,-20	xx*	160	1 0	1 6m	1.1k		150A	A1kk
124	TZ160,A,B,D	xxxx	160	1 0	3 0m	1.1k	9.5	175	DO27
125	TZ160C	⊘	160	1.0	3 0m	1 1k	9.5	175	DO27
126	UZ8116	5	160	1 0	1.6m	1 1k	10	175	A146h
127	UZ8216	10	160	1 0	1 6m	1.1k	10	175	A146h
128	VR160,A,B	xxx	160	1 0	1.6m	1 1k		125A	A1b
129	Z160,A,B,D	xxxx	160	1 0	1.6m	1.1k	9.5	175	DO27
130	Z160C	⊘	160	1.0	1.6m	1 1k	9.5	175	DO27
131	ZA160,A,B	xxx	160	1 0	1 6m	1.1k		150C	A1ew
132	ZB160	†	160	1 0 §	1 6m	1.1k		150A	A1bc
133	ZD160⊘,A,B	xxx	160	1 0	1 6m	1 0k	9 5	175A	A1cm
134	ZH160,A,B	xxx	160	1.0	1.6m	1.1k	9.5	175A	DO1
135	ZM160,A,B,D	xxxx	160	1.0	1.6m	1 1k	9.5	175	DO41
136	ZM160C	⊘	160	1.0	1 6m	1.1k	9.5	175	DO41
137#	ZD160#	5	160	1.3	5 0	350	10	150J	DO13
138#	ZY160	5	160	1.3	5 0	350	10	150J	A1bg
139	1N3818,A,B	xxx	160	1.5	2 3m	750	10	175S	C14⊘
140	1N4494	5	160	1 5	1 6m	1.0k		175A	A196
141	JAN1N4494	10	160	1.5	1.6m	1.0k	10	175A	A1v
142#	1S4160,A	xx	160	1.5	2.0m	395	10	150A	DO1
143	1 5JZ160,A,B,D	xxxx	160	1.5	2.3m	750	10	175	DO15
144	1.5JZ160C	⊘	160	1 5	2.3m	750	10	175	DO15
145	1 5R160,A,B	xxx	160	1 5	2.3m	1 0k	9.5	175A	A52c
146	1.5Z160,A,B,D	xxxx	160	1 5	2.3m	750	10	175	DO27
147	1.5Z160C	⊘	160	1.5	2.3m	750	10	175	DO27
148	2R160,A,B	xxx	160	2.0	3.1m	1.0k	9.5	175A	DO27
149	2VR160,A,B	xxx	160	2 0	3 1m	1.0k			A3e
150	LMZ160,A,-20	xx*	160	2 0	3 0m	650		150A	A1kk
151	ZBC160	†	160	2 0 §	3 2m	700		150A	A1bc
152	1N5100	5	160	3 0	4 0m	700		175A	A146j
153	3R160,A,B	xxx	160	3 0	4.8m	550	9.5	175A	A1rw
154	3TZ160,A,B,D	xxxx	160	3 0	5 0m	550		175	A1ec
155	3TZ160C	⊘	160	3.0	5.0m	550		175	A1ec
156	3VR160,A,B	xxx	160	3.0	4.8m	550			A222
157	CZ5100	10	160	3.0	4.0m	700	150	175A	A196e
158	M3Z160,A	xx	160	3.0	4.7m	750		150A	A1kk
159	MZ116	5	160	3 0	4 0m	700	10	175A	A146j
160	MZ216	10	160	3.0	4 0m	700	10	175A	A146j
161	MZ316	20	160	3.0	4.0m	700	10	175A	A146j
162	UZ116	5	160	3 0	4.0m	700 ∅		175A	A60
163	UZ216	10	160	3.0	4.0m	700 ∅		175A	A146f
164	UZ316	20	160	3.0	4 0m	700 ∅		175A	A60
165	ZAC160,A,B	xxx	160	3.0	1 6m	1.1k		150C	A1ey
166	ZCC160	†	160	3.0 §	4 0m	700		150A	A1ey
167	3T160,A,B	xx*	160	3.5	5 0m	700			S11
168	1N4987	5	160	5.0	8 0m	350		175A	A146m
169	JAN1N4987	5	160	5.0	8.0m	350	10	175A	A248f

SYMBOLS AND CODES EXPLAINED IN INTERPRETER

2. SILICON REFERENCE DIODES

IN ORDER OF (1) REF. VOLTAGE, (2) DISSIPATION, and (3) TYPE No.

LINE No	3 TYPE No	TOLERANCE 1 20 10 5 2 ± (%)	NOM. REF. VOLT. (V)	2 MAX. DISS. @ 25°C (W)	TEST CUR. Izt (A)	MAX. DYN. IMP. (Ω)	TEMP. COEFF Tc	MAX. TEMP (°C)	DWG. No.
1♦	1N5384	20	160	5 0	8 0m			200A	A1ee
2▼	1N5384A	10	160	5 0	8 0m	350		200A	A1ee
3▼	1N5384B	5	160	5 0	8 0m	350		200A	A1ee
4▼	CTZC160,A,B,DØ	xxxx	160	5 0 §	8 0m	350 Ø	9 5	175A	A1ey
5▼	CTZC160CØ	1	160	5 0 §	8 0m	350 Ø	9.5	175A	A1ey
6▼	CTZC160EØ	3	160	5 0 §	8 0m	350 Ø	9.5	175A	A1ey
7	MZ5116	5	160	5 0	8 0m	350	10		A60f
8	MZ5216	10	160	5.0	8.0m	350	10		A60f
9	MZ5316	20	160	5 0	8 0m	350	10		A60f
10▼	TZC160,A,B,D	xxxx	160	5 0 §	8 0m	350 Ø	9 5	175A	A1ey
11▼	TZC160C	1	160	5 0 §	8 0m	350 Ø	9 5	175A	A1ey
12▼	TZC160E	3	160	5.0 §	8 0m	350 Ø	9.5	175A	A1ey
13▼	UZ5116	5	160	5 0	8 0m	350	10	175A	A146m
14♦	UZ5216	10	160	5 0	8 0m	350	10	175A	A146m
15	UZ5316	20	160	5 0	8 0m	350 Ø	10	175A	A146m
16	ZC160	†	160	5 0 §	8 0m	350		150A	A1ey
17	UZ4116	5	160	8 0	8 0m	350		175A	A146m
18	UZ4216	10	160	8 0	8 0	350		175A	A146m
19	1N1813,A	xx	160	10	50m	93		175A	S11
20	1N1813B	20	160	10	50m	93			S11e
21	1N1813C,CAØ	xx	160	10 §	50m	93		175J	S19a
22	1N3012,A,B	xxx	160	10	16m	200		175C	DO4Ø
23	JAN1N3012B,RB	5	160	10	16m	200	10	150C	DO4
24	1N4291	20	160	10	16m	200	9 5	175C	S134
25	1N4291A	10	160	10	16m	200	9 5	175C	S134
26	1N4291B	5	160	10	16m	200	9 5	175C	S134
27	JAN1N4291B	5	160	10 §	16m	200	10	175S	S134a
28#	1S6160	10	160	10	10m	250	10	150	DO4
29#	1S6160A	5	160	10	10m	200	10	150	DO4
30	10PZ160,A,B,D	xxxx	160	10	16m	200	9 5	175	DO4
31	10PZ160C	Ø	160	10	16m	200	9 5	175	DO4
32	10RZ160,A,B,D	xxxx	160	10	30m	320	12	155	DO4
33	10RZ160C	Ø	160	10	30m	320	12	155	DO4
34	AV8160	Ø2	160	10	50m	95		150A	S11
35#	ZX160	5	160	25 Ø	5 0	350	10	150J	M41
36	1N2844,A,B	xxx	160	50	80m	80	9 5	175S	C5a
37	JAN1N2844B,RB	5	160	50	80m	80	1 0	150C	C5a
38	1N3347	20	160	50	80m	80	9 5	175J	DO5
39	1N3347A	10	160	50	80m	80	9 5	175J	DO5
40	1N3347B	5	160	50	80m	80	9 5	175J	DO5
41	JAN1N3347B,RB	5	160	50	80m	80	10	150	DO5
42	50T160,A,B	xx*	160	50	80m	80	9 5		S19e
43	AV51160	5	160	50	80m	80	9 5	150C	C5a
44	AV2165	Ø2	165	1 0	5 0m	800		150A	A19
45	AV8165	Ø2	165	10	50m	95		150A	S11
46#	4149	10Ø	165	15	25m	120		150J	S87
47#	4249	10Ø	165	15	25m	120		150J	S87
48#	5349	10Ø	165	15	3 0m	500		150J	A9h
49#	4349	10Ø	165	30	25m	120		150J	S87
50#	4449	10Ø	165	30	25m	120		150J	S87
51	AV51165	5	165	50	75m	85	9 5	150C	C5a
52	MZC170A10	†	170	400m§	290u	3 9k	11	175J	M468
53	MZC170B10	§†	170	400m§	250u	5 5k		175J	M468
54	1N5278	20†	170	50	.74m			200A	DO7
55	1N5278A,B	§Ø	170	50	.74m	1 9k	11	200A	DO7
56	MZ92-170	†	170	500m§	740m		9 2	150J	C103
57	S5278,A,B	xxx	170	500m	740u	1 9m	11	175	DO41
58	1N5663		170	1 0	1 0m		10	175A	DO13
59	1N5663A		170	1 0	1 0m		10	175A	DO13
60	AV2170	Ø2	170	1 0	5 0m	1 1k		150A	A19
61	UZ8117	5	170	1 0	1 5m	1 2k	10	175	A146h
62	UZ8217	10	170	1 0	1 5m	1 2k	10	175	A146h
63	1N5101	5	170	3 0	4 0m	750		175A	A146j
64	CZ5101	10	170	3 0	4 0m	750	160	175A	A196e
65	MZ117	5	170	3 0	4 0m	750	10	175A	A146j
66	MZ217	10	170	3 0	4.0m	750	10	175A	A146j
67	MZ317	20	170	3 0	4 0m	750	10	175A	A146j
68	UZ117	5	170	3 0	4 0m	750 Ø		175A	A60
69	UZ217	10	170	3 0	4.0m	750 Ø		175A	A146f
70	UZ317	20	170	3 0	4.0m	750 Ø		175A	A60
71	1N5127	5	170	5 0	8 0m	380		175A	A146m
72♦	1N5385	20	170	5 0	8 0m	-		200A	A1ee
73▼	1N5385A	10	170	5 0	8 0m	380		200A	A1ee
74▼	1N5385B	5	170	5 0	8 0m	380		200A	A1ee
75	MZ5117	5	170	5 0	8 0m	380	10		A60f
76	MZ5217	10	170	5 0	8 0m	380	10		A60f
77	MZ5317	20	170	5 0	8 0m	380	10		A60f
78▼	UZ5117	5	170	5 0	8 0m	380	10	175A	A146m
79♦	UZ5217	10	170	5 0	8 0m	380	10	175A	A146m
80	UZ5317	20	170	5 0	8 0m	380 Ø	10	175A	A146m
81	AV8170	Ø2	170	10	50m	150		150A	S11
82	AV51170	5	170	50	75m	85	9 5	150C	C5a
83	1/4A175,A,B	xxx	175	250m	360u	3 3k	9 5	175	DO7
84	1/4M175Z,10,5	xxx	175	250m	360u	3 3k	9 9	175J	A1cy
85	25N175	20	175	.25	36m	3 3k		250	DO7
86	CZA175D,10,5	xxx	175	400m	250u	4 0k	9 5	175	M371
87	CZB175D,10,5	xxx	175	400m	360u	3 3k	9 5	175	M371
88	CZC175D,10,5	xxx	175	400m	680u	2 1k	9 5	175	M371
89	CZD175D,10,5	xxx	175	400m	250u	4 0k	9 5	175	M451
90	CZE175D,10,5	xxx	175	400m	680u	2 1k	9 5	175	M451
91	MACZA175D,10,5	xxx	175	400m	250u	4 0k	9 5	175	M453
92	MACZB175D,10,5	xxx	175	400m	360u	3 3k	9 5	175	M453
93	MACZC175D,10,5	xxx	175	400m	680u	2 1k	9 5	175	M453
94	MACZD175D,10,5	xxx	175	400m	250u	4 0k	9 5	175	M453
95	MACZE175D,10,5	xxx	175	400m	680u	2 1k	9 5	175	M453
96	MBCZA175D,10,5	xxx	175	400m	250u	4 0k	9 5	175	M454
97	MBCZB175D,10,5	xxx	175	400m	360u	3 3k	9.5	175	M454
98	MBCZC175D,10,5	xxx	175	400m	680u	2 1k	9 5	175	M454
99	MBCZD175D,10,5	xxx	175	400m	250u	4.0k	9 5	175	M454
100	MBCZE175D,10,5	xxx	175	400m	680u	2 1k	9 5	175	M454
101	MCCZA175D,10,5	xxx	175	400m	250u	4 0k	9 5	175	M455
102	MCCZB175D,10,5	xxx	175	400m	360u	3 3k	9 5	175	M455
103	MCCZC175D,10,5	xxx	175	400m	680u	2 1k	9 5	175	M455
104	MCCZD175D,10,5	xxx	175	400m	250u	4 0k	9 5	175	M455
105	MCCZE175D,10,5	xxx	175	400m	680u	2 1k	9 5	175	M455
106	MDCZA175D,10,5	xxx	175	400m	250u	4 0k	9 5	175	M410
107	MDCZB175D,10,5	xxx	175	400m	360u	3 3k	9 5	175	M410
108	MDCZC175D,10,5	xxx	175	400m	680u	2 1k	9 5	175	M410
109	MDCZD175D,10,5	xxx	175	400m	250u	4 0k	9 5	175	M410
110	MDCZE175D,10,5	xxx	175	400m	680u	2 1k	9 5	175	M410
111	7JZ175	†	175	750m	750u	2 0k	9 5	175	DO15
112	7Z175,A,B,D	xxxx	175	750m	750u	2 0k	9 5	175	DO27
113	7Z175C	Ø	175	750m	750u	2 0k	9 5	175	DO27
114	7ZM175,A,B,D	xxxx	175	750m	750u	2 0k	9 5	175	DO41
115	7ZM175C	Ø	175	750m	750u	2 0k	9 5	175	DO41
116	1R175,A,B	xxx	175	1 0	1 4m	1 2k	9 5	175A	A52c
117	AV2175	Ø2	175	1 0	5 0m	1 1k		150A	A19
118	CZ175,A,B,D	xxxx	175	1 0	3 0m	1 2k	9 5	175	DO15
119	CZ175C	Ø	175	1 0	3 0m	1 2k	9 5	175	DO15
120	JZ175,A,B,D	xxxx	175	1 0	1 4m	1 2k	9 5	175	DO15
121	JZ175C	Ø	175	1 0	1 4m	1 2k	9 5	175	DO15
122	TC175A5C	5ΔØ	175	1 0	2 5m	1 1k	05	175A	A1su
123	TZ175,A,B,D	xxxx	175	1 0	3 0m	1 2k	9 5	175	DO27
124	TZ175C	Ø	175	1 0	3 0m	1 2k	9 5	175	DO27
125	Z175,A,B,D	xxxx	175	1 0	14m	1 2k	9 5	175	DO27
126	Z175C	Ø	175	1 0	14m	1 2k	9 5	175	DO27
127	ZM175,A,B,D	xxxx	175	1 0	1 4m	1 2k	9 5	175	DO41
128	ZM175C	Ø	175	1 0	1 4m	1 2k	9 5	175	DO41
129	1 5JZ175,A,B,D	xxxx	175	1 5	2 2m	800	10	175	DO15
130	1 5JZ175C	Ø	175	1 5	2 2m	800	10	175	DO15
131	1 5R175,A,B	xxx	175	1 5	2 1m	1 1k	9 5	175A	A52c
132	1 5Z175,A,B,D	xxxx	175	1 5	2 2m	800	10	175	DO27
133	1 5Z175C	Ø	175	1 5	2 2m	800	10	175	DO27
134	2R175,A,B	xxx	175	2 0	2 9m	1 1k	9 5	175A	DO27
135	1N4084	5	175	2 5	2 5m	1 1k	50	100	A1su
136	1N4084A	5	175	2 5	2 5m	1 1k	20	100	A1su
137	3R175,A,B	xxx	175	3 0	4 3m	600	9 5	175A	A1rw
138	3TZ175,A,B,D	xxxx	175	3 0	5 0m	600		175	A1ec
139	3TZ175C	Ø	175	3 0	5 0m	600		175	A1ec
140	1N3013,A,B	xxx	175	10	14m	250	9 5	175S	DO4
141	AV8175	Ø2	175	10	50m	150		150A	S11
142	1N3348	20	175	50	70m	85	9 5	175J	DO5
143	1N3348A	10	175	50	70m	85	9 5	175J	DO5
144	1N3348B	5	175	50	70m	85	9 5	175J	DO5
145	AV51175	5	175	50	68m	90	9 5	150C	C5a
146	1N2001,A,B	xx1	180	15	10m			150	C1
147	1N1947,A,B	xx1	180	20	.10m			150	DO7
148	1/4M180Z,10,5	xxx	180	250m	350u	3 5k	9 8	175J	A1cy
149	1N744,A	xx	180	25	1 0m	1 2k	9 6	175A	DO7
150	1N744B	20	180	25	1 0m	1 2k			DO7
151#	MZ18B	xx	180	250m	540m	2 4k	9 6	150A	DO7
152	1N991,A,B	xxx	180	40	68m	2 2k	9 5	175S	DO7
153	JAN1N991B	5	180	.40	.68m	2 2k	11	175A	DO7
154	CZA180D,10,5	xxx	180	400m	250u	4 5k	9 5	175	M371
155	CZB180D,10,5	xxx	180	400m	350u	3 5k	9 5	175	M371
156	CZC180D,10,5	xxx	180	400m	680u	2 2k	9 5	175	M371
157	CZD180D,10,5	xxx	180	400m	250u	4 5k	9 5	175	M451
158	CZE180D,10,5	xxx	180	400m	680u	2 2k	9 5	175	M451
159	HM180,A,B	xxx	180	400m§	680u	2 2k		175A	A196c
160	M4Z180,A,-20	xx*	180	400m	680u	2 2k		150A	A1kk
161	MACZA180D,10,5	xxx	180	400m	250u	4 5k	9 5	175	M453
162	MACZB180D,10,5	xxx	180	400m	350u	3 5k	9 5	175	M453
163	MACZC180D,10,5	xxx	180	400m	680u	2 2k	9 5	175	M453

SYMBOLS AND CODES EXPLAINED IN INTERPRETER

2. SILICON REFERENCE DIODES

IN ORDER OF (1) REF. VOLTAGE, (2) DISSIPATION, and (3) TYPE No.

LINE No	3 TYPE No.	TOLERANCE 20 10 5 2 ± (%)	1 NOM REF. VOLT (V)	2 MAX. DISS @ 25°C (W)	TEST CUR Izt (A)	MAX. DYN. IMP. (Ω)	TEMP. COEFF Tc	MAX. TEMP (°C)	DWG. No.
1	MACZD180D,10,5	xxx	180	400m	250u	4.5k	9 5	175	M453
2	MACZE180D,10,5	xxx	180	400m	680u	2 2k	9 5	175	M453
3	MBCZA180D,10,5	xxx	180	400m	250u	4 5k	9 5	175	M454
4	MBCZB180D,10,5	xxx	180	400m	350u	3 5k	9 5	175	M454
5	MBCZC180D,10,5	xxx	180	400m	680u	2 2k	9 5	175	M454
6	MBCZD180D,10,5	xxx	180	400m	250u	4 5k	9 5	175	M454
7	MBCZE180D,10,5	xxx	180	400m	680u	2 2k	9.5	175	M454
8	MCCZA180D,10,5	xxx	180	400m	250u	4 5k	9.5	175	M455
9	MCCZB180D,10,5	xxx	180	400m	350u	3 5k	9 5	175	M455
10	MCCZC180D,10,5	xxx	180	400m	680u	2 2k	9.5	175	M455
11	MCCZD180D,10,5	xxx	180	400m	250u	4 5k	9 5	175	M455
12	MCCZE180D,10,5	xxx	180	400m	680u	2 2k	9 5	175	M455
13	MDCZA180D,10,5	xxx	180	400m	250u	4 5k	9 5	175	M410
14	MDCZB180D,10,5	xxx	180	400m	350u	3.5k	9.5	175	M410
15	MDCZC180D,10,5	xxx	180	400m	680u	2 2k	9 5	175	M410
16	MDCZD180D,10,5	xxx	180	400m	250u	4 5k	9 5	175	M410
17	MDCZE180D,10,5	xxx	180	400m	680u	2 2k	9 5	175	M410
18	MZC180A10	†	180	400m§	280u	4 3k	11	175J	M468
19	MZC180B10	§†	180	400m§	250u	6 0k		175J	M468
20	1N3431	10	180	50	1.0m	2 0k	8 9	200A	P5
21	1N5279	20†	180	.50	68m			200A	DO7
22	1N5279A,B	§Ø	180	.50	.68m	2 2k	11	200A	DO7
23#	DZ18B	xx	180	500m§	1 1m	820	9 6	150A	A100
24	MZ92-180	†	180	500m§	680m		9 2	150J	C103
25	S5279,A,B	xxx	180	500m	680u	2.2m	11	175	DO41
26	7JZ180	†	180	750m	680u	2 2k	9 5	175	DO15
27	7Z180,A,B,D	xxxx	180	750m	680u	2 2k	9 5	175	DO27
28	7Z180C	☑	180	750m	680u	2 2k	9 5	175	DO27
29	7ZM180,A,B,D	xxxx	180	750m	680u	2.2k	9 5	175	DO41
30	7ZM180C	☑	180	750m	680u	2 2k	9 5	175	DO41
31	1N3709	20	180	750m§	680u	2 2k		175S	A1az
32	1N3709A	10	180	750m§	680u	2 2k		175S	A1az
33	1N3709B	5	180	750m§	680u	2 2k		175S	A1az
34	MMZ180,A,-20	xx*	180	750m	680u	2.2k		150A	A1kk
35	1A180M,A,B	xxx	180	1 0	1 4m	1 2k		75A	DO15
36	1E180Z,10,5	xxx	180	1 0	1 4m	1 2k	9.5	150A	A52g
37	1M180Z,10,5	xxx	180	1 0	1 4m	1 2k	9 5	175A	DO1
38▼	1N1801	10	180	1 0	5 0m	900		175S	DO13
39▼	1N1801A	5	180	1 0	5.0m	900		175S	DO13
40	1N3050,A,B	xxx	180	1 0	1 4m	1 2k		175A	A31a
41	JAN1N3050B	5	180	1 0	1 4m	1 2k	10	175A	A31c
42	1N3100,A	xx	180	1 0	3 0m	850	9 5	200C	A126
43	1N4192	20	180	1 0	1 4m	1 2k	9 5	175	DO29
44	1N4192A	10	180	1 0	1 4m	1 2k	9 5	175	DO29
45	1N4192B	5	180	1.0	1 4m	1 2k	9 5	175	DO29
46	1N4357,A,B	xxx	180	1 0	1.4m	1 2k	9 5	300S	DO7
47♦	1N4434	20	180	1.0	1 4m	1 1k		175S	A266a
48	1N4434A	10	180	1 0	1 4m	1 1k	9 5	175A	A1cm
49	1N4434B	5	180	1 0	1 4m	1 1k	9.5	175A	A1cm
50	1N5593	20	180	1 0 §	1 4			200A	A196d
51	1N5593A	10	180	1 0 §	1 4m	1 2k		200A	A196d
52	1N5593B	5	180	1 0 §	1 4m	1 2k		200A	A196d
53	1N5664		180	1.0	1 0m		10	175A	DO13
54	1N5664A		180	1 0	1 0m		10	175A	DO13
55	1R180,A,B	xxx	180	1 0	1 4m	1.2k	9 5	175A	A52c
56#	1S3180	xx	180	1 0	2 0m	1.2k	10	150	A3
57	AV2180	Ø2	180	1 0	5 0m	1 1k		150A	A19
58	CZ180,A,B,D	xxxx	180	1 0	3 0m	1 3k	9 5	175	DO15
59	CZ180C	☑	180	1 0	3 0m	1 3k	9 5	175	DO15
60#	EZ18B	10	180	1 0	2 2m	7 0k	9 6		A1em
61	HW180,A,B	xxx	180	1 0	1 4m	1.2k		175	A196
62	JZ180,A,B,D	xxxx	180	1 0	1.4m	1 2k	9 5	175	DO15
63	JZ180C	☑	180	1 0	1.4m	1 2k	9 5	175	DO15
64	LPM180,A,-20	xx*	180	1 0	1.4m	1 2k		150A	A1kk
65	TZ180,A,B,D	xxxx	180	1 0	1 4m	1 2k		150A	DO27
66	TZ180C	☑	180	1 0	1.4m	1 2k		150A	DO27
67	UZ8118	5	180	1 0	1 4m	1 3k	10	175	A146h
68	UZ8218	10	180	1 0	1 4m	1 3k	10	175	A146h
69	VR180,A,B	xxx	180	1 0	1 4m	1 2k		125A	A1b
70	Z180,A,B,D	xxxx	180	1.0	1 4m	1 2k	9 5	175	DO27
71	Z180C	☑	180	1 0	1 4m	1 2k	9 5	175	DO27
72	ZA180,A,B	xxx	180	1 0	1 4m	1 2k		150C	A1ew
73	ZB180	†	180	1 0 §	1 4m	1 2k		150A	A1bc
74	ZD180☑,A,B	xxx	180	1 0	1 4m	1 1k	9 5	175A	A1cm
75#	ZF18B	10	180	1 0	2 2m	410	9 6	150A	DO13
76	ZH180,A,B	xxx	180	1 0	1 4m	1 2k	9 5	175A	DO1
77	ZM180,A,B,D	xxxx	180	1 0	1 4m	1.2k	9.5	175	DO41
78	ZM180C	☑	180	1 0	1 4m	1 2k	9.5	175	DO41
79#	ZD180#	5	180	1 3	5.0	350	10	150J	DO13
80	ZM180☑	10	180	1 3	5.0	350	10	150J	DO13
81#	ZU180	10	180	1 3	5 0	350	10	150J	A1bg
82#	ZX180	5	180	1 3 §	5.0m	350	11	150J	M41
83#	ZY180	5	180	1 3	5 0	350	10	150J	A1bg
84	1N3819,A,B	xxx	180	1 5	2 1m	800	10	175S	C14☑
85	1N4495	5	180	1 5	1 4m	1.3k		175A	A196
86	JAN1N4495	10	180	1.5	1.4m	1.3k	10	175A	A1v
87#	1S4180,A	xx	180	1 5	2 0m	468	10	150A	DO1
88	1.5JZ180,A,B,D	xxxx	180	1 5	2 1m	800	10	175	DO15
89	1.5JZ180C	☑	180	1.5	2.1m	800	10	175	DO15
90	1 5R180,A,B	xxx	180	1.5	2.0m	1 1k	9 5	175A	A52c
91	1.5Z180,A,B,D	xxxx	180	1.5	2.1m	800	10	175	DO27
92	1 5Z180C	☑	180	1.5	2.1m	800	10	175	DO27
93	2R180,A,B	xxx	180	2.0	2.8m	1.1k	9 5	175A	DO27
94	2VR180,A,B	xxx	180	2.0	2 8m	1.1k			A3e
95	LMZ180,A,-20	xx*	180	2.0	3.0m	725		150A	A1kk
96	ZBC180	†	180	2.0 §	2.8m	850		150A	A1bc
97	1N5102	5	180	3.0	4.0m	850		175A	A146j
98	3R180,A,B	xxx	180	3.0	4.1m	600	9 5	175A	A1rw
99	3TZ180,A,B,D	xxxx	180	3.0	5.0m	600		175	A1ec
100	3TZ180C	☑	180	3.0	5.0m	600		175	A1ec
101	3VR180,A,B	xxx	180	3.0	4.1m	600			A222
102	CZ5102	10	180	3.0	4.0m	850	170	175A	A196e
103#	FDZ18B	10	180	3.0 ☑	6.5m	137	9.6	150A	S303
104	M3Z180,A	xx	180	3.0	4.3m	910		150A	A1kk
105	MZ118	5	180	3.0	4.0m	850	10	175A	A146j
106	MZ218	10	180	3.0	4.0m	850	10	175A	A146j
107	MZ318	20	180	3.0	4.0m	850	10	175A	A146j
108	UZ118	5	180	3.0	4 0m	850 Ø		175A	A60
109	UZ218	10	180	3.0	4 0m	850 Ø		175A	A146f
110	UZ318	20	180	3.0	4 0m	850 Ø		175A	A60
111	ZAC180,A,B	xxx	180	3.0	1 4m	1.2k		150C	A1ey
112	ZCC180	†	180	3.0 §	4 0m	850		150A	A1ey
113	3T180,A,B	xx*	180	3 5	5 0m	900			S11
114#	4GZ18B	10	180	4.0	14m	1.8k	9.5		S19g
115	1N4988	5	180	5.0	5.0m	430		175A	A146m
116	JAN1N4988	5	180	5.0	5.0m	450	11	175A	A248f
117♦	1N5386	20	180	5.0	5.0m			200A	A1ee
118▼	1N5386A	10	180	5 0	5 0m	430		200A	A1ee
119▼	1N5386B	5	180	5.0	5.0m	430		200A	A1ee
120#	5350	10Ø	180	5.0	3 0m	500		150J	A9h
121▼	CTZC180,A,B,DØ	xxxx	180	5 0 §	5.0m	430 Ø	9.5	175A	A1ey
122▼	CTZC180CØ	1	180	5.0 §	5.0m	430 Ø	9.5	175A	A1ey
123▼	CTZC180EØ	3	180	5 0 §	5.0m	430 Ø	9 5	175A	A1ey
124	MZ5118	5	180	5 0	5.0m	430	10		A60f
125	MZ5218	10	180	5 0	5 0m	430	10		A60f
126	MZ5318	20	180	5 0	5.0m	430	10		A60f
127▼	TZC180,A,B,D	xxxx	180	5 0 §	5.0m	430 Ø	9.5	175A	A1ey
128▼	TZC180C	1	180	5.0 §	5.0m	430 Ø	9 5	175A	A1ey
129▼	TZC180E	3	180	5 0 §	5.0m	430 Ø	9.5	175A	A1ey
130▼	UZ5118	5	180	5 0	5.0m	450	11	175A	A146m
131♦	UZ5218	10	180	5 0	5 0m	450	11	175A	A146m
132	UZ5318	20	180	5.0	5.0m	430 Ø	10	175A	A146m
133	ZC180	†	180	5 0 §	5 0m	430		150A	A1ey
134	UZ4118	5	180	8 0	5.0m	450		175A	A146m
135	UZ4218	10	180	8 0	5 0	450		175A	A146m
136	1N1814,A	xx	180	10	50m	115		175A	S11
137	1N1814B	20	180	10	50m	115			S11e
138	1N1814C,CAØ	xx	180	10 §	50m	115		175J	S19a
139	1N3014,A,B	xxx	180	10	14m	260		175C	DO4☑
140	JAN1N3014B,RB	5	180	10	14m	260	10	150C	DO4
141	1N3104,A	xx	180	10	3 0m	850	9.6	150A	S82
142	1N4292	20	180	10	14m	260	9 5	175C	S134
143	1N4292A	10	180	10	14m	260	9.5	175C	S134
144	1N4292B	5	180	10	14m	260	9.5	175C	S134
145	JAN1N4292B	5	180	10 §	14m	260	10	175S	S134a
146#	1S6180	10	180	10	10m	300	10	150	DO4
147#	1S6180A	5	180	10	10m	250	10	150	DO4
148	10PZ180,A,B,D	xxxx	180	10	14m	260	9.5	175	DO4
149	10PZ180C	☑	180	10	14m	260	9 5	175	DO4
150	10RZ180,A,B,D	xxxx	180	10	30m	400	12	155	DO4
151	10RZ180C	☑	180	10	30m	400	12	155	DO4
152	AV8180	Ø2	180	10	50m	150		150A	S11
153#	GZ18B	10	180	10 ☑	11m	82	9 6	150A	DO4
154#	PZ18B	10	180	10 ☑	11m	82	9 6	150A	S95a
155#	4150	10Ø	180	15	25m	120		150J	S87
156#	4250	10Ø	180	15	25m	120		150J	S87
157#	RZ18B	xx	180	20 ☑	22m	85	9 6	150A	DO5
158#	ZL180	10	180	25 ☑	5.0	350	10	150J	M41
159#	ZX200	5	180	25 ☑	5.0	350	10	150J	M41
160#	4350	10Ø	180	30	25m	120		150J	S87
161#	4450	10Ø	180	30	25m	120		150J	S87
162	1N2845,A,B	xxx	180	50	68m	90	9.5	175S	C5a
163	JAN1N2845B,RB	5	180	50	68m	90	1 0	150C	C5a
164	1N3349	20	180	50	68m	90	9 5	175J	DO5
165	1N3349A	10	180	50	68m	90	9.5	175J	DO5
166	1N3349B	5	180	50	68m	90	9.5	175J	DO5
167	JAN1N3349B,RB	5	180	50	68m	90	10	150	DO5
168	50T180,A,B	xx*	180	50	68m	90	9.5		S19e
169	AV51180	5	180	50	68m	90	9.5	150C	C5a
170	AV19	10	183	1 0	5.0m	1 1k		150A	A19
171	AV119	10	183	10	50m	150		150A	S11
172	AV2185	Ø2	185	10	50m	150		150A	S11
173	AV8185	Ø2	185	10	50m	150		150A	S11
174	AV51185	5	185	50	68m	90	9.5	150C	C5a
175	MZC190A10	†	190	400m§	260u	4 8k	11	175J	M468
176	MZC190B10	§†	190	400m§	250u	6 5k		175J	M468
177	1N5280	20†	190	.50	.66m			200A	DO7
178	1N5280A,B	§Ø	190	.50	66m	2 4k	11	200A	DO7
179	MZ92-190	†	190	500m§	660m		9.3	150J	C103
180	S5280,A,B	xxx	190	500m	660u	2 4m	11	175	DO41

SYMBOLS AND CODES EXPLAINED IN INTERPRETER

2. SILICON REFERENCE DIODES

IN ORDER OF (1) REF. VOLTAGE, (2) DISSIPATION, and (3) TYPE No.

LINE No	3 TYPE No.	TOLERANCE 1 20 10 5 2 ± (%)	NOM. REF VOLT (V)	2 MAX. DISS. @ 25°C (W)	TEST CUR. Izt (A)	MAX. DYN. IMP. (Ω)	TEMP. COEFF Tc	MAX. TEMP (°C)	DWG. No.
1	AV2190	Ø2	190	1 0	5 0m	1 1k		150A	A19
2	UZ8119	5	190	1 0	1 3m	1.4k	10	175	A146h
3	UZ8219	10	190	1 0	1.3m	1 4k	10	175	A146h
4	1N5103	5	190	3 0	4 0m	900		175A	A146j
5	CZ5103	10	190	3.0	4.0m	900	180	175A	A196e
6	MZ119	5	190	3 0	4 0m	900	10	175A	A146j
7	MZ219	10	190	3.0	4 0m	900	10	175A	A146j
8	MZ319	20	190	3 0	4 0m	900	10	175A	A146j
9	UZ119	5	190	3.0	4 0m	900 Ø		175A	A60
10	UZ219	10	190	3 0	4.0m	900 Ø		175A	A146f
11	UZ319	20	190	3 0	4.0m	900 Ø		175A	A60
12	1N5128	5	190	5 0	5.0m	450		175A	A146m
13♦	1N5387	20	190	5 0	5 0m			200A	A1ee
14▼	1N5387A	10	190	5 0	5 0m	450		200A	A1ee
15▼	1N5387B	5	190	5 0	5.0m	450		200A	A1ee
16	MZ5119	5	190	5 0	5 0m	450	10		A60f
17	MZ5219	10	190	5 0	5 0m	450	10		A60f
18	MZ5319	20	190	5.0	5.0m	450	10		A60f
19▼	UZ5119	5	190	5.0	5 0m	470	11	175A	A146m
20♦	UZ5219	10	190	5 0	5 0m	470	11	175A	A146m
21	UZ5319	20	190	5 0	5 0m	450 Ø	10	175A	A146m
22	AV8190	Ø2	190	10	50m	150		150A	S11
23	AV51190	5	190	50	65m	100	9 5	150C	C5a
24	AV2195	Ø2	195	1 0	5.0m	1 1k		150A	A19
25	AV8195	Ø2	195	10	50m	150		150A	S11
26	AV51195	5	195	50	65m	100	9 5	150C	C5a
27	1/4A200,A,B								
		xxx	200	250m	310u	4.3k	9 5	175	DO7
28	1/4M200Z,10,5								
		xxx	200	250m	310u	4.3k	10	175J	A1cy
29	25N200	20	200	.25	31m	4 3k		250	DO7
30	1N745,A	xx	200	.25	1 0m	1 4k	9 6	175A	DO7
31	1N745B	20	200	25	1 0m	1 4k			DO7
32	1N992,A,B	xxx	200	40	65m	2.5k	10	175S	DO7
33	JAN1N992B	5	200	40	65m	2.5k	11	175A	DO7
34	CZA200D,10,5								
		xxx	200	400m	250u	5 0k	10	175	M371
35	CZB200D,10,5								
		xxx	200	400m	310u	4 3k	10	175	M371
36	CZC200D,10,5								
		xxx	200	400m	650u	2 5k	10	175	M371
37	CZD200D,10,5								
		xxx	200	400m	250u	5.0k	10	175	M451
38	CZE200D,10,5								
		xxx	200	400m	650u	2 5k	10	175	M451
39	HM200,A,B	xxx	200	400m§	650u	2 5k		175A	A196c
40	M4Z200,A,-20								
		xx*	200	400m	650u	2 5k		150A	A1kk
41	MACZA200D,10,5								
		xxx	200	400m	250u	5 0k	10	175	M453
42	MACZB200D,10,5								
		xxx	200	400m	310u	4 3k	10	175	M453
43	MACZC200D,10,5								
		xxx	200	400m	650u	2 5k	10	175	M453
44	MACZD200D,10,5								
		xxx	200	400m	250u	5 0k	10	175	M453
45	MACZE200D,10,5								
		xxx	200	400m	650u	2 5k	10	175	M453
46	MBCZA200D,10,5								
		xxx	200	400m	250u	5 0k	10	175	M454
47	MBCZB200D,10,5								
		xxx	200	400m	310u	4 3k	10	175	M454
48	MBCZC200D,10,5								
		xxx	200	400m	650u	2 5k	10	175	M454
49	MBCZD200D,10,5								
		xxx	200	400m	250u	5 0k	10	175	M454
50	MBCZE200D,10,5								
		xxx	200	400m	650u	2 5k	10	175	M454
51	MCCZA200D,10,5								
		xxx	200	400m	250u	5 0k	10	175	M455
52	MCCZB200D,10,5								
		xxx	200	400m	310u	4 3k	10	175	M455
53	MCCZC200D,10,5								
		xxx	200	400m	650u	2 5k	10	175	M455
54	MCCZD200D,10,5								
		xxx	200	400m	250u	5 0k	10	175	M455
55	MCCZE200D,10,5								
		xxx	200	400m	650u	2 5k	10	175	M455
56	MDCZA200D,10,5								
		xxx	200	400m	250u	5 0k	10	175	M410
57	MDCZB200D,10,5								
		xxx	200	400m	310u	4 3k	10	175	M410
58	MDCZC200D,10,5								
		xxx	200	400m	650u	2 5k	10	175	M410
59	MDCZD200D,10,5								
		xxx	200	400m	250u	5 0k	10	175	M410
60	MDCZE200D,10,5								
		xxx	200	400m	650u	2.5k	10	175	M410
61	MZC200A10	†	200	400m§	250u	5.2k	11	175J	M468
62	MZC200B10	§†	200	400m§	250u	7.0k		175J	M468
63	1N3432	10	200	50	1 0m	2.2k	9 1	200A	P5
64	1N5281	20†	200	50	65m			200A	DO7
65	1N5281A,B	§Ø	200	50	65m	2 5k	11	200A	DO7
66	MZ92-200	†	200	500m§	650m		9 3	150J	C103
67	S5281,A,B	xxx	200	500m	650u	2 5m	11	175	DO41
68	7JZ200	†	200	750m	650u	2 5k	10	175	DO15
69	7Z200,A,B,D								
		xxxx	200	750m	650u	2 5k	10	175	DO27
70	7Z200C	∅	200	750m	650u	2 5k	10	175	DO27
71	7ZM200,A,B,D								
		xxxx	200	750m	650u	2 5k	10	175	DO41
72	7ZM200C	∅	200	750m	650u	2 5k	10	175	DO41
73	1N3710	20	200	750m§	650u	2 5k		175S	A1az
74	1N3710A	10	200	750m§	650u	2 5k		175S	A1az
75	1N3710B	5	200	750m§	650u	2 5k		175S	A1az
76	MMZ200,A,-20								
		xx*	200	750m	650u	2 5k		150A	A1kk
77	1A200M,A,B	xxx	200	1 0	1 2m	1 5k		75A	DO15
78	1E200Z,10,5								
		xxx	200	1 0	1 2m	1 5k	9 5	150A	A52g
79	1M200Z,10,5								
		xxx	200	1.0	1.2m	1 5k	10	175S	DO1
80	1N1802,A	xx	200	1 0	5 0m	1.1k		175S	DO13
81	1N3051,A,B	xxx	200	1.0	1 2m	1.5k		175A	A31a
82	JAN1N3051B	5	200	1 0	1 2m	1.5k	10	175A	A31c
83	1N4193	20	200	1 0	1 2m	1 5k	10	175	DO29
84	1N4193A	10	200	1 0	1 2m	1.5k	10	175	DO29
85	1N4193B	5	200	1.0	1 2m	1 5k	10	175	DO29
86	1N4358,A,B	xxx	200	1 0	1 2m	1 5k	9 5	300S	DO7
87♦	1N4435	20	200	1.0	1 2m	1 4k		175S	A266a
88	1N4435A	10	200	1 0	1 2m	1 4k	10	175A	A1cm
89	1N4435B	5	200	1 0	1 2m	1.4k	10	175A	A1cm
90	1N5594	20	200	1 0 §	1.2			200A	A196d
91	1N5594A	10	200	1 0 §	1 2m	1 5k		200A	A196d
92	1N5594B	5	200	1.0 §	1.2m	1.5k		200A	A196d
93	1N5665		200	1 0	1 0m		10	175A	DO13
94	1N5665A		200	1 0	1 0m		10	175A	DO13
95	1R200,A,B	xxx	200	1 0	1 2m	1.5k	10	175A	A52c
96#	1S3200	xx	200	1 0	2 0m	1.4k	10	150	A3
97	AV2200	Ø2	200	1 0	5.0m	1 1k		150A	A19
98	CZ200,A,B,D								
		xxxx	200	1 0	3 0m	1 5k	10	175	DO15
99	CZ200C	∅	200	1.0	3 0m	1.5k	10	175	DO15
100	HW200,A,B	xxx	200	1.0	1 2m	1.5k		175	A196
101	JZ200,A,B,D								
		xxxx	200	1.0	1 2m	1 5k	10	175	DO15
102	JZ200C	∅	200	1.0	1 2m	1 5k	10	175	DO15
103	LPM200,A,-20								
		xxx	200	1 0	1 2m	1 5k		150A	A1kk
104	TC200A5C	5△∅	200	1.0	2 5m	1 3k	05	175A	A1su
105	TZ200,A,B,D								
		xxxx	200	1 0	3 0m	1.5k	10	175	DO27
106	TZ200C	∅	200	1 0	3.0m	1.5k	10	175	DO27
107	UZ8120	5	200	1 0	1.2m	1 5k	10	175	A146h
108	UZ8220	10	200	1 0	1 2m	1.5k	10	175	A146h
109	VR200,A,B	xxx	200	1 0	1.2m	1 5k		125A	A1b
110	Z200,A,B,D	xxxx	200	1 0	1 2m	1 5k	10	175	DO27
111	Z200C	∅	200	1.0	1 2m	1 5k	10	175	DO27
112	ZA200,A,B	xxx	200	1 0	1 2m	1 5k		150C	A1ew
113	ZB200	†	200	1 0 §	1 2m	1 5k		150A	A1bc
114	ZD200∅,A,B	xxx	200	1 0	1 2m	1 4k	10	175A	A1cm
115	ZH200,A,B	xxx	200	1.0	1 2m	1 5k	10	175A	DO1
116	ZM200,A,B,D								
		xxxx	200	1 0	1 2m	1 5k	10	175	DO41
117	ZM200C	∅	200	1 0	1 2m	1.5k	10	175	DO41
118#	ZD200#	5	200	1 3	5 0	350	10	150J	DO13
119#	ZY200	5	200	1 3	5 0	350	10	150J	A1bg
120	1N3820,A,B	xxx	200	1 5	1 9m	1 0k	10	175S	C14∅
121	1N4496	5	200	1 5	1 2m	1.5k		175A	A196
122	JAN1N4496	10	200	1 5	1 2m	1 5k	10	175A	A1v
123#	1S4200,A	xx	200	1 5	2 0m	560	10	150A	DO1
124	1 5JZ200,A,B,D								
		xxxx	200	1 5	1 9m	1 0k	10	175	DO15
125	1 5JZ200C	∅	200	1 5	1 9m	1 0k	10	175	DO15
126	1.5R200,A,B								
		xxx	200	1 5	1 8m	1 2k	10	175A	A52c
127	1.5Z200,A,B,D								
		xxxx	200	1 5	1 9m	1 0k	10	175	DO27
128	1 5Z200C	∅	200	1 5	1 9m	1.0k	10	175	DO27
129	2R200,A,B	xxx	200	2 0	2 5m	1 2k	10	175A	DO2
130	2VR200,A,B	xxx	200	2 0	2 5m	1 2k			A3e
131	LMZ200,A,-20								
		xx*	200	2 0	2 5m	900		150A	A1kk
132	ZBC200	†	200	2 0 §	2 5m	950		150A	A1bc
133	1N4085	5	200	2 5	2 5m	1 3k	50	100	A1su
134	1N4085A	5	200	2 5	2 5m	1.3k	20	100	A1su
135	1N4504	10	200	3 0	4 0m	1 0k		175S	A146f
136	1N5104	5	200	3 0	4 0m	950		175A	A146j
137	3R200,A,B	xxx	200	3.0	3 7m	750	10	175A	A1rw
138	3TZ200,A,B,D								
		xxxx	200	3 0	5 0m	750		175	A1ec
139	3TZ200C	∅	200	3 0	5 0m	750		175	A1ec
140	3VR200,A,B	xxx	200	3 0	3 7m	750			A222
141	CZ5104	10	200	3 0	4 0m	950	190	175A	A196e
142	M3Z200,A	xx	200	3.0	3 9m	1 0k		150A	A1kk
143	MZ120	5	200	3 0	4 0m	950	10	175A	A146j
144	MZ220	10	200	3 0	4.0m	950	10	175A	A146j
145	MZ320	20	200	3 0	4 0m	950	10	175A	A146j
146	UZ120	5	200	3 0	4 0m	950	10	175A	A60
147	UZ220	10	200	3 0	4.0m	950	10	175A	A146f
148	UZ320	20	200	3 0	4 0m	950	10	175A	A60
149	ZAC200,A,B	xxx	200	3 0	1 2m	1 5k		150C	A1ey
150	ZCC200	†	200	3 0 §	4 0m	950		150A	A1ey
151	3T200,A,B	xx*	200	3.5	5 0m	1 1k			S11
152	1N4989	5	200	5 0	5 0m	480		175A	A146m
153	JAN1N4989	5	200	5 0	5 0m	500	11	175A	A248f
154♦	1N5388	20	200	5 0	5 0m			200A	A1ee
155▼	1N5388A	10	200	5 0	5 0m	480		200A	A1ee
156▼	1N5388B	5	200	5 0	5 0m	480		200A	A1ee
157#	5351	10Ø	200	5 0	3 0m	600		150J	A9h
158▼	CTZC200,A,B,DØ								
		xxxx	200	5 0 §	5 0m	480 Ø	10	175A	A1ey
159▼	CTZC200CØ	1	200	5 0 §	5.0m	480 Ø	10	175A	A1ey
160▼	CTZC200EØ	3	200	5 0 §	5.0m	480 Ø	10	175A	A1ey
161	MZ5120	5	200	5.0	5 0m	480	10		A60f
162	MZ5220	10	200	5.0	5 0m	480	10		A60f
163	MZ5320	20	200	5 0	5.0m	480	10		A60f
164▼	TZC200,A,B,D								
		xxxx	200	5 0 §	5 0m	480 Ø	10	175A	A1ey
165▼	TZC200C	1	200	5 0 §	5 0m	480 Ø	10	175A	A1ey
166▼	TZC200E	3	200	5 0 §	5.0m	480 Ø	10	175A	A1ey
167▼	UZ5120	5	200	5.0	5 0m	500	11	175A	A146m
168♦	UZ5220	10	200	5.0	5.0m	500	11	175A	A146m
169	UZ5320	20	200	5 0	5 0m	480 Ø	10	175A	A146m
170	ZC200#	†	200	5 0 §	5 0m	480		150A	A1ey
171	UZ4120	10	200	8 0	5 0m	500		175A	A146m
172	UZ4220	10	200	8 0	5 0	500		175A	A146m
173	1N1815,A	xx	200	10	50m	140		175A	S11
174	1N1815B	20	200	10	50m	140			S11e

SYMBOLS AND CODES EXPLAINED IN INTERPRETER

2. SILICON REFERENCE DIODES

IN ORDER OF (1) REF. VOLTAGE, (2) DISSIPATION, and (3) TYPE No.

LINE No	3 TYPE No	TOLERANCE 20 10 5 2 ± (%)	NOM. REF. VOLT. (V)	2 MAX. DISS @ 25°C (W)	TEST CUR. Izt (A)	MAX. DYN. IMP. (Ω)	TEMP. COEFF Tc	MAX. TEMP (°C)	DWG. No.
1	1N1815C,CAØ								
		xx	200	10 §	50m	140		175J	S19a
2	1N3015,A,B	xxx	200	10	12m	300		175C	DO4Ø
3	JAN1N3015B,RB								
		5	200	10	12m	300	10	150C	DO4
4	1N4293	20	200	10	12m	300	10	175C	S134
5	1N4293A	10	200	10	12m	300	10	175C	S134
6	1N4293B	5	200	10	12m	300	10	175C	S134
7	JAN1N4293B	5	200	10 §	12m	300	10	175S	S134a
8#	1S6200	10	200	10	10m	400	10	150	DO4
9#	1S6200A	5	200	10	10m	300	10	150	DO4
10	10PZ200,A,B,D								
		xxxx	200	10	12m	300	10	175	DO4
11	10PZ200C	Ø	200	10	12m	300	10	175	DO4
12	10RZ200,A,B,D								
		xxxx	200	10	30m	480	12	155	DO4
13	10RZ200C	Ø	200	10	30m	480	12	155	DO4
14	AV8200	Ø2	200	10	50m	150		150A	S11
15#	4151	10Ø	200	15	20m	180		150J	S87
16#	4251	10Ø	200	15	20m	180		150J	S87
17#	4351	10Ø	200	30	20m	180		150J	S87
18#	4451	10Ø	200	30	20m	180		150J	S87
19	1N2846,A,B	xxx	200	50	65m	100	10	175S	C5a
20	JAN1N2846B,RB								
		5	200	50	65m	100	10	150C	C5a
21	1N3350	20	200	50	65m	100	10	175J	DO5
22	1N3350A	10	200	50	65m	100	10	175J	DO5
23	1N3350B	5	200	50	65m	100	10	175J	DO5
24	JAN1N3350B,RB								
		5	200	50	65m	100	10	150	DO5
25	50T200,A,B	xx*	200	50	65m	100	9 5		S19e
26	AV51200	5	200	50	65m	100	10	150C	C5a
27	1N2002,A,B	xx1	220	15	.10m			150	C1
28▼	1N1948	10	220	200m	100u			150	DO7
29▼	1N1948A	5	220	200m	100u			150	DO7
30▼	1N1948B	1	220	200m	100u			150	DO7
31	7JZ220	†	220	750m	620u	2 8k	10	175	DO15
32	7Z220,A,B,D								
		xxxx	220	750m	620u	2 8k	10	175	DO27
33	7Z220C	Ø	220	750m	620u	2 8k	10	175	DO27
34	7ZM220,A,B,D								
		xxxx	220	750m	620u	2.8k	10	175	DO41
35	7ZM220C	Ø	220	750m	620u	2.8k	10	175	DO41
36	1N3101,A	xx	220	1 0	3.0m	1 0k	10	200C	A126
37	CZ220,A,B,D								
		xxxx	220	1 0	3 0m	1.7k	10	175	DO15
38	CZ220C	Ø	220	1.0	3 0m	1 7k	10	175	DO15
39	JZ220,A,B,D								
		xxxx	220	1 0	1.2m	1.5k	10	175	DO15
40	JZ220C	Ø	220	1 0	1 2m	1.5k	10	175	DO15
41	TZ220,A,B,D								
		xxxx	220	1 0	3 0m	1 7k	10	175	DO27
42	TZ220C	Ø	220	1 0	3 0m	1.7k	10	175	DO27
43	Z220,A,B,D	xxxx	220	1 0	1.2m	1.5k	10	175	DO27
44	Z220C	Ø	220	1 0	1 2m	1.5k	10	175	DO27
45	ZM220,A,B,D								
		xxxx	220	1 0	1.0m	1 5k	10	175	DO41
46	ZM220C	Ø	220	1 0	1 0m	1 5k	10	175	DO41
47	1 5JZ220,A,B,D								
		xxxx	220	1 5	1.8m	1 2k	11	175	DO15
48	1 5JZ220C	Ø	220	1.5	1 8m	1.2k	11	175	DO15
49	1 5Z220,A,B,D								
		xxxx	220	1 5	1.8m	1 2k	11	175	DO27
50	1 5Z220C	Ø	220	1 5	1 8m	1 2k	11	175	DO27
51	1N5105	5	220	3 0	3.0m	1.1k		175A	A146j
52	3TZ220,A,B,D								
		xxxx	220	3 0	5 0m	10k		175	A1ec
53	3TZ220C	Ø	220	3 0	5 0m	10k		175	A1ec
54	MZ122	5	220	3.0	3.0m	1.1k	10	175A	A146j
55	MZ222	10	220	3 0	3.0m	1 1k	10	175A	A146j
56	MZ322	20	220	3 0	3 0m	1.1k	10	175A	A146j
57	UZ122	5	220	3.0	3 0m	1.1kØ		175A	A60
58	UZ222	10	220	3 0	3.0m	1 1kØ		175A	A146f
59	UZ322	20	220	3 0	3 0m	1 1kØ		175A	A60
60	1N4990	5	220	5 0	5.0m	550		175A	A146m
61	JAN1N4990	5	220	5.0	5.0m	550	11	175A	A248f
62	MZ5122	5	220	5.0	5.0m	550	10		A60f
63	MZ5222	10	220	5.0	5.0m	550	10		A60f
64	MZ5322	20	220	5.0	5.0m	550	10		A60f
65▼	UZ5122	5	220	5 0	5 0m	550	11	175A	A146m
66♦	UZ5222	10	220	5 0	5.0m	550	11	175A	A146m
67	UZ5322	20	220	5.0	5.0m	550 Ø	10	175A	A146m
68	1N3105,A	xx	220	10	3 0m	1.0k	9.7	150A	S82
69	10PZ220,A,B,D								
		xxxx	220	10	10m	340	11	175	DO4
70	10PZ220C	Ø	220	10	10m	340	11	175	DO4
71	10RZ220,A,B,D								
		xxxx	220	10	30m	560	13	155	DO4
72	10RZ220C	Ø	220	10	30m	560	13	155	DO4
73	1N5106	5	240	3.0	3 0m	1.3k		175A	A146j
74	MZ124	5	240	3 0	3 0m	1 3k	11	175A	A146j
75	MZ224	10	240	3.0	3.0m	1 3k	11	175A	A146j
76	MZ324	20	240	3.0	3.0m	1 3k	11	175A	A146j
77	UZ124	5	240	3.0	3.0m	1.3kØ		175A	A60
78	UZ224	10	240	3.0	3.0m	1 3kØ		175A	A146f
79	UZ324	20	240	3.0	3 0m	1 3kØ		175A	A60
80	1N4991	5	240	5.0	5 0m	650		175A	A146m
81	JAN1N4991	5	240	5 0	5 0m	650	11	175A	A248f
82	MZ5124	5	240	5.0	5.0m	650	11		A60f
83	MZ5224	10	240	5.0	5.0m	650	11		A60f
84	MZ5324	20	240	5.0	5.0m	650	11		A60f
85▼	UZ5124	5	240	5.0	5 0m	650	11	175A	A146m
86♦	UZ5224	10	240	5.0	5.0m	650	11	175A	A146m
87	UZ5324	20	240	5.0	5.0m	650 Ø	11	175A	A146m
88	1N5107	5	260	3.0	3.0m	1.5k		175A	A146j
89	MZ126	5	260	3.0	3.0m	1 5k	11	175A	A146j
90	MZ226	10	260	3.0	3.0m	1 5k	11	175A	A146j
91	MZ326	20	260	3.0	3.0m	1 5k	11	175A	A146j
92	UZ126	5	260	3 0	3 0m	1 5kØ		175A	A60
93	UZ226	10	260	3 0	3.0m	1 5kØ		175A	A146f
94	UZ326	20	260	3.0	3 0m	1 5kØ		175A	A60
95	1N5129	5	260	5.0	5.0m	650		175A	A146m
96	MZ5126	5	260	5 0	5.0m	750	11		A60f
97	MZ5226	10	260	5.0	5.0m	750	11		A60f
98	MZ5326	20	260	5 0	5 0m	750	11		A60f
99▼	UZ5126	5	260	5 0	5 0m	750	12	175A	A146m
100♦	UZ5226	10	260	5.0	5.0m	750	12	175A	A146m
101	UZ5326	20	260	5.0	5.0m	750 Ø	11	175A	A146m
102	1N2003,A,B	xx1	270	150m	100u			150	C1
103▼	1N1949	10	270	200m	100u			150	DO7
104▼	1N1949A	5	270	200m	100u			150	DO7
105▼	1N1949B	1	270	200m	100u			150	DO7
106	1N5108	5	270	3.0	3 0m	1.6k		175A	A146j
107	MZ127	5	270	3.0	3.0m	1.6k	11	175A	A146j
108	MZ227	10	270	3.0	3 0m	1.6k	11	175A	A146j
109	MZ327	20	270	3.0	3.0m	1.6k	11	175A	A146j
110	1N4992	5	270	5.0	5.0m	800		175A	A146m
111	JAN1N4992	5	270	5.0	5.0m	800	12	175A	A248f
112	1N5109	5	280	3.0	3.0m	1.7k		175A	A146j
113	MZ128	5	280	3 0	3.0m	1.7k	11	175A	A146j
114	MZ228	10	280	3 0	3.0m	1.7k	11	175A	A146j
115	MZ328	20	280	3.0	3.0m	1.7k	11	175A	A146j
116	UZ128	5	280	3.0	3.0m	1.7kØ		175A	A60
117	UZ228	10	280	3 0	3.0m	1.7kØ		175A	A146f
118	UZ328	20	280	3.0	3.0m	1.7kØ		175A	A60
119	1N5130	5	280	5.0	4.0m	850		175A	A146m
120	MZ5128	5	280	5.0	4.0m	850	11		A60f
121	MZ5228	10	280	5.0	4.0m	850	11		A60f
122	MZ5328	20	280	5.0	4.0m	850	11		A60f
123▼	UZ5128	5	280	5.0	4 0m	850	12	175A	A146m
124♦	UZ5228	10	280	5.0	4.0m	850	12	175A	A146m
125	UZ5328	20	280	5.0	4.0m	850 Ø	11	175A	A146m
126	1N5110	5	300	3.0	3.0m	1.9k		175A	A146j
127	MZ130	5	300	3 0	3.0m	1 9k	11	175A	A146j
128	MZ230	10	300	3.0	3.0m	1 9k	11	175A	A146j
129	MZ330	20	300	3.0	3.0m	1.9k	11	175A	A146j
130	UZ130	5	300	3.0	3.0m	1.9kØ		175A	A60
131	UZ230	10	300	3.0	3 0m	1.9kØ		175A	A146f
132	UZ330	20	300	3.0	3.0m	1.9kØ		175A	A60
133	1N4993	5	300	5.0	4.0m	950		175A	A146m
134	JAN1N4993	5	300	5.0	4.0m	950	12	175A	A248f
135	MZ5130	5	300	5 0	4 0m	950	11		A60f
136	MZ5230	10	300	5.0	4.0m	950	11		A60f
137	MZ5330	20	300	5.0	4.0m	950	11		A60f
138▼	UZ5130	5	300	5.0	4.0m	950	12	175A	A146m
139♦	UZ5230	10	300	5.0	4 0m	950	12	175A	A146m
140	UZ5330	20	300	5.0	4 0m	950 Ø	11	175A	A146m
141	1N5111	5	320	3.0	2.0m	2.1k		175A	A146j
142	MZ132	5	320	3.0	2.0m	2 1k	11	175A	A146j
143	MZ232	10	320	3.0	2.0m	2 1k	11	175A	A146j
144	MZ332	20	320	3 0	2.0m	2.1k	11	175A	A146j
145	UZ132	5	320	3.0	2 0m	2.1kØ		175A	A60
146	UZ232	10	320	3 0	2 0m	2 1kØ		175A	A146f
147	UZ332	20	320	3.0	2.0m	2.1kØ		175A	A60
148	1N5131	5	320	5.0	4.0m	1.1k		175A	A146m
149	MZ5132	5	320	5.0	4.0m	1 1k	11		A60f
150	MZ5232	10	320	5.0	4.0m	1.1k	11		A60f
151	MZ5332	20	320	5 0	4.0m	1 1k	11		A60f
152▼	UZ5132	5	320	5 0	4 0m	1.1k	12	175A	A146m
153♦	UZ5232	10	320	5.0	4.0m	1.1k	12	175A	A146m
154	UZ5332	20	320	5 0	4 0m	1 1kØ	11	175A	A146m
155	1N2004,A,B	xx1	330	.15	.10m			150	C1
156▼	1N1950	10	330	200m	100u			150	DO7
157▼	1N1950A	5	330	200m	100u			150	DO7
158▼	1N1950B	1	330	200m	100u			150	DO7
159	1N5112	5	330	3.0	2.0m	2 2k		175A	A146j
160	MZ133	5	330	3.0	2.0m	2.2k	11	175A	A146j
161	MZ233	10	330	3 0	2.0m	2.2k	11	175A	A146j
162	MZ333	20	330	3 0	2.0m	2.2k	11	175A	A146j
163	1N4994	5	330	5 0	4.0m	1.1k		175A	A146m
164	JAN1N4994	5	330	5.0	4.0m	1.1k	12	175A	A248f
165	1N5113	5	340	3.0	2.0m	2.4k		175A	A146j
166	MZ134	5	340	3.0	2.0m	2.4k	11	175A	A146j
167	MZ234	10	340	3.0	2.0m	2.4k	11	175A	A146j
168	MZ334	20	340	3.0	2.0m	2 4k	11	175A	A146j
169	UZ134	5	340	3.0	2.0m	2 4kØ		175A	A60
170	UZ234	10	340	3 0	2.0m	2.4kØ		175A	A146f
171	UZ334	20	340	3.0	2.0m	2.4kØ		175A	A60
172	1N5132	5	340	5.0	4.0m	1.2k		175A	A146m
173	MZ5134	5	340	5 0	4.0m	1.2k	11		A60f
174	MZ5234	10	340	5 0	4.0m	1.2k	11		A60f
175	MZ5334	20	340	5.0	4.0m	1.2k	11		A60f
176▼	UZ5134	5	340	5.0	4.0m	1 2k	12	175A	A146m
177♦	UZ5234	10	340	5.0	4.0m	1.2k	12	175A	A146m
178	UZ5334	20	340	5.0	4.0m	1.2kØ	11	175A	A146m
179	1N5114	5	360	3.0	2.0m	2.7k		175A	A146j
180	MZ136	5	360	3.0	2.0m	2.7k	11	175A	A146j
181	MZ236	10	360	3.0	2.0m	2.7k	11	175A	A146j
182	MZ336	20	360	3.0	2.0m	2.7k	11	175A	A146j
183	UZ136	5	360	3.0	2.0m	2.7k		175A	A60
184	UZ236	10	360	3.0	2.0m	2 7k		175A	A146f
185	UZ336	20	360	3.0	2.0m	2.7k		175A	A60
186	1N4995	5	360	5.0	3 0m	1.4k		175A	A146m
187	JAN1N4995	5	360	5 0	3.0m	1.4k	12	175A	A248f
188	MZ5136	5	360	5.0	3.0m	1.4k	11		A60f
189	MZ5236	10	360	5.0	3.0m	1.4k	11		A60f
190	MZ5336	20	360	5.0	3.0m	1.4k	11		A60f
191▼	UZ5136	5	360	5.0	3.0m	1.4k	12	175A	A146m
192♦	UZ5236	10	360	5 0	3.0m	1.4k	12	175A	A146m
193	UZ5336	20	360	5.0	3 0m	1.4kØ	11	175A	A146m
194	1N5115	5	380	3.0	2.0m	3.0k		175A	A146j
195	MZ138	5	380	3.0	2.0m	3.0k	11	175A	A146j
196	MZ238	10	380	3.0	2.0m	3.0k	11	175A	A146j
197	MZ338	20	380	3 0	2 0m	3.0k	11	175A	A146j
198	UZ138	5	380	3.0	2.0m	3.0kØ		175A	A60
199	UZ238	10	380	3 0	2.0m	3.0k		175A	A146f
200	UZ338	20	380	3 0	2.0m	3.0kØ		175A	A60
201	1N5133	5	380	5.0	3.0m	1.5k		175A	A146m
202	MZ5138	5	380	5 0	3.0m	1.5k	11		A60f
203	MZ5238	10	380	5 0	3.0m	1.5k	11		A60f

SYMBOLS AND CODES EXPLAINED IN INTERPRETER

2. SILICON REFERENCE DIODES

IN ORDER OF (1) REF. VOLTAGE, (2) DISSIPATION, and (3) TYPE No.

LINE No	3 TYPE No.	TOLERANCE 20 10 5 2 ± (%)	1 NOM. REF. VOLT. (V)	2 MAX DISS. @ 25°C (W)	TEST CUR. Izt (A)	MAX. DYN. IMP. (Ω)	TEMP COEFF Tc	MAX. TEMP (°C)	DWG. No.
1	MZ5338	20	380	5 0	3 0m	1 5k	11		A60f
2▼	UZ5138	5	380	5 0	3 0m	1 5k	12	175A	A146m
3♦	UZ5238	10	380	5.0	3 0m	1 5k	12	175A	A146m
4	UZ5338	20	380	5 0	3 0m	1 5kØ	11	175A	A146m
5	1N2005,A,B	xx1	390	15	10m			150	C1
6	1N5116	5	390	3 0	2 0m	3 2k		175A	A146j
7	MZ139	5	390	3 0	2 0m	3.2k	11	175A	A146j
8	MZ239	10	390	3 0	2 0m	3.2k	11	175A	A146j
9	MZ339	20	390	3.0	2.0m	3.2k	11	175A	A146j
10	1N4996	5	390	5 0	3 0m	1.8k		175A	A146m
11	JAN1N4996	5	390	5 0	3 0m	1 8k	12	175A	A248f
12▼	1N1951	10	395	200m	100u			150	DO7
13▼	1N1951A	5	395	200m	100u			150	DO7
14▼	1N1951B	1	395	200m	100u			150	DO7
15	MC4B1,C1	5,10	400		10m				A2t
16	MC4B2,C2	5,10	400		10m				A1cy
17	1N5117	5	400	3.0	2 0m	3 5k		175A	A146j
18	MZ140	5	400	3 0	2 0m	3 5k	11	175A	A146j
19	MZ240	10	400	3 0	2 0m	3.5k	11	175A	A146j
20	MZ340	20	400	3 0	2 0m	3.5k	11	175A	A146j
21	UZ140	5	400	3 0	2 0m	3.5kØ		175A	A60
22	UZ240	10	400	3 0	2 0m	3.5kØ		175A	A146f
23	UZ340	20	400	3 0	2 0m	3.5kØ		175A	A60
24	1N5134	5	400	5 0	3 0m	1.8k		175A	A146m
25	MZ5140	5	400	5.0	3.0m	1 8k	11		A60f
26	MZ5240	10	400	5.0	3 0m	1.8k	11		A60f
27	MZ5340	20	400	5 0	3 0m	1 8k	11		A60f
28▼	UZ5140	5	400	5 0	3 0m	1.8k	12	175A	A146m
29♦	UZ5240	10	400	5 0	3 0m	1 8k	12	175A	A146m
30	UZ5340	20	400	5.0	3 0m	1 8kØ	11	175A	A146m
31	1N2006,A,B	xx1	470	15	10m			150	C1
32▼	1N1952	10	470	200m	100u			150	DO7
33▼	1N1952A	5	470	200m	100u			150	DO7
34▼	1N1952B	1	470	200m	100u			150	DO7
35	MC5B1,C1	5,10	500		10m				A2t
36	MC5B2,C2	5,10	500		10m				A1cy
37	1N2007,A,B	xx1	560	15	10m			150	C1
38▼	1N1953	10	565	200m	100u			150	DO7
39▼	1N1953A	5	565	200m	100u			150	DO7
40▼	1N1953B	1	565	200m	100u			150	DO7
41	MC6A1,B1,C1	△Ø§	600		100u				A2t
42	MC6A2,B2,C2	△Ø§	600		100u				A1cy
43	MC7A1,B1,C1	△Ø§	700		100u				A2t
44	MC7A2,B2,C2	△Ø§	700		100u				A1cy
45	LA700	6.5	750	75	.10m			100	A3p
46	LAA700	6.5	750	1 0	10m			100	A3p
47	LAB700	6.5	750	2 0	10m			100	A3q
48	LAC700	6 5	750	3 0	10m			100	A3q
49	MC8A1,B1	2,5	800		10m				A2t
50	MC8A2,B2	△Ø	800		100u				A1cy
51	MC9A1,B1	2,5	900		10m				A2t
52	MC9A2,B2	2,5	900		10m				A1cy
53	LAA900	5.5	950	1 0	10m			100	A3p
54	LAB900	5 5	950	2 0	100u			100	A3q
55	LAC900	5.5	950	3 0	10m			100	A3q
56	MC10A1,B1	2,5	1000		10m				A2t
57	MC10A2,B2	2,5	1000		10m				A1cy
58	LA1000		1000	75	10m			100	A3p
59	MC11A1,B1	2,5	1100		10m				A2t
60	MC11A2,B2	2,5	1100		10m				A1cy
61	MC12A1,B1	2,5	1200		10m				A2t
62	MC12A2,B2	2,5	1200		10m				A1cy
63	MC13A1,B1	2,5	1300		10m				A2t
64	MC13A2,B2	2,5	1300		10m				A1cy
65	MC14A1,B1	2,5	1400		10m				A2t
66	MC14A2,B2	△Ø	1 4k		100u				A1cy
67	MC15A1,B1	2,5	1500		10m				A2t
68	MC15A2,B2	2,5	1500		10m				A1cy
69#	BZY85C13	5 5	13 2k	25 §	19m	30	6 8	150J	DO7

SYMBOLS AND CODES EXPLAINED IN INTERPRETER

3. DIODES

IN ORDER OF (1) PIV, (2) MIN. FWD. CURRENT, (3) Vf, and (4) TYPE No.

LINE No	4 TYPE No	1 PIV (V)	MINIMUM FORWARD CURRENT 2 If (A)	3 @Vf (V)	MAXIMUM REVERSE CURRENT at 25°C Ir (A)	at Vr (V)	at SPECIFIED TEST CONDITIONS Ir (A)	at Vr (V)	TEMP. (°C)	CAPACITANCE CAP. (F)	at TEST VOLTS (V)	ABS. MAX. RATINGS AT 25°C DISS (W)	AV REC FWD. CUR. (A)	SURGE CUR. PEAK 1 Cy (A)	PULSE WIDTH (s)	MAX. TEMP. (°C)	DESCRIPTION MAT.	DWG. No.
1	ST24		1 0m	65	10u	2 0				100pØ	0.0					150	Si	DO7
2	A20G		10m	28 △	5 0u	20										75J	Ge	C105
3	A20H		10m	30 △	5 0u	20										75J	Ge	C105
4#	1S85		50m	90	5 0u	20				26p⊘	10					150	Si	DO7
5#	BA151△	1 0 †	05m$	60												75A	Si#	A60h
6#	AA120	1 0 †	8 5m	32												75A	GE*	C1e
7#	BA117	1 0	100m	1 1	1 0u	1 0											Si	A171f
8	DHD800	2 0	10m	43	2 0u	2 0				4 0p	0.0	150m				125	Si	A1ar
9#	RL42	2 0	2 5m	50													Ge	
10	SSD974	2 0	20m	1 0 △	2 0u	2 0				4.0p	0.0	150m				125	Si	A1cb
11#	BSA21	4 0	30m	1 0	200u	4 0				.60p⊘	0 0					150A	Si⊘	A1
12	1N4389	5 0 ⊘	2 0m	1 0	100u	5 0										150S	Si	DO7
13	1N133	5 0	3 0m	50	300u	5 0								50	1 0		Ge	DO7
14#	HG5085	5.0	100m	1 0			5 0u	1 0	45							90	Ge⊘	DO7
15	604C	5 5 ⊘	60m	1 0	10u	4 7	50u	4 7	150	20p	12	150m	100m			150A	Si	C3
16	CTP573	6 0	1 0m	30	15u	2 0							50m	50		85A	Ge	A1cs
17	CGD591	6 0	1 4m	3 0	4 0u	3 0						80m	60m			90	Ge⊘	A1bz
18	1N3287W	6 0 $	100m	1 0	15u	2 0											Ge⊘	DO7
19#	BA103	6 0	100m	1 0	1 0u	6 0				260p⊘	5.0	210m				150J	Si*	C1g
20	1N3565	6 0	2 0	2 0	25u	2 0						2 0	2	6 0	1 0	125S	Si	DO4
21	HB1	6 8	17m	1 0	5 0u	3 5						150m				100A	Si*	C1
22	1N200	6 8	50m	1 0	50u	6 8	5 0u	6 8	100A	50p	6 0	150m	85m			150A	Si*	C1
23	1N1839	6 8	50m	1 0									85m			150A	Si	C12a
24	606C	7 5 ⊘	35m	1 0	10u	6 8	50u	6 8	150	16p	12	150m	90m			150A	Si	C3
25#	DK21	8 0	10m	60	150u	8 0	85u	3 0	60	2 0p	3.0		30m			75J	Ge⊘	DO7
26	G766	8 0	100m	.85	15u	5 0											Ge⊘	DO7
27	CGD685	8 0	100m	1 0	20u	8 0											Ge⊘	DO7
28	G789	8 0	100m	1 0	4 0u	3 0											Ge⊘	DO7
29	G814	8 0	100m	1 0	15u	5 0											Ge⊘	DO7
30	G845	8 0	100m	1 0	20u	8 0											Ge⊘	DO7
31	1N308	8 0	300m	1 0	500u	8 0						80m	100m			90	Ge⊘	DO7
32	1N201	8 2	35m	1 0	50u	8 2	5 0u	8 2	100A	35p	6 0	150m	77m			150A	Si*	C1
33	1N379	8 2	35m	1 0	50u	8 2	5 0u	8 2	100A			150m	77m			150A	Si	DO7
34	BA114	9 0	20m	50									20m			90A	Si	DO7
35	1N527	10 $	1 0m⊘	30 △	50u	10								100	1 0	75A	Ge	A9k
36#	18P2	10	1 0m	1 0 △	50u		100u		125	40p	2 0		40m	.12	1 0	125A	Si	DO7
37#	AD10	10	1 0m	1 0	50u	10	100u	10	150	40p	2 0	150m	40m	30	10m	170A	Si⊘	DO7
38#	1S426	10	2 0m	1 0	100u	6 0							20m			75J	Ge⊘	A1dr
39#	BA180	10	4 0m	1 0								150m	50m	500m	1 0	175A	Si	A1an
40#	19P2	10	10m	1 0 △	50u		100u		125	40p	2 0		60m	.18	1.0	125A	Si	DO7
41#	AE10	10	10m	1 0	50u	10	100u	10	150	40p	2 0	150m	60m	.35	10m	170A	Si⊘	DO7
42#	BAW32E	10	10m	1 0	100n	10	20u	10	125	400n⊘	6 0		60m	120m	1 0	150S	Si	DO7
43	BA216	10	15m	1 0 △	1 5u	10							75m	1.0	1 0u	200J	Si	A134e
44	1N202	10	30m	1 0	50u	10	5 0u	10	100A	30p	6 0	150m	70m			150A	Si*	C1
45	1N380	10	30m	1 0	50u	10	5.0u	10	100A			150m	70m			150A	Si	DO7
46	1N1840	10	35m	1 0									77m			150A	Si	C12a
47#	CA10	10	50m	1 0	03u	5 0	50u	5 0	55A			150m	50m	1.0	10m	150A	Si*	C18d
48#	CB10△	10	50m	1.0	10u	5 0	2 0u	5.0	55A			150m	50m	1 0	10m	150A	Si*	C18d
49#	28J2	10	60m	1 3 △	10u	10	20u	10	125	40p	2 0		60m	12	1 0	125J	Si⊘	DO7
50	DIS1	10	100m⊘	99	1 0u	2 0							750m	16	1 0	100A	Si	A1cm
51	DIS1S	10	100m⊘	99	1 0u	2 0							750m	16	1.0	100A	Si	A1ck
52	G816	10	100m	1 0	12u	6 0											Ge⊘	DO7
53	PD122	10	100m⊘	1 0	1.0u	5 0						250m	60m			150	Si	A2
54#	CG94H	10	100m	1 4	15u	10				2 3p⊘	1 0	110m	80m			100	Ge⊘	DO7
55	1N107	10	150m	1 0	200u	10						80m	100m	.40	1.0	90	Ge⊘	DO7
56	PD123	10	250m⊘	1 0	1 0u	5 0						250m	60m			150	Si	A2
57	608C	11 ⊘	25m	1 0	10u	10	50u	10	150	12p	12	125m	75m			150A	Si	C3
58	STB567	12 △	10m	1 6								400m				175A	Si$#	A1aa
59	STB568	12 △	10m	2 3								400m				175A	Si$#	A1ae
60	STB569	12 △	10m	3.0								400m				175A	Si$#	A1an
61	1N5713	12	20m	1 0 △	100n	8 0	10u	15		1.2p⊘	0.0	250m				200S	Si	A1ac
62	1N203	12	23m	1 0	50u	12	5 0u	12	100A	28p	6 0	150m	63m			150A	Si*	C1
63	1N381	12	23m	1 0	50u	12	5 0u	12	100A			150m	63m			150A	Si	DO7
64	DR464	12	50m	1 0	100u	5 0							30m			85A	Ge	DO7
65▼#	1S2236	15			100n	4 0				14p⊘	4 0					150J	Si	DO35
66	DHD805	15	10m	43	2.0u	12				4 0p	0 0	150m				125	Si	A1ar
67#	SFD107	15	4 5m	1 0	22u	5 0	220u	10	25				20m	20	1.0	85S	Ge⊘	DO7
68	1N300	15	15m	1 0	1 0n	10	100n	10	100	5 0p	10	150m	65m	45	1 0	150	Si⊘	DO7
69	1N204	15	17m	1 0	50u	15	5 0u	15	100A	25p	6.0	150m	56m			150A	Si*	C1
70	1N382	15	17m	1 0	.50u	15	5 0u	15	100A			150m	56m			150A	Si	DO7
71	1N367	15	20m														Ge	M85
72♦#	AA112	15 †	20m$	1 3	40u	10				120f			24m	200m		100J	Ge⊘	A1tm
73▼#	AA112P	15 †	20m$	1 3	40u	10				120f			24m	200m		100J	Ge⊘	A1tm$
74▼#	AA138	15 †	20m$	1 3	50u	10							12m	50m		100J	Ge⊘	A1tn
75	1N1841	15	23m	1 0									63m			150A	Si	C12a
76	OA7	15	30m	56	1 9u	25	11u	25	60				50m	.40	1.0	60	Ge	C1ab
77	1N300A	15	30m	1 0	1 0n	10	100n	10	100	6 0p	10	150m	80m	.55	1 0	150	Si⊘	DO7
78	1N282	15	40m	1 0			20u	10	75			80m				100S	Ge	DO7
79	1N3564	15	40m	1 0			20u	10	75			80m				100S	Ge	DO7$
80	T22⊘	15	40m	1 0	20u	10						130m	50m	25	1 0	80A	Ge⊘	A9k
81	T27G	15	40m	1 0	100u	10						80m	40m			90A	Ge⊘	DO7
82	1N300B	15	50m	1 0	1 0n	10	100n	10	100	7 0p	10	150m	100m	60	1 0	150	Si⊘	DO7
83#	BA147	15	50m	1 0	10u	10						250m	100m			150J	Si	DO7
84	1N306	15	100m	80	2 0u	10	40u	10	70	3 0p	10	150m	150m	.50	1.0	70	Ge⊘	DO7
85#	BAY17	15	100m	1 0	10u	12	15u	12	100J	1.2p	10	400m	200m			150J	Si△	DO7
86	G790	15	100m	1 0	30u	10											Ge⊘	DO7
87	GD400	15 #	100m	1 0	3 0u	5.0						80m		.40	1 0	100S	Ge⊘	DO7
88	GD401	15 #	100m	1 0	5 0u	5 0						80m		.40	1 0	100S	Ge⊘	DO7
89	1N331	16	5 0m	1 0	01u	10										100A	Si*	DO7
90	1N5712	16	35m	1 0 △	100n	15	10u	20		1.2p⊘	0 0	250m				200S	Si	A1ac
91	610C	17 ⊘	12m	1 0	10u	15	50u	15	150	7.0p	12	125m	60m			150A	Si	C3
92	T22G	17 *	40m	1 0			20u	10	75	50p		80m		20	1.0	90	Ge⊘	DO7
93#	AA123	18	4 0m	1 0	1 5u	1 0				1 0p⊘						90	GE	DO7
94	1N138A	18	5 0m	1 0	.01u	10				15p	6 0	125m	35m			150A	Si*	C1
95	1N205	18	12m	1 0	10u	18	10u	18	100A	20p	6 0	150m	50m			150A	Si*	C1
96	1N383	18	12m	1 0	10u	18	10u	18	100A			150m	50m			150A	Si	DO7
97	1N138B	18	40m	1 0	01u	10	2 0u	10	125			150m	9 0m			150A	Si	C12a
98	G701	18 §	300m	1 0			30u	10	75	.50p	.10	80m					Ge⊘	DO7
99	G702	18 §	300m	1 0	4 0u	10				50p	10	80m					Ge⊘	DO7
100	G700	18 §	700m	1 0	10u	10				.50p	.10	80m					Ge⊘	DO7
101#	1S1658	20			500n	20				32p	4 0					150J	Si	DO7
102	6RS17DH4	20	6.0u	45 △	15u	20	20u	12	55A	225p				75m		85A	Se	M379a
103	6RS17DH6	20	6 0u	.45 △	15u	20	2 0u	12	55A	225p⊘				75m		85A	Se	M379
104	6RS1DH4	20	6 0u	80 △	8 0u	20	1 3u	12	55A	40p				25m		85A	Se	M379a
105	6RS1DH6	20	6 0u	80 △	8.0u	20	1 3u	12	55A	40p⊘				25m		85A	Se	M379
106#	AA116△	20	10m	18	90u	20	2 4u	1 5	25				30m	.20		75A	Ge	DO7
107	D16U3	20	10m	66 △	10u	20	2 0u	20	100A	4 0p⊘	0 0	200m				100J	Si	TO98*
108#	AA139	20	50m	10 △	100u	10						65m	200m			90J	Ge	DO7
109	1N4951	20	1 0m	85	10u	20						200m				100A	Si	L8
110#	GD12E	20	2 0m	1 0	10u	10				1 0p				.30	1 0		Ge	A99

SYMBOLS AND CODES EXPLAINED IN INTERPRETER

3. DIODES

IN ORDER OF (1) PIV, (2) MIN. FWD. CURRENT, (3) Vf, and (4) TYPE No.

LINE No	4 TYPE No	1 PIV (V)	MINIMUM FORWARD CURRENT 2 If (A)	3 @Vf (V)	MAXIMUM REVERSE CURRENT at 25°C Ir (A)	at Vr (V)	at SPECIFIED TEST CONDITIONS Ir (A)	at Vr (V)	TEMP. (°C)	CAPACITANCE CAP. (F)	at TEST VOLTS (V)	ABS. MAX. RATINGS AT 25°C DISS (W)	AV REC FWD. CUR. (A)	SURGE CUR. PEAK 1 Cy (A)	PULSE WIDTH (s)	MAX. TEMP. (°C)	DESCRIPTION MAT.	DWG. No.
1#	RL41G	20	2 0m	1 0	50u	5 0								400m			Ge	A1gj
2#	1T23	20	2 5m	1 0	50u	10							25m			70	Ge	A1sc
3#	1T23G	20	2 5m	1 0	50u	10							25m			70	Ge∅	
4	1N4502	20	3.0m	30	10u	6 0	80u	6 0	55			80m				85S	Ge	DO7
5	1N64A	20	3 0m	1 0	25u	10										90	Ge	DO7
6	S262	20	3 0m	1 0			150u	15	55					30			Si	DO7
7#	BA181	20	4 0m	1.0	5 0u	10						150m	50m	500m	1 0	175A	Si	A1an
8#	GD11E	20	5 0m	1 0	50u	10				1 0p				30	1 0		Ge	A99
9#	CG65H	20	6.0m	.80						1 0p	10		13m				Ge∅	DO7
10#	OA73	20	8 0m	50	100u	10				1 0p	0 0		50m	.40	1 0	75	Ge	A1gj
11#	AAY22	20	8 0m	1 0	100u	10											Ge	A1sq
12	DR435	20	10m	.37	10u	10							100m			85A	Ge	DO7
13#	BA116	20 $	10m	1 0	1 0u	20				6 0p	10					85A	Si△	C77a*
14#	BA164	20 ⊠	10m	1 0 △	2 0u	15	50u	15	65				75m			125	Si	DO7
15▼#	BA166	20	10m	1 4 △			7 5u	10	60A	4 0p⊠	0 0					150A	Si	DO35
16#	OA90	20	10m	1.5	450u	20	650u	20	60				10m	20	1 0	75A	Ge	A1cu
17#	CG74H	20	20m	1 7	20u	20						90m	25m			100	Ge∅	DO7
18	1N103	20	30m	1 0	750u	15											Ge	DO7
19#	CA20	20	35m	1 0	03u	10	50u	10	55A			150m	50m	1 0	10m	150A	Si	C18d
20#	CB20△	20	35m	1 0	10u	10	2 0u	10	55A			150m	50m	1 0	10m	150A	Si	C18d
21	T13	20	40m	1.0	2 0u	10						130m	85m			80A	Ge∅	A9k
22	T14	20	40m	1 0	5 0u	10						130m	85m			80A	Ge∅	A9k
23	T26G	20	40m	1 0	10u	10				50p		80m	70m	40	1 0	90A	Ge∅	DO7
24	1N776	20	50m	1 0	200u	10						80m	45m			90A	Ge∅	DO7
25#	BAY64	20	50m	1 0			50u	20	150A	2 5p	0 0		100m			175A	Si	L6
26	DR427	20	50m	1 0	500u	10										85A	Ge	DO7
27#	BA170	20	80m	1 0	3 0u	15						300m	150m			150J	Si△	DO7
28▼#	1S2186	20	100m	1 0	100n	15				2 0p⊠	10		100			150J	Si	A60g
29#	101B6	20 #	100m	1 0	1 0u	10						400m	100m			100	Si△	DO7
30#	MA53	20	100m	1 0 △	100m	15				2 0p⊠						100J	Si$△	A246
31	TI51	20	200m	1 0 △	1 0u	10						400m				100A	Si△	A31f
32	S02	20	200m	20 △	1 0u	20	200n	1 0	25A				200m	1 5	1 0	100A	Si	A60b
33	G844	20	300m	1.0	20u	6 0											Ge∅	DO7
34	1N5179	20	1 0	2 2m△	50n	20				20p⊠	0 0	400m				175A	Si	A1av
35	1N206	22	9 0m	1 0	10u	22	10u	22	100A	15p	6 0	150m	45m			150A	Si*	C1
36	1N384	22	9 0m	1 0	10u	22	10u	22	100A			150m	45m			150A	Si	DO7
37	1N1842	22	12m	1 0									50m			150A	Si	C12a
38	1N87	23	100u	25	30u	1 5							50m	.40	1 0	75A	Ge	A1gj
39	1N87A	23	10m	25	10u	1 5	650u	20	60A				50m	20	1 0	75A	Ge	DO7
40	1N929	23 *	20m	1 0	100u	25							250m	1 0	1 0		Si	DO7
41	T13G	23 *	40m	1 0	2 0u	10				50p		80m		.40	1 0	90	Ge∅	A1
42	T14G	23 *	40m	1 0	5.0u	10				50p		80m	70m	40	1 0	90A	Ge∅	A1
43	1N283	24	200m	1 0	20u	10						80m		50	1 0	90	Ge∅	DO7
44	1N3559	24	200m	1 0	20u	10				20p		80m		50	1 0	90	Ge∅	DO7$
45	DHD806	25	10m	43	2.0u	22				4 0p	0 0	150m				125	Si	A1ar
46	1N4950	25	1 0m	53			100u	25	150	3 0p	1.0	500m				175	Si	DO7
47	MA1704	25	1 0m	570m△	100n	20				3 0p⊠	0 0	700m	200m	4 0	1 0u	175J	Si$	DO34
48	DA1704	25	1 0m	68 △	100n	20				3 0p	0 0	70	200m	4 0	1 0u	175A	Si$	DO35
49#	MS50△	25	1 0m	1 0 △			110u	20		4 0p⊠	0 0		150m				Si	DO7
50#	GD72E3	25	2 0m	1 0	100u	10				1 0p			20m			60A	Ge⊠	F65
51#	GD72E4	25	2 0m	1 0	20u	10				1 0p			20m			60A	Ge⊠	F65
52#	GD72E5	25	2.0m	1 0	11u	10				1 0p			20m			60A	Ge	F65
53	1N64	25	3 0m	1 0	25u	10							50m	50		90A	Ge⊠	DO7
54#	RL41	25	3 0m	1 0	50u	10				70p			30m	15	1 0	60A	Ge⊠	A229
55#	AA121	25	4.0m	1 0	12u	2 0										90	GE	DO7
56	1N60S	25	5.0m	1 0	67u	10										80	Ge∅	DO7
57	1N87S	25	5 0m	1 0	220u	2 0							40m			75	Ge∅	DO7
58	1N87T	25	5 0m	1 0	30u	10	200u	25	25				30m			90	Ge∅	DO7
59	612C	25 ⊠	7 0m	1 0	100n	22	50u	22	150	5.0p	12	125m	50m			150A	Si	C3
60#	HG5079	25	10m	46	40u	12						80m	50m			90	Ge∅	DO7
61#	DK19	25	10m	48			40u	10	60	3 5p	75		110m			60A	Ge∅	DO7
62	1N40	25	12m	1 5	35u	10							225m	1 0m	1 0	75	Ge⊠	DO7§
63	1N353	25	20m	1 0	10u	200	20u	200	125				15m				Si	C12a
64	GD8E	25	20m	1 0	50u	5 0	1 0n	20	25	1 0p			60m	3 0m	1 0	60A	Ge⊠	A99
65	T21⊠	25	20m	1 0	50u	20				90p		130m	40m	20	1 0	80A	Ge∅	A86a
66	T21G	25	20m	1 0	50u	20				50p		80m	35m	18	1 0	90A	Ge∅	DO7
67	1N104	25	30m	1.0	750u	15											Ge	DO7
68	1N456	25 $	40m	1 0	25n	25	5 0u	25	150A	10p⊠		20	90m	.70	1 0	200	Si	A1bz
69	1N5426	25 ⊠	40m	1 0 △	1 0u	6 0				1 1p⊠	0 0	200m				150A	Si	
70#	1S1009	25	40m	1 0	50u	10				2 0p⊠	1 0		50m	50	1 0	90J	Ge∅	A1ce
71	PD131	25	40m	1 0	25n	25	5 0u	25	150			250m	40m			150	Si	A2
72	OA9	25	50m	55	25u	15	60u	15	60	3 0p	75		100m	80	1 0	75	Ge	C1ab
73#	BA147/25	25	50m	1 0 △	50u	25	15u	10	100A			210m	100m			150J	Si	DO7
74	1N84	25	60m	1 0	750u	15											Ge	DO7
75#	CG86H	25	100m	80 △	25u	25				2.4p⊠	1 0		90m				Ge∅	DO7
76	1N497	25 ∅	100m	1 0	20u	20						80m	80m			85	Ge†	DO7
77#	BAV17	25	100m	1 0	100n	20	15u	20	100J	1 5p	0 0	400m	200m	1 0	1 0	175J	Si$#	DO35
78#	BAX20	25	100m	1 0	10u	25				6.0p⊠	0 0					200J	Si$#	A60h
79	G815	25	100m	1 0	30u	20											Ge∅	DO7
80♦#	MGD50	25	100m	1 0 △	200u	25				500f⊠	10	120m	100m			90J	Ge∅	DO7
81	1N569	25	250m	.50	50u	10											Ge	DO7
82	BTS3600	25	25	1 0	250m	25				1 6p	14	250m	100m	400m	1 0	100A	Si	A1z
83	1N207	27	7 0m	1 0	10u	27	10u	27	100A	12p	6 0	150m	40m			150A	Si*	C1
84	1N385	27	7 0m	1 0	10u	27	10u	27	100A			150m	40m			150A	Si	DO7
85	RF400	30			30n	30	50u	30	150	10p	4 0	350m				175	Si	DO34
86	RF401	30			30n	30	50u	30	150	7 0p	4.0	350m				175	Si	DO34
87#	2OA79	30	100u	230m	350m	100m							35m	200m	1 0	60A	Gc	A1gj$
88	1N541	30	100u	300m	18u	10	150u	30	25				35m	200m	1 0	60	Ge	A1gj
89	1N542	30	100u	300m	18u	10	150u	30	25				35m	200m	1 0	60	Ge	A1gj
90#	17P2	30	1 0m	1 0 △	500n		100u		125	40p	2 0		40m	120m	1 0	125A	Si	DO7
91#	AD30	30	1 0m	1 0	50u	30	100u	30	150	40p	2 0	150m	40m	30	10m	170A	Si⊠	DO7
92	GPM2NA	30	1 2m	.46	3 0u	50	1 0m	30	25				15m				Ge	
93#	1P541	30 #	1 5m	1 0	2 8u△	1 5	18u△	10	25A				10m	.20	1 0	60A	Ge⊠	DO7
94#	1P542	30 #	1 5m	1 0	2 8u△	1 5	18u△	10	25A				10m	20	1 0	60A	Ge⊠	DO7$
95#	1S13	30	2 0m	1 0	18u	10							35m			60A	Ge⊠	A1gj
96#	1S15	30	2 0m	1 0	18u	10							35m			60A	Ge⊠	A1gj
97#	RL52	30	2 0m	1 0	50u	30	80u	1 5	25							60	Ge	DO7
98#	RL252	30	2 0m	1 0	50u	30	80u	1 5	25							60	Ge	DO7$
99	1N268	30	2 5m	1 0	850u	30							300m	30	1 0	85	Ge	A1sh
100#	1S75	30	2 5m	1 0	50u	10							25m	30	1 0	70J	Ge	A1ce
101	1N619	30	3.0m	1 0	08u	10	16u	10	100							150S	Si	A1
102	600C	30 ⊠	3 0m	1 0	8 0u	10	20u	10	100	2 5p	12	100m	25m			150A	Si	C3
103#	CV442	30	3 0m	1 0	1 0u	2 0k	30u						25m			75J	Ge⊠	A1bj
104	1N295X	30	4 5m	1 0	11u	2 0	385u	24	25	1 0p			20m			85	Ge∅	DO7
105	1N267	30	5 0m	1 0	50m	10											Ge	DO7
106	1N295S	30	6 5m	1 0	800u	30				1 0p						85	Ge∅	DO7
107	1N616	30	8 0m	1 0	18u	1 5	150u	30	25	1 0p			30m	40	1 0	75	Ge	A1sh
108	GPM1NA	30	8 0m	1 2	100u	100							23m				Ge	
109	GPM1NB	30	8 0m	1 2	100u	100							15m				Ge	
110#	AE30	30	10m	1 0	50u	30	100u	30	150	40p	2.0	150m	60m	.35	10m	170A	Si⊠	DO7

SYMBOLS AND CODES EXPLAINED IN INTERPRETER

3. DIODES

IN ORDER OF (1) PIV, (2) MIN. FWD. CURRENT, (3) Vf, and (4) TYPE No.

LINE No.	4 TYPE No.	1 PIV (V)	MINIMUM FORWARD CURRENT 2 If (A)	3 @Vf (V)	MAXIMUM REVERSE CURRENT at 25°C Ir (A)	at Vr (V)	at SPECIFIED TEST CONDITIONS Ir (A)	at Vr (V)	TEMP. (°C)	CAPACITANCE CAP. (F)	at TEST VOLTS (V)	ABS. MAX. RATINGS AT 25°C DISS. (W)	AV REC FWD. CUR. (A)	SURGE CUR PEAK 1 Cy (A)	PULSE WIDTH (s)	MAX. TEMP. (°C)	DESCRIPTION MAT.	DWG No.
1#	BA130	30 ∅	10m	1 0 △	10u	25	100u	25	100	2.0p∅	0.0	250m	50m	.50	1.0	125A	Si#	DO7
2#	HG1090	30	10m	1 0	500u	30										90	Ge∅	DO7
3#	MCS31	30	10m	1.0 △	100n	30	20u	30	100A	4 0p∅	1 0	250m	10m	2.0	10m	175S	Si△	DO7
4	DR365	30 *	10m	4 0	60u	6.0						80m					Ge∅	DO7
5#	AA143	30	15m	50	20u	20						80m	60m			85S	Ge∅	DO7
6	MC461	30	15m	1 0	.50u	25	30u	25	150			250m	100m			175A		A2c
7	MT461	30	15m	1 0	50u	25	30u	25	150			500m	100m			175A	Si	A60e
8	DR449	30 *	20m	1.0	500u	10											Ge∅	DO7
9	T24G	30	20m	1 0	300u	30				.50p		80m	45m	25	1.0	90A	Ge∅	A9k
10▼#	AA137	30 †	20m$	1.3	50u	10							12m	50m		100J	Ge∅	A1tn
11#	1S1420H	30	20m	2 7 △	6.0n	30				20p∅	1 0	200m	30m			175J	Si△	A1
12	MCPD527A	30	30m	1.0	100n	25	20u	25	100			250m				150A	Si	M411
13	MCPD527B	30	30m	1.0	100n	25	20u	25	100			500m				150A	Si	M411a
14	MCPD527C	30	30m	1 0	100n	25	20u	25	100			500m				150A	Si	M277d
15#	1S1010	30	40m	1.0	80u	10				2 0p∅	1 0		50m	.50	1.0	90J	Ge∅	A1ce
16	MC456	30	40m	1 0	25n	25	5 0u	25	150				250m	100m		175A	Si	A2c
17	MT456	30	40m	1 0	25n	25	5 0u	25	150				500m	100m		175A	Si	A60e
18#	1S940△	30	50m		5 0u	30	100u	30	100	8 0p∅	0 0			2.0		150S	Si	A9g
19#	MCS35	30	50m	1 0 △	100n	100	20u	100	100A	4 0p∅	1 0	250m	50m	2.0	10m	175S	Si△	DO7
20	1N5220	30 ∅	50m∅	1.1	.50u	15	50u	15	150	75p∅	0.0	250m				175S	Si	DO7
21	BA217	30	50m	1 5 △	50n	10				5 0p∅	0 0		75m	2 0	1.0u	200J	Si	A134e
22#	27J2	30	60m	1 3 △	10u	30	20u	30	125	.40p	2 0		60m	.12	1.0	125J	Si∅	DO7
23	1N309	30	100m	1 0	100u	20						80m	100m			90	Ge∅	A1sh
24	1N456A	30 *	100m	1 0	25n	25	5 0u	25	150A	5.0p	0 0	500m	200m	1 5	1.0	200	Si	A60p
25	1N461A	30 *	100m	1 0	50u	25	30u	25	150A			500m	200m			200	Si	A60p
26	1N911	30 #	100m∅	1.0	10u	10						80m	100m	50	1.0	90	Ge∅	DO7
27	1N4088	30	100m	1.0	200u	20	600u	35	25	55p	10	80m				90A	Ge	DO7
28#	102B6	30 #	100m	1 0	1 0u	20						400m	100m			100	Si△	DO7
29#	AC30	30	100m	1 0	50u	30	200u	30	150A	25p	2 0	150m	130m	1.0	10m	170A	Si*	DO7
30	CGD1029	30	100m	1 0	10u	10											Ge∅	DO7
31	G846	30	100m	1.0	10u	10											Ge∅	DO7
32#	HG5808	30	100m	1 0	500u	30										90	Ge∅	DO7
33	MC456A	30	100m	1 0	25n	25	5 0u	25	150			250m	150m			175A		A2c
34	MC461A	30	100m	1.0	50u	25	30u	25	150			250m	150m			175A		A2c
35	MT456A	30	100m	1 0	25n	25	5 0u	25	150			500m	150m			175A	Si	A60e
36	MT461A	30	100m	1 0	50u	25	30u	25	150			500m	150m			175A	Si	A60e
37	RF100	30	100m	1 0						1.0p∅	30	350m		500m	1 0	175	Si	DO34
38	RF101	30	100m	1 0						500f∅	30	350m		500m	1.0	175	Si	DO34
39#	SD16	30	100m	1.0	200u	20							60m	500m		90A	Ge∅	A1bw
40	T11	30	100m	1.0	20u	20							130m			80A	Ge∅	A9k
41	1N4828	30 ∅	100m	1 1 △	100n	20	25u	20	100A	35p∅	0.0	400m				200S	Si	DO35
42	1N4156	30 ∅	100m	1 8 △	50n	20	50u	20	150A	25p∅	0.0	400m				200S		DO35
43	MPD200	30 ∅	100m∅	1 8	03u	30				15p	0 0	400m				175A	Si#$	A1aa
44	1N4829	30 ∅	100m	1 9 △	100n	20	25u	20	100A	25p∅	0.0	400m				200S	Si	DO35
45	1N4157	30 ∅	100m	2 7 △	50n	20	50u	20	150A	20p∅	0.0	400m				200S		DO35
46	1N4830	30 ∅	100m	2 7 △	100n	20	25u	20	100A	20p∅	0 0	400m				200S	Si	DO35
47	G788	30	150m	1.0	5.0u	10											Ge∅	DO7
48#	AAY15	30	190m	.75	3.5u	10											Ge∅	C71
49	TI52	30 ∅	200m	1.0 △	1 0u	20						400m				100A	Si△	A31f
50	JAN1N5555	30	100	4.8 △	5 0u	30								200	8.3m	175A	Si	A220
51♦	JAN1N5610	30	100	4 8 △	5.0u	30								200	8 3m	175A	Si	A248k
52	1N330	32	3 0m	1.0	03u	20										100A	Si*	DO7
53	1N41	32 ∅	12m	1.5	35u	10								100m	1.0	75	Ge	M4$
54	1N273	32 △	100m	1.0	20u	20						80m	80m	.50	1 0	90A	Ge∅	DO7
55	1N279	32 △	100m	1 0	200u	20						80m	70m	.45	1 0	90A	Ge∅	DO7
56	1N208	33	5 5m	1.0	10u	33	10u	33	100A	10p	6.0	150m	35m			150A	Si*	C1
57	1N386	33	5 5m	1 0	10u	33	10u	33	100A			150m	35m			150A	Si	DO7
58	1N1843	33	7.0m	1 0									40m			150A	Si	C12a
59#	MA350	35	5 0m	80	3 0u	35				1 5p	0 0		100m			125J	Si*	A1gj
60#	1T26	35	8.0m	1.0	80u	10	300u	30	25A			50m	70m				Ge∅	A1sc
61#	1S1580	35	10m	870m	100n	30				4 0p∅	0.0		50m	500m	1 0	125J	Si$#	C101
62	1N461	35 *	15m	1 0	.50u	25	30u	25	150	6.0p	0.0	200m	60m	.70	1.0	200	Si△	A1bz
63	G159	35 *	25m	50	60u	20						80m	85m			90	Ge	DO7
64	1N3991	35	30m	55	4 0u	10	32u	2.0	70			80m				90S	Ge	DO7
65	1N144	35 *	100m	1.0	200u	20						130m	150m			80A	Ge∅	A1sh
66	1N452	35 *	100m	1.0	30u	30						130m				90A	Ge∅	DO7
67#	BAY86	35	100m	1 0	10u	30	10u	30	100	.70p	10	250m	250m	2.0	1.0m	150	Si△	DO7
68	GD404	35 #	100m	1 0	6.0u	10	10u	20	25			80m		.40	1.0	100S	Ge∅	DO7
69	GD405	35 #	100m	1.0	10u	10	40u	20	25			80m		.40	1.0	100S	Ge∅	DO7
70	A82	35 $	100m	1.2 △	100n	20	1.0u	20	60A	800f	20		100m			100J	Si#	A246
71#	BA178	35	.10	1.2	100n	20	1.0u	20	60A	1 8p∅	3.0		.10			60A	Si#	A246
72#	BA182	35	100m	1 2 △	100n	20	1.0u	20	60C	800f	20		100m			100J	Si#	M501
73#	1S1555	35	100m	1 4	500n	30				3.0p∅	0 0		100m	1 0	1.0	150J	Si$#	A60g
74	GD403	35 #	200m	1.0	10u	10						80m		.40	1 0	100S	Ge∅	DO7
75	CD1111	35	250m	1.0	5 0n	35	5.0u	35	150	3 0p	6.0	200m	200m	1.0	1 0	200	Si	A1ce
76	1N455	35 *	300m	1 0	30u	30						130m				90A	Ge∅	A1sh
77	1N3469	35	600m	1 0	15u	20	100u	35	25			80m	85m			90	Ge	DO7
78	1N3470	35	600m	1.0	30u	20	100u	35	25			80m	85m			90	Ge	DO7
79#	AAY53	36	2 0m	1 0 △	300u	40				1 5p	0.0						Ge∅	F3p
80#	AAY54	36	2.0m	1 0 △	300u	40				1 5p	0.0						Ge∅	F3p
81#	AAY55	36	2 0m	1 0 △	50u	40											Ge∅	F3p
82	HB3	36	2 7m	1 0	10u	20						150m				100A	Si*	C1
83	1N137A	36	3.0m	1 0	.03u	20				7 5p	6.0	125m	21m			150A	Si*	C1
84	1N36	36 §	4.0m	1 0	100u	25							16m			75	Ge	A1sh
85	1N137B	36	20m	1 0	03u	20	5.0u	20	125			150m	75m			150A	Si	C12a
86	1N482A	36	100m	1.0	25n	30	15u	30	150			250m	200m	2.0	10m	200A	Si	DO7
87	1N482B	36	100m	1 0	25n	30	5.0u	30	150			250m	200m	2.0	10m	200A	Si	DO7
88	1N482C	36	100m	1 0	5 0n	30											Si	A1bz
89	1N482	36	100m	1 1	.25u	30	30u	30	150			250m	100m	1.0	10m	200A	Si	DO7
90	PS603	36 §	200m	1 0	.25u	30	30u	30	150A			500m	200m			200	Si	DO14
91	PS604	36 §	200m	1 0	25n	30	15u	30	150A			500m	200m			200	Si	DO14
92	PS605	36 §	200m	1 0	25n	30	5.0u	30	150A			500m	200m			200	Si	DO14
93	614C	37 ∅	5 0m	1.0	100n	33	50u	33	150	3.5p	12	125m	35m			150A	Si	C3
94	1N209	39	4.5m	1 0	10u	39	10u	39	100A	8.0p	6 0	150m	30m			150A	Si*	C1
95	1N387	39	4 5m	1.0	.10u	39	10u	39	100A			150m	30m			150A	Si	DO7
96	1N435	40			300u	30							60m	1.0	1.0	75	Ge	M4§
97#	1S1650	40			5 0u	31				80p	25	400m				150J	Si	DO7
98#	1S1651	40			5 0u	31				80p	2.5	400m				150J	Si	DO7
99	1N295	40	375u		200u	10							35m	300	1.0	100A	Ge∅	DO7
100	1N295A	40	375u		200u	10				1.0p∅		80m	30m	300	1.0	90A	Ge∅	DO7
101	1N60	40	375u	50	200u	10				1.0p∅		80m	30m	300	1.0	100	Ge∅	DO7
102	SSD708	40 ∅	500u	1 0	20p	20	100n	20	150	4.0p∅	0.0	250m	75m	2.0	1.0u	175A	Si	DO7
103	MA1703	40	1 0m	590m△	50n	30	50	30	150A	2.0p∅	0.0	700m	200m	4.0	1.0u	175J	Si$	DO34
104	DA1703	40	1.0m	65 △	50n	30	50u	30	150	2.0p∅	0.0	700m	200m	4.0	1.0u	175A	Si$	DO35
105#	BA153	40	1.0m	90 △	1 0u	40	10u	40	70A	4.0p∅	0.0	200m	25m			100A	Si#	L8a*
106	1N81	40	3 0m	1 0	10u	10							40m			75	Ge	DO7
107	1N128	40 $	3 0m	1 0	10u	10	25u	10	25	1.0p	0 0	80m	30m	.50	1 0	90	Ge∅	A1bz
108	1N128A	40	3.0m	1 0	10u	10						80m	30m			90	Ge	A1bz
109	1N805	40	3 0m	1 0	100u	10											Ge	A1sh
110#	RL32G	40	3.0m	1.0	10u	10							.20				Ge	A1gj

SYMBOLS AND CODES EXPLAINED IN INTERPRETER

3. DIODES

IN ORDER OF (1) PIV, (2) MIN. FWD. CURRENT, (3) Vf, and (4) TYPE No.

LINE No	4 TYPE No.	1 PIV (V)	MINIMUM FORWARD CURRENT 2 If (A)	3 @Vf (V)	MAXIMUM REVERSE CURRENT at 25°C Ir (A)	at Vr (V)	at SPECIFIED TEST CONDITIONS Ir (A)	at Vr (V)	TEMP. (°C)	CAPACITANCE CAP (F)	at TEST VOLTS (V)	ABS. MAX. RATINGS AT 25°C DISS. (W)	AV REC FWD. CUR. (A)	SURGE CUR. PEAK 1 Cy (A)	PULSE WIDTH (s)	MAX. TEMP. (°C)	DESCRIPTION MAT.	DWG. No.
1#	RL232G	40	3 0m	1 0	10u	10				70p							Ge	A1gj$
2#	1S188	40	4.0m	1 0	75u	100							50m			75J	Ge∅	A1dr
3#	MD60	40	4.0m	1 0	80u	10							50m	500m	1 0	70J	Ge∅	DO7
4	1N60A	40	5 0m	1 0	60u	10				1 0p	0 0	80m	35m	50	1 0	100	Ge	DO7
5#	MD60A	40	8 0m	1 0	50u	10							50m	500m	1.0	70J	Ge∅	DO7
6	GSM51	40	10m	1 0	1.0u	30	100u	30	150			250m	50m			150	Si	A2j
7	MD04	40	10m	1 0	1 0u	30	100u	30	150			250m	50m			150A	Si	A2
8	PD132	40	10m	1 0	1 0u	30	40u	30	100			250m	30m			150	Si	A2
9#	OA79	40 ∅	10m	2 2	150u	30	300u	30	60				35m	.20	1 0	60	Ge∅	A1gj
10	1N56A	40	15m	1 0	300u	30							60m	1 0	1 0	90	Ge∅	DO7
11	1N287	40	20m	1 0	1 5m	50								50	1 0	90	Ge	DO7
12	1N447	40 ∅	25m	1 0	60u	30	20u	10	25			80m	60m			90	Ge	DO7
13	1N145	40	40m	1 0	100u	10						130m		70	1 0	80A	Ge∅	A1sh
14	1N449	40 ∅	50m	1 0	30u	30							60m			75	Ge	DO7
15#	HG5007	40 ∅	100m	80	5 0u	30				40p	10	80m	80m	45	1.0	90	Ge∅	DO7
16#	HG5008	40 ∅	100m	80	25u	30				.40p	10	80m	80m	45	1 0	90	Ge∅	DO7
17#	HG5009	40 ∅	100m	80	50u	30				40p	10	80m	80m	45	1.0	90	Ge∅	DO7
18	1N910	40 §	100m∅	1 0	10u	10						80m	100m	50	1.0	90	Ge∅	DO7
19#	103B6	40 §	100m	1 0	1 0u	30						400m	100m			100	Si△	DO7
20	GSM52	40	100m	1 0	25u	30	30u	30	150			250m	100m			150	Si	A2j
21	MC482A	40	100m	1 0	25n	30	15u	30	150			250m	150m			175A		A2a
22	MC482B	40	100m	1 0	25n	30	5 0u	30	150			250m	150m			175A		A2a
23#	MD134	40	100m	1 0	500n	35							100m	1 0	1.0	175J	Si*	DO7
24	MT482A	40	100m	1 0	25n	30	15u	30	150			500m	150m			175A	Si	A60e
25	MT482B	40	100m	1 0	25n	30	5 0u	30	150			500m	150m			175A	Si	A60e
26#	SD15∅	40	100m	1 0	200u	30							60m	500m		90A	Ge∅	A1bw
27	MC482	40	100m	1 1	25u	30	30u	30	150			250m	150m			175A		A2c
28	MT482	40	100m	1 1	25u	30	30u	30	150			500m	150m			175A	Si	A60e
29#	AAZ18△	40	200m	.75	75u	10											Ge∅	DO7
30	1N3466	40	200m	1 0	15u	30	100u	40	25			80m	75m			90	Ge∅	DO7
31	G157	40 *	200m	1 0	30u	30						80m	75m			90	Ge	DO7
32	TI53	40 ∅	200m	1 0 △	1 0u	30						400m				100A	Si△	A31f
33	WD001	40	200m	1 0	25u	30	30u	30	150			400m	200m			150	Si	DO7
34	WD002	40	200m	1 0	25n	30	15u	30	150			400m	200m			150	Si	DO7
35	WD003	40	200m	1 0	25n	30	5 0u	30	150			400m	200m			150	Si	DO7
36	JAN1N5556	40	100	4 8 △	5.0u	40								200	8.3m	175A	Si	A220
37♦	JAN1N5611	40	100	4 8 △	5.0u	40								200	8.3m	175A	Si	A248k
38#	1S442∅	43	10m	500m	20u	10	500u	40	25				100m	1 0		85J	Ge∅	DO7
39#	GD13E	45	2 0m	1 0	10u	10	1 0m	40	25				50m			70A	Ge∅	
40#	GD73E3	45	2 0m	1 0	100u	10	1 0m	40	25	1 0p			20m	10	1 0	60A	Ge∅	F65
41#	GD73E4	45	2 0m	1 0	20u	10	1 0m	40	25	1 0p			20m	100m	1.0	60A	Ge∅	F65
42#	GD73E5	45	2 0m	1 0	11u	10	1 0m	40	25	1 0p			20m	10	1.0	60A	Ge∅	F65
43#	RL31	45	2 0m	1 0	10u	10	1 0m	40	25	70p			50m	30	1 0	70A	Ge∅	A229
44#	RL32	45	2.0m	1 0	20u	10	1 0m	40	25	70p			50m	30	1.0	70A	Ge∅	A229
45#	RL246	45	2 0m	1 0	20u	10	1.0m	40	25	70p			50m	30	1 0	70A	Ge∅	A229
46#	CG64H	45	3 0m	1 0	200u	10	500u	10	60				30m			100J	Ge∅	A1bj
47#	GD4E	45	3 0m	1 0	33u	10	1.0m	40	25	1 0p			50m	30	1 0	60A	Ge∅	A99
48#	GD6E	45	3 0m	1 0	11u	10	1 0m	40	25	1 0p			50m	.30	1 0	60A	Ge	A99
49#	1S357	45	5 0m	1 0	80u	10	300u	30	25				50m	50	1 0	70J	Ge∅	A1ce
50#	1S441∅	45	5 0m	1 0	20u	10	500u	40	25				30m	200m		85J	Ge∅	DO7§
51#	GD1E	45	5 0m	1 0	11u	10	1 0m	40	25	1.0p			50m	.30	1.0	60A	Ge∅	A99
52#	GD1P	45	5 0m	1 0	10u	10	1 0m	40	25	500f			50m	500m	1 0	70A	Ge∅	A99
53#	GD1Q	45	5 0m	1.0	10u	10	1 0m	40	25	50p			40m	.50	1 0	50A	Ge∅	A99
54#	1S76	45	8 0m	1 0	80u	10	300u	30	25				50m	50	1 0	70J	Ge∅	A1ce
55#	GD5E	45	8 0m	1 0	50u	10	1 0m	40	25	1 0p			50m	300m	1 0	60A	Ge∅	A99
56♥#	2OA72	45	10m	1 4 △	130u	45							10m				Ge	A1gj
57#	OA72	45 #	10m	1 5	10u	45	4 0u	45	60				.10				Ge	A1gj
58#	2AA119	45	10m	2 2	150u	30	600u	30	60				35m			75S	Ge∅	DO7$
59#	AA119	45	10m	2 2	150u	30	300u	30	60				35m			75S	Ge∅	A3$
60♥#	AA119P	45	10m	2.2	150u	30							35m	200m		75S	Ge∅	A1tn$
61#	35P4	45	20m	1 0 △	10n	20				2 0p∅	0 0	50	75m	2 0	1.0u	200J	Si#	DO35
62	CGD462	45	150m	1 0	5 0u	10						80m	80m	45	1 0	90	Ge∅	A1bz
63	GD402	45 #	200m	1 0	5 0u	10	15u	30	25			80m		40	1.0	100S	Ge∅	DO7
64	1N51	46 *	2 5m	1 0	1 6m	50						80m	30m	30	1 0	85	Ge∅	DO7
65	DR434	46 *	10m	36	10u	10						80m	100m				Ge∅	DO7
66	1N56	46 *	15m	1 0	300u	30							60m	1 0	1 0	90	Ge	DO7
67	1N139	46 *	20m	1 0	1 5m	50						130m	70m	.50	1 0	80A	Ge∅	A1sh
68	DR863	46 *	20m	1 0			500u	30	90								Si	DO7
69	T1G	46 *	20m	1 0	1 5m	50						80m	60m			90A	Ge∅	
70	1N498	46 *	100m	1 0	25u	40						80m	80m			85	Ge†	DO7
71	DR848	46 *	100m	1 5	25n	20	2 0u	20	100								Si	DO7
72	1N210	47	3 5m	1 0	10u	47	10u	47	100A	6.0p	6 0	150m	27m			150A	Si*	C1
73	1N388	47	3 5m	1 0	10u	47	10u	47	100A			150m	27m			150A	Si	DO7
74	1N1844	47	4 5m	1 0									30m			150A	Si	C12a
75	1N1625	48	100u	1.0	15u	26							250u	5 0m	1.0	100A	Se	M204a
76	JAN1N5557	49	100	4 8 △	5 0u	49								200	8 3m	175A	Si	A220
77♦	JAN1N5612	49	100	4 8 △	5 0u	49								200	8.3m	175A	Si	A248k
78	1N4455	50 ∅	10m∅	52	10u	20	2 0u	20	75			200m				200S	Si	DO7
79	D16U4	50	10m	66 △	10u	50	2 0u	50	100A	4 0p∅	0 0	200m				100J	Si	TO98*
80	1N1625A	50	.20m	1 0	15u	26	18u	26	100J				50m	10m	1 0	25A	Se∅	DO7
81#	SD12B	50	25m	30	10u	1 0	1 0m	30	25				22m				Ge	A201
82	1N4952	50	1 0m	85	10u	50						200m				100A	Si	L8
83#	BA179	50	1 0m	90 △	1 0u	50	10u	50	70A	4 0p∅	0 0	20	25m			100A	Si#	L8a*
84#	16P2	50	1 0m	1 0 △	50u		100u		125	40p	2 0		40m	.12	1.0	125A	Si	DO7
85#	AD50	50	1 0m	1 0	50u	50	100u	50	150	40p	2 0	150m	40m	30	10m	170A	Si∅	DO7
86#	SD12E	50	1 2m	46	3 0u	1.5	1 0m	30	25				15m				Ge	M235
87	1N1627	50	1 5m	1 0	27u	26	33u	26	100J				3.8m	80m	1 0	25A	Se∅	DO7
88	1N636	50 §	2 5m	1 0	10u	10						80m	30m	30	1 0	85	Ge∅	DO7
89	601C	50 ∅	3 0m	1 0	.04u	10	40u	10	150	2 5p	12	100m	25m			150A	Si	C3
90	1N568	50	5 0m	32	100u	5 0											Ge	DO7
91#	MA351	50	5 0m	80									.10			125J	Si*	A1gj
92	1N52A	50	5 0m	1 0	100u	50							50m	40	1 0	75	Ge∅	DO7
93	1N54	50	5 0m	1 0	7 0u	10	100u	50	25				50m	50	1.0	90	Ge	DO7
94	1N54A	50	5 0m	1 0	7 0u	10	100u	50	25				50m	50	1 0	90	Ge∅	DO7
95#	1N60C	50	5.0m	1 0	67u	10				1 0p	0 0	80m	50m			75	Ge	DO7
96	1N266	50 §	5.0m	1 0	30m	30											Ge	DO7
97	1N897	50	5.0m	1 0	10u	40	20u	100				250m				150	Si△	A2
98	1N1635	50	5.0m	1 0	108u	26	135u	26	100J				13m	25	1.0	25A	Se∅	DO7
99	1N4092	50	5.0m	1 0	1 0u	10	5 0u	20	70	10p	6 0	250m				150S	Si	DO7
100	1N4093	50	5.0m	1 0	1.0u	10	5 0u	20	70	10p	6 0	250m				150S	Si	DO7
101	PD101	50	5.0m	1 0	1 0u	10	25u	10	100	2.0p	10	250m		2 0	1.0u	150	Si△	A2
102	1N35	50	7.5m	1 0	10u	10				90p			23m	.10	1 0	75	Ge∅	DO7$
103#	SD12M	50	8 0m	1 2	100u	10			25				15m				Ge	M235
104	DR385	50	10m	37	10u	10							100m			85A	Ge	DO7
105	1N949	50	10m	39	10u	10	50u	10	55			80m		.50	1 0	90A	Ge	A1bz
106#	AAY30	50	10m	45	15u	10	150u	30	55	1 0p∅	1 0	44m	110m	.50	20m	75	Ge	DO7
107#	HG5078	50	10m	46	50u	25						80m	60m			90	Ge∅	DO7
108	1N3626	50	10m	50	1 0m	50	15u	5.0	50			80m				90S	Ge	DO7
109#	AE50	50	10m	1 0	50u	50	100u	50	150	40p	2 0	150m	60m	35	10m	170A	Si∅	DO7
110#	BAW32D	50	10m	1 0	100n	50	20u	50	125	400n∅	6 0		60m	120m	1 0	150S	Si	DO7

SYMBOLS AND CODES EXPLAINED IN INTERPRETER

3. DIODES

IN ORDER OF (1) PIV, (2) MIN. FWD. CURRENT, (3) Vf, and (4) TYPE No.

LINE No.	4 TYPE No	1 PIV (V)	MINIMUM FORWARD CURRENT 2 If (A)	3 @Vf (V)	MAXIMUM REVERSE CURRENT at 25°C Ir (A)	at Vr (V)	at SPECIFIED TEST CONDITIONS Ir (A)	at Vr (V)	TEMP. (°C)	CAPACITANCE CAP (F)	at TEST VOLTS (V)	ABS. MAX. RATINGS AT 25°C DISS. (W)	AV REC FWD. CUR. (A)	SURGE CUR. PEAK 1 Cy (A)	PULSE WIDTH (s)	MAX. TEMP. (°C)	DESCRIPTION MAT.	DWG. No
1	1N1640	50	11m	1 0	240u	26	300u	26	100J				28m	55	1.0	25A	Se∅	M204
2#	1S189	50	15m	1 0	300u	30							40m	.50		75	Ge∅	A1ce
3#	CA50	50	15m	1 0	03u	10	50u	10	55A			150m	35m	1.0	10m	150A	Si*	C18d
4#	CB50	50	15m	1 0	10u	10	2 0u	10	55A			150m	35m	1.0	10m	150A	Si*	C18d
5#	SD56	50	15m	1 0	300u	30							40m	500m		90A	Ge∅	A1bw
6	A23	50	20m	1 0 △	50n	25	25u	50	150J	3.0p∅	0 0		75m	2.0	1 0u	200J	Si△	A134b
7	PD102	50	20m	1 0	500n	10	25u	10	100	2.0p	10	250m		2.0	1.0u	150	Si△	A2
8	T18	50	20m	1 0	125u	50				90p		130m	40m	.20	1 0	80A	Ge∅	A86a
9	T20∅	50	20m	1 0	30u	10	500u	50	25	90p		130m	40m	.20	1 0	80A	Ge∅	A86a
10	T23G	50	20m	1 0	200u	50				.50p		80m	45m	.25	1.0	90A	Ge∅	DO7
11#	OA200	50	30m	90	10u	50	5 0u	50	100				50m			125A	Si	A3
12	1N312	50	30m	1 0	50u	50						80m	70m			90	Ge∅	A1sh
13#	SFD180	50	30m	1.1 △	100n	50	10u	50	125A	4.0p∅	0 0		80m			200S	Si#	DO7
14#	SFD184	50	40m	1 0	1 0u	50							75m	500m	1.0	175S	Si#	DO7
15#	1S941△	50	50m		5 0u	50	100u	50	100	8.0p∅	0.0			2.0		150S	Si	A9g
16	1N108	50	50m	1 0	200u	50										90	Ge	DO7
17	AM308A	50	50m	1 0	1 0n	40	3 0u	40	150	6 0p∅	0.0	500m	100m	60	1 0	200S	Si△	DO7
18#	BA147/50	50 †	50m	1 0 △	.50u	50	15u	10	100J			210m	100m			150J	Si	DO7
19#	BAY78	50	50m	1 0	50n	50				2 5p∅	0.0	.20	10	1 0	1.0u	80C	Si$#	Z3§
20#	HS1010	50	50m	1 0	05u	50	5 0u	50	100	5 0p	10	200m	90m			200	Si*	DO7
21#	HS1011	50	50m	1 0	10u	50				5 0p	10	200m	90m			200	Si*	DO7
22#	HS1012	50	50m	1 0	.20u	50				5.0p	10	200m	90m			200	Si*	DO7
23#	TF19	50	50m	1 0 △	100n	50	10u	50	100	3.5p	0 0		100m	2.0		150S	Si	A60b
24#	TF17	50	50m	1 2 △	100n	50	10u	50	100	3.5p	0.0		100m	2.0		150S	Si	A60b
25	BA218	50	50m	1.5 △	50n	25				5.0p∅	0.0		75m	2.0	1 0u	200J	Si	A134e
26#	26J2	50	60m	1 3 △	10u	50	20u	50	125	40p	2 0		60m	12	1 0	125J	Si∅	DO7
27	1N898	50	100m	1 0	50u	40	20u	40	100			250m				150	Si△	A2
28#	1S180	50	100m	1 0	3 0u	50											Si△	DO7
29#	104B6	50 *	100m	1 0	1.0u	40						400m	100m			100	Si△	DO7
30#	AC50△	50	100m	1 0	50u	50	200u	50	150A	20p	2 0	150m	130m	1.0	10m	170A	Si*	DO7
31	AM305A	50	100m	1 0	1 0n	40	3.0u	40	150	6 0p∅	0.0	500m	150m	1.0	1 0	200S	Si△	DO7
32#	BA136	50	10	1.0 △	100n	30				2 0p∅	30	.16				125J	Si$△	DO7
33▼#	BA177	50	100m	1 0 △	100n	30				4 5p	2.0	250m	100m			150J	Si△	A1tn
34#	BAX21	50	100m	1 0	100n	50				6 0p∅	0.0		250m	3.0	1 0u	200J	Si$#	A60h
35#	HS1004	50	100m	1 0	05u	50	5 0u	50	100	5.0p	10	200m	120m			200	Si*	DO7
36#	HS1005	50	100m	1 0	10u	50				5.0p	10	200m	120m			200	Si*	DO7
37#	HS1006	50	100m	1 0	20u	50				5.0p	10	200m	120m			200	Si*	DO7
38	PD103	50	100m	1 0	50u	10	25u	10	100	2.0p	10	250m		2.0	1 0u	150	Si△	A2
39#	SD13	50	100m	1 0	200u	30							60m	500m		90A	Ge∅	A1bw
40#	SD14	50	100m	1 0	200u	40							60m	500m		90A	Ge∅	A1bw
41	TMD41	50	100m	1 0	25u	50	30u	50	100			100m	75m			150A	Si△	A1gm
42#	BA108	50	100m	1 1	1 0u	50				35p∅	5 0	210m				150J	Si*	C1g
43#	BAY44	50	100m	1 1	10u	50				10p	5 0						Si	A171f
44#	TF18	50	150m	1 5 △	250m	50	10	50	100	4.0p	0 0		150m	2.0		150S	Si△	A60b
45#	1S130△	50	200m	1 0 △			50u	50	100				200m	1.5	1 0	100A	Si	A1
46	AM302A	50	200m	1 0	1 0n	40	3.0u	40	150	6 0p∅	0 0	500m	300m	2.0	1.0	200S	Si△	DO7
47	GD407	50 #	200m	1 0	10u	10	30u	30	25			80m		.40	1.0	100S	Ge∅	DO7
48	TI54	50 ∅	200m	1 0 △	1 0u	40						400m				100A	Si△	A31f
49#	1S920	50	200m	1.2 △	100n	50	50u	50	150	3.5p	0 0		200m	4.0 △	20m	175A	Si	A60b
50▼#	BA187	50	200m	1 2 △	100n	50	10u	50	100A	1.8p	0 0	250m				200S	Si	DO35
51#	BAW10TF20	50	200m	1 2	100n	50	10u	50	100			250m	200m	6.0	1.0m	175	Si	DO35
52#	TF20	50	200m	1.2	90u	50	10u	50	100	3 5p	0 0	250m	200m	4.0	20m	150	Si	A60h
53#	ZS90	50	250m	1 1	25u	50	15u	50	100	12p∅	10	275m	250m	5.0	10m	150A	Si	DO7
54#	ZS120	50	250m	1 1	5.0u	50	50u	50	100	12p∅	10	275m	250m	5.0	10m	100A	Si△	DO7
55#	BA192	50	400m	1 0 △	200n	50	25u	50	100			600m	400m	2.0 §	1.2	175J	Si△	DO7
56▼	C6391	50	400m	1.0	200n	50	20u	50	100							175A	Si	M371
57▼	C6391A	50	400m	1.0	25n	50	10u	50	100							175A	Si	M371
58	DR426	50	400m	1 0	700u	50										85A	Ge	DO7
59	MC021	50	400m	1 0	20u	50	15u	50	150			300m	200m			175A	Si	A2c
60	MC021A	50	400m	1.0	25n	50	5.0u	50	150			300m	200m			175A	Si	A2c
61#	TF1	50	400m	1 0 △	200n	50	25u	50	100			600m	400m	2.0	1 2	175J	Si△	A31g
62#	ZS100	50	400m	1 0	20u	50	15u	50	100	12p	10	400m	400m	5 0	10m	175A	Si	DO7
63▼#	1B05J05	50	400m	2 0 △	2 0u	50										100A		M534a
64#	ZS30A	50	500m	1 1	.20u	50	15u	50	100	15p	10	650m	500m			160A	Si△	A44
65#	ZS30B	50	500m	1 1	5.0u	50	50u	50	100	15p	10	650m	500m			160A	Si△	A44
66	HGR5	50	1.0	1 1	10u	50	50u	50	100				1.0m§	30	8 3m	175A	Si	A196a
67▼#	1B08T05	50	2 0	2 5 △	2 0u	50										150A		M631
68▼#	1B20K05	50	4 0	2 5 △	5 0u	50										150A		M534b
69▼#	3B30L05	50	6 0	2.5 △	4 0u	50										150A		M633
70▼#	1B40K05	50	10	2 5 △	10u	50										150A		M534b
71▼#	3B60L05	50	12	2 3 △	10u	50										150A		M633
72▼#	1B100M05	50	20	2 5 △	5 0u	50										150A		M632
73	BTS3500	50	50	1 0	100m	50				1 6p	14	250m	100m	400m	1.0	100A	Si	A1z
74#	RD515	50	50 $	1 0			3 0	50	125C				15	350	10m	150C	Si△	DO5
75	616C	52 ∅	3 0m	1 0	200n	47	40u	47	125	2.5p	12	100m	30m			150A	Si	C3
76	1N304	55	2 0m	1 5	2 0u	10	50u	50	25								Ge	A1sh
77	1N81A	55 *	3 0m	1 0	10u	10	100u	10	70				30m	35	1 0	90	Ge∅	A9k
78	1N5711	55	15m	1 0 △	200n	50	10u	70		2.0p∅	0 0	250m				200S	Si	A1ac
79#	1S1516	55	50m	1 0	500n	50				2.0p∅	0 0		100m	600m	1 0	175J	Si$#	DO7
80#	1S1515	55	100m	1 0	500n	50				2.0p∅	0 0		120m	600m	1.0	175J	Si$#	DO7
81#	1S1554	55	100m	1 4	500n	50				3 0p∅	0.0		100m	1 0	1 0	150J	Si$#	A60g
82	1N3753	55	150m	1 0	5 0u	10	100u	55	25			80m				100	Ge∅	DO7
83	1N211	56	2.7m	1 0	1 0u	56	50u	56	100A	5 6p	6 0	150m	23m			150A	Si*	C1
84	1N389	56	2 7m	1 0	1 0u	56	50u	56	100A			150m	23m			150A	Si	DO7
85	DR352	58 *	10m	35			300u	30	50			80m	100m				Ge∅	DO7
86	1N278	58 *	20m	1 0			125u	50	75			80m		17	1.0	90	Ge∅	DO7
87	1N930	58 *	20m	1 0	100u	75							250m	1 0	1.0		Si	DO7
88	T20G	58 *	20m	1 0			500u	50	75	50p		80m		18	1.0	90	Ge∅	
89	1N454	58 *	200m	1 0	50u	50						130m				90A	Ge∅	A1sh
90	DR351	58 *	200m	1 0			300u	30	50			80m	100m				Ge∅	DO7
91	G156	58 *	200m	1 0	45u	45				.50p	3.0	80m	75m			90	Ge	DO7
92#	BA100	60	1 0m	90			5 0u	10	75				20m			90A	Si	A3
93#	GD74E3	60	2 0m	1 0	100u	10											Ge	F65
94#	GD74E4	60	2 0m	1 0	20u	10											Ge	F65
95#	GD74E5	60	2 0m	1 0	11u	10											Ge	F65
96#	OA71	60	3 0m	40	7 0u	1 5	40u	1 5	60A				35m	20		60	Ge	A1gj
97	1N46	60	3 0m	1 0	1 5m	50							40m				Ge	A1sh
98#	1S446∅	60	3 0m	1 0	50u	10	500u	40	25				30m	300m		85J	Ge∅	DO7
99#	1S451	60	3 0m	1 0	10u	10	500u	40	25				30m	20		85J	Ge∅	DO7
100#	CG66H	60	3 0m	1 0	10u	2 0	1 0m	60	25C	1 0p	10	90m	13m			100	Ge∅	DO7
101#	SD46	60	3 0m	1 0	50u	10	1 0m	50	25				30m	350m		90A	Ge∅	A1bw
102#	AA113	60	3 5m	1 0	150u	30						80m	2 5m			100J	Ge∅	A1ce
103	1N34	60	5 0m	1 0	30u	10	500u	50	25				50m	.50	1 0	90	Ge	A1
104	1N34A	60	5 0m	1 0	30u	10	500u	50	25				50m	50	1 0	90	Ge∅	A9k
105	1N66	60	5 0m	1 0	50u	10	800u	50	25			80m	50m	50	1 0	100	Ge∅	A1sh
106	1N66A	60	5 0m	1 0	50u	10						80m	30m			90	Ge∅	A1sh
107	1N90	60 $	5 0m	1 0	500u	50				1 0p	0 0	80m	30m	50	1 0	90	Ge∅	A1bz
108	1N116	60 $	5 0m	1 0	100u	50				1 0p	0 0	80m	30m	.50	1.0	90	Ge∅	A1bz
109	1N126	60 $	5 0m	1 0	850u	50	50u	10	25	1 0p	0 0	80m	30m	.50	1 0	90	Ge∅	A1sh
110	1N294	60	5 0m	1.0	10u	10	800u	50				80m	50m	.50	1.0	100	Ge∅	DO7

SYMBOLS AND CODES EXPLAINED IN INTERPRETER

3. DIODES

IN ORDER OF (1) PIV, (2) MIN. FWD. CURRENT, (3) Vf, and (4) TYPE No.

LINE No	4 TYPE No.	1 PIV (V)	MINIMUM FORWARD CURRENT 2 If (A)	3 @Vf (V)	MAXIMUM REVERSE CURRENT at 25°C Ir (A)	at Vr (V)	at SPECIFIED TEST CONDITIONS Ir (A)	at Vr (V)	TEMP (°C)	CAPACITANCE CAP (F)	at TEST VOLTS (V)	ABS. MAX. RATINGS AT 25°C DISS. (W)	AV REC FWD. CUR (A)	SURGE CUR. PEAK 1 Cy (A)	PULSE WIDTH (s)	MAX. TEMP. (°C)	DESCRIPTION MAT.	DWG. No.
1	1N294A	60	5 0m	1 0	10u	10						80m	30m			90	Ge	DO7
2▼	1N3160	60	5 0m	1 0 △	12u	6 0	20u	10	55			80m	30m	350m	1.0	90A	Ge	A1cw
3#	1S186	60	5 0m	1.0	500u	50							30m	.30		75J	Ge∅	A1dr
4#	1T22	60	5 0m	1 0	30u	10	500u	50	25A			50m	70m				Ge∅	A1sc
5#	1T22G	60	5 0m	1 0	30u	10	500u	50	25				50m			70	Ge∅	
6#	RL34G	60	5 0m	1 0	10u	10								50			Ge	A1gj
7#	OA6	60	10m	40	2 5u	50							115m	1 0	1 0		Ge∅	C1ab
8#	1S1579	60	10m	870m	100n	50				4.0p∅	0 0		50m	500m	1 0	125J	Si$#	C101
9	1N95	60 $	10m	1 0	500u	50				1 0p	0 0	80m	30m	.50	1.0	90	Ge∅	A1bz
10	1N117	60 $	10m	1 0	100u	50				1 0p	0 0	80m	30m	50	1 0	90	Ge∅	A1bz
11	PS4725	60	10m	1 0	50u	10	25u	50	100			500m	100m			150A	Si△	A1
12#	AAY46	60	10m	1 8	120u	60						100m	50m			80C	Ge∅	Z3§
13	1N96	60	20m	1 0	500u	50				50p	0 0	80m	30m	10	1 0u	90	Ge∅	A1bz
14	1N118	60	20m	1.0	100u	50				.50p	0 0	80m	30m	10	1 0u	90	Ge∅	A1bz
15	1N890	60	20m	1.0	25n	60				10p	0 0	250m	100m	1 0	10m	150A	Si*	A1bz
16#	HSP1011	60	20m	1 0	20u	50						250m	75m	75	10m	175A	Si#$	A1y
17	PD125	60	20m	1 0	25n	60	5 0u	60	150			250m	30m			150	Si	A2
18	T12	60	20m	1 0	30u	10	500u	50	25			130m	70m			80A	Ge∅	A9k
19♦#	AA113P	60 †	20m$	1 4	500u	60	120u	30	25	80f			10m	100m		100J	Ge∅	A1tn$
20	1N96A	60 $	40m	1 0	500u	50						80m	70m	250m		90A	Ge	A1cw
21	1N118A	60 $	40m	1 0	100u	50						80m	70m	250m		90A	Ge	A1cw
22#	HSP1010	60	50m	1.0	05u	50	5 0u	50	150			250m	90m	1 0	10m	175A	Si#$	A1y
23	1N305	60	100m	.80	2 0u	10	65u	10	70	3 0p	10	150m	125m	.50	1 0	70	Ge∅	A1sh
24	1N909	60 *	100m∅	1 0	10u	10						80m	100m	.50	1 0	90	Ge∅	DO7
25	1N3147	60	100m	1 0			20u	30	100			600m				200	Si	A1ce
26	1N3575	60	100m	1 0	750p	60	300n	60	150			250m	150m			150A	Si	A31g
27#	BAV18	60	100m	1 0	100n	50	15u	50	100J	1 5p	0 0	400m	200m	1 0	1 0	175J	Si$#	DO35
28#	BAY18	60	100m	1 0	.10u	50	15u	50	100J	1 2p	10	400m	200m			150J	Si△	DO7
29	CD1141	60	100m	1 0	1 0n	60	1.0u	60	150			200m	150m	80	1 0	200	Si	A1ce
30#	MD135	60	100m	1 0	500n	50							100m	1 0	1 0	175J	Si*	DO7
31	PS4559	60	100m	1 0	25n	60	5 0u	60	150			500m	200m			150A	Si*	A1
32	T9	60	100m	1 0	200u	10	20u	50	25			130m				80A	Ge∅	A9k
33#	ZS10A	60	100m	1 5	05u	60	5.0u	60	100	2.0p	10	150m	100m	20	10m	150A	Si	C1a
34#	ZS10B	60	100m	1 5	50u	60	10u	60	100	2 0p	10	150m	100m	.20	10m	150A	Si	C1a
35	MPD300	60 ∅	100m∅	2 7	03u	30				10p	0 0	400m				175A	Si#$	A1ae
36	1N774A	60 *	200m	1 0	15u	10	150u	50	25A			80m	65m			90A	Ge∅	DO7
37	1N3465	60	200m	1 0	20u	45	100u	60	25			80m	75m			90	Ge∅	DO7
38	CD1147	60	200m	1 0	5 0n	60	5 0u	60	150			200m	170m	1 0	1 0	200	Si	A1sj
39	GD406	60 #	200m	1 0	5.0u	10	20u	30	25			80m		40	1 0	100S	Ge∅	DO7
40	GD409	60 #	200m	1 0	10u	10	100u	50	25			80m		40	1 0	100S	Ge∅	DO7
41#	MS1H	60	200m	1 0	1 0u	60	50u	60	150J			220m	250m			150J	Si	A1bh
42	T7	60	200m	1 0	100u	50						130m				80A	Ge∅	A9k
43#	ZS50	60	200m	1.1	.50u	60	5 0u	60	100	5 0p∅	10	300m	200m			150A	Si	C1a
44▼#	BA215	60	200m	1 3 △	50n	50						400m				200S	Si	DO35
45#	LP1H	60 †	22	1 0	1.0n	60	10u	60	150A	6 0p∅	1 0	.23	.20			150A	Si#	DO7
46#	MS11H	60	.22	1 0	100n	60	20u	60	150A	6 0p∅	1 0	23	20			150S	Si#	DO7
47	1N499	62 §	100m	1 0	30u	50						80m	80m			85	Ge†	DO7
48#	CV425	65	4 0m	1 0	1 0m	50							30m			100J	Ge∅	A1bj
49#	L1/1H	68	25m	4 2	7 5u△	44				20p	10		25m	1.0m	30	55A	Se	
50#	M1	68	25m	4 2	7 5u△	44				20p	10		25m	1 0m	30	55A	Se	
51#	MQ1/1	68	25m	4 2	7 5u△	44				20p	10		.25m	1.0m	30	55A	Se	
52#	P1/1H	68	25m	4 2	7 5u△	44				20p	10		25m	1.0m	30	55A	Se	
53#	Q1/1	68	25m	4 2	7 5u△	44				20p	10		25m	1.0m	30	55A	Se	
54#	R1/1H	68	25m	4 2	7 5u△	44				20p	10		25m	1.0m	30	55A	Se	
55#	T1/1	68	25m	4 2	7 5u△	44				20p	10		.25m	1.0m	30	55A	Se	
56#	L3/1H	68	1 5m	3 5	24u△	44				60p	10		1 0m	6.0m	30	55A	Se	
57#	M3	68	1.5m	3 5	24u△	44				60p	10		1 0m	6.0m	30	55A	Se	
58#	MQ3/1	68	1 5m	3 5	24u△	44				60p	10		1 0m	6.0m	30	55A	Se	
59#	P3/1H	68	1.5m	3 5	24u△	44				60p	10		1 0m	6 0m	30	55A	Se	
60#	Q3/1	68	1 5m	3 5	24u△	44				60p	10		1 0m	6 0m	30	55A	Se	
61#	R3/1H	68	1 5m	3 5	24u△	44				60p	10		1 0m	6.0m	30	55A	Se	
62#	T3/1	68	1 5m	3 5	24u△	44				60p	10		1 0m	6.0m	30	55A	Se	
63	1N212	68	2 0m	1 0	1 0u	68	50u	68	100A	5 2p	6 0	150m	19m			150A	Si*	C1
64	1N390	68	2.0m	1 0	1 0u	68	50u	68	100A			150m	19m			150A	Si	DO7
65	1N1845	68	2.7m	1 0									23m			150A	Si	C12a
66#	L6/1H	68	7 0m	3 1	120u△	44				500p	10		3 5m	28m	30	55A	Se	
67#	MQ6/1	68	7 0m	3 1	120u△	44				500p	10		3 5m	28m	30	55A	Se	
68#	P6/1H	68	7 0m	3 1	120u△	44				500p	10		3 5m	28m	30	55A	Se	
69#	Q6/1	68	7 0m	3 1	120u△	44				500p	10		3 5m	28m	30	55A	Se	
70#	R6/1H	68	7 0m	3 1	120u△	44				500p	10		3 5m	28m	30	55A	Se	
71#	T6/1	68	7 0m	3 1	120u△	44				500p	10		3 5m	28m	30	55A	Se	
72	1N431	68	10m				1 0u	68	80			150m	10m			150A	Si	C1
73#	L8/1H	68	10m	2 8	300u△	44				1.0n	10		5 0m	40m	30	55A	Se	
74#	MQ8/1	68	10m	2 8	300u△	44				1 0n	10		5 0m	40m	30	55A	Se	
75#	P8/1H	68	10m	2 8	300u△	44				1 0n	10		5 0m	40m	30	55A	Se	
76#	Q8/1	68	10m	2 8	300u△	44				1 0n	10		5 0m	40m	30	55A	Se	
77#	R8/1H	68	10m	2 8	300u△	44				1.0n	10		5 0m	40m	30	55A	Se	
78#	T8/1	68	10m	2 8	300u△	44				1.0n	10		5.0m	40m	30	55A	Se	
79	1N113	70 *	2 5m	1 0	25u	10	125u	50	25			75m	50m			75	Ge	A1sh
80	1N114	70 *	2 5m	1 0	50u	10	250u	50	25			75m	50m			75	Ge	A1sh
81	1N115	70 *	2 5m	1 0	100u	10	500u	50	25			75m	50m	50	1 0	75	Ge	A1sh
82	1N86	70	4 0m	1 0	50u	10	833u	50	25				50m			75	Ge	A1sh
83	1N43	70 *	5 0m	1 0	02u	5 0	800u	50	25				40m			75	Ge	A1sh
84	1N69	70 *	5 0m	1 0	50u	10	850u	50	25			80m	40m	40	1 0	70	Ge	DO7
85	1N111	70 *	5.0m	1 0	25u	10	125u	50	25			75m	50m			75	Ge	A1sh
86	1N112	70 *	5 0m	1.0	50u	10	250u	50	25			75m	50m			75	Ge	A1sh
87	1N301	70	5 0m	1 0	01u	10	20u	10	100	4 0p	10	150m	45m	35	1 0	150	Si∅	C3e
88	MC462	70	5 0m	1 0	50u	60	30u	60	150			250m	25m			175A		A2c
89	MT462	70	5 0m	1 0	50u	60	30u	60	150			500m	25m			175A	Si	A60e
90#	RL34	70	5 0m	1 0	30u	10	500u	60	25	70p			50m	.50	1 0	70A	Ge∅	A229
91	1N116A	70 *	10m	1 0	100u	50											Ge	A1sh
92	1N73	70 *	15m	1 5										10	1 0		Ge	DO7§
93	1N301A	70	18m	1 0	01u	10	20u	10	100	5 0p	10	150m	65m	35	1.0	150	Si∅	C3e
94	1N117A	70 *	20m	1 0	100u	50											Ge	A1sh
95	1N350	70	20m	1 0	03u	60	5 0u	60	125				15m				Si	C12a
96♦#	1N457	70 *	20m	1 0	25n	60	5 0u	60	150A	8 0p		200m	75m	600m	1 0	200	Si△	A21
97	1N5208	70	20m	1 0 △	25n	60	5 0u	60	150			200m	75m	1 0	2 0u	200S	Si	DO35
98♦	1N5605	70	20m	1 0 △	25n	60	5.0u	60	150	8 0p∅	0 0	250m				200S	Si	DO35
99	MC457	70	20m	1 0	25n	60	5 0u	60	150			250m	100m			175A		A2c
100	MT457	70	20m	1 0	25n	60	5.0u	60	150			500m	100m			175A	Si	A60e
101	T3G	70 *	20m	1 0	50u	50				50p		80m	80m	35	1 0	90A	Ge∅	A1
102	T12G	70 *	20m	1 0	30u	10	500u	50	25	50p			60m	40	1 0	90A	Ge∅	A1
103	1N298	70	30m	2 0	250u	40						80m	50m	50	1 0	100	Ge∅	DO7
104	1N298A	70	30m	2 0	10u	5 0	250u	40	50			80m	30m			90	Ge∅	DO7
105	1N288	70	40m	1 0	350u	50								75	1 0	90	Ge	DO7
106	T2G	70 *	40m	1 0	300u	50						80m	70m			90A	Ge∅	A1
107	1N301B	70	50m	1 0	01u	10	20u	10	100	5 5p	10	150m	75m	55	1 0	150	Si∅	C3e
108	DR291	70 *	50m	1 0	100u	25						80m					Ge∅	DO7
109#	DK20	70	100m	80	25u	50				40p	10		80m			90A	Ge∅	DO7
110#	HG5002	70 ∅	100m	80	5.0u	50				40p	10	80m	80m	45	1 0	90	Ge∅	DO7

SYMBOLS AND CODES EXPLAINED IN INTERPRETER

3. DIODES

IN ORDER OF (1) PIV, (2) MIN. FWD. CURRENT, (3) Vf, and (4) TYPE No.

LINE No	4 TYPE No.	1 PIV (V)	MINIMUM FORWARD CURRENT 2 If (A)	3 @Vf (V)	MAXIMUM REVERSE CURRENT at 25°C Ir (A)	at Vr (V)	at SPECIFIED TEST CONDITIONS Ir (A)	at Vr (V)	TEMP. (°C)	CAPACITANCE CAP. (F)	at TEST VOLTS (V)	ABS. MAX. RATINGS AT 25°C DISS. (W)	AV REC FWD. CUR. (A)	SURGE CUR PEAK 1 Cy (A)	PULSE WIDTH (s)	MAX. TEMP. (°C)	DESCRIPTION MAT.	DWG No.
1#	HG5004	70 ∅	100m	80	25u	50				40p	10	80m	80m	.45	1 0	90	Ge∅	DO7
2#	HG5006	70 ∅	100m	80	50u	50				40p	10	80m	80m	.45	1.0	90	Ge∅	DO7
3	1N292	70 *	100m	1 0	200u	50						80m	70m	.15	1 0	90A	Ge	DO7
4	1N457A	70 *	100m	1 0	25n	60	5 0u	60	150A	5.0p	0 0	500m	200m	1 5	1.0	200	Si	A60p
5	1N462A	70 *	100m	1 0	50u	60	30u	60	150A			500m	200m			200	Si	A60p
6	1N483A	70	100m	1 0	25n	60	15u	60	150			250m	200m	2 0	10m	200A	Si	A1cw
7	1N483C	70	100m	1 0	5.0n	60											Si	A1bz
8	1N500	70 *	100m	1 0	40u	60						80m	80m			85	Ge†	DO7
9	1N774	70 *	100m	1 0	15u	10	150u	50	25A			80m	50m			90A	Ge∅	DO7
10	1N775	70 *	100m	1 0	20u	10	250u	50	25A			80m	50m			90A	Ge∅	DO7
11	MC457A	70	100m	1 0	25n	60	5 0u	60	150			250m	150m			175A		A2c
12	MC462A	70	100m	1.0	50u	60	30u	60	150			250m	150m			175A		A2c
13	MT457A	70	100m	1 0	02t	60	5 0u	60	150			500m	150m			175A	Si	A60e
14	MT462A	70	100m	1 0	50u	60	30u	60	150			500m	150m			175A	Si	A60e
15	PS2207	70	100m	1 0	25n	10	5.0u	10	150							175A	Si	M174
16	PS2208	70	100m	1 0	25n	10	5.0u	10	150							175A	Si	M174
17	PS2209	70	100m	1 0	25n	10	5.0u	10	150							175A	Si	M174
18	T8G	70 *	100m	1 0	5 0u	10	20u	100	25	50p			80m	.40	1.0	90A	Ge∅	A1
19	T9G	70 *	100m	1 0	2 0u	10	20u	50	25	.50p		80m		.45	1 0	90	Ge∅	A1
20	1N483	70	100m	1 1	25u	60	30u	60	150			250m	100m	1.0	10m	200A	Si	A1cw
21#	1S1553	70	100m	1 4	500n	60				3 0p⊠	0.0		100m	1.0	1 0	150J	Si$ #	A60g
22	CD1112	70	250m	1 0	5.0n	70	5.0u	70	150	3.0p	6 0	200m	200m	1 0	1.0	200	Si	A1ce
23	MA1702	75	1 0m	590m△	30n	30	30	30	150A	1 0p⊠	0.0	700m	200m	4 0	1 0u	175J	Si$	DO34
24	DA1702	75	1 0m	65	30n	30	30u	30	150	1 0p⊠	0 0	700m	200m	1.0	1.0u	175A	Si$	DO35
25	618C	75 ⊠	1 5m	1 0	.20u	68	40u	68	125	2 0p	12	100m	25m			150A	Si	C3
26	1N45	75	3.0m	1 0	410u	50							35m				Ge	A1sh
27#	1S32	75	4 0m	1.0	6 5u	10							30m	300m	1 0	75J	Ge⊠	DO7
28#	1S34	75	4 0m	1 0	350u	50							30m	300m	1 0	75J	Ge⊠	DO7
29#	1N34AS	75	5 0m	1 0	500u	50	30u	10	25			80m	30m	.50	1.0	90A	∅	DO7
30	1N49	75	5 0m	1 0	200u	20											Ge	DO7
31	1N50	75	5 0m	1 0	80u	20											Ge	DO7
32	1N69A	75 *	5 0m	1.0	30u	10	500u	50	25			80m	40m	.40	100m	90	Ge⊠	A9k
33	1N126A	75 *	5.0m	1 0	50u	10	800u	50	25				30m	.35	1 0	90	Ge	A1bz
34	1N135	75	5 0m	1 0	850u	50											Ge	DO7
35	1S447	75	5 0m	1 0	20u	10	500u	60	25				40m	.30		85J	Ge⊠	DO7
36#	1S452	75	5 0m	1 0	10u	10	200u	60	25				40m	.30		85J	Ge⊠	DO7
37#	MD34	75	5 0m	1 0	30u	10	500u	50	25				50m	500m	1 0	70J	Ge⊠	DO7
38#	SD11F	75	5 0m	1.0	30u	10	500u	50	25				15m				Ge	M236
39#	SD34	75	5 0m	1 0	20u	10	350u	50	25				30m	350m		90A	Ge⊠	A1bw
40#	SD54	75	5.0m	1.0	7 0u	10	100u	50	25				30m	.35		90A	Ge⊠	A1bw
41#	1S453	75	7 0m	1 0	5 0u	10	200u	60	25				40m	.30		85J	Ge⊠	DO7
42	1N314	75	15m	1 0			50u	10	85				100m			125	Ge	DO7
43	1N74	75	15m	1 5	50u	10							22m	.10	1.0	70A	Ge	M4*
44#	1S942△	75	50m		5 0u	75	100u	75	100	8.0p⊠	0.0			2 0		150S	Si	A9g
45#	BA128	75 ⊠	50m	1 0 △	10u	50	100u	50	100	5.0p⊠	0.0	350m	75m	.50	1.0	125A	Si#	DO7
46#	EC402	75 ⊠	50m	1.0	.10u	50	1.0u	50	100	8 5p⊠	0 0	250m	150m	50	1.0	150A	Si#	DO7
47#	OA129	75	50m	1 1	50u	65				10p	10	250m				175J	Si	A1ce
48	1N281	75 *	100m	1 0	30u	10	500u	50	25			80m	75m	.40	1.0	90	Ge∅	DO7
49	1N773	75 *	100m	1 0	10u	10	100u	50	25A			80m	50m			90A	Ge∅	DO7
50	CD5645	75	100m	1 0 △	10p	10	20n	10	150A	4.0p⊠	0.0	250m	200m	1 0	1 0	150A	Si#$	DO7
51	1N773A	75 *	200m	1 0	10u	10	100u	50	25A			80m	65m			90A	Ge∅	DO7
52#	BAX79	75 ⊠	200m	1 0	10u	50	100u	50	125	2.5p	0 0	500m	200m	1.0	1.0	150A	Si† $	A1aq
53	GD408	75 #	200m	1.0	6 0u	10	50u	50	25			80m		.40	1.0	100S	Ge∅	DO7
54	PS609	75 §	200m	1.0	25u	60	30u	60	150A			500m	200m			200	Si	DO14
55	PS610	75 §	200m	1.0	25n	60	15u	60	150A			500m	200m			200	Si	DO14
56	PS611	75 §	200m	1 0	25n	60	5 0u	60	150A			500m	200m			200	Si	DO14
57#	SD17	75	200m	1 0	300u	50							100m	700m		90A	Ge∅	A1bw
58#	0500	75	250m	1.2	5 0u	75				40p	1.0	400m	250m	10	10m	125	Si	A1ce
59	BAX18	75	2 0	2 0 △			100u	75	150J				350m	6.0	10m	200J	Si△	A134e
60#	RL43G	80	2.0m	1 0	10u	10								.50			Ge	A1gj
61#	RL247	80	2 0m	1 0	10u	10				70p				30	1 0		Ge	A229
62#	RL247G	80	2 0m	1 0	10u	10								.50			Ge	A1gj$
63	1N65	80 *	2 5m	1 0	200u	50							50m	.50	1 0	75	Ge	DO7
64#	DK14	80	3.0m	.35	15u	25				50p							Ge∅	DO7
65	1N89	80 $	3 5m	1 0	100u	50	8 0u	5.0	25	1.0p	0 0	80m	30m	.50	1 0	90	Ge⊠	A1sh
66	1N297	80	3 5m	1 0	10u	5.0	100u	50	25			80m	35m	50	1 0	100	Ge⊠	A1sh
67	1N297A	80	3.5m	1.0	10u	5.0						80m	30m			90	Ge	A1sh
68	1N48	80 *	4 0m	1 0	833u	50							50m			75	Ge	DO7
69	1N52	80 *	4.0m	1.0	150u	50							50m			75	Ge	DO7
70	1N57	80	4 0m	1 0	500u	75						500m					Ge	A1sh
71	1N57A	80	4 0m	1 0	500u	75							40m	.50	1.0	75A	Ge⊠	DO7
72	1N67A	80 $	4 0m	1 0	50u	50	5 0u	5.0	25	1.0p	0 0	80m	30m	.50	1.0	90	Ge⊠	A1bz
73	1N198	80 $	4 0m	1 0	50u	50	10u	10	25	1 p	0 0	80m	30m	.50	1 0	90	Ge⊠	A1bz
74	1N198A	80	4 0m	1 0	50u	50	250u	50	75				30m	1 0	1 0u	90	Ge	DO7
75	1N198M	80 $	4.0m	1 0			75u	10	75								Ge∅	DO7
76	1N265	80	4 0m	1.0	30m	60											Ge	DO7
77	1N355	80	4 0m	1 0	5 0u	5 0	50u	50	25				50m			90	Ge	A1sh
78	1N462	80 *	5.0m	1.0	50u	60	30u	60	150	8.0p	0 0	200m	50m	50	1.0	200	Si△	A1bz
79	1N97	80 $	10m	1 0	100u	50	8 0u	5 0	25	1 0p	0.0	80m	30m	.50	1.0	90	Ge⊠	A1bz
80	1N99	80 $	10m	1.0	50u	50	5.0u	5 0	25	1 0p	0 0	80m	30m	.50	1 0	90	Ge⊠	A1bz
81	1N98	80	20m	1.0	100u	50				500f	0 0	80m	30m	100m	1.0u	90	Ge⊠	A1bz
82	1N100	80	20m	1.0	50u	50				50p	0.0	80m	30m	10	1 0u	90	Ge⊠	A1bz
83	1N141	80 *	20m	1.0	50u	50						130m	70m	.50	1.0	90A	Ge∅	A1sh
84	1N289	80 *	20m	1 0	50u	50							80m	.50	1 0	70	Ge	DO7
85	1N457M	80 *	20m	1.0	25n	60	5 0u	60	150			.20	75m			200	Si△	A2
86	MC890	80	20m	1 0	25n	60	5.0u	60	150			25	.10			175A		A2c
87	MT890	80	20m	1.0	25n	60	5.0u	60	150			500m	100m			175A	Si	A60e
88	1N98A	80 $	40m	1 0	100u	50						80m	70m	250m		90A	Ge	A1cw
89	1N100A	80 $	40m	1 0	50u	50						80m	70m	250m		90A	Ge	A1cw
90	1N140	80 *	40m	1 0	300u	50						130m	85m	.75	1 0	80A	Ge∅	A1sh
91	1N483AM	80	.10	1 0	25n	60	15u	60	150			30	15			200	Si	A2a
92	1N483B	80 *	10	1.0	25n	60	5.0u	60	150			25	.20	2.0	1.0m	200A	Si	A1cw
93	JAN1N483B	80	100m	1 0 △	25n	70	5 0u	70	150A				200m	2.0	8.0m	200A	Si	DO7
94	1N483BM	80	10	1 0	25n	60	5.0u	60	150			30	.15			200	Si	A2a
95	1N772	80 *	100m	1 0			50u	50	25A			80m	50m			90A	Ge∅	DO7
96	1N3865	80	100m	1 0	30u	50	400u	50	65			80m	80m			90A	Ge	DO7
97	1N5194	80	10	1 0 △	25n	70	5.0u	70	150			25	20	2 0	8 3m	200S	Si	DO35
98	JAN1N5194	80	.10	1.0 △	25n	70	5.0u	70	150				.20	2.0	8.0m	200A	Si	A9c
99#	105B6	80 §	100m	1.0	1.0u	60						400m	100m			100	Si△	DO7
100	DR314	80	100m	1.0	50u	50						80m	80m				Ge∅	DO7
101	MC60	80	10	1 0	25n	60	5.0u	60	150				.15					M409a
102	MC483A	80	.10	1.0	25n	60	15u	60	150			.25	.15			175A		A2c
103	MC483B	80	10	1 0	25n	60	5 0u	60	150			25	.15			175A		A2c
104	MT483A	80	10	1 0	25n	60	15u	60	150			50	.15			175A	Si	A60e
105	MT483B	80	10	1 0	25n	60	5 0u	60	150			50	.15			175A	Si	A60e
106	GSM53	80	100m	1 1	.25u	60	30u	60	150			250m	100m			150	Si	A2j
107	MC483	80	100m	1 1	25u	60	30u	60	150			250m	150m			175A		A2c
108	MT483	80	100m	1 1	25u	60	30u	60	150			500m	150m			175A	Si	A60e
109#	BAW51	80 ⊠	10	1 2 △	30n	50	30u	50	125	8.0p⊠	0 0	50	.19	4 0	100u	150J	Si⊠	DO7
110	1N772A	80 *	200m	1 0			50u	50	25A			80m	65m			90A	Ge∅	DO7

SYMBOLS AND CODES EXPLAINED IN INTERPRETER

3. DIODES

IN ORDER OF (1) PIV, (2) MIN. FWD. CURRENT, (3) Vf, and (4) TYPE No.

LINE No	TYPE No	1 PIV (V)	MINIMUM FORWARD CURRENT 2 If (A)	3 @Vf (V)	MAXIMUM REVERSE CURRENT at 25°C Ir (A)	at Vr (V)	at SPECIFIED TEST CONDITIONS Ir (A)	at Vr (V)	TEMP. (°C)	CAPACITANCE CAP. (F)	at TEST VOLTS (V)	ABS. MAX. RATINGS AT 25°C DISS. (W)	AV REC FWD. CUR. (A)	SURGE CUR. PEAK 1 Cy (A)	PULSE WIDTH (s)	MAX. TEMP. (°C)	DESCRIPTION MAT	DWG. No
1	1N3666M1	80 $	200m	1 0			150u	20	75								Ge∅	DO7
2	1N3666M2	80 $	200m	1 0			150u	20	75								Ge∅	DO7
3	1N3666M	80 $	200m	1 0			150u	20	75								Ge∅	DO7
4	TI55	80 ∅	200m	1 0 △	1 0u	60						400m				100A	Si	A31f
5	WD004	80	200m	1 0	25u	60	30u	60	150			400m	200m			150	Si	DO7
6	WD005	80	20	1 0	25n	60	15u	60	150			40	20			150	Si	DO7
7	WD006	80	20	1 0	25n	60	5 0u	60	150			40	.20			150	Si	DO7
8	DR330	80	300m	1 0	10u	10	50u	50	25A			80m	100m				Ge∅	DO7
9	DR463	80 *	300m	1 0	100u	10	500u	50	25			80m	100m				Ge∅	DO7
10	GSM54	80	400m	1 0	.25u	60	30u	60	150			250m	200m			150	Si	A2j
11	1N213	82	1 5m	1 0	1 0u	82	50u	82	100A	4.8p	6.0	150m	16m			150A	Si*	C1
12	1N391	82	1 5m	1.0	1 0u	82	50u	82	100A			150m	16m			150A	Si	DO7
13	PD133	85	10m	1 0	1 0u	60	40u	60	100			250m	30m			150	Si	A2
14	T19	85	200m	1 0						90p		130m	70m	.30	1 0	80A	Ge∅	A86a
15	T19G	85	200m	1 0						.50p			60m	30	1 0	90A	Ge∅	
16	DR207	86 *	20m	1 0	50u	50						80m	60m				Ge∅	DO7
17	DR338	86 *	40m	1 0	100u	50						80m					Ge∅	DO7
18	DR128	86 *	50m	1 0	100u	50						80m					Ge∅	DO7
19	DR283	86 *	50m	1 0	30u	10						80m					Ge∅	DO7
20	DR318	86 *	50m	1 0	2 0u	10											Ge∅	DO7
21	DR319	86 *	50m	1 0	5 0u	10											Ge∅	DO7
22	DR366	86 *	50m	1 0	100u	50											Ge∅	DO7
23	DR213	86 *	100m	1 0	2 0u	10	20u	50	25			80m	80m				Ge∅	DO7
24	DR326	86 *	100m	1 0	250u	10						80m	80m				Ge∅	DO7
25	DR307	86 *	200m	1 0	50u	20						80m	100m				Ge∅	DO7
26	DR389	86 *	200m	1 0	50u	50						80m	100m				Ge∅	DO7
27	DR329	86 *	300m	1 0	50u	20						80m	100m				Ge∅	DO7
28	DR303	86 *	400m	1 0	50u	20						80m	100m				Ge∅	DO7
29#	AA117△	90	10m	.18	280u	100	2.5u	1 5	25				50m	50		75A	Ge	DO7
30#	RL43	90	2 0m	1 0	10u	10	500u	80	25	70p			50m	.30	1.0	70A	Ge∅	A229
31	1N476	90	3 0m	1 0	180u	75							50m			75	Ge	A1sh
32	1N477	90	3 0m	1 0	180u	75							50m			75	Ge	A1sh
33	1N617	90	3 0m	1 0	11u	10	175u	75	25				50m	50	1 0	75	Ge	A1sh
34#	GD2E	90	3 0m	1 0	10u	10	500u	80	25	1 0p			50m	30	1 0	60A	Ge∅	A99
35	1N88	90	5 0m	1 0	75u	100	190u	75	60					40	1 0		Ge	A1sh
36	1N478	90	5 0m	1 0	155u	75							50m			75	Ge	A1sh
37	1N479	90	5 0m	1 0	155u	75							50m			75	Ge	A1sh
38	1N618	90	5 0m	1 0	7 0u	10	115u	75	25				50m	.50	1.0	75	Ge	A1sh
39#	AA118△	90	5 0m	1 0	80u	100	1 2u	1 5	25							75	Ge	DO7
40	1N3769	90	25m	50	5 0u	5 0	20u	65	25			80m				100	Ge∅	DO7
41#	HG5001	90 ∅	100m	80	5 0u	50				.40p	10	80m	80m	.45	1 0	90	Ge∅	DO7
42#	HG5003	90 ∅	100m	80	25u	50				.40p	10	80m	80m	45	1 0	90	Ge∅	DO7
43#	HG5005	90 ∅	100m	80	50u	50				40p	10	80m	80m	45	1 0	90	Ge∅	DO7
44#	1S1514	90	100m	1 0	500n	80				2 0p∅	0.0		120m	600m	1.0	175J	Si$#	DO7
45	MPD400	90 ∅	100m∅	3 5	03u	30				7.0p	0.0	400m				175A	Si#$	A1an
46▼#	AA118P	90	5 0	1 0	75u	100							50m	500m		75S	Ge∅	A1tn$
47	1N67	92 *	4 0m	1 0	5 0u	5 0	50u	50	25			80m	35m	50	1 0	100	Ge∅	DO7
48	1N97A	92 *	20m	1 0	8 0u	5.0	100u	50	25								Ge	A1sh
49	1N99A	92 *	20m	1 0	5 0u	5 0	50u	50	25								Ge	A1sh
50	1N501	92 *	100m	80	20u	80						80m	80m			90	Ge	DO7
51	1N771	92 *	100m∅	1 0			25u	50	25A			80m	50m			90A	Ge∅	DO7
52	1N771A	92 *	200m	1 0			25u	50	25A			80m	65m			90A	Ge∅	DO7
53	G154	92 *	200m	1 0	40u	80				50p	3 0	80m	75m			90	Ge	DO7
54	G155	92 *	200m	1 0	80u	80				.50p	3 0	80m	75m			90	Ge	DO7
55	1N771B	92 *	400m	1 0			25u	50	25A			80m	75m			90A	Ge∅	DO7
56	1N1626A	95	20m	2 0	15u	52	18u	52	100J				500u	10m	1 0	25A	Se∅	M204a
57	1N1628	95	1 5m	2 0	27u	52	33u	52	100J				3 8m	80m	1 0	25A	Se∅	M204
58	1N1636	95	5 0m	2 0	108u	52	135u	52	100J				13m	.25	1 0	25A	Se∅	DO7
59	1N1641	95	11m	2 0	240u	52	300u	52	100J				28m	.55	1 0	25A	Se∅	DO7
60	1N1626	96	100u	2 0	15u	52							250u	5.0m	1.0	100A	Se	M204a
61	MA1701	100	1 0m	590m△	30n	30	30	30	150A	1 0p∅	0.0	700m	200m	4 0	1 0u	175J	Si$	DO34
62	DA1701	100	1 0m	650m△	30n	30	30u	30	150	1 0p∅	0 0	700m	200m	4.0m	1 0u	175A	Si$	DO35
63#	15P2	100	1 0m	1 0 △	50u		100u		125	.40p	2 0		40m	.12	1 0	125A	Si	DO7
64#	AD100△	100	1 0m	1 0	50u	100	10u	100	150	40p	2 0	150m	40m	30	10m	170A	Si∅	DO7
65#	BA122	100	1 0m	1 0			10u	100	60				90m	200	1.0	90	Si	DO7
66	1N214	100	1 2m	1 0	1 0u	100	50u	100	100A	4 5p	6.0	150m	125m			150A	Si*	C1
67	1N392	100	1 2m	1 0	1 0u	100	50u	100	100A			150m	125m			150A	Si	DO7
68	1N1846	100	1 5m	1 0									16m			150A	Si	C12a
69	1N75	100 §	2 5m	1 0	50u	50							50m	75			Ge	DO7
70	1N68	100	3 0m	1.0	625u	100						80m	35m	50	1 0	100	Ge∅	DO7
71	1N68A	100 $	3 0m	1 0	625u	100				1 0p	0.0	80m	30m	.50	1 0	90	Ge∅	DO7
72	1N127	100 $	3.0m	1 0	300u	50	25u	10	25	1 0p	0.0	80m	30m	.50	1 0	90	Ge∅	DO7
73#	CG61H	100	3 0m	1 0	50u	50	500u	100	25				30m			100J	Ge∅	A1bj
74#	CG62H	100	3 0m	1 0	100u	50	500u	100	25				30m			100J	Ge∅	A1bj
75#	CG63H	100	3.0m	1 0	200u	50	500u	100	25				30m			100J	Ge∅	A1bj
76#	CV448	100	3.0m	1.0	100u	50	50u	10	60				25m			100J	Ge∅	A1bj
77#	RL44G	100	3.0m	1 0	10u	10								50			Ge	A1gj
78	1N38	100	4 0m	1 0	6 0u	3.0	500u	100	25				50m	50	1 0	90	Ge	DO7
79	1N58A	100	4 0m	1 0	600u	100							50m	50	1 0	90	Ge∅	DO7
80	1N63	100	4 0m	1 0	50u	50							50m	50	1 0	90	Ge∅	DO7
81	1N63A	100	4 0m	1 0	50u	50						80m	30m			90	Ge	DO7
82#	1S187	100	4.0m	1 0	500u	100							30m	30		75J	Ge∅	A1dr
83	1N290	100	5 0m	1 0	100u	100								30	1 0	90	Ge	DO7
84	1N899	100	5 0m	1 0	.10u	80	20u	80	100			250m				150	Si△	A2
85#	AA144	100	5 0m	1 0	200u	75						80m	60m			85S	Ge∅	DO7
86	PD104	100	5 0m	1 0	500n	10	25u	10	100	2 0p	10	.25		2 0	1 0u	150	Si△	A2
87#	SFD108	100	5 0m	1 0	250u	100	380u	100	55A				30m	50	1.0	85S	Ge∅	DO7
88	OA5	100	10m	25	20u	1 5	5.0u	1.5	60				115m	.50	1 0	75	Ge	C1ab
89#	AE100	100	10m	1 0	50u	100	100u	100	150	40p	2.0	150m	60m	35	10m	170A	Si∅	DO7
90#	BAW32C	100	10m	1 0	100n	100	20u	100	125	400n∅	6.0		60m	120m	1 0	150S	Si	DO7
91#	MCS101	100	10m	1 0 △	100n	30	20u	30	100A	4 0p∅	1 0	250m	10m	2.0	10m	175S	Si△	DO7
92	1N310	100	15m	1 0	20u	20	100u	100	25			80m	40m			90	Ge∅	A1sh
93#	CA100	100	15m	1 0	.03u	10	.50u	10	55A			150m	35m	1 0	10m	150A	Si*	C18d
94#	CB100△	100	15m	1.0	.10u	10	2 0u	10	55A			150m	35m	1 0	10m	150A	Si*	C18d
95	1N313	100	20m	1 0	10u	20	50u	100	25			80m	40m			90	Ge∅	A1sh
96	PD105	100	20m	1.0	500n	10	25u	10	100	2 0p	10	25		2 0	1 0u	150	Si△	A2
97	1N448	100	25m	1 0	30u	30	100u	100	25	50p	3 0		60m	30	1 0	75	Ge†	DO7
98	1N291	100	40m	1 0	100u	100								40	1 0	90	Ge	DO7
99	1N450	100	50m	1 0	50u	50	100u	100	25				60m			75	Ge†	DO7
100	1N900	100	50m	1 0	10u	80	20u	80	100			250m				150	Si△	A2
101	AM307A	100	50m	1 0	1 0n	80	3.0u	80	150	6.0p∅	0 0	50	.10	60	1 0	200S	Si△	DO7
102#	BA147/100	100	50m	1 0 △	1 0u	100	30u	50	100A			210m	100m			150J	Si	DO7
103#	MCS105	100	50m	1 0 △	100n	100	20u	100	100A	4 0p∅	1 0	250m	50m	2.0	10m	175S	Si△	DO7
104#	PD106	100	50m	1 0	500n	10	25u	10	100	2 0p	10	25		2 0	10u	150	Si△	A2
105	BA219	100	50m	1 3 △	200n	50				5.0p∅	0 0		75m	2 0	1.0u	200J	Si	A134e
106#	25J2	100	60m	1 3 △	.10u	100	20u	100	125	40p	2 0		60m	12	1 0	125J	Si∅	DO7
107#	HG5020	100	100m	85	30u	100										90	Ge∅	DO7
108	1N277M	100 $	100m	1.0			75u	10	75								Ge∅	DO7
109	1N901	100	100m	1 0	.50u	80	20u	80	100			250m				150	Si△	A2
110#	1S181	100	100m	1 0	3 0u	100											Si△	DO7

SYMBOLS AND CODES EXPLAINED IN INTERPRETER

3. DIODES

IN ORDER OF (1) PIV, (2) MIN. FWD. CURRENT, (3) Vf, and (4) TYPE No.

LINE No.	TYPE No	PIV (V)	MINIMUM FORWARD CURRENT 2 If (A)	3 @Vf (V)	MAXIMUM REVERSE CURRENT at 25°C Ir (A)	at Vr (V)	at SPECIFIED TEST CONDITIONS Ir (A)	at Vr (V)	TEMP. (°C)	CAPACITANCE CAP. (F)	at TEST VOLTS (V)	ABS. MAX. RATINGS AT 25°C DISS. (W)	AV REC FWD. CUR. (A)	SURGE CUR. PEAK 1 Cy (A)	PULSE WIDTH (s)	MAX. TEMP. (°C)	DESCRIPTION MAT.	DWG. No.
1	AM304A	100	10	1 0	1 0n	80	3 0u	80	150	6 0p⊘	0 0	50	15	1 0	1 0	200S	Si△	DO7
2#	BAX22	100	100m	1 0	10u	100				6.0p⊘	0 0	200m				200J	Si$#	A60h
3	PD107	100	10	1 0	500n	10	25u	10	100	2.0p	10	25		2 0	1 0u	150	Si△	A2
4	TMD42	100	10	1 0	250n	100	30u	100	100	4 0p	10	10	75m	40	1.0m	150A	Si△	A2l
5#	BA104	100	100m	1 1	1 0u	100				20p⊘	5 0	210m				150J	Si*	C1g
6	1N270	100 *	200m	1 0	100u	50						80m		50	1 0	90	Ge⊘	DO7
7	JAN1N270	100 *	200m	1 0 △	100u	80	75u	10	75				60m	1.0	8 3m	75A	Ge	A1dd
8#	1S131△	100	200m	1 0 △			50u	100	100				200m	1 5	1 0	100A	Si	A1
9	AM301A	100	20	1 0	1 0n	80	3.0u	80	150	6.0p⊘	0 0	.50	30	2 0	1 0	200S	Si△	DO7
10	DR668	100 *	20	1 0	25n	60	5 0u	60	150A					1 0	10m	150A	Si	DO7
11	GD411	100 #	200m	1 0	65u	40	100u	80	25			80m		40	1 0	100S	Ge⊘	DO7
12	MCPD530A	100	200m	1 0	200n	100	10u	100	100			250m				150A	Si	M411
13	MCPD530B	100	200m	1 0	200n	100	10u	100	100			500m				150A	Si	M411a
14	MCPD530C	100	200m	1 0	200n	100	10u	100	100			500m				150A	Si	M277d
15#	MS2H	100	200m	1 0	1 0u	100	50u	100	150J			220m	250m			150J	Si	A1bh
16#	SD18	100	200m	1.0	100u	50							100m	700m		90A	Ge⊘	A1bw
17#	AAY14	100	200m	1 1	6 0u	10											Ge⊘	C71
18#	1S921△	100	200m	1 2 △	100n	100	50u	100	150	3.5p	0.0		200m	4 0 △	20m	175A	Si	A60b
19▼#	BA188	100	200m	1.2 △	100n	100	10u	100	100A	1 8p	0 0	250m				200S	Si	DO35
20#	BAW11TF21	100	200m	1 2	100n	100	10u	100	100			250m	200m	6 0	1.0m	175	Si	DO35
21#	TF21	100	200m	1 2	10u	100	10u	100	100	3.5p	0 0	250m	200m	4.0	20m	150	Si	A60h
22#	LP2H	100 †	225m	1 0	1 0n	100	10u	100	150A	6.0p⊘	1.0	237m	205m			150A	Si#	DO7
23#	MS12H	100	225m	1 0	100n	100	20u	100	150A	6.0p⊘	1 0	237m	205m			150S	Si#	DO7
24#	ZS91	100	250m	1 1	.25u	100	15u	100	100	12p⊘	10	275m	250m	5 0	10m	150A	Si	DO7
25#	ZS121	100	250m	1 1	5 0u	100	50u	100	100	12p⊘	10	275m	250m	5 0	10m	100A	Si△	DO7
26#	AAY12	100	300m	1 2	5 0u	1 5	30u	100	25				110m	600m	300m	75A	Ge⊘	
27	40SG1	100	.40	1 0	100n	100	5.0u	100	150	10p⊘	1.0	.45	40	3 0	8 0m	175A	Si	A1da
28#	BA193	100	400m	1 0 △	200n	100	25u	100	100			600m	400m	2 0 §	1 2	175J	Si△	DO7
29▼	C6392	100	400m	1 0	200n	100	20u	100	100							175A	Si	M371
30▼	C6392A	100	400m	1 0	25n	100	10u	100	100							175A	Si	M371
31	GSM482	100	400m	1 0	10u	75	50u	75	150			250m	200m			150	Si	A2j
32	MC022	100	400m	1 0	20u	100	15u	100	150			300m	200m			175A	Si	A2c
33	MC022A	100	40	1 0	25n	100	5.0u	100	150			30	20			175A	Si	A2c
34#	TF2	100	400m	1 0 △	200n	100	25u	100	100			600m	400m	2 0	1 2	175J	Si△	A31g
35#	ZS101	100	400m	1 0	20u	100	15u	100	100	12p	10	400m	400m	5 0	10m	175A	Si	DO7
36▼#	1B05J10	100	400m	2 0 △	2 0u	100										100A		M534a
37	MC1520	100	500m	1 0	10u	100	10u	100	150			750m	500m			175A	Si	A2d
38#	ZS31A	100	500m	1 1	20u	100	15u	100	100	15p	10	650m	500m			160A	Si	A44
39#	ZS31B	100	500m	1 1	5 0u	100	50u	100	100	15p	10	650m	500m			160A	Si△	A44
40	HGR10	100	1 0	1 1	10u	100	50u	100	100				1 0m§	30	8 3m	175A	Si	A196a
41▼#	1B08T10	100	2 0	2 5 △	2 0u	100										150A		M631
42▼#	1B20K10	100	4 0	2 5 △	5 0u	100										150A		M534b
43▼#	3B30L10	100	6 0	2 5 △	4 0u	100										150A		M633
44▼#	1B40K10	100	10	2 5 △	10u	100										150A		M534b
45▼#	3B60L10	100	12	2 3 △	10u	100										150A		M633
46▼#	1B100M10	100	20	2 5 △	5 0u	100										150A		M632
47#	RD1015	100	50 $	1 0			3 0	100	125C				15	350	10m	150C	Si△	DO5
48#	1S17	105 *	3 0m	1.0	275u	10							50m			75	Ge⊘	A1gj
49#	1S18	105 *	5 0m	1 0	250u	10							50m			75	Ge⊘	A1gj
50#	0100	105 #	100m	1 0	10u	50						250m	125m	1.0		150J	Si*	C18f
51#	0110	105 #	100m	1 0	1 0u	50						250m	125m	1.0		150J	Si*	C18f
52	620C	110 ⊘	90m	1 0	20u	100	40u	100	125	1 4p	12	100m	20m			150A	Si	C3
53#	1S448	110	3 0m	1 0	10u	10	300u	100	25				30m	20		85J	Ge⊘	DO7
54#	GD3E	110	3 0m	1 0	10u	10	500u	100	25	1 0p			50m	30	1 0	60A	Ge⊘	A99
55#	1S449	110	5 0m	1.0	20u	10	200u	100	25				40m	200u		85J	Ge⊘	DO7
56	1N44	115	3 0m	1 0	1 0m	50							35m				Ge	A1sh
57#	RL44	115	3 0m	1 0	10u	10	420u	100	25	70p			50m	50	1 0	70A	Ge⊘	A229
58	1N38A	115 *	4 0m	1 0	6 0u	3 0	500u	100	25				50m	.50	1.0	90	Ge	DO7
59	1N58	115 *	4 0m	1 0	600u	100							50m	50	1 0	90	Ge	DO7
60	1N142	115 *	5 0m	1 0	100u	100						130m	60m	.40	1 0	90A	Ge⊘	A1sh
61	T4G	115 *	5.0m	1 0	100u	100				50p		80m	50m	.30	1.0	90A	Ge⊘	A1
62	T17	115 *	5 0m	1 0	5 0u	3 0	500u	100	25			130m	60m			80A	Ge⊘	
63	1N42	115 *	12m	1 5										10			Ge	DO7§
64	1N931	115 *	20m	1 0	100u	125							250m	1 0	1.0		Si	DO7
65#	OA81	115	30m	1 0	275u	100	450u	100	60				50m	50	1.0	75	Ge	A1gj
66#	OA85	115	30m	1 0	250u	100	430u	100	60				50m	50	1.0	90	Ge⊘	A1gj
67#	OA91	115	30m	1 0	275u	100	450u	100	60				50m	50	1.0	75	Ge⊘	A1cu
68#	OA95	115	30m	1.0	250u	100	430u	100	60				50m	.50	1.0	75	Ge⊘	A1cu
69#	SFD108A	115	30m	1 0	250u	100	100u	50	55	1 0p⊘	1 0		50m	500m	1.0	85S	Ge⊘	DO7
70#	MGD91	115	30m	3 3 △	275u	100						120m	35m			90J	Ge⊘	DO7
71	1N143	115 *	40m	1 0	100u	100						130m	85m	.75	1 0	90A	Ge⊘	A1sh
72	DR336	115 *	40m	1 0	8 0u	5 0	100u	50	25								Ge⊘	DO7
73	DR337	115 *	40m	1.0	5 0u	5 0	50u	50	25								Ge⊘	DO7
74	T5G	115 *	40m	1.0	100u	100				50p		80m	70m	40	1.0	90A	Ge⊘	A1
75	DR317	115 *	50m	1 0	50u	50											Ge⊘	DO7
76	1N502	115 *	100m	80	20u	100						80m	70m			90	Ge	DO7
77	1N453	115 *	100m	1 0	30u	30						130m				90A	Ge⊘	DO7
78	DR313	115 *	100m	1 0	2 0u	10	20u	50	25			80m	80m				Ge⊘	DO7
79	DR323	115 *	100m	1 0			200u	50	75			80m	80m				Ge⊘	DO7
80	DR324	115 *	100m	1 0			500u	50	75			80m	80m				Ge⊘	DO7
81	DR306	115 *	200m	1.0	100u	50						80m	100m				Ge⊘	DO7
82	DR308	115 *	200m	1.0	10u	10	50u	50	25			80m	100m				Ge†	DO7
83	DR328	115 *	300m	1 0	100u	50						80m	100m				Ge⊘	DO7
84	DR302	115 *	400m	1 0	100u	50						80m	100m				Ge⊘	DO7
85	DR309	115 *	400m	1 0	10u	10	50u	50	25			80m	100m				Ge⊘	DO7
86	1N215	120	90m	1 0	1 0u	120	50u	120	100A	4 2p	6 0	150m	11m			150A	Si*	C1
87	1N393	120	90m	1 0	1 0u	120	50u	120	100A			150m	11m			150A	Si	DO7
88	1N70	120 §	3 0m	1 0	25u	10	300u	50	25				30m			70	Ge	A1bz
89#	1S33	120	4 0m	1 0	350u	100							30m	300m	1.0	75J	Ge⊘	DO7
90#	SD38	120	4 0m	1 0	5 0u	3 0	500u	100	25				30m	350m		90A	Ge⊘	A1bw
91	1N351	120	20m	1 0	03u	100	5 0u	100	125				15m				Si	C12a
92#	HSP1013	120	50m	1.0	05u	100	5 0u	100	150			250m	90m	1 0	10m	175A	Si#$	A1y
93#	BAV19	120	100m	1.0	100n	100	15u	100	100J	1.5p	0 0	400m	200m	1 0	1.0	175J	Si$#	DO35
94#	BAY19	120	100m	1 0	10u	100	15u	100	100J	1.2p	10	400m	200m			150J	Si△	DO7
95#	BAY87	120	100m	1 0	10u	100	15u	100	100	.70p	10	250m	250m	2.0	1 0m	150	Si△	DO7
96▼#	BAW77	120	100m	1 3 △	30n	50	20u	50	150A			400m				200S	Si	DO35
97#	ZS20A	120	100m	1 5	05u	120	5 0u	120	100	4.0p	10	150m	100m			150A	Si*	C1a
98#	ZS20B	120	100m	1 5	50u	120	10u	120	100	4.0p	10	150m	100m			150A	Si*	C1a
99#	ZS51	120	200m	1 1	50u	120	5 0u	120	100	5 0p⊘	10	300m	200m			150A	Si	C1a
100#	106B6	120 *	400m	1 0	1 0u	100						400m	400m			100	Si△	DO7
101	TI56	120 ⊘	400m	1 0 △	1 0u	100						400m				100A	Si△	A31f
102	FD300	125	1 0m	680m	1 0n	125	3 0u	125	150	6.0p⊘	0.0	400m	150m	500m	1.0	150A	Si#	A1ce
103	1N70A	125 *	3 0m	1.0	25u	10	300u	50	25				30m	35	1.0	90A	Ge⊘	A9k
104	1N127A	125 *	3 0m	1 0	25u	10	300u	50	25				30m	30	1.0	90	Ge	DO7
105	1N303	125	3.0m	1 0	01u	10	30u	10	100	3 0p	10	150m	40m	30	1.0	150	Si⊘	DO7
106	1N38B	125 *	4 0m	1 0	6 0u	3 0	500u	100	25				50m	50	1 0	90	Ge⊘	A9k
107#	1S2092	125	4 0m	1 0	1 2u	100							100m	500m		150	Si	A1jw
108	JAN1N277	125 *	5 0m	.50 △	50u	50	250u	50	75				50m	1 0	8.3m	75A	Ge	A1dd
109	1N175	125	5 0m	1 0	50u	50											Ge	DO7
110	PD129	125	7 0m	1 0	25n	125	5 0u	125	150			25	30m			150	Si	A2

SYMBOLS AND CODES EXPLAINED IN INTERPRETER

3. DIODES

IN ORDER OF (1) PIV, (2) MIN. FWD. CURRENT, (3) Vf, and (4) TYPE No.

LINE No	TYPE No. [4]	PIV [1] (V)	MINIMUM FORWARD CURRENT 2 If (A)	3 @Vf (V)	MAXIMUM REVERSE CURRENT at 25°C Ir (A)	at Vr (V)	at SPECIFIED TEST CONDITIONS Ir (A)	at Vr (V)	TEMP. (°C)	CAPACITANCE CAP. (F)	at TEST VOLTS (V)	ABS. MAX. RATINGS AT 25°C DISS. (W)	AV REC FWD. CUR. (A)	SURGE CUR. PEAK 1 Cy (A)	PULSE WIDTH (s)	MAX. TEMP. (°C)	DESCRIPTION MAT.	DWG. No.
1	1N303A	125	12m	1 0	01u	10	30u	10	100	3 0p	10	150m	55m	40	1 0	150	SiØ	DO7
2	1N102	125	15m	1 0	3 0u	25											Ge	DO7
3	FD333	125 $	50m	89	3.0n	125	500n	125	100	10pØ	0 0	50	15	4 0	1 0u	150A	Si#	DO7
4	1N303B	125	50m	1 0	01u	10	30u	10	100	3 3p	10	150m	65m	50	1 0	150	SiØ	DO7
5	1N634	125 Ø	50m	1 0	35u	30	115u	100	25				100m	30	1 0	75	Ge	DO7
6#	EC401	125 Ø	50m	1 0	01u	75	1.0u	75	100	8 0pØ	0 0	250m	150m	.50	1 0	150A	Si#	DO7
7	1N277	125 *	100m	1 0	250u	50	75u	10	75			80m		.40	1.0	90	GeØ	DO7
8	1N307	125	100m	1 0	5 0u	10	90u	10	70	3 0p	10	150m	50m	50	1 0	70	GeØ	C3e
9	1N3576	125	100m	1 0	750p	125	300n	125	150			250m	150m			150A	Si	A31g
10	CD1142	125	10	1 0	1 0n	125	2 0u	125	150			20	15	.80	1 0	200	Si	A1ce
11#	MD136	125	100m	1 0	500n	100							100m	1 0	1 0	175J	Si*	DO7
12	USA55191/2	125	100m	1 0	5 0u	10	100u	100	25	2 0pØ	10	80m	75m	40	1 0	100	Ge	M273
13	1N567	125	150m	1 0	150u	100											Ge	DO7
14#	BAY73	125 Ø	20	1 0	5 0n	100	500n	100	125	8 0pØ	0 0	.50	15	1 0	1.0	150A	Si#	DO7
15	CD1148	125	20	1 0	5 0n	125	5 0u	125	150			20	.17	1 0	1 0	200	Si	A1sj
16	FD444	125	200m	1 1	50n	100	100u	100	150	2 5pØ	0 0	350m	175m	1 0	1 0	175J	Si#$	DO7
17	FDH444	125	200m	1 1	50n	100	100u	100	150	2.5pØ	0 0	450m	175m	1 0	1 0	175J	Si#$	DO35
18	FDN444	125	200m	1 1	50n	100	100u	100	150	2.5pØ	0 0	300m	100m	500m	1 0	175J	Si#$	DO34
19	1N484A	130	10	1 0	25n	125	15u	125	150			25	20	2 0	10m	200A	Si	DO7
20	1N484B	130	10	1 0	25n	125	5.0u	125	150			25	20	2 0	10m	200A	Si	DO7
21	1N484C	130	10	1 0	5.0n	125											Si	A1bz
22	1N484	130	100m	1 1	25u	125	30u	125	150			250m	100m	1 0	10m	200A	Si	DO7
23	RF300	130	100m	1 1	5 0n	50				500fØ	50	350m		500m	1 0	175	Si	DO34
24	CD1113	130	25	1 0	5 0n	130	5.0u	130	150	3 0p	6 0	20	20	1 0	1 0	200	Si	A1ce
25	1N3180	130	500m	1 5	5 0u	100	50u	100	100			750m				200S	Si	DO14
26#	OA130	135	50m	1 1	50u	120				5.0p	10	250m				175J	Si	A1ce
27	GD410	135 #	200m	1 0	30u	40	100u	100	25			80m		.40	1 0	100S	GeØ	DO7
28#	L1/2H	136	25m	8 4	7 5u△	88				10p	20		25m	1 0m	30	55A	Se	
29#	MQ1/2	136	25m	8 4	7 5u△	88				10p	20		25m	1 0m	30	55A	Se	
30#	P1/2H	136	25m	8.4	7 5u△	88				10p	20		25m	1.0m	30	55A	Se	
31#	Q1/2	136	25m	8 4	7 5u△	88				10p	20		25m	1 0m	30	55A	Se	
32#	R1/2H	136	25m	8 4	7 5u△	88				10p	20		25m	1 0m	30	55A	Se	
33#	T1/2	136	25m	8 4	7 5u△	88				10p	20		25m	1 0m	30	55A	Se	
34#	L3/2H	136	1 5m	7 0	24u△	88				30p	20		1 0m	6 0m	30	55A	Se	
35#	MQ3/2	136	1 5m	7 0	24u△	88				30p	20		1 0m	6 0m	30	55A	Se	
36#	P3/2H	136	1 5m	7 0	24u△	88				30p	20		1 0m	6 0m	30	55A	Se	
37#	Q3/2	136	1 5m	7.0	24u△	88				30p	20		1 0m	6.0m	30	55A	Se	
38#	R3/2H	136	1 5m	7 0	24u△	88				30p	20		1 0m	6 0m	30	55A	Se	
39#	T3/2	136	1 5m	7 0	24u△	88				30p	20		1 0m	6 0m	30	55A	Se	
40#	L6/2H	136	7 0m	6 2	120u△	88				250p	30		3 5m	28m	30	55A	Se	
41#	MQ6/2	136	7 0m	6 2	120u△	88				250p	30		3 5m	28m	30	55A	Se	
42#	P6/2H	136	7 0m	6 2	120u△	88				250p	30		3 5m	28m	30	55A	Se	
43#	Q6/2	136	7 0m	6 2	120u△	88				250p	30		3 5m	28m	30	55A	Se	
44#	R6/2H	136	7 0m	6 2	120u△	88				250p	30		3 5m	28m	30	55A	Se	
45#	T6/2	136	7 0m	6 2	120u△	88				250p	30		3 5m	28m	30	55A	Se	
46#	L8/2H	136	10m	5 6	300u△	88				500p	30		5.0m	40m	30	55A	Se	
47#	MQ8/2	136	10m	5 6	300u△	88				500p	30		5 0m	40m	30	55A	Se	
48#	P8/2H	136	10m	5 6	300u△	88				500p	30		5 0m	40m	30	55A	Se	
49#	Q8/2	136	10m	5 6	300u△	88				500p	30		5 0m	40m	30	55A	Se	
50#	R8/2H	136	10m	5 6	300u△	88				500p	30		5 0m	40m	30	55A	Se	
51#	T8/2	136	10m	5 6	300u△	88				500p	30		5 0m	40m	30	55A	Se	
52	1N1629	140	1 5m	3 0	27u	78	33u	78	100J				3 8m	80m	1 0	25A	SeØ	M204
53	1N61	140 △	5.0m	1 0	300u	100	700u	125	25				40m			75	Ge	A1sh
54	1N62	140	5 0m	1 0	700u	100											Ge	DO7
55#	1S450	140	5 0m	1 0	50u	10	200u	130	25				30m	20		85J	GeØ	C18c
56	1N1637	140	5 0m	3 0	108u	78	135u	78	100J				13m	25	1 0	25A	SeØ	M204
57	1N1642	140	11m	3 0	240u	78	300u	78	100J				28m	55	1 0	25A	SeØ	M204
58	1N216	150	70m	1 0	5 0u	150	100u	150	100A	3 8p	6 0	150m	9 5m			150A	Si*	C1
59	1N394	150	70m	1 0	5 0u	150	100u	150	100A			150m	9 5m			150A	Si	DO7
60	1N1847	150	1 0m	1 0									11m			150A	Si	C12a
61#	14P2	150	1 0m	1 0 △	50u		100u		125	40p	2 0		40m	12	1 0	125A	Si	DO7
62#	AD150	150	1 0m	1 0	50u	150	100u	150	150	40p	2 0	150m	40m	30	10m	170A	SiØ	DO7
63#	CG60H	150	3 0m	1 0	100u	100							30m			100J	GeØ	A1bj
64	MC464	150	3 0m	1 0	50u	125	30u	125	150			250m	25m			175A		A2c
65	MT464	150	3 0m	1 0	50u	125	30u	125	150			500m	25m			175A	Si	A60e
66	1N47	150	4 0m	1 0	500u	100							30m				Ge	A1sh
67	1N55	150 Ø	5 0m	1 0	800u	150						13		80	1 0u	90A	GeØ	DO7
68	1N458	150 *	7 0m	1 0	25n	125	5 0u	125	150	6 0p	0 0	20	55m	50	1 0	200	Si△	A1bz
69	1N622	150	7 0m	1 0	16u	150	16u	150	100							150S	Si	A1
70	1N5209	150	7 0m	1 0 △	25n	125n	5 0u	125	150			20	55m	80	2 0u	200S	Si	DO35
71♦	1N5606	150	7 0m	1 0 △	25n	125	5 0u	125	150	6 0pØ	0 0	250m				200S	Si	DO35
72	MC458	150	7 0m	1 0	25n	125	5 0u	125	150			.25	50m			175A		A2c
73	MT458	150	7 0m	1 0	25n	125	5 0u	125	150			50	50m			175A	Si	A60e
74▼	MPN3201	150	8 0m	800m			10u	150		440fØ	50	3 0 §	1 0			150	Si	F27x
75#	AE150	150	10m	1 0	50u	150	100u	150	150	.40p	2 0	150m	60m	.35	10m	170A	SiØ	DO7
76#	BAW32B	150	10m	1.0	100n	150	20u	150	125	400nØ	6 0		60m	120m	1 0	150S	Si	DO7
77	MCPD528A	150	10m	1 0	100n	125	5 0u	125	100			250m				150A	Si	M411
78	MCPD528B	150	10m	1 0	100n	125	5 0u	125	100			500m				150A	Si	M411a
79	MCPD528C	150	10m	1 0	100n	125	5 0u	125	100			500m				150A	Si	M277d
80#	CA150	150	15m	1.0	03u	10	50u	10	55A			150m	35m	1 0	10m	150A	Si*	C18d
81#	CB150	150	15m	1 0	10u	10	2 0u	10	55A			150m	35m	1 0	10m	150A	Si*	C18d
82#	MC19	150	30m	90	10u	150	5.0u	150	100	10pØ	75	250m	200m			150A	Si△§	DO7
83#	OA202	150	30m	90	10u	150	5 0u	150	100	10p	75		30m			125A	Si	A3
84#	SFD181	150	30m	1 1 △	100n	150	10u	150	125A	4 0pØ	0 0		80m			200S	Si#	DO7
85	DR209	150 *	40m	1.0	100u	100						80m	60m				GeØ	DO7
86	AM306A	150	50m	1 0	1 0n	125	3 0u	125	150	6 0pØ	0 0	500m	100m	600m	1 0	200S	Si△	DO7
87#	BA147/150	150	50m	1 0 △	1 5u	150	50u	100	100A			210m	100m			150J	Si	DO7
88	DR292	150 *	50m	1 0	10u	10	100u	100	25								GeØ	DO7
89	DR316	150 *	50m	1 0	100u	100											GeØ	DO7
90#	HS1007	150	50m	1 0	05u	150	5 0u	150	100			200m	90m			200	Si*	DO7
91#	HS1008	150	50m	1 0	10u	150						200m	90m			200	Si*	DO7
92#	HS1009	150	50m	1 0	20u	150						200m	90m			200	Si*	DO7
93#	24J2	150	60m	1 3 △	.10u	150	20u	150	125	40p	2 0		60m	12	1.0	125J	SiØ	DO7
94	1N458A	150 *	10	1 0	25n	125	5 0u	125	150A	5 0p	0 0	50	20	1 5	1 0	200	Si	A60p
95	1N464A	150 *	100m	1 0	50u	125	30u	125	150A			500m	200m			200	Si	A60p
96♦	1N5719	150	100m	1 0	1 0u	100				250fØ	100	250				150S	Si	A1tb
97#	0101	150 #	100m	1 0	10u	100						250m	125m	1 0		150J	Si*	C18f
98#	AC150	150	100m	1 0	50u	150	200u	150	150A	10p	2 0	150m	130m	1 0	10m	170A	Si*	DO7
99	AM303A	150	10	1 0	1 0n	125	3 0u	125	150	6 0pØ	0 0	50	15	1.0	1 0	200S	Si△	DO7
100	DR312	150 *	100m	1 0	5 0u	10	20u	100	25			80m	80m				GeØ	DO7
101	DR322	150 *	100m	1 0	200u	50						80m	80m				GeØ	DO7
102	DR325	150 *	100m	1 0			75u	10	75			80m	80m				GeØ	DO7
103#	HS1001	150	100m	1 0	05u	150	5 0u	150	100	5 0p	10	200m	100m			200	Si*	DO7
104#	HS1002	150	100m	1 0	10u	150				5 0p	10	200m	100m			200	Si*	DO7
105#	HS1003	150	100m	1 0	20u	150				5 0p	10	200m	100m			200	Si*	DO7
106	MC61	150	10	1 0	25n	125	5 0u	125	150				15					M409a
107	MC458A	150	10	1 0	25n	125	5 0u	125	150			25	15			175A		A2c
108	MC464A	150	100m	1 0	50u	125	30u	125	150			250m	150m			175A		A2c
109	MC484A	150	10	1 0	25n	125	15u	125	150			25	15			175A		A2c
110	MC484B	150	10	1 0	25n	125	5 0u	125	150			.25	15			175A		A2c

SYMBOLS AND CODES EXPLAINED IN INTERPRETER

3. DIODES

IN ORDER OF (1) PIV, (2) MIN. FWD. CURRENT, (3) Vf, and (4) TYPE No.

LINE No	4 TYPE No	1 PIV (V)	MINIMUM FORWARD CURRENT 2 If (A)	3 @Vf (V)	MAXIMUM REVERSE CURRENT at 25°C Ir (A)	at Vr (V)	at SPECIFIED TEST CONDITIONS Ir (A)	at Vr (V)	TEMP. (°C)	CAPACITANCE CAP. (F)	at TEST VOLTS (V)	ABS. MAX. RATINGS AT 25°C DISS. (W)	AV REC FWD. CUR. (A)	SURGE CUR. PEAK 1 Cy (A)	PULSE WIDTH (s)	MAX. TEMP. (°C)	DESCRIPTION MAT.	DWG. No.
1	MT458A	150	10	1 0	25n	125	5 0u	125	150			.50	.15			175A	Si	A60e
2	MT464A	150	100m	1 0	.50u	125	30u	125	150			500m	150m			175A	Si	A60e
3	MT484A	150	10	1 0	25n	125	15u	125	150			50	15			175A	Si	A60e
4	MT484B	150	10	1 0	25n	125	5 0u	125	150			50	15			175A	Si	A60e
5#	BAY45	150	100m	1 1	.10u	150				5.0p	5.0						Si	A171f
6	MC484	150	100m	1 1	.25u	125	30u	125	150			250m	150m			175A		A2c
7	MT484	150	100m	1 1	.25u	125	30u	125	150			500m	150m			175A	Si	A60e
8#	BAY33	150 †	100m	2 7	10u△	150				15p⊘	0 0	270m	160m			175J	Si#	DO7
9	1N3595	150 *	200m⊘	1 0	1.0n	125	500n	125	125	8.0p⊘	0 0	500m	150m	500m	1.0	175A	Si#	DO7
10	AM300A	150	20	1 0	1 0n	125	3.0u	125	150	6.0p⊘	0 0	.50	.30	2.0	1 0	200S	Si△	DO7
11	DR305	150 *	200m	1.0	100u	50						80m	100m				Ge∅	DO7
12	DR321	150 *	200m	1 0			125u	50	75			80m	100m				Ge∅	DO7
13	DR379	150 *	200m	1 0	100u	50	50u	20	50			80m	100m				Ge∅	DO7
14	FD400	150	200m	1 0	100n	150	100u	150	150	2.0p⊘	0.0	400m	250m	1 0	1 0	175J	Si#$	DO7
15	FDH400	150	200m	1 0	100n	150	100u	150	150	2.0p⊘	0 0	500m	250m	1 0	1 0	175J	Si#$	DO35
16	FDN400	150	200m	1 0	100n	150	100u	150	150	2.0p⊘	0.0	350m	150m	500m	1 0	175J	Si#$	DO34
17	MC63	150	20	1 0	1 0n	125	3.0u	125	100				.40					M409a
18	MC170	150	.20	1 0	1.0n	125	3.0u	125	150			.25	.20			175A	Si	A2c
19	MCPD529A	150	200m	1 0	1.0n	125	3.0u	125	100			250m				150A	Si	M411
20	MCPD529B	150	200m	1 0	1.0n	125	3 0u	125	100			500m				150A	Si	M411a
21	MCPD529C	150	200m	1.0	1 0n	125	3.0u	125	100			500m				150A	Si	M277d
22#	MS3H	150	200m	1 0	1 0u	150	100u	150	150J			220m	250m			150J	Si	A1bh
23	MT170	150	20	1 0	1 0n	125	3.0u	125	150			50	20			175A	Si	A60e
24	PS615	150 *	200m	1 0	25u	125	30u	125	150A			500m	200m			200	Si	DO14
25	PS616	150 *	20	1 0	25n	125	15u	125	150A			.50	.20			200	Si	DO14
26	PS617	150 *	20	1.0	25n	125	5.0u	125	150A			50	20			200	Si	DO14
27	WD007	150	20	1 0	25n	125	30u	125	150			40	.20			150	Si	DO7
28	WD008	150	20	1 0	25n	125	15u	125	150			40	20			150	Si	DO7
29	WD009	150	20	1.0	25n	125	5 0u	125	150			.40	.20			150	Si	DO7
30#	1S922△	150	200m	1.2 △	100n	150	50u	150	150	3 5p	0.0		200m	4.0 △	20m	175A	Si	A60b
31▼#	BA189	150	200m	1.2 △	100n	150	10u	150	100A	1 8p	0 0	250m				200S	Si	DO35
32#	BAW12TF22	150	200m	1 2	100n	150	10u	150	100			250m	200m	6 0	1.0m	175	Si	DO35
33#	BAW16	150	.20	1 2	1 0n	50	100n	50	50	3 5p	0.0		20	4.0		150S	Si	DO35
34#	BAW18	150	20	1 2	5.0n	150				3 5p	0 0	.25	20	4 0		150S	Si	DO35
35#	TF22	150	200m	1 2	.10u	150	10u	150	100	3.5p	0.0	250m	200m	4 0	20m	150	Si	A60h
36#	LP3H	150 †	25	1 0	1 0n	150	10u	150	150A	6.0p⊘	1 0	.23	20			150A	Si#	DO7
37#	MS13H	150	25	1 0	100n	150	20u	150	150A	6.0p⊘	1 0	23	20			150S	Si#	DO7
38#	0501	150	250m	1 2	5 0u	150				20p	1.0	400m	250m	10	10m	125	Si	A1ce
39	DR327	150 *	300m	1.0	100u	50						80m	100m				Ge∅	DO7
40#	BA194	150	400m	1.0 △	200n	150	25u	150	100			600m	400m	2 0 §	1.2	175J	Si△	DO7
41▼	C6393	150	400m	1.0	200n	150	20u	150	100							175A	Si	M371
42▼	C6393A	150	400m	1 0	25n	150	10u	150	100							175A	Si	M371
43	DR301	150 *	400m	1.0	100u	50						80m	100m				Ge∅	DO7
44	MC023	150	400m	1 0	.20u	150	15u	150	150			300m	200m			175	Si	A2c
45	MC023A	150	.40	1 0	25n	150	5 0u	150	150			75	.50			175A	Si	A2d
46#	TF3	150	400m	1 0 △	200n	150	25u	150	100			600m	400m	2 0	1.2	175J	Si△	A31g
47	MC1521	150	500m	1 0	10u	150	10u	150	150			750m	500m			175A	Si	A2d
48#	BAY32	150 †	30	1.1	100m△	150				15p⊘	0 0	27	16			175J	Si#	DO7
49	CD13334	160	80m	1 0	5 0p△	10	50n△	50	150A	6.0p⊘	0 0	25	15	65	1.0	200S	Si	A1cj
50#	0111	160 #	100m	1 0	1 0u	100						250m	125m	1.0		150J	Si*	C18f
51	CD13332	160	10	1 0	3 0p△	10	05u△	50	150A	6.0p⊘	0.0	.25	175m	.75	1.0	200S	Si	A1cj
52	CD13333	160	10	1 0	5 0p△	10	05u△	50	150A	6.0p⊘	0 0	25	175m	.75	1 0	200S	Si	A1cj
53	CD13335	160	10	1 0	5 0p△	10	75n△	50	150A	6.0p⊘	0 0	25	175m	75	1 0	200S	Si	A1cj
54	CD13336	160	10	1 0	10p△	10	.10u△	50	150A	6.0p⊘	0.0	25	175m	.75	1 0	200S	Si	A1cj
55	CD13337	160	10	1 0	15p△	10	10u△	50	150A	6 0p⊘	0.0	25	175m	75	1 0	200S	Si	A1cj
56	CD13338	160	10	1 0	50p△	10	20u△	50	150A	6 0p⊘	0 0	25	175m	75	1 0	200S	Si	A1cj
57#	E656	160	100m	1 0	150u	100	15u	100	100	8.0 ⊘	0.0	250m	75m	500m	1 0	175	Si†	DO7
58	CD13339	160	20	1 0	10p△	10	10u△	50	150A	8 0p⊘	0.0	25	175m	75	1 0	200S	Si	A1cj
59	1N55A	170 *	4 0m	1 0	500u	150							50m	.50	1.0	90	Ge⊘	A9k
60	622C	170 ⊘	6 5m	4 0	200n	150	30u	150	100	1.2p	12	90m	15m			150A	Si	C3
61	PD134	170	10m	1 0	1 0u	120	40u	120	100				250m	30		150	Si	A2
62	1N352	170	20m	1 0	.05u	150	10u	150	125				15m				Si	C12a
63	1N464	175 *	3.0m	1 0	.50u	125	30u	125	150	6 0p	0 0	200m	40m	40	1.0	200	Si△	A1bz
64	PD130	175	3 0m	1 0	25n	175	5 0u	175	150				25	20		150	Si	A2
65#	1S2091⊘	175	4 0m	1 0	1 2u	150							100m	500m		150	Si	A1jw
66	1N458M	175 *	7 0m	1 0	.02t	125	5 0u	125	150			200m	55m			200	Si△	A2
67	1N451	175 *	50m	1 0	150u	150							60m			75	Ge	DO7
68	1N635	175 *	50m	1 0	175u	150							150m			75	Ge	DO7
69	DR315	175 *	50m	1 0	50u	100						80m					Ge∅	DO7
70#	HSP1007	175	50m	1 0	05u	150	5 0u	150	150			250m	90m	1 0	10m	175A	Si#$	A1y
71	1N3577	175	100m	1 0	750p	175	300n	175	150			250m	150m			150A	Si	A31g
72	CD1143	175	10	1 0	1.0n	175	2.0u	175	150			20	.15	80	1 0	200	Si	A1ce
73	DR310	175 *	100m	1 0	50u	100						80m	80m				Ge∅	DO7
74	DR311	175 *	100m	1 0	100u	100						80m					Ge∅	DO7
75#	HSP1001	175	100m	1 0	.05u	150	5 0u	150	150			250m	120m	1 0	10m	175A	Si#$	A1y
76	CD1149	175	20	1 0	5.0n	175	5.0u	125	150			20	.17	1 0	1 0	200	Si	A1sj
77	DR669	175 *	20	1 0	25n	125	5.0u	125	150A					1 0	10n	150A	Si	DO7
78	DR272	175 *	400m	1.0	20u	100						80m	100m				Ge∅	DO7
79	GSM483	175	400m	1.0	1.0u	150	100u	150	150			250m	200m			150	Si	A2j
80	JAN1N5558	175	100	4 8 △	5 0u	175								200	8 3m	175A	Si	A220
81♦	JAN1N5613	175	100	4 8 △	5.0u	175								200	8 3m	175A	Si	A248k
82	1N55B	180 §	5 0m	1.0	500u	150							30m	.25	1 0	90	Ge	DO7
83	1N217	180	6.5m	4 0	5 0u	180	100u	180	100A	3 5p	6.0	150m	9.0m			150A	Si*	C1
84	1N485A	180	.10	1 0	25n	175	15u	175	150			.25	.20	2 0	10m	200A	Si	DO7
85	1N485C	180	10	1 0	5 0n	175											Si	A1bz
86#	BAV20	180	100m	1.0	100n	150	15u	150	100J	1.5p	0 0	400m	200m	1 0	1.0	175J	Si$#	DO35
87	BAX15	180	100m	1 0	200n	150	10u	150	100J	20p⊘	0 0		250m	30	10u	200J	Si	
88#	BAY20	180	100m	1 0	.10u	150	25u	150	100J	1.2p	10	400m	200m			150J	Si△	DO7
89	1N485	180	100m	1 1	.25u	175	30u	175	150			250m	100m	1.0	10m	200A	Si	DO7
90	CD1114	180	25	1 0	5 0n	180	5 0u	180	150	3.0p	6 0	20	20	1 0	1.0	200	Si	A1ce
91	1N1630	185	1 5m	4 0	27u	104	33u	104	100J				3.8m	80m	1.0	25A	Se⊘	M204
92	1N1638	185	5 0m	4 0	108u	104	135u	104	100J				13m	25	1 0	25A	Se⊘	M204
93#	13P2	200	1 0m	1 0 △	50u		100u		125	.40p	2 0		40m	12	1.0	125A	Si	DO7
94#	AD200	200	1 0m	1 0	50u	200	100u	200	150	.40p	2 0	150m	40m	.30	10m	170A	Si⊘	DO7
95	MC463	200	1.0m	1 0	50u	175	30u	175	150			250m	25m			175A		A2c
96	MT463	200	1.0m	1 0	50u	175	30u	175	150			500m	25m			175A	Si	A60e
97	1N459	200 *	3 0m	1 0	25n	175	5.0u	175	150	4 0	0 0	.20	40m	40	1 0	200	Si△	A1bz
98	1N5210	200	3 0m	1 0 △	25n	175	5.0u	175	150			200m	40m	700m	2.0u	200S	Si	DO35
99♦	1N5607	200	3.0m	1 0 △	25n	175	5.0u	175	150	4 0p⊘	0 0	250m				200S	Si	DO35
100	MC459	200	3 0m	1 0	25n	175	5 0u	175	150			25	25m			175A		A2c
101	MT459	200	3 0m	1 0	25n	175	5 0u	175	150			.50	25m			175A	Si	A60e
102	1N39B	200	4 0m	1.0	100u	100	600u	200	25				50m	50	1 0	90	Ge⊘	DO7
103♦	MPN3202	200	8 0m	800m			10u	200		400f⊘	50	3 0 §	1 0			150	Si	F27x
104	1N902	200	10m	1 0	1 0u	100	15u	100	100			250m				150	Si△	A2
105#	12P2	200	10m	1 0 △	50u		100u		125	40p	2.0		60m	.18	1 0	125A	Si	DO7
106#	AE200	200	10m	1 0	50u	200	100u	200	150	.40p	2.0	150m	60m	.35	10m	170A	Si⊘	DO7
107#	BAW32A	200	10m	1 0	100n	200	20u	200	125	400n⊘	6 0		60m	120m	1 0	150S	Si	DO7
108	PD108	200	10m	1 0	5 0u	100	25u	10	100	2.0p	10	25		2.0	1.0u	150	Si△	A2
109#	CA200	200	15m	1 0	03u	10	50u	10	55A			150m	35m	1 0	10m	150A	Si*	C18d
110#	CB200△	200	15m	1 0	100n	10	2 0u	10	55A			150m	35m	1.0	10m	150A	Si*	C18d

SYMBOLS AND CODES EXPLAINED IN INTERPRETER

3. DIODES

IN ORDER OF (1) PIV, (2) MIN. FWD. CURRENT, (3) Vf, and (4) TYPE No.

LINE No.	4 TYPE No	1 PIV (V)	MINIMUM FORWARD CURRENT 2 If (A)	3 @Vf (V)	MAXIMUM REVERSE CURRENT at 25°C Ir (A)	at Vr (V)	at SPECIFIED TEST CONDITIONS Ir (A)	at Vr (V)	TEMP. (°C)	CAPACITANCE CAP. (F)	at TEST VOLTS (V)	ABS. MAX. RATINGS AT 25°C DISS. (W)	AV REC FWD. CUR. (A)	SURGE CUR. PEAK 1 Cy (A)	PULSE WIDTH (s)	MAX. TEMP. (°C)	DESCRIPTION MAT.	DWG. No.
1#	BA129	200 ∅	50m	1 0 △	.01u	180	5 0u	180	100	6 0p∅	0.0	250m	150m	50	1 0	125A	Si#	DO7
2#	23J2	200	60m	1 3 △	10u	200	20u	200	125	.40p	2.0		60m	12	1 0	125J	Si∅	DO7
3	1N459A	200 *	10	1 0	25n	175	5.0u	175	150A	5 0p	0 0	.50	.20	1 5	1 0	200	Si	A60p
4	1N463A	200 *	100m	1 0	.50u	175	30u	175	150A			500m	200m			200	Si	A60p
5	1N485B	200 *	.10	1 0	25n	175	5.0u	175	150			.25	20	2 0	10m	200A	Si	A1cw
6	JAN1N485B	200	10	1 0 △	25n	180	5 0u	180	150A				20	2 0	8 0m	200A	Si	DO7
7	1N5195	200	10	1 0 △	25n	180	5.0u	180	150			25	20	2 0	8 3m	200S	Si	DO35
8	JAN1N5195	200	10	1 0 △	25n	180	5.0u	180	150				20	2 0	8 0m	200A	Si	A9c
9#	1S182	200	100m	1 0	3 0u	200											Si△	DO7
10	MC62	200	10	1 0	25n	175	5.0u	175	150				15					M409a
11	MC459A	200	10	1 0	25n	175	5.0u	175	150			25	.15			175A		A2c
12	MC463A	200	100m	1 0	50u	175	30u	175	150			250m	150m			175A		A2c
13	MC485A	200	10	1 0	25n	175	15u	175	150			25	15			175A		A2c
14	MC485B	200	10	1 0	25n	175	5.0u	175	150			.25	15			175A		A2c
15	MT459A	200	10	1 0	25n	175	5 0u	175	150			50	.15			175A	Si	A60e
16	MT463A	200	100m	1 0	50u	175	30u	175	150			500m	150m			175A	Si	A60e
17	MT485A	200	10	1 0	25n	175	15u	175	150			50	15			175A	Si	A60e
18	MT485B	200	10	1 0	25n	175	5 0u	175	150			50	15			175A	Si	A60e
19	TMD45	200	.10	1 0	250n	200	30u	200	100	4 0p	10	10	75m	40	1 0m	150A	Si△	A2l
20	MC485	200	100m	1 1	25u	175	30u	175	150			250m	150m			175A		A2c
21	MT485	200	100m	1 1	25u	175	30u	175	150			500m	150m			175A	Si	A60e
22#	ZS21	200	100m	1 5	50u	200	5 0u	200	100	2 0p	10	150m	100m	20	10m	150A	Si	C1a
23#	1S132△	200	200m	1 0 △			50u	200	100				200m	1 5	1.0	100A	Si	A1
24#	HS1020	200	200m	1 0	02u	200	2 0u	200	100	5 0p	10	200m	165m			200	Si*	DO7
25#	HSP1020	200	200m	1 0	20n	200	2 0u	200	100	2 5	0 0	500m	165m	2 0	10m	175	Si	DO35
26#	MS4H	200	200m	1 0	1 0u	200	100u	200	150J			220m	250m			150J	Si	A1bh
27	PS621	200 *	200m	1 0	25u	175	30u	175	150A			500m	200m			200	Si	DO14
28	PS622	200 *	20	1 0	25n	175	15u	175	150A			.50	20			200	Si	DO14
29	PS623	200 *	20	1 0	25n	175	5 0u	175	150A			.50	.20			200	Si	DO14
30	WD010	200	200m	1 0	25u	175	30u	175	150			400m	200m			150	Si	DO7
31	WD011	200	20	1 0	25n	175	15u	175	150			.40	.20			150	Si	DO7
32	WD012	200	20	1 0	25n	175	5 0u	175	150			40	.20			150	Si	DO7
33#	ZS52	200	200m	1 1	50u	200	5 0u	200	100	5 0p∅	10	300m	200m			150A	Si	C1a
34#	1S923△	200	200m	1 2 △	100n	200	50u	200	150	3 5p	0 0		200m	4 0 △	20m	175A	Si	A60b
35▼#	BA190	200	200m	1 2 △	100n	200	10u	200	100A	1 8p	0 0	250m				200S	Si	DO35
36#	BAW13TF23	200	200m	1 2	100n	200	10u	200	100			250m	200m	6 0	1 0m	175	Si	DO35
37#	BAW17	200	200m	1 2	00t	150	20u	150	50	3 5p	0 0		200m	4 0		150S	Si	DO35
38#	TF23	200	200m	1 2	10u	200	10u	200	100	3 5p	0.0	250m	200m	4 0	20m	150	Si	A60h
39#	LP4H	200 †	22	1 0	1 0n	200	10u	200	150A	6.0p∅	1 0	27m	.20			150A	Si#	DO7
40#	MS14H	200	225m	1 0	100n	200	20u	200	150A	6 0p∅	1 0	237m	205m			150S	Si#	DO7
41#	ZS92	200	250m	1 1	25u	200	15u	200	100	12p∅	10	275m	250m	5 0	10m	150A	Si	DO7
42#	ZS122	200	250m	1 1	5.0u	200	50u	200	100	12p∅	10	275m	250m	5 0	10m	100A	Si△	DO7
43#	BAW52	200 ∅	30	1 0 △	50n	160	50u	160	125	7 0p∅	0 0	50	.19	4 0	100u	150J	Si∅	DO7
44	40SG2	200	40	1 0	100n	200	5 0u	200	150	10p∅	1 0	45	.40	3 0	8 0m	175A	Si	A1da
45#	107B6	200 *	400m	1 0	1 0u	150						400m	400m			100	Si△	DO7
46▼	C6394	200	400m	1 0	200n	200	20u	200	100							175A	Si	M371
47▼	C6394A	200	400m	1 0	.25n	200	10u	200	100							175A	Si	M371
48	MC020	200	400m	1 0	.20u	200	15u	200	150			300m	200m			175A	Si	A2c
49	MC020A	200	40	1 0	25n	200	5.0u	200	150			.30	20			175A	Si	A2c
50	TI57	200 ∅	400m	1 0 △	1 0u	150						400m				100A	Si△	A31f
51#	ZS102	200	400m	1 0	20u	200	15u	200	100	12p∅	10	400m	400m	5 0	10m	175A	Si	DO7
52▼#	1B05J20	200	400m	2 0 △	2 0u	200										100A		M534a
53	MC1522	200	500m	1 0	.10u	200	10u	200	150			750m	500m			175A	Si	A2d
54#	ZS32A	200	500m	1 1	20u	200	15u	200	100	15p	10	650m	500m			160A	Si△	A44
55#	ZS32B	200	500m	1 1	5 0u	200	50u	200	100	15p	10	650m	500m			160A	Si△	A44
56	HGR20	200	1 0	1 1	10u	200	50u	200	100				1 0m§	30	8 3m	175A	Si	A196a
57▼#	1B08T20	200	2 0	2 5 △	2 0u	200										150A		M631
58	1N5624	200	3 0	950m△			300u	200	175A				3 0 §	125 §		175A	Si	A249
59▼#	1B20K20	200	4 0	2 5 △	5 0u	200										150A		M534b
60#	1S1465	200	5 0	75	5 0m	150	55m	150	7 5A			14	10	30		75J	Ge	TO66
61▼#	3B30L20	200	6 0	2 5 △	4 0u	200										150A		M633
62▼#	1B40K20	200	10	2 5 △	10u	200										150A		M534b
63▼#	3B60L20	200	12	2 3 △	10u	200										150A		M633
64▼#	1B100M20	200	20	2 5 △	5.0u	200										150A		M632
65#	RD2015	200	50 $	1 0			3 0	200	125C				15	350	10m	150C	Si△	DO5
66#	L1/3H	204	250u	12	7 5u△	1 3				7 0p	30		250u	1 0m	30	55A	Se	
67#	MQ1/3	204	250u	12	7 5u△	1 3				7 0p	30		250u	1 0m	30	55A	Se	
68#	P1/3H	204	250u	12	7 5u△	1 3				7 0p	30		250u	1 0m	30	55A	Se	
69#	Q1/3	204	250u	12	7 5u△	1.3				7 0p	30		250u	1 0m	30	55A	Se	
70#	R1/3H	204	250u	12	7 5u△	1 3				7 0p	30		250u	1 0m	30	55A	Se	
71#	T1/3	204	250u	12	7 5u△	1.3				7 0p	30		250u	1 0m	30	55A	Se	
72#	L3/3H	204	1 5m	10	24u△	1 3				20p	30		1 0m	6 0m	30	55A	Se	
73#	MQ3/3	204	1 5m	10	24u△	1 3				20p	30		1 0m	6 0m	30	55A	Se	
74#	P3/3H	204	1 5m	10	24u△	1 3				20p	30		1.0m	6 0m	30	55A	Se	
75#	Q3/3	204	1 5m	10	24u△	1 3				20p	30		1 0m	6 0m	30	55A	Se	
76#	R3/3H	204	1 5m	10	24u△	132				20p	30		1 0m	6 0m		55A	Se	
77#	T3/3	204	1 5m	10	24u△	132				20p	30		1 0m	6 0m		55A	Se	
78#	L6/3H	204	7 0m	9 3	120u△	132				167p	30		3 5m	28m	30	55A	Se	
79#	MQ6/3	204	7 0m	9 3	120u△	132				167p	30		3.5m	28m	30	55A	Se	
80#	P6/3H	204	7 0m	9.3	120u△	132				167p	30		3 5m	28m	30	55A	Se	
81#	Q6/3	204	7 0m	9 3	120u△	132				167p	30		3 5m	28m	30	55A	Se	
82#	R6/3H	204	7 0m	9 3	120u△	132				167p	30		3 5m	28m	30	55A	Se	
83#	T6/3	204	7 0m	9 3	120u△	132				167p	30		3.5m	28m	30	55A	Se	
84#	L8/3H	204	10m	8.4	300u△	132				333p	30		5 0m	40m	30	55A	Se	
85#	MQ8/3	204	10m	8 4	300u△	132				333p	30		5.0m	40m	30	55A	Se	
86#	P8/3H	204	10m	8 4	300u△	132				333p	30		5 0m	40m	30	55A	Se	
87#	Q8/3	204	10m	8 4	300u△	132				333p	30		5 0m	40m	30	55A	Se	
88#	R8/3H	204	10m	8 4	300u△	132				333p	30		5 0m	40m	30	55A	Se	
89#	T8/3	204	10m	8 4	300u△	132				333p	30		5 0m	40m	30	55A	Se	
90	1N39	210 △	3 0m	1 0	100u	100	600u	200	25	1 0p			50m	50	1 0	90	Ge	DO7
91	1N218	220	6 0m	4 0	5 0u	220	100u	220	100A	3 2p	6.0	150m	8 0m			150A	Si*	C1
92	1N1848	220	6 5m	4 0									9 0m			150A	Si	C12a
93#	BA147/220	220	50m	1 0 △	2 0u	220	75u	150	100A			210m	100m			150J	Si	DO7
94	DR304	220 *	200m	1 0	500u	150						80m	100m				Ge∅	DO7
95	1N302	225	1 0m	1 0	01u	10	50u	10	100	2 0p	10	150m	30m	25	1 0	150	Si∅	C3e
96	1N302A	225	5 0m	1 0	.01u	10	.50u	10	100	2 0p	10	150m	40m	35	1 0	150	Si∅	C3e
97	1N302B	225	20m	1 0	.01u	10	.50u	10	100	2.3p	10	150m	55m	40	1 0	150	Si∅	C3e
98	1N486A	225	100m	1 0	05u	25	25u	225	150			250m	200m	2 0	10m	200A	Si	DO7
99	1N3578	225	100m	1 0	750p	225	300n	225	150			250m	150m			150A	Si	A31g
100	1N486	225	100m	1 1	25u	225	50u	225	150			250m	100m	1 0	10m	200A	Si	DO7
101	CD1115	225	250m	1 0	5 0n	225	5 0u	225	150	3 0p	6 0	200m	200m	1 0	1 0	200	Si	A1ce
102	1N645A	225	400m	1 0	.20u	225	15u	225	100			600m	400m	3 0	1 0	150A	Si	A1
103	1N645B	225	40	1 0	5 0m	60	25n	225	25			60	40				Si	DO7
104	1N4541	225	400m	1 0	.02u	225	5 0u	225	150				400m			200S	Si	DO14
105	PS4560	225	400m	1 0	20u	225	50u	225	150			600m	400m			150A	Si*	A1
106	PS5300	225	400m	1 0	02u	225	10u	225	150			600m	400m			200S	Si*	A60p
107	1N463	230 *	1 0m	1.0	.50u	175	300u	175	150	4.0p	0 0	200m	30m	40	1 0	200	Si△	A1bz
108	1N459M	230 *	3 0m	1 0	25n	175	5 0u	175	150			20	40m			200	Si△	A2
109	1N39A	230 *	5 0m	1 0	65u	100	325u	100	25			200m	50m			75	Ge	DO7
110	1N932	230 *	20m	1 0	100u	250							250m	1.0	1 0		Si	DO7

SYMBOLS AND CODES EXPLAINED IN INTERPRETER

3. DIODES

IN ORDER OF (1) PIV, (2) MIN. FWD. CURRENT, (3) Vf, and (4) TYPE No.

LINE No	4 TYPE No.	1 PIV (V)	MINIMUM FORWARD CURRENT 2 If (A)	3 @Vf (V)	MAXIMUM REVERSE CURRENT at 25°C Ir (A)	at Vr (V)	at SPECIFIED TEST CONDITIONS Ir (A)	at Vr (V)	TEMP. (°C)	CAPACITANCE CAP. (F)	at TEST VOLTS (V)	ABS. MAX. RATINGS AT 25°C DISS. (W)	AV REC FWD. CUR. (A)	SURGE CUR. PEAK 1 Cy (A)	PULSE WIDTH (s)	MAX. TEMP. (°C)	DESCRIPTION MAT.	DWG. No.
1	MC678	230	200m	1 0	1 0u	200	200u	200	150			250m	200m			175A		A2c
2	1N1631	240	1 5m	5 0	27u	130	33u	130	100J				3 8m	80m	1.0	25A	Se☑	M204
3	1N1639	240	5 0m	5.0	108u	130	135u	130	100J				13m	25	1 0	25A	Se☑	M204
4	1N3179	240	100m	1 0	10u	200	75u	200	100			400m				200S	Si	DO14
5	DR670	240 *	20	1 0	25n	175	5 0u	175	150A					1 0	10m	150A	Si	DO7
6	PS627	240 △	200m	1 0	25u	225	50u	225	150A			500m	200m			200	Si	DO14
7	PS628	240 △	200m	1 0	.05u	225	25u	225	150A			500m	200m			200	Si	DO14
8	PS629	240 △	200m	1.0	05u	225	10u	225	150A			500m	200m			200	Si	DO14
9	624C	250 ☑	3 0m	4 0	400n	220	20u	220	71	1.0p	12	80m	10m			150A	Si	C3
10	PD135	250	10m	1.0	1 0u	240	40u	240	100			250m	30m			150	Si	A2
11#	CA250	250	15m	1.0	03u	10	.50u	10	55A			150m	35m	1.0	10m	150A	Si*	C18d
12#	CB250	250	15m	1 0	10u	10	2.0u	10	55A			150m	35m	1.0	10m	150A	Si*	C18d
13	1N486B	250 *	100m	1 0	.05u	225	10u	25	150			250m	200m	2.0	10m	200A	Si	A1cw
14	JAN1N486B	250	10	1.0 △	25n	225	5.0u	225	150A				.20	2.0	8.0m	200A	Si	DO7
15	1N5196	250	10	1.0 △	25n	225	5.0u	225	150			.25	20	2.0	8.3m	200S	Si	DO35
16	JAN1N5196	250	10	1 0 △	25n	225	5 0u	225	150				20	2 0	8.0m	200A	Si	A9c
17#	BAV21	250	100m	1 0	100n	200	15u	200	100J	1.5p	0 0	400m	200m	1 0	1 0	175J	Si$#	DO35
18	MC486A	250	.10	1 0	25n	225	15u	225	150			.25	.15			175A		A2c
19	MC486B	250	10	1 0	25n	225	5 0u	225	150			.25	15			175A		A2c
20#	MD137	250	100m	1 0	500n	200							100m	1.0	1.0	175J	Si*	DO7
21	MT486A	250	10	1 0	25n	225	15u	225	150			.50	.15			175A	Si	A60e
22	MT486B	250	10	1 0	25n	225	5.0u	225	150			.50	15			175A	Si	A60e
23	MC486	250	100m	1 1	25u	225	30u	225	150			250m	150m			175A		A2c
24	MT486	250	100m	1 1	25u	225	30u	225	150			500m	150m			175A	Si	A60e
25	CD1151	250	20	1 0	5 0n	250	5 0u	250	150			.20	17	1 0	1 0	200	Si	A1sj
26	WD013	250	200m	1 0	25u	25	50u	225	150			400m	200m			150	Si	DO7
27	WD014	250	20	1.0	25n	225	25u	225	150			.40	.20			150	Si	DO7
28	WD015	250	20	1 0	25n	225	10u	225	150			.40	20			150	Si	DO7
29	1N645J	250	40	1 0	25n	250	15u	225	150			45	40			175A	Si	A1da
30▼	C6395	250	400m	1 0	200n	250	20u	250	100							175A	Si	M371
31▼	C6395A	250	400m	1 0	25n	250	10u	250	100							175A	Si	M371
32	DR671	265 *	200m	1 0	.05u	225	25u	225	150A					1 0	10m	150A	Si	DO7
33	1N1632	270	1 5m	6 0	27u	156	33u	156	100J				3 8m	80m	1 0	25A	Se☑	M204
34	1N219	270	3 0m	4 0	5 0u	270	100u	270	100A	3.0p	6 0	150m	7.5m			150A	Si*	C1
35#	0102	270 §	100m	1.0	10u	200						250m	125m	1.0		150J	Si*	C18f
36#	0112	270 §	100m	1 0	1 0u	200						250m	125m	1.0		150J	Si*	C18f
37#	108B6	270 #	400m	1.0	1 0u	175						400m	400m			100	Si△	DO7
38	MC64	270	40	1.0	25n	225	150u	225	150				.40					M409a
39	TI58	270 ☑	400m	1 0 △	1 0u	175						400m				100A	Si△	A31f
40#	L1/4H	272	250u	16	7 5u△	176				5 0p	40		250u	1 0m	30	55A	Se	
41#	MQ1/4	272	250u	16	7 5u△	176				5.0p	40		250u	1.0m	30	55A	Se	
42#	P1/4H	272	250u	16	7 5u△	176				5.0p	40		250u	1.0m	30	55A	Se	
43#	Q1/4	272	250u	16	7 5u△	176				5.0p	40		250u	1.0m	30	55A	Se	
44#	R1/4H	272	250u	16	7 5u△	176				5 0p	40		250u	1.0m	30	55A	Se	
45#	T1/4	272	25m	16 k	7 5u△	176				5.0p	40		.25m	1.0m	30	55A	Se	
46#	L3/4H	272	1 5m	14	24u△	176				15p	40		1.0m	6.0m	30	55A	Se	
47#	MQ3/4	272	1 5m	14	24u△	176				15p	40		1 0m	6.0m	30	55A	Se	
48#	P3/4H	272	1 5m	14	24u△	176				15p	40		1 0m	6.0m	30	55A	Se	
49#	Q3/4	272	1 5m	14	24u△	176				15p	40		1 0m	6.0m	30	55A	Se	
50#	R3/4H	272	1 5m	14	24u△	176				15p	40		1 0m	6.0m	30	55A	Se	
51#	T3/4	272	1.5m	14	24u△	176				15p	40		1 0m	6 0m	30	55A	Se	
52#	L6/4H	272	7 0m	12	120u△	176				125p	40		3 5m	28m	30	55A	Se	
53#	MQ6/4	272	7 0m	12	120u△	176				125p	40		3 5m	28m	30	55A	Se	
54#	P6/4H	272	7.0m	12	120u△	176				125p	40		3 5m	28m	30	55A	Se	
55#	Q6/4	272	7.0m	12	120u△	176				125p	40		3 5m	28m	30	55A	Se	
56#	R6/4H	272	7 0m	12	120u△	176				125p	40		3 5m	28m	30	55A	Se	
57#	T6/4	272	7 0m	12	120u△	176				125p	40		3 5m	28m	30	55A	Se	
58#	L8/4H	272	10m	11	300u△	176				250p	40		5 0m	40m	30	55A	Se	
59#	MQ8/4	272	10m	11	300u△	176				250p	40		5.0m	40m	30	55A	Se	
60#	P8/4H	272	10m	11	300u△	176				250p	40		5.0m	40m	30	55A	Se	
61#	Q8/4	272	10m	11	300u△	176				250p	40		5.0m	40m	30	55A	Se	
62#	R8/4H	272	10m	11	300u△	176				250p	40		5 0m	40m	30	55A	Se	
63#	T8/4	272	10m	11	300u△	176				250p	40		5 0m	40m	30	55A	Se	
64	1N1634	275	1 5m	8 0	27u	208	33u	208	100J				3 8m	80m	1.0	25A	Se☑	M204
65	1N566	275	20m	1 0	200u	200											Ge	DO7
66	1N3579	275	100m	1 0	750p	275	300n	275	150			250m	150m			150A	Si	A31g
67	1N59	280 △	3 0m	1 0	800u	250							50m			90	Ge	DO7
68#	BA148	300	2 0m	1 5 △			200u	300	125	4.0p	150			15	10m	125J	Si△	DO14
69	PD110	300	5.0m	1 0	1 0u	300						250m	20m			150	Si	A2
70#	MC51%	300	30m	900m△	100n	300	5.0u	300	100A	10p☑	750m		200m	2 0	10m	150A	Si△	DO7
71#	BA147/300	300	50m	1 0 △	3 0u	300	100u	200	100A			210m	100m			150J	Si	DO7
72	DR699	300 *	50m	1 0	1 0u	200						150m	100m				Si	DO7
73	1N487A	300	100m	1 0	10u	300	25u	300	150			250m	200m	2.0	10m	200A	Si	DO7
74	1N487B	300 $	100m	1 0 △	100n	300	10u	300	150A			250m	200m	2 0	10m	200A	Si	A1cw
75#	1S183	300	100m	1 0	3 0u	300											Si△	DO7
76#	BA145	300	100m	1 0 △			10u	300	75	4.0p	150			1.0	10m	125J	Si△	DO14
77	1N487	300	100m	1 1	25u	300	50u	300	150			250m	100m	1 0	10m	200A	Si	DO7
78#	BA105	300	100m	1 1	1 0u	300				10p☑	5.0	210m				150J	Si*	C1g
79#	BAY46	300	100m	1 1	10u	300				4.0p	5 0						Si	A171f
80	DR826	300 *	100m	1 5			150u	180	100								Si	DO7
81#	ZS22	300	100m	1 5	50u	300	5.0u	300	100	2.0p	10	150m	100m	.20	10m	150A	Si	C1a
82#	HS3103	300	200m	1 0	20u	300						200m	165m			200A	Si*	DO7
83	MCPD531A	300	200m	1 0	200n	300	10u	300	100			250m				150A	Si	M411
84	MCPD531B	300	200m	1 0	200n	300	10u	300	100			500m				150A	Si	M411a
85	MCPD531C	300	200m	1 0	200n	300	10u	300	100			500m				150A	Si	M277d
86#	MS5H	300	200m	1 0	1 0u	300	100u	300	150J			220m	250m			150J	Si	A1bh
87#	ZS53	300	200m	1 1	50u	300	5.0u	300	100	5 0p	10	300m	200m			150A	Si	C1a
88#	BAW14	300	200m	1 2	10u	300	10u	300	100			250m	200m	6.0	1.0m	175	Si	DO35
89#	BAW14TF24	300	200m	1 2	10u	300	10u	300	100	3.8p	0 0	280m	200m	4.0	20m	150	Si	DO35
90#	TF24	300	200m	1 2	100n	300	10u	300	100	3.8p		280m	200m	4.0	20m	175	Si	DO35
91	CD1116	300	25	1 0	5 0n	300	5 0u	300	150	3.0p	6 0	.20	20	1.0m	1 0	200	Si	A1ce
92#	ZS123	300	250m	1 1	5 0u	300	50u	300	100	12p☑	10	275m	250m	5 0	10m	100A	Si△	DO7
93#	0502	300	250m	1.2	5 0u	300				10p	1 0	400m	250m	10	10m	125	Si	A1ce
94	40SG3	300	40	1 0	100n	300	5 0u	300	150	10p☑	1 0	.45	40	3.0	8.0m	175A	Si	A1da
95▼	C6396	300	400m	1 0	200n	300	20u	300	100							175A	Si	M371
96▼	C6396A	300	400m	1 0	25n	300	10u	300	100							175A	Si	M371
97	MC030	300	400m	1 0	.20u	300	15u	300	150			300m	200m			175A	Si	A2c
98	MC030A	300	400m	1 0	02t	300	5 0u	300	150			300m	200m			175A	Si	A2c
99#	MS35H	300	400m	1 0 △	20u	300	15u	300	100C	9 0p☑	12	600m	400m	3 0	1 0	150A	Si△	DO7
100	PS5301	300	400m	1 0	02u	300	10u	300	150			600m	400m			200S	Si*	A60p
101#	ZS103	300	400m	1 0	20u	300	15u	300	100	12p☑	10	400m	400m	5 0	10m	175A	Si	DO7
102	MC1523	300	500m	1 0	10u	300	10u	300	150			750m	500m			175A	Si	A2d
103#	ZS33A	300	500m	1 1	20u	300	15u	300	100	15p	10	650m	500m			160A	Si△	A44
104#	ZS33B	300	500m	1 1	5 0u	300	50u	300	100	15p	10	650m	500m			160A	Si△	A44
105	HGR30	300	1 0	1 1	10u	300	50u	300	100				1 0m§	30	8.3m	175A	Si	A196a
106▼#	1B100M30	300	20	2 5 △	5 0u	300										150A		M632
107#	RD3015	300	50 $	1 0			3.0	300	125C				15	350	10m	150C	Si△	DO5
108#	OA132	320	50m	1 1	1 5u	280				5 0p	10	250m				175J	Si	A1ce
109	PS632	320 △	200m	1 0	25u	300	50u	300	150A			500m	200m			200	Si	DO14
110	PS633	320 △	200m	1.0	10u	300	25u	300	150A			500m	200m			200	Si	DO14

SYMBOLS AND CODES EXPLAINED IN INTERPRETER

3. DIODES

IN ORDER OF (1) PIV, (2) MIN. FWD. CURRENT, (3) Vf, and (4) TYPE No.

LINE No	4 TYPE No.	1 PIV (V)	MINIMUM FORWARD CURRENT 2 If (A)	3 @Vf (V)	MAXIMUM REVERSE CURRENT at 25°C Ir (A)	at Vr (V)	at SPECIFIED TEST CONDITIONS Ir (A)	at Vr (V)	TEMP. (°C)	CAPACITANCE CAP. (F)	at TEST VOLTS (V)	ABS. MAX. RATINGS AT 25°C DISS. (W)	AV REC FWD. CUR. (A)	SURGE CUR. PEAK 1 Cy (A)	PULSE WIDTH (s)	MAX. TEMP. (°C)	DESCRIPTION MAT.	DWG. No.
1#	109B6	320 #	400m	1 0	1 0u	200						400m	400m			100	Si△	DO7
2	TI59	320 ∅	400m	1 0 △	1 0u	200						400m				100A	Si△	A31f
3	1N4785	320 ∅	7.0	77	150u	10						5 0				85S	Ge	TO3
4	1N354	325	20m	1.0	10u	300	20u	300	125				15m				Si	C12a
5	1N1633	330	1 5m	7 0	27u	182	33 t	182	100J				3 8m	08	1 0	25A	Se∅	M204
6	1N220	330	2 2m	4 0	5 0u	330	100u	330	100A	2.8p	6.0	150m	7 0m			150A	Si*	C1
7	1N1849	330	3.0m	4 0									7 5m			150A	Si	C12a
8	MC487A	330	100m	1 0	10u	300	25u	300	150			250m	150m			175A		A2c
9	MC487B	330	10	1 0	25n	300	10u	300	150			25	.15			175A		A2c
10	MC487	330	100m	1 1	25u	300	50u	300	150			250m	150m			175A		A2c
11#	L1/5H	340	25m	21	7 5u△	220				4 0p	50		25m	1.0m	30	55A	Se	
12#	MQ1/5	340	.25m	21	7 5u△	220				4 0p	50		.25m	1 0m	30	55A	Se	
13#	P1/5H	340	25m	21	7 5u△	20				4 0p	50		.25m	1 0m	30	55A	Se	
14#	Q1/5	340	25m	21	7 5u△	220				4 0p	50		25m	1.0m	30	55A	Se	
15#	T1/5	340	25m	21	7 5u△	220				4 0p	50		.25m	1.0m	30	55A	Se	
16#	L3/5H	340	1 5m	17	24u△	220				12p	50		1 0m	6.0m	30	55A	Se	
17#	MQ3/5	340	1 5m	17	24u△	220				12p	50		1 0m	6 0m	30	55A	Se	
18#	P3/5H	340	1 5m	17	24u△	220				12p	50		1 0m	6 0m	30	55A	Se	
19#	Q3/5	340	1.5m	17	24u△	220				12p	50		1 0m	6 0m	30	55A	Se	
20#	T3/5	340	1 5m	17	24u△	220				12p	50		1 0m	6 0m	30	55A	Se	
21#	L6/5H	340	7 0m	15	120u△	220				100p	50		3.5m	28m	30	55A	Se	
22#	MQ6/5	340	7.0m	15	120u△	220				100p	50		3 5m	28m	30	55A	Se	
23#	P6/5H	340	7 0m	15	120u△	220				100p	50		3.5m	28m	30	55A	Se	
24#	Q6/5	340	7 0m	15	120u△	220				100p	50		3 5m	28m	30	55A	Se	
25#	T6/5	340	7 0m	15	120u△	220				100p	50		3.5m	28m	30	55A	Se	
26#	L8/5H	340	10m	14	300u△	220				200p	50		5 0m	40m	30	55A	Se	
27#	MQ8/5	340	10m	14	300u△	220				200p	50		5 0m	40m	30	55A	Se	
28#	P8/5H	340	10m	14	300u△	220				200p	50		5.0m	40m	30	55A	Se	
29#	Q8/5	340	10m	14	300u△	220				200p	50		5 0m	40m	30	55A	Se	
30#	T8/5	340	10m	14	300u△	220				200p	50		5 0m	40m	30	55A	Se	
31	A45	350	100m	1 0 △			10u	300	75J	4 0p	150		300m	15	10u	125J	Si△	DO14
32#	BAY21	350	100m	1.0	10u	300	25u	300	100J	1 2p	10	400m	200m			150J	Si△	DO7
33#	BAY88	350	100m	1 0	10u	300	20u	300	100	.70p	10	250m	250m	2 0	1 0m	150	Si△	DO7
34	1N3895	350	200m	1 0	50u	350	30u	350	100				400m			150A	Si	A1
35#	BA184	350 ∅	200m	1.2 △	50n	300	10u	300	100	1 5p	0.0	500m	140m	2.0	10u	175A	Si	A1ap
36	A48	350	2 0	1 5 △			200u	300	125J	4 0p	150		300m	15	10u	125J	Si△	DO14
37	MC65	360	400m	1 0	20u	300	15u	300	100				400m					M409a
38	1N83	375	5.0m	1 0	30u	60											Ge	DO7
39#	MD138	375	100m	1 0	500n	300							100m	1 0	1 0	175J	Si*	DO7
40	1N488A	380	100m	1 0	10u	380	25u	380	150			250m	200m	2 0	10m	200A	Si	DO7
41	1N488B	380 $	100m	1 0 △	100n	380	10u	380	150A			250m	200m	2 0	10m	200A	Si	A1cw
42	1N488	380	100m	1 1	25u	380	50u	380	150			250m	100m	1 0	10m	200A	Si	DO7
43	1N221	390	2 0m	4 0	5 0u	390	100u	390	100A	2 6p	6.0	150m	6.0m			150A	Si*	C1
44	PD111	400	5 0m	1 0	1 0u	400						250m	20m			150	Si	A2
45	DR698	400 *	50m	1 0	1 0u	300						150m	100m				Si	DO7
46	DR695	400 *	100m	1 0			50u	300	100			150m	100m				Si	DO7
47	PD910	400	100m	1 0	05u	300	10u	400	25			250m	100m			200S	Si	A188
48#	ZS24	400	100m	1 5	50u	400	5 0u	400	100	2 0p	10	150m	100m	20	10m	150A	Si	C1a
49#	1S134△	400	200m	1 0 △			50u	400	100				200m	1.5	1 0	100A	Si	A1
50#	HS3104	400	200m	1 0	20u	400						200m	165m			200A	Si*	DO7
51	PS636	400 △	200m	1 0	25u	380	50u	380	150A			500m	200m			200	Si	DO14
52	PS637	400 △	200m	1 0	.10u	380	25u	380	150A			500m	200m			200	Si	DO14
53#	ZS94	400	250m	1 1	.25u	400	20u	400	100	12p∅	10	275m	250m	5 0	10m	150A	Si	DO7
54#	ZS124	400	250m	1 1	5 0u	400	50u	400	100	12p∅	10	275m	250m	5.0	10m	100A	Si△	DO7
55	1N3894	400	400m	1 0	20u	400	30u	400	125				400m			150A	Si	A1
56	1N4542	400	400m	1 0	.02u	400	6.0u	400	150				400m			200S	Si	DO14
57	40SG4	400	40	1 0	100n	400	5 0u	400	150	10p∅	1 0	45	.40	3 0	8 0m	175A	Si	A1da
58#	110B6	400 §	400m	1 0	1 0u	300						400m	400m			100	Si△	DO7
59▼	C6397	400	400m	1 0	200n	400	20u	400	100							175A	Si	M371
60▼	C6397A	400	400m	1 0	25n	400	10u	400	100							175A	Si	M371
61	MC040	400	400m	1 0	20u	400	15u	400	150			300m	200m			175A	Si	A2c
62	MC040A	400	40	1 0	25n	400	5.0u	400	150			30	20			175A	Si	A2c
63#	MS36H	400	400m	1 0 △	.20u	400	20u	400	100C	9 0p∅	12	600m	400m	3 0	1.0	150A	Si△	DO7
64	PS5302	400	400m	1 0	02u	400	15u	400	150			600m	400m			200S	Si*	A60p
65	TI60	400 ∅	400m	1 0 △	1 0u	300						400m				100A	Si△	A31f
66#	ZS104	400	400m	1 0	20u	400	15u	400	100	12p∅	10	400m	400m	5 0	10m	175A	Si	DO7
67	1N3728	400	400m	1 2	10u	400	10u	400	150			250m	200m	1 0	1 0	200J	Si	A1bz
68▼#	1B05J40	400	400m	2 0 △	2 0u	400										100A		M534a
69	MC1524	400	500m	1 0	10u	400	10u	400	150			750m	500m			175A	Si	A2d
70#	ZS34A	400	500m	1 1	20u	400	20u	400	100	15p	10	650m	500m			160A	Si△	A44
71#	ZS34B	400	500m	1 1	5 0u	400	50u	400	100	15p	10	650m	500m			160A	Si△	A44
72	HGR40	400	1 0	1 1	10u	400	50u	400	100				1 0m§	30	8.3m	175A	Si	A196a
73▼#	1B08T40	400	2 0	2 5 △	2 0u	400										150A		M631
74	1N5625	400	3 0	950m△			300u	400	175A				3 0 §	125 §		175A	Si	A249
75▼#	1B20K40	400	4 0	2.5 △	5 0u	400										150A		M534b
76▼#	3B30L40	400	6 0	2 5 △	4 0u	400										150A		M633
77▼#	1B40K40	400	10	2 5 △	10u	400										150A		M534b
78▼#	3B60L40	400	12	2 3 △	10u	400										150A		M633
79▼#	1B100M40	400	20	2 5 △	5 0u	400										150A		M632
80#	RD4015	400	50 $	1 0			3 0	400	125C				15	350	10m	150C	Si△	DO5
81#	L1/6H	408	250u	25	7 5u△	264				3.3p	60		250u	1 0m	30	55A	Se	
82#	L3/6H	408	1 5m	21	24u△	264				10p	60		1 0m	6 0m	30	55A	Se	
83#	L6/6H	408	7 0m	18	120u△	264				83p	60		3 5m	28m	30	55A	Se	
84#	L8/6H	408	10m	16	300u△	264				166p	60		5 0m	40m	30	55A	Se	
85	MC488A	410	100m	1 0	10u	380	25u	380	150			250m	150m			175A		A2c
86	MC488B	410	10	1 0	25n	380	10u	380	150			.25	15			175A		A2c
87	MC488	410	100m	1 1	25u	380	50u	380	150			250m	150m			175A		A2c
88#	BA185	450 ∅	200m	1 2 △	50n	350	10u	350	100	1.5p	0 0	500m	140m	2.0	10u	175A	Si	A1ap
89	1N222	470	1 5m	4 0	5 0u	470	100u	470	100A	2 4p	6 0	150m	5.5m			150A	Si*	C1
90	1N1850	470	2.0m	4 0									6.0m			150A	Si	C12a
91	MC66	480	40	1 0	25n	400	15u	400	150				40					M409a
92#	0114	490 *	100m	1 0	10u	400						250m	125m	1 0		150J	Si*	C18f
93	PD112	500	5 0m	1 0	1 0u	500						250m	20m			150	Si	A2
94	PD911	500	100m	1 0	05u	400	10u	500	25			250m	100m			200S	Si	A188
95#	HS3105	500	200m	1 0	20u	500						200m	165m			200A	Si*	DO7
96	MCPD532A	500	200m	1 0	200n	500	10u	500	100			250m				150A	Si	M411
97	MCPD532B	500	200m	1 0	200n	500	10u	500	100			500m				150A	Si	M411a
98	MCPD532C	500	200m	1 0	200n	500	10u	500	100			500m				150A	Si	M277d
99#	BA186	500 ∅	200m	1 2 △	50n	400	10u	400	100	1 5p	0 0	500m	140m	2.0	10u	175A	Si	A1ap
100#	0504	500	250m	1 2	5 0u	500				7 0p	1 0	400m	250m	10	10m	125	Si	A1ce
101	40SG5	500	40	1 0	100n	500	5 0u	500	150	10p∅	1 0	.45	40	3 0	8 0m	175A	Si	A1da
102▼	C6398	500	400m	1.0	200n	500	20u	500	100							175A	Si	M371
103	MC050	500	400m	1 0	20u	500	15u	500	150			300m	200m			175A	Si	A2c
104	MC050A	500	40	1 0	25n	500	5 0u	500	150			30	20			175A	Si	A2c
105#	MS37H	500	400m	1 0 △	20u	500	20u	500	100C	9 0p∅	12	600m	400m	3 0	1 0	150A	Si△	DO7
106	PS5303	500	400m	1 0	02u	500	15u	500	150			600m	400m			200S	Si*	A60p
107	MC1525	500	500m	1 0	10u	500	10u	500	150			750m	500m			175A	Si	A2d
108#	L1/8H	544	250u	33	7 5u△	352				1 3p	80		250u	1 0m	30	55A	Se	
109#	L3/8H	544	1 5m	28	24u△	352				7 5p	80		1 0m	6 0m	30	55A	Se	
110#	L6/8H	544	7 0m	24	120u△	352				62p	80		3 5u	28m	30	55A	Se	

SYMBOLS AND CODES EXPLAINED IN INTERPRETER

3. DIODES

IN ORDER OF (1) PIV, (2) MIN. FWD. CURRENT, (3) Vf, and (4) TYPE No.

LINE No	4 TYPE No	1 PIV (V)	MINIMUM FORWARD CURRENT 2 If (A)	3 @Vf (V)	MAXIMUM REVERSE CURRENT at 25°C Ir (A)	at Vr (V)	at SPECIFIED TEST CONDITIONS Ir (A)	at Vr (V)	TEMP (°C)	CAPACITANCE CAP (F)	at TEST VOLTS (V)	ABS. MAX. RATINGS AT 25°C DISS. (W)	AV REC FWD. CUR. (A)	SURGE CUR. PEAK 1 Cy (A)	PULSE WIDTH (s)	MAX. TEMP. (°C)	DESCRIPTION MAT.	DWG. No.
1#	L8/8H	544	10m	22	300u△	352				125p	80		5 0u	40m	30	55A	Se	
2	PD113	575	5 0m	1 0	1.0u	575						200m	20m			150	Si	A2
3#	BAY89	600	100m	1 0	1 0u	500	30u	500	100	60p	10	250m	250m	2 0	1.0m	150	Si△	DO7
4	PD912	600	100m	1 0	05u	500	10u	600	25			250m	100m			200S	Si	A188
5#	1S136△	600	200m	1 0 △			50u	600	100				200m	1 5	1 0	100A	Si	A1
6#	HS3106	600	200m	1 0	20u	600						200m	165m			200A	Si*	DO7
7	1N4543	600	400m	1 0	02u	600	7 0u	600	150				400m			200S	Si	DO14
8	40SG6	600	40	1 0	100n	600	5 0u	600	150	10p⊘	1 0	45	40	3 0	8 0m	175A	Si	A1da
9▼	C6399	600	400m	1 0	200n	600	20u	600	100							175A	Si	M371
10	MC060	600	400m	1 0	20u	600	25u	600	150			300m	200m			175A	Si	A2c
11	MC060A	600	40	1 0	25n	600	5 0u	600	150			30	.20			175A	Si	A2c
12	MC67	600	40	1 0	200n	500	20u	500	100				40					M409a
13#	MS38H	600	400m	1 0 △	20u	600	25u	600	100C	9 0p⊘	12	600m	400m	3.0	1 0	150A	Si△	DO7
14	PS5304	600	400m	1 0	02u	600	15u	600	150			600m	400m			200S	Si*	A60p
15#	ZS106	600	400m	1 0	20u	600	15u	600	100	12p⊘	10	400m	400m	5.0	10m	175A	Si	DO7
16	MC1526	600	500m	1 0	10u	600	10u	600	150			750m	500m			175A	Si	A2d
17	HGR60	600	1 0	1 1	10u	600	50u	600	100				1 0	30	8 3m	175A	Si	A196a
18▼#	1B08T60	600	2 0	2 5 △	2 0u	600										150A		M631
19	1N5626	600	3 0	950m△			200u	600	175A				3 0 §	125 §		175A	Si	A249
20▼#	1B20K60	600	4 0	2 5 △	5 0u	600										150A		M534b
21▼#	3B30L60	600	6 0	2 5 △	4 0u	600										150A		M633
22▼#	1B40K60	600	10	2.5 △	10u	600										150A		M534b
23▼#	3B60L60	600	12	2 3 △	10u	600										150A		M633
24▼#	1B100M60	600	20	2 5 △	5 0u	600										150A		M632
25	PD114	650	5 0m	1 0	1 0u	650						250m	20m			150	Si	A2
26#	L1/10H	680	25m	42	7 5u△	440				2 0p	100		.25m	1 0m	30	55A	Se	
27#	L3/10H	680	1 5m	35	24u△	440				6 0p	100		1 0m	6 0m	30	55A	Se	
28#	L6/10H	680	7 0m	31	120u△	440				50p	100		3.5m	28m	30	55A	Se	
29#	L8/10H	680	10m	28	300u△	440				100p	100		5 0m	40m	30	55A	Se	
30	PD913	700	100m	1 0	05u	600	10u	700	25			250m	100m			200S	Si	A188
31	40SG7	700	40	1 0	100n	700	5 0u	700	150	10p⊘	1 0	45	.40	3 0	8 0m	175A	Si	A1da
32	MC070	700	400m	1 0	20u	700	25u	700	150			300m	200m			175A	Si	A2c
33	MC070A	700	40	1 0	25n	700	5.0u	700	150			30	.20			175A	Si	A2c
34	MC1527	700	400m	1 0	20u	700	15u	700	150			750m	450m			175A	Si	A2d
35	MC68	720	400m	1 0	05u	600	250u	600	150				400m					M409a
36	PD115	750	5 0m	1 0	1 0u	750						250m	20m			150	Si	A2
37	PD914	800	100m	1 0	05u	700	10u	800	25			250m	100m			200S	Si	A188
38#	1S138△	800	200m	1 0 △			50u	800	100				200m	1 5	1.0	100A	Si	A1
39#	HS3108	800	200m	1 0	20u	800						200m	165m			200A	Si*	DO7
40	MC080	800	200m	1 0	30u	800	30u	800	150			300m	200m			175A	Si	A2c
41	MC080A	800	200m	1 0	05u	800	10u	800	150			300m	200m			175A	Si	A2c
42#	0507	800	250m	1 2	5 0u	800				4 0p	1 0	400m	250m	10	10m	125	Si	A1ce
43	1N4544	800	400m	1 0	02u	800	8 0u	800	150				400m			200S	Si	DO14
44	40SG8	800	40	1 0	100n	800	5 0u	800	150	10p⊘	1.0	45	40	3.0	8.0m	175A	Si	A1da
45	MC1528	800	400m	1 0	20u	800	15u	800	150			750m	450m			175A	Si	A2d
46#	ZS108	800	400m	1 0	20u	800	15u	800	100	12p⊘	10	400m	400m	5 0	10m	175A	Si	DO7
47#	TF157	800	600m	1 0 △	5 0u	800						600m	600m	3 0	1.0	150A	Si	DO7
48▼#	1B08T80	800	2 0	2 5 △	2 0u	800										150A		M631
49	1N5627	800	3 0	950m△			200u	800	175A				3 0 §	125 §		175A	Si	A249
50▼#	1B20K80	800	4 0	2 5 △	5 0u	800										150A		M534b
51▼#	3B30L80	800	6 0	2 5 △	4 0u	800										150A		M633
52▼#	1B40K80	800	10	2 5 △	10u	800										150A		M534b
53▼#	3B60L80	800	12	2 3 △	10u	800										150A		M633
54▼#	1B100M80	800	20	2 5 △	5 0u	800										150A		M632
55	PD915	900	100m	1 0	05u	800	10u	900	25			250m	100m			200S	Si	A188
56	MC1529	900	400m	1 0	20u	900	15u	900	150			750m	400m			175A	Si	A2d
57#	TF156	900	500m	1 1 △	1 0u	900				6 0p⊘	12	600m	400m	3 0	1 0	150A	Si	DO7
58#	L1/15H	1 0k	250u	63	7.5u△	660				1 3p	150		250u	1 0m	30	55A	Se	
59#	L3/15H	1 0k	1 5m	52	24u△	660				4 0p	150		1 0m	6 0m	30	55A	Se	
60#	L6/15H	1 0k	7 0m	46	120u△	660				33p	150		3 5m	28m	30	55A	Se	
61▼	DD10	1 0k	10m	6 0 △	10n	1 0k	5 0u	1 0k	100	1.0p⊘	0 0	100m	20m	500m	8.3m	150S	Si	A109b
62▼	DD10A	1 0k	10m	6.0 △	2 0n	1 0k	1 0u	1.0k	100	1 0p⊘	0.0	100m	20m	500m	8 3m	150S	Si	A109b
63▼	ND10	1 0k	10m	6.0 △	10n	1 0k	5 0u	1 0k	100	1 0p⊘	0 0	100m	20m	500m	8.3m	150S	Si	A83cd
64▼	ND10A	1 0k	10m	6 0 △	2.0n	1 0k	1 0u	1 0k	100	1 0p⊘	0.0	100m	20m	500m	8 3m	150S	Si	A83cd
65▼	SN10	1 0k	10m	6 0	20n	1 0k	10u	1 0k	100	1.0p	0 0		10m	500m	8 3m	150S	Si	A109
66#	L8/15H	1.0k	10m	42	300u△	660				66p	150		5.0m	40m	30	55A	Se	
67▼	TN10	1 0k	15m	3 0	20n	1 0k	10u	1 0k	100	2.0p	0.0		15m	500m	8 3m	150S	Si	A109b
68▼	3DD10	1 0k	30m	3 0 △	70n	1 0k	2 0u	1 0k	100	2 0p⊘	0 0	100m	30m	500m	8.3m	150S	Si	A109d
69	PD116	1 0k	50m	1 0	50n	900	10u	1.0k	25			.25	10			200S	Si	A188
70#	BAY23	1 0k	80m	3 0	1 0u	1 0k						30	60m			150J	Si△	A1ne⊘
71#	BAY90	1 0k	10	1 0	1 0u	800	50u	800	100	60p	10	25	25	2 0	1 0m	150	Si△	DO7
72	PD916	1 0k	10	1 0	50n	900	10u	1.0k	25			25	10			200S	Si	A188
73#	HS3110	1 0k	20	1 0	200n	1 0k						20	165m			200A	Si*	DO7
74	MC100⊘	1 0k	20	1 0	500n	1 0k	50u	1 0k	150			30	.20			175A	Si	A2c
75	MC100A⊘	1 0k	20	1 0	50n		10u	1.0k	150			30	.20			175A	Si	A2c
76	1N3643	1 0k	25	5 0 △	5 0u							1 0		14		200S	Si	A83a
77	1N4545	1 0k	40	1 0	20n		9 0u	1 0k	150				40			200S	Si	DO14
78	1N3929	1 0k	1 0	2 0 △	10u							2 0				175S	Si	DO13
79▼#	3B30L100	1 0k	6 0	2 5 △	4 0u	1 0k										150A		M633
80	MC110⊘	1 1k	20	1 0	200n	1 1k						30	20			175A	Si	A2t
81	MC110A⊘	1 1k	20	1 0	25n	1.1k						30	.20			175A	Si	A2t
82	MC110AS	1 1k	20	1 0	25n	1.1k						.30	20			175A	Si	A1cy
83	MC110S	1 1k	.20	1 0	200n	1.1k						30	20			175A	Si	A1cy
84▼	TN12	1 2k	15m	3 0	20n	1 2k	10u	1 2k	100	2 0p	0 0		15m	500m	8 3m	150S	Si	A109b
85	PD117	1 2k	50m	1 0	50n	1.1k	10u	1 2k	25			.25	10			200S	Si	A188
86	PD917	1 2k	10	1 0	50n	1 1k	10u	1 2k	25			25	.10			200S	Si	A188
87	MC120	1 2k	20	1 0	200n	1.2k						.30	20			175A	Si	A2t
88	MC120A	1 2k	20	1 0	25n	1 2k						.30	.20			175A	Si	A2t
89	MC120AS	1 2k	20	1 0	25n	1 2k						30	.20			175A	Si	A1cy
90	MC120S	1 2k	20	1 0	200n	1.2k						30	20			175A	Si	A1cy
91#	L1/20H	1 3k	250u	84	7 5u△	880				1 0p	200		250u	1 0m	30	55A	Se	
92#	L3/20H	1 3k	1 5m	70	24u△	880				3 0p	200		1 0m	6 0m	30	55A	Se	
93#	L6/20H	1 3k	7 0m	62	120u△	880				25p	200		3 5m	28m	30	55A	Se	
94#	L8/20H	1 3k	10m	56	300 △	880				50p	200		5 0m	40m	30	55A	Se	
95	PD118	1 3k	50m	1 0	50n	1 2k	10u	1 3k	25			25	10			200S	Si	A188
96	MC130	1 3k	10	1 0	300n	1 3k						30	10			175A	Si	A2t
97	MC130A	1 3k	10	1 0	25n	1 3k						30	10			175A	Si	A2t
98	MC130AS	1 3k	10	1 0	25n	1 3k						.30	10			175A	Si	A1cy
99	MC130S	1 3k	10	1 0	300n	1 3k						30	10			175A	Si	A1cy
100	PD918	1 3k	10	1 0	50n	1 2k	10u	1 3k	25			25	10			200S	Si	A188
101	MC140	1 4k	10	1 0	300n	1.4k						.30	10			175A	Si	A2t
102	MC140A	1 4k	10	1 0	25n	1.4k						30	10			175A	Si	A2t
103	MC140AS	1 4k	10	1 0	25n	1 4k						30	10			175A	Si	A1cy
104	MC140S	1 4k	10	1 0	300n	1.4k						30	10			175A	Si	A1cy
105▼	TN15	1 5k	15m	3 0	20n	1 5k	10u	1 5k	100	2 0p	0 0		15m	500m	8 3m	150S	Si	A109b
106▼	3DD15	1 5k	30m	3 0 △	70n	1 5k	2 0u	1 5k	100	2 0p⊘	0 0	100m	30m	500m	8 3m	150S	Si	A109d
107	PD119	1 5k	50m	1 0	50n	1 4k	10u	1 5k	25			25	10			200S	Si	A188
108#	BAY24	1 5k	80m	3 0	1 0u	1.5k						30	60m			150J	Si△	A1ne
109	MC150	1 5k	10	1 0	500n	1.5k						30	10			175A	Si	A2t
110	MC150A	1 5k	10	1 0	25n	1 5k						30	10			175A	Si	A2t

SYMBOLS AND CODES EXPLAINED IN INTERPRETER

3. DIODES

IN ORDER OF (1) PIV, (2) MIN. FWD. CURRENT, (3) Vf, and (4) TYPE No.

LINE No	4 TYPE No.	1 PIV (V)	MINIMUM FORWARD CURRENT 2 If (A)	3 @Vf (V)	MAXIMUM REVERSE CURRENT at 25°C Ir (A)	at Vr (V)	at SPECIFIED TEST CONDITIONS Ir (A)	at Vr (V)	TEMP. (°C)	CAPACITANCE CAP. (F)	at TEST VOLTS (V)	ABS. MAX. RATINGS AT 25°C DISS. (W)	AV REC FWD. CUR. (A)	SURGE CUR. PEAK 1 Cy (A)	PULSE WIDTH (s)	MAX. TEMP (°C)	DESCRIPTION MAT.	DWG. No.
1	MC150AS	1 5k	.10	1 0	25n	1 5k						30	10			175A	Si	A1cy
2	MC150S	1 5k	10	1 0	500n	1 5k						30	10			175A	Si	A1cy
3	PD919	1 5k	10	1 0	50n	1.4k	10u	1.5k	25			25	10			200S	Si	A188
4	1N3644	1 5k	25	5 0 △	5 0u	1 5k						1 0k		14		200S	Si	A83a
5	HV15	1 5k	500m	2 0 △	1 0u	1 5k							500m	40	8 3m	100A	Si*△	A1bc
6	HVC15	1.5k	1 0	2 0 △	1 0u	1 5k							1 0	80	8.3m	100A	Si*△	A1ey
7	1N4865	1 5k	1 2	2 4			60	1 5k	125				1.2k	150		125A	Si	M326
8#	P1506	1 5k	20 $	1 1			3 0	1 5k	125C				6 0	5 0k	10m	150C	Si△	S95a
9#	NT161	1 6k	500	1 3 △	100n	100	10m	1 6k	125C	4 0p⊘	1 0	250m	160	3.8	10m	150C	Si△	DO7
10#	NT251	1.6k	1 0k$	1 3			10m	1.6k	125C				250	5 0k	10m	150C	Si△	
11▼#	BY184	1 8k	100m	5 0 △			10u	1.5k	75J				2 0m	1 0	10m	75J	Si	A171h
12#	NT162	1 8k	500	1 3 △	100n	100	10m	1 8k	125C	4.0p⊘	1.0	250m	160	3 8	10m	150C	Si△	DO7
13#	NT252	1 8k	1 0k$	1 3			10m	1 8k	125C				250	5 0k	10m	150C	Si△	
14▼	DD20	2 0k	10m	6 0 △	10n	2 0k	5.0u	2 0k	100	1 0p⊘	0 0	100m	20m	500m	8.3m	150S	Si	A109b
15▼	DD20A	2.0k	10m	6.0 △	2 0n	2 0k	1.0u	2 0k	100	1 0p⊘	0 0	100m	20m	500m	8 3m	150S	Si	A109b
16▼	ND20	2 0k	10m	6 0 △	10n	2 0k	5 0u	2 0k	100	1.0p⊘	0 0	100m	20m	500m	8 3m	150S	Si	A83cd
17▼	ND20A	2.0k	10m	6 0 △	2 0n	2 0k	1 0u	2 0k	100	1 0p⊘	0 0	100m	20m	500m	8 3m	150S	Si	A83cd
18▼	SN20	2 0k	10m	6 0	20n	2 0k	10u	2 0k	100	1 0p	0 0		10m	500m	8 3m	150S	Si	A109
19▼	3DD20	2 0k	30m	3 0 △	10n	2 0k	2 0u	2 0k	100	2.0p⊘	0 0	100m	30m	500m	8 3m	150S	Si	A109d
20#	BAY25	2 0k	80m	3 0	1 0u	2 0k						30	60m			150J	Si△	A1ne∅
21#	BAY91	2 0k	.10	1 0	3 0u	1 5k	100u	1.5k	100	60p	10	25	25	2 0	1 0m	150	Si△	DO7
22	HV21	2 0k	250m	4 0 △	1.0u	2 0k							250m	20	8 3m	100A	Si*△	A1bc
23	1N3645	2 0k	.25	5 0 △	5 0u	2 0k						1 0		14		200S	Si	A83a
24	HV20	2 0k	500m	2 0 △	1 0u	2 0k							500m	40	8 3m	100A	Si*△	A1bc
25	1N3931	2 0k	1 0	2 0 △	10u	2 0k						2 0				175S	Si	DO13
26	HVC20	2 0k	1 0	2 0 △	1 0u	2 0k							1 0	80	8 3m	100A	Si*△	A1ey
27#	NT163	2.0k	500	1 3 △	100n	100	10m	2 0k	125C	4.0p⊘	1 0	250m	160	3 8	10m	150C	Si△	DO7
28#	NT253	2 0k	1 0k$	1 3			10m	2 0k	125C				250	5 0k	10m	150C	Si△	
29#	NT164	2 2k	500	1 3 △	100n	100	10m	2.2k	125C	4 0p⊘	1 0	250m	160	3 8	10m	150C	Si△	DO7
30#	NT254	2.2k	1 0k$	1 3			10m	2.2k	125C				250	5 0k	10m	150C	Si△	
31	1N5482	2 4k*	1.0	4 8 △			350u	2 0k	150A				1.0 §	80		150A	Si	A1hy
32#	NT165	2 4k	500	1 3 △	100n	100	10m	2 4k	125C	4 0p⊘	1 0	250m	160	3 8	10m	150C	Si△	DO7
33#	NT255	2 4k	1 0k$	1 3			10m	2.4k	125C				250	5 0k	10m	150C	Si△	
34▼	3DD25	2 5k	30m	3.0 △	10n	2 5k	2.0u	2 5k	100	2 0p⊘	0 0	100m	30m	500m	8 3m	150S	Si	A109d
35	1N3646	2 5k	25	5 0 △	5 0u	2 5k						1 0		14		200S	Si	A83a
36	HVC25	2 5k	1 0	2 0 △	1 0u	2 5k							1 0	80	8 3m	100A	Si*△	A1ey
37	1N4866	2 5k	1.2	3 6			600u	2 5k	125				1 2k	15		125A	Si	M326a
38▼	DD30	3 0k	10m	6 0 △	10n	3 0k	5 0u	3 0k	100	1.0p⊘	0 0	100m	20m	500m	8.3m	150S	Si	A109b
39▼	DD30A	3 0k	10m	6 0 △	2 0n	3 0k	1 0u	3.0k	100	1 0p⊘	0.0	100m	20m	500m	8.3m	150S	Si	A109b
40▼	ND30	3 0k	10m	6 0 △	10n	3 0k	5 0u	3 0k	100	1 0p⊘	0.0	100m	20m	500m	8.3m	150S	Si	A83cd
41▼	ND30A	3.0k	10m	6 0 △	2 0n	3 0k	1 0u	3 0k	100	1 0p⊘	0.0	100m	20m	500m	8 3m	150S	Si	A83cd
42▼	SN30	3 0k	10m	6 0	20n	3.0k	10u	3 0k	100	1.0p	0 0		10m	500m	8.3m	150S	Si	A109
43▼	3DD30	3 0k	30m	3 0 △	10n	3 0k	2.0u	3 0k	100	2 0p⊘	0 0	100m	30m	500m	8 3m	150S	Si	A109d
44#	BAY26	3 0k	80m	3 0	3 0u	3 0k						30	60m			150J	Si△	A1ne∅
45	HV30	3 0k	250m	4 0 △	1 0u	3 0k							250m	20	8 3m	100A	Si*△	A1bc
46	1N3647	3 0k	25	5 0 △	5 0u	3 0k						1 0		14		200S	Si	A83a
47	HVC30	3.0k	1.0	4 0 △	1 0u	3 0k							500m	80	8 3m	100A	Si*△	A1ey
48	1N4867	3 0k	1 2	4 8			600u	3.0k	125				1 2k	150		125A	Si	M326b
49	1N5483	3 6k*	1 0	7 2 △			350u	3 0k	150A				1.0 §	80		150A	Si	A1ms
50▼	DD40	4 0k	10m	6 0 △	10n	4 0k	5 0u	4.0k	100	1 0p⊘	0.0	100m	20m	500m	8 3m	150S	Si	A109b
51▼	DD40A	4 0k	10m	6 0 △	2.0n	4 0k	1 0u	4 0k	100	1 0p⊘	0 0	100m	20m	500m	8 3m	150S	Si	A109b
52▼	ND40	4 0k	10m	6 0 △	10n	4 0k	5 0u	4 0k	100	1 0p⊘	0 0	100m	20m	500m	8 3m	150S	Si	A83cd
53▼	ND40A	4 0k	10m	6 0 △	2 0n	4 0k	1.0u	4.0k	100	1 0p⊘	0 0	100m	20m	500m	8 3m	150S	Si	A83cd
54▼	SN40	4 0k	10m	6 0	20n	4 0k	10u	4 0k	100	1.0p	0.0		10m	500m	8 3m	150S	Si	A109
55	HV40	4 0k	250m	4 0 △	1 0u	4 0k							250m	20	8 3m	100A	Si*△	A1bc
56	1N3992	4 0k	25	5 0 △	5 0u	4 0k						1 0				200S	Si	A83a
57	HVC40	4 0k	1 0	4 0 △	1.0u	4 0k							500m	80	8.3m	100A	Si*△	A1ey
58	1N5484	4 8k*	1 0	8 4 △			350u	4.0k	150A				1 0 §	80		150A	Si	A1ms
59	HV50	5.0k	250m	6 0 △	1 0u	5.0k							250m	20	8 3m	100A	Si*△	A1bc
60	1N4868	5 0k	1 2	8 4			600u	5.0k	125				1 2k	150		125A	Si	M326b
61	HV60	6 0k	250m	6 0 △	1 0u	6 0k							250m	20	8 3m	100A	Si*△	A1bc
62	1N5477	6 0k*	600m	10 △			350u	5 0k	150A				600m§	80		150A	Si	M101a
63	1N5485	6 0k*	1.0	10 △			350u	5.0k	150A				1 0 §	80		150A	Si	A1nu
64	1N5478	7 2k*	600m	12 △			350u	6.0k	150A				600m§	80		150A	Si	M101a
65	1N4869	7 5k	1 2	12			600u	7 5k	125				1 2k	150		125A	Si	M326c
66	1N5479	8 4k*	600m	14 △			350u	7.0k	150A				600m§	80		150A	Si	M101a
67	1N5480	9 6k*	600m	16 △			350u	8 0k	150A				600m§	80		150A	Si	M101a
68#	ME100D	10k	650m	10 △	10u	10k							200m	2 5	10m			A1a
69	1N4870	10k	1 2	16			600u	10k	125				1 2k	150		125A	Si	M326d
70	1N5481	12k*	600m	21 △			350u	10k	150A				600m§	80		150A	Si	M101a
71	1N4871	12k	1.2	18			600u	12k	125				1 2k	150		125A	Si	M326d
72	1N4872	15k	1 2	23			600u	15k	125				1.2k	150		125A	Si	M326e
73	1N4873	20k	1.2	30			600u	20k	125				1 2k	150		125A	Si	M326f
74	1N4874	25k	1 2	38			600u	25k	125				1 2k	150		125A	Si	M326g
75	1N4875	30k	1 2	46			600u	30k	125				1 2k	150		125A	Si	M326h
76	1N4876	40k	1 2	60			600u	40k	125				1 2k	150		125A	Si	M326j
77	1N4877	50k	1 2	76			600u	50k	125				1 2k	150		125A	Si	M326k
78	1N4887	75k	1.2	115			600u	75k	125				1 2k	150		125A	Si	M326l

SYMBOLS AND CODES EXPLAINED IN INTERPRETER

4. SWITCHING DIODES

IN ORDER OF (1) PIV, (2) RECOVERY TIME, and (3) TYPE No.

LINE No	3 TYPE No.	1 PIV (V)	RECOVERY TIME 2 Trr (s)	TEST CONDITIONS If (A)	Vr (V)	Zr (Ω)	Ir (A)	RL (Ω)	CKT	STORE TIME (s)	MIN. FORWARD CURRENT at 25°C IF (A)	at Vf (V)	MAX. REVERSE CURRENT Ir @25°C & Vr (A)	Ir at T & Vr (A)	TEMP T (°C)	TEST VOLT Vr (V)	CAP. at ZERO VOLTS (F)	ABSOLUTE MAX RATING AVG. FWD I (A)	MAX. TEMP (°C)	DESCRIPTION MAT.	DWG. No.
1	1N4888		.50n*	20m							20m	1 0	05u			5.0			200S	Si	DO7
2	ID1-050	1 0	10n	10m	6 0	3 0K		120			10m	.55	100u			1 0			75A	Ge*	DO7
3	ID1-050A	1 0	10n	10m	6 0	3 0K		120			10m	.50	100u			1 0			75A	Ge*	DO7
4	ID1-050B	1 0	10n	10m	6 0	3 0K		120			20m	.50	100u			1 0			75A	Ge*	DO7
5	ID1-050C	1 0	10n	10m	6 0	3 0K		120			30m	50	100u			1.0			75A	Ge*	DO7
6	ID1-050D	1.0	10n	10m	6.0	3 0K		120			5.0m	.35	100u			1.0			75A	Ge*	DO7
7	ID1-050E	1.0	10n	10m	6 0	3 0K		120			5.0m	60	100u			1 0			75A	Ge*	DO7
8	ID1-050T	1.0	10n	10m	6.0	3 0K		120			200m	1 0	100u			1 0			75A	Ge*	DO7
9	Q1-100	1 0	1.0n	10m			1 0m				100m	1.0							75A		DO7
10	Q1-100A	1 0	1.0n	10m			1 0m				10m	50							75A		DO7
11	Q1-100B	1.0	1 0n	10m			1.0m				20m	.50							75A		DO7
12	Q1-100C	1.0	1 0n	10m			1 0m				30m	.50							75A		DO7
13	Q1-100D	1.0	1 0n	10m			1 0m				5 0m	.35							75A		DO7
14	Q1-100E	1 0	1 0n	10m			1 0m				5 0m	60							75A		DO7
15	Q1-100T	1 0	1 0n	10m			1 0m				200m	1.0							75A		DO7
16	Q1-200	1 0	1.0n	10m			1 0m				10m	1 0							75A		DO7
17	Q1-200A	1 0	1.0n	10m			1 0m				20m	1.0							75A		DO7
18	Q1-200B	1 0	1.0n	10m			1 0m				30m	1 0							75A		DO7
19	HT1-050	2 0	100pØ	10m	6 0	3.0k		120			10m	45 Ø		100u	125	1 0				SG	A1by
20	HT1-050A	2.0	100pΔ	10m	6 0	3 0k		120			10m	.40 Ø		100u	125	1.0				SG	A1by
21	HT1-050B	2 0	100pΔ	10m	6.0	3 0k		120			20m	.40 Ø		100u	125	1.0				SG	A1by
22	HT1-050C	2.0	100pΔ	10m	6.0	3 0k		120			30m	.45 Ø		100u	125	1.0				SG	A1by
23	HT1-050T	2.0	100pΔ	10m	6.0	3 0k		120			250m	1.0 Ø		100u	125	1 0				SG	A1by
24	ID2-050	2 0	.10n	10m	6.0	3.0K		120			10m	55	100u			2 0			75A	Ge*	DO7
25	ID2-050A	2 0	10n	10m	6 0	3.0K		120			10m	.50	100u			2 0			75A	Ge*	DO7
26	ID2-050B	2 0	10n	10m	6.0	3 0K		120			20m	.50	100u			2.0			75A	Ge*	DO7
27	ID2-050C	2.0	.10n	10m	6 0	3.0K		120			30m	.50	100u			2.0			75A	Ge*	DO7
28	ID2-050D	2.0	10n	10m	6.0	3 0K		120			5 0m	.35	100u			2.0			75A	Ge*	DO7
29	ID2-050E	2 0	10n	10m	6.0	3 0K		120			5.0m	.60	100u			2.0			75A	Ge*	DO7
30	ID2-050T	2 0	10n	10m	6.0	3 0K		120			200m	1 0	100u			2.0			75A	Ge*	DO7
31	Q2-100	2 0	1 0n	10m			1 0m				100m	1.0							75A		DO7
32	Q2-100A	2 0	1 0n	10m			1 0m				10m	.50							75A		DO7
33	Q2-100B	2.0	1 0n	10m			1.0m				20m	.50							75A		DO7
34	Q2-100C	2.0	1 0n	10m			1.0m				30m	.50							75A		DO7
35	Q2-100D	2.0	1 0n	10m			1.0m				5.0m	.35							75A		DO7
36	Q2-100E	2.0	1.0n	10m			1 0m				5 0m	.60							75A		DO7
37	Q2-100T	2 0	1 0n	10m			1 0m				200m	1 0							75A		DO7
38	Q2-200	2 0	1 0n	10m			1 0m				10m	1 0							75A		DO7
39	Q2-200A	2 0	1 0n	10m			1 0m				20m	1 0							75A		DO7
40	Q2-200B	2.0	1.0n	10m			1 0m				30m	1 0							75A		DO7
41	ID3-050	3 0	10n	10m	6.0	3.0K		120			10m	.55	100u			3.0			75A	Ge*	DO7
42	ID3-050A	3 0	10n	10m	6.0	3 0K		120			10m	.50	100u			3.0			75A	Ge*	DO7
43	ID3-050B	3 0	10n	10m	6 0	3 0K		120			20m	.50	100u			3.0			75A	Ge*	DO7
44	ID3-050C	3.0	10n	10m	6 0	3 0K		120			30m	.50	100u			3.0			75A	Ge*	DO7
45	ID3-050D	3 0	10n	10m	6.0	3 0K		120			5.0m	.35	100u			3.0			75A	Ge*	DO7
46	ID3-050E	3 0	.10n	10m	6.0	3 0K		120			5.0m	.60	100u			3.0			75A	Ge*	DO7
47	ID3-050T	3 0	.10n	10m	6.0	3 0K		120			200m	1 0	100u			3.0			75A	Ge*	DO7
48	HT2-050	3 0	200pΔ	10m	6 0	3 0k		120			10m	.45 Ø		100u	125	2.0				SG	A1by
49	HT2-050A	3.0	200pΔ	10m	6 0	3 0k		120			10m	.40 Ø		100u	125	2 0				SG	A1by
50	HT2-050B	3 0	200pΔ	10m	6.0	3 0k		120			20m	40 Ø		100u	125	2.0				SG	A1by
51	HT2-050C	3 0	200pΔ	10m	6.0	3 0k		120			30m	45 Ø		100u	125	2.0				SG	A1by
52	HT2-050T	3 0	200pΔ	10m	6 0	3 0k		120			250m	1.0 Ø		100u	125	2 0				SG	A1by
53	MA41516	3 0	.50nØ	10m	3 0						20m	1 0 Δ	500u			3 0	40pØ			Si	A1ad
54	Q3-200	3 0	1 0n	10m			1 0m				100m	1.0							75A		DO7
55	Q3-200A	3 0	1.0n	10m			1 0m				10m	50							75A		DO7
56	Q3-200B	3.0	1.0n	10m			1 0m				20m	50							75A		DO7
57	Q3-200C	3.0	1.0n	10m			1 0m				30m	50							75A		DO7
58	Q3-200D	3 0	1 0n	10m			1 0m				5.0m	35							75A		DO7
59	Q3-200E	3 0	1 0n	10m			1.0m				5.0m	.60							75A		DO7
60	Q3-200T	3.0	1.0n	10m			1.0m				200m	1.0							75A		DO7
61	Q3-300	3 0	1 0n	10m			1.0m				10m	1.0							75A		DO7
62	Q3-300A	3.0	1.0n	10m			1 0m				20m	1.0							75A		DO7
63	Q3-300B	3.0	1 0n	10m			1 0m				30m	1 0							75A		DO7
64	Q3-90T	4.0	10n	10m	6 0	3 0K		120			200m	1 0	100u			3 0			75A	GeØ	DO7
65	Q3-100T	4 0	10n	10m	6 0	3 0K		120			200m	1.0	100u			3.0			75A	GeØ	DO7
66	HT3-050	4.0	200pΔ	10m	6.0	3 0k		120			10m	.45 Ø		100u	125	3 0				SG	A1by
67	HT3-050A	4 0	200pΔ	10m	6.0	3 0k		120			10m	.40 Ø		100u	125	3.0				SG	A1by
68	HT3-050B	4 0	200pØ	10m	6.0	3 0k		120			20m	.40 Ø		100u	125	3.0				SG	A1by
69	HT3-050C	4.0	200pΔ	10m	6 0	3.0k		120			30m	45 Ø		100u	125	3.0				SG	A1by
70	HT3-050T	4.0	200pΔ	10m	6.0	3.0k		120			250m	1.0 Ø		100u	125	3 0				SG	A1by
71	MA4121	4.0	50nØ	10m	4 0	8 0K					30m	1.0	200u			4.0	.50pØ		150A	SiØ	DO7
72	D4121	4 0 $	800pØ	40m			200u	120			40m	1.5 Δ	200u			4 0	400f*	40m	150A	Si	A1cy
73	Q4-100	4 0	1 0n	1.6m	3.0						250m	1.0	100u			4.0			75A	GeØ	DO7
74	Q3-500	4.0	2.0n	10m	6 0	3 0K		120			100m	1.0	100u			3 0			75A	GeØ	DO7
75	Q4-500	4 0	8 0n	1 6m	3 0						250m	1.0	100u			4.0			75A	GeØ	DO7
76	ID5-050	5.0	20n	10m	6.0	3 0K		120			10m	55	100u			5 0			75A	Ge*	DO7
77	ID5-050A	5 0	20n	10m	6 0	3.0K		120			10m	.50	100u			5 0			75A	Ge*	DO7
78	ID5-050B	5 0	.20n	10m	6.0	3 0K		120			20m	.50	100u			5.0			75A	Ge*	DO7
79	ID5-050C	5 0	.20n	10m	6 0	3 0K		120			30m	.52	100u			5 0			75A	Ge*	DO7
80	ID5-050D	5.0	20n	10m	6.0	3 0K		120			5 0m	40	100u			5.0			75A	Ge*	DO7
81	ID5-050E	5 0	20n	10m	6.0	3.0K		120			5 0m	.60	100u			5 0			75A	Ge*	DO7
82	ID5-050T	5 0	20n	10m	6.0	3 0K		120			200m	1 0	100u			5.0			75A	Ge*	DO7
83	HT4-050	5 0	500pΔ	10m	6 0	3 0k		120			10m	45 Ø		100u	125	4.0				SG	A1by
84	HT4-050A	5 0	500pΔ	10m	6 0	3 0k		120			10m	45 Ø		100u	125	4 0				SG	A1by
85	HT4-050B	5 0	500pΔ	10m	6.0	3 0k		120			20m	40 Ø		100u	125	4 0				SG	A1by
86	HT4-050C	5 0	500pΔ	10m	6.0	3 0k		120			30m	45 Ø		100u	125	4 0				SG	A1by
87	HT4-050T	5 0	500pΔ	10m	6.0	3 0k		120			250m	1 0 Ø		100u	125	4.0				SG	A1by
88	Q5-100	5.0	.50n	10m	6 0	3 0K		120			10m	55	100u			5 0			75A	Ge*	DO7
89	Q5-100A	5 0	50n	10m	6 0	3 0K		120			10m	50	100u			5.0			75A	Ge*	DO7
90	Q5-100B	5 0	50n	10m	6 0	3.0K		120			20m	.50	100u			5 0			75A	Ge*	DO7
91	Q5-100C	5 0	.50n	10m	6.0	3 0K		120			30m	52	100u			5 0			75A	Ge*	DO7
92	Q5-100D	5 0	50n	10m	6 0	3 0K		120			5 0m	.40	100u			5 0			75A	Ge*	DO7
93	Q5-100E	5 0	50n	10m	6 0	3 0K		120			5 0m	60	100u			5 0			75A	Ge*	DO7
94	Q5-100T	5 0	50n	10m	6 0	3 0K		120			200m	1 0	100u			5 0			75A	Ge*	DO7
95	Q5-250	5 0	1 0n	1 6m	3 0						200m	1.0	100u			5 0			75A	GeØ	DO7
96	Q5-200	5.0	2 0n	10m			1 0m				100m	1.0							75A		DO7
97	Q5-200A	5.0	2 0n	10m			1 0m				10m	.50							75A		DO7
98	Q5-200B	5 0	2 0n	10m			1 0m				20m	50							75A		DO7
99	Q5-200C	5.0	2.0n	10m			1 0m				30m	.52							75A		DO7
100	Q5-200D	5 0	2 0n	10m			1 0m				5.0m	40							75A		DO7
101	Q5-200E	5 0	2 0n	10m			1 0m				5.0m	60							75A		DO7
102	Q5-200T	5 0	2 0n	10m			1.0m				200m	1.0							75A		DO7
103	Q5-300	5 0	2.0n	10m			1 0m				10m	1.0							75A		DO7
104	Q5-300A	5 0	2 0n	10m			1 0m				20m	1 0							75A		DO7
105	Q5-300B	5 0	2.0n	10m			1.0m				30m	1 0							75A		DO7
106	1N5390	5 0 Ø	3 0n#	10m							10m	.55 Δ	05u			1 0	1.0p		125A	%♦	DO7
107	ID6-050	6 0	30n	10m	6.0	3 0K		120			100m	1 0	100u			6 0			75A	Ge*	DO7
108	ID6-050A	6 0	30n	10m	6 0	3.0K		120			10m	.50	100u			6 0			75A	Ge*	DO7
109	ID6-050B	6 0	30n	10m	6.0	3 0K		120			20m	50	100u			6 0			75A	Ge*	DO7
110	ID6-050C	6 0	30n	10m	6 0	3 0K		120			30m	52	100u			6 0			75A	Ge*	DO7

SYMBOLS AND CODES EXPLAINED IN INTERPRETER

4. SWITCHING DIODES

IN ORDER OF (1) PIV, (2) RECOVERY TIME, and (3) TYPE No.

LINE No	3 TYPE No.	1 PIV (V)	2 RECOVERY TIME Trr (s)	TEST CONDITIONS If (A)	Vr (V)	Zr (Ω)	Ir (A)	RL (Ω)	CKT	STORE TIME (s)	MIN. FORWARD CURRENT at 25°C IF (A)	at Vf (V)	MAX. REVERSE CURRENT Ir @25°C & Vr (A)	Ir at T & Vr (A)	TEMP T (°C)	TEST VOLT Vr (V)	CAP. at ZERO VOLTS (F)	ABSOLUTE MAX RATING AVG. FWD I (A)	MAX. TEMP (°C)	MAT.	DESCRIPTION DWG. No.
1	ID6-050D	6 0	30n	10m	6 0	3 0K		120			5 0m	40	100u			6 0			75A	Ge*	DO7
2	ID6-050E	6.0	30n	10m	6.0	3 0K		120			5.0m	.60	100u			6 0			75A	Ge*	DO7
3	ID6-050T	6.0	30n	10m	6.0	3 0K		120			200m	1.0	100u			6 0			75A	Ge*	DO7
4	Q7-050	6 0	40n	10m	6.0	3.0K		120			10m	55	30u			6 0			75A	Ge*	DO7
5	MS2562A	6 0	500p∅	10m	6.0			100			20m	1 4 △					1 5p∅			GA	
6	MS2563A	6 0	500p∅	10m	6.0			100			20m	1 4 △					1.0p∅			GA	
7	Q6-100	6 0	50n	10m	6 0	3 0K		120			100m	1 0	100u			6 0			75A	Ge*	DO7
8	Q6-100A	6 0	50n	10m	6 0	3 0K		120			10m	50	100u			6 0			75A	Ge*	DO7
9	Q6-100B	6.0	50n	10m	6.0	3 0K		120			20m	50	100u			6.0			75A	Ge*	DO7
10	Q6-100C	6 0	50n	10m	6 0	3.0K		120			30m	52	100u			6 0			75A	Ge*	DO7
11	Q6-100D	6 0	.50n	10m	6.0	3 0K		120			5 0m	40	100u			6 0			75A	Ge*	DO7
12	Q6-100E	6 0	50n	10m	6.0	3 0K		120			5 0m	.60	100u			6.0			75A	Ge*	DO7
13	Q6-100F	6 0	50n	10m	6 0	3 0K		120			10m	55	5 0u			6 0			75A	Ge*	DO7
14	Q6-100G	6 0	50n	10m	6 0	3 0K		120			200m	1 0	5.0u			6 0			75A	Ge*	DO7
15	Q6-100H	6 0	50n	10m	6.0	3 0K		120			10m	50	5.0u			6 0			75A	Ge*	DO7
16	Q6-100T	6 0	50n	10m	6 0	3 0K		120			200m	1.0	100u			6 0			75A	Ge*	DO7
17	HT5-050	6 0	700p△	10m	6 0	3 0k		120			10m	45 ∅		100u	125	5 0				SG	A1by
18	HT5-050A	6 0	700p△	10m	6 0	3 0k		120			10m	50 ∅		100u	125	5 0				SG	A1by
19	HT5-050B	6 0	700p△	10m	6.0	3.0k		120			20m	45 ∅		100u	125	5 0				SG	A1by
20	HT5-050C	6 0	700p△	10m	6.0	3 0k		120			30m	.50 ∅		100u	125	5 0				SG	A1by
21	HT5-050T	6 0	700p△	10m	6.0	3 0k		120			250m	1.0 ∅		100u	125	5 0				SG	A1by
22	MS2022	6 0	1.0n	10m	6 0			100			20m	1 4	10u			6 0	1 5p∅		200	Ga	F27d
23	MS2023	6 0	1.0n	10m	6 0			100			20m	1.4	10u			6 0	1 0p∅		200	Ga	F27d
24	MS2542	6 0	1 0n	10m	6 0			100			20m	1 4	10u			6 0	1.5p∅		200	Ga	F27d
25	MS2543	6 0	1 0n	10m	6 0			100			20m	1 4	10u			6 0	1 0p∅		200	Ga	F27d
26	MS2562	6 0	1 0n	10m	6.0			100			20m	1 4	10u			6 0	1.5p∅		200	Ga	F84
27	MS2563	6 0	1.0n	10m	6 0			100			20m	1 4	10u			6.0	1 0p∅		200	Ga	F84
28	Q6-100I	6.0	1 0n	10m	6 0	3 0K		120			20m	50	5 0u			6 0			75A	Ge*	DO7
29	Q6-100J	6 0	1 0n	10m	6 0	3 0K		120			30m	.52	5.0u			6 0			75A	Ge	DO7
30	Q6-100K	6.0	1 0n	10m	6.0	3.0K		120			5.0m	40	5 0u			6 0			75A	Ge*	DO7
31	Q6-100L	6 0	1.0n	10m	6 0	3 0K		120			5 0m	60	5 0u			6 0			75A	Ge*	DO7
32	Q7-100	6 0	1 0n	10m	6 0	3 0K		120			10m	55	30u			6 0			75A	Ge*	DO7
33	Q5-500	6.0	2.0n	10m	6 0	3 0K		120			100m	1 0	100u			5 0			75A	Ge∅	DO7
34	Q6-200	6.0	2 0n	10m			1 0m				100m	1 0							75A		DO7
35	Q6-200A	6 0	2.0n	10m			1 0m				10m	50							75A		DO7
36	Q6-200B	6 0	2 0n	10m			1 0m				20m	50							75A		DO7
37	Q6-200C	6.0	2 0n	10m			1 0m				30m	40							75A		DO7
38	Q6-200D	6.0	2 0n	10m			1 0m				5 0m	60							75A		DO7
39	Q6-200E	6.0	2 0n	10m			1 0m				5 0m	55							75A		DO7
40	Q6-200F	6.0	2 0n	10m			1 0m				10m	1 0							75A		DO7
41	Q6-200G	6.0	2 0n	10m			1 0m				200m	50							75A		DO7
42	Q6-200H	6.0	2 0n	10m			1 0m				10m	50							75A		DO7
43	Q6-200I	6 0	2 0n	10m			1 0m				20m	52							75A		DO7
44	Q6-200J	6 0	2 0n	10m			1 0m				30m	40							75A		DO7
45	Q6-200K	6 0	2 0n	10m			1 0m				5 0m	60							75A		DO7
46	Q6-200L	6 0	2 0n	10m			1 0m				5 0m	1 0							75A		DO7
47	Q6-200T	6 0	2 0n	10m			1 0m				200m	1.0							75A		DO7
48	Q6-300	6 0	2.0n	10m			1 0m				10m	1 0							75A		DO7
49	Q6-300A	6 0	2 0n	10m			1 0m				20m	1 0							75A		DO7
50	Q6-300B	6 0	2 0n	10m			1 0m				30m	1 0							75A		DO7
51	Q6-400	6 0	2 0n	10m			1 0m				10m	1 0							75A		DO7
52	Q6-400A	6 0	2 0n	10m			1 0m				20m	1 0							75A		DO7
53	Q6-400B	6 0	2 0n	10m			1 0m				30m	1 0							75A		DO7
54	Q7-250	6 0	2.0n	10m	6 0	3 0K		120			10m	60	30u			6 0			75A	Ge*	DO7
55#	HD1872	6 0	4 0n								10m	46	30u			3 0	1.5p			Ge∅	DO7
56#	GSB100	6 0	5 0n	10m	2 0			50			100m	1 0	1 0u			5 0	1 0p∅		90	Ge	A201
57	Q6-250	6 0	5.0n	1 6m	3 0						200m	1 0	100u			6 0			75A	Ge∅	DO7
58#	HD1842	6 0	6.0n								10m	50	30u			3 0	1 5p			Ge∅	DO7
59	Q6-500	6 0	8 0n	1 6m	3 0						200m	1.0	100u			6 0			75A	Ge∅	DO7
60	1N994	6 5	2.0n∅	10m	6 0		3 0m∅	120	§		10m	1 0	30u			6 0		20m	100S	Ge∅	DO7
61	ID6-020	7 0	1.0n	10m	6 0	3 0K		120			80m	1 0	100u			6 0			75A	Ge*	DO7
62	CGD1420	7 5	16n#∅	10m							10m	50 △		5u	25	2.0	1 5p			Ge*	DO7
63	1N3483	8 0									10m	50	10u			3 0				Ge	DO7
64	ID8-050	8 0	50n	10m	6 0	3 0K		120			10m	55	100u			8 0			75A	Ge*	DO7
65	ID8-050A	8 0	50n	10m	6.0	3 0K		120			10m	50	100u			8 0			75A	Ge*	DO7
66	ID8-050B	8 0	.50n	10m	6 0	3 0K		120			20m	50	100u			8 0			75A	Ge*	DO7
67	ID8-050C	8 0	.50n	10m	6.0	3 0K		120			30m	70	100u			8 0			75A	Ge*	DO7
68	ID8-050D	8 0	50n	10m	6.0	3 0K		120			50m	1.0	100u			8 0			75A	Ge*	DO7
69	ID8-050T	8 0	50n	10m	6 0	3 0K		120			200m	1.0	100u			8 0			75A	Ge*	DO7
70	A516	8 0 ∅	60n∅	10m	6 0		1 0m†		§				1 0n			2 0	.75p∅		125A	GA	F11
71	HT6-100	8 0	700p△	10m	6.0	3 0k		120			10m	50 ∅		100u	125	6 0				SG	A1by
72	HT6-100A	8 0	700p△	10m	6 0	3 0k		120			10m	45 ∅		100u	125	6 0				SG	A1by
73	HT6-100B	8 0	700p△	10m	6 0	3 0k		120			20m	45 ∅		100u	125	6 0				SG	A1by
74	HT6-100C	8 0	700p△	10m	6 0	3 0k		120			30m	.50 ∅		100u	125	6 0				SG	A1by
75	HT6-100T	8 0	700p△	10m	6 0	3 0k		120			250m	1.0 ∅		100u	125	6 0				SG	A1by
76	Q8-200	8 0	3 0n	10m			1 0m				100m	1 0							75A		DO7
77	Q8-200A	8 0	3.0n	10m			1 0m				10m	.60							75A		DO7
78	Q8-200B	8 0	3 0n	10m			1.0m				20m	80							75A		DO7
79	Q8-200C	8 0	3 0n	10m			1 0m				30m	.90							75A		DO7
80	Q8-200D	8 0	3 0n	10m			1 0m				50m	1 0							75A		DO7
81	Q8-200T	8 0	3 0n	10m			1 0m				200m	1 0							75A		DO7
82	Q8-300	8 0	3 0n	10m			1 0m				10m	1 0							75A		DO7
83	Q8-300A	8 0	3 0n	10m			1 0m				20m	1 0							75A		DO7
84	Q8-300B	8 0	3 0n	10m			1 0m				30m	1 0							75A		DO7
85	1N993	8 0	4 0n	10m	6 0						10m	1 5	1 0u			6 0				Si	A1bz
86#	AAZ13	8 0	5 0n	10m	5.0	50K					30m	1 0	150u	19m	60	8.0				Ge∅	A3
87	G704	8 0	20n	10m	6 0						20m	55	5 0u			3.0				Ge∅	DO7
88	CGD1030	8 0	40n§								100m	85	15u			5 0	1 0p		90A	Ge	A1bz
89	1N3110	8 0	75n#	2 0m			20m				5 0m	45	20u	100m	65	8 0		50m	90A	Ge	DO7
90	MS2564A	9 0	500p∅	10m	6 0			100			20m	1.4 △					1 5p∅			GA	
91	MS2565A	9 0	500p∅	10m	6 0			100			20m	1 4 △					1 0p∅			GA	
92	HT7-100	9 0	700p△	10m	6 0	3 0k		120			10m	50 ∅		100u	125	7 0				SG	A1by
93	HT7-100A	9.0	700p△	10m	6 0	3 0k		120			10m	45 ∅		100u	125	7 0				SG	A1by
94	HT7-100B	9 0	700p△	10m	6 0	3 0k		120			20m	45 ∅		100u	125	7 0				SG	A1by
95	HT7-100C	9 0	700p△	10m	6.0	3.0k		120			30m	50 ∅		100u	125	7 0				SG	A1by
96	HT7-100T	9 0	700p△	10m	6 0	3 0k		120			250m	1 0 ∅		100u	125	7 0				SG	A1by
97	MS2024	9 0	1 0n	10m	6 0			100			20m	1 4	10u			9 0	1.5p∅		200	Ga	F27d
98	MS2025	9 0	1.0n	10m	6 0			100			20m	1 4	10u			9.0	1 0p∅		200	Ga	F27d
99	MS2544	9.0	1 0n	10m	6 0			100			20m	1.4	10u			9 0	1 5p∅		200	Ga	F27d
100	MS2545	9 0	1 0n	10m	6 0			100			20m	1 4	10u			9 0	1 0p∅		200	Ga	F27d
101	MS2564	9 0	1 0n	10m	6 0			100			20m	1 4	10u			9 0	1 5p∅		200	Ga	F84
102	MS2565	9 0	1.0n	10m	6 0			100			20m	1 4	10u			9 0	1 0p∅		200	Ga	F84
103	CGD1481	9.0	8 0n	10m			3 0m△		*		1 0m	35	10u			5 0	1 2p△		90A	Ge∅	DO7
104	G847	9 0	8 0n	10m			10m		*		50m	90 △		10u	25	5 0	1 2p△			Ge∅	DO7
105	HP5082-2900	10 ∅	12n§∅								20m	1 0	10u			5 0	1 5p∅		85	Si%♦	A1ad
106#	MA432	10	20n∅	10m	6 0						13m$	1 0	10u			10	80p∅		125J	%♦	A1cu
107	A517	10 ∅	30n∅	10m	6 0		1 0m†		§				1 0n			2 0	50p∅		125A	GA	F11
108#	CAY11	10	50n	10m	1 0		1 0m	50			10m	1 2 △	1 0u			3 0	1.2p*	30m	125	GA∅	DO7
109#	HD5000	10 $	500p	10m	6 0			2 0k			5 0m	1 0	200n	2 0u	100	5.0	1.0p∅	12m	100J	Si♦	DO35
110#	HD5001	10 $	500p	10m	6 0			2 0k			5 0m	1.0	1 0u	10u	100	5 0	1.0p∅	12m	100J	Si♦	DO35

SYMBOLS AND CODES EXPLAINED IN INTERPRETER

4. SWITCHING DIODES

IN ORDER OF (1) PIV, (2) RECOVERY TIME, and (3) TYPE No.

LINE No.	3 TYPE No	1 PIV (V)	RECOVERY TIME 2 Trr (s)	TEST CONDITIONS If (A)	Vr (V)	Zr (Ω)	Ir (A)	RL (Ω)	CKT	STORE TIME (s)	MIN. FORWARD CURRENT at 25°C IF (A)	at Vf (V)	MAX. REVERSE CURRENT Ir @25°C & Vr (A)	Ir at T & Vr (A)	TEMP T (°C)	TEST VOLT Vr (V)	CAP. at ZERO VOLTS (F)	ABSOLUTE MAX RATING AVG. FWD I (A)	MAX. TEMP (°C)	MAT.	DESCRIPTION DWG. No.
1#	HD5004	10 $	500p	10m	6 0			2 0k			2.0m	1 0	1 0u	20u	100	5 0	1.0p∅	12m	100J	Si♦	DO35
2	ID10-050	10	50n	10m	6 0	3 0K		120			10m	55	100u			10			75A	Ge*	DO7
3	ID10-050A	10	50n	10m	6 0	3 0K		120			10m	50	100u			10			75A	Ge*	DO7
4	ID10-050B	10	50n	10m	6 0	3 0K		120			20m	50	100u			10			75A	Ge*	DO7
5	ID10-050C	10	50n	10m	6 0	3 0K		120			30m	70	100u			10			75A	Ge*	DO7
6	ID10-050D	10	50n	10m	6 0	3 0K		120			50m	1.0	100u			10			75A	Ge*	DO7
7	ID10-050T	10	50n	10m	6.0	3 0K		120			200m	1 0	100u			10			75A	Ge*	DO7
8	MA4071B	10 ∅	50n*∅	10m			100m	100		10n#			1 0u			6 0	1.0p§		150A	Si	F27d
9	MA4372C	10 ∅	50n*∅	10m			100m	100		10n#			1 0u			6.0	1.5p§		150A	Si	DO7
10	HT8-100	10	700p△	10m	6 0	3 0k		120			10m	50 ∅		100u	125	8.0				SG	A1by
11	HT8-100A	10	700p△	10m	6 0	3 0k		120			10m	45 ∅		100u	125	8.0				SG	A1by
12	HT8-100B	10	700p△	10m	6 0	3 0k		120			20m	50 ∅		100u	125	8 0				SG	A1by
13	HT8-100C	10	700p△	10m	6 0	3 0k		120			30m	55 ∅		100u	125	8.0				SG	A1by
14	HT8-100T	10	700p△	10m	6 0	3 0k		120			250m	1 0 ∅		100u	125	8 0				SG	A1by
15	Q10-100	10	1 0n	10m	6 0	3 0K					100m	1.0	100u						75A	Ge	DO7
16	Q10-100T	10	1 0n	10m	6 0	3 0K					250m	1 0	100u						75A	Ge	DO7
17	1N4524	10	3.0n∅	10m			1 0mØ	50			1 0m	.35	12u			6.0	2 0p△		90S	Ge	DO7
18	ii1A12	10	3 0n∅	500m	40		50m	3 0			1 0m	20	10u			5 0	35p∅	200m	175A	Si	M214a
19	ii1A13	10	3 0n∅	500m	40		50m	3 0			1.0m	.20	10u			5.0	35p∅	300m	175A	Si	M214a
20	ii1A14	10	3 0n∅	500m	10		50m	3 0			1.0	250m	10u			5 0	35p∅	400m	125	Si	M214a
21	ii1A15	10	3 0n∅	500m	10		50m	3 0			1 0	250m	10u			5 0	100p∅	500m	125	Si	M214a
22	ii1A16	10	3 0n∅	500m	10		50m	3 0			1 0	250m	10u			5.0	100p∅	600m	125	Si	M214a
23	ii1A22	10	3 0n∅	500m	40		50m	3 0			1.0m	20	20u			5 0	35p∅	200m	175A	Si	M214a
24	ii1A23	10	3 0n∅	500m	40		50m	3 0			1.0m	.20	20u			5.0	35p∅	300m	175A	Si	M214a
25	ii1A24	10	3 0n∅	500m	10		50m	3 0			1 0	250m	20u			5 0	35p∅	400m	125	Si	M214a
26	ii1A25	10	3 0n∅	500m	10		50m	3 0			1 0	250m	20u			5 0	100p∅	500m	125	Si	M214a
27	ii1A26	10	3 0n∅	500m	10		50m	3 0			1 0	250m	20u			5.0	100p∅	600m	125	Si	M214a
28	ii1A52	10	3 0n∅	500m	40		50m	3 0			1 0m	.20	50u			5 0	35p∅	200m	175A	Si	M214a
29	ii1A53	10	3 0n∅	500m	40		50m	3 0			1.0m	20	50u			5.0	35p∅	300m	175A	Si	M214a
30	ii1A54	10	3 0n∅	500m	10		50m	3 0			1.0	250m	50u			5.0	35p∅	400m	125	Si	M214a
31	ii1A55	10	3 0n∅	500m	10		50m	3 0			1 0	250m	50u			5.0	100p∅	500m	125	Si	M214a
32	ii1A56	10	3 0n∅	500m	10		50m	3 0			1 0	250m	50u			5.0	100p∅	600m	125	Si	M214a
33	ii1B12	10	3 0n∅	500m	40		50m	3 0			1.0m	.27	10u			5 0	35p∅	200m	175A	Si	M214a
34	ii1B13	10	3 0n∅	500m	40		50m	3.0			1 0m	27	10u			5 0	35p∅	300m	175A	Si	M214a
35	ii1B14	10	3 0n∅	500m	10		50m	3 0			1.0	325m	10u			5 0	35p∅	400m	150	Si	M214a
36	ii1B15	10	3 0n∅	500m	10		50m	3 0			1.0	325m	10u			5.0	100p∅	500m	150	Si	M214a
37	ii1B16	10	3 0n∅	500m	10		50m	3 0			1 0	325m	10u			5.0	100p∅	600m	150	Si	M214a
38	ii1B22	10	3 0n∅	500m	40		50m	3 0			1 0m	27	20u			5.0	35p∅	200m	175A	Si	M214a
39	ii1B23	10	3 0n∅	500m	40		50m	3 0			1.0m	27	20u			5.0	35p∅	300m	175A	Si	M214a
40	ii1B24	10	3 0n∅	500m	10		50m	3 0			1 0	325m	20u			5.0	35p∅	400m	150	Si	M214a
41	ii1B25	10	3 0n∅	500m	10		50m	3 0			1 0	325m	20u			5.0	100p∅	500m	150	Si	M214a
42	ii1B26	10	3 0n∅	500m	10		50m	3.0			1 0	325m	20u			5.0	100p∅	600m	150	Si	M214a
43	ii1B52	10	3 0n∅	500m	40		50m	3 0			1.0m	27	50u			5.0	35p∅	200m	175A	Si	M214a
44	ii1B53	10	3.0n∅	500m	40		50m	3 0			1 0m	27	50u			5.0	35p∅	300m	175A	Si	M214a
45	ii1B54	10	3 0n∅	500m	10		50m	3 0			1.0	325m	50u			5.0	35p∅	400m	150	Si	M214a
46	ii1B55	10	3 0n∅	500m	10		50m	3.0			1 0	325m	50u			5 0	100p∅	500m	150	Si	M214a
47	ii1B56	10	3 0n∅	500m	10		50m	3 0			1 0	325m	50u			5.0	100p∅	600m	150	Si	M214a
48	Q10-200	10	3 0n	10m			1.0m				100m	1.0							75A		DO7
49	Q10-200A	10	3 0n	10m			1.0m				10m	65							75A		DO7
50	Q10-200B	10	3 0n	10m			1 0m				20m	.80							75A		DO7
51	Q10-200C	10	3 0n	10m			1.0m				30m	.90							75A		DO7
52	Q10-200D	10	3 0n	10m			1 0m				50m	1.0							75A		DO7
53	Q10-200T	10	3 0n	10m			1 0m				200m	1 0							75A		DO7
54	Q10-300	10	3 0n	10m			1.0m				10m	1.0							75A		DO7
55	Q10-300A	10	3 0n	10m			1 0m				20m	1 0							75A		DO7
56	Q10-300B	10	3 0n	10m			1.0m				30m	1 0							75A		DO7
57	Q10-500	10	3 0n	10m	6.0	3 0K		120			10m	.60	100u			10			75A	Ge*	DO7
58#	HD1871	10	3 5n	10m	6 0						100m	70	20u			5 0	1.5p*			Ge∅	DO7
59	Q10-250	10	5 0n	1 6m	3 0						100m	1.0	50u	.10m		10			75A	Ge	DO7
60	HD1812	10 †	9 0n								10m	.50	20u				1.5p			Ge∅	DO7
61	Q10-750	10	12n	1 6m	3 0						100m	1.0	100u						75A	Ge∅	DO7
62#	CG92AH	10	15n∅	10m	10	100					45m	1 0	10u	38u	55	10				Ge∅	DO7
63	Q10-950	10	15n	1 6m	3 0						100m	1.0	100u						75A	Ge∅	DO7
64	CGD592	10 †	100n	1 4m	3 0	30K		2k	△		1 4m	.30	4 0u			3 0			90A	Ge	A1bz
65#	2401	10 #	2 5u∅∅	30m	5 0	50K			∅		100m	1 5	5.0u			10			150J	Si*	A134
66	ID12-050	12	60n	10m	6 0	3 0K		120			10m	55	100u			12			75A	Ge*	DO7
67	ID12-050A	12	60n	10m	6 0	3 0K		120			10m	50	100u			12			75A	Ge*	DO7
68	ID12-050B	12	60n	10m	6.0	3 0K		120			20m	60	100u			12			75A	Ge*	DO7
69	ID12-050C	12	60n	10m	6.0	3 0K		120			30m	.70	100u			12			75A	Ge*	DO7
70	ID12-050D	12	60n	10m	6 0	3.0K		120			50m	1.0	100u			12			75A	Ge*	DO7
71	ID12-050T	12	60n	10m	6.0	3 0K		120			150m	1 0	100u			12			75A	Ge*	DO7
72	Q12-200	12	3 0n	10m			1 0m				10m	65							75A		DO7
73	Q12-200A	12	3 0n	10m			1 0m				10m	60							75A		DO7
74	Q12-200B	12	3 0n	10m			1 0m				20m	80							75A		DO7
75	Q12-200C	12	3 0n	10m			1 0m				30m	90							75A		DO7
76	Q12-200D	12	3 0n	10m			1 0m				50m	1 0							75A		DO7
77	Q12-200T	12	3 0n	10m			1.0m				150m	1 0							75A		DO7
78	Q12-300	12	3 0n	10m			1 0m				10m	1 0							75A		DO7
79	Q12-300A	12	3 0n	10m			1 0m				20m	1 0							75A		DO7
80	Q12-300B	12	3 0n	10m			1 0m				30m	1.0							75A		DO7
81	CGD1480	12	6 0n	10m			3.0m△		*		1.0m	33	6 0u			5 0	1.2p△		90A	Ge∅	DO7
82	G825	12	6 0n	10m			10m		*		50m	70 △		6u	25	5 0	1 2p△			Ge∅	DO7
83#	AAY33	12	7 0n	10m	1 0		1 0m	50			100m	70 △	10u	05m	60A	7.0	1.5p§†	100m	90A	Ge∅	DO7
84#	CG84H	12	40n	10m	10	1 0k					40m	60		38u	60	12	2.4p∅			Ge∅	A1bj
85	1N4008	12	70n△	10m	1 0				∅		10m	50	100u			20	3.0p∅		90	Ge∅	DO7
86#	CG85H	12	200n	10m	10	1 0k					40m	.60		38u	60	12	3.0p∅			Ge∅	A1bj
87	HP5082-0251	15 ∅	.10n*							60n§∅	40m	1.0 △	.01u			10	1.6p∅		175A	Si§	F27e
88	HP5082-0252	15 ∅	10n*							60n§∅	40m	1 0 △	.01u			10	2.1p∅		175A	Si§	F27e
89	PR0101	15 ∅	10n*∅	10m	10			100		10n§			.50u			5 0	1.0p∅		175A	Si§△	F27d
90	HP5082-0151	15 ∅	15n*∅							60n§∅	40m	1 0 △	01u			10	1.6p∅		175A	Si§	A1ac
91	MS5251-4A	15	150p∅														1.6p∅		175A	Si§△	F56h
92	MS5251-8	15	150p∅														1.6p∅		175A	Si§△	F27d
93	MS5251-16A	15	150p∅														1.6p∅		175A	Si§△	S268b
94	MS5252-4A	15	150p∅														2.1p∅		175A	Si§△	F56h
95	MS5252-8	15	150p∅														2.1p∅		175A	Si§△	F27d
96	MS5252-16A	15	150p∅														2.1p∅		175A	Si§△	S268b
97	PR0102	15 ∅	15n*∅	10m	10			100		10n§			.50u			5 0	1 5p∅		175A	Si§△	F27d
98	PR0103	15 ∅	20n*∅	10m	10			100		10n§			50u			5 0	2.0p∅		175A	Si§△	F27d
99	1N4392	15 †	.50n								2.0m	1 0	1.0u	02m	100	5 0	1.0p		105	Si	DO7
100	ID15-050	15	60n	10m	6 0	3 0K		120			10m	55	100u			15			75A	Ge*	DO7
101	ID15-050A	15	60n	10m	6 0	3 0K		120			10m	50	100u			15			75A	Ge*	DO7
102	ID15-050B	15	60n	10m	6 0	3 0K		120			20m	60	100u			15			75A	Ge*	DO7
103	ID15-050C	15	60n	10m	6.0	3 0K		120			30m	70	100u			15			75A	Ge*	DO7
104	ID15-050D	15	60n	10m	6 0	3 0K		120			50m	1 0	100u			15			75A	Ge*	DO7
105	ID15-050T	15	60n	10m	6 0	3 0K		120			150m	1.0	100u			15			75A	Ge*	DO7
106	FD777	15 #	.75n∅	10m			10m†	100			20m∅	1 0	10u	05m	100	8.0	1 3p∅	50m	150A	Si$	DO7
107	G158	15	2 0n	10m	6.0	1M		100			25m	50	40u			10	50p△		90A	Ge∅	DO7
108#	ZS140	15	2 0n	10m	5.0			50			10m	90	1.0u	25m	100	15	2.0p*	250m	175A	Si#	DO7
109	Q15-200	15	3 0n	10m			1 0m				10m	65							75A		DO7
110	Q15-200A	15	3 0n	10m			1.0m				10m	60							75A		DO7

SYMBOLS AND CODES EXPLAINED IN INTERPRETER

4. SWITCHING DIODES

IN ORDER OF (1) PIV, (2) RECOVERY TIME, and (3) TYPE No.

LINE No	TYPE No [3]	PIV [1] (V)	RECOVERY TIME [2] Trr (s)	TEST CONDITIONS If (A)	Vr (V)	Zr (Ω)	Ir (A)	RL (Ω)	CKT	STORE TIME (s)	MIN. FORWARD CURRENT at 25°C IF (A)	at Vf (V)	MAX. REVERSE CURRENT Ir @25°C & Vr (A)	Ir at T & Vr (A)	TEMP T (°C)	TEST VOLT Vr (V)	CAP. at ZERO VOLTS (F)	ABSOLUTE MAX RATING AVG. FWD I (A)	MAX. TEMP (°C)	MAT.	DESCRIPTION DWG. No.
1	Q15-200B	15	3 0n	10m			1 0m				20m	80							75A		DO7
2	Q15-200C	15	3 0n	10m			1 0m				30m	90							75A		DO7
3	Q15-200D	15	3.0n	10m			1 0m				50m	1 0							75A		DO7
4	Q15-200T	15	3 0n	10m			1 0m				150m	1 0							75A		DO7
5	Q15-300	15	3 0n	10m			1 0m				10m	1 0							75A		DO7
6	Q15-300A	15	3 0n	10m			1 0m				20m	1 0							75A		DO7
7	Q15-300B	15	3 0n	10m			1 0m				30m	1 0							75A		DO7
8#	HD1870	15	3 5n	10m	6 0						100m	70	15u			10	1 5p*			Geø	DO7
9#	BA168	15 ⊘	4 0n⊘	10m	6 0		1mø	100			10m	1 0 △	03u	.05m	150A	12	4 0p⊘	50m	200J	Si#	DO35
10#	BAW63B	15	4 0n⊘	10m	5 0			50			10m	900m	1 0u			15	4 0p⊘		175J	Si	M470
11	HMG993	15 ⊘	4 0n	10m	6 0		3mø				10m	1 2	1 0u			6 0	1 0p			Si	M208b
12#	AAY21	15	5 0n	3 0m	1 0		1 0m				10m	50	60u	10m	60	15	1 2p⊘	50m		Ge	DO7
13#	BAY31	15	5 0n	10m	10						30m	1 0	10u				6 0p⊘			Si#	DO7
14	1N995	15	6 0n⊘	10m	6 0		3mø	120			10m	1 0	10u			6 0				Geø	DO7
15	JAN1N995	15	6 0n	10m	6 0		3mø	120			10m	1.0	10u			6 0				Geø	DO7
16	1N4523	15	8 0n⊘	10m			1mø	50			1 0m	35	30u			10	1.5p△		90S	Ge	DO7
17	1N3944	15	12n⊘	3 0m	1 0		1mø	100			50m	1 5	60u	10m	60A	15	1 2p*⊘	20m	85A	Geø	DO7
18#	BAY52	15	15n	10m	6 0			100			20m	1 0	05u			10	8.0p⊘	100m	150S	Si$	DO7
19	G200	15	40n	2 0m			20m				100m	60	20u			10	50p△		90A	Geø	DO7
20	CGD1031	15	50nø								100m	85	25u			15	1 0p		90A	Ge	A1bz
21#	1S560	15	70n	20m	6 0	38K	20m	2k			40m	1 0	5.0u		25	2 0		40m	90	Ge	DO7
22#	SFD121	15	75n#	10m							10m	80	10u	50m	55	10		30m	85S	Geø	DO7
23#	OA92	15	100n	5 0m	5 0						3 0m	60	2 5u	01m	60		50p	10m	75A	Ge	A3
24	1N813	15	250n⊘	5.0m	10			1 0k			5 0m	1 0	500n	10u	125A	5 0			150A	Si	DO7
25	1N815	15	250n⊘	5.0m	10			1 0k			100m	1 5	500n	10u	125A	5 0			150A	Si	DO7
26#	19P1	15	250n⊘	10m			1 0m				100m	1 0 △	25u	15m	55	10		200m	85S	Ge	DO7
27	HMG813	15 ⊘	250n	5 0m	10		50mø		△		5 0m	1 0	50u	01m	125	5 0	2 0p			Si	M208b
28	1N3159	15 †	300n	30m	10		50mø	2k	△		10m	35		10m	75	10		80m	105	Ge	A1
29	1N698	15	500n	5.0m	5 0	2 0k					1 0m	21	1 0u	7 0u	60	1 5				Ge	DO7
30	1N1093	15	500n	5.0m	5 0	20k					5 0m	40		75u	55	15				Ge	DO7
31	1N571	15	4 0u	100m	5 0	20K					200m	1 0 △		.10m	55A		10p		75A	Ge	A9k
32	ID18-050	18	80n	10m	6 0	3 0K		120			10m	60	100u			18			75A	Ge*	DO7
33	ID18-050A	18	.80n	10m	6 0	3 0K		120			10m	50	100u			18			75A	Ge*	DO7
34	ID18-050B	18	80n	10m	6 0	3 0K		120			20m	60	100u			18			75A	Ge*	DO7
35	ID18-050C	18	80n	10m	6 0	3 0K		120			30m	80	100u			18			75A	Ge*	DO7
36	ID18-050D	18	.80n	10m	6 0	3 0K		120			50m	1 0	100u			18			75A	Ge*	DO7
37	ID18-050T	18	80n	10m	6 0	3 0K		120			120m	1 0	100u			18			75A	Ge*	DO7
38	1N3467	18	2 0n⊘	10m	6 0		10m	100	§		20m	50	15u			15			90A	Geø	DO7
39	1N3468	18	2 0n⊘	10m	6 0		10m	100	§		20m	50	60u			15			90A	Geø	DO7
40	Q18-200	18	4 0n	10m			1 0m				10m	65							75A		DO7
41	Q18-200A	18	4 0n	10m			1 0m				10m	60							75A		DO7
42	Q18-200B	18	4 0n	10m			1 0m				20m	80							75A		DO7
43	Q18-200C	18	4 0n	10m			1 0m				30m	90							75A		DO7
44	Q18-200D	18	4 0n	10m			1 0m				50m	1 0							75A		DO7
45	Q18-200T	18	4.0n	10m			1 0m				120m	1 0							75A		DO7
46	Q18-300	18	4 0n	10m			1 0m				10m	1 0							75A		DO7
47	Q18-300A	18	4 0n	10m			1 0m				20m	1 0							75A		DO7
48	Q18-300B	18	4.0n	10m			1 0m				30m	1 0							75A		DO7
49	CGD1471	18	20n	10m			3 0m△		*		1 0m	34	8 0u			5 0	80p△		90A	Geø	DO7
50	G824 *	18	·20n	10m			10m		*		50m	75 △		8u	25	5 0	80p△			Geø	DO7
51	DR459	18 *	200n	5 0m	6 0	20K			△		10m	50	200u			10				Geø	DO7
52#	1S1993	20	30p§⊘								50m	1 0	200n			10	1 0p⊘	100m	100	Si$♦	DO7
53#	1S1995	20	30p§⊘								70m	1 0	200n			10	1 0p⊘	150m	100	Si$♦	DO7
54	FGG1001	20 ⊘	07n*	10m	10					14n	75m	1 0	10u			10	1 0p		175A	Si$§	F27f△
55#	1S1857	20	80p*⊘	10m	10					1 9n$			10u			20	1 2p⊘	100m	150J	Si$§	F27a
56	JAN1N5165	20 $	100p⊘§	50m	20		300n		△		1 0m	500m△	300n	300u	150A	20	1 0p⊘	33m	150A	Si	A1ak
57	HP5082-2303	20 ⊘	10n§⊘	20m							50m	1 0 △	50u			15	1.2p⊘		125A	Si%♦	A1ad
58	1N4390	20 †	500p	10m	6 0			100			5 0m	1 0	200n	2 0u	100	5 0	1 0p		105	Si	DO7
59	1N4391	20 †	500p	10m	6 0			100			2 0m	1 0	200n	2 0u	100	5 0	1 0p		105	Si	DO7
60#	SFD2-471	20	.50n*⊘	10m			50m	100					10u			20	1 0p§		175S	Si	F27d
61	1N4244	20 #	.75n⊘	10m			10m†	100			20m	1 0	10u	10m	150	10	80p⊘	50m	150A	Si#	DO7
62	1N4376	20 ⊘	75n⊘	10m			10m†	100			50m⊘	1 1	10u	10m	150	10	1 0p⊘		150A	Si	DO7
63	JAN1N4376	20 ⊘	75n⊘	10m			1 0m†	100			.01m⊘	42	10u	10m	150	10	1 2p⊘	50m	150	Si	DO7
64#	BAY93	20	1 0n⊘	10m			10m				10m	1 0	0 1u			10	5 0p⊘		175J	Si	A60h
65	ID20-050	20	1.0n	10m	6 0	3 0K		120			50m	1 0	100u			20			75A	Ge*	DO7
66	ID20-050A	20	1 0n	10m	6 0	3 0K		120			10m	50	100u			20			75A	Ge*	DO7
67	ID20-050T	20	1 0n	10m	6 0	3 0K		120			100m	1 0	100u			20			75A	Ge*	DO7
68#	BAX90C/TF829	20	2 0n⊘	10m	6 0			100			5 0m	1 0	10u	10m	150	20	4 0p⊘	50m	175	Si	DO35
69	MS303	20 ⊘	2 0n#								35m	1 0	20u			12	8 0p		125		A1ad
70	1N903	20	4 0n⊘	10m	5 0			100			10m	1 0 △	100n	10u	100A	20	1 0p⊘		150S	Si	A1ce
71	1N906	20	4 0n⊘	10m	5 0			100			10m	1 0 △	100n	10u	100A	20	2 5p⊘		150S	Si	A1ce
72	1N3596	20	4 0n	10m			10m				30m	1 0	10u	10m	150	20	1 0p⊘			Si	DO7
73	HMG905	20 ⊘	4 0n	10m	5 0		1 0mø				10m	1 0	10u	01m	100	20	1 0pø			Si	M208b
74	HMG905A	20 ⊘	4 0n	10m	5 0		1 0mø				20m	1 0	10u	01m	100	20	1 0pø			Si	M208b
75	HMG906	20 ⊘	4 0n	10m	5 0		1 0mø				10m	1 0	10u	01m	100	20	2 5pø			Si	M208b
76	HMG906A	20 ⊘	4 0n	10m	5 0		1 0mø				20m	1 0	10u	01m	100	20	2 5pø			Si	M208b
77#	HS9503	20	4 0n	10m			10m	100					10u	10m	150A	10	4 0p	350m	200A	Si#$	A1y
78#	HS9506	20	4 0n	10m			10m	100					10u	10m	150A	10	4 0p	250m	200A	Si#$	A1y
79#	HS9509	20	4 0n	10m			10m	100					10u	10m	150A	10	4 0p	100m	200A	Si#$	A1y
80	HP5082-0103	20 ⊘	5 0n*⊘	10m	10		100m	50		250n§	100m	1 0 △	1 0u			18	20p⊘		175A	Si△	DO7
81	Q20-200	20	5.0n	10m			1 0m				50m	1 0							75A		DO7
82	Q20-200A	20	5 0n	10m			1 0m				10m	60							75A		DO7
83	Q20-200T	20	5 0n	10m			1.0m				100m	1 0							75A		DO7
84	Q20-300	20	5 0n	10m			1 0m				10m	1 0							75A		DO7
85	Q20-300A	20	5 0n	10m			1 0m				20m	1 0							75A		DO7
86	Q20-300B	20	5.0n	10m			1.0m				30m	1 0							75A		DO7
87#	BAW45	20 ⊘	6 0n⊘	5.0m			5 0m	100			5 0m	1 0 △	200n	200u	125	10	4 0p⊘	65m	150J	Si†	DO7
88#	HD1841	20	6 0n	10m	6 0						100m	70	20u			10	1 5p*			Geø	DO7
89	Q20-500	20	8 0n	1.6m	3.0						50m	1 0	100u			20			75A	Geø	DO7
90#	34P4	20	10n⊘	10m			10m†				15m	1.0 △	03u			10	4 0p⊘	75m	200J	Si#	DO35
91#	BAX89A/TF34	20	10n⊘	10m			10m				18m	1 0	03u			10	4 0p⊘	75m	175	Si	DO35
92	Q20-750	20	12n	1 6m	3 0						50m	1 0	100u			20			75A	Geø	DO7
93#	CG91AH	20	15nø	10m	10	10K					45m	1 0	20u	05m	55	15				Geø	DO7
94	Q20-950	20	15n	1 6m	3 0						50m	1 0	100u			20			75A	Geø	DO7
95	G703	20 §	30n	2.0m			20m				10m	45	10u			10	50p△		90A	Geø	DO7
96	1N4726	20 $	40n#	10m							10m	85	10u	01m	100	20	4 0p⊘		200S	Si	DO7
97	MHD619	20	40n#	10m							10m	85	10u	01m	100	20	4 0p⊘	150m	200S	Si	A1e
98#	BAX90A/TF827	20	50n⊘	30m			30m				5 0m	1.0	10u	10m	150	20	6.0p⊘	75m	175	Si	DO35
99	G199	20	50n	2 0m			20m				100m	70	10u			10	.50p△		90A	Geø	DO7
100#	1S307	20	100n⊘	2.0m			200u		⊘		75m	75	250u			15		100m	90A	Geø	A1bw
101	CGD309	20 †	100n	50m	1 5						300m	1 0		1 0m	25	25			90A	Ge	A1
102	TI6	20 †	100n⊘	10m			10m†		*		5 0m	1 0	1 0u	10m	100A	10	10p	25m	100	Si§△	DO16
103	1N252	20	150n	5.0m	10		25mø	1k	△		10m	1 0	10u	01m	125	5 0	80p	100m	150A	Si	DO7
104#	BAX88TF11	20	150n⊘	10m			10m†				4 0m	1.0	5.0u			10		75m	175A	Si	DO35
105	HMG252	20 ⊘	150n	5.0m	10		25mø		△		10m	1 0	10u	01m	125	5 0	2 0p⊘			Si	M208b
106#	1S1001	20	200n⊘	20m	6 0		16m	2k			40m	1 0	50u		25A	15	2 0p⊘		90J	Ge	A1ce
107	1N811	20	250n⊘	5 0m	10			1 0k			1.0m	1 0 △	1 0u	10u	125A	10			150A	Si	DO7
108	1N813M	20	250n	5.0m	10	20K					5 0m	1.0		01m	125	5.0				Si	A2a

SYMBOLS AND CODES EXPLAINED IN INTERPRETER

4. SWITCHING DIODES

IN ORDER OF (1) PIV, (2) RECOVERY TIME, and (3) TYPE No.

LINE No.	3 TYPE No.	1 PIV (V)	RECOVERY TIME 2 Trr (s)	TEST CONDITIONS If (A)	Vr (V)	Zr (Ω)	Ir (A)	RL (Ω)	CKT	STORE TIME (s)	MIN. FORWARD CURRENT at 25°C IF (A)	at Vf (V)	MAX. REVERSE CURRENT Ir @25°C & Vr (A)	Ir at T & Vr (A)	TEMP T (°C)	TEST VOLT Vr (V)	CAP. at ZERO VOLTS (F)	ABSOLUTE MAX RATING AVG. FWD I (A)	MAX. TEMP (°C)	DESCRIPTION MAT.	DWG. No.
1	1N815M	20	250n	5 0m	10	20K					100m	1 0	.50u	01m	125	5 0				Si	A2a
2#	1S79	20	250n	30m	5 0		30m	2k			8.0m	50	200u		25	20		100m	70	Ge	DO7
3	HMG811	20 ☑	250n	5 0m	10		50m∅		△		1 0m	1 0	1 0u	.01m	125	10	2.0p			Si	M208b
4	1N695	20	300n	5 0m	20						100m	1 0	2.0u	.02m	70	10		100m	75A	Ge∅	DO7
5	1N996	20	300n☑	5 0m	10		50m∅		△		40m	80	15u			15		50m	100S	Ge∅	DO7
6#	2702	20	300n☑	20m			2.0m		☑		7 5	1 8	100u			20	80p	2.5	150J	Si	S87e
7	1N770	20	350n	5.0m	10				†		15m	50	15u	.04m	40	10		40m	90S	Ge†	DO7
8	1N625A	20	500n	30m	35	400K					10m	1.5	.10u	03m	150	20				Si	DO7
9	1N2801	20	500n	100m			100m				100m	50	2 0u	40m	100	10		100m	100A	Ge	A182
10#	1S73	20	900n	10m	6.0		500u	2 0k			100m	1 0	55u			10			75A	Ge∅	DO7
11	1N3122	20	3.5u	300m	20	500K					10m	34	15u			10	1.8p	180m	75S	Ge	DO7
12	AAZ18	20	3.5u	300m	10						10m	41	15u	.05m	60	10		65m	60A	Ge∅	A3
13#	SFD4471	20	200u*☑	10m	10			100					10u			20	1.0p§		175S	Si	DO17
14#	1S460	22	3.0n☑	10m	6 0						10m	1 0	1.0u			20	4.0p☑	45m	175J	Si$#	DO7
15	PR0104	24 ☑	.15n*☑	10m	10			100		15n§			50u			15	1.0p☑		175A	Si$△	F27d
16	PR0105	24 ☑	.15n*☑	10m	10			100		15n§			.50u			15	1.5p☑		175A	Si$△	F27d
17	PR0106	24 ☑	20n*☑	10m	10			100		15n§			.50u			15	2.0p☑		175A	Si$△	F27d
18	MA4072B	24 ☑	50n*☑	10m			100m	100		25n#			1.0u			6.0	1.0p§		150A	Si	F27d
19	MA4373C	24 ☑	1.0n*☑	10m			100m	100		25n#			1 0u			6 0	1.5p§		150A	Si	DO7
20	CGD1470	24	15n	10m			3 0m△		*		1.0m	32	5.0u			5.0	.80p△		90A	Ge∅	DO7
21	G823	24	15n	10m			10m		*		50m	.65 △		5u	25	5.0	.80p△			Ge∅	DO7
22	HMG929	25 ☑									100m☑	1 0	10u			20				Si	M208b
23	HP5082-0253	25 ☑	.10n*							60n§☑	40m	1 0 △	01u			10	1.1p☑		175A	Si§	F27e
24#	1S1856	25	120p*☑	10m	10					2 7n$			10u			25	2.0p☑	150m	150J	Si§§	F27a
25	HP5082-0153	25 ☑	15n*☑							60n§☑	40m	1 0 △	01u			10	1.1p☑		175A	Si$	A1ac
26	HP5082-0254	25 ☑	15n*							60n§☑	40m	1.0 △	.01u			10	1.1p☑		175A	Si§	F27e
27	MS5253-4A	25	150p☑														1.1p☑		175A	Si$△	F56h
28	MS5253-8	25	150p☑														1.1p☑		175A	Si$△	F27d
29	MS5253-16A	25	150p☑														1.1p☑		175A	Si$△	S268b
30	HP5082-0154	25 ☑	20n*☑							60n§☑	40m	1 0 △	.01u			10	1.1p☑		175A	Si$	A1ac
31	MS5254-4A	25	200p☑														1.1p☑		175A	Si$△	F56h
32	MS5254-8	25	200p☑														1.1p☑		175A	Si$△	F27d
33	MS5254-16A	25	200p☑														1.1p☑		175A	Si$△	S268b
34#	1S1855	25	300p*☑	10m	10					2 7n$			10u			25	4.0p☑	150m	150J	Si§§	A1bw
35	HP5082-1003	25 ☑	1 5n☑	10m			10m†	50		50n§☑	100m	1 0	.20u	20m	150	20	2.0p☑		175A	Si$#	DO7
36	1N3146	25	2.0n	10m	6 0	3.0K		120			50m	1 0	100u			20				Ge∅	DO7
37	1N4009	25	2.0n☑	10m	6.0		1 0m∅	100			30m☑	1 0	10u	10m	150	25	4.0p☑	75m	200	Si	DO7
38	1N4043	25	2 0n☑	10m	6 0		1 0m∅	100			30m☑	1.0	10u	10m	150	25	4.0p☑	25m	200	Si	M50
39#	BAY60	25	2 0n	10m	6 0			100			30m	1.0 △	10u	25u	100A	25	4.0p☑		125A	Si#	A171f
40#	BAY94	25	2.0n☑	10m	6.0			100			30m	1.0	.10u	.10m	150	25	4.0p☑	115m	200	Si$#	A60h
41#	BAY97	25	2.0n	10m	6.0			100			30m	1 0 △	.10u	25u	100A	25	4.0p☑		125A	Si#	A83j
42	HP5082-1004	25 ☑	2 0n☑	10m			10m†	50		50n§☑	200m	1 0	20u	.20m	150	20	4.0p☑		175A	Si$#	DO7
43	KSD101-1,-2	25	2.0n☑	10m	6 0		10m†	100			30m	1.0	10u	05m	150	25	4.0p☑	75m	175A	Si$#	Z46
44	ii2A12	25	3 0n☑	500m	40		50m	3 0			1 0m	20	10u			13	35p∅	200m	175A	Si	M214a
45	ii2A13	25	3.0n☑	500m	40		50m	3 0			1 0m	.20	10u			13	35p∅	300m	175A	Si	M214a
46	ii2A14	25	3.0n☑	500m	25		50m	3 0			1 0	250m	10u			13	35p∅	400m	125	Si	M214a
47	ii2A15	25	3.0n☑	500m	25		50m	3 0			1 0	250m	10u			13	100p☑	500m	125	Si	M214a
48	ii2A16	25	3.0n☑	500m	25		50m	3 0			1 0	250m	10u			13	100p☑	600m	125	Si	M214a
49	ii2A22	25	3.0n☑	500m	40		50m	3.0			1 0m	20	20u			13	35p∅	200m	175A	Si	M214a
50	ii2A23	25	3 0n☑	500m	40		50m	3 0			1 0m	20	20u			13	35p∅	300m	175A	Si	M214a
51	ii2A24	25	3.0n☑	500m	25		50m	3 0			1.0	250m	20u			13	35p∅	400m	125	Si	M214a
52	ii2A25	25	3.0n☑	500m	25		50m	3.0			1 0	250m	20u			13	100p☑	500m	125	Si	M214a
53	ii2A26	25	3.0n☑	500m	25		50m	3 0			1.0	250m	20u			13	100p☑	600m	125	Si	M214a
54	ii2A52	25	3.0n☑	500m	40		50m	3 0			1.0m	20	50u			13	35p∅	200m	175A	Si	M214a
55	ii2A53	25	3.0n☑	500m	40		50m	3 0			1 0m	20	50u			13	35p∅	300m	175A	Si	M214a
56	ii2A54	25	3.0n☑	500m	25		50m	3 0			1 0	250m	50u			13	35p∅	400m	125	Si	M214a
57	ii2A55	25	3.0n☑	500m	25		50m	3 0			1 0	250m	50u			13	100p☑	500m	125	Si	M214a
58	ii2A56	25	3.0n☑	500m	25		50m	3 0			1.0	250m	50u			13	100p☑	600m	125	Si	M214a
59	ii2B12	25	3.0n☑	500m	40		50m	3 0			1 0m	.27	10u			13	35p∅	200m	175A	Si	M214a
60	ii2B13	25	3.0n☑	500m	40		50m	3.0			1.0m	.27	10u			13	35p∅	300m	175A	Si	M214a
61	ii2B14	25	3.0n☑	500m	25		50m	3.0			1.0	325m	10u			13	35p∅	400m	150	Si	M214a
62	ii2B15	25	3.0n☑	500m	25		50m	3 0			1 0	325m	10u			13	100p☑	500m	150	Si	M214a
63	ii2B16	25	3.0n☑	500m	25		50m	3.0			1.0	325m	10u			13	100p☑	600m	150	Si	M214a
64	ii2B22	25	3.0n☑	500m	40		50m	3 0			1.0m	27	20u			13	35p∅	200m	175A	Si	M214a
65	ii2B23	25	3.0n☑	500m	40		50m	3 0			1.0m	270m	20u			13	35p∅	300m	175A	Si	M214a
66	ii2B24	25	3.0n☑	500m	25		50m	3 0			1.0	325m	20u			13	35p∅	400m	150	Si	M214a
67	ii2B25	25	3.0n☑	500m	25		50m	3 0			1 0	325m	20u			13	100p☑	500m	150	Si	M214a
68	ii2B26	25	3.0n☑	500m	25		50m	3.0			1.0	325m	20u			13	100p☑	600m	150	Si	M214a
69	ii2B52	25	3 0n☑	500m	40		50m	3.0			1.0m	.27	50u			13	35p∅	200m	175A	Si	M214a
70	ii2B53	25	3 0n☑	500m	40		50m	3 0			1 0m	.27	50u			13	35p∅	300m	175A	Si	M214a
71	ii2B54	25	3 0n☑	500m	25		50m	3 0			1 0	325m	50u			13	35p∅	400m	150	Si	M214a
72	ii2B55	25	3 0n☑	500m	25		50m	3 0			1 0	325m	50u			13	100p☑	500m	150	Si	M214a
73	ii2B56	25	3.0n☑	500m	40		50m	3 0			1.0m	27	50u			13	100p☑	600m	175A	Si	M214a
74	1N4536	25 $	4.0n☑	10m	6 0		1 0m∅	100			30m	1 0	10u	10m	150A	25	4 0p☑		200S	Si$	A1e
75	1N4548	25 $	4.0n☑	10m	6 0		10m	100			30m	1.0	.10u	10m	150A	25	4 0p☑	100m	200S	Si#	DO18
76▼#	BAW99	25	4.0n☑	10m	3.0		1 0m	100			50m	1 1 △	100n	20u	125J	25	2.0p☑	50m	125J	Si#	M622
77#	BAX28	25	4.0n☑	10m			10m				30m	1 0 △	.10u	.10m	150	25	4 0p☑	75m	175J	Si#	TO72
78#	BAX30	25	4.0n☑	10m			10m				30m	10 △	.10u	.10m	150	25	4 0p☑	75m	175J	Si#	TO72
79	ii2C14	25	9.0n∅	500m	25		50m	3.0			1.0m	450m	10u			12	20p∅	400m	175	Si	M214a
80	ii2C15	25	9 0n∅	500m	25		50m	3.0			1.0m	450m	10u			12	20p∅	500m	175	Si	M214a
81	ii2C16	25	9 0n∅	500m	25		50m	3 0			1 0m	450m	10u			12	20p∅	600m	175	Si	M214a
82	ii2C24	25	9 0n∅	500m	25		50m	3 0			1 0m	450m	20u			12	20p∅	400m	175	Si	M214a
83	ii2C25	25	9.0n∅	500m	25		50m	3 0			1 0m	450m	20u			12	20p∅	500m	175	Si	M214a
84	ii2C26	25	9.0n∅	500m	25		50m	3 0			1 0m	450m	20u			12	20p∅	600m	175	Si	M214a
85	ii2C054	25	9.0n∅	500m	25		50m	3 0			1 0m	450m	5 0u			12	20p∅	400m	175	Si	M214a
86	ii2C055	25	9.0n∅	500m	25		50m	3 0			1 0m	450m	5 0u			12	20p∅	500m	175	Si	M214a
87	ii2C056	25	9 0n∅	500m	25		50m	3 0			1.0m	450m	5 0u			12	20p∅	600m	175	Si	M214a
88#	BAX74	25	10n☑	10m			10m				30m	1.0	1.0u	05m	60	30	4.0p☑		125J	Si#	M412
89#	AAY27	25	15n	20m			20m				30m	1.3 △	95u	25m	60	20	90p*☑		90J	Ge	DO7
90#	ZS40	25	15n$☑	10m	5.5						10m	1.2 △	500n	25u	100A	25	3 0p☑†			Si#	C1aa
91#	ZS40F	25	15n$☑	10m	5 5						10m	1 2 △	500n	25u	100A	25	3 0p☑†			Si#	C29e
92#	SX780	25	20n	10m	20					100n#	10m	1.5	10u	.05m	100	25	7 5p	50m	100S	Si*	C6
93▼#	BA174	25 †	35n☑	10m	6 0	100	1 0m				30m	1 0 △	100n	50u	100	25	4 0p☑	75m	125J	Si$	M597
94	1N3773	25	40n☑	2 0m			20m		☑		15m	.50	4.0u			3.0	1.2p△		100S	Ge∅	DO7
95	1N4547	25	60n§☑	10m			6.0m			150n∅☑	25m	1.0	01u			25	1.2p☑		175J	Si	F27d
96#	CG90H	25	60n∅	10m	10	.10K					45m	1.0	25u	10m	55	20	1 2p			Ge∅	A1bj
97	G198	25	60n	2.0m			20m				100m	.75	5 0u			10	50p△		90A	Ge∅	DO7
98	1N3592	25 ☑	70n☑	2 0m			20m∅				15m	50	4 0u	20m	25	20	1 0p☑		100	Ge∅	DO7
99	CGD1032	25	70n§								100m	85	30u			20	1 0p		90A	Ge	A1bz
100	1N4381	25 ☑	100n☑	2 0m			200u		☑		2 0m☑	.35	100u			20	1 2p☑*		100S	Ge	DO7
101▼#	BA167	25	200n☑	10m			10m	100			10m	1.0 △		1.0u	25A	20	5.0p☑		150A	Si	DO35
102#	CG83H	25	200n	10m	10	1 0K					100m	1.1		.15m	60	25	3 0p☑			Ge∅	A1bj
103	1N695A	25 $	300n	20m	6 0			2.0k			10m	500m	2.0u	20u	70A	10			90A	Ge	A1cw
104#	MGD47	25	300n☑	10m			10m	600			40m	970m	100				3.5p☑	100m	90J	Ge∅	DO7
105#	OA47	25	5 10n#	10m	5 0			1k			1.0m	33		.16m	60	25	3 5p☑		60A	Ge∅	A3
106	PD137	25	1 0u	30m	35	400K			∅		4 0m	1.5	30u	.10m	100	20		30m	150A	Si	A2
107	CGD1461	27	50n	10m			3.0m△		*		1.0m	.34	6 0u			5.0	60p△		90A	Ge∅	DO7
108	G822	27	50n	10m			10m		*		50m	.70 △		6u	25	5.0	60p△			Ge∅	DO7
109	1N789	27 *	500n	5 0m	20	200K			△	2 0u	10m	1 0	1 0u	.03m	100	20		120m	150A	Si△	A60p
110	1N791	27 *	500n	5 0m	20	200K			△	2 0u	50m	1 0	5.0u	03m	100	20		170m	150A	Si△	A60p

SYMBOLS AND CODES EXPLAINED IN INTERPRETER

4. SWITCHING DIODES

IN ORDER OF (1) PIV, (2) RECOVERY TIME, and (3) TYPE No.

LINE No.	3 TYPE No	1 PIV (V)	2 RECOVERY TIME Trr (s)	TEST CONDITIONS If (A)	Vr (V)	Zr (Ω)	Ir (A)	RL (Ω)	CKT	STORE TIME (s)	MIN. FORWARD CURRENT at 25°C IF (A)	at Vf (V)	MAX. REVERSE CURRENT Ir @25°C & Vr (A)	Ir at T & Vr (A)	TEMP T (°C)	TEST VOLT Vr (V)	CAP. at ZERO VOLTS (F)	ABSOLUTE MAX RATING AVG. FWD I (A)	MAX. TEMP (°C)	DESCRIPTION MAT.	DWG. No.
1	1N792	27 *	500n	5 0m	20	100K			△	2.0u	100m	1 0	5.0u	.03m	100	20		200m	150A	Si△	A60p
2#	BAY77	30		100m			100m	100		2.3n	100m	1 0	.10u	.10m	150	30	12p⊘	200m	175	Si	DO7
3#	FS36	30		10			.50		⊘	150 #⊘	10	1 0	40	100	70	10			70A	Ge⊘	DO7
4#	1S1992	30	30p§⊘								30m	1.0	200n			10	1.0p⊘	60m	100	Si$♦	DO7
5#	1S1994	30	30p§⊘								50m	1.0	200n			10	1.0p⊘	100m	100	Si$♦	DO7
6	1N4727	30 ⊘	40p#⊘	10m							10m	850m△	100n	10u	100A	20	4.0p⊘		200S	Si	DO35
7	HP5082-2301	30 ⊘	.1n§⊘	20m							50m	1.0 △	30u			15	1 0p⊘		125A	Si%♦	A1ad
8	HP5082-2302	30 ⊘	1n§⊘	20m							35m	1 0 △	.30u			15	1.0p⊘		125A	Si%♦	A1ad
9	HP5082-2305	30	10n§	20m							75m	1 0 △	.30u			15	1.0p⊘		125	%♦	A1ad
10	PR0107	30 ⊘	15n*⊘	10m	10			100		30n§			.50u			25	1 0p⊘		175A	Si$△	F27d
11#	XM541	30 ⊘	15n*⊘							30n							1.0p⊘§			Si	A1ac
12#	XM543	30 ⊘	15n*⊘							30n							60p⊘§			Si	A1ac
13	PR0108	30 ⊘	20n*⊘	10m	10			100		30n§			50u			25	1.5p⊘		175A	Si$△	F27d
14	PR0109	30 ⊘	20n*⊘	10m	10			100		30n§			50u			25	2.0p⊘		175A	Si$△	F27d
15	PR0110	30 ⊘	.25n*⊘	10m	10			100		30n§			50u			25	3.0p⊘		175A	Si$△	F27d
16♦#	BAX25	30	500p⊘	1 0m	1 0	100					15m	800m△	15n			3 0	1.0p⊘		125J	Si♦	DO7
17♦#	BAX26	30	500p⊘	10m	6 0	100					30	860m△	25n			3 0	2.0p⊘		125J	Si♦	DO7
18	FD700	30 #	70n⊘	10m			10m†	100			50m⊘	1 1	05u	05m	150	15	.75p⊘	50m	150A	Si$	DO7
19#	SFD2-472	30	.70n*⊘	10m			50m	100					10u			30	1.0p§		175S	Si	F27d
20	SG5800	30 #	.70n⊘	10m			10m	100			50m⊘	1 1	05u	05m	150	15	75p⊘	50m	150A	Si	DO7
21	1N4953	30 ⊘	1 0n§⊘	100m							100m	1 0 △	.50u			30	1.5p⊘		175A		F27e
22♦#	BAX27	30	1 0n⊘	10m	6 0	100					150	910m△	100n			10	7.0p⊘		125J	Si♦	DO7
23	1N3956	30	2 0n	10m	6.0	100K					10m	55	05u	05m	150	30	2.0p			Si	DO7
24	1N5219	30 $	2 0n⊘	10m			10m	100			50m	1.0 △	05u	05m	150	20	1 5p⊘		175S	Si	DO7
25	GP130	30	2 0n⊘	10m	6.0		1 0m⊘	100			1.0m	69 △	.05u	05m	150	20	2.0p⊘	75m	175	Si#	DO35
26	HMG3067	30 ⊘	2 0n	10m	6 0		1 0m⊘				5 0m	1 0	10u	10m	150	20	4.0p			Si	M208b
27	HMG9010	30	2 0n	10m	6 0		1.0m	100			10m	1 0	10u	10m	150	20	3.0p	150m	200A	Si$	M208b
28	LP100	30	2 0n⊘	10m	6 0		1.0m⊘	100			150m		10u			30	2.5p⊘		150	Si	A243a
29	MP2	30	2 0n⊘	10m	6 0			100			10m	55 △	10u	10m	150	30	1.5p	75m	150	Si$#	M117*
30	MQ2	30	2 0n⊘	10m	6 0			100			.10m	55 △	10u	10m	150	30	1 5p	75m	150	Si$#	M118*
31	MS301	30 ⊘	2.0n#								50m	1 0	20u			18	8 0p		125		A1ad
32	MS302	30 ⊘	2.0n#								35m	1 0	20u			18	8 0p		125		A1ad
33	SP101	30	2.0n⊘	10m	6 0		1.0m⊘	100	§		100m	1 0	25n	50u	150	20	2.0p		175A	Si	DO7
34#	ZS142	30	2 0n	10m	5 0			50			10m	90	1 0u	25m	100	30	2 0p*	250m	175A	Si#	DO7
35	1N917	30	3 0n	10m			10m				10m	1.0	05u	03m	100	10	2 5p⊘	50m	150A	Si	A1dh
36	1N904	30	4 0n⊘	10m	5 0			100			10m	1 0 △	100n	10u	100A	30	1.0p⊘		150S	Si	A1ce
37	1N905A	30	4 0n⊘	10m	5 0		1 0m⊘	100			20m	1 0	10u	01m	100	20	1.0p⊘⊘	300m	175A	Si△	A1ce
38	1N905AM	30	4 0n	10m	5 0	5 0K					20m	1 0	10u	01m	100	20	1.0p			Si	A2a
39	1N905M	30	4 0n	10m	5 0	5 0K					10m	1.0	10u	.01m	100	20	1 0p			Si	A2a
40	1N906A	30	4 0n⊘	10m	5 0		1 0m⊘	100			20m	1 0	10u	.01m	100	20	2.5p⊘⊘	300m	175A	Si△	A1ce
41	1N906AM	30	4 0n	10m	5 0	5 0K					20m	1 0	10u	01m	100	20	2 5p			Si	A2a
42	1N906M	30	4 0n	10m	5 0	5 0K					10m	1 0	10u	.01m	100	20	2 5p			Si	A2a
43	1N907	30	4.0n⊘	10m	5 0			100			10m	1 0 △	100n	10u	100A	30	2.5p⊘		150S	Si	A1ce
44	1N3067	30	4 0n⊘	10m	1 0		10m†	100			5 0m	1 0 △	.10u	.10m	150A	20	4.0p⊘		200S	Si	DO7
45#	1S1219	30	4.0n⊘	10m			10m				10m	80	10u		25	20		100m	175	Si	DO7
46#	1S1220	30	4.0n⊘	10m			10m				100m	1 0	10u		25	20		300m	175	Si	DO7
47#	1S1473	30	4 0n⊘	10m			10m				10m	80	.10u		25	20		100m	125	Si	DO7
48#	BAW63A	30	4 0n⊘	10m	5 0			50			10m	900m	1 0u			30	4.0p*⊘		175J	Si	M470
49	GP330	30	4 0n⊘	10m	6 0		1 0m⊘	100			300m	1.0 △	05u	05m	150	20	3 0p⊘	250m	175	Si#	DO35
50#	HDS9010	30	4 0n⊘	10m			10m				10m	1 0 △	.10u	10m	150A	20	3.0p⊘	75m	175A	Si#$	A1y
51	HMG904	30 ⊘	4 0n	10m	5 0		1 0m⊘				10m	1 0	10u	01m	100	30	1.0p⊘			Si	M208b
52	HMG904A	30 ⊘	4 0n	10m	5 0		1 0m⊘				20m	1.0	10u	01m	100	30	1.0p⊘			Si	M208b
53	HMG907	30 ⊘	4 0n	10m	5 0		1 0m⊘				10m	1 0	.10u	01m	100	30	2 5p⊘			Si	M208b
54	HMG907A	30 ⊘	4 0n	10m	5.0		1 0m⊘				20m	1 0	10u	.01m	100	30	2.5p⊘			Si	M208b
55	HMG3596	30 ⊘	4 0n	10m	10		1 0m⊘				30m	1.0	10u	10m	150	20	1.0p			Si	M208b
56#	HS9010	30	4 0n⊘	10m			10m				10m	1.0 △	10u	10m	150A	20	3 0p⊘	75m	175A	Si#$	DO7
57	MC53	30	4 0n	10m	6 0		1 0m	100			20m	1 0	.10u				4 0p⊘			Si	M409
58	MC905	30	4 0n	10m	5 0		1 0m	100			10m	1 0	10u	01m	100	20	1.0p⊘		175A		A2c
59	MC905A	30	4 0n	10m	5 0		1 0m	100			20m	1 0	10u	01m	100	20	1 0p⊘		175A		A2c
60	MC906	30	4 0n	10m	5 0		1 0m	100			10m	1 0	.10u	01m	100	20	2 5p⊘		175A		A2c
61	MC906A	30	4 0n	10m	5 0		1 0m	100			20m	1 0	10u	01m	100	20	2 5p⊘		175A		A2c
62#	MC5321	30	4 0n⊘	10m	6 0			100	⊘		30m	1 0	1.0u			30	4 0p⊘	100m	125	Si$#	A243
63#	MGD72	30	4 0n⊘	10m			10m	600			30m	1 0 △	200n	5 0u	100A	20	4 0p⊘	220m	200J	Si#	DO35
64#	SFD43	30	4 0n⊘	10m	6 0			100			10m	1 1 △	200n	50u	150A	10	4 0p⊘	15	200S	Si#	
65#	SFD83	30	4 0n	10	6 0			100			10m	1 1	200n	50	100	10	4.0p⊘	75m	175S	Si#	DO7
66	1N3603	30	5 0n	10m			10m				30m	1 0	10u	10m	150	35	3.0p⊘			Si	DO7
67#	BAY36	30	5 0n	10m	10						30m	1 0	10u			10	6 0p⊘			Si#	DO7
68	MCPD522A	30	5 0n	10m	6 0		1 0m				30m	1 0	100n	10u	100	20	4 0p⊘		150A	Si	M411
69	MCPD522B	30	5 0n	10m	6 0		1 0m				30m	1 0	100n	10u	100	20	4.0p⊘		150A	Si	M411a
70	MCPD522C	30	5 0n	10m	6 0		1 0m				30m	1 0	100n	10u	100	20	4.0p⊘		150A	Si	M277d
71#	HD1840	30	6 0n	10m	6 0						100m	75	10u			10	1.5p*			Ge⊘	DO7
72#	BAW53	30 ⊘	8 0n⊘	30m			30m	100			50m	1 0 △	200n	200u	125	20	5.0p⊘	15	150J	Si†$	DO7
73	HD1811	30 †	9 0n								10m	45	10u			10	1 5p			Ge⊘	DO7
74#	1N4147	30	10n	10m			1 0m⊘	100			30m	1 0		5 0u	25	30	6 0p		150S	Si	DO7
75	HD4101	30	10n	10m			1 0m				10m	1 0	20u			10	.60p	30m	90A	Ge	DO7
76	HMG4147	30 ⊘	10n	10m	10		1 0m⊘				30m	1 0	10u			20	6 0p			Si	M208b
77#	HS1395	30	10n⊘	10m			10m				10m	1 1 △	50n			10	6.0p⊘	75m	175A	Si#$	DO7
78	SG9150	30	10n⊘	10m			10m				10m	1 0 △	1 0u			25	10p⊘		150J	Si#	DO35
79	Q30-750	30	12n	1 6m	3 0						50m	1 0	100u			30			75A	Ge⊘	DO7
80	Q30-950	30	15n	1 6m	3 0						50m	1 0	100u			30			75A	Ge⊘	DO7
81	1N3068	30	50n⊘	30m			30m	100			5 0m	1 0 △	10u	10m	150A	20	6 0p⊘		200S	Si	DO7
82	AAY32	30	50n	10m	1 0			100			150m	1 0	70u	20m	60J	30	1 5p⊘*	110m	85J	Ge	DO7
83	HMG3068	30 ⊘	50n	30m	30		1 0m⊘				5.0m	1 0	10u	10m	150	20	6 0p			Si	M208b
84	MSC35A,B	30 ⊘	50n⊘				5 0m	100k			100u⊘	.50 △					10p⊘		150		Z49
85	MSC36A,B	30 ⊘	50n⊘				5 0m	100k			100u⊘	1 0 △					5.0p⊘		150		Z49
86	MSC37A,B	30 ⊘	50n⊘				5 0m	100k			100u⊘	1 5 △					3.0p⊘		150		Z49
87#	SFD105	30	80n#⊘	10m							10m	1.5	250u	.50m	55A	30		30m	85S	Ge⊘	DO7
88#	1S1544	30	100n⊘	10m	6 0			100	⊘		100m	1 0	1.0u			30	1.5 △	100m	175A	Si$	A1bw
89#	1S1545	30	100n⊘	10m	6 0			100	⊘		100m	1 0	1 0u			30	1 1 △	100m	175A	Si$	A1bw
90#	AAZ12	30 $	120n⊘	10m	10			1k		200n#	100m	.42	10u	115m	60	30	12p△	135m	75	Ge	C1ab
91	1N3668	30	150n	5 0m	10				△		5 0m	1 0		.01m	125	15	1 0p⊘			Si	DO7
92#	AG30	30	150n	10m			50m				60m	1 1	50u	100m	150	30	40p			Si	DO7
93	HMG251	30 ⊘	150n	5 0m	10		50m⊘		△		5 0m	1 0	.10u	.01m	125	10	1 0p⊘			Si	M208b
94	SFD122	30	160n	10m	0 0		50m				1 0m	25	50u	10m	55A	25		50m	85S	Ge⊘	DO7
95	1N4827	30 ⊘	200n	2 0m	10	100K		2k	△		40m	1 0	15u	35u	55	10			100S	Ge	DO7
96#	1S444⊘	30	200n⊘	10m	12						10m	500m	300u			25	1 0p⊘	90m	85J	Ge⊘	DO7
97#	BSA02	30	200n	10m	5 0	10K					10m	1.0	10u	10m	100	30	2 5p⊘			Si	A1
98	1N790	30 †	250n	5 0m	40	200K			△		10m	1 0	5 0u	03m	100	20				Si	A60p
99	1N790M	30	250n	5 0m	40	200K					10m	1 0	5 0u	03m	100	20				Si	A2a
100	1N811M	30	250n	5 0m	10	20K					1.0m	1.0		.01m	125	10				Si	A2a
101	1N812	30	250n⊘	5.0m	10			1 0k			2 0m	1 0 △	100n	10u	125A	10			150A	Si	DO7
102	HMG790	30 ⊘	250n	5.0m	20	200K			△		10m	1 0	5 0u	03m	100	20				Si	M208b
103	HMG812	30 ⊘	250n	5 0m	10		50m⊘		△		2 0m	1 0	10u	01m	125	10	2 0p			Si	M208b
104	1N3197	30 †	300n	5 0m	10		20m⊘	2k	△		5.0m	40		02m	55	10		80m	105	Ge	DO7
105#	BSA11	30 ⊘	300n	500m	30		3 0m⊘	1k			400m	1.0	25u	05m	150	30	7 5pt	400m	150A	Si§	A1
106	DR664	30 *	300n	5 0m	40	80K			△		20m	1 5	20u	01m	125	20				Si	DO7
107#	BSA01	30	400n	10m	5 0	10K					10m	1 0	10u	10m	100	30	2 5p⊘			Si	A1
108	1N789M	30	500n	5 0m	40	200K					10m	1 0	1 0u	03m	100	20				Si	A2a
109	1N791M	30	500n	5 0m	40	200K					50m	1 0	5 0u	03m	100	20				Si	A2a
110	1N792M	30	500n	5 0m	40	100K					100m	1 0	5.0u	03m	100	20				Si	A2a

SYMBOLS AND CODES EXPLAINED IN INTERPRETER

4. SWITCHING DIODES

IN ORDER OF (1) PIV, (2) RECOVERY TIME, and (3) TYPE No.

LINE No.	3 TYPE No.	1 PIV (V)	RECOVERY TIME 2 Trr (s)	TEST CONDITIONS If (A)	Vr (V)	Zr (Ω)	Ir (A)	RL (Ω)	CKT	STORE TIME (s)	MIN. FORWARD CURRENT at 25°C IF (A)	at Vf (V)	MAX. REVERSE CURRENT Ir @25°C & Vr (A)	Ir at T & Vr (A)	TEMP T (°C)	TEST VOLT Vr (V)	CAP. at ZERO VOLTS (F)	ABSOLUTE MAX RATING AVG. FWD I (A)	MAX. TEMP (°C)	DESCRIPTION MAT.	DWG. No.
1#	1N835	30	500n	5 0m	10	50K			△		100m	1 0		.20m	75	30	1 0p			Ge	DO7
2	1N3097	30	500n	25m	15	40K		2k	△		10m	50		.02m	25	30		50m	75	Ge	A1
3	1N4453	30 ☑	500n#☑	1 0m							100m	920m△	50n	50u	150A	20	30p☑		200S	Si	DO35
4	CSD2359	30	500n	5 0m	40	80K		2k	△		100m	1.5	25u	20m	100	30				Si	DO7
5	DR852	30 *	500n	5 0m	20	100K			△		3 0m	60	15u			20				Si	DO7
6	HMG625A	30 ☑	500n	30m	35	400K			△		10m	1.5	.10u	03m	150	20				Si	M208b
7	HMG789	30 ☑	500n	5.0m	20	200K			△		10m	1 0	1 0u	.03m	100	20				Si	M208b
8	HMG791	30 ☑	500n	5 0m	20	200K			△		50m	1 0	5 0u	.03m	100	20				Si	M208b
9	HMG792	30 ☑	500n	5.0m	20	100K			△		100m	1.0	5 0u	.03m	100	20				Si	M208b
10	PS720	30 †	500n☑	5 0m	10	100K		2 3k	△		3.0m	1 0	5.0u	.03m	100	20	3 0p†		150A	Si△	A60p
11	1N625	30 ☑	1 0u	30m	35	400K			∅		4 0m	1 5	1 0u	.03m	100	20		20m	150A	Si	A1bz
12	1N625M	30	1.0u	30m	35	400K					4.0m	1.5	1 0u	.03m	100	20				Si	A2a
13	CSD2315	30	1 0u	5 0m	40	400K		2k	△		5 0m	1.5	25u	20m	100	30				Si	DO7
14	HMG625	30 ☑	1 0u	30m	35	400K			△		4 0m	1.5	1 0u	03m	100	20				Si	M208b
15	PS700	30 †	1 0u	5.0m	10	100k		1 5k			100m	1 0	5 0u	30u	100	20		60m	150A	Si	DO14
16#	OA10	30	2.0u☑#	10m			10m∅	1k			30m	10	20u	.30m	60	30	10p△	100m	75A	Ge	C1ab
17#	2403	30 #	2 5u∅☑	30m	5 0	50K			∅		100m	1 5	5 0u			30			150J	Si*	A134
18	MSC32A,B	30 ☑	4.0u☑				5.0m	100k			100u☑	.58 △					15p☑		150	Si	Z49
19	MSC33A,B	30 ☑	4 0u☑				5.0m	100k			100u☑	1.2 △					8.0p☑		150		Z49
20	MSC34A,B	30 ☑	4 0u☑				5 0m	100k			100u☑	1.8 △					5.0p☑		150		Z49
21#	1S1216	30	150 ☑	2 0m			200u		☑		100m	1 0	200u			20	1.0 §	60m	90A	Ge∅	A1bw
22	HP5082-0242	35 ☑	.10n*							30n§§	100m	1.0 △	01u			10	2 0p☑		175A	Si$	F27d
23	HP5082-0243	35 ☑	.15n*							30n§§	150m	1 0 △	01u			10	2.0p☑		175A	Si$	F27d
24	MS5243-4A	35	150p☑														2.0p☑		175A	Si$△	F56h
25	MS5243-8	35	150p☑														2 0p☑		175A	Si$△	F27d
26	MS5243-16A	35	150p☑														2 0p☑		175A	Si$△	S268b
27	MS5242-4A	35	200p☑														2 0p☑		175A	Si$△	F56h
28	MS5242-8	35	200p☑														2.0p☑		175A	Si$△	F27d
29	MS5242-16A	35	200p☑														2 0p☑		175A	Si$△	S268b
30	1N4949	35 ☑	30n*☑	15m							150m	1 0 △	05u			30	3 0p☑		175A		DO7
31	HP5082-0112	35 ☑	.30n*☑							50n§	150m	1.0 △	50u			30	3.0p☑		175A	Si$△	DO7
32	MS5132-4A	35	300p☑														3 0p☑		175A	Si$△	F56h
33	MS5132-8	35	300p☑														3 0p☑		175A	Si$△	F27d
34	MS5132-16A	35	300p☑														3 0p☑		175A	Si$△	S268b
35#	MS7101	35 ☑	300p*							30m§	50m	1 0					2 0p		150J	Si$△	S250b
36#	MS7111	35 ☑	300p*							30m§	50m	1.0					2 0p		150J	Si$△	F27d
37	1N5164	35 ☑	.40n*☑								300m	1 0 △	05u			30	10p☑		175A	Si	DO7
38	HP5082-0114	35 ☑	40n*☑							125n§	300m	1 0 △	50u			30	10p☑		175A	Si$△	DO7
39	MS5134-4A	35	400p☑														10p☑		175A	Si$△	F56h
40	MS5134-8	35	400p☑														10p☑		175A	Si$△	F27d
41	MS5134-16A	35	400p☑														10p☑		175A	Si$△	S268b
42	1N5163	35 ☑	.50n*☑								200m	1.0 △	05u			30	10p☑		175A	Si	DO7
43	HP5082-0113	35 ☑	50n*☑							90n§	200m	1 0 △	50u			30	10p☑		175A	Si$△	DO7
44	MS5133-4A	35	500p☑														10p☑		175A	Si$△	F56h
45	MS5133-8	35	500p☑														10p☑		175A	Si$△	F27d
46	MS5133-16A	35	500p☑														10p☑		175A	Si$△	S268b
47	1N4456	35 ☑	1 5n☑	400m			400m†			.50n§☑	150m☑	1 0	20u	20m	150A	30	1 5p☑		175A	Si	DO7
48	HP5082-1001	35 ☑	1.5n☑	10m			10m†	50		.50n§☑	150m	1.0	20u	20m	150	30	1 5p☑		175A	Si$#	DO7
49	HMG4009	35 ☑	2 0n	10m	6.0		1 0m∅				30m	1 0	10u	10m	150	25	4 0p			Si	M208b
50	HMG4043	35 ☑	2.0n	10m	6 0		1 0m∅				30m	1.0	10u	10m	150	25	4.0p			Si	M208b
51	HMG4154	35 ☑	2 0n	10m	6.0		1 0m∅				30m	1.0	10u	.10m	150	25	4.0p			Si	M208b
52	HP5082-1002	35 ☑	2 0n☑	10m			10m†	50		50n§☑	300m	1 0	20u	20m	150	30	3 0p☑		175A	Si$#	DO7
53	Q30-500	35	2 0n	10m	6.0	3.0K		120			50m	1 0	600u			35			75A	Ge*	DO7
54	Q30-500A	35	2.0n	10m	6 0	3 0K		120			10m	.60	600u			35			75A	Ge*	DO7
55#	1S306	35	3 0n☑	10m	6 0			100	☑		10m	1 0	1.0u			30	4 0 ☑	60m	75A	Si$	A1bw
56	1N4154	35 ☑	4 0n☑	10m			10m				30m	1 0 △	100n	100u	150A	25	4 0p☑		200S	Si	DO35
57#	1S1588	35	4.0n☑	10m	6 0			50			100m	1 3	500n			30	3.0p	120m	175J	Si$#	A60g
58#	EA403	35 †	4.0n☑	10m			10m†				10m	1.0	10u	01m	100	25	4 0p☑	50m	150A	Si#	DO7
59#	ITT600	35	4.0n	10m	6 0		1 0m	100			200m	1 0 △	100n	100u	150	50	2 5p☑	200n	200J	#$	A1sy
60	Q30-200	35	5 0n	10m			1 0m				50m	1 0							75A		DO7
61	Q30-200A	35	5 0n	10m			1 0m				10m	.80							75A		DO7
62	Q30-300	35	5 0n	10m			1 0m				10m	1 0							75A		DO7
63	Q30-300A	35	5 0n	10m			1 0m				20m	1.0							75A		DO7
64	Q30-300B	35	5.0n	10m			1 0m				30m	1.0							75A		DO7
65#	BAY68	35	10n☑	10m			10m	100			100m	1 0	10u		25	25	5.0p☑	115m	175J	Si#	A60h
66	MC56	35	10n	10m	6 0		1 0m	100			400m	1 0	50n	25u	100	20	10p☑			Si	M409
67	MCPD524A	35	12n	10m			200u				400m	1 0	100n	25u	100	20	10p☑		150A	Si	M411
68	MCPD524B	35	12n	10m			200u				400m	1 0	100n	25u	100	20	10p☑		150A	Si	M411a
69	MCPD524C	35	12n	10m			200u				400m	1.0	100n	25u	100	20	10p☑		150A	Si	M277d
70	HP5082-0132	35 ☑	50n§							30n*☑	150m	1 0 △	50u			30	3.0p☑			Si$	F27ab
71#	ZC0112	35	50n▼					50		300p*☑			50n				3.0p☑			#	DO7
72#	ZC0132	35	50n▼					50		300p*☑			50n				3.0p☑			#	F27v
73#	ZC600	35	50n▼					50		700p*☑			50n				3.0p☑			#	DO7
74	HP5082-0133	35 ☑	90n§							40n*☑	200m	1 0 △	50u			30	10p☑			Si$	F27ab
75	HP5082-0134	35 ☑	125n§							50n*☑	300m	1 0 △	.50u			30	10p☑			Si$	F27ab
76	1N997	35	150n	10m	10		250u∅	1 0k	△		10m	1 0	30n	5.0u	150	12		50m	150A	Si	A1cs
77	FJT1000	35 ☑	250n☑	10m			10m†				10m	1 0 △	5 0n	500n	80A	5 0	1.3p☑		125A	Si#	C29b
78	FJT2000	35 ☑	250n☑	10m			10m†				10m	1 0 △	5 0n	500n	80A	5.0	1.3p☑		125A	Si#$	L1c*
79	DR498	35 *	300n	5 0m	20	40K			△		10m	36	10u			10				Ge∅	DO7
80	1N626A	35	500n	30m	35	400K					10m	1 5	10u	03m	150	35				Si	DO7
81	DR677	35 *	1.0u	30m	35	400k			∅		100m	1.0	500n	25u	100	20				Si	DO7
82#	1S951#	35	3 0 ☑	10m	6 0			100	☑		30m	1 0	1.0u			35	4.0 ☑	100m	175A	Si$#	A1d
83#	1S952△	35	3.0 ☑	10m	6 0			100	☑		100m	1 0	100n			35	4 0 ☑	150m	200A	Si$#	A1d
84#	1S953△	35	3 0 ☑	10m	6.0			100	☑		30m	1.0	100n			30	4.0 ☑	100m	200A	Si$#	A60g
85	CGD1460	36	35n	10m			3 0m△		*		1 0m	32	4 0u			5 0	.60p△		90A	Ge∅	DO7
86	G821	36	35n	10m			10m		*		50m	62 △		4u	25	5.0	.60p△			Ge∅	DO7
87	1N920	36	300n	500m	30			100			500m	1 0	.25u	05m	150	30		250m	175A	Si	DO7
88	1N690	36	800n	500m	30						400m	1 0	25u	05m	150	30		250m	175A	Si	DO7
89	1N948	36 †	1 0u	20m	40		50m∅	2k	△		100m	1.5	.25u	.02m	100	30		80m		Si	A1
90#	X6G551	40 ☑	.25n*☑							70n							2.0p§			Si	F27d
91#	SFD2-473	40	1.0n*☑	10m			50m	100					10u			40	1 0p§		175S	Si	F27d
92	1N3471	40	2.0n	10m			10m				10m	1 0	20n	5 0u	100	40	3 0p	5 0	200A	Si△	M58
93	1N4242	40	2.0n☑	10m	6.0		1.0m∅	100			10m	1.0	10u	10m	100	20	2 0p		200S	Si	M117a*
94	1N4243	40	2.0n☑	10m	6 0		1 0m∅	100			10m	1 0	10u	10m	100	20	2 0p		200S	Si	M117a*
95	1N4315	40 †	2.0n	10m	6.0		1 0m∅	100			.25m	53	10u	10m	150	30	4.0p☑		200	Si	A94a
96	1N4533	40 $	2.0n☑	10m	6 0		1 0m∅	100			10m☑	.81	.05u	.05m	150A	30	2.0p☑		200S	Si$	A1e
97	1N5412	40 ☑	2 0n☑	10m	6 0			100			.10m	.50 △	10u	10m	150A	30	2.0p☑	200m	175A	Si	DO35
98	HMG3605	40 ☑	2.0n	10m	6 0		1 0m∅				20m☑	88	05u	05m	150	30	2 0p			Si	M208a
99	HMG3608	40 ☑	2 0n	10m	6 0		1.0m∅				20m☑	88	05u	.05m	150	30	2 0p			Si	M208b
100	HMG3956	40 ☑	2 0n	10m	6 0		1 0m∅				20m☑	.88	05u	05m	150	30	2 0p			Si	M208b
101	HMG4152	40 ☑	2.0n	10m	6 0		1 0m∅				20m☑	88	50n	50u	150	30	2 0p			Si	M208b
102	SP102	40	2.0n☑	10m	6 0		1 0m∅	100	§		100m	1.0	25n	50u	150	30	2 0p		175A	Si	DO7
103	1N432	40	3.0n	30m	35	80K		2k	△		10m	1.0		3 0m	150	10	4.0p	55m	150A	Si∅	C3e
104	1N432A	40	3 0n	30m	35	80K		2k	△		20m	1.0		3.0m	150	10	5.0p	70m	150A	Si∅	C3e
105	1N432B	40	3 0n	30m	35	80K		2k	△		50m	1 0		3 0m	150	10	5.5p	85m	150A	Si∅	C3e
106	HMG917	40 ☑	3 0n	10m	10		1 0m∅				10m	1 0	05u	02m	100	20	2.5p			Si	M208b
107	1N904A	40	4 0n☑	10m	5 0		1 0m∅	100			20m	1 0	.10u	.01m	100	30	1 0p§☑	300m	175A	Si△	A1ce
108	1N904AM	40	4 0n	10m	5.0	5 0K					20m	1 0	.10u	.01m	100	30	1.0p			Si	A2a
109	1N904M	40	4 0n	10m	5.0	5 0K					10m	1.0	10u	01m	100	30	1 0p			Si	A1bz
110	1N905	40	4 0n☑	10m	5 0			100			10m	1 0 △	100n	10u	100A	40	1.0p☑		150S	Si	A1ce

SYMBOLS AND CODES EXPLAINED IN INTERPRETER

4. SWITCHING DIODES

IN ORDER OF (1) PIV, (2) RECOVERY TIME, and (3) TYPE No.

LINE No	TYPE No.	PIV (V)	RECOVERY TIME 2 Trr (s)	TEST CONDITIONS If (A)	Vr (V)	Zr (Ω)	Ir (A)	RL (Ω)	CKT	STORE TIME (s)	MIN. FORWARD CURRENT at 25°C IF (A)	at Vf (V)	MAX. REVERSE CURRENT Ir @25°C & Vr (A)	Ir at T & Vr (A)	TEMP T (°C)	TEST VOLT Vr (V)	CAP. at ZERO VOLTS (F)	ABSOLUTE MAX RATING AVG. FWD I (A)	MAX. TEMP (°C)	DESCRIPTION MAT.	DWG. No.
1	1N907A	40	4 0n∅	10m	5 0		1.0m∅	100			20m	1 0	10u	.01m	100	30	2 5p∅§	300m	175A	Si△	A1ce
2	1N907AM	40	4 0n	10m	5.0	5 0K					20m	1 0	10u	.01m	100	30	2.5p			Si	A2a
3	1N907M	40	4 0n	10m	5.0	5 0K					10m	1 0	.10u	.01m	100	30	2 5p			Si	A2a
4	1N908	40	4 0n∅	10m	5 0			100			10m	1 0 △	100n	10u	100A	40	2.5p∅		150S	Si	A1ce
5	1N3123	40	4.0n	10m	5 0		1 0m∅	100			10m	1.5	10u	10m	100	40	80p§∅	100m	150A	Si	DO7
6	1N3124	40	4.0n∅	10m	5.0			100			20m	1 0	10u			40	2 0p§∅	100m	150A	Si	DO7
7	1N3605	40	4 0n∅	10m			10m†				100u	550m△	50n	50u	150A	30	2 0p∅		200S	Si	DO7
8	1N3608	40	4 0n∅	10m			10m†				100u	550m△	50n	50u	150A	40	2 0p∅		200S	Si	M50
9	1N4152	40	4 0n∅	10m			10m				20m	880m△	50n	50u	150A	30	2.0p∅		200S	Si	DO35
10	1N4450	40 ∅	4 0n∅	10m			10m				200m	1 0 △	50n	50u	150A	30	4 0p∅		200S	Si	DO35
11	1N5319	40 ∅	4.0n∅	10m			10m†	100			100m	1 0 △	10u	10m	100	25	3 5p∅	100m	150A	Si	DO34
12	FDN666	40 ∅	4 0n	10m			10m†	100			100m	1 0 △	10u	10m	100	25	3 5p∅	100m	100A	Si#$	DO34
13	GP340	40	4 0n∅	10m	6 0		1 0m∅	100			300m	1 0 △	05u	05m	150	20	3.0p∅	250m	175	Si#	DO35
14	HMG903	40 ∅	4.0n	10m	5.0		1 0m∅				10m	1 0	10u	.01m	100	40	1 0p∅			Si	M208b
15	HMG903A	40 ∅	4 0n	10m	5.0		1 0m∅				20m	1 0	10u	01m	100	40	1 0p∅			Si	M208b
16	HMG908	40 ∅	4 0n	10m	5.0		1.0m∅				10m	1 0	10u	01m	100	40	2 5p∅			Si	M208b
17	HMG3123	40 ∅	4 0n	10m	5.0		1.0m∅				10m	1 5	10u	01m	100	40	80p∅			Si	M208b
18	HMG3124	40 ∅	4 0n	10m	5 0		1 0m∅				20m	1.0	10u	01m	100	40	2.0p∅			Si	M208b
19#	HS9502	40	4 0n	10m			10m	100					10u	10m	150A	20	4 0p	350m	200A	Si#$	A1y
20#	HS9505	40	4 0n	10m			10m	100					10u	10m	150A	20	4.0p	250m	200A	Si#$	A1y
21#	HS9508	40	4 0n	10m			10m	100					10u	10m	150A	20	4.0p	150m	200A	Si#$	A1y
22	MA4230	40 †	4 0n∅	10m	5.0		1 0m∅	100			10m	1 0	15u			20	2 0p∅	100m	150A	Si	A1
23	MC904	40	4 0n	10m	5.0		1 0m	100			10m	1.0	10u	01m	100	30	1 0p∅		175A		A2c
24	MC904A	40	4.0n	10m	5.0		1 0m	100			20m	1 0	10u	01m	100	30	1 0p∅		175A		A2c
25	MC907	40	4 0n	10m	5.0		1 0m	100			10m	1 0	10u	01m	100	30	2 5p∅		175A		A2c
26	MC907A	40	4 0n	10m	5.0		1.0m	100			20m	1 0	10u	01m	100	30	2 5p∅		175A		A2c
27	MT704	40	4 0n	10m	6.0		1 0m∅	100			100m	1 0	100n	25u	100	30	3 5p	200m	175A	Si	A60e
28	MT706	40	4 0n	10m			10m	100			200m	1 0	.05u	.05m	150	30	4 0p	200m	175A	Si	A60e
29	WS100	40	4 0n	10m	6.0			6 0			10m	1 0	10u	02m	150	30				Si	DO7
30	WS200	40	4.0n	10m	6.0	6 0k			§		10m	1 0	100n	15u	150	30				Si	DO7
31	1N696	40 ∅	5 0n∅	10m			10m†				10m	1 0	15n	20u	150	20	4 0p∅		150A	Si	A31
32▼#	1S2144	40	5 0n	10m	6.0						100m	1 2	1.0u			35		150m	150J	Si	A60u
33#	1S44△	40	6 0n	10m			10m†		*	50n#	10m	1.2	05u	1u	100	10	6 0p∅	75m	150S	Si△	A9g
34♦#	BAW24	40 †	6 0n∅	100m			100m				200m	1.4 △	100n	50u	100	40	4 0p∅	150m	200J	Si$	DO35
35♦#	BAW25	40 †	6 0n∅	100m			100m				200m	1 0 △	100n	50u	100	40	4 0p∅	150m	200J	Si$	DO35
36#	BAW59	40 ∅	6 0n∅	20			20	100			10	1 0 △	200n	20m	100	30	4 0p∅	40m	125J	Si†$	
37#	BAX87	40	6 0n	10m			10m†				10m	1.2	1 0u			10	6 0p∅	75m	150S	Si	A60h
38#	FDH666	40 ∅	6 0n∅	400m			400m†	100			100m	1 0 △	10u	10m	100	25	3 5p∅	100m	100A	Si#$	A1ap
39	S04	40	6 0n	10m			10m†				10m	1 1 △	50n	1 0u	100A	10	2 0p	75m	150S	Si△	A60b
40#	TF44	40	6 0n	10m			10m†				10m	1 2	1 0u			10	6 0p∅	75m	150S	Si	A60h
41	WS300	40	6 0n	10m	6 0	6 0k			§		100m	1 0	100n	15u	150	30				Si	DO7
42	1N3593	40	10n∅	10m	6 0		10m†		*		10m	1 0	03u	05m	150	10	4 0p	50m	150A	Si	A1c
43	1N4451	40 ∅	10n∅	10m			1 0m				300m	1 0 △	50n	50u	150A	30	6 0p∅		200S	Si	DO35
44	HMG3593	40 ∅	10n	10m	10		1 0m∅				10m	1 0	25n	50u	150	40	4.0p			Si	M208b
45	MT708	40	10n	10m			10m	100			300m	1 0	05u	05m	150	30	6 0p	200m	175A	Si	A60e
46	TI2	40	10n				1 0m∅				10m	1 0	03u	05m	150	10	4 0p	50m	150S	Si	A1c
47	Q40-750	40	12n	1 6m	3 0						50m	1 0	100u			40			75A	Ge∅	DO7
48#	BAY41	40	15n∅	200m			200m†				200m	1 0	05u			20	5.0p∅			Si$	A171f
49	Q40-950	40	15n	1 6m	3 0						50m	1.0	100u			40			75A	Ge∅	DO7
50	S502	40	15n	500m	30	10K		100			500m	1 0	05u			25	7 0p†		175A	Si△	DO7
51	S506	40	15n	500m	30	10		100			500m	1 0	50n			25	7 0p†		175A	Si△	DO7
52	S509	40	15n	500m	30	10K		100			500m	1 0	05u			25	7.0p†		175A	Si△	DO7
53	1N4452	40 ∅	20n∅	500m			500m				600m	1 0 △	50n	50u	150A	30	30p∅		200S	Si	DO35
54	MT710	40	20n	10m			10m	100			1 0	1 2	05u	05m	150	30	30p	200m	175A	Si	A60e
55	TID18	40 #	25n∅	200m			200m	100			100m	1 1 △	10u			15	4 0p∅	100m	150A	Si$#	TO18*
56	TID20	40 #	25n∅	200m			200m	100			100m	1 1 △	10u			15	7 0p∅	100m	150A	Si$#	TO18*
57	JAN1N251	40	30n	10m			10m	100			10m	1 0	10u	01m	100A	10	4.0p∅	14m	100A	Si	A1
58#	BAY99	40	50n	30m			30m†				50m	1 0	08u			30	6 0p∅	115m	175A	Si	DO35
59	1N251	40 §	150n	5 0m	10			1k	△		5 0m	1 0	20u	01m	100	10		75m	150A	Si	A1
60	1N925	40	150n∅	5.0m	10		10m	1k			5 0m∅	1 0	1 0u	02m	100	10	4 0p∅	120m	150A	Si△	A60p
61	1N926	40	150n∅	5 0m	10		10m	1k			5 0m∅	1 0	10u	.01m	100	10	4 0p∅	120m	150A	Si△	A60p
62	CGD553	40	150n	5 0m	20		90m	2k			100m	1 0		200m	25	20		100m	90	Ge∅	A1bz
63	HMG925	40 ∅	150n	5 0m	10	20K			△		5 0m	1 0	1 0u	02m	100	10	4 0p			Si	M208b
64	HMG926	40 ∅	150n	5 0m	10	20K			△		5 0m	1 0	10u	01m	100	10	4 0p			Si	M208b
65	PS7267	40	150n	5 0m	10		10m	2k	△		5 0m	1 0	1 0u	01m	100	10	4.0p	120m	200A	Si△	DO14
66	PS7268	40	150n	5 0m	10		10m	2k	△		5 0m	1 0	1.0u	01m	100	10	4 0p	120m	200A	Si△	DO14
67	1N194A	40 $	200n	30m	35			2.0k			1 0m	1 0	10u	300u	150A	40		30m§	150A	Si∅	A9k
68	1N3298	40	200n∅	500m	50	10K		2k			500m	90	20u			60	7 0p†		175A	Si△	DO7
69	1N812M	40	250n	5 0m	10	20K					2 0m	1 0		01m	125	10				Si	A2a
70	1N814	40	250n∅	5.0m	10			1 0k			2 0m	1 0	100n	10u	125A	20			150A	Si	DO7
71	HMG814	40 ∅	250n	5 0m	10		50m∅		△		2 0m	1 0	10u	01m	125	20	1 0p			Si	M208b
72	1N840	40	300n∅	30m	35	400K			△		150m	1 0	10u	02m	100	40	3 5p	150m	175A	Si	A1bz
73	1N3203	40	300n△	20m	4 0		25m				35m	50	50u			25		60m	90	Ge∅	DO7
74	1N3953	40	300n∅	20m	4 0		250u∅	2 0k			35m	50	50u	20u	55	40			90S	Ge	DO7
75#	1S78	40	300n	30m	5 0		30m	2k			50m	1 0	15u		25	10		80m	70	Ge	DO7
76	WA100	40	300n	30m	35	200k			△		400m	1 0	100n	15u	100	30				Si	DO7
77#	SFD129B	40	400n∅	10m			50m		∅	250n	500m	90	25u	20m	70A	40		150m	85S	Ge∅	DO7
78	1N781	40	500n∅	10m	10			2 0k			10m	450m△	5 0u	60u	65A	10			85A	Ge	A1cw
79	1N781A	40	500n∅	10m	10			2 0k			10m	450m△	5 0u	60u	65A	10			85A	Ge	A1cw
80	1N3225	40	500n	5 0m	10	50k			∅		5 0m	1 0	33u∅	664u	55	10				Ge	DO7
81	1N4861	40 ∅	1 0u∅	40m	10			2 0k			100m	1 2 △	2 0n	4 0u	150A	30	3 5p∅		200S	Si	DO35
82	DR419	40 *	1 0u	30m	5 0	25K			△		10m	5 0	20u			3.0				Si	DO7
83	HMG948	40 ∅	1 0u	20m	40		50m∅		△		100m	1 5	25u	02m	100	30				Si	M208b
84	SG215	40	1 0u	5.0m	40			2k	△		5 0m	15	25u	02m	100	30	2 0p	30m	150A	Si	A1
85	SG225	40	1 0u	20m	40			2k	△		100m	1 5	25u	02m	100	30	2 0p	80m	150A	Si	A1
86#	SFD4472	40	400u*∅	10m	10			100					10u			40	1 2p§		175S	Si	DO17
87#	1S1215	40	200 ∅	2 0m			200u		∅		100m	1 0	200u			30	1 0 §	60m	90A	Ge∅	A1bw
88#	1S500	43	3 0n∅	10m	6 0						10m	1 0	1.0u			40	4 0p∅	45m	175J	Si$#	DO7
89#	1S501	43	3 0n∅	10m	6 0						50m	1 0	1 0u			40	4 0p∅	75m	175J	Si$#	DO7
90#	1S443∅	43	2 0u∅	20m	12						20m	500m	20u			10	2.0p∅	120m	85J	Ge∅	DO7
91	PR0111	45 ∅	35n*∅	10m	10			100		50n§			50u			40	8 0p∅		175A	Si$△	F27d
92	PR0112	45 ∅	50n*∅	10m	10			100		50n§			50u			40	10p∅		175A	Si$△	F27d
93	Q40-500	45	3 0n	10m	6 0	3 0K		120			50m	1 0	600u			45			75A	Ge*	DO7
94	Q40-500A	45	3.0n	10m	6 0	3.0K		120			10m	60	600u			45			75A	Ge*	DO7
95	MMD7001	45 ∅	3 2n	10m	5 0		10m†				500m	1 1 △	100n			30	2 5p		135J	Si$	M445c*
96	Q40-200	45	5 0n	10n			1 0m				50m	1 0							75A		DO7
97	Q40-200A	45	5 0n	10m			1 0m				10m	80							75A		DO7
98	Q40-300	45	5 0n	10m			1 0m				10m	1 0							75A		DO7
99	Q40-300A	45	5 0n	10m			1 0m				20m	1 0							75A		DO7
100	Q40-300B	45	5 0n	10m			1.0m				30m	1 0							75A		DO7
101#	37P4	45	6 0n∅	10m			10m†				20m	1 0 △	01u			20	2.0p∅	75m	200J	Si#	DO35
102#	BAX89C-TF37	45	6 0n	10m			10m				20m	1 0	10n			20	2 0p	75m	175	Si	DO35
103#	BAX89B/TF35	45	25n∅	10m			10m				20m	1 0	01u			20	2 0p∅	75m	175	Si	DO35
104	MA4374C	48 ∅	2 0n*∅	10m			100m	100		35n#			1 0u			6 0	1 5p§		150A	Si	DO7
105	HMG4092	50 ∅									5 0m	1 0	1 0u	5 0u	70	20	10p∅			Si	M208b
106#	XM542	50 ∅	25n*∅							50n							1 0p∅§			Si	A1ac
107#	XM544	50 ∅	25n*∅							50n							60p∅§			Si	A1ac
108	1N4457	50 ∅	1.5n∅	400m			400m†			.50n§∅	200m∅	1 0	20u	20m	150A	40	1 1p∅		175A	Si	DO7
109	HP5082-1006	50 ∅	1 5n∅	10m			10m†	50			150m	1 0	20u	20m	150	35	1 1p∅		175A	Si$#	DO7
110	1N4380	50	1 8n∅	570m			1 0m∅	10k			570m	1 4	50u			50	3 0p†∅		175S	Si	DO7

SYMBOLS AND CODES EXPLAINED IN INTERPRETER

4. SWITCHING DIODES

IN ORDER OF (1) PIV, (2) RECOVERY TIME, and (3) TYPE No.

LINE No.	3 TYPE No	1 PIV (V)	2 RECOVERY TIME Trr (s)	TEST CONDITIONS If (A)	Vr (V)	Zr (Ω)	Ir (A)	RL (Ω)	CKT	STORE TIME (s)	MIN. FORWARD CURRENT at 25°C IF (A)	at Vf (V)	MAX. REVERSE CURRENT Ir @25°C & Vr (A)	Ir at T & Vr (A)	TEMP T (°C)	TEST VOLT Vr (V)	CAP. at ZERO VOLTS (F)	ABSOLUTE MAX RATING AVG. FWD I (A)	MAX. TEMP (°C)	DESCRIPTION MAT.	DWG No.
1	JAN1N4153	50	2.0n☑	10m			10m	100			.10m	49 △	05u	05m	150	50	2.0p☑	150m	200A	Si	A1ap
2	1N4306	50	2.0n☑	10m	6 0			100			10m☑	55	.05u	05m	150	50	1.0p	75m	150	Si$#	M117*
3	1N4307	50	2.0n☑	10m	6.0			100			10m☑	.55	.05u	.05m	150	50	1.0p	75m	150	Si$#	M118*
4	1N4309	50 ☑	2.0n	10m	6 0		1 0m☑	100			25m	53	10u	10m	150A	30	4.0p☑	250m	175A	Si$#	DO7
5	1N4534	50 $	2.0n☑	10m	6.0		1 0m☑	100			10m☑	.81	.05u	05m	150A	50	2.0p☑		200S	Si$	A1e
6	JAN1N4534	50	2.0n☑	10m			10m	100			10m	49 △	.05u	05m	150	50	2 0p☑	150m	200A	Si	A1ı
7#	BAX91A/TF100	50	2.0n☑	10m	6 0			100			10m	1 0	.10u	10m	150	50	2.0p☑	75m	175	Si	DO35
8#	BAX91B/TF101	50	2 0n☑	10m	6.0			100			20m	1 0	.10u	10m	150	50	3.0p☑	50m	175	Si	DO35
9#	BAY95	50	2.0n☑	10m	6 0			100			30m	1 0	05u	05m	150	50	2.0p☑	150m	200	Si$#	A60h
10	GP150	50	2 0n☑	10m	6 0		1 0m☑	100			1.0m	.69 △	.05u	05m	150	20	2.0p☑	75m	175	Si#	DO35
11	HMG9006	50 ☑	2.0n	10m	6 0		1 0m	100			300m	1.0	.10u	.10m	150	40	3.0p	150m	200A	Si$	M208b
12	HMG9007	50 ☑	2.0n	10m	6.0		1 0m	100			200m☑	1.0	10u	.10m	150	40	2 0p	150m	200A	Si$	DO7
13	HMG9008	50 ☑	2.0n	10m	6.0		1 0m	100			100m☑	1 0	10u	10m	150	40	2.0p	150m	200A	Si$	M208b
14	HMG9009	50 ☑	2.0n	10m	6.0		1 0m	100			20m	1.0	10u	.10m	150	40	2 0p	150m	200A	Si$	M208b
15	MA4245	50	2.0n☑	10m	6 0		1 0m☑	100			30m	1 0	10u	.10m	150	50	2.0p☑	75m	175A	Si△	A1
16	MHD618	50	2.0n☑	10m	6 0			100			50m	1 0	50n	50u	150	50	2.0p☑	150m	200	Si	A1e
17	SCSDM05L	50	2.0n	500m			1 0				50	1.1 △	13u	500u	100A	50		50	150A	Si	M493
18	SCSDM05W	50	2.0n	500m			1 0				50	1.1 △	13u	500u	100A	50		50	150A	Sı	M492
19	SCSM05	50	2.0n	500m			1 0				100	1.1 △	25u	1 0m	100A	50		100	150A	Si	S305☑
20	SCSNM05L	50	2.0n	500m			1 0				50	1 1 △	13u	500u	100A	50		50	150A	Si	M493
21	SCSNM05W	50	2.0n	500m			1 0				50	1 1 △	13u	500u	100A	50		50	150A	Si	M492
22	SCSPM05L	50	2.0n	500m			1 0				50	1 1 △	13u	500u	100A	50		50	150A	Si	M493
23	SCSPM05W	50	2.0n	500m			1 0				50	1 1 △	13u	500u	100A	50		50	150A	Si	M492
24	SP103	50	2.0n☑	10m	6.0		1 0m☑	100	§		100m	1.0	02u	.05m	150	40	2 0p		175A	Sı	DO7
25#	ZS141	50	2.0n	10m	5.0			50			10m	90	1.0u	25m	100	50	2 0p*	250m	175A	Si#	DO7
26	1N4087	50	2 5n	10m	6 0		1 0m☑	50			30m	.98	09u	10m	150	50	1.8p☑		200S	Sı	DO7
27	JAN1N4087	50 †	2.5n☑	10m	6.0		10m	50			5 0m	67 △	100n	15u	100A	50	2 0p☑	75	175A	Si	DO7
28#	BAX93TF71	50	3.0n☑	10m	6.0			100			50m	1.0	02u	.01m	100	20		75m	175	Si	DO35
29	ıı5A12	50	3 0n☑	500m	40		50m	3.0			1 0m	20	10u			25	35p∅	200m	175A	Si	M214a
30	ıı5A13	50	3.0n☑	500m	40		50m	3 0			1.0m	.20	10u			25	35p∅	300m	175A	Si	M214a
31	ıı5A14	50	3.0n☑	500m	40		50m	3.0			1.0m	20	10u			25	35p∅	400m	175A	Si	M214a
32	ıı5A15	50	3.0n☑	500m	40		50m	3 0			1 0m	.20	10u			25	100p☑	500m	175A	Sı	M214a
33	ıı5A16	50	3.0n☑	500m	40		50m	3.0			1 0m	20	10u			25	100p☑	600m	175A	Si	M214a
34	ıı5A22	50	3 0n☑	500m	40		50m	3 0			1 0m	20	20u			25	35p∅	200m	175A	Si	M214a
35	ıı5A23	50	3.0n☑	500m	40		50m	3 0			1 0m	20	20u			25	35p∅	300m	175A	Si	M214a
36	ıı5A24	50	3.0n☑	500m	40		50m	3.0			1 0m	20	20u			25	35p∅	400m	175A	Si	M214a
37	ıı5A25	50	3.0n☑	500m	40		50m	3 0			1.0m	.20	20u			25	100p☑	500m	175A	Si	M214a
38	ıı5A26	50	3 0n☑	500m	40		50m	3 0			1 0m	.20	20u			25	100p☑	600m	175A	Si	M214a
39	ıı5A52	50	3.0n☑	500m	40		50m	3.0			1 0m	20	50u			25	35p∅	200m	175A	Si	M214a
40	ıı5A53	50	3.0n☑	500m	40		50m	3 0			1 0m	.20	50u			25	35p∅	300m	175A	Si	M214a
41	ıı5A54	50	3.0n☑	500m	40		50m	3 0			1 0m	.20	50u			25	35p∅	400m	175A	Si	M214a
42	ıı5A55	50	3.0n☑	500m	40		50m	3 0			1.0m	.20	50u			25	100p☑	500m	175A	Si	M214a
43	ıı5A56	50	3.0n☑	500m	50		50m	3.0			1 0	250m	50u			25	100p☑	600m	125	Si	M214a
44	ıı5B12	50	3 0n☑	500m	40		50m	3 0			1.0m	.27	10u			25	35p∅	200m	175A	Sı	M214a
45	ıı5B13	50	3.0n☑	500m	40		50m	3 0			1 0m	27	10u			25	35p∅	300m	175A	Si	M214a
46	ıı5B14	50	3 0n☑	500m	50		50m	3 0			1 0	250m	10u			25	35p∅	400m	150	Si	M214a
47	ıı5B15	50	3 0n☑	500m	50		50m	3 0			1 0	250m	10u			25	100p☑	500m	150	Si	M214a
48	ıı5B16	50	3 0n☑	500m	50		50m	3 0			1 0	325m	10u			25	100p☑	600m	150	Si	M214a
49	ıı5B22	50	3 0n☑	500m	40		50m	3 0			1 0m	.27	20u			25	35p∅	200m	175A	Si	M214a
50	ıı5B23	50	3 0n☑	500m	40		50m	3 0			1 0m	27	20u			25	35p∅	300m	175A	Si	M214a
51	ıı5B24	50	3.0n☑	500m	50		50m	3.0			1 0	325m	20u			25	35p∅	400m	150	Si	M214a
52	ıı5B25	50	3.0n☑	500m	50		50m	3.0			1 0	325m	20u			25	100p☑	500m	150	Si	M214a
53	ıı5B26	50	3 0n☑	500m	50		50m	3 0			1 0	325m	20u			25	100p☑	600m	150	Si	M214a
54	ıı5B52	50	3.0n☑	500m	40		50m	3.0			1 0m	27	50u			25	35p∅	200m	175A	Si	M214a
55	ıı5B53	50	3.0n☑	500m	40		50m	3 0			1 0m	27	50u			25	35p∅	300m	175A	Si	M214a
56	ıı5B54	50	3.0n☑	500m	50		50m	3 0			1 0	325m	50u			25	35p∅	400m	150	Si	M214a
57	ıı5B55	50	3 0n☑	500m	50		50m	3 0			1 0	325m	50u			25	100p☑	500m	150	Si	M214a
58	ıı5B56	50	3 0n☑	500m	50		50m	3 0			1 0	325m	50u			25	100p☑	600m	150	Si	M214a
59	1N903A	50	4 0n☑	10m	5 0		1 0m☑	100			20m	1 0	10u	.01m	100	40	1 0p§☑	300m	175A	Si△	A1ce
60	1N903AM	50	4 0n	10m	5 0	5.0K					20m	1 0	10u	.01m	100	40	1 0p			Si	A2a
61	1N903M	50	4 0n	10m	5 0	5.0K					10m	1 0	10u	01m	100	40	1 0p			Si	A2a
62	1N908A	50	4.0n☑	10m	5 0		1 0m☑	100			20m	1.0	10u	01m	100	40	2.5p§☑	300m	175A	Si△	A1ce
63	1N908AM	50	4 0n	10m	5 0	5 0K					20m	1.0	10u	01m	100	40	2.5p			Sı	A2a
64	1N908M	50	4 0n	10m	5 0	5 0K					10m	1 0	.10u	.01m	100	40	2.5p			Si	A2a
65	JAN1N3064	50 $	4.0n☑	10m			10m	100			10m	1 0 △	10u	.10m	150A	50	2 0p☑	75m	200S	Si	A1da
66	1N3600	50	4 0n☑	200m			200m				200m	1.0 △	10u	.10m	150A	50	2 5p☑		150A	Si	DO7
67	1N3873	50	4 0n☑	10m			10m				150m	.95	100n	5.0u	100	50	4 0p	150m	175A	Si#	DO7
68	1N3873HR	50	4 0n☑	10m			10m†				150m☑	1.1	100n	5.0u	100	50	4.0p☑	150m	175A	Si#	DO7
69	1N3954	50	4.0n	10m			200m				200m	1.0	.10u	.10m	150	50	3.2p☑			Si	DO7
70	JAN1N4306	50 $	4 0n☑	10m			10m†				50m	1 0 △	05u	.05m	150	50	2 0p☑	75m	150A	Si	M117*
71	JAN1N4307	50 $	4.0n☑	10m			10m†				50m	1 0 △	.05u	.05m	150	50	2.0p☑	75m	150A	Si	M118*
72	JAN1N4454	50 $	4.0n☑	10m			10m	100			10m	1.0 △	10u	.10m	150A	50	2 0p☑	75m	200S	Si	A1ap
73	JAN1N4532	50 $	4.0n☑	10m			10m	100	△		10m	1.0 △	.10u	.10m	150	50	2.0p☑	75m	150A	Si△	A1k
74#	BAX13	50	4 0n☑	10m	6 0		1 0m	100			2.0m	700m△	25n	10u	150J	10	3 0p☑	75m	200J	Si	A257a
75#	BAX13A	50	4 0n☑	10m	6 0		1 0m	100			2.0m	700m△	25n	10u	150J	10	3.0p☑	75m	200J	Si	DO35
76#	BAX80	50 ☑	4 0n☑	10m	6 0		1.0m☑	100			10m	1 0 △	03u	05m	150A	20	4.0p☑	150m	200J	Sı#	DO35
77#	BAY38	50	4.0n☑	10m	1 0		1 0m	100			50m	1 0	05u			50	2 0p☑	115m	175	Si	DO7
78#	BAY63	50	4 0n	10m			10m				100m	1.0 △	.10u	10m	150	50	4.0p☑	115m	200J	Si#	DO7
79#	BAY71	50 ☑	4 0n☑	10m			10m†	100			20m	1 0	10u	.10m	125	35	2 0p☑	75m	175A	Si#	DO7
80#	BAY74	50 ☑	4.0n☑	200m			200m†				200m	1 0	10u	10m	125	35	3 0p☑	200m	175A	Si$	DO7
81#	BSA31	50	4 0n☑	10m	5 0		1 0m☑	100			30m	1 0	10u	.10m	150	50	2 0p☑	100m	150A	Si#	A1
82	CA69001	50	4 0n	10m			10m†				1 0m☑		10u			25	4 0p		200A	Si	Z11*
83	CA69002	50	4.0n	10m			10m†				1.0m☑		10u			25	4.0p		200A	Si	Z11*
84	CA69003	50	4 0n	10m			10m†				10m☑		.10u			25	4 0p		200A	Si	Z11*
85	CA69004	50	4.0n	10m			10m†				10m☑		10u			25	4.0p		200A	Sı	Z11*
86	FD100	50 $	4 0n	10m			10m†	100			10m	1.0	10u	10m	150	50	2.0p☑	75m	175A	Si#	DO7
87	GP350	50	4 0n☑	10m	6 0		1.0m☑	100			300m	1.0 △	05u	05m	150	20	3.0p☑	250m	175	Si#	DO35
88#	HDS9009	50	4 0n☑	10m			10m				20m	1.0 △	10u	.10m	150A	40	2 0p☑	75m	175A	Sı#$	A1y
89	HMG3600	50 ☑	4 0n	200m			200m†				200m☑	1 0	10u	10m	150	50	2.5p			Si	M208b
90	HMG3873	50 ☑	4 0n	10m	10		1 0m☑				20m☑	85	10u	04m	150	50	4 0p			Sı	M208b
91	HMG3954	50 ☑	4 0n	200m			200m†				200m	1.0	10u	10m	150	50	3 2p			Sı	M208b
92	HMG4150	50 ☑	4 0n	200m			200m†				200m☑	1 0	10u	10m	150	50	2 5p			Sı	M208b
93	HMG4322	50 ☑	4 0n	200m			200m†				200m☑	1.0	10u	10m	150	50	1 5p			Si	M208b
94#	HS9009	50	4 0n☑	10m			10m				20m	1 0 △	10u	10m	150A	40	2 0p☑	75m	175A	Sı#$	DO7
95#	ITT44	50	4 0n	10m	6 0		1 0m	100			10m	1 0 △	100n	100u	150	45	4.0p☑	75m	200J	#$	A1sy
96	MA4303	50 ☑	4 0n☑	10m	5 0		1 0m☑	100			10m	1 0	03u	03m	150	40	1 5p§☑	50m	200A	Si△	A2b
97	MA4304	50 ☑	4.0n☑	10m	5 0		1 0m☑	100			10m	1 0	.03u	03m	150	40	1.5p§☑	50m	200A	Sı△	A2b
98	MA4305	50 ☑	4.0n☑	10m	5 0		1.0m☑	100			10m	1 0	03u	03m	150	20	1 5p§☑	50m	200A	Sı△	A2b
99	MA4306	50 ☑	4.0n☑	10m	5 0		1.0m☑	100			10m	1 0	25n	25u	150	20	1.5p§☑	50m	200A	Sı	A2b
100	MC58	50	4 0n	10m	6.0		1 0m	100			150m	1 0	50n	25u	100	20	4.0p☑			Sı	M409
101	MC103☑	50	4 0n	10m	6 0		1.0m				10m	1.0	20u			35				Si	A1ce
102	MC903	50	4 0n	10m	5 0		1 0m	100			10m	1 0	10u	01m	100	40	1 0p☑		175A		A2c
103	MC903A	50	4.0n	10m	5 0		1 0m	100			20m	1 0	.10u	01m	100	40	1 0p☑		175A		A2c
104	MC908	50	4 0n	10m	5 0		1 0m	100			10m	1 0	10u	01m	100	40	2.5p☑		175A		A2c
105	MC908A	50	4 0n	10m	5 0		1 0m	100			20m	1.0	10u	01m	100	40	2.5p☑		175A		A2c
106	MHD616	50	4 0n☑	10m			10m†				10m	85	.10u	10m	150	50	2.0p☑	150m	200	Sı	A1e
107#	MS51	50	4 0n	10m	6 0			100			10m	1 0 △		75u	150A	20	4.0p☑	75m	150A	Sı#	DO7
108	SG5100	50 ☑	4.0n	10m	6 0		1 0m	100			400m	1 0	.25u	10m	150	30	4.0p☑	250m	175A	Sı	DO7

SYMBOLS AND CODES EXPLAINED IN INTERPRETER

4. SWITCHING DIODES

IN ORDER OF (1) PIV, (2) RECOVERY TIME, and (3) TYPE No.

LINE No.	TYPE No [3]	PIV [1] (V)	RECOVERY TIME TEST CONDITIONS [2] Trr (s)	If (A)	Vr (V)	Zr (Ω)	Ir (A)	RL (Ω)	CKT	STORE TIME (s)	MIN. FORWARD CURRENT at 25°C IF (A)	at Vf (V)	MAX. REVERSE CURRENT Ir @25°C & Vr (A)	Ir at T & Vr (A)	TEMP T (°C)	TEST VOLT Vr (V)	CAP. at ZERO VOLTS (F)	ABSOLUTE MAX RATING AVG. FWD I (A)	MAX. TEMP (°C)	MAT.	DESCRIPTION DWG. No.
1	SG5250	50 ⊘	4 0n⊘	10m	6.0		3 0m⊘	100			100m	90	25n	100u	150	20	6 0p⊘	200m	175A	Si$#	DO7
2	TMD50	50	4 0n	10m	6 0		3 0m⊘	75			10m	1 0	.50u			50	4 0p	20m	150S	Si△	A2
3	USA55191/1	50 ⊘	4 0n⊘	10m	6 0				*		10m	1 0		.03m	150	20	5 0p⊘	50m	150	Si	M273
4	1N3602	50	5 0n	10m			10m				20m	1 0	10u	10m	150	50	3 0p⊘			Si	DO7
5	FD111	50 $	5.0n	10m			10m	100			1 0m	76	10u	6u	100	55	2.5p⊘	75m	175A	Si	DO7
6	HMG3603	50 ⊘	5.0n	10m	10		1.0m⊘				30m	1 0	10u	10m	150	35	3.0p			Si	M208b
7	MCPD526A	50	5 0n	10m			200u				150m	1 0	100n	25u	100	20	4 0p⊘		150A	Si	M411
8	MCPD526B	50	5 0n	10m			200u				150m	1 0	100n	25u	100	20	4 0p⊘		150A	Si	M411a
9	MCPD526C	50	5.0n	10m			200u				150m	1 0	100n	25u	100	20	4 0p⊘		150A	Si	M277d
10	MT700	50	5 0n	10m	6 0		1.0m	100			50m	1.0	100n	25u	100	20	5 0p	200m	175A	Si	A60e
11	MT702	50	5.0n	10m	6 0		1 0m	100			100m	1 0	100n	25u	100	20	5 0p	200m	175A	Si	A60e
12	MT703	50	5 0n	10m			10m	100			30m	1 0	100n	50u	100	20	3.5p	200m	175A	Si	A60e
13	Q50-200	50	5 0n	10m			1 0m				50m	1.0							75A		DO7
14	Q50-200A	50	5.0n	10m			1 0m				10m	.80							75A		DO7
15	Q50-300	50	5 0n	10m			1 0m				10m	1 0							75A		DO7
16	Q50-300A	50	5 0n	10m			1 0m				20m	1 0							75A		DO7
17	Q50-300B	50	5.0n	10m			1 0m				30m	1 0							75A		DO7
18	Q50-500	50	5.0n	10m	6 0	3 0K		120			50m	1 0	600u			50			75A	Ge*	DO7
19	Q50-500A	50	5.0n	10m	6 0	3 0K		120			10m	.60	600u			50			75A	Ge*	DO7
20♦	JAN1N3600	50 †	6 0n⊘	200m			200m	100			1 0m	620m△	100n	100u	150A	50	2.5p⊘	200m	175A	Si	A1da
21	1N4150	50	6 0n⊘	200m			200m				1 0m	620m△	100n	100u	150A	50	2.5p⊘		200S	Si	DO35
22♦	JAN1N4150	50 †	6 0n⊘	200m			200m	100	△		1 0m	620m△	100n	100u	150A	50	2 5p⊘	200m	175A	Si	A1ap
23	1N4322	50	6 0n⊘	10m			1 0m†				200m⊘	1 0	10u	10m	150	50	1 5p⊘		150A	Si	DO7
24#	BAW54	50 ⊘	6.0n⊘	20			20	100			10	1.0 △	100n	100u	125	30	4.0p⊘	.19	150J	Si†$	DO7
25#	BAW56	50	6.0n	10m	1 0		1 0m	100			50m	1.1 △	30n	10u	125J	25	2 0p		125J	Si$#	M500
26▼#	BAX82	50	6 0n⊘	10m			10m	100			200m	1 3 △	100n	100u	150A	30	3 5p⊘		200S	Si	DO35
27#	BAX84	50	6.0n⊘	10m			10m	2 0			20m	1 0	10n			20	2.0p*⊘	75m	175A	Si	A60h
28	MC57	50	6 0n	10m	6 0		1 0m	100			400m	1 0	50n	25u	100	20	6.0p⊘			Si	M409
29	MT707	50	6 0n	10m			10m	100			200m	1.2	100n	25u	100	30	6.0p	200m	175A	Si	A60e
30	PD401	50	6.0n	10m	6 0	6 0K					100m	1 0	05u	10m	100A	20				Si	A2
31	PD402	50	6 0n	10m	6 0	6 0K					50m	1 0	05u	05m	150A	50	1 0p			Si#	M18*
32	SG9600	50	6 0n⊘	200m			200m	100			200m	1 0 △	1.0u	100u	150	50	2 5p⊘	200m	175S	Si△#	A1j
33#	TF5	50	6.0n⊘	10m			10m†		*		20m	1 0	01u			20	2.0p*⊘	75m	175A	Si	A60h
34	WG142	50	6 0n	10m	6 0		1 0m	100			250m	1 0 △		.10u	25	30	4 0p			Si#	A1z
35▼#	BAV24	50	8.0n⊘	500m	50			100			500m	1 2 △	100n	100u	125A	40	3 0p⊘		200S	Si	DO35
36#	BAX86A/TF53	50	8 0n⊘	10m			10m				10m	1 0	.10u	01m	100	20	4.0p⊘	75m	175	Si	DO35
37	MC7008-1	50	8.0n	30m			30m	150			400m	1 2 △	100n	100u	150	30	4 0p		200S	Si	A2g
38	MC7008-2	50	8.0n	30m			30m	150			400m	1 2 △	100n	100u	150	30	4.0p		200S	Si	A1p
39	MC7009-1	50	8.0n	30m			30m	150			400m	1 2 △	100n	100u	150	30	3 0p		200S	Si	A2g
40	MC7009-2	50	8.0n	30m			30m	150			400m	1 2 △	100n	100u	150	30	3.0p		200S	Si	A1p
41	MCPD525A	50	8.0n	10m			200u				400m	1 0	100n	25u	100	20	6 0p⊘		150A	Si	M411
42	MCPD525B	50	8 0n	10m			200u				400m	1 0	100n	25u	100	20	6 0p⊘		150A	Si	M411a
43	MCPD525C	50	8 0n	10m			200u				400m	1 0	100n	25u	100	20	6.0p⊘		150A	Si	M277d
44	1N5C14	50	9.0n⊘	500m	50		50m	3 0			1 0	450m	10u			25	20p⊘	400m	175	Si	M214a
45	1N5C15	50	9.0n⊘	500m	50		50m	3.0			1 0	450m	10u			25	20p⊘	500m	175	Si	M214a
46	1N5C16	50	9 0n⊘	500m	50		50m	3 0			1 0	450m	10u			25	20p⊘	600m	175	Si	M214a
47	1N5C24	50	9.0n⊘	500m	50		50m	3 0			1 0	450m	20u			25	20p⊘	400m	175	Si	M214a
48	1N5C25	50	9.0n⊘	500m	50		50m	3 0			1 0	450m	20u			25	20p⊘	500m	175	Si	M214a
49	1N5C26	50	9 0n⊘	500m	50		50m	3 0			1 0	450m	20u			25	20p⊘	600m	175	Si	M214a
50	1N5C054	50	9.0n⊘	500m	50		50m	3 0			1 0	450m	5 0u			25	20p⊘	400m	175	Si	M214a
51	1N5C055	50	9 0n⊘	500m	50		50m	3 0			1 0	450m	5 0u			25	20p⊘	500m	175	Si	M214a
52	1N5C056	50	9.0n⊘	500m	50		50m	3 0			1 0	450m	5 0u			25	20p⊘	600n	175	Si	M214a
53	1N915	50	10n	10m			10m				50m	1.0	25n	5 0u	100	10	4 0p⊘	75m	150A	Si	A1dh
54	1N3722	50	10n⊘	10m			10m†	100			20m	1.0	10u	05m	150	20	4 0p⊘		150	Si§	A2c
55#	1S960	50	10n	100m			100m	100			50m	1 0	100n	100u	150		4 0p⊘	150m	150	Si	DO7
56▼#	BAV13	50	10n⊘	10m			10m	100			400m	1.3 △	100n	150u	150A	35	3 5p⊘		200S	Si	DO35
57#	BAX86B/TF54	50	10n⊘	10m			10m				10m	1.0	10u	01m	100	20	5 0p⊘	75m	175	Si	DO35
58#	BAX92TF7	50	10n⊘	10m			10m†		*		50m	1 0	10n	5.0u	100	20		75m	175A	Si	A60h
59	HMG3722	50 ⊘	10n	10m	10		1 0m⊘				20m	1 0	10u	05m	150	20	4.0p			Si	M208b
60	MC7002-1	50	10n	30m			30m	150			400m	1.0 △	50n	50u	150	30	8.0p		200S	Si	A2g
61	MC7002-2	50	10n	30m			30m	150			400m	1 0 △	50n	50u	150	30	8 0p		200S	Si	A1p
62	MC7003-1	50	10n	30m			30m	150			400m	1 0 △	50n	50u	150	30	6 0p		200S	Si	A2g
63	MC7003-2	50	10n	30m			30m	150			400m	1 0 △	50n	50u	150	30	6 0p		200S	Si	A1p
64	MC7005-1	50	10n	30m			30m	150			400m	1 2 △	50n	50u	150	30	8 0p		200S	Si	A2g
65	MC7005-2	50	10n	30m			30m	150			400m	1 2 △	50n	50u	150	30	8.0p		200S	Si	A1p
66	MC7006-1	50	10n	30m			30m	150			400m	1 2 △	50n	50u	150	30	6 0p		200S	Si	A2g
67	MC7006-2	50	10n	30m			30m	150			400m	1 2 △	50n	50u	150	30	6 0p		200S	Si	A1p
68	MC7007-1	50	10n	30m			30m	150			400m	1 2 △	50n	50u	150	30	4 0p		200S	Si	A2g
69	MC7007-2	50	10n	30m			30m	150			400m	1 2 △	50n	50u	150	30	4 0p		200S	Si	A1p
70	MSD6101	50	10n⊘	10m	5		10m				10m	50	10u	10m	125A	40	2p⊘		135J	Si	TO92*
71	NPC185	50	10n	200m			200m†	100			500m⊘	1 5	10u	10m	150S	30	2 5p⊘	200m	175S	Si	DO7
72#	SFD185	50	10n	200			200	100			100m	1 0	100n				2 5p⊘	200m	175S	Si#	DO7
73#	TF7	50	10n⊘	10m			10m†		*		50m	1 0	10n	5 0u	100	20		75m	175A	Si	A60h
74	MC7001-1	50	12n	30m			30m	150			400m	1.0 △	50n	50u	150	30	8 0p		200S	Si	A2g
75	MC7001-2	50	12n	30m			30m	150			400m	1.0 △	50n	50u	150	30	8 0p		200S	Si	A1p
76	MC7004-1	50	12n	30m			30m	150			400m	1.2 △	50n	50u	150	30	8 0p		200S	Si	A2g
77	MC7004-2	50	12n	30m			30m	150			400m	1 2 △	50n	50u	150	30	8 0p		200S	Si	A1p
78	Q50-750	50	12n	1 6m	3 0						50m	1 0	100u			50			75A	Ge⊘	DO7
79#	BAX85	50	15n⊘	10m			10m†		*		20m	1 0	10n	3.0u	100	20	3.0p*⊘	75m	175A	Si	A60h
80	MMD70	50	15n⊘	10m	15		10m				100m	1 2 △	100n			30	2 5p⊘	200m	135J	Si$	A265
81	MT709	50	15n	10m			10m	100			300m	1 2	100n	25u	100	30	8.0p	200m	175A	Si	A60e
82	Q50-950	50	15n	1 6m	3 0						50m	1 0	100u			50			75A	Ge⊘	DO7
83	S401	50	15n⊘	400m	30	10K		100			400m	1 0	10u			30	7 0p†		175A	Si△	DO7
84#	TF51	50	15n⊘	10m			10m†		*		20m	1 0	10n	3 0u	100	20	3 0p*⊘	75m	175A	Si	A60h
85▼	DSR1081	50	20n⊘	1 0			1 0				500m	1 1 △	1.0u	75u	100	50		750m			A266
86	DSR3050	50	20n	1 0							3 0	1 1 △	3 0u					3 0			A266
87	DSR5050	50	20n	1 0							4.0	1 0 △	5 0u					5 0			A146n
88	DSR6050	50	20n	1 0							6 0	1 0 △	10u					10			S292
89#	MM1	50	20n	10m			10m				50m	1 0 △	100n	50u	100A	50	35p⊘	50m	150A	Si△	DO7
90	DSR2050	50	30n	1 0							3 0	1.2 △	10u					3 0			A266
91	S403	50	30n⊘	400m	30	10K		100			400m	1 0	10u			30	7 0p†		175A	Si△	DO7
92#	BAW48	50 ⊘	35n	30m			30m	100			50m	1 0 △	200n	200u	125	30	5.0p⊘	19	150J	Si†	DO7
93	1N3598	50	40n	100m	1 1						10m	85	10u	10m	150	50	2.0p⊘			Si	DO7
94#	ZS41	50	40n$⊘	10m	5 5						10m	1 5 △	500n	25u	100A	50	2 5p⊘†			Si#	C1aa
95#	ZS41F	50	40n$⊘	10m	5 5						10m	1 5 △	500n	25u	100A	50	2.5p⊘†			Si#	C29e
96	1N810	50 ⊘	50n⊘	10m			10m†				10m	1 0	1.0u			40	7 0p⊘		150A	Si△	A182
97	AM7270A	50	50n⊘	30m			1 0m△				100m⊘	1 0	10u	10m	150	40	4.0p⊘	150m	125A	Si	M117*
98	AM7275A	50	50n⊘	30m			1 0m△				100m⊘	1 0	10u	10m	150	40	4 0p⊘	150m	125A	Si	M118*
99	AM7280A	50	50n⊘	30m			1 0m△				50m⊘	1 0	10u	10m	150	40	2.0p⊘	100m	125A	Si	M117*
100	AM7285A	50	50n⊘	30m			1 0m△				50m⊘	1 0	10u	.10m	150	40	2 0p⊘	100m	125A	Si	M118*
101#	BAX90B/TF828	50	50n⊘	30m			30m				50m	1 0	10u	10m	125	50	6 0p⊘	75m	175	Si	DO35
102#	BAX94	50	50n⊘	10m			10m†		*		75m	1.0	10u			20		75m	175A	Si	A60h
103▼	DSR1084	50	50n⊘	1 0			1 0				100m	1 0 △	500n	25u	100	50		750m			A266
104▼	DSR3051	50	50n⊘	1 0			1 0				2 0	1.1 △	2 0u	50u	100	50		2.0			A266
105▼	DSR5051	50	50n⊘	1 0			1 0				4 0	1 1 △	5 0u	100u	100	50		4 0			A196f
106	MT711	50	50n	10m			10m	100			1 0	1 4	100n	25u	100	30	30p	200m	175A	Si	A60e
107#	TF75	50	50n⊘	10m			10m†		*		75m	1.0	100n			20		75m	175A	Si	A60h
108#	ZS131	50	50n	600m			600m	100			600m	1 7	2 0u	25u	100A	50	15p*⊘	250m	175A	Si*	DO7
109	PD2726A	50	70n	1 0	30		1 0				10	1 0 △	10u	15m	150A	50		15	175A	Si	DO4

SYMBOLS AND CODES EXPLAINED IN INTERPRETER

4. SWITCHING DIODES

IN ORDER OF (1) PIV, (2) RECOVERY TIME, and (3) TYPE No.

LINE No	TYPE No [3]	PIV [1] (V)	RECOVERY TIME TEST CONDITIONS [2] Trr (s)	If (A)	Vr (V)	Zr (Ω)	Ir (A)	RL (Ω)	CKT	STORE TIME (s)	MIN. FORWARD CURRENT at 25°C IF (A)	at Vf (V)	MAX. REVERSE CURRENT Ir @25°C & Vr (A)	Ir at T & Vr (A)	TEMP T (°C)	TEST VOLT Vr (V)	CAP. at ZERO VOLTS (F)	ABSOLUTE MAX RATING AVG. FWD I (A)	MAX. TEMP (°C)	DESCRIPTION MAT.	DWG. No.
1	PD9050A	50	70n	1.0	30		1 0				10	1 0 △	10u	10m	150A	50		15	175A	Si	M574
2	UTR512	50	70n⧄	10m			10m				100m	1 1	75n	30u	100	50		400m	175A	Si	A146g
3▼	DSR5052	50	75n⧄	1 0			1 0				3.0	1.1 △	5.0u	100u	100	50		4 0			A196f
4	UTX105	50	75n⧄	10m			10m⧄				1	1 0	3 0u	05m	100A	50		1	175A	Si	A146f
5	UTX205	50	75n⧄	10m			10m⧄				2	1 0	3.0u	.05m	100A	50		2	175A	Si	A146f
6	HFR5	50	80n⧄	1			1				1	1.2	1 3u	20m	100A	50	100p	1	175A	Si	A196a
7	1N194	50	100n	30m	35	120K					1.5m	2 0	60u	.60m	150	40				Si	DO7
8	1N195	50	100n	30m	35	120K					2.0m	2 0	80u	70m	150	40				Si	DO7
9	1N196	50	100n	30m	35	350K					1.0m	2.0	40u	.50m	150	50				Si	DO7
10♦	A28F	50 †	100n†	5 0			4 0				12	700m⧄△		8.0m	135C	100		12	175J	Si△	DO4⧄
11	AM634	50	100n⧄	40m			40m†				300m	1.0	10u	10m	150A	40	2 0p⧄		175A	Si△	DO7
12	AM636	50	100n⧄	40m			40m†				300m	1 0	10u	10m	150A	40	4.0p⧄		175A	Si△	DO7
13	AM636A	50	100n⧄	40m			40m†				300m	1.0	10u	10m	150A	40	2.0p⧄		175A	Si△	DO7
14	AM637	50	100n⧄	40m			40m†				200m	1.0	10u	10m	150A	40	4.0p⧄		175A	Si△	DO7
15	AM637A	50	100n⧄	40m			40m†				200m	1 0	.10u	10m	150A	40	2.0p⧄		175A	Si△	DO7
16	AM638	50	100n⧄	40m			40m†				100m	1 0	10u	.10m	150A	40	4.0p⧄		175A	Si△	DO7
17	AM638A	50	100n⧄	40m			40m†				100m	1 0	10u	10m	150A	40	2.0p⧄		175A	Si△	DO7
18	AM639	50	100n⧄	40m			40m†				50m	1 0	10u	.10m	150A	40	4.0p⧄		175A	Si△	DO7
19	AM639A	50	100n⧄	40m			40m†				50m	1 0	10u	10m	150A	40	2.0p⧄		175A	Si△	DO7
20#	BYX61-50	50	100n	1.0	30			1 0			12	1 4 △	25u	3 0m	100C	50		12	150J	Si△	DO4
21#	BYX65-50	50	100n	1 0	30			1.0			30	1 5 △	80u	10m	100C	50		30	150J	Si△	DO5
22▼	DSR1062	50	100n⧄	1 0			1.0				500m	1 1 △	1.0u	50u	100	50		2.0			A266
23▼	DSR6051	50	100n⧄	1 0			1 0				6.0	1.2 △	10u	250u	100	50		10			S292a
24#	MC2⧄	50	100n	10m			10m				50m	1.5	1 0u		25	50	5.0p△	50m	100	Si	A247
25	UTX3105	50	100n⧄	1 0			1 0				2.0	1 0	5.0u	75u	100	50		3 0m	175	Si	
26	UTX4105	50	100n⧄	1 0			1 0				3 0	1.0	5 0u	75u	100	50		4 0m	175	Si	
27#	HD1810	50	110n	10m	6 0	25k			△		100m	.75	5.0u	25u	55	10	1.0p*			Ge⧄	DO7
28	388A	50	120n								1 0	1 1 △		1.0m	125	50		1.0 §	150	Si	DO15
29	PS7269	50	130n	5 0m	40	100K		2k	△		5.0m	1 0	5.0u	03m	100	50	4.0p⧄	120m	200S	Si△	DO14
30	A114F	50	140n								1.0	1 1 △	5.0u	500u	125J	50			125J	Si	A94g
31	1N5415	50	150n⧄	500m			1 0							2.0m	175A	50	200p⧄		175A	Si	A248
32	JAN1N5415	50	150n	500m			1 0		△		3.0	1 3 △	1.0u	20u	100A	50	550p⧄	2.0 §	200A	Si	A248a
33	RAB005	50	150n	500m			1 0				3 0	1 3	15u	300u	100	50		3.0 §	150A	Si	A1ez
34	RIB005	50	150n⧄	50			1 0				3 0	1 3 △	15u	500u	100A	50		3 0	175J	Si	A1eu
35	RL005	50	150n	500m							1	1.3 △	2 0u	10m	100	50		1	150A	Si	A3c
36	SCBR05F	50	150n	500m			1		△		1.0	1 3 △	20u△	06m△	125A	50		1 5	150A	Si	
37#	ZS130	50	150n	600m			600m	100			600m	1 7	2 0u	25u	100A	50	15 *⧄	250m	175A	Si*	DO7
38	1N4718	50 ⧄	180n⧄	750m	15		1.0m	10k			.75m	1 2	50u			50	8.0p†⧄		175S	Si	DO7
39	1N3874	50 †	200n†	1	30		2				6	1 4		1.0m	100C	50		6	100C	Si	DO10
40	1N3879	50 †	200n†	1	30		2				6	1 4	15u	3.0m	100C	50		6	150C	Si△	DO4
41	1N3879R	50	200n⧄	5 0	50		5 0				6.0	1 4 △	15u	1.0m	100C	50		6 0	150J	Si	DO4
42	1N3884	50	200n⧄	1	30						12	1.4		3.0m	100	50			175S	Si	DO10
43	1N3889	50	200n†⧄	1 0	30						12	1 4	25u	3.0m	100C	50		12	150C	Si	DO4⧄
44	1N3899	50 †	200n†	1	30		3						50u	6.0m	100C	50		20m	150C	Si△	DO5
45	1N3904	50	200n⧄	1	30						20	1 4		6 0m	100	50			175S	Si△	DO11
46	1N3909	50 †	200n†	1	30		3						80u	10m	100C	50		30m	150C	Si△	DO5
47	JAN1N3909,R	50	200n⧄	1 0	30						95	1.4 △	80u	10m	100C	50		30 §	150A	Si	DO5
48	1N3914	50 †	200n⧄	1	30						30	1.4		10m	100	50			175S	Si	DO11
49	1N4933	50	200n⧄	1	30				△		1	1 2	5.0u	10m	100	50		1	150	Si	A1az
50#	CG82H	50	200n	10m	10	1 0K					100m	1 1		25m	60	50	3.0p⧄			Ge⧄	A1bj
51#	GR05	50	200n⧄	1 0	30						4.0	1 4 △⧄	15u	200u				4.0	125C	Si△	DO4
52	MR830	50	200n⧄	1							3	1.1 △	50u	2.5m	100	50		3	150J	Si	A179a
53	PBR05	50	200n⧄	50			1.0				3 0	1 2 △	25u					15	125C	Si	*
54	SCSDF05L	50	200n	500m			1 0				50	1.2 △	13u	500u	100A	50		50	150A	Si	M493
55	SCSDF05W	50	200n	500m			1.0				50	1.2 △	13u	500u	100A	50		50	150A	Si	M492
56	SCSF05	50	200n	500m			1 0				100	1 2 △	25u	1.0m	100A	50		100	150A	Si	S305⧄
57	SCSNF05L	50	200n	500m			1 0				50	1 2 △	13u	500u	100A	50		50	150A	Si	M493
58	SCSNF05W	50	200n	500m			1 0				50	1 2 △	13u	500u	100A	50		50	150A	Si	M492
59	SCSPF05L	50	200n	500m			1 0				50	1 2 △	13u	500u	100A	50		50	150A	Si	M493
60	SCSPF05W	50	200n	500m			1 0				50	1.2 △	13u	500u	100A	50		50	150A	Si	M492
61	TFR105	50	200n⧄	1 0m					†		1 0	1.2 △		1.0m⧄	150	50		1 0m	175C	Si	Z34
62	TFR305	50	200n⧄	1 0m					†		3.0	1.2 △		2 0m⧄	150	50		3 0m	175C	Si	Z34
63	TFR605	50	200n⧄	1.0m					†		6.0	1.2 △		3.0m⧄	150	50		6 0	175	Si	Z34
64	TFR1205	50	200n⧄	1 0m					†		12	1 2 △		4.0m⧄	150	50		12	175C	Si	Z34
65	1N814M	50	250n	5.0m	10	20K					2.0m	1 0		01m	125	20				Si	A2a
66▼	1N5185A	50	250n⧄	1 0			1 0				4 0	1.1 △	2.0u	80u	100	50	400p	4 0	175A	Si	A146p
67#	85P1	50	250n⧄	10m			1 0m				200m	1.0 △		25m	55	30		200m	85S	Ge	DO7
68	CB5F	50	250n	500m			1 0				750m	1.3 △	5.0u	150u	100	50		750m§	150A	Si	A1bg
69#	FR501	50	250n⧄	100m			100m				1 0	1 3 △		200u	100A	50		1 0	150A	Si△	DO13
70	SLA5197HF	50	250n⧄	500m			1 0				3.0	1.0 △	5 0u	100u	100	50		3.0 §	175A	Si△	A31n
71	UTR01	50	250n⧄	10m			10m⧄				500m	1.1	3 0u	10m	100A	50	150p⧄	1	175A	Si	A146f
72	UTR02	50	250n⧄	10m			10m⧄				1	1.1	3.0u	10m	100A	50	150p⧄	2	175A	Si	A146f
73	UTR2305	50	250n	1			1 ⧄				2	1 1	5 0u	.10m	150	50	600p	2	175	Si	A146m
74#	ZS150	50	250n	600m			100m						1 0n	1.0m	150	50	2.5p*	250m	200A	Si#$	DO7
75#	ZS152	50	250n	600m			100m						5 0n	5.0m	150	50	2.5p*	250m	200A	Si#$	DO7
76#	ZS154	50	250n	600m			100m						.10u	10m	150	50	2.5p*	250m	200A	Si#$	DO7
77	1N659	50	300n⧄	30m	35	400k							5 0u	25u	100	50	2 7p†	100m	150A	Si△	A1
78	1N659A	50	300n⧄	30m	35	400K		2k	△		10m	1 0	03u	.05m	150	50	2.0p†	100m	150A	Si⧄	DO7
79	1N840M	50	300n⧄	30m	35	400k					150m	1 0	100n	15u	100	40				Si	A2a
80#	2705	50	300n⧄	20m			2.0m			⧄	8 0m	1.8	100u				80p	2.5	150J	Si	S87e
81▼#	BA175	50 †	300n⧄	10m	6.0	100	1 0m				100m	1.0 △	100n	100u	125	50	8 0p⧄	200m	125J	Si$	M597
82	HMG840	50 ⧄	300n	30m	35	400k			△		150m	1 0	100n	15u	100	40				Si	M208b
83	HMG898	50 ⧄	300n	5 0m	40	100K			△		100m	1 0	5.0u	.02m	100	40				Si	M208b
84	MC840	50	300n	30m	35	400k					150m	1 0	100n	15u	100	40			175A		A2c
85	PD021	50	300n	5 0m	40	100k					20m	1 0	500n	25u	100	10	2.0p†		150A		A2c
86	PD124	50 ⧄	300n	30m	35			2.0k	△		6.0m	1.0	5.0u	25u	100	50	2.0p†	30m	150A	Si	A2
87	PM021	50	300n	5 0m	40	100k					20m	1.0	500n	25u	100	10	2 0p		150A		M163
88	PS701	50	300n	5 0m	40	50k		1 5k			50m	1.0	5.0u	50u	100	45		60m	150A	Si△	DO14
89	RS05	50	300n	1	30		3				6	1.4 △	15u	3.0m	100C	50		6	150C	Si	DO4
90	RT05	50	300n	1	30		1 4m				12	1.4 △	25u	5.0m	100C	50		12	150C	Si	DO4
91	RTC05	50	300n⧄	1 0	30		2.0				20	1 2 △	25u					40	175C	Si	M446*⧄
92	TMD24	50	300n⧄	5.0m	40		.10m⧄				20m	85	50u	.03m	100	50	4 0p†	50m	150A	Si△	A2
93	UTR4405	50	300n⧄	1			1		△		4.0m	1 1	10u	.30m	100	50		6.0m	175A	Si	S277⧄
94	UTR5405	50	300n⧄	1			1		△		5.0m	1.1	10u	.30m	100	50		7 5m	175A	Si	S277⧄
95	UTR6405	50	300n⧄	1			1		△		6 0m	1 1	10u	30m	100	50		9 0m	175A	Si	S277⧄
96#	AAZ17	50	350n⧄	10m	1 0			100			10m	.45 △	150u	30m	60	50	2.0p⧄		85J	Ge⧄	DO7
97	1N3121	50	500n⧄	30m	35	600K					150m	1 1	150u			50	4.0p⧄	110m	60A	Ge	A1
98#	26P1	50	500n	30m	35		75m				20m	2 0 △	50u			50				Ge⧄	DO7
99	HMG626A	50 ⧄	500n	30m	35	400K			△		10m	1.5	10u	.03m	150	35				Si	M208b
100#	RPX50	50	500n⧄	1 0	30						1 0	1.5 △	3.0u					1.0	150A		A31a
101#	DK13	50	700n#⧄	10m	10				⧄		100m	1.0	55u			50	.50p*⧄	120m	75S	Ge⧄	DO7
102	AM302	50	750n⧄	5 0m	40	100k			△		200m	1.0	3.0n	3.0u	150A	40	6 0p⧄			Si△	DO7
103	AM305	50	750n⧄	5 0m	40	100k			△		100m	1.0	3 0n	3.0u	150A	40	6 0p⧄			Si△	DO7
104	AM308	50	750n⧄	5.0m	40	100k			△		50m	1 0	3.0n	3.0u	150A	40	6.0p⧄			Si△	DO7
105	1N626	50 ⧄	1 0u	30m	35	400K			⧄		4.0m	1 5	1.0u	.03m	100	20		20m	150A	Si	A1bz
106	1N626M	50	1 0u	30m	35	400K					4 0m	1.5	1.0u	.03m	100	35				Si	A2a
107	CGD301	50 †	1 0u	25m	15		15m	2k	△		40m	1.0	25u	100m	75	20		45m	90A	Ge	A1bz
108	HMG626	50 ⧄	1 0u	30m	35	400K			△		4 0m	1.5	1 0u	.03m	100	35				Si	M208b
109	HMG897	50 ⧄	1.0u	5 0m	40	100K			△		5 0m	1.0	.10u	.02m	100	40				Si	M208b
110#	MR05	50	1 0u	100m			100m				30m	1.0 △	2 0u				35p⧄	30m	125A	Si△	DO7

SYMBOLS AND CODES EXPLAINED IN INTERPRETER

4. SWITCHING DIODES

IN ORDER OF (1) PIV, (2) RECOVERY TIME, and (3) TYPE No.

LINE No	3 TYPE No.	1 PIV (V)	2 RECOVERY TIME Trr (s)	TEST CONDITIONS If (A)	Vr (V)	Zr (Ω)	Ir (A)	RL (Ω)	CKT	STORE TIME (s)	MIN. FORWARD CURRENT at 25°C IF (A)	at Vf (V)	MAX. REVERSE CURRENT Ir @25°C & Vr (A)	Ir at T & Vr (A)	TEMP T (°C)	TEST VOLT Vr (V)	CAP. at ZERO VOLTS (F)	ABSOLUTE MAX RATING AVG. FWD I (A)	MAX. TEMP (°C)	MAT.	DESCRIPTION DWG No
1	PD1	50	1 0u	5 0m	40	100k					5 0m	1 0	1 0u	25u	100	10	2 0pt		150A		A2c
2	PM1	50	1 0u	5 0m	40	100k					5 0m	1 0	1 0u	25u	100	10	2 0p		150A		M163
3	SCBR05M	50	1.0u	500m			1		△		1.0	1 3 △	20u△	.06m△	125A	50		1 5	150A	Si	
4▼	G1A	50	2 0u	500m			1 0				1 0	1 0 △	2 0u	100u	100J	50	14p	1 0 §	175A		A94j
5▼	G2A	50	2 0u	500m			1 0				2 0	1 2 △	500n	10u	100J	50	14p	2.0 §	175A		A94j
6#	2304	50	2 5u⌀⌀	30m	35	3 5K			⌀		10m	1 0	5 0u			30			150J	Si*	A134
7#	2405	50 #	2 5u⌀⌀	30m	5 0	50K			⌀		100m	1 5	5 0u			50			150J	Si*	A134
8	A15F	50	2 5u								3 0	1 0 △	5 0u	300u	175J	50		3 0	70A	Si	A249
9▼	G3A	50	3 0u	500m			1 0				3 0	1 0 △	2.0u	100u	100J	50	3 0p	3 0 §	175A		A94m
10#	1SB05	50	5 0u								1.0	2 5 △		500u	100J	50		1 0 §	150S		M562
11#	MSR5	50	20u	20m			1 0m		⌀		1.0	1 2 △		5 0u		50	30p	1 5 §	150A	Si	DO27
12#	PL4001	50 †	20u	20m			1 0m		⌀		1 0	1 2 △	5 0u			50	30p	1 5 §	150A	Si△	DO27
13#	1S1213	50	250 ⌀	2 0m			200u		⌀		100m	1 0	200u			30	1 0 §	60m	90A	Ge⌀	A1bw
14#	1S1214	50	250 ⌀	2 0m			200u		⌀		100m	1 0	200u			40	1 0 §	60m	90A	Ge⌀	A1bw
15	1N3125	55	1 0p	5 0m	20				†		5 0m	40		125u	71	20			90S	Ge	DO7
16#	1S1586	55	2 0n⌀	10m	6 0			50			100m	1 0	500n			50	2 0p	150m	175J	Si$#	A60g
17#	1S1587	55	2 0n⌀	10m	6 0			50			100m	1 2	500n			50	2 0p	130m	175J	Si$#	A60g
18	1N4382	55	5 5n⌀	10m			10m	100			300m	840m△	100n	100u	150A	55	2.5p⌀		175A	Si	A9e
19#	BAX78	55	20n⌀	400m			4 0m	1k			100m	95 △	10u	10m	150	55	2.0p⌀		190J	Si#$	DO7
20	MB200	55	20n	10m			10m				1 6	1 0	.50u	10m	100	40	25p		175A	Si	A60f
21	MB207	55	20n	10m			10m				1.2	1 0	1 0u	20m	100	40	25p		175A	Si	A60f
22	MB214	55	200n	5 0m	40	100K					1 2	1 3 △	1 0u	10m	100	40	10p	15	75A	Si	A60f
23	MB221	55	200n	5 0m	40	100K					850m	1 3 △	3.0u	50m	100	40	10p	15	75A	Si	A60f
24	MT200	55	200n	5.0m	40	250k		100k			500m	1.0	1 0u	100u	100A	40	6 0p				A60e
25	MT207	55	200n	5 0m	40	250k		100k			250m	1 0	3.0u	500m	100A	40	6.0p				A60e
26#	X6G751	60 ⌀	05n*⌀							100n							2 0p§			Si	F27d
27	PR0113	60 ⌀	.60n*⌀	10m	10			100		100n§			50u			55	8.0p⌀		175A	Si$△	F27d
28	PR0114	60 ⌀	.70n*⌀	10m	10			100		100n§			50u			55	10p⌀		175A	Si$△	F27d
29	1N4316	60 †	2 0n	10m	6 0		1 0m⌀	100			25m	53	10u	10m	150	50	4.0p⌀		200	Si	A94a
30	MC55	60	3 0n	10m	6 0		1 0m	100			200m	1 0	10u	.01m	100	30	6.0p⌀			Si	M409
31	MCPD521A	60	3 0n	10m			200u				200m	1 0	100n	10u	100	30	6 0p⌀		150A	Si	M411
32	MCPD521B	60	3 0n	10m			200u				200m	1 0	100n	10u	100	30	6.0p⌀		150A	Si	M411a
33	MCPD521C	60	3 0n	10m			200u				200m	1 0	100n	10u	100	30	6 0p⌀		150A	Si	M277d
34#	BAW63	60	4 0n⌀	10m	5 0			50			10m	900m	1 0u			60	4 0p*⌀		175J	Si	M470
35	GP360	60	4 0n⌀	10m	6 0		1 0m⌀	100			300m	1 0 △	05u	05m	150	20	3.0p⌀	250m	175	Si#	DO35
36	LDD5	60	4 0n⌀	10m	6 0		1 0m	100			50m	1 0 △	50n			50	3 0p⌀	75m	150J	Si#$	M401
37	LDD10	60	4 0n⌀	10m	6 0		1 0m	100			50m	1 0 △	50n			50	3 0p⌀	75m	150J	Si#$	M401*
38	LDD15	60	4 0n⌀	10m	6 0		1 0m	100			50m	1 0 △	50n			50	3 0p⌀	75m	150J	Si#$	M401*
39	LDD50	60	4 0n⌀	10m	6 0		1 0m	100			50m	1 0 △	100n			50	3 0p⌀	75m	150J	Si#$	M401*
40	MC59	60	4 0n	10m	6 0		1 0m	100			200m	1 0	10u				2 5p⌀			Si	M409
41	MT705	60	4 0n	10m	6 0		1 0m	100			100m	1 0	100n	25u	100	40	3 5p	200m	175A	Si	A60e
42#	CG72H	60	5 0n	10m	10	1 0K					3 0m	1 0	1 0m			60	1 4p⌀			Ge⌀	A1bj
43	PD9047	60 †	5 0n	10m	6 0		10mt		*		70m	1 0	10u	10m	150	50			200	Si	A123
44	Q60-500	60	5 0n	10m	6 0	3 0K		120			50m	1.0	600u			60			75A	Ge*	DO7
45	Q60-500A	60	5 0n	10m	6 0	3 0K		120			10m	.60	600u			60			75A	Ge*	DO7
46#	CG71H	60	5.4n	10m	10	1 0K					3 0m	1 0	1.0m			60	1.4p⌀			Ge⌀	A1bj
47	1N3207	60 §	6 0n⌀	10m	6 0		10mt	100			150m	1 0	05u	01m	100	20	9 0p⌀△		150A	Si	A2
48	JAN1N3207	60	6 0n	10m	6 0		1 0mt	100	△		150m	1 0	05u	60u	150	20	15p⌀	100m	150A	Si	A2p
49	1N3594	60	6.0n	10m	6 0		10mt	100			50m	1 0	10u	10m	150	50	4 0p⌀			Si	A2c
50	1N4375	60 ⌀	6.0n⌀	10m	6 0		1 0m⌀	75			20m	1 0	1 0u			50	2.0p⌀		200S	Si	A9g
51	BAV10	60	6 0n⌀	400m			40m	100			10m	725m	100n	100u	150J	60	2 5p⌀	300m	200J	Si#$	DO35
52♦#	BAW26	60 †	6 0n⌀	100m			100m				200m	1 2 △	100n	50u	100	60	4 0p⌀	150m	200J	Si$	DO35
53♦#	BAW27	60 †	6 0n⌀	100m			100m				400m	1 2 △	100n	50u	100	40	4 0p⌀	150m	200J	Si$	DO35
54	HMG3207	60 ⌀	6 0n	10m	6 0		1 0m⌀				150m	1 0	05u	01m	100	20				Si	M208b
55	HMG3594	60 ⌀	6 0n	10m	10		1 0m⌀				50m	1 0	10u	10m	150	50	4 0p			Si	M208b
56	HMG4375	60 ⌀	6 0n	10m	6 0		1 0m⌀				20m	1 0	.01u			10	2 0p			Si	M208b
57#	1S1303	60	7 0n⌀	10m	1 0		⌀	50			100m	1 0 △	500n			30	4 2p⌀	250m	175S	Si$#	A1bw
58	BAY69	60	10n⌀	10m			10m	100			100m	1 0	10u		25	50	5 0p⌀	115m	175J	Si#	A60h
59	Q60-750	60	12n	1 6m	3 0						50m	1 0	100u			60			75A	Ge⌀	DO7
60	1N3730	60	15n	10m	6 0			75			750m	1 0	10u	01m	100	60	12pt		150A	Si	A1bz
61#	BAY42	60	15n⌀	200m			200mt				200m	1.0 △	05u	03m	100	60	5 0p⌀		175J	Si#	DO7
62	Q60-950	60	15n	1 6m	3.0						50m	1 0	100u			60			75A	Ge⌀	DO7
63	S501	60	15n	500m	30	10K		100			500m	1 0	10u			30	7.0pt		175A	Si△	DO7
64	S505	60	15n	500m	30	10K		100			500m	1 0	10u			30	7 0pt		175A	Si△	DO7
65	S508	60	15n	500m	30	10K		100			500m	1 0	.10u			30	7.0pt		175A	Si△	DO7
66#	SX781	60	25n#	10m	20			1k			10m	1 5	10u	10m	100	60	5 0p⌀	75m	150S	Si*	C6
67	TID17	60 #	25n⌀	200m			200m	100			100m	1 0 △	.10u			30	4.0p⌀	100m	150A	Si$#	TO18*
68	TID19	60 #	25n⌀	200m			200m	100			100m	1 0 △	.10u			30	7 0p⌀	100m	150A	Si$#	TO18*
69	MC1545	60	50n								1 5	1 3 △	30u	04m	100	30	100p		200S	Si	A1r
70	CGD1451	60	80n	10m			3 0m△		*		1 0m	34	6.0u			5.0	40p△		90A	Ge⌀	DO7
71	G820	60	80n	10m			10m		*		50m	70 △		6u	25	5 0	40p△			Ge⌀	DO7
72	1N760	60	100n	26m	26						40m	1 0		20m	75	10				Ge⌀	DO7
73	1N788	60	200n	26m	26						100m	1 0		20m	75	10				Ge⌀	DO7
74	S398	60	200n⌀	500m	30	10K		1k			500m	90	20u			25	7.0pt		175A	Si△	DO7
75	1N794	60	250n⌀	5 0m	40	200K		2k	△		10m	1.0	5 0u	03m	100	50	3.0pt	120m	150A	Si△	A60p
76	1N5185	60	250n⌀	1			1				3	1 1 △	5 0u	10m	100A	50	600p	3	175A	Si	A146e
77#	1S77	60	250n	30m	5 0		30m	2k			25m	1 0	25u		25	10		60m	70	Ge	DO7
78▼	C6251	60	250n⌀	10m			10mt				400m	1 0	1 0u	100u	100	50			175A	Si	M371
79	HMG794	60 ⌀	250n	5 0m	40	200K			△		10m	1 0	5 0u	03m	100	50				Si	M208b
80	MC794	60	250n	5 0m	40	200K					10m	1 0	5.0u	03m	100	50			175A		A2c
81	1N417	60	300n⌀	5 0m	40	500K		2k	△		50m	1 0	120u			60		60m	75S	Ge	DO7
82	1N418	60	300n⌀	5 0m	40	500K		2k	△		7 0m	1 0	120u			60		16m	75S	Ge	DO7
83	1N631	60 $	300n	5 0m	40	500K	50m⌀	2k			50m	3 5						60m	55A	Ge	DO7
84	1N632	60	300n⌀	5.0m	40	500K	80m⌀	2k	△		7 0m	1 0	120u			60				Ge	DO7
85	1N891	60	300n	5 0m	40	80k			△		50m	1 0	100n	25u	100	50				Si	DO7
86	1N3204	60	300n	20m	4 0	80K	5 0m	2k	⌀	100n$	35m	40	50u			25		60m	100S	Ge	DO7
87#	BSA12	60 ⌀	300n	500m	50		5 0m⌀	1k			400m	1.0	.25u	05m	150	60	7 5pt	400m	150A	Si§	A1
88	CSD2312	60	300n	5 0m	40	400K		2k	△		5 0m	1 5	25u	20m	100	60				Si	DO7
89	DR362	60 *	300n	40m	10	20K			△		100m	1.0	50u			20				Ge⌀	DO7
90	HMG659	60 ⌀	300n	30m	35	400k			△		6 0m	1 0	5 0u	25u	100	50				Si	M208b
91	HMG891	60 ⌀	300n	5 0m	40	80k			△		50m	1 0	100n	25u	100	50				Si	M208b
92	MC659	60	300n	30m	35	400k					6 0m	1 0	5 0u	25u	100	50			175A		A2c
93	MC659A	60	300n	30m	35	400k					10m	1 0	25n	25u	150	50			175A		A2c
94	MC891	60	300n	5 0m	40	80k					50m	1 0	100n	25u	150	50			175A		A2c
95	MD06	60	300n	30m	35	400K		2k	△		20m	1 0	01u	02m	150	50	2 0p	75m	150A	Si#	A2
96	PS721	60 †	300n⌀	5 0m	40	100K		2 3k	△		5 0m	1 0	5.0u	05m	100	45	3 0pt	40m	150A	Si△	A60p
97	1N119	60 ⌀	500n⌀			400K					5 0m	1 0		125m	55	50		25m	90A	Ge⌀	A47a
98	1N120	60 ⌀	500n⌀			200K					5 0m	1 0		250m	55	50		25m	90A	Ge⌀	A47a
99	1N480	60 ⌀	500n⌀	30m	35	400K					5 0m	1.0		125m	60	50		35m	90A	Ge⌀	DO7
100	1N490	60 ⌀	500n⌀	30m	35	200K					5 0m	1 0		250m	60	50		25m	90A	Ge⌀	A1ft
101	JAN1N691	60 $	500n⌀	500m	50			1k	△		400m	1 0	.10u	05m	150A	60	40p⌀	250m	175A	Si	DO7
102	1N793	60	500n	5 0m	40	200K		2k	△		10m	1 0	1 0u	03m	100	50		180m	200A	Si△	A60p
103	1N793M	60	500n	5 0m	40	200K					10m	1 0	1 0u	03m	100	50				Si	A2a
104	1N795	60 $	500n	5 0m	40			2 0k			50m	1 0	5 0u	30u	100	50		250m	200A	Si△	A60p
105	1N796	60	500n	5 0m	40	100K		2k	△		100m	1 0	5 0u	.03m	100	50		300m	200A	Si	A60p
106	HMG793	60 ⌀	500n	5 0m	40	200K			△		10m	1 0	1 0u	03m	100	50				Si	M208b
107	HMG795	60 ⌀	500n	5 0m	40	200K			△		50m	1 0	5.0u	03m	100	50				Si	M208b
108	HMG796	60 ⌀	500n	5 0m	40	100K			△		100m	1 0	5 0u	03m	100	50				Si	M208b
109	MC795	60	500n	5.0m	40	200K					50m	1 0	5 0u	.03m	100	50			175A		A2c
110	MC796	60	500n	5.0m	40	100K					100m	1 0	5 0u	03m	100	50			175A		A2c

SYMBOLS AND CODES EXPLAINED IN INTERPRETER

4. SWITCHING DIODES

IN ORDER OF (1) PIV, (2) RECOVERY TIME, and (3) TYPE No.

LINE No	TYPE No. [3]	PIV [1] (V)	RECOVERY TIME [2] Trr (s)	TEST CONDITIONS If (A)	Vr (V)	Zr (Ω)	Ir (A)	RL (Ω)	CKT	STORE TIME (s)	MIN. FORWARD CURRENT at 25°C IF (A)	at Vf (V)	MAX. REVERSE CURRENT Ir @25°C & Vr (A)	Ir at T & Vr (A)	TEMP T (°C)	TEST VOLT Vr (V)	CAP. at ZERO VOLTS (F)	ABSOLUTE MAX RATING AVG. FWD I (A)	MAX. TEMP (°C)	DESCRIPTION MAT.	DWG. No.
1	CSD2316	60	1 0u	5 0m	40	400K		2k	Δ		5 0m	1 5	.25u	20m	100	60				Si	DO7
2	DR481	60 *	1 0u	5 0m	20	50K			Δ		100m	1 0	100u			20				GeØ	DO7
3	DR672	60 *	1 0u	30m	35	400K			Ø		100m	1 0	.50u	01m	100	35				Si	DO7
4	DR827	60 *	1 0u	5.0m	40	200K			Δ		100m	1 0		05m	150	40				Si	DO7
5	HD2135A	60	1 0u	20m	20	100K					5.0m	1.0	100u			50				GeØ	DO7
6	1N924	60	2 0u	30m	20	400k			Ø		30m	1 0	25n	5 0u	150	60				Si	DO7
7#	SX641	60	2.0uØ								100m	1 5	500n	5 0u	100	60	5 0p	300m	150A	Si*	C6
8#	SFD4473	60	600u*Ø	10m	10			100					10u			60	1.5p§		175S	Si	DO17
9	HP5082-0180	65 Ø	.40n*Ø							100n§§	250m	1.0 Δ	01u			10	8.0pØ		175A	Si$	DO7
10	HP5082-0240	65 Ø	40n*							100n§§	450m	1 0 Δ	01u			10	8.0pØ		175A	Si$	F27d
11	HP5082-0241	65 Ø	.40n*							100n§§	600m	1 0 Δ	.01u			10	8.0pØ		175A	Si$	F27d
12	MS5240-4A	65	500pØ														8.0pØ		175A	Si$Δ	F56h
13	MS5240-8	65	500pØ														8.0pØ		175A	Si$Δ	F27d
14	MS5240-16A	65	500pØ														8 0pØ		175A	Si$Δ	S268b
15	MS5241-4A	65	500pØ														8.0pØ		175A	Si$Δ	F56h
16	MS5241-8	65	500pØ														8.0pØ		175A	Si$Δ	F27d
17	MS5241-16A	65	500pØ														8.0pØ		175A	Si$Δ	S268b
18	HMG915	65 Ø	10n	10m	10		1 0mØ				50mØ	1.0	25n	5.0u	100	20	4.0p			Si	M208b
19	1N3069	65	50nØ	30m			30m	100			50m	1 0 Δ	10u	.10m	150A	50	6.0pØ		200S	Si	DO7
20	HMG3069	65 Ø	50n	30m	30		1 0mØ				50m	1 0	10u	10m	150	50	6 0p			Si	M208b
21	HP5082-0300	65 Ø	100n§								1	1.1 Δ					11pØ		200A	Si$	S268
22#	ZC0181	65	100n▼					50		500p*Ø			10n				8.0pØ			#	DO7
23#	ZC0241	65	100n▼					50		500p*Ø			10n				8 0pØ			#	F27v
24	1N927	65	150nØ	5 0m	10		10m	1k			10m	1.0	.10u	01m	100	10	4.0pØ	120m	150A	SiΔ	A60p
25	HMG927	65 Ø	150n	5.0m	10	20k			Δ		10m	1.0	5.0u	25u	100	50	4.0p			Si	M208b
26	1N3069M	65	200n	5.0m	40	200K					50m	1.0	.50u	.02m	100	50				Si	A2a
27#	1S445Ø	65	450nØ	20m	12						15m	500m	300u			60	1.0pØ	100m	85J	GeØ	DO7
28	HP5082-2800	70	.10n§	2 0m							15m	1.0 Δ	.20u			50	2 0pØ		200	%♦	A1ad
29	MMD6050	70	1 5n	10m			10m				1.0m	550mΔ	100n				1.2p	200m	135J	Si	M445
30	MMD6100	70	1.5n	10m			10m				1.0m	550mΔ	100n				1 2p	200m	135J	Si	M445a
31	MMD6150	70	1.5n	10m			10m				1.0m	550mΔ	100n				1 2p	200m	135J	Si	M445b
32	MMD7000	70	1.5n	10m			10m				1.0m	550mΔ	100n				1.2p	200m	135J	Si	M445c
33#	SFD143	70	4 0nØ	10m	6 0			100			10m	1.0 Δ	1 0u				4 0pØ	.15	200S	Si#	DO35
34#	SFD183	70	4 0nØ	10m	6 0			100			10m	1.0 Δ	1.0u				4 0pØ	75m	175S	Si#	DO7
35	Q70-500	70	5.0n	10m	6 0	3 0K		120			50m	1.0	600u			70			75A	Ge*	DO7
36	Q70-500A	70	5 0n	10m	6 0	3 0K		120			10m	70	600u			70			75A	Ge*	DO7
37	1N4444	70 Ø	7 0nØ	10m			10m				100	1 0 Δ	50n	50u	150A	50	2.0pØ		200S	Si	DO35
38	1N4863	70 Ø	7 0nØ								100m	1 2 Δ	50n	50u	150A	50	2 0pØ		200S	Si	DO35
39#	1S1302	70	7 0nØ	10m	1 0		Ø	50			100m	1 0 Δ	500n			30	4.2pØ	250m	175S	Si$#	A1bw
40#	1S953#	70	10n	200m			200m	100			200m	1 0	200n	25u	100		4.0pØ	225m	150	Si	DO7
41	1N3298A	70 †	20nØ	500m	30		50mØ	50			500m	.90	200n	45u	150	60	5.0pØ	300m	175A	Si	A1cs
42#	1S951Δ	70	25nØ	200m			200m				350m	1 3 Δ	20u		25A	70	4.0pØ	225m	150S	Si$#	A9g
43#	BAW33	70	25n	200m			200m†				350m	1.3	20u				4.0pØ	225m	175A	Si	DO35
44#	ZS133	70	70n	600m			600m	100			600m	1.7	2.0u	25u	100A	70	15p*Ø	250m	175A	Si*	DO7
45	MSD6150	70	100nØ	10m	5 0		10m				10m	1 0 Δ	100n			50	5.0p		135J	Si$	L8g
46	1N3669	70	200n†	300m	10		200m				400m	1.1	.25u			70		270m	200J	Si	DO7
47	1N4086	70	200n	300m	10	2 0K		200			200m	1.0	.25u			70	10p		200S	Si	DO7
48	HMG3669	70 Ø	200n	300m	10		200mØ				400m	1.1	.25u			70	10p†			Si	M208b
49	HMG4086	70 Ø	200n	300m	10		5 0mØ				200m	1.0	.25u			70	10p†			Si	M208b
50#	HS9096	70	200n	500m	50			1 0k			200m	1.0	250n	25u	150	50		140m	175	Si#$	A1aq
51	SG211	70	300nØ	5 0m	40			2k	Δ		5 0m	1.5	.25u	02m	100	60	2.0p	30m	150A	Si	A1
52	T16	70 *	300n	5 0m	40	80K					40m	1.0								GeØ	A9k
53	DR482	70 *	400n	25m	35	43K			Δ		100m	1 0	15u			40				GeØ	DO7
54	1N192	70 $	500n	30m	35	50K	.70mØ		Ø		5 0m	1.0	250u			50	1 0p	30m	90	GeØ	A1bz
55	1N818	70	500n	20m	40	80K					30m	1 5	25u	02m	100	60				Si	A1bz
56	DR500	70 *	500n	5.0m	40	500K			Δ		20m	1 0	12u			25				GeØ	DO7
57	SG221	70	500nØ	20m	40			2k	Δ		30m	1.5	25u	.02m	100	60	2.0p	55m	150A	Si	A1
58	1N934	70	1.0u	30m	35	400k					30m	1 0	25n	5.0u	100	60				Si*	DO7
59	1N4862	70 Ø	1 0uØ	40m	10			2 0k			100m	1 1 Δ	5 0n	10u	150A	50	3 3pØ		200S	Si	DO35
60	1N3484	75									10m	.35	4.0u	06m	60	10	1.2p			Ge	DO7
61	HMG930	75 Ø									100mØ	1 0	10u			50				Si	M208b
62	1N3062	75	2 0nØ	10m	6 0		60m	100			20m	1.0 Δ	10u	.10m	150A	50	1.0pØ		200S	Si	DO7
63	1N3066	75	2 0nØ	10m	6 0		60m	100			10m	1 0 Δ	.10u	.10m	150A	50	1 0pØ		200S	Si	DO7
64	1N3567	75 †	2 0n	10m	6.0		1.0mØ	100	*		100m	1 0	05u	.03m	150	50	2.0pØ	60m	150A	Si	A2
65	1N4310	75 Ø	2 0n	10m	6.0		1.0mØ	100			25m	.53	10u	10m	150A	50	4 0pØ	250m	175A	Si$#	DO7
66	1N4532	75 $	2.0nØ	10m	6 0		1.0mØ	100			10m	1 0	.10u	.10m	150A	50	2 0pØ		200S	Si$	A1e
67	CD6111	75	2.0n	10m	6.0	6 0K					10m	1 0	10u	100m	150	50				Si	A1ce
68	CD6112	75	2 0n	10m	6 0	6 0K					20m	1.0	10u	100m	150	50				Si	A1ce
69	GP175	75	2.0nØ	10m	6 0		1 0mØ	100			1.0m	69 Δ	.05u	.05m	150	20	2.0pØ	75m	175	Si#	DO35
70	HMG3062	75 Ø	2.0n	10m	6 0		1 0mØ				20m	1.0	.10u	.10m	150	50	1.0p			Si	M208b
71	HMG3063	75 Ø	2 0n	10m	6 0		1 0mØ				10mØ	85	.10u	.10m	150	50	2 0p			Si	M208b
72	HMG3065	75 Ø	2 0n	10m	6.0		1.0mØ				20mØ	1.0	10u	.10m	150	50	1 5p			Si	M208b
73	HMG3066	75 Ø	2 0n	10m	6 0		1 0mØ				10m	1.0	10u	10m	150	50	1 0p			Si	M208b
74	HMG3567	75 Ø	2 0n	10m	6 0		1 0mØ				100m	1.0	50n	25u	150	50	2.0p			Si	M208b
75	HMG3604	75 Ø	2.0n	10m	6.0		1.0mØ				50m	1.0	.05u	05m	150	50	2.0p			Si	M208b
76	HMG3606	75 Ø	2.0n	10m	6 0		1 0mØ				20mØ	88	05u	05m	150	50	2 0p			Si	M208a
77	HMG3607	75 Ø	2.0n	10m	6 0		1 0mØ				50m	1.0	.05u	05m	150	50	2 0p			Si	M208b
78	HMG3609	75 Ø	2 0n	10m	6 0		1 0mØ				20mØ	88	.05u	.05m	150	50	2.0p			Si	M208b
79	HMG4151	75 Ø	2.0n	10m	6 0		1 0mØ				50m	1 0	.05u	.05m	150	50	2.0p			Si	M208b
80	HMG4153	75 Ø	2.0n	10m	6 0		1.0mØ				20mØ	.88	05u	05m	150	50	2.0p			Si	M208b
81	HMG4305	75 Ø	2 0n	10m	6 0		1 0mØ				10mØ	85	.10u	10m	150	50	2 0p			Si	M208b
82	HMG9003	75 Ø	2 0n	10m	6.0		1 0m	100			200m	1 0	05u	.10m	150	50	2.0p	150m	200A	Si$	M208b
83	HMG9004	75 Ø	2 0n	10m	6 0		1 0m	100			100mØ	1 0	05u	.10m	150	50	2.0p	150m	200A	Si$	M208b
84	HMG9005	75 Ø	2 0n	10m	6.0		1.0m	100			20m	1 0	.05u	10m	150	50	2.0p	150m	200A	Si$	M208b
85	MC001	75	2 0n	10m	6 0		1 0m	100			10m	1 0	10u	.10m	150	50	2.0pØ		175A	Si	A2c
86	MC001A	75	2.0n	10m	6 0		1 0m	100			20m	1 0	10u	.10m	150	50	2 0pØ		175A	Si	A2c
87	MC50Ø	75	2 0n	10m	6.0		1 0m	100			10m	1 0	.10u	10m	150	50	2.0pØ			Si	M409
88	SP100Δ	75	2 0nØ	10m	6 0		1 0mØ	100			10m	1 0	10u	.10m	150	50	2.0pØ		175A	Si	DO7
89	SP104	75	2 0nØ	10m	6 0		1 0mØ	100	§		100m	1.0	25n	50u	150	50	2.0p		175A	Si	DO7
90	ii7A12	75	3 0nØ	500m	40		50m	3.0			1 0m	.20	10u			37	35pØ	200m	175A	Si	M214a
91	ii7A13	75	3.0nØ	500m	40		50m	3 0			1 0m	.20	10u			37	35pØ	300m	175A	Si	M214a
92	ii7A14	75	3.0nØ	500m	75		50m	3 0			1 0	250m	10u			37	35pØ	400m	125	Si	M214a
93	ii7A15	75	3.0nØ	500m	75		50m	3 0			1 0	250m	10u			37	100pØ	500m	125	Si	M214a
94	ii7A16	75	3.0nØ	500m	75		50m	3.0			1 0	250m	10u			37	100pØ	600m	125	Si	M214a
95	ii7A22	75	3 0nØ	500m	40		50m	3 0			1.0m	20	20u			37	35pØ	200m	175A	Si	M214a
96	ii7A23	75	3.0nØ	500m	40		50m	3 0			1.0m	20	20u			37	35pØ	300m	175A	Si	M214a
97	ii7A24	75	3 0nØ	500m	75		50m	3.0			1 0	250m	20u			37	35pØ	400m	125	Si	M214a
98	ii7A25	75	3 0nØ	500m	75		50m	3 0			1 0	250m	20u			37	100pØ	500m	125	Si	M214a
99	ii7A26	75	3 0nØ	500m	75		50m	3 0			1 0	250m	20u			37	100pØ	600m	125	Si	M214a
100	ii7A52	75	3 0nØ	500m	40		50m	3 0			1.0m	20	50u			37	35pØ	200m	175A	Si	M214a
101	ii7A53	75	3 0nØ	500m	40		50m	3 0			1 0m	.20	50u			37	35pØ	300m	175A	Si	M214a
102	ii7A54	75	3 0nØ	500m	75		50m	3 0			1 0	250m	50u			37	35pØ	400m	125	Si	M214a
103	ii7A55	75	3 0nØ	500m	75		50m	3 0			1.0	250m	50u			37	100pØ	500m	125	Si	M214a
104	ii7A56	75	3 0nØ	500m	75		50m	3 0			1.0	250m	50u			37	100pØ	600m	125	Si	M214a
105	ii7B12	75	3 0nØ	500m	40		50m	3 0			1 0m	.27	10u			37	35pØ	200m	175A	Si	M214a
106	ii7B13	75	3 0nØ	500m	40		50m	3 0			1 0m	.27	10u			37	35pØ	300m	175A	Si	M214a
107	ii7B14	75	3 0nØ	500m	75		50m	3 0			1.0	325m	10u			37	35pØ	400m	150	Si	M214a
108	ii7B15	75	3 0nØ	500m	75		50m	3 0			1.0	325m	10u			37	100pØ	500m	150	Si	M214a
109	ii7B16	75	3 0nØ	500m	75		50m	3 0			1 0	325m	10u			37	100pØ	600m	150	Si	M214a
110	ii7B22	75	3 0nØ	500m	40		50m	3.0			1.0m	27	20u			37	35pØ	200m	175A	Si	M214a

SYMBOLS AND CODES EXPLAINED IN INTERPRETER

4. SWITCHING DIODES

IN ORDER OF (1) PIV, (2) RECOVERY TIME, and (3) TYPE No.

LINE No.	3 TYPE No	1 PIV (V)	RECOVERY TIME 2 Trr (s)	TEST CONDITIONS If (A)	Vr (V)	Zr (Ω)	Ir (A)	RL (Ω)	CKT	STORE TIME (s)	MIN. FORWARD CURRENT at 25°C IF (A)	at Vf (V)	MAX. REVERSE CURRENT Ir @25°C & Vr (A)	Ir at T & Vr (A)	TEMP T (°C)	TEST VOLT Vr (V)	CAP. at ZERO VOLTS (F)	ABSOLUTE MAX RATING AVG. FWD I (A)	MAX. TEMP (°C)	MAT.	DESCRIPTION DWG. No.
1	µ7B23	75	3 0nØ	500m	40		50m	3 0			1.0m	27	20u			37	35pØ	300m	175A	Si	M214a
2	µ7B24	75	3.0nØ	500m	75		50m	3 0			1 0m	325m	20u			37	35pØ	400m	150	Si	M214a
3	µ7B25	75	3 0nØ	500m	75		50m	3.0			1.0m	325m	20u			37	100pØ	500m	150	Si	M214a
4	µ7B26	75	3.0nØ	500m	75		50m	3 0			1.0m	325m	20u			37	100pØ	600m	150	Si	M214a
5	µ7B52	75	3 0nØ	500m	40		50m	3.0			1 0m	.27	50u			37	35pØ	200m	175A	Si	M214a
6	µ7B53	75	3 0nØ	500m	40		50m	3 0			1.0m	27	50u			37	35pØ	300m	175A	Si	M214a
7	µ7B54	75	3 0nØ	500m	75		50m	3 0			1 0m	325m	50u			37	35pØ	400m	150	Si	M214a
8	µ7B55	75	3 0nØ	500m	75		50m	3 0			1 0m	325m	50u			37	100pØ	500m	150	Si	M214a
9	µ7B56	75	3 0nØ	500m	75		50m	3 0			1 0m	325m	50u			37	100pØ	600m	150	Si	M214a
10	MCPD520A	75	3 0n	10m	6 0		1.0m				50m	1 0	50n			30	4 0pØ		150A	Si	M411
11	MCPD520B	75	3 0n	10m	6.0		1 0m				50m	1 0	50n			30	4.0pØ		150A	Si	M411a
12	MCPD520C	75	3 0n	10m	6 0		1 0m				50m	1 0	50n			30	4 0pØ		150A	Si	M277d
13	1N914A	75	4 0nØ	10m	6 0		1 0mØ	100			20m	1 0	25n	50u	150	20	2 0pØ	75m	150A	Si△	A60p
14	1N914B	75	4.0nØ	10m	6 0		1 0m				100m	1.0 △	25n	50u	150A	20	4 0pØ	75m	150A	Si△	A1
15	1N914M	75	4 0n	10m	6 0	6 0k					10m	1 0	25n	50u	150	20				Si*	
16	1N916A	75	4.0nØ	10m	6 0	6 0k	1 0mØ	100			20m	1 0	25n	50u	150	20	2.0pØ	75m	150A	Si△	DO7
17	1N916B	75	4 0nØ	10m	6 0		1.0mØ	100			30mØ	1 0	25n	50u	150	20	2 0pØ	150m	200	Si	DO7
18	1N3063	75	4.0nØ	10m	1.0		10mt	100			10m	85 △	.10u	10m	150A	50	2 0pØ		200S	Si	DO7
19	1N3064	75	4.0nØ	10m	1 0		10mt	100			10m	1 0 △	10u	10m	150A	50	2 0pØ		200S	Si	DO7
20	1N3064M	75	4 0n	10m	1 0	6 0K					10m	1.0	.10u	10m	150	50	2 0p			Si	A2a
21	1N3065	75	4 0nØ	10m	1 0		10mt	100			20m	1 0 △	.10u	10m	150A	50	1 5pØ		200S	Si	DO7
22	1N3604	75 $	4 0nØ	10m			10mt				50m	1 0 △	50n	50u	150A	50	2 0pØ		200S	Si	DO7
23	1N3606	75	4 0nØ	10m			10mt				100u	550m△	50n	50u	150A	50	2 0pØ		200S	Si	DO7
24	1N3607	75	4 0nØ	10m			10mt				50m	1 0 △	50n	50u	150A	50	2 0pØ		200S	Si	M50
25	1N3609	75	4 0nØ	10m			10mt				100u	550m△	50n	50u	150A	75	2 0pØ		200S	Si	M50
26	1N4148	75	4 0nØ	10m	6 0		1 0m	100			10m	1 0 △	25n	50u	150A	20	4 0pØ		200S	Si	DO35
27	1N4149	75	4 0nØ	10m	6 0		1 0m	100			10m	1 0 △	25n	50u	150A	20	2 0pØ		200S	Si	DO35
28	1N4151	75	4 0nØ	10m			10m				50m	1 0 △	50n	50u	150A	50	2.0pØ		200S	Si	DO35
29	1N4153	75	4 0nØ	10m			10m				20m	880m△	50n	50u	150A	50	2 0pØ		200S	Si	DO35
30	1N4305	75	4 0nØ	10m			10m				10m	850m△	100n	100u	150A	50	2.0pØ		200S	Si	DO35
31	1N4446	75 Ø	4.0nØ	10m	6 0			100			20m	1.0 △	25n	50u	150A	20	4 0pØ		200S	Si	DO35
32	1N4447	75 Ø	4 0nØ	10m	6 0			100			20m	1 0 △	25n	50u	150A	20	2 0pØ		200S	Si	DO35
33	1N4448	75 Ø	4 0nØ	10m	6 0			100			100m	1 0 △	25n	50u	150A	20	4 0pØ		200S	Si	DO35
34	1N4449	75 Ø	4 0nØ	10m	6 0			100			30m	1 0 △	25n	50u	150A	20	2 0pØ		200S	Si	DO35
35	1N4454	75	4 0nØ	10m			10m				10m	1 0 △	100n	100u	150A	50	2 0pØ		200S	Si	DO35
36	1N4531	75 $	4 0nØ	10m	6 0		1 0mØ	100			10m	1.0	25n	50u	150A	20	4 0pØ		200S	Si$	A1e
37	1N5318	75 Ø	4 0nØ	10m			10mt	100			200m	1 0 △	10u	10m	150	50	2 5pØ	125m	150A	Si	DO34
38	BAW62	75	4.0nØ	10m	1 0		1 0m	100			100m	1 0	25n	50u	150J	20	2.0p	100m	200J	Si#$	DO35
39#	BAX91C/TF102																				
		75	4 0n	10m			10mt		*		10m	1 0	10u			50	3 0pØ	50m	175A	Si	DO35
40#	BAX95TF600	75	4 0n	10m			10m				200m	1 0	100n			50	3 0p	200m	175	Si	DO35
41	FD600	75 Ø	4 0nØ	200m			200mt	100	△		1 0m	62	10u	10m	150	50	2 5pØ	200m	150A	Si$#	DO7
42	FDN600	75 Ø	4 0n	10m			10mt	100			200m	1 0 △	10u	10m	150	50	2 5pØ	125m	150A	Si#$	DO34
43	HMG3064	75 Ø	4 0n	10m	10		1 0mØ				10m	1.0	10u	10m	150	50	2 0p			Si	M208b
44	HMG3598	75 Ø	4 0n	10m	10		1 0mØ				10mØ	85	.10u	10m	150	50	2 0p			Si	M208b
45	HMG4319	75 Ø	4 0n	10m	6 0		1 0mØ				100mØ	1 0	10u	10m	150	50	1 0p			Si	M208b
46#	HS9501	75	4 0n	10m			10m	100					10u	10m	150A	40	4 0p	350m	200A	Si#$	A1y
47#	HS9504	75	4 0n	10m			10m	100					10u	10m	150A	40	4 0p	250m	200A	Si#$	A1y
48#	HS9507	75	4 0n	10m			10m	100					10u	10m	150A	40	4.0p	150m	200A	Si#$	A1y
49#	ITT33	75	4 0n	10m	6 0		1 0m	100			10m	1 0 △	50n	100u	150	35	4 0pØ	75m	200J	#$	A1sy
50	MA4307	75	4 0nØ	10m	5 0		1 0mØ	100			30m	1 0	05u	05m	150	75	2 0pØ	100m	200J	Si	A2b
51	MA4308	75	4 0nØ	10m	5 0		1 0mØ	100			30m	1 0	05u	05m	150	75	2 0pØ	125m	200J	Si	A2b
52	MC52	75	4 0n	10m	6 0		1 0m	100			10m	1 0	10u	10m	150	50	2.0pØ			Si	M409
53	MC433	75	4 0n	10m			10m	100			50m	1 0	05u	05m	150	50	2.0pØ		175A	Si	A2c
54#	MGD73	75	4.0nØ	10m	6 0			100			10m	1 0 △	400n				2 0pØ	200m	200J	Si#	DO35
55	MHD611	75	4 0nØ	10m	6 0		1 0mØ	100			20m	1 0	25n	50u	150	20	4.0pØ	150m	200	Si	A1e
56	MHD612	75	4 0nØ	10m	6 0		1 0mØ	100			100mØ	1 0	25n	50u	150	20	4.0pØ	150m	200	Si	A1e
57	MHD614	75	4 0nØ	10m	6 0		1 0mØ	100			20m	1 0	25n	50u	150	20	2.0pØ	150m	200	Si	A1e
58	MHD615	75	4 0nØ	10m	6 0		1 0mØ	100			30m	1 0	25n	50u	150	20	2 0pØ	150m	200	Si	A1e
59	MMC1001	75 †	4.0nØ	10m	6 0		1 0mØ	100			70mØ	92	05u	10m	150	50	2.0p*Ø		200S	Si	A188
60	MMC1002	75 †	4 0nØ	10m	6 0		1 0mØ	100			70mØ	95	05u	10m	150	50	2 0p*Ø		200S	Si	A188
61	MMC1003	75 †	4 0nØ	10m	6 0		100m				70mØ	1 0	05u	10m	150	50	2 0p*Ø		200S	Si	A188
62	MMC1004	75 †	4 0nØ	10m	6.0		1 0mØ	100			150mØ	1 0	05u	10m	150	50	3 0p*Ø		200S	Si	A188
63	MMC1005	75 †	4 0nØ	10m	6 0		1 0mØ	100			70mØ	1 0	05u	10m	150	50	3 0p*Ø		200S	Si	A188
64	MMC1006	75 †	4 0nØ	10m	6 0		1 0mØ	100			70mØ	1 0	05u	10m	150	50	4.0p*Ø		200S	Si	A188
65	MMC1007	75 †	4 0nØ	10m	6 0		1 0mØ	100			150mØ	1 5	05u	10m	150	50	4 0p*Ø		200S	Si	A188
66	SG5200	75 Ø	4 0n	10m	6 0		1 0m	100			400m	1 0	25u	10m	150	50	4 0pØ	250m	175A	Si	DO7
67	SG5260	75 Ø	4 0n	10m	6 0		3 0mØ	100			100m	90	25n	100u	150	20	6 0pØ	200m	175A	Si$#	DO7
68	TMD914	75	4 0n	10m	6.0		3.0mØ	75			10m	1 0	5 0u			75	4 0p	20m	150S	Si△	A2
69	TMD916	75	4 0n	10m	6 0		3 0mØ	75			10m	1 0	5 0u			75	4 0p	20m	150S	Si△	
70	1N3601	75	5 0n	10m			10m				10m	1 0	10u	10m	150	75	3 0pØ			Si	DO7
71	FD6666	75 Ø	5 0nØ	10m			10m	100			10m	.75	10u	02m	100	55	5pØ	200m	150A	Si$#	A1ce
72	HMG3602	75 Ø	5 0n	10m	10		1 0mØ				20m	1 0	10u	10m	150	50	3 0p			Si	M208b
73	TID38	75 †	5 0nØ	10m			10m	100			1 0m	750m△	25n			70	3 0pØ		200S	Si#	DO35
74	JAN1N4500	75 $	6 0nØ	10m			10m	100	△		20m	770m△	100n	100u	150A	75	4 0pØ	300m	175A	Si	DO7
75#	BAW46	75 Ø	6 0nØ	10m			10m	100			30m	1 0 △	100n	100u	125	50	4 0pØ	75m	150J	Si†	DO7
76#	BAW55	75 Ø	6 0nØ	20			20	100			20	1 0 △	100n	100u	125	50	4 0pØ	.19	150J	Si†$	DO7
77	FDH600	75 Ø	6 0nØ	300m			300mt	100			200m	1 0 △	10u	10m	150A	50	2 5pØ	200m	150A	Si$#	A1ap
78	MHD617	75 #	6 0nØ	400m			400mt	100			200mØ	1 0	10u	10m	150	50	2 5pØ	150m	200	Si	A1e
79	TID31	75 Ø	6.0nØ	200m			200mt	100			200m	1 0 △	10u	10m	150A	50	2 5pØ	150m	150A	Si$#	A1aq
80	TID37	75 Ø	6 0nØ	200m			200m	100					100n	100u	150A	50	4 0pØ	150m	150A	Si$#	A1aq
81	MMC1101	75 †	8 0n	10m			10mt				200mØ	90	07u	10m	150	50	5 0p*Ø		200S	Si	A1p
82	MMC1102	75 †	8 0n	10m			10mt				200mØ	95	07u	10m	150	50	5 0p*Ø		200S	Si	A1p
83	MMC1103	75 †	8.0n	10m			10mt				200mØ	1 0	07u	10m	150	50	5 0p*Ø		200S	Si	A1p
84	µ7C14	75	9 0nØ	500m	75		50m	3 0			1 0	450m	10u			37	20pØ	400m	175	Si	M214a
85	µ7C15	75	9 0nØ	500m	75		50m	3 0			1 0	450m	10u			37	20pØ	500m	175	Si	M214a
86	µ7C16	75	9 0nØ	500m	75		50m	3 0			1 0	450m	10u			37	20pØ	600m	175	Si	M214a
87	µ7C24	75	9 0nØ	500m	75		50m	3 0			1 0	450m	20u			37	20pØ	400m	175	Si	M214a
88	µ7C25	75	9 0nØ	500m	75		50m	3 0			1 0	450m	20u			37	20pØ	500m	175	Si	M214a
89	µ7C26	75	9 0nØ	500m	75		50m	3.0			1 0	450m	20u			37	20pØ	600m	175	Si	M214a
90	µ7C054	75	9 0nØ	500m	75		50m	3 0			1 0	450m	5.0u			37	20pØ	400m	175	Si	M214a
91	µ7C055	75	9 0nØ	500m	75		50m	3 0			1 0	450m	5 0u			37	20pØ	500m	175	Si	M214a
92	µ7C056	75	9 0nØ	500m	75		50m	3 0			1 0	450m	5 0u			37	20pØ	600m	175	Si	M214a
93	GSM57	75	10nØ	10m	6 0		1 0mØ	100			10m	1 0	1 0u			50	10pØ		150	Si§	A2c
94	HG1007	75	10n	10m	6 0		1 0mØ	100			20m	1 0		.05m	25	50	20p	45m	90J	Ge	DO7
95	HG1008	75	10n	10m	6 0		1 0mØ	100			20m	1 0		10m	25	50	20p	45m	90J	Ge	DO7
96	HG1009	75	10n	10m	6 0		1 0mØ	100			10m	1 0		05m	25	50	20p	45m	90J	Ge	DO7
97	HG1010	75	10n	10m	6 0		1.0mØ	100			10m	1.0		.10m	25	50	20p	45m	90J	Ge	DO7
98	HG1011	75	10n	10m	6 0		1 0mØ	100			5 0m	1.0		05m	25	50	20p	45m	90J	Ge	DO7
99	HG1012	75	10n	10m	6 0		1 0mØ	100			5 0m	1.0		10m	25	50	20p	45m	90J	Ge	DO7
100	TID33	75 Ø	10nØ	200m			200mt	100			200m	1 0 △	10u	10m	150A	50	4 0pØ	150m	150A	Si$#	A1aq
101	TID35	75 Ø	10nØ	200m			200mt	100			150m	1 0 △	10u	10m	150A	50	4 0pØ	150m	150A	Si$#	A1aq
102	MMC1104	75 †	12n	10m			10mt				200mØ	1 0	75n	100u	150	50	5.0p*Ø		200S	Si	A1p
103	MMC1107	75 †	12n	10m			10mt				200mØ	1 0	75n	100u	150	50	8.0p*Ø		200S	Si	A1p
104	MMC1105	75 †	15n	10m			10mt				200mØ	1 0	75n	100u	150	50	5 0p*Ø		200S	Si	A1p
105	MMC1106	75 †	15n	10m			10mt				400mØ	1 0	75n	100u	150	50	5 0p*Ø		200S	Si	A1p
106	MMC1108	75 †	15n	10m			10mt				200mØ	1.0	75n	100u	150	50	8 0p*Ø		200S	Si	A1p
107	MMC1109	75 †	15n	10m			10mt				400mØ	1.0	75n	100u	150	50	8 0p*Ø		200S	Si	A1p
108	TID39	75 †	20nØ	10m			10m	100			1 0m	750m△	25n			70	5 0pØ		200S	Si#	DO35
109#	EB383	75 Ø	75nØ	30m			30m				50m	1 0	.10u	.01m	100	50	6 5pØ	75m	150A	Si#	DO7

SYMBOLS AND CODES EXPLAINED IN INTERPRETER

4. SWITCHING DIODES

IN ORDER OF (1) PIV, (2) RECOVERY TIME, and (3) TYPE No.

LINE No	3 TYPE No	1 PIV (V)	RECOVERY TIME 2 TEST CONDITIONS Trr (s)	If (A)	Vr (V)	Zr (Ω)	Ir (A)	RL (Ω)	CKT	STORE TIME (s)	MIN. FORWARD CURRENT at 25°C IF (A)	at Vf (V)	MAX. REVERSE CURRENT Ir @25°C & Vr (A)	Ir at T & Vr (A)	TEMP T (°C)	TEST VOLT Vr (V)	CAP. at ZERO VOLTS (F)	ABSOLUTE MAX RATING AVG. FWD I (A)	MAX. TEMP (°C)	DESCRIPTION MAT.	DWG. No.
1	MMC1205	75	75n	1			500m△				1 ☑	83	1 0u	2 0m	150	50	100p*☑		200S	Si	A1q
2	MMC1206	75 †	75n	1			500m△				1 ☑	86	1.0u	2.0m	150	50	100p*☑		200S	Si	A1q
3	MMC1207	75 †	75n	1			500m△				1 ☑	93	1.0u	2.0m	150	50	100p*☑		200S	Si	A1q
4	MMC1208	75 †	75n	1			500m△				1 5 ☑	1 0	1 0u	2 0m	150	50	100p*☑		200S	Si	A1q
5#	ZC601	75	100n▼					50		700p*☑			50n				3.8p☑			#	DO7
6#	BAY39	75	160n☑	500m	50		5 0m	1k			500m	1 0	10u	10m	150	75	20p☑	450m	190J	Si	DO7
7#	CG81H	75	200n	10m	10	1 0K					100m	1 1		30m	60	75	3.0p☑			Ge∅	A1bj
8#	AAZ15	75	350n△	10m	0		100m				10m	45 △	25u	.12m	60	75	2.0p☑		85J	Ge∅	DO7
9	1N627A	75	500n	30m	35	400K					10m	1 5	.10u	03m	150	75				Si	DO7
10	1N777	75	500n	30m	40	50k		2 0k			100m	1 0		125u	55A	50	10p		90A	Ge	DO7
11	PD127	75	500n	5.0m	40	200K		2k	△		100m	1.0	5 0u	05m	100	75	2.0p†	60m	200A	Si	A2
12#	1S1217	75	750n☑	2 0m			200u		☑		200m	1.0	300u			50	500m§	100m	90A	Ge∅	A1bw
13#	1S954	75	3 0 ☑	10m	6 0			100	☑		100m	1 0	100n			50	3.5 ☑	200m	200A	Si$#	A60g
14	PR0115	80 ☑	30n*☑	10m	10			100		125n§			50u			75	2.0p☑		175A	Si$△	F27d
15	PR0116	80 ☑	.40n*☑	10m	10			100		125n§			.50u			75	4.0p☑		175A	Si$△	F27d
16	PR0117	80 ☑	50n*☑	10m	10			100		125n§			50u			75	8.0p☑		175A	Si$△	F27d
17#	X6G851	80 ☑	70n*☑							200n							2.0p§			Si	F27d△
18	1N3568	80	2 0n	10m	6 0		1 0m	100			20m	1 0		02m	150	50	2 0p		150A	Si	A94
19	1N4314	80 †	2 0n	10m	6 0		1 0m∅	100			25m	53	10u	10m	150	75	2.0p☑		200	Si	A94a
20	1N4317	80 †	2.0n	10m	6 0		1 0m∅	100			25m	53	10u	10m	150	75	2.0p☑		200	Si	A94a
21	1N5413	80 ☑	2.0n☑	10m	6 0			100			.10m	50 △	10u	10m	150A	80	2.0p☑	200m	175A	Si	DO35
22♦	1N3257	80	3 0n☑	10m	6 0		1 0m				30m	1.0 △	25n	25u	150	50	2.0p☑		175A	Si	A274
23♦	1N3258	80	4 0n☑	10m	6.0		1.0m				100m	1 0 △	25n	25u	150	50	4.0p☑		175A	Si	A274
24	1N4313	80 †	4 0n	10m	6 0		1 0m∅	100			25m	53	10u	10m	150	75	1.0p☑		150	Si	DO7
25	1N4319	80 †	4 0n	10m	6 0		1 0m∅	100			25m	.53	.10u	10m	150	50	1 0p☑		200	Si	A94a
26	1N4500	80 $	4.0n☑	10m	6 0		1 0m∅	100			30m	1 0	10u	10m	150	75	4.0p☑		175A	Si	DO7
27	1N4610	80 ☑	4 0n☑	10m			10m	100			.30m	1.1	.10u	10m	155	55	2 0p☑		175A	Si	DO7
28	1N5282	80 ☑	4 0n☑	10m			10m†	100			100m	90 △					2 5p☑	200m	150A	Si	DO35
29	1N5317	80 ☑	4 0n☑	10m			10m†	100			300m	1.1 △	10u	10m	150	55	2 5p☑	125m	150A	Si	DO34
30	Q80-500	80	5 0n	10m	6 0	3 0K		120			50m	1.0	800u			80			75A	Ge*	DO7
31	Q80-500A	80	5 0n	10m	6 0	3 0K		120			10m	.70	800u			80			75A	Ge*	DO7
32#	CG70H	80	5 4n	10m	10	1 0K					3.0m	1.0	1.0m			80	1 4p☑			Ge☑	A1bj
33	JAN1N5282	80 ☑	10n$☑	200m	1 0						10m	.73 △	10u	.10m	150A	55	2 5p☑	200m	150A	Si	DO35
34	JAN1N5317	80 ☑	10n$☑	200m	1 0						10m	.73 △	10u	10m	150A	55	2 5p☑	125m	150A	Si	DO34
35	Q80-750	80	12n	1.6m	3 0						80m	1 0	100u			80			75A	Ge∅	DO7
36#	BAY43	80	15n☑	200m			200m†				200m	1.0	05u			40	5.0p☑			Si$	A171f
37	Q80-950	80	15n	1 6m	3 0						80m	1.0	100u			80			75A	Ge∅	DO7
38	S400△	80	15n☑	400m	30	10K		100			400m	1 0	10u			50	7 0p†		175A	Si△	DO7
39	S500△	80	15n	500m	30	10K		100			500m	1 0	.10u			50	7 0p†		175A	Si△	DO7
40	S504	80	15n	500m	30	10K		100			500m	1.0	10u			50	7.0p†		175A	Si△	DO7
41	S507	80	15n	500m	30	10K		100			500m	1 0	10u			50	7 0p†		175A	Si△	DO7
42	PD9049	80 †	30n☑	100m			100m☑				1	1.0	3 0u	3 0m	125	80			200	Si	A1x
43	S402	80	30n☑	400m	30	10K		100			400m	1.0	10u			50	7 0p†		175A	Si△	DO7
44	PD9050	80 †	75n☑	1			1 ☑				10	1 0	10u	15m	150	80			175	Si	A185d
45	S298	80	200n☑	500m	50	10K		1k			500m	.90	20u			30	7 0p†		175A	Si△	DO7
46	1N419	80	300n☑	5 0m	40	500K		2k	△		125m	1.0	180u			90		60m	75S	Ge	DO7
47	1N921	80	300n☑	500m	50	10K		1k			500m	1 0	25u	05m	150	60		250m	175A	Si	DO7
48	1N3666	80	300n☑			20K					200m	1.0	10u	15m	70	20			100S	Ge∅	DO7
49	JAN1N3666-1	80	300n	30m	10		500m				200m	1 0	10u	150u	70	20	1 0p*☑	70m	100S	Ge	DO7
50	JAN1N3666-2	80	300n	30m	10		500m				200m	1 0	10u	150u	70	20	1 0p*☑	70m	100S	Ge	DO7
51	MD08	80	300n	5 0m	40	100K		2k	△		20m	1.0	01u	01m	150	70		75m	150A	Si#	A2
52	DR562	80 *	400n	10m	20	25K			△		10m	75	10u	05m	150	50				Si	DO7
53	1N818M	80	500n	20m	40	80K					30m	1.0	25u	.02m	100	60				Si	A2a
54	HMG818	80 ☑	500n	20m	40		50m∅		△		30m	1.5	25u	.02m	100	60				Si	M208b
55	1N691	80 *	800n	500m	50	10K		1k			400m	1 0	25u	.05m	150	60	12p☑		175A	Si	DO7
56	PS702	80	1 0u	5 0m	40	200k		1 5k			75m	1 0	20u	50u	100	75		60m	150A	Si△	DO14
57	PS703	80	1 0u	5 0m	40	200k		1 5k			50m	1.0	5.0u	50u	100	75		60m	150A	Si△	DO14
58	SG216	80	1 0u	5 0m	40			2k	△		5 0m	15	.25u	.02m	100	60	2 0p	30m	150A	Si	A1
59	SG226	80	1 0u	20m	40			2k	△		100m	1.5	25u	02m	100	60	2.0p	80m	150A	Si	A1
60	MT712	85	4 0n	10m			10m	100			250m	1 1	100n	25u	100	50	25p	200m	175A	Si	A60e
61	1N4606	85 ☑	6 0n☑	10m			1 0m				250m	1 1 △	100n	25u	100A	50	2.5p☑		200S	Si	DO35
62	MT713	85	8 0n	10m			10m	100			250m	1 3	20u	.05m	100	50	4 5p	200m	175A	Si	A60e
63	1N4607	85 ☑	10n☑	10m			10m				400m	1.1 △	100n	25u	100A	50	4.0p☑		200S	Si	DO35
64	1N4608	85 ☑	10n☑	10m			10m				500m	1 1 △	100n	25u	100A	50	4 0p☑		200S	Si	DO35
65	MT714	85	10n	10m			10m	100			400m	1 1	100n	25u	100	50	4.0p	200m	175A	Si	A60e
66	MT716	85	10n	10m			10m	100			500m	1 1	100n	25u	100	50	4.0p	200m	175A	Si	A60e
67	MB201	85	20n	10m			10m				1 6	1.0	.50u	.10m	100	65	25p		175A	Si	A60f
68	MB208	85	20n	10m			10m				1 2	1 0	1 0u	.20m	100	65	25p		175A	Si	A60f
69	MT715	85	20n	10m			10m	100			400m	1.3	20u	05m	100	50	60p	200m	175A	Si	A60e
70	MT717	85	20n	10m			10m	100			500m	1.3	20u	.05m	100	50	6 0p	200m	175A	Si	A60e
71#	1S1585	90	2 0n☑	10m	6 0			50			100m	1 0	500n			80	2 0p	150m	175J	Si$#	A60g
72	MA4375C	90 ☑	3 0n*☑	10m			100m	100		200n#			1 0u			6.0	1 5p§		150A	Si	DO7
73	MA4375E	90 ☑	3 0n*☑	10m			100m	100									15p§☑		150	Si$	DO7
74▼#	BAX81	90	5 0n☑	10m			10m	100			300m	1.2 △	100n	150u	150A	50	3 5p☑		200S	Si	DO35
75#	1S952#	90	6 0n	200m			200m	100			200m	1 3	500n			70	3 0p☑	225m	150	Si	DO7
76	Q90-500	90	9 0n	10m	6 0	3 0K		120			50m	1 0	100u			90			75A	Ge∅	DO7
77#	36P4	90	10n☑	10m			10m†				10m	1.0 △	06u			50	2 0p☑	75m	200J	Si#	DO35
78▼#	BAV12	90	10n☑	10m			10m	100			300m	1.2 △	100n	150u	150A	50	3 5p☑		200S	Si	DO35
79	1N3872	90	15n	10m	6 0	100K					150m	1.0	10u			75	5 0p☑			Si	DO7
80#	OA86	90	25n								10m	18	250u	50m	60	90			60A		Z43
81#	BAX12☑	90	37n	30m			1 0m	100			10m	750m△		100u	150J	90	25p	400m	200J	Si△§	A257a
82	HMG3872	90 ☑	50n	200m	20		5 0m∅				150m	1 0	10u			75	5 0p			Si	M208b
83	CGD1450	90	80n	10m			3 0m△		*		1 0m	32	4.0u			5.0	40p△		90A	Ge∅	DO7
84	G819	90	80n	10m			10m		*		50m	62 △		4u	25	5 0	40p△			Ge∅	DO7
85#	AAY11	90	140n#	10m	10	3 9K		1k		140n#			250u	50m	60	90		150m	60A	Ge☑	A3
86	1N633	90	300n	5 0m	40	26K		200										60m			DO7
87	DR211	90 *	300n	5.0m	40	50K			△		200m	1 0	100u			50				Ge∅	DO7
88	DR403	90 *	300n	5 0m	40	80K			∅		20m	50	100u			50				Ge∅	DO7
89	DR404	90 *	300n	5 0m	40	50K			∅		20m	50	100u			50				Ge∅	DO7
90	DR408	90 *	300n	5 0m	40	80K			△		200m	1.0	100u			50				Ge∅	DO7
91	DR422	90 *	300n	5 0m	40	50K			△		50m	1 0	300u			50				Ge∅	DO7
92	1N191	90 $	500n	30m	35	50K			△		5.0m	1 0	25u				1 0p	30m	90	Ge☑	DO7
93	DR401	90 *	500n	30m	35	50k			∅		20m	5.0		125u	55	50				Ge∅	DO7
94	DR407	90 *	500n	5 0m	10	50k			∅		5.0m	1 0		12u	55	6 0				Ge∅	DO7
95	DR418	90 *	500n	20m	10	10K	5 0m		△		40m	50		.01m	55	4 0				Ge∅	DO7
96	DR437	90 *	500n	30m	10	10K			△		40m	50		02m	55	4 0				Ge∅	DO7
97	DR295	90 *	1 0u	30m	35	20K			△		1.0m	.20	4 0u	05m	25	2 0				Ge∅	DO7
98	1N460	90	2 0u	30m	35	25K			△		5.0m	1.0		01m	150	75	3.0p	45m	150A	Si	C3e
99	1N460A	90	2 0u	30m	35	25K			△		1.5m	1 0		.01m	150	75	4.5p	60m	150A	Si	C3e
100	1N460B	90	2 0u	30m	35	25K			△		50m	1 0		01m	150	75	5.0p	70m	150A	Si	C3e
101	PR0118	100 ☑	30n*☑	10m	10			100		150n§			50u			95	2 0p☑		175A	Si$△	F27d
102	PR0119	100 ☑	40n*☑	10m	10			100		150n§			.50u			95	4 0p☑		175A	Si$△	F27d
103	PR0120	100 ☑	50n*☑	10m	10			100		150n§			.50u			95	8 0p☑		175A	Si$△	F27d
104	PR0121	100 ☑	60n*☑	10m	10			100		150n§			.50u			95	12.p☑		175A	Si$△	F27d
105	1N4308	100 ☑	2.0n	10m	6 0		1 0m∅	100			.25m	.53	10u	10m	150A	75	2 0p☑	250m	175A	Si$#	DO7
106	1N4311	100 ☑	2 0n	10m	6 0		1 0m∅	100			25m	.53	10u	10m	150A	75	2 0p☑	250m	175A	Si$#	DO7
107	1N5414	100 ☑	2 0n☑	10m	6 0			100			10m	50 △	10u	.10m	150A	100	2.0p☑	200m	175A	Si	DO35
108	GP199	100	2.0n☑	10m	6 0		1 0m∅	100			1 0m	69 △	05u	05m	150	20	2 0p☑	75m	175	Si#	DO35
109	HMG4308	100 ☑	2.0n	10m	6 0		1 0m∅				200m☑	1.0	.10u	10m	150	75	2.0p			Si	M208b
110	HMG4314	100 ☑	2 0n	10m	6 0		1 0m∅				200m☑	1.0	10u	.10m	150	75	2 0p			Si	M208b

SYMBOLS AND CODES EXPLAINED IN INTERPRETER

4. SWITCHING DIODES

IN ORDER OF (1) PIV, (2) RECOVERY TIME, and (3) TYPE No.

LINE No	TYPE No. [3]	PIV [1] (V)	RECOVERY TIME [2] Trr (s)	TEST CONDITIONS If (A)	Vr (V)	Zr (Ω)	Ir (A)	RL (Ω)	CKT	STORE TIME (s)	MIN. FORWARD CURRENT at 25°C IF (A)	at Vf (V)	MAX. REVERSE CURRENT Ir @25°C & Vr (A)	Ir at T & Vr (A)	TEMP T (°C)	TEST VOLT Vr (V)	CAP at ZERO VOLTS (F)	ABSOLUTE MAX RATING AVG. FWD I (A)	MAX. TEMP (°C)	DESCRIPTION MAT	DWG No.
1	HMG4317	100 ☑	2 0n	10m	6 0		1 0mØ				300m☑	1 0	10u	10m	150	75	2 0p			Si	M208b
2	HMG9001	100 ☑	2 0n	10m	6 0		1 0m	100			100m	1 0	25n	100u	150	20	3 0p	150m	200A	Si$	M208b
3	HMG9002	100 ☑	2 0n	10m	6 0		1 0m	100			30m	1 0	25n	100u	150	20	2 0p	150m	200A	Si$	M208b
4	MC7000	100 ☑	2.0n☑	10m	6 0		1 0m	100			200m	1 0 △	10u	.10m	150	50	2 0p☑		175A	Si	A2c
5	SCSDM1L	100	2 0n	500m			1 0				50	1 1 △	13u	500u	100A	100		50	150A	Si	M493
6	SCSDM1W	100	2 0n	500m			1 0				50	1 1 △	13u	500u	100A	100		50	150A	Si	M492
7	SCSM1	100	2 0n	500m			1 0				100	1 1 △	25u	1 0m	100A	100		100	150A	Si	S305☑
8	SCSNM1L	100	2 0n	500m			1 0				50	1 1 △	13u	500u	100A	100		50	150A	Si	M493
9	SCSNM1W	100	2 0n	500m			1 0				50	1 1 △	13u	500u	100A	100		50	150A	Si	M492
10	SCSPM1L	100	2 0n	500m			1 0				50	1 1 △	13u	500u	100A	100		50	150A	Si	M493
11	SCSPM1W	100	2 0n	500m			1 0				50	1 1 △	13u	500u	100A	100		50	150A	Si	M492
12	SP105	100	2.0n☑	10m	6 0		1 0mØ	100	§		100m	1 0	25n	50u	150	75	2 0p		175A	Si	DO7
13	1N3731	100 *	3 0n☑	10m	6 0		1 0mØ				100m	1 0	05u	05m	150	50	2 0p☑	175m	175A	Si	DO7
14	HMG3257	100 ☑	3 0n	10m	6 0		1 0mØ				30m	1 0	03u	.03m	150	25	2 0p			Si	M208b
15	HMG3731	100 ☑	3 0n	10m	6 0		1.0mØ				100m	1 0	05u	05m	150	50	2 0p			Si	M208b
16	ıı10A12	100	3 0n☑	500m	40		50m	3 0			1 0m	20	10u			50	35pØ	200m	175A	Si	M214a
17	ıı10A13	100	3 0n☑	500m	40		50m	3 0			1 0m	20	10u			50	35pØ	300m	175A	Si	M214a
18	ıı10A14	100	3 0n☑	500m	100		50m	3 0			1 0m	250m	10u			50	35pØ	400m	125	Si	M214a
19	ıı10A15	100	3 0n☑	500m	100		50m	3 0			1 0m	250m	10u			50	100p☑	500m	125	Si	M214a
20	ıı10A16	100	3 0n☑	500m	100		50m	3 0			1 0m	250m	10u			50	100p☑	600m	125	Si	M214a
21	ıı10A22	100	3 0n☑	500m	40		50m	3 0			1 0m	20	20u			50	35pØ	200m	175A	Si	M214a
22	ıı10A23	100	3 0n☑	500m	40		50m	3 0			1 0m	20	20u			50	35pØ	300m	175A	Si	M214a
23	ıı10A24	100	3 0n☑	500m	100		50m	3 0			1 0m	250m	20u			50	35pØ	400m	125	Si	M214a
24	ıı10A25	100	3.0n☑	500m	100		50m	3 0			1 0m	250m	20u			50	100p☑	500m	125	Si	M214a
25	ıı10A26	100	3 0n☑	500m	100		50m	3 0			1 0m	250m	20u			50	100p☑	600m	125	Si	M214a
26	ıı10A52	100	3 0n☑	500m	40		50m	3 0			1 0m	.20	50u			50	35pØ	200m	175A	Si	M214a
27	ıı10A53	100	3 0n☑	500m	40		50m	3 0			1 0m	20	50u			50	35pØ	300m	175A	Si	M214a
28	ıı10A54	100	3 0n☑	500m	100		50m	3 0			1 0m	250m	50u			50	35pØ	400m	125	Si	M214a
29	ıı10A55	100	3 0n☑	500m	100		50m	3 0			1 0m	250m	50u			50	100p☑	500m	125	Si	M214a
30	ıı10A56	100	3 0n☑	500m	100		50m	3 0			1 0m	250m	50u			50	100p☑	600m	125	Si	M214a
31	ıı10B12	100	3.0n☑	500m	40		50m	3 0			1 0m	27	10u			50	35pØ	200m	175A	Si	M214a
32	ıı10B13	100	3 0n☑	500m	40		50m	3 0			1 0m	27	10u			50	35pØ	300m	175A	Si	M214a
33	ıı10B14	100	3 0n☑	500m	100		50m	3 0			1 0m	325m	10u			50	35pØ	400m	150	Si	M214a
34	ıı10B15	100	3.0n☑	500m	100		50m	3 0			1 0m	325m	10u			50	100p☑	500m	150	Si	M214a
35	ıı10B16	100	3.0n☑	500m	100		50m	3 0			1 0m	325m	10u			50	100p☑	600m	150	Si	M214a
36	ıı10B22	100	3 0n☑	500m	40		50m	3 0			1 0m	27	20u			50	35pØ	200m	175A	Si	M214a
37	ıı10B23	100	3 0n☑	500m	40		50m	3 0			1 0m	27	20u			50	35pØ	300m	175A	Si	M214a
38	ıı10B24	100	3 0n☑	500m	100		50m	3 0			1 0m	325m	20u			50	35pØ	400m	150	Si	M214a
39	ıı10B25	100	3 0n☑	500m	100		50m	3 0			1 0m	325m	20u			50	100p☑	500m	150	Si	M214a
40	ıı10B26	100	3.0n☑	500m	100		50m	3 0			1 0m	325m	20u			50	100p☑	600m	150	Si	M214a
41	ıı10B52	100	3.0n☑	500m	40		50m	3 0			1 0m	27	50u			50	35pØ	200m	175A	Si	M214a
42	ıı10B53	100	3.0n☑	500m	40		50m	3 0			1 0m	27	50u			50	35pØ	300m	175A	Si	M214a
43	ıı10B54	100	3 0n☑	500m	100		50m	3 0			1 0m	325m	50u			50	35pØ	400m	150	Si	M214a
44	ıı10B55	100	3 0n☑	500m	100		50m	3 0			1 0m	325m	50u			50	100p☑	500m	150	Si	M214a
45	ıı10B56	100	3 0n☑	500m	100		50m	3 0			1 0m	325m	50u			50	100p☑	600m	150	Si	M214a
46	WG141	100	3.0n	10m	6 0		1 0m	100			100m	1 0 △		05u	25	50	2.0p			Si#	A1z
47	1N914	100 §	4.0n☑	10m	6 0		1 0mØ	100			10m	1 0	25n	50u	150	20	4 0p	75m	150A	Si△	DO7
48	1N916	100	4.0n☑	10m	6 0		1 0mØ	100			10m	1 0	25n	50u	150	20	2 0p☑	75m	150A	Si△	A60p
49	1N999	100	4.0n	10m	1 0						50m	1 0	1 0n	3 0u	150	75	2 0p☑			Si	DO7
50	1N3206	100	4.0n	10m	6 0		10m†	100			10m	1 0	03u	05m	150	20	4 0p☑		150A	Si	A2
51	JAN1N3206	100	4.0n☑	10m	6 0		1 0m†	100			10m$	1 0 △	25n	30u	150A	20	2 0p☑	50m	150A	Si	A2p
52	1N3653	100	4.0n	5 0m	6 5	6 5k					400m	1 0	25n	25u	100	75				Si	DO7
53	1N3654	100	4.0n	5 0m	6 5	6 5k					50m	1 0	25n	25u	100	75	4 0p			Si	DO7
54	1N5315	100 ☑	4 0n☑	10m			10m†				10m	71 △	05u	05m	150A	50	2 5p☑	200m	200A	Si	A1h
55	1N5316	100 ☑	4 0n☑	10m			10m†				10m	75 △	05u	05m	150A	50	2 0p☑	135m	200A	Si	A1h
56#	BAX96A	100 §	4 0n☑	10m	6 0		1 0mØ				10m	1 0	25n	50u	150	20	4 0p	75m	150A	Si	
57#	BAX96C	100 §	4 0n☑	10m	6 0		1 0mØ				10m	1 0	25n	50u	150	20	4 0p	75m	150A	Si	
58♦	C6311	100	4 0n☑	10m	6 0	100	1 0mØ				20m	1 0	25n			20	4 0p☑		175A	Si	M371d
59	CA69001A	100	4 0n	10m			10m†				1 0m☑		10u			50	4 0p		200A	Si	Z11
60	CA69002A	100	4 0n	10m			10m†				10m☑		10u			50	4 0p		200A	Si	Z11
61	CA69003A	100	4 0n	10m			10m†				10m☑		10u			50	4 0p		200A	Si	Z11
62	CA69004A	100	4 0n	10m			10m†				10m☑		.10u			50	4 0p		200A	Si	Z11
63	GSM914	100	4 0n☑	10m	6 0		1 0mØ	100			10m	1 0	25n	50u	150	20	4.0p☑		150	Si§	A2c
64#	HDS9001	100	4 0n☑	10m			10m				100m	1 0 △	25n	100u	150A	20	3 0p☑	75m	175A	Si#$	A1y
65	HMG914	100 ☑	4 0n☑	10m	6 0		1 0mØ				10m	1 0	25n	50u	150	20	4 0p			Si	M208b
66	HMG914A	100 ☑	4 0n☑	10m	6 0		1 0mØ				20m	1 0	25n	50u	150	20	4 0p			Si	M208b
67	HMG914B	100 ☑	4 0n☑	10m	6 0		1 0mØ				100m☑	1 0	25n	50u	150	20	4.0p			Si	M208b
68	HMG916	100 ☑	4 0n☑	10m	6 0		1 0mØ				10m	1 0	25n	50u	150	20	2 0p			Si	M208b
69	HMG916A	100 ☑	4 0n☑	10m	6 0		1 0mØ				20m	1 0	25n	50u	150	20	2.0p			Si	M208b
70	HMG916B	100 ☑	4 0n	10m	6 0		1 0mØ				30m	1 0	25n	50u	150	20	2 0p			Si	M208b
71	HMG3206	100 ☑	4 0n☑	10m	6 0		1 0mØ				10m	1 0	25n	50u	150	20	4 0p			Si	M208b
72	HMG3258	100 ☑	4 0n	10m	6 0		1 0mØ				100m	1 0	03u	03m	150	25	4 0p			Si	M208b
73	HMG4148	100 ☑	4 0n	10m	6 0		1 0mØ				10m	1 0	25n	50u	150	20	4 0p			Si	M208b
74	HMG4149	100 ☑	4 0n	10m	6 0		1 0mØ				10m	1 0	25n	50u	150	20	2 0p			Si	M208b
75	HMG4313	100 ☑	4 0n	10m	6 0		1 0mØ				100m☑	1 0	10u	10m	150	75	1 0p			Si	M208b
76	HMG4373	100 ☑	4 0n	10m	6 0		1 0mØ				10m	1 0	25n	50u	150	20	2 0p			Si	M208b
77#	HS9001	100	4 0n☑	10m			10m				100m	1 0 △	25n	100u	150A	20	3.0p☑	75m	175A	Si#$	DO7
78	MC914	100	4 0n	10m	6 0		1 0m	100			10m	1 0	25n	50u	150	20	4 0p☑		175A		A2c
79	MC914A	100	4 0n	10m	6 0		1 0m	100			20m	1 0	25n	50u	150	20	4 0p☑		175A		A2c
80	MC916	100	4 0n	10m	6 0		1 0m	100			10m	1 0	25n	50u	150	20	2 0p☑		175A		A2c
81	MC916A	100	4 0n	10m	6 0		1 0m	100			20m	1 0	25n	50u	150	20	2 0p☑		175A		A2c
82	MCPD523A	100	4 0n	10m	6 0		1 0m				20m	1 0	100n	25u	100	20	4.0p☑		150A	Si	M411
83	MCPD523B	100	4 0n	10m	6 0		1 0m				20m	1 0	100n	25u	100	20	4 0p☑		150A	Si	M411a
84	MCPD523C	100	4 0n	10m	6 0		1 0m				20m	1 0	100n	25u	100	20	4.0p☑		150A	Si	M277d
85	MD1D914	100 ☑	4 0n	10m	6 0		1 0m				10m	1 0	5.0u			75	4 0p☑	75m	150A	Si	TO122
86	MD1D914A	100 ☑	4 0n	10m	6 0		1 0m				20m	1 0	5.0u			75	4 0p☑	75m	150A	Si	TO122
87	MD1D914B	100 ☑	4.0n	10m	6 0		1 0m				100m	1 0	5.0u			75	4.0p☑	75m	150A	Si	TO122
88	MD2D914	100 ☑	4 0n	10m	6 0		1 0m				10m	1.0	5 0u			75	4.0p☑	75m	150A	Si	TO122
89	MD2D914A	100 ☑	4.0n	10m	6 0		1 0m				20m	1 0	5 0u			75	4 0p☑	75m	150A	Si	TO122
90	MD2D914B	100 ☑	4 0n	10m	6 0		1 0m				100m	1 0	5 0u			75	4 0p☑	75m	150A	Si	TO122
91	MHD613	100	4 0n☑	10m	6 0		1 0mØ	100			10m	1 0	25n	50u	150	20	2 0p☑	150	200	Si	A1e
92	MSD6100	100	4 0n☑	10m	5 0		10m	50					5 0u			100	1 5p☑		135	Si$	TO92
93	MT701	100	4 0n	10m	6 0		1 0m	100			100m	1 0	25n	50u	150	20	4 0p	200	175A	Si	A60e
94#	SFD182	100	4 0n	10	6 0			100			10m	1 0	200n				4 0p☑		175S	Si#	DO7
95	SG5000	100 ☑	4 0n	10m	6 0		1 0m	100			200m	1 0	25u	10m	150	75	2 0p☑	250m	175A	Si	DO7
96	SG5270	100 ☑	4 0n	10m	6 0		3 0mØ	100			100m	90	10u	10m	150	75	6 0p☑	200m	175A	Si$#	DO7
97	SG5300	100 ☑	4 0n	10m	6 0		1 0m	100			300m	1 0	25u	10m	150	75	2 0p☑	250m	175A	Si	DO7
98	JAN1N914	100	5 0n☑	10m			10m	100	△		10m	1 0 △	5 0u	10m	150	75	4 0p☑	75m	175A	Si△	A1db
99	JAN1N4148	100	5.0n☑	10m			10m	100	△		10m	1 0 △	5 0u	10m	150	75	4 0p☑	75m	175A	Si△	A1ap
100	JAN1N4531	100	5 0n☑	10m			10m	100	△		10m	1 0 △	5 0u	10m	150	75	4 0p☑	75m	175A	Si△	A1k
101	HMG3601	100 ☑	5 0n	10m	10		1.0mØ				10m	1 0	10u	10m	150	75	3 0p			Si	M208b
102	Q100-500	100	5 0n	10m	6 0	3 0K		120			50m	1 0	800u			100			75A	Ge*	DO7
103	Q100-500A	100	5 0n	10m	6 0	3 0K		120			10m	80	800u			100			75A	Ge*	DO7
104#	1S961	100	6 0n	100m			100m	100			100m	1 0	10u	10m	150		1 5p☑	150m	150	Si	DO7
105#	BAW47	100 ☑	6 0n☑	10m			10m	100			10m	1 0 △	100n	100u	125	75	4 0p☑	75m	150J	Si†	DO7
106	GSM56	100	6 0n☑	10m	6 0		1 0mØ	100			10m	1 0	500n	75u	150	20	6 0p☑		150	Si§	A2c
107▼#	BA209	100	8 0n☑	10m			10m	100			10m	1 0 △	25n	50u	150A	20	4 0p☑		175A	Si	DO35
108▼#	BA210	100	8 0n☑	10m			10m	100			10m	1 0 △	25n	50u	150A	20	2 0p☑		175A	Si	DO35
109▼#	BA211	100	8 0n☑	10m			10m	100			20m	1 0 △	25n	50u	150A	20	4 0p☑		175A	Si	DO35
110▼#	BA212	100	8 0n☑	10m			10m	100			20m	1 0 △	25n	50u	150A	20	2 0p☑		175A	Si	DO35

SYMBOLS AND CODES EXPLAINED IN INTERPRETER

4. SWITCHING DIODES

IN ORDER OF (1) PIV, (2) RECOVERY TIME, and (3) TYPE No.

LINE No	3 TYPE No	1 PIV (V)	RECOVERY TIME 2 Trr (s)	TEST CONDITIONS If (A)	Vr (V)	Zr (Ω)	Ir (A)	RL (Ω)	CKT	STORE TIME (s)	MIN. FORWARD CURRENT at 25°C IF (A)	at Vf (A)	MAX. REVERSE CURRENT Ir @25°C & Vr (A)	Ir at T & Vr (A)	TEMP T (°C)	TEST VOLT Vr (V)	CAP. at ZERO VOLTS (F)	ABSOLUTE MAX RATING AVG. FWD I (A)	MAX. TEMP (°C)	MAT.	DESCRIPTION DWG. No.
1▼#	BA213	100	8 0n∅	10m			10m	100			100m	1 0 △	25n	50u	150A	20	4.0p∅		175A	Si	DO35
2▼#	BA214	100	8.0n∅	10m			10m	100			30m	1 0 △	25n	50u	150A	20	2.0p∅		175A	Si	DO35
3	ıı10C14	100	9.0n∅	500m	100		50m	3 0			1 0	450m	10u			50	20p∅	400m	175	Si	M214a
4	ıı10C15	100	9.0n∅	500m	100		50m	3 0			1 0	450m	10u			50	20p∅	500m	175	Si	M214a
5	ıı10C16	100	9 0n∅	500m	100		50m	3 0			1 0	450m	10u			50	20p∅	600m	175	Si	M214a
6	ıı10C25	100	9 0n∅	500m	100		50m	3 0			1 0	450m	20u			50	20p∅	500m	175	Si	M214a
7	ıı10C26	100	9 0n∅	500m	100		50m	3.0			1 0	450m	20u			50	20p∅	600m	175	Si	M214a
8	ıı10C055	100	9.0n∅	500m	100		50m	3 0			1 0	450m	5 0u			50	20p∅	500m	175	Si	M214a
9	ıı10C056	100	9.0n∅	500m	100		50m	3 0			1.0	450m	5 0u			50	20p∅	600m	175	Si	M214a
10#	BAX83	100	10n	10m			10m†		*		10m	1.0	10u			20	3.0p*	75m	175A	Si	A60h
11	HD4102	100	10n	10m			1 0m				10m	1.0	100n	25u	100	50	4.0p			Si	DO7
12	HG1001	100	10n	10m	6.0		1.0m∅	100			20m	1.0		05m	25	50	.20p	45m	90J	Ge	DO7
13	HG1002	100	10n	10m	6.0		1 0m∅	100			20m	1.0		.10m	25	50	.20p	45m	90J	Ge	DO7
14	HG1003	100	10n	10m	6 0		1 0m∅	100			10m	1.0		05m	25	50	20p	45m	90J	Ge	DO7
15	HG1004	100	10n	10m	6 0		1 0m∅	100			10m	1.0		.10m	25	50	.20p	45m	90J	Ge	DO7
16	HG1005	100	10n	10m	6 0		1 0m∅	100			5 0m	1.0		.05m	25	50	20p	45m	90J	Ge	DO7
17	HG1006	100	10n	10m	6 0		1 0m∅	100			5.0m	1 0		10m	25	50	.20p	45m	90J	Ge	DO7
18#	TF6	100	10n	10m			10m†		*		10m	1 0	10u			20	3.0p*	75m	175A	Si	A60h
19#	TF36	100 ∅	10n∅	10m			10m†	100	∅		10m	1.0	06u			50	4.0p∅	75m	175A	Si	DO35
20	TID32	100 ∅	10n∅	200m			200m†	100			200m	1.0 △	.10u	.10m	150A	50	4 0p∅	150m	150A	Si$#	A1aq
21	TID34	100 ∅	10n∅	200m			200m†	100			150m	1.0 △	.10u	10m	150A	50	4.0p∅	150m	150A	Si$#	A1aq
22	TID36	100 ∅	10n∅	200m			200m†	100			100m	1.0 △	.10u	.10m	150A	50	4 0p∅	150m	150A	Si$#	A1aq
23	Q100-750	100	12n	1 6m	3 0						1 0m	1.0	100u			100			75A	Ge∅	DO7
24	Q100-950	100	15n	1 6m	3 0						1 0m	1.0	100u			100			75A	Ge∅	DO7
25▼	DSR1082	100	20n∅	1 0			1 0				500m	1.1 △	1.0u	75u	100	100		750m			A266
26	DSR3100	100	20n	1 0							3 0	1.1 △	3.0u					3.0			A266
27	DSR5100	100	20n	1 0							4 0	1 0 △	5.0u					5.0			A146n
28	DSR6100	100	20n	1 0							6 0	1 0 △	10u					10			S292
29	AM702A	100	30n∅	30m			1 0m△				200m	1 0	10u	.10m	150A	80	2.0p∅		175A	Si△	DO7
30	AM705A	100	30n∅	30m			1.0m△				100m	1.0	10u	.10m	150A	80	2.0p∅		175A	Si△	DO7
31	AM708A	100	30n∅	30m			1 0m△				50m	1.0	10u	10m	150A	80	2.0p∅		175A	Si△	DO7
32	AM711A	100	30n∅	30m			1.0m				10m	1.0	10u	.10m	150A	80	2 0p∅		175A	Si△	DO7
33	AM714A	100	30n∅	30m			1 0m				200m	1.0	.10u	.10m	150A	80	5 0p∅		175A	Si△	DO7
34	AM717A	100	30n∅	30m			1.0m				100m	1.0	10u	.10m	150A	80	5 0p∅		175A	Si△	DO7
35	AM720A	100	30n∅	30m			1.0m				50m	1 0	.10u	10m	150A	80	5 0p∅		175A	Si△	DO7
36	AM723A	100	30n∅	30m			1 0m				10m	1.0	10u	10m	150A	80	5 0p∅		175A	Si△	DO7
37	AM724A	100	30n	30m	3 0	3 0K					10m	1 0	10u	10m	150A	80				Si△	DO7
38	DSR2100	100	30n	1 0							3 0	1 2 △	10u					3.0			A266
39	TID44	100 ∅	30n∅	10m			10m	100			200m	1.0 △	.10u	.05m	150A	20	5.0p∅		150A	Si△	A60b
40#	BAW49	100 ∅	35n	30m			30m	100			20	1.0 △	100n	100u	125	75	5 0p∅	.22	150J	Si†	DO7
41#	ZS42	100	40n$∅	10m	5 5						10m	1.5 △	500n	25u	100A	100	2 5p∅†			Si#	C1aa
42#	ZS42F	100	40n$∅	10m	5 5						10m	1 5 △	500n	25u	100A	100	2 5p∅†			Si#	C29e
43	AM702	100	50n∅	30m			1 0m△				200m	1 0	.10u	.10m	150A	80	2 0p∅		175A	Si△	DO7
44	AM705	100	50n∅	30m			1 0m△				100m	1 0	10u	.10m	150A	80	2.0p∅		175A	Si△	DO7
45	AM708	100	50n∅	30m			1 0m△				50m	1 0	10u	10m	150A	80	2.0p∅		175A	Si△	DO7
46	AM711	100	50n∅	30m			1 0m				10m	1.0	10u	10m	150A	80	2.0p∅		175A	Si△	DO7
47	AM714	100	50n∅	30m			1 0m				200m	1.0	10u	.10m	150A	80	5.0p∅		175A	Si△	DO7
48	AM717	100	50n∅	30m			1 0m				100m	1 0	10u	.10m	150A	80	5.0p∅		175A	Si△	DO7
49	AM720	100	50n∅	30m			1 0m				50m	1 0	10u	.10m	150A	80	5.0p∅		175A	Si△	DO7
50	AM723	100	50n∅	30m			1 0m				10m	1 0	10u	10m	150A	80	5.0p∅		175A	Si△	DO7
51	AM724	100 †	50n	30m	3 0	3 0K					10m	1.0	.10u	.10m	150A	80				Si△	DO7
52	AM7200A	100	50n∅	30m			10m△				50m∅	1.0	10u	.10m	150	80	4.0p∅	100m	125A	Si	M117*
53	AM7205A	100	50n∅	30m			1 0m△				50m∅	1 0	10u	.10m	150	80	4.0p∅	100m	125A	Si	M118*
54#	BA137	100	50n∅								100m	1 0 △	.20u				5 0p∅			Si$#	DO7
55#	BAW58	100 ∅	50n∅	30m			30m	100			10	1 0 △	300n	30m	100	75	6.0p∅	55m	125J	Si†	
56▼	DSR1085	100	50n∅	1 0			1 0				100m	1.0 △	500n	25u	100	100		750m			A266
57▼	DSR3101	100	50n∅	1 0			1 0				2 0	1.1 △	2 0u	50u	100	100		2 0			A266
58▼	DSR5101	100	50n∅	1 0			1 0				4 0	1 1 △	5 0u	100u	100	100		4 0			A196f
59	PD2726B	100	70n	1 0	30		1 0				10	1 0 △	10u	15m	150A	100		15	175A	Si	DO4
60	PD9050B	100	70n	1 0	30		1 0				10	1.0 △	10u	10m	150A	100		15	175A	Si	M574
61	PD9767	100	70n															40			DO5
62▼	DSR5102	100	75n∅	1.0			1 0				3 0	1 1 △	5.0u	100u	100	100		4 0			A196f
63	PD2704	100	75n															40			DO5
64	UTX110	100	75n∅	10m			10m∅				1	1 0	3.0u	05m	100A	100		1	175A	Si	A146f
65	UTX210	100	75n∅	10m			10m∅				2	1 0	3.0u	.05m	100A	100		2	175A	Si	A146f
66	HFR10	100	80n∅	1			1				1	1 2	1.3u	.20m	100A	100	75p	1	175A	Si	A196a
67	1N663A	100	100n	5 0m	40	200K		2k			100m	1 0	10u	02m	100	75	8.0p∅	300m	150A	Si	A60p
68	1N4823	100 †	100n	1							1.0m	1 3		1 0m	50	100		1	170	Si	DO13
69♦	A28A	100 †	100n†	5 0			4 0				12	700m∅△		8 0m	135C	100		12	175J	Si△	DO4∅
70#	AAY28	100	100n	5 0m			50m				30m	1 9 △	250u	43m	60	100	20p*		90J	Ge	DO7
71	AM620	100	100n∅	40m			40m†				200m	1 0	.10u	10m	150A	80	4.0p∅	200m	175A	Si△	DO7
72	AM620A	100	100n∅	40m			40m†				200m	1.0	.10u	10m	150A	80	2.0p∅	200m	175A	Si△	DO7
73	AM626	100	100n∅	40m			40m†				100m	1.0	.10u	.10m	150A	80	4.0p∅	150m	175A	Si△	DO7
74	AM626A	10C	100n∅	40m			40m†				100m	1 0	.10u	10m	150A	80	2 0p∅	150m	175A	Si△	DO7
75	AM632	100	100n∅	40m			40m†				50m	1 0	.10u	.10m	150A	80	4.0p∅	150m	175A	Si△	DO7
76	AM632A	100	100n∅	40m			40m†				50m	1 0	.10u	10m	150A	80	2.0p∅	150m	175A	Si△	DO7
77	AM633	100	100n∅	40m			40m†				300m	1 0	.10u	10m	150A	80	2.0p∅		175A	Si△	DO7
78	AM635	100	100n∅	40m			40m†				300m	1.0	10u	10m	150A	80	4 0p∅		175A	Si△	DO7
79	AM635A	100	100n∅	40m			40m†				300m	1 0	10u	10m	150A	80	2.0p∅		175A	Si△	DO7
80#	BYX61-100	100	100n	1 0	3 0			1 0			12	1 4 △	25u	3 0m	100C	100		12	150J	Si△	DO4
81#	BYX65-100	100	100n	1 0	30			1 0			30	1 5 △	80u	10m	100C	100		30	150J	Si△	DO5
82▼	DSR1063	100	100n∅	1 0			1 0				500m	1 1 △	1.0u	50u	100	100		2.0			A266
83▼	DSR6101	100	100n∅	1 0			1 0				6 0	1 2 △	10u	250u	100	100		10			S292a
84	UTX3110	100	100n∅	1 0			1 0				2.0	1 0	5 0u	75u	100	100		3.0m	175	Si	
85	UTX4110	100	100n∅	1 0			1 0				3.0	1 0	5 0u	75u	100	100		4.0m	175	Si	
86	388B	100	120n								1 0	1 1 △		1 0m	125	100		1.0 §	150	Si	DO15
87	A114A	100	140n								1.0	1 1 △	5.0u	500u	125J	100			125J	Si	A94g
88	JAN1N5186	100	150n	500m			1 0				9 0	1 5 △	2.0u	100u	100	100	300p∅	3 0	175A	Si	A1dg
89	1N5416	100	150n∅	500m			1 0							2 0m	175A	100	175p∅		175A	Si	A248
90	JAN1N5416	100	150n	500m			1 0		△		3 0	1 3 △	1.0u	20u	100A	100	430p∅	2 0 §	200A	Si	A248a
91	RAB010	100	150n	500m			1 0				3.0	1 3	15u	300u	100	100		3.0 §	150A	Si	A1ez
92	RIB010	100	150n∅	50			1 0				3 0	1.3 △	15u	500u	100A	100		3 0	175J	Si	A1eu
93	RL010	100	150n	500m							1	1.3 △	2 0u	.10m	100	100		1	150A	Si	A3c
94	SCBR1F	100	150n	500m			1		△		1 0	1.3 △	20u△	.06m△	125A	100		1.5	150A	Si	
95	SCT1	100	150n∅	500m			1 ∅				1	1 3	1 0u	.03m	125	100	85p∅†		175J	Si	A1ch
96	1N3875	100 †	200n†	1	30		2				6	1.4		1.0m	100C	100		6	100C	Si	DO10
97	JAN1N3875	100	200n∅	1	30		2				6	1 4 △	15u	1.0m	100A	100		6 §	150C	Si	DO10
98	1N3880	100 †	200n†	1	30		2				6	1.4	15u	3.0m	100C	100		6	150C	Si△	DO4
99	JAN1N3880,R	100	200n∅	1	30		2				6	1 4 △	15u	1 0m	100A	100		6 §	150C	Si	DO4∅
100	1N3880R	100	200n∅	5 0	100		5 0				6 0	1.4 △	15u	1.0m	100C	100		6.0	150J	Si	DO4
101	1N3885	100	200n∅	1	30						12	1.4		3 0m	100	100			175S	Si	DO10
102	JAN1N3885	100 †	200n∅	1	30		2				38	1 5 △	25u	3 0m	100C	100		12 §	150C	Si	DO10
103	1N3890	100	200n†∅	1 0	30						12	1 4	25u	3.0m	100C	100		12	150C	Si	DO4∅
104	JAN1N3890,R	100 †	200n∅	1	30		2				38	1 5 △	25u	3 0m	100C	100		12 §	150C	Si	DO4
105	1N3900	100 †	200n†	1	30		3						50u	6.0m	100C	100		20m	150C	Si△	DO5
106	1N3905	100	200n∅	1	30						20	1 4		6 0m	100	100			175S	Si△	DO11
107	1N3910	100 †	200n†	1	30		3						80u	10m	100C	100		30m	150C	Si△	DO5
108	JAN1N3910,R	100	200n∅	1 0	30						95	1.4 △	80u	10m	100C	100		30 §	150A	Si	DO5
109	1N3915	100 †	200n∅	1	30						30	1 4		10m	100	100			175S	Si	DO11
110	1N4934	100	200n∅	1	30				△		1	1 2	5.0u	.10m	100	50		1	150	Si	A1az

SYMBOLS AND CODES EXPLAINED IN INTERPRETER

4. SWITCHING DIODES

IN ORDER OF (1) PIV, (2) RECOVERY TIME, and (3) TYPE No.

LINE No	TYPE No. [3]	PIV [1] (V)	RECOVERY TIME [2] Trr (s)	TEST CONDITIONS If (A)	Vr (V)	Zr (Ω)	Ir (A)	RL (Ω)	CKT	STORE TIME (s)	MIN. FORWARD CURRENT at 25°C IF (A)	at Vf (V)	MAX. REVERSE CURRENT Ir @25°C & Vr (A)	Ir at T & Vr (A)	TEMP T (°C)	TEST VOLT Vr (V)	CAP. at ZERO VOLTS (F)	ABSOLUTE MAX RATING AVG. FWD I (A)	MAX. TEMP (°C)	MAT.	DESCRIPTION DWG. No.
1#	CG80H	100	200n	10m	10	1 0K					100m	1 1		.50m	60	100	3 0p⊘			Ge⊘	A1bj
2#	MC22⊘	100	200n⊘	100m			100m†				400m	1 0	2 0u	.10m	100A	100	35p⊘	400m	150A	Si△	DO7
3#	MC46	100	200n⊘	100m			100m				250m	1.0 △	2.0u	100u	100A	100	35p⊘	250m	125A	Si△	DO7
4	MR831	100	200n⊘	1							3	1 1 △	50u	2.5m	100	100		3	150J	Si	A179a
5	PBR10	100	200n⊘	50			1 0				3 0	1 2 △	25u					15	125C	Si	*
6	SCSDF1L	100	200n	500m			1 0				50	1 2 △	13u	500u	100A	100		50	150A	Si	M493
7	SCSDF1W	100	200n	500m			1 0				50	1 2 △	13u	500u	100A	100		50	150A	Si	M492
8	SCSF1	100	200n	500m			1 0				100	1 2 △	25u	1 0m	100A	100		100	150A	Si	S305⊘
9	SCSNF1L	100	200n	500m			1.0				50	1 2 △	13u	500u	100A	100		50	150A	Si	M493
10	SCSNF1W	100	200n	500n			1 0				50	1 2 △	13u	500u	100A	100		50	150A	Si	M492
11	SCSPF1L	100	200n	500m			1 0				50	1 2 △	13u	500u	100A	100		50	150A	Si	M493
12	SCSPF1W	100	200n	500m			1 0				50	1.2 △	13u	500u	100A	100		50	150A	Si	M492
13#	SF1AN6	100 †	200n	6 0							6 0	1 0		2 0m	125B	100	6 0		150S	Si	DO4⊘
14#	SF1AN12	100 †	200n	10							10	1.0		2 0m	125B	100	10		150S	Si	DO4⊘
15#	SF1CN1	100 †	200n	1 0							1 0	1.2	10u	250u	125B	100		1 0	125B	Si	A31n
16	TFR110	100	200n⊘	1 0					†		1 0	1 2 △		1 0m	150	100		1 0m	175C	Si	Z34
17	TFR310	100	200n⊘	1 0					†		3 0	1 2 △		2 0m	150	100		3.0m	175C	Si	Z34
18	TFR610	100	200n⊘	1 0					†		6 0	1 2 △		3 0m	150	100		6 0	175C	Si	Z34
19	TFR1210	100	200n⊘	1 0					†		12	1 2 △		4 0m	150	100		12	175C	Si	Z34
20	VYA100X	100 †	200n⊘	1 0			2 0	30			10 $	1 2		5.0m	100C	100		25	150J	Si△	Z62*
21	VYB100X	100 †	200n⊘	1 0			2 0	30			10 $	1 2		5 0m	100C	100		25	150J	Si△	Z62*
22	VYC100X	100 †	200n⊘	1 0			2 0	30			10 $	1 2		5.0m	100C	100		25	150J	Si△	Z62*
23	VYD100X	100 †	200n⊘	1 0			2 0	30			10 $	1 2		5 0m	100C	100		25	150J	Si△	Z62*
24	VYE100X	100 †	200n⊘	1 0			2 0	30			10 $	1 2		5.0m	100C	100		13	150J	Si△	Z62*
25	VYF100X	100 †	200n⊘	1 0			2 0	30			10 $	1 2		5.0m	100C	100		13	150J	Si△	Z62*
26	VYG100X	100 †	200n⊘	1 0			2.0	30			10 $	1 2		5 0m	100C	100		13	150J	Si△	Z62*
27#	ZS132	100	200n	600m			600m	100			600m	1 7	5 0u	50u	100A	100	15p*⊘	250m	175A	Si	DO7
28▼	1N5186A	100	250n⊘	1 0			1 0				4 0	1.1 △	2 0u	80u	100	100	300p	4 0	175A	Si	A146p
29#	15P1	100	250n⊘	10m			1.0m				100m	1.0 △	20u	.15m	55	10		150m	85S	Ge	DO7
30	CB10F	100	250n	500m			1.0				750m	1.3 △	5 0u	150u	100	100		750m§	150A	Si	A1bg
31#	FR1001	100	250n⊘	100m			100m				1 0	1 3 △		200u	100A	100		1 0	150A	Si△	DO13
32	SLA5198HF	100	250n⊘	500m			1 0				3 0	1.0 △	5.0u	100u	100	100		3 0 §	175A	Si△	A31n
33	UTR10	100	250n⊘	10m			10m⊘				200m	1 1	3 0u	10m	100A	100	100p⊘	50m	175A	Si	A146f
34	UTR12	100	250n⊘	10m			10m⊘				1	1 1	3 0u	10m	100A	100	100p⊘	2	175A	Si	A146f
35	UTR2310	100	250n	1			1 ⊘				2	1.1	5 0u	.10m	150	100	400p	2	175	Si	A146m
36#	ZS151	100	250n	600m			100m						1 0n	1 0m	150	100	2 5p*	250m	200A	Si#$	DO7
37#	ZS153	100	250n	600m			100m							5 0m	150	100	2 5p*	250m	200A	Si#$	DO7
38#	ZS155	100	250n	600m			100m						10u	10m	150	100	2.5p*	250m	200A	Si#$	DO7
39	1N198B	100	300n	2 0m	6 0			2k	△		4 0m	1 0	50u	.05m	75	50		30m	90A	Ge⊘	DO7
40	1N276	100 #	300n	5 0m	40			2 0k	△		40m	1 0	20u	100u	75	10		60m	90S	Ge⊘	DO7
41	JAN1N276	100	300n⊘	5 0m	40			2 0k	△		40m	1 0 △	20u	100u	75A	10	700f*⊘	40m	75A	Ge	A1dd
42	JAN1N658	100	300n⊘	5 0m	40	80k		2 0k			100m	1 0 △	50n	25u	150A	50		200m	150A	Si	A1cz
43	1N658M	100	300n	5.0m	40	80k					100m	1 0	50n	25u	150	50				Si	A2
44	1N660	100	300n⊘	30m	35	400K							5 0u	.05m	100	100	2 7pt	100m	150A	Si△	A1
45	JAN1N660	100	300n⊘	30m	35	400K		2k			6.0m	1 0 △	5.0u	.05m	100C	100	2.7pt⊘	100m	150A	Si	A1
46	1N660A	100	300n⊘	30m	35	400K		2k	△		10m	1 0	03u	.05m	150	100	2.0pt	100m	150A	Si⊘	DO7
47	1N663M	100	300n	5 0m	40	200k					100m	1 0	100n	15u	100	75				Si	A2a
48	1N778	100	300n	5 0m	40	400K		2k	△		10m	1 0	50u	03m	125	40		50m	200A	Si	A1bz
49	1N806	100	300n	5.0m	40	400K		2k	△		4 0m	1.0	50u	05m	125	40	3 0p§⊘	30m	200A	Si	DO7
50	1N808	100	300n	30m	35	100K		500			100m	1.0	1 0u	50m	200A	35		100m	200A	Si	DO7
51	1N837A	100	300n⊘	30m	35	400K			△		150m	1.0	10u	.02m	100	80	3 5p	150m	175A	Si	A1bz
52	1N892	100	300n	30m	35	80K		2k			50m	1 0	10u	.03m	200A	40		200m	200A	Si	DO7
53	1N922	100	300n⊘	500m	50	10K		1k			50m	1 0	25u	.10m	150	90		250m	175A	Si	DO7
54#	2710	100	300n⊘	20m			2 0m			⊘	8 0m	1 8	100u				80p	2 5	150J	Si	S87e
55#	AG100	100	300n	10m			50m				60m	1.1	50u	100m	150	100	.40p			Si	DO7
56	HMG663A	100 ⊘	300n	5 0m	40	200K			△		100m	1 0	10u	.01m	100	75				Si	M208b
57	HMG837A	100 ⊘	300n	30m	35	400k			△		150m	1 0	100n	15u	100	80				Si	M208b
58	HMG899	100 ⊘	300n	5 0m	40	100K			△		5 0m	1 0	10u	.02m	100	80				Si	M208b
59	HMG900	100 ⊘	300n	5 0m	40	100K			△		50m	1.0	10u	.02m	100	80				Si	M208b
60	HMG901	100 ⊘	300n	5 0m	40	100K			△		100m	1 0	50u	.02m	100	80				Si	M208b
61	MC663A	100	300n	5 0m	40	200k					100m	1.0	100n	15u	100	75			175A		A2c
62	MC837A	100	300n	30m	35	400k					150m	1 0	100n	15u	100	80			175A		A2c
63	MD10△	100	300n	5 0m	40	100k		2 0k	△		20m	1 0	5 0n	5 0u	150	80		75m	150A	Si#	A2
64	PD031	100	300n	5 0m	40	100k					5 0m	1 0	500n	25u	100	10	2 0pt		150A		A2c
65	PD034	100	300n	5 0m	40	100k					20m	1 0	500n	25u	100	10	2 0pt		150A		A2c
66	PD128	100	300n	5 0m	40	80K			△		100m	1 0	05u	25m	150	50				Si	A2
67	PM031	100	300n	5 0m	40	100k					5 0m	1 0	500n	25u	100	10	2 0p		150A		M163
68	PM034	100	300n	5 0m	40	100k					20m	1 0	500n	25u	100	10	2 0p		150A		M163
69	PS722	100 †	300n⊘	5 0m	40	100K		2 3k	△		5.0m	1.0	5 0u	05m	100	75	3 0pt		150A	Si△	A60p
70	RS10	100	300n	1 0	30		3 0				6 0	1 4 △	15u	3 0m	100C	100		6 0	150C	Si	DO4
71	RT10	100	300n	1	30		1 4m				12	1 4 △	25u	5 0m	100C	100		12	150C	Si	DO4
72	RTC10	100	300n⊘	1 0	30		2 0				20	1 2 △	25u					40	175C	Si	M446*⊘
73	TMD25	100	300n⊘	5 0m	40		10m⊘				20m	85	50u	03m	100	100	4 0pt	50m	150A	Si△	A2
74	UTR4410	100	300n⊘	1			1		△		4 0m	1 1	10u	30m	100	100		6.0m	175A	Si	S277⊘
75	UTR5410	100	300n⊘	1			1		△		5 0m	1.1	10u	30m	100	100		7 5m	175A	Si	S277⊘
76	UTR6410	100	300n⊘	1			1		△		6 0m	1.1	10u	30m	100	100		9 0m	175A	Si	S277⊘
77	WA200	100	300n	30m	35	200k			△		400m	1 0	100n	15u	100	75				Si	DO7
78	1N933	100 *	400n⊘	5 0m	40	80k			△		4.0m	1.0	10u	75u	75A	10				Ge⊘	DO7
79	JAN1N933	100	400n⊘	5 0m	40	80k		2 0k			4 0m	1 0	10u	75u	75A	10	1 0p⊘	30m	75A	Ge⊘	A1dd
80	1N662	100 *	500n⊘	5 0m	40	100k		2 3k			10m	1 0	1 0u	100u	100	50	3 0pt	40m	150A	Si△	A1
81	JAN1N662	100	500n⊘	5.0m			18m	2 3k			10m	1.0	1 0u	100u	100	10		40m	150A	Si	A1
82	1N662A	100	500n	5.0m	40	100K			⊘		100m	1.0								Si	A1bz
83	1N663	100 *	500n⊘	5 0m	40	200k		2 3k			100m	1.0	5 0u	50u	100	75	3.0pt		150A	Si△	A1
84	JAN1N663	100	500n⊘	5 0m			18m	2 3k			10m	1.0	1.0u	500u	100	10		100m	150A	Si	A1
85	1N837	100	500n	30m	35	400K					150m	1.0								Si	A1bz
86	1N844	100	500n	30m	35	400k			△		200m	1 0	100n	15u	100	80				Si	A1bz
87	DR402	100 *	500n	30m	35	50k			⊘		20m	5.0		250u	55	50				Ge⊘	DO7
88	HMG662	100 ⊘	500n	5 0m	40	100K			△		10m	1 0	20u	10m	100	50	3.0pt			Si	M208b
89	HMG662A	100 ⊘	500n	5 0m	40	100K			△		100m	1 0	1.0u	.02m	100	10				Si	M208b
90	HMG663	100 ⊘	500n	5.0m	40	200K			△		100m	1 0	5 0u	.05m	100	75				Si	M208b
91	HMG844	100 ⊘	500n	30m	35	400k			△		200m	1 0	100n	15u	100	80				Si	M208b
92	MC662	100	500n	5 0m	40	100K					10m	1.0	1 0u	02m	100	10			175A		A2c
93	MC662A	100	500n	5 0m	40	100K					100m	1 0	1 0u	.02m	100	10			175A		A2c
94	MC663	100	500n	5 0m	40	200K					100m	1.0	5 0u	.05m	100	75			175A		A2c
95	MC837	100	500n	30m	35	400k					150m	1.0	100n	15u	100	75			175A		A2c
96	MC844	100	500n	30m	35	400k					200m	1.0	100n	15u	100	80			175A		A2c
97	PD126	100	500n	5 0m	40	100K		2k	△		10m	1 0	20u	.10m	100	50	2 0pt	30m	150A	Si	A2
98#	RPX100	100	500n⊘	1 0	30						1 0	1.5 △	3 0u					1 0	150A		A31a
99#	1S1218	100	750n⊘	2 0m			200u		⊘		200m	1.0	100u			50	500m§	100m	90A	Ge⊘	A1bw
100	AM301	100	750n⊘	5 0m	40	100k			△		200m	1 0	3.0n	3 0u	150A	80	6 0p⊘			Si△	DO7
101	AM304	100	750n⊘	5 0m	40	100k			△		100m	1 0	3.0n	3 0u	150A	80	6 0p⊘			Si△	DO7
102	AM307	100	750n⊘	5 0m	40	100k			△		50m	1.0	3 0n	3.0u	150A	80	6 0p⊘			Si△	DO7
103	1N692	100 †	800n	500m	50	10K		1k			400m	1.0	.25u	05m	150	90	12pt		175A	Si	DO7
104	1N627	100 ⊘	1 0u	30m	35	400K			⊘		4 0m	1 5	1 0u	03m	100	20		20m	150A	Si	A1bz
105	HMG627	100 ⊘	1 0u	30m	35	400K			△		4 0m	1.5	1 0u	.03m	100	75				Si	M208b
106#	MR11	100	1 0u	100m			100m				30m	1 0 △	2 0u				35p⊘	30m	125A	Si△	DO7
107	SCBR1M	100	1 0u	500m			1		△		1 0	1 3 △	20u△	06m△	125A	100		1 5	150A	Si	
108	1N3958C	100	1 5u	10										400u	150A	100			165A	Si	DO4
109#	2303	100	1 5u⊘⊘	30m	35	400K			⊘		1	1 5	5 0u			60			150J	Si*	A134
110▼	G1B	100	2 0u	500m			1 0				1 0	1 0 △	2 0u	100u	100J	100	14p	1 0 §	175A		A94j

SYMBOLS AND CODES EXPLAINED IN INTERPRETER

4. SWITCHING DIODES

IN ORDER OF (1) PIV, (2) RECOVERY TIME, and (3) TYPE No.

LINE No.	3 TYPE No	1 PIV (V)	RECOVERY TIME 2 Trr (s)	TEST CONDITIONS If (A)	Vr (V)	Zr (Ω)	Ir (A)	RL (Ω)	CKT	STORE TIME (s)	MIN FORWARD CURRENT at 25°C IF (A)	at Vf (V)	MAX. REVERSE CURRENT Ir @25°C & Vr (A)	Ir at T & Vr (A)	TEMP T (°C)	TEST VOLT Vr (V)	CAP. at ZERO VOLTS (F)	ABSOLUTE MAX RATING AVG. FWD I (A)	MAX. TEMP (°C)	DESCRIPTION MAT.	DWG. No.
1▼	G2B	100	2 0u	500m			1 0				2 0	1 2 △	500n	10u	100J	100	14p	2 0 §	175A		A94j
2#	2410	100	2 5u∅☑	30m	5 0	50K			∅		100m	1 5	5 0u			100			150J	Si*	A134
3	A15A	100	2.5u								3.0	1 0 △	5 0u	300u	175J	100		3 0	70A	Si	A249
4	1N3958	100	3 0u☑	10	50	250K	900m				1 2m	50		40m	150	100		3 5	165B	Si	DO4
5▼	G3B	100	3 0u	500m			1 0				3 0	1 0 △	2.0u	100u	100J	100	3 0p	3 0 §	175A		A94m
6#	F100	100	4 0u☑	20m			2 0m		☑		300m	1.2 △	1 0u		25A	100		300m§	125A	Si	DO29
7#	SF1GR315	100	4 5u†	250			25m				250	775m∅		25m		100				Si△	M522
8#	SF1HR315	100	4 5u†	250			25m				250	775m∅		25m		100				Si△	M523
9#	1SB10	100	5 0u								1 0	2.5 △		500u	100J	100		1 0 §	150S		M562
10#	2611	100	5 0u☑	20m			2 0m		☑		15	1 8	10u			100	100p	5.0	150J	Si	S87e
11#	DK15	100	7 0u#	10m	10						100m	1 0	100u			100	50p*	120m	75S	Ge	DO7
12#	MSR10	100	20u	20m			1 0m		☑		1 0	1 2 △		5.0u		100	30p	1 5 §	150A	Si	DO27
13#	PL4002	100 †	20u	20m			1 0m		☑		1 0	1 2 △	5 0u			100	30p	1 5 §	150A	Si△	DO27
14	ıı10C24	100	9 0m∅	500m	100		50m	3 0			1 0	450m	20u			50	20p∅	400m	175	Si	M214a
15	ıı10C054	100	9.0m∅	500m	100		50m	3 0			1 0	450m	5 0u			50	20p∅	400m	175	Si	M214a
16#	1S955	100	3 0 ☑	10m	6 0			100	☑		150m	1 0	100n			75	3.0 ☑	200m	200A	Si$#	A60g
17	MC51☑	100	4 0 ☑	10m	6 0		1 0m	100			10m	1 0	25n	50u	150	20	4 0p☑			Si	M409
18	1N699	105	300n☑	5.0m	50		.80m∅	2k	∅		100m	1.0		25m	70	75		30m	85A	Ge†	DO7
19	Q110-500	110	10n	10m	6 0	3 0K		120			50m	1 0	100u			110			75A	Ge∅	DO7
20	MB202	110	20n	10m			10m				1 6	1 0	50u	10m	100	90	25p		175A	Si	A60f
21	MB209	110	20n	10m			10m				1.2	1 0	1 0u	.20m	100	90	25p		175A	Si	A60f
22	MB215	110	200n	5 0m	40	100k					1.2	1 3 △	1 0u	100u	100	90	10p	1 5	175A	Si	A60f
23	MB222	110	200n	5 0m	40	100k					850m	1 3 △	3.0u	500u	100	90	10p	1 5	175A	Si	A60f
24	MT201	110	200n	5 0m	40	250k		100k			500m	1 0	1.0u	100m	100A	90	6.0p				A60e
25	MT208	110	200n	5 0m	40	250k		100k			250m	1 0	3 0u	500m	100A	90	6 0p				A60e
26	MC806	110	300n	5 0m	40	400K					4 0m	1.0	50u	.05m	100	100			175A		A2c
27	MC808	110	300n	5 0m	40	100K					100m	1.0	1 0u	05m	100	100			175A		A2c
28	T15△	110 *	300n	5 0m	40	25K					125m	1.0								Ge∅	A9k
29	PS704	110 #	500n	5 0m	40	100K			△		50m	1 0	5.0u	05m	100A	75				Si△	DO14
30	PS705	110 #	500n	5 0m	40	100K			△		50m	1.0	5 0u	.05m	100A	75				Si△	DO14
31	1N4318	120 †	2 0n	10m	6 0		1 0m∅	100			.25m	53	10u	.10m	150	100	2.0p☑		200	Si	A94a
32#	X6F951	120 ☑	2.0n*☑							400n							3 0p§			Si	F27d△
33#	SX782	120	25n#	10m	20			1k			10m	1 5	10u	10m	100	120	5.0p☑	75m	150S	Si*	C6
34	1N4363	120 †	40n☑	10m			10m†	100			200m	1 0	10u	10m	150	120	3 0p☑	100m	175S	Si	DO7
35	JAN1N2146	120	50n☑	500m			500m				500m	1.1	1.0u			50	45p☑	1 0m	175A	Si	A154
36	PD2710	120	50n															12			DO4
37#	BAY80	120 $	60n☑	30m			30m	75			150m	1 0 △	100n	150u	100	120	6.0p☑	100m	175A	Si	A1ap
38	1N697	120 ☑	100n☑	100m			100m†		∅		400m	1.1	2 0u			50	25p☑			Si	DO14
39	JAN1N697	120	100n☑	100m			100m				400m	1.1 △	2 0u	4.0m	150	100	25p☑		150A	Si	A1da
40	1N928	120	150n☑	5 0m	10		10m	1k			10m	1.0	10u	.01m	100	10	4 0p☑	120m	150A	Si△	A60p
41	PS7270	120	150n	5 0m	10	20K			△		5.0m	1 0	1 0u			10				Si△	DO14
42	DR999	120 *	200n	5 0m	40	1 0K			△		100m	1.0	05u			50				Si	DO7
43	1N798	120 †	250n	5 0m	40	200K			△		10m	1.0	5 0u	.03m	100	100				Si	A60p
44	1N5186	120	250n☑	1			1				3	1 1 △	5 0u	.10m	100A	100	400p	3	175A	Si	A146e
45	1N5320	120	250n☑	10m			10m				1	1.1 △	50u	.10m	100A	100		1	175A	Si	A146d
46▼	C6252	120	250n☑	10m			10m†				400m	1.0	1.0u	100u	100	100			175A	Si	M371
47	MC798	120	250n	5 0m	40	200K					10m	1.0	5 0u	03m	100	100			175A		A2c
48	1N658	120 *	300n	5 0m	40	80K		2k	△		100m	1 0	05u	.03m	150	40		200m	200A	Si	DO7
49	1N658A	120	300n	5 0m	40	80K		2k			100m	1 0	03u	.01m	150	50	5.0p☑	200m	175A	Si	DO7
50	1N841	120	300n☑	30m	35	400K			△		150m	1 0	10u	02m	100	120	3.5p	150m	175A	Si	A1bz
51	1N5608	120	300n☑	5 0m	40			80k			100m	1.0 △	50n	25u	150C	50			200C	Si	DO35
52	1N5609	120	300n☑	30m	35			400k			6 0m	1.0 △	5.0u	50u	100C	100	2 7p☑		200C	Si	DO35
53	DR661	120 *	300n	5 0m	40	80K			△		300m	1 0	05u	.01m	100	80				Si	DO7
54	MC658	120	300n	5 0m	40	80k					10m	1 0	50n	25u	150	50			175A		A2c
55	MC658A	120	300n	5 0m	40	80k					10m	1 0	25n	5 0u	150	50			175A		A2c
56	MC660	120	300n	30m	35	400K					6 0m	1.0	5.0u	.05m	100	100			175A		A2c
57	MC660A	120	300n	30m	35	400k					10m	1 0	25n	5.0u	150	100			175A		A2c
58	MC892	120	300n	5 0m	40	80k					50m	1 0	100n	25u	150	100			175A		A2c
59	1N797	120 †	500n	5 0m	40	200K			△		10m	1 0	1 0u	03m	100	100				Si	A60p
60	1N799	120 †	500n	5.0m	40	200K			△		50m	1.0	5.0u	.03m	100	100				Si	A60p
61	1N800	120 †	500n	5 0m	40	100K			△		100m	1.0	5 0u	03m	100	100				Si	A60p
62	MC797	120	500n	5 0m	40	200K					10m	1.0	1 0u	.03m	100	100			175A		A2c
63	MC799	120	500n	5 0m	40	200K					50m	1.0	5 0u	03m	100	100			175A		A2c
64	MC800	120	500n	5 0m	40	100K					100m	1 0	5 0u	03m	100	100			175A		A2c
65	DR673	120 *	1 0u	30m	35	400K			∅		100m	1 0	.50u	01m	100	75				Si	DO7
66#	SX642	120	2 0u☑								100m	1 5	500n	5.0u	100	120	5 0p†	280m	150A	Si*	C6
67	1N4864	125 ☑	4 0n☑	10m	6 0			100			100m	1 1 △	100n	100u	150A	80	1.3p☑		200S	Si	DO35
68#	1S2099	125	4 0n☑	10m	6 0			100			50m	1.2	1 0u			100	3 0p☑	50m	175J	Si	A60g
69	WG140	125	4 0n	10m	6 0		1.0m	100			150m	1.0 △		05u	25	75	4.0p			Si#	A1z
70#	1S1305	125	20n☑	100m	11		☑	50			500m	1 0 △	20u			120	12p☑	900m	175S	Si$#	A256
71#	BAY72	125 ☑	50n☑	30m			30m				100m	1.0	10u	.10m	125	100	5 0p☑	225m	175A	Si#	DO7
72	MC1546	125	50n								1 5	1 3 △	.30u	.04m	100	80	100p		200S	Si	A1r
73	FD222	125	60n☑	10m			10m	100			10m	650m	50n	10u	100	100	6.0p☑	100m	150A	Si#	A1ce
74	MMC1201	125 †	75n	1			500m△				1 ☑	83	1 0u	2.0m	150	100	100p*☑		200S	Si	A1q
75	MMC1202	125 †	75n	1			500m△				1 ☑	86	1.0u	2.0m	150	100	100p*☑		200S	Si	A1q
76	MMC1203	125 †	75n	1			500m△				1 ☑	93	1.0u	2 0m	150	100	100p*☑		200S	Si	A1q
77	MMC1204	125 †	75n	1			500m△				1 5 ☑	1 0	1.0u	2 0m	150	100	100p*☑		200S	Si	A1q
78	1N251A	125 ☑	150n	5 0m	10		50m∅	1k	△		10m	1.0	10u	05m	125	10		100m	150A	Si	DO7
79	1N252A	125 ☑	150n	5.0m	10		30m∅	1k	△		10m	1 0	10u	05m	125	10		100m	150A	Si	DO7
80	JAN1N3595	125	300n	10m	35						200m☑	1 0	1.0n	5 0u	125	125	8.0p☑	150m	150A	Si	DO7
81	CSD2313	125	300n	5 0m	40	400K		2k	△		5 0m	1.5	.25u	20m	100	125				Si	DO7
82	MC778	125	300n	5 0m	40	400K					10m	1 0	50u	.03m	125	100			175A		A2c
83	T15G	125	300n	5 0m	40	500K					125m	1 0						80m	90A	Ge∅	A1
84	1N628A	125	500n	30m	35	400K					10m	1 5	10u	.03m	150	125				Si	DO7
85	CSD2342	125	500n	30m	35	400K			∅		100m	1 5	20u	30m	100	125				Si	DO7
86	1N3864	125	900n	40m	40	400k					50m	1 1	1 0n	3 0u	150	125	5 0p☑			Si	DO7
87	CSD2310	125	1 0u	5 0m	40	400K		2k	△		5.0m	1 5	.25u	20m	100	125				Si	DO7
88#	BAW43	125	3.0u	10m	35			1 0k			200m	1.0	1 0n	500n	125	125	10p	300m	175A	Si	DO7
89	1N923	130	300n☑	500m	50	10K		1k			50m	1.0	25u	10m	150	120		150m	175A	Si	DO7
90	SG212	130	300n☑	5.0m	40			2k	△		5.0m	1.5	.25u	02m	100	125	2 0p	30m	150A	Si	A1
91	SG222	130	500n☑	20m	40			2k	△		30m	1.5	25u	.02m	100	125	2 0p	55m	150A	Si	A1
92	1N693	130 †	800n	500m	50	10K					400m	1.0	.25u	.05m	150	120				Si	DO7
93	MB203	140	20n	10m			10m				1 6	1.0	.50u	10m	100	110	25p		175A	Si	A60f
94	MB210	140	20n	10m			10m				1 2	1 0	1.0u	.20m	100	110	25p		175A	Si	A60f
95	DR688	140 *	200n	5.0m	40	100K			△		100m	1 0		.05m	125	100				Si	DO7
96	DR521	140	300n	5 0m	40	80k			△		100m	1 0	50n	25u	100	100				Si	DO7
97	1N433	145	3 0n	30m	35	40K		2k	△		3 0m	1.0		7 0m	150	10	1 3p	45m	150A	Si∅	C3e
98	1N433A	145	3 0n	30m	35	40K		2k	△		10m	1.0		7 0m	150	10	1.5p	50m	150A	Si∅	C3e
99	1N433B	145	3 0n	30m	35	40K		2k	△		50m	1 0		7.0m	150	10	1.5p	60m	150A	Si∅	C3e
100	1N4312	150 ☑	2 0n	10m	6 0		1 0m∅	100			25m	53	.10u	10m	150A	100	2.0p☑	250m	175A	Si$#	DO7
101	MC1512	150 ☑	2.0n☑	10m	6 0		1 0m∅				10m	2 0	.10u	.10m	150	100	1 0p☑		200S	Si	TO18
102	MC1511	150 ☑	4 0n☑	10m	6 0		1 0m∅				5 0m	1.5	.10u	10m	150	100	2 0p☑		200S	Si	TO18
103	SG5400	150 ☑	4 0n	10m	6 0		1 0m	100			200m	1 0	.25u	.10m	150	100	2.0p☑	250m	175A	Si	DO7
104	DSR1315	150	10n	10							100m	1 0 △	500n					1.0			A266
105#	ZS134	150	10n∅	10m	10					10n☑	30m	1 3 △	0 1u	12m	100	150	25p☑	250m	175A	Si	DO7
106	DSR3150	150	20n	1 0							3.0	1.1 △	3.0u					3 0			A266
107	DSR5150	150	20n	1 0							4.0	1 0 △	5.0u					5 0			A146n
108	DSR6150	150	20n	1 0							6.0	1.0 △	10u					10			S292
109	DSR1115	150	30n	10							100m	1 0 △	500n					1.0			A266
110	DSR2150	150	30n	1 0							3 0	1 2 △	10u					3 0			A266

SYMBOLS AND CODES EXPLAINED IN INTERPRETER

4. SWITCHING DIODES

IN ORDER OF (1) PIV, (2) RECOVERY TIME, and (3) TYPE No.

LINE No.	3 TYPE No.	1 PIV (V)	2 RECOVERY TIME Trr (s)	TEST CONDITIONS If (A)	Vr (V)	Zr (Ω)	Ir (A)	RL (Ω)	CKT	STORE TIME (s)	MIN. FORWARD CURRENT at 25°C IF (A)	at Vf (V)	MAX. REVERSE CURRENT Ir @25°C & Vr (A)	Ir at T & Vr (A)	TEMP T (°C)	TEST VOLT Vr (V)	CAP. at ZERO VOLTS (F)	ABSOLUTE MAX RATING AVG. FWD I (A)	MAX. TEMP (°C)	MAT.	DESCRIPTION DWG. No.
1	TID42	150 ∅	30n∅	10m			10m	100			100m	1.0 Δ	.10u	.05m	150A	20	5.0p∅		150A	SiΔ	A60b
2	TID43	150 ∅	30n∅	10m			10m	100			150m	1.0 Δ	.10u	.05m	150A	20	5.0p∅		150A	SiΔ	A60b
3	1N3599	150	50n	30m	150						100m	1.0	.10u	.10m	150	150	5.0p∅			Si	A60d
4#	BA196	150	50n∅	10m			10m	100			50m	1.0 Δ	20u			100	1.5p∅	75m	200S	Si	A1ap
5#	BAY98	150	50n	30m			30mt				150m	1.0	.20u		150		4.0p∅	115m	175A	Si	DO35
6▼	DSR1086	150	50n∅	1.0			1.0				100m	1.0 Δ	500n	25u	100	150		750m			A266
7▼	DSR3151	150	50n∅	1.0			1.0				2.0	1 1 Δ	2.0u	50u	100	150		2.0			A266
8	FD200	150 $	50n	30m			30m	100	Δ		100m	1.0	.10u	.10m	150	150	5.0p∅	100m	150A	Si#	DO7
9	MC1513	150 ∅	50n∅	30m	30		1.0m∅				5.0m	1.5	.03u	.03m	150	120	2.5p∅		200S	Si	TO18
10#	TF200	150 $	50n	30m			30m	100	Δ		100m	1.0	.10u	.10m	150	150	5.0p∅	100m	150A	Si	DO35
11	A13	150	70n	30m	3.0		1.0m	100			200m	1.5 Δ	25n	25u	150	50	10p∅	200m	200J	SiΔ	A134b
12#	BAX16	150	70n	30m	2.3		1.0m	75			200m	1.9 Δ	25n	25u	150	50	10p∅		200J	SiΔ	A134c
13	PD2726C	150	70n	1.0	30		1 0				10	1.0 Δ	10u	15m	150A	150		15	175A	Si	DO4
14	PD9050C	150	70n	1.0	30		1.0				10	1.0 Δ	10u	10m	150A	150		15	175A	Si	M574
15	NPC86	150	75n	30m			30mt	100			50m	1.0	10u			150	6.0p	100m	200A	Si	DO7
16#	SFD86	150 †	75n∅	30m			30mt	100			50m	1.0	10u			150	6 0p∅	100m	200S	Si#$	DO7
17	UTX115	150	75n∅	10m			10m∅				1	1.0	3.0u	.05m	100A	150		1	175A	Si	A146f
18	UTX215	150	75n∅	10m			10m∅				2	1.0	3.0u	.05m	100A	150		2	175A	Si	A146f
19	HFR15	150	80n∅	1			1				1	1 2	1.3u	.20m	100A	150	60p	1	175A	Si	A196a
20▼	DSR6151	150	100n∅	1 0			1 0				6.0	1.2 Δ	10u	250u	100	150		10			S292a
21	UTR511	150	100n∅	10m			10m				150m	1.1	1.0u	.10m	100	150		600m	175A	Si	A146g
22	UTX3115	150	100n∅	1 0			1.0				2.0	1.0	5.0u	75u	100	150		3.0m	175	Si	
23	UTX4115	150	100n∅	1.0			1.0				3 0	1 0	5 0u	75u	100	150		4.0m	175	Si	
24	388C	150	120n								1.0	1.1 Δ		1 0m	125	150		1.0 §	15D	Si	DO15
25#	BAX16A	150	120n∅	30m	3.0						1.0m	650mΔ	25n	25u	150J	50	10p∅	200m	200J	Si	DO35
26	387C	150 †	200nt	1	30		3							6.0m	100C	150		20m	150J	SiΔ	DO5
27	389C	150 †	200nt	1	30		3							10m	100C	150		35m	150C	SiΔ	DO5
28	478C	150 †	200nt	1	30		2				6	1.1		10m	150C	150		6	175J	SiΔ	DO4
29	479C	150 †	200nt	1	30		2				12	1.4		10m	150C	150		12	150C	SiΔ	DO4
30#	GR1	150	200n∅	1 0	30						4.0	1.4 ΔØ	15u	200u				4.0	125C	SiΔ	DO4
31	1N919	150 †	300n	5.0m	40		500uØ	2 0k	Δ		100m	1.0	500n	25u	100	150		100m		Si	A1cz
32	1N3597	150	300n	500m	50	1.0K					400m	1.2	.10u	.10m	150	150	5 0p∅			Si	DO7
33	MC841	150	300n	30m	35	400k					150m	1 0	100n	15u	100	120			175A		A2c
34	PS724	150 †	300n∅	5 0m	40	100K		2.3k	Δ		4.0m	1.0	20u	10m	100	125	3.0pt		150A	SiΔ	A60p
35	WA300	150	300n	30m	35	200k			Δ		400m	1.0	100n	15u	100	135				Si	DO7
36#	AG150	150	400n	10m			.50m				60m	1.1	.50u	100m	150	150	.40p			Si	DO7
37	1N801	150	500n	5.0m	40	200K			Δ		10m	1.0	1.0u	.03m	100A	125				SiΔ	A60p
38	1N802	150	500n	5.0m	40	200K			Δ		50m	1.0	5.0u	.05m	100A	125				SiΔ	A60p
39	1N838	150	500n	30m	35	400K					150m	1.0								Si	A1bz
40	1N3625	150	500nt	5.0m	40		500ut	200	Δ		40m	1.0	500n	25u	100	200		150m	150	Si	DO7
41	MC801	150	500n	5.0m	40	200K					10m	1 0	1.0u	03m	100	125			175A		A2c
42	MC802	150	500n	5.0m	40	200K					50m	1.0	5.0u	.05m	100	125			175A		A2c
43	MC838	150	500n	30m	35	400k					150m	1.0	100n	15u	100	125			175A		A2c
44	AM300	150	750n∅	5.0m	40	100k			Δ		200m	1.0	3.0n	3.0u	150A	125	6.0p∅			SiΔ	DO7
45	AM303	150	750n∅	5.0m	40	100k			Δ		100m	1.0	3.0n	3.0u	150A	125	6.0p∅			SiΔ	DO7
46	AM306	150	750n∅	5.0m	40	100k			Δ		50m	1.0	3.0n	3.0u	150A	125	6.0p∅			SiΔ	DO7
47	1N3223	150	800n	30m	35	400K		2k	Ø		4.0m	1.5	20u	.10m	100	125	2.5pt		150S	Si	DO7
48	1N628	150 ∅	1.0u	30m	35	400K			Ø		4.0m	1.5	1.0u	03m	100	20		20m	150A	Si	A1bz
49	SG217	150	1.0u	5.0m	40			2k	Δ		5.0m	1.5	25u	.02m	100	125	2.0p	30m	150A	Si	A1
50	SG227	150	1 0u	20m	40			2k	Δ		100m	1.5	.25u	.02m	100	125	2 0p	80m	150A	Si	A1
51#	BA115	150 $	1.8u∅#	10m	10	1.0K					10m	3.0	.50u	02m	70A	100	5.0p∅Δ	2 0m	150J	SiØ	DO7
52#	2415	150 §	2.5u∅∅	30m	5 0	50K			Ø		100m	1.5	5.0u			150			150J	Si*	A134
53	1N842	160	300n∅	30m	35	400K			Δ		150m	1.0	.10u	.02m	100	160	3 5p	150m	175A	Si	A1bz
54	MB204	165	20n	10m			10m				1.6	1.0	50u	.10m	100	135	25p		175A	Si	A60f
55	MB211	165	20n	10m			10m				1.2	1.0	1.0u	.20m	100	135	25p		175A	Si	A60f
56#	1S2098	175	4.0n∅	10m	6 0			100			50m	1 3	1.0u			150	3.0p∅	40m	175J	Si	A60g
57♦#	BAX12Δ	175 ∅	37n	30m	3.0		1.0m	100			10m	750mΔ		100u	150J	90	25p	400m	200J	SiΔ	A257a
58	JAN1N3070	175	50n∅	30m			30m	150			100m	1.0 Δ	.10u	.10m	150A	175	5.0p∅	100m	175A	Si	A1ce
59	JAN1N4938	175	50n∅	30m			30m	150			100m	1.0 Δ	.10u	.10m	150A	175	5 0p∅	100m	175A	Si	A9c
60	PD9757	175	70n															40			DO5
61#	1S1621	175	100n	10m	28			2 2k			4.0m	1.0	1.2u			150		30m	150J	Si	DO7
62	1N779	175	300n	5.0m	40	400K					10m	1.0	50u	.03m	125	175				Si	A1bz
63	CSD2314	175	300n	5.0m	40	400K		2k	Δ		5.0m	1.5	.25u	50m	100	175				Si	DO7
64	1N629A	175	500n	30m	35	400K					10m	1.5	.10u	.03m	150	175				Si	DO7
65	CSD2325	175	500n	5.0m	40	80K		2k	Δ		30m	1.5	.25u	50m	100	175				Si	DO7
66	TI550	175	700n∅	5.0m	40			2 0k			100m	1 0 Δ	100n	10u	125A	175	20p∅	15	125A	SiΔ$	A60b
67	CSD2317	175	1.0u	5.0m	40	400K		2k	Δ		5 0m	1.5	25u	50m	100	175				Si	DO7
68	1N434	180	3.0n	30m	35	40K		2k	Δ		2.0m	1.0		18m	150	150	1.0p	35m	150A	SiØ	C3e
69	1N434A	180	3.0n	30m	35	40K		2k	Δ		7 0m	1.0		18m	150	150	1.3p	45m	150A	SiØ	C3e
70	1N434B	180	3.0n	30m	35	40K		2k	Δ		2.0m	1.0		18m	150	150	1.3p	60m	150A	SiØ	C3e
71	NPC89	180	75n	30m			30mt	100			50m	1 3	10u			180	6.0p	100m	200A	Si	DO7
72▼	C6253	180	250n∅	10m			10mt				400m	1.0	1.0u	100u	100	150			175A	Si	M371
73	SG213	180	300n∅	5.0m	40			2k	Δ		5 0m	1.5	.25u	.05m	100	175	2.0p	30m	150A	Si	A1
74	SG223	180	500n∅	20m	40			2k	Δ		30m	1 5	.25u	.05m	100	175	2.0p	55m	150A	Si	A1
75	DR674	180 *	1.0u	30m	35	400K			Ø		100m	1.0	.50u	.01m	100	125				Si	DO7
76	1N3550	180	1.5u∅	20m			500u	2 0k			50m	1.0 Δ		200u	100A	180			150A	Si	DO7
77#	SX643	180	2.0u∅								100m	1 5	500n	5 0u	100	180	5.0pt	270m	150A	Si*	C6
78	MB205	190	20n	10m			10m				1.6	1.0	1.0u	.15m	100	160	25p		175A	Si	A60f
79	MB212	190	20n	10m			10m				1.2	1.0	2.0u	.30m	100	160	25p		175A	Si	A60f
80	SCSDM2L	200	2.0n	500m			1.0				50	1.1 Δ	13u	500u	100A	200		50	150A	Si	M493
81	SCSDM2W	200	2.0n	500m			1 0				50	1.1 Δ	13u	500u	100A	200		50	150A	Si	M492
82	SCSM2	200	2.0n	500m			1.0				100	1.1 Δ	25u	1.0m	100A	200		100	150A	Si	S305∅
83	SCSNM2L	200	2.0n	500m			1.0				50	1.1 Δ	13u	500u	100A	200		50	150A	Si	M493
84	SCSNM2W	200	2.0n	500m			1.0				50	1.1 Δ	13u	500u	100A	200		50	150A	Si	M492
85	SCSPM2L	200	2 0n	500m			1 0				50	1.1 Δ	13u	500u	100A	200		50	150A	Si	M493
86	SCSPM2W	200	2.0n	500m			1 0				50	1.1 Δ	13u	500u	100A	200		50	150A	Si	M492
87	MC1514	200 ∅	4 0n∅	10m	6 0		1.0mØ				10m	2.0	.03u	05m	150	40	4.0p∅		200S	Si	TO18
88	MC1515	200 ∅	4 0n∅	10m	6 0		1.0mØ				20m	2.0	25n	50u	150	40	2.0p∅		200S	Si	TO18
89	SVD203	200	15n															3.0			TO3
90	DSR5200	200	20n	1.0							4.0	1.0 Δ	5.0u					5 0			A146n
91	DSR6200	200	20n	1 0							6.0	1.0 Δ	10u					10			S292
92	SVD206	200	20n															6.0			TO3
93	SVD215	200	25n															15			TO3
94	AM701A	200	30n∅	30m			1 0mΔ				200m	1.0	10u	.10m	150A	160	2.0p∅		175A	SiΔ	DO7
95	AM704A	200	30n∅	30m			1				100m	1.0	10u	10m	150A	160	2.0p∅		175A	SiΔ	DO7
96	AM707A	200	30n∅	30m			1 0mΔ				50m	1 0	.10u	10m	150A	160	2.0p∅		175A	SiΔ	DO7
97	AM710A	200	30n∅	30m			1 0m				10m	1.0	.10u	.10m	150A	160	2.0p∅		175A	SiΔ	DO7
98	AM713A	200	30n∅	30m			1.0m				200m	1 0	.10u	.10m	150A	160	5.0p∅		175A	SiΔ	DO7
99	AM716A	200	30n∅	30m			1 0m				100m	1.0	.10u	.10m	150A	160	5.0p∅		175A	SiΔ	DO7
100	AM719A	200	30n∅	30m			1.0m				50m	1.0	.10u	.10m	150A	160	5.0p∅		175A	SiΔ	DO7
101	AM722A	200	30n∅	30m			1 0m				10m	1.0	10u	.10m	150A	160	5.0p∅		175A	SiΔ	DO7
102	SVD230	200	30n															30			TO3
103	TID41	200 ∅	30n∅	10m			10m	100			100m	1.0 Δ	100n	50u	150A	20	5.0p∅		150A	SiΔ	A60b
104	1N3070	200	50n∅	30m			30m	100			100m	1.0 Δ	100n	100u	150A	175	5.0p∅		200S	Si	DO7
105	1N3071	200	50n∅	30m			30m	150			100m	1.0 Δ	.10u	.10m	150A	150	5.0p∅		200S	Si	DO7
106	1N4938	200 ∅	50n∅	30m			30m	150			100m	1.0 Δ	100n	100u	150A	175	5.0p∅		200S	Si	DO35
107	AM701	200	50n∅	30m			1.0mΔ				200m	1.0	.10u	.10m	150A	160	2.0p∅		175A	SiΔ	DO7
108	AM704	200	50n∅	30m			1				100m	1.0	.10u	.10m	150A	160	2.0p∅		175A	SiΔ	DO7
109	AM707	200	50n∅	30m			1 0mΔ				50m	1.0	10u	.10m	150A	160	2.0p∅		175A	SiΔ	DO7
110	AM710	200	50n∅	30m			1.0m				10m	1.0	.10u	.10m	150A	160	2.0p∅		175A	SiΔ	DO7

SYMBOLS AND CODES EXPLAINED IN INTERPRETER

4. SWITCHING DIODES

IN ORDER OF (1) PIV, (2) RECOVERY TIME, and (3) TYPE No.

LINE No.	3 TYPE No.	1 PIV (V)	2 RECOVERY TIME Trr (s)	TEST CONDITIONS If (A)	Vr (V)	Zr (Ω)	Ir (A)	RL (Ω)	CKT	STORE TIME (s)	MIN. FORWARD CURRENT at 25°C IF (A)	at Vf (V)	MAX. REVERSE CURRENT Ir @25°C & Vr (A)	Ir at T & Vr (A)	TEMP T (°C)	TEST VOLT Vr (V)	CAP. at ZERO VOLTS (F)	ABSOLUTE MAX RATING AVG. FWD I (A)	MAX. TEMP (°C)	MAT.	DESCRIPTION DWG. No.
1	AM713	200	50n⊘	30m			1 0m				200m	1.0	.10u	.10m	150A	160	5.0p⊘		175A	Si△	DO7
2	AM716	200	50n⊘	30m			1 0m				100m	1.0	.10u	.10m	150A	160	5.0p⊘		175A	Si△	DO7
3	AM719	200	50n⊘	30m			1.0m				50m	1.0	.10u	.10m	150A	160	5.0p⊘		175A	Si△	DO7
4	AM722	200	50n⊘	30m			1.0m				10m	1.0	.10u	.10m	150A	160	5.0p⊘		175A	Si△	DO7
5▼#	BA195	200	50n⊘	30m			30m	100			100m	1.0 △	100n	100u	150A	175	5.0p⊘		200A	Si	DO35
6#	BA197	200	50n⊘	10m			10m	100			50m	1.0 △	2.0u			150	1.5p⊘	75m	200S	Si	A1ap
7▼	DSR1087	200	50n⊘	1.0			1.0				100m	1.0 △	500n	25u	100	200		750m			A266
8▼	DSR5201	200	50n⊘	1.0			1.0				4.0	1.1 △	5.0u	100u	100	200		4.0			A196f
9	MC002	200	50n	30m			1.0m	150			100m	1.0	.10u	.10m	150	150	5.0p⊘		75A		A2c
10	MC54	200	50n	10m	6.0		1 0m	100			100m	1.0	.10u	.10m	150	150	5.0p⊘			Si	M409
11	MC1547	200	50n								1.5	1.3 △	.30u	.04m	100	160	100p		200S	Si	A1r
12#	BAW50	200 ⊘	60n⊘	30m			30m	100			.10	1.0 △	100n	100u	125	15	5.0p⊘	.22	150J	Si†	DO7
13	PD2726D	200	70n	1.0	30		1.0				10	1.1 △	10u	15m	150A	200		15	175A	Si	DO4
14	PD9050D	200	70n	1.0	30		1.0				10	1.1 △	10u	10m	150A	200		15	175A	Si	M574
15▼	DSR5202	200	75n⊘	1.0			1.0				3.0	1.1 △	5.0u	100u	100	200		4.0			A196f
16	NPC88	200	75n	30m			30m†	100			10m	1.0	10u			200	6.0p	100m	200A	Si	DO7
17	NPC88A	200	75n	30m			30m†	100			100m	1.0	10u			200	6.0p	100m	200A	Si	DO7
18	UTX120	200	75n⊘	10m			10m⊘				1	1.0	3.0u	.05m	100A	200		1	175A	Si	A146f
19	UTX220	200	75n⊘	10m			10m⊘				2	1.0	3.0u	.05m	100A	200		2	175A	Si	A146f
20	HFR20	200	80n⊘	1			1				1	1.2	1.3u	.20m	100A	200	60p	1.0	175A	Si	A196a
21	1N4824	200 †	100n	1							1.0m	1.3		1.0m	50	200		1	170	Si	DO13
22♦	A28B	200 †	100n†	5.0			4.0				12	700m⊘△		8.0m	135C	100		12	175J	Si△	DO4⊘
23	AM604	200	100n⊘	40m			40m†				300m	1.0	.10u	.10m	150A	160	2.0p⊘	250m	175A	Si△	DO7
24	AM614	200	100n⊘	40m			40m†				300m	1.0	.10u	.10m	150A	160	4.0p⊘	250m	175A	Si△	DO7
25	AM619	200	100n⊘	40m			40m†				200m	1.0	.10u	.10m	150A	160	4.0p⊘	200m	175A	Si△	DO7
26	AM619A	200	100n⊘	40m			40m†				200m	1.0	.10u	.10m	150A	160	2.0p⊘	200m	175A	Si△	DO7
27	AM625	200	100n⊘	40m			40m†				100m	1.0	.10u	.10m	150A	160	4.0p⊘	150m	175A	Si△	DO7
28	AM625A	200	100n⊘	40m			40m†				100m	1.0	.10u	.10m	150A	160	2.0p⊘	150m	175A	Si△	DO7
29	AM631	200	100n⊘	40m			40m†				50m	1.0	.10u	.10m	150A	160	4.0p⊘	150m	175A	Si△	DO7
30	AM631A	200	100n⊘	40m			40m†				50m	1.0	.10u	.10m	150A	160	2.0p⊘	150m	175A	Si△	DO7
31#	BYX61-200	200	100n	1.0	30			1.0			12	1.4 △	25u	3.0m	100C	200		12	150J	Si△	DO4
32#	BYX65-200	200	100n	1.0	30			1 0			30	1.5 △	80u	10m	100C	200		30	150J	Si△	DO5
33▼	DSR1064	200	100n⊘	1.0			1.0				500m	1.1 △	1.0u	50u	100	200		2.0			A266
34▼	DSR6201	200	100n⊘	1.0							6.0	1.2 △	10u	250u	100	200		10			S292a
35	S1N4942	200	100n	500m			1 0				1.0	1.2 △	100n	50u	150	200		1.0 §	200A	Si	A248d
36	S1N5417	200	100n	500m			1.0				3.0	1.2 △	150n	100u	150	200		3.0 §	200A	Si	A248d
37	UTX3120	200	100n⊘	1.0			1.0				2.0	1.0	5.0n	75u	100	200		3.0m	175	Si	
38	UTX4120	200	100n⊘	1.0			1.0				3.0	1.0	5.0n	75u	100	200		4.0m	175	Si	
39	388D	200	120n								1.0	1.1 △		1.0m	125	200		1.0 §	150	Si	DO15
40#	BAX17	200	120n⊘	30m	3.0		1.0m	100			100m	1.1	100n	100u	150J	200	10p⊘	200m	200J	Si	A134c
41#	BAX17A	200	120n⊘	30m	3.0						1.0m	650m△	25n	25u	150J	50	10p⊘	200m	200J	Si	DO35
42	A114B	200	140n								1.0	1.1 △	5.0u	300u	125J	200			125J	Si	A94g
43♦	1N4942	200	150n⊘	1.0			250m				1.0	1.3 △		500u	175A	200	45p⊘	2.0 §	175A	Si	A1tc
44♦	JAN1N4942	200 †	150n⊘	500m			1.0				1.0	1.3 △	1.0u	200u	150A	200	45p†⊘	1.0 §	175A	Si	A1tc
45	1N5417	200	150n⊘	500m			1.0							2.0m	175A	200	150p⊘		175A	Si	A248
46	JAN1N5417	200	150n	500m			1.0		△		3.0	1.3 △	1.0u	20u	100A	200	250p⊘	2.0 §	200A	Si	A248a
47♦	1N5615	200	150n⊘	1.0			250m				1.0	1.2 △	500n	25u	100A	200	45p⊘	1.0	200A	Si	A109c
48	JAN1N5615	200	150n	500m			1.0				1.0	1.2 △	500n	25u	100A	200		1.0	200A	Si	A248e
49	RAB020	200	150n	500m			1.0				3.0	1.3	15u	300u	100	200		3.0 §	150A	Si	A1ez
50	RIB020	200	150n⊘	.50			1.0				3 0	1.3 △	15u	500u	100A	200		3.0	175J	Si	A1eu
51	RL020	200	150n	500m							1	1.3 △	2.0u	.10m	100	200		1	150A	Si	A3c
52	SCBR2F	200	150n	500m			1		△		1.0	1 3 △	.20u△	.06m△	125A	200		1.5	150A	Si	
53	SCT2	200	150n⊘	500m			1 ⊘				1	1.3	1.0u	.03m	125	200	50pt⊘		175J	Si	A1ch
54	1N3876	200 †	200n†	1	30		2				6	1.4		1.0m	100C	200		6	100C	Si	DO10
55	JAN1N3876	200	200n⊘	1.0	30		2 0				6.0	1.4 △	15n	1.0u	100A	200		6.0 §	150C	Si	DO10
56	1N3881	200 †	200n†	1	30		2				6	1.4	15u	3.0m	100C	200		6	150C	Si△	DO4
57	JAN1N3881,R	200	200n⊘	1	30		2				6	1.4 △	15u	1.0m	100A	200		6 §	150C	Si	DO4⊘
58	1N3881R	200	200n⊘	5.0	100		5 0				6.0	1.4 △	15u	1.0m	100C	200		6.0	150J	Si	DO4
59	1N3886	200	200n⊘	1	30						12	1.4			100	200			175S	Si	DO10
60	JAN1N3886	200 †	200n⊘	1.0	30		2 0				38	1.5	25u	3.0m	100C	200		12 §	150C	Si	DO10
61	1N3891	200	200n†⊘	1.0	30						12	1.4	25u	3 0m	100C	200		12	150C	Si	DO4⊘
62	JAN1N3891,R	200 †	200n⊘	1	30		2				38	1.5 △	25u	3.0m	100C	200		12 §	150C	Si	DO4
63	1N3901	200 †	200n†	1	30		3						50u	6.0m	100C	200		20m	150C	Si△	DO5
64	1N3906	200	200n⊘	1	30						20	1 4		6.0m	100	200			175S	Si△	DO11
65	1N3911	200 †	200n†	1	30		3						80u	10m	100C	200		30m	150J	Si△	DO5
66	JAN1N3911,R	200	200n⊘	1.0	30						95	1.4 △	80u	10m	100C	200		30 §	150A	Si	DO5
67	1N3916	200 †	200n⊘	1	30						30	1.4		10m	100	200			175S	Si	DO11
68	1N4935	200	200n⊘	1	30				△		1	1.2	5.0u	10m	100	50		1	150	Si	A1az
69	JAN1N5187	200	200n	500m			1.0				9.0	1.5 △	2.0u	100u	100	200	300p⊘	3.0	175A	Si	A1dg
70#	MC42	200	200n	100m	30		100m				400m	1.0 △	2.0u	100u	100A	200	35p⊘	.50	125A	Si△	DO7
71#	MC47	200	200n⊘	100m			100m				250m	1.0 △	2.0u	100u	100A	200	35p⊘	250m	125A	Si△	DO7
72	MR832	200	200n⊘	1							3	1.1 △	50u	2.5m	100	200		3	150J	Si	A179a
73	PBR20	200	200n⊘	50			1.0				3.0	1.2 △	25u					15	125C	Si	*
74	SCSDF2L	200	200n	500m			1 0				50	1.2 △	13u	500u	100A	200		50	150A	Si	M493
75	SCSDF2W	200	200n	500m			1.0				50	1.2 △	13u	500u	100A	200		50	150A	Si	M492
76	SCSF2	200	200n	500m			1 0				100	1.2 △	25u	1.0m	100A	200		100	150A	Si	S305⊘
77	SCSNF2L	200	200n	500m			1.0				50	1.2 △	13u	500u	100A	200		50	150A	Si	M493
78	SCSNF2W	200	200n	500m			1.0				50	1.2 △	13u	500u	100A	200		50	150A	Si	M492
79	SCSPF2L	200	200n	500m			1.0				50	1.2 △	13u	500u	100A	200		50	150A	Si	M493
80	SCSPF2W	200	200n	500m			1.0				50	1.2 △	13u	500u	100A	200		50	150A	Si	M492
81#	SF2AN6	200 †	200n	6.0							6 0	1.0		2.0m	125B	200	6 0		150S	Si	DO4⊘
82#	SF2AN12	200 †	200n	10							10	1.0		2.0m	125B	200	10		150S	Si	DO4⊘
83#	SF2CN1	200 †	200n	1.0							1.0	1.2	10u	250u	125B	200		1.0	125B	Si	A31n
84	TFR120	200	200n⊘	1.0					†		1.0	1.2 △		1.0m	150	200		1.0	175C	Si	Z34
85	TFR320	200	200n⊘	1.0					†		3.0	1.2 △		2.0m	150	200		3.0	175C	Si	Z34
86	TFR620	200	200n⊘	1.0					†		6.0	1.2 △		3.0m	150	200		6.0	175C	Si	Z34
87	TFR1220	200	200n⊘	1.0					†		12	1.2 △		4.0m	150	200		12	175C	Si	Z34
88	VYA200X	200 †	200n⊘	1.0			2.0	30			10 $	1.2		5.0m	100C	200		25	150J	Si△	Z62*
89	VYB200X	200 †	200n⊘	1.0			2.0	30			10 $	1.2		5.0m	100C	200		25	150J	Si△	Z62*
90	VYC200X	200 †	200n⊘	1.0			2.0	30			10 $	1.2		5.0m	100C	200		25	150J	Si△	Z62*
91	VYD200X	200 †	200n⊘	1.0			2 0	30			10 $	1.2		5.0m	100C	200		25	150J	Si△	Z62*
92	VYE200X	200 †	200n⊘	1.0			2.0	30			10 $	1.2		5.0m	100C	200		13	150J	Si△	Z62*
93	VYF200X	200 †	200n⊘	1.0			2.0	30			10 $	1.2		5.0m	100C	200		13	150J	Si△	Z62*
94	VYG200X	200 †	200n⊘	1.0			2.0	30			10 $	1.2		5.0m	100C	200		13	150J	Si△	Z62*
95▼	1N5187A	200	250n⊘	1.0			1.0				4.0	1.1 △	2.0u	80u	100	200	250p	4.0	175A	Si	A146p
96#	FR2001	200	250n⊘	100m			100m				1.0	1.3 △		200u	100A	200		1.0	150A	Si△	DO13
97	SLA5199HF	200	250n⊘	500m			1.0				3.0	1.0 △	5.0u	100u	100	200		3.0 §	175A	Si△	A31n
98	UTR20	200	250n⊘	10m			10m⊘				200m	1.1	3.0u	.10m	100A	200	80p⊘	.50m	175A	Si	A146f
99	UTR21	200	250n⊘	10m			10m⊘				500m	1.1	3.0u	.10m	100A	200	80p⊘	1	175A	Si	A146f
100	UTR22	200	250n⊘	10m			10m⊘				1	1.1	3.0u	.10m	100A	200	80p⊘	2	175A	Si	A146f
101	UTR2320	200	250n	1			1 ⊘				2	1.1	5.0u	10m	150	200	320p	2	175	Si	A146m
102	1N643	200	300n⊘	5.0m	40	200k		2.3k			10m	1.0	1.0u	20u	100	100	3.0pt		150A	Si△	DO7
103	JAN1N643	200	300n⊘	5.0m			18m	2.3k			10m	1.0	1.0u	15u	100	10		40m	150A	Si	A1
104	1N643A	200 †	300n	5.0m	40	200k			△		100m	1.0	1.0u	15u	100	100			150A	Si	A1bz
105	1N643M	200	300n	5.0m	40	200k			△		10m	1.0		15u	100A	100				Si△	A2
106	1N661	200	300n⊘	30m	35	400K							10u	.10m	100	200	2.7pt	100m	150A	Si△	A1
107	JAN1N661	200	300n⊘	30m	35	400K		2k			6.0m	1.0 △	10u	.10m	100C	200	2.7pt⊘	100m	150A	Si	A1
108	1N661A	200	300n⊘	30m	35	400K		2k	△		10m	1.0	.03u	.05m	150	200	2.0pt	100m	150A	Si⊘	DO7
109	1N807	200	300n	5.0m	40				△		4.0m	1.0	.50u	.05m	125	175				Si	DO7
110	1N809	200	300n	30m	35				△		100m	1.0	1.0u	.05m	125	200				Si	DO7

SYMBOLS AND CODES EXPLAINED IN INTERPRETER

4. SWITCHING DIODES

IN ORDER OF (1) PIV, (2) RECOVERY TIME, and (3) TYPE No.

LINE No.	3 TYPE No.	1 PIV (V)	2 RECOVERY TIME Trr (s)	TEST CONDITIONS If (A)	Vr (V)	Zr (Ω)	Ir (A)	RL (Ω)	CKT	STORE TIME (s)	MIN. FORWARD CURRENT at 25°C IF (A)	at Vf (V)	MAX. REVERSE CURRENT Ir @25°C & Vr (A)	Ir at T & Vr (A)	TEMP T (°C)	TEST VOLT Vr (V)	CAP. at ZERO VOLTS (F)	ABSOLUTE MAX RATING AVG FWD I (A)	MAX. TEMP (°C)	MAT.	DESCRIPTION DWG. No.
1	1N843	200	300n⊘	30m	35	400K			△		150m	1 0	10u	.02m	100	200	3 5p	150m	175A	Si	A1bz
2	MC643	200	300n	5.0m	40	200k					10m	1 0	25n	5 0u	100	10			175A		A2c
3	MC643A	200	300n	5.0m	40	200k					10m	1 0	25n	5 0u	100	10			175A		A2c
4	MC779	200	300n	5.0m	40	400K					10m	1 0	50u	03m	125	175			175A		A2c
5	MC807	200	300n	5.0m	40	400K					4.0m	1 0	50u	.05m	100	175			175A		A2c
6	MC842	200	300n	30m	35	400k					150m	1 0	100n	15u	100	160			175A		A2c
7	PD041	200	300n	5.0m	40	200k					10m	1 0	25n	5.0u	100	10	2 0pt		150A		A2c
8	PD042	200	300n	5.0m	40	200k					10m	1.0	500n	25u	100	10	2.0pt		150A		A2c
9	PD109	200	300n			200k					10m	1.0	25n	5.0u	100	10				Si	A2
10	PM041	200	300n	5.0m	40	200k					10m	1 0	25n	5 0u	100	10	2 0p		150A		M163
11	PM042	200	300n	5 0m	40	200k					10m	1.0	500n	25u	100	10	2.0p		150A		M163
12	PS723	200 †	300n⊘	5.0m	40	100K		2 3k	△		3.0m	1.0	20u	.10m	100	175	3 0pt		150A	Si△	A60p
13	RS20	200	300n	1	30		3				6	1 4 △	15u	3 m	100C	200		6	150C	Si	DO4
14	RT20	200	300n	1	30		1 4m				12	1 4 △	25u	5.0m	100C	200		12	150C	Si	DO4
15	RTC20	200	300n⊘	1.0	30		2.0				20	1 2 △	25u					40	175C	Si	M446*⊘
16	TMD27	200	300n⊘	5.0m	40		10m⊘				20m	1 0	50u	03m	100	20	4 0pt	50m	150A	Si△	A2
17	WA400	200	300n	30m	35	200k			△		400m	1 0	100n	15u	100	175				Si	DO7
18#	BYX30/200	200	350n⊘	2.0	30		2.0				50	3.2 △		4.0m	125J	200			150J	Si	DO4⊘
19#	BYX46-200	200	350n	2	30		2				50	2.0 △		4 0m	125J	200		15 §	165J	Si	DO4⊘
20	UTR4420	200	400n⊘	1			1		△		4.0m	1 1	10u	30m	100	200		6 0m	175A	Si	S277⊘
21	UTR5420	200	400n⊘	1			1		△		5.0m	1 1	10u	.30m	100	200		7 5m	175A	Si	S277⊘
22	UTR6420	200	400n⊘	1			1		△		6.0m	1 1	10u	30m	100	200		9 0m	175A	Si	S277⊘
23	1N803	200 †	500n	5.0m	40	200K			△		10m	1 0	5 0u	05m	100	175				Si	A60p
24	1N804	200	500n	5.0m	40	200K			△		50m	1 0	10u	.05m	100A	175				Si△	A60p
25	1N839	200	500n	30m	35	400K					150m	1 0								Si	A1bz
26	1N845	200	500n	30m	35	400k			△		200m	1.0	100n	15u	100	160				Si	A1bz
27	MC803	200	500n	5.0m	40	200K					10m	1.0	5 0u	.05m	100	175			175A		A2c
28	MC804	200	500n	5.0m	40	200K					50m	1.0	10u	05m	100	175			175A		A2c
29	MC839	200	500n	30m	35	400k					150m	1 0	100n	15u	100	175			175A		A2c
30	MC845	200	500n	30m	35	400k					200m	1.0	100n	15u	100	160			175A		A2c
31#	RPX200	200	500n⊘	1.0	30						1 0	1 5 △	3 0u					1 0	150A		A31a
32▼#	BYX59-200	200	700n⊘	50	30						250	1 8 △		25m	125J	200		40 §	125C	Si△	S72n
33▼#	HFSD1Z	200	800n	2.0m	15						500m	1 2	10u			200		300m	100J	Si	A221f
34	1N629	200 ⊘	1.0u	30m	35	400K			⊘		4 0m	1 5	1 0u	03m	100	20		20m	150A	Si	A1bz
35	1N817	200 †	1.0u⊘	30m	35	400K		2k	⊘		6 0m	1 5	20u	10m	100	175	7.0pt		150S	Si	DO7
36#	ER2△	200	1.0u	100m			100m				1 0	1 3 △		200u	100A	200		1.0		Si	A1em
37	S1N4245	200	1 0u	500m			1 0				1 0	1 1 △	100n	50u	150	200		1.0 §	200A	Si	A248d
38	S1N5199	200	1.0u	500m			1 0				3 0	1 0 △	150n	100u	150	200		3 0 §	200A	Si	A248d
39	SCBR2M	200	1.0u	500m			1		△		1 0	1 3 △	.20u△	.06m△	125A	200		1 5	150A	Si	
40	SG218	200	1.0u	5.0m	40			2k	△		5 0m	1 5	.25u	.02m	100	175	2 0p	30m	150A	Si	A1
41	SG228	200	1.0u	20m	40			2k	△		100m	1 5	25u	05m	100	175	2 0p	80m	150A	Si	A1
42♦#	SR1HM4	200	1.0u	10m			10m				500m	1 4 △	10u	300u	100J	200		400m§	100J	Si§	A1bv
43	1N3959C	200	1.5u	10										400u	150A	200			165A	Si	DO4
44	101KL20S15	200 †	1.5u⊘	315			30				315	1 4		15m⊘	120C	200		100 §	175J	Si	DO8⊘
45	1N5550	200	2.0u⊘	500m			250m				3.0	1 0 △⊘	1 0u	25u	100A	200	150pt⊘	3.0 §	200A	Si	A248a
46♦	1N5614	200	2.0u⊘	1.0			250m				1.0	1 2 △	500n	25u	100A	200	45p⊘	1.0	200A	Si	A109c
47	JAN1N5614	200	2.0u	500m			1 0				1 0	1 2 △	500n	25u	100A	200		1.0	200A	Si	A248e
48#	1S84	200	2.0u	30m	30	38K	30m	2k			4.0m	.70	1 0u		25	100		100m	125	Si	DO7
49	101KL20S20	200 †	2.0u⊘	315			35				315	1 4		15m⊘	120C	200		100 §	175J	Si	DO8⊘
50▼	G1D	200	2.0u	500m			1 0				1.0	1.0 △	2.0u	100u	100J	200	14p	1 0 §	175A		A94j
51▼	G2D	200	2.0u	500m			1.0				2.0	1.2 △	500n	10u	100J	200	14p	2.0 §	175A		A94j
52#	2420	200 *	2.5u⊘⊘	30m	5 0	50K			⊘		100m	1 5	5 0u			200			150J	Si*	A134
53	1N3959	200	3.0u⊘	10	50	250K	900m				1 2m	50		40m	150	200		3 5	165B	Si	DO4
54	JAN1N5550	200	3.0u	500m			1 0				3.0	1 0 △	1 0u	20u	100A	200		3 0	200A	Si	A248b
55▼	G3D	200	3.0u	500m			1 0				3 0	1 0 △	2 0u	100u	100J	200	3 0p	3 0 §	175A		A94m
56#	F200	200	4.0u⊘	20m			2 0m		⊘		300m	1 2 △	1 0u		25A	200		300m§	125A	Si	DO29
57#	SF2GR315	200	4.5ut	250			25m				250	775m⊘		25m		200				Si△	M522
58#	SF2HR315	200	4.5ut	250			25m				250	775m⊘		25m		200				Si△	M523
59	JAN1N4245	200 †	5.0u⊘	500m			1 0				1 0m	1 3 △	1 0u	150u	150A	200		1 0 §	175A	Si	A1tc
60	JAN1N5624	200 †	5.0u⊘	500m			1.0				3 5	1 0 △	1 0u	100u	150A	200		2.5 §	200A	Si	A248j
61#	1SB20	200	5.0u								1.0	2 5 △		300u	100J	200		1 0 §	150S		M562
62#	2502	200	5.0u⊘	20m			2 0m		⊘		1 8	1 5	10u			200	40p	600m	150J	Si	A9h
63#	2602	200	5.0u⊘	20m			2 0m		⊘		7 5	1 8	10u			200	40p	25	50J	Si	S87e
64#	2612	200	5.0u⊘	20m			2 0m				15	1 8	10u			200	100p	50	50J	Si	S87e
65#	DA1-200	200	10u	10	200						1 0	1 0 △	10u		25J	200		1 0 §	145J	Si	A1ea
66#	MSR20	200	20u	20m			1 0m		⊘		1.0	1 2 △		5 0u		200	30p	1.5 §	150A	Si	DO27
67#	PL4003	200 †	20u	20m			1 0m		⊘		1 0	1 2 △	5 0u			200	30p	1 5 §	150A	Si△	DO27
68	CB20F	200	250m	500m			1 0				750m	1 3 △	5 0u	150u	100	200		750m§	150A	Si	A1bg
69	MB206	215	20n	10m			10m				1 6	1 0	1.5u	20m	100	185	25p		175A	Si	A60f
70	MB213	215	20n	10m			10m				1 2	1 0	3 0u	40m	100	185	25p		175A	Si	A60f
71	MB216	215	200n	5.0m	40	100K					1 2	1 3 △	1 0u	10m	100	185	10p	15	75A	Si	A60f
72	MB223	215	200n	5.0m	40	100K					850m	1 3 △	3 0u	50m	100	185	10p	15	75A	Si	A60f
73	MT202	215	200n	5.0m	40	250k		100k			500m	1 0	1 0u	100m	100A	185	6 0p				A60e
74	MT209	215	200n	5.0m	40	250k		100k			250m	1 0	3 0u	500m	100A	185	6 0p				A60e
75#	SFD88	220 ⊘	75n⊘	30m			30mt	100			10m	1 0	10u			200	6 0p⊘	100m	200S	Si#$	DO7
76#	SFD88A	220 ⊘	75n⊘	30m			30mt	100			100m	1 0	10u			200	6 0p⊘	100m	200S	Si#$	DO7
77#	SFD89	220 ⊘	75n⊘	30m			30mt	100			50m	1 3	10u			180	6.0p⊘	100m	200S	Si#$	DO7
78	MC809	220	300n	30m	35	100K					100m	1.0	1 0u	.05m	100	200			175A		A2c
79#	2301	220	1.5u⊘⊘	30m	35	400K			⊘		10m	1.0	1 0u			185			150J	Si*	A134
80#	2302△	220	1.5u⊘⊘	30m	35	400K			⊘		10m	1 0	1 0u			185			150J	Si*	F43
81#	1S2097	225	4.0n⊘	10m	6.0			100			50	1.4	1.0u			200	3 0p⊘	30m	175J	Si	A60g
82	TI551	225	700n⊘	5.0m	40			2 0k			100m	1 0 △	100n	10u	125A	225	20p⊘	15	125A	Si△$	A60b
83	WA500	235	300n	30m	35	200k			△		400m	1 0	100n	15u	100	175				Si	DO7
84	1N5187	240	250n⊘	1			1				3	1 1 △	5 0u	10m	100A	200	320p	3	175A	Si	A146e
85▼	C6254	240	250n⊘	10m			10mt				400m	1 0	1 0u	100u	100	200			175A	Si	M371
86	1N893	240	300n	5.0m	40	80k			△		50m	1 0	100n	25u	200	200				Si	DO7
87	DR833	240 *	300n	5.0m	40	400K			△		5.0m	1.5	25u	05m	100	175				Si	DO7
88	MC661	240	300n	30m	35	400K					6.0m	1.0	10u	10m	100	200			175A		A2c
89	MC661A	240	300n	30m	35	400k					10m	1 0	25n	5.0u	150	200			175A		A2c
90	MC893	240	300n	5.0m	40	80k					50m	1.0	100n	25u	150	200			175A		A2c
91	DR675	240 *	1.0u	30m	35	400K			⊘		100m	1 0	50u	01m	100	175				Si	DO7
92	TID40	250 ⊘	30n⊘	10m		10K	100m				50m	1 0 △	10u	05m	150A	20	5 0p⊘		150A	Si△	A60b
93#	BA198	250	50n⊘	10m			10m	100			50m	1 0 △	2 0u			200	1 5p⊘	75m	200S	Si	A1ap
94▼	DSR1088	250	50n⊘	1.0			1.0				100m	1.0 △	500n	25u	100	250		750m			A266
95	TID45	250	50n⊘	10m			10m	100			1 0m	800m△	2 0u			200	1.5p⊘		200S	Si△	A60b
96	PD2726E	250	70n	1.0	30		1.0				10	1.2 △	10u	15m	150A	250		15	175A	Si	DO4
97	PD9050E	250	70n	1.0	30		1.0				10	1 2 △	10u	10m	150A	250		15	175A	Si	M574
98	UTX125	250	75n⊘	10m			10m⊘				1	1 0	3.0u	05m	100A	250		1	175A	Si	A146f
99	UTX225	250	75n⊘	10m			10m⊘				2	1 0	3.0u	05m	100A	250		2	175A	Si	A146f
100	387E	250 †	200nt	1	30		3							6.0m	100C	250		20m	150J	Si△	DO5
101	389E	250 †	200nt	1	30		3							10m	100C	250		35m	150C	Si△	DO5
102	478E	250 †	200nt	1	30		2				6	1.1		10m	150C	250		6	175J	Si△	DO4
103	479E	250 †	200nt	1	30		2				12	1 4		10m	150C	250		12	150C	Si△	DO4
104#	GR2	250	200n⊘	1.0	30						4 0	1.4 △⊘	15u	200u				4.0	125C	Si△	DO4
105	MC843	250	300n	30m	35	400k					150m	1 0	100n	15u	100	200			175A		A2c
106#	MR21	250	1.0u	100m			100m				30m	1.0 △	2.0u				35p⊘	30m	125A	Si△	DO7
107	DR694	260 *	1.0u	30m	35	400k			⊘		100m	1 0		15u	55	185				Si	DO7
108	WA600	275	300n	30m	35	200k			△		400m	1.0	100n	15u	100	225				Si	DO7
109	AM706A	300	30n⊘	30m			1.0m△				50m	1 0	.10u	.10m	150A	240	2 0p⊘		175A	Si△	DO7
110	AM709A	300	30n⊘	30m			1 0m				10m	1.0	.10u	.10m	150A	240	2.0p⊘		175A	Si△	DO7

SYMBOLS AND CODES EXPLAINED IN INTERPRETER

4. SWITCHING DIODES

IN ORDER OF (1) PIV, (2) RECOVERY TIME, and (3) TYPE No.

LINE No.	3 TYPE No.	1 PIV (V)	RECOVERY TIME 2 Trr (s)	TEST CONDITIONS If (A)	Vr (V)	Zr (Ω)	Ir (A)	RL (Ω)	CKT	STORE TIME (s)	MIN. FORWARD CURRENT at 25°C IF (A)	at Vf (V)	MAX. REVERSE CURRENT Ir @25°C & Vr (A)	Ir at T & Vr (A)	TEMP T (°C)	TEST VOLT Vr (V)	CAP. at ZERO VOLTS (F)	ABSOLUTE MAX RATING AVG. FWD I (A)	MAX. TEMP (°C)	DESCRIPTION MAT.	DWG. No.
1	AM712A	300	30n⊘	30m			1.0m				200m	1 0	.10u	.10m	150A	240	5.0p⊘		175A	Si△	DO7
2	AM715A	300	30n⊘	30m			1 0m				100m	1 0	.10u	10m	150A	240	5 0p⊘		175A	Si△	DO7
3	AM718A	300	30n⊘	30m			1 0m				50m	1 0	.10u	.10m	150A	240	5 0p⊘		175A	Si△	DO7
4	AM721A	300	30n⊘	30m			1.0m				10m	1.0	.10u	10m	150A	240	5.0p⊘		175A	Si△	DO7
5	AM703	300	50n⊘	30m			1				100m	1 0	.10u	.10m	150A	240	2.0p⊘		175A	Si△	DO7
6	AM703A	300	50n⊘	30m			1				100m	1 0	10u	.10m	150A	240	2.0p⊘		175A	Si△	DO7
7	AM706	300	50n⊘	30m			1 0m△				50m	1 0	.10u	10m	150A	240	2.0p⊘		175A	Si△	DO7
8	AM709	300	50n⊘	30m			1 0m				10m	1 0	.10u	10m	150A	240	2.0p⊘		175A	Si△	DO7
9	AM712	300	50n⊘	30m			1 0m				200m	1 0	.10u	10m	150A	240	5 0p⊘		175A	Si△	DO7
10	AM715	300	50n⊘	30m			1 0m				100m	1 0	.10u	.10m	150A	240	5 0p⊘		175A	Si△	DO7
11	AM718	300	50n⊘	30m			1 0m				50m	1 0	.10u	.10m	150A	240	5 0p⊘		175A	Si△	DO7
12	AM721	300	50n⊘	30m			1 0m				10m	1 0	10u	.10m	150A	240	5 0p⊘		175A	Si△	DO7
13▼	DSR5301	300	50n⊘	1.0			1 0				4 0	1 1 △	5.0u	100u	100	300		4 0			A196f
14	MC1548	300	50n								1 5	1 3 △	30u	04m	100	240	100p		200S	Si	A1r
15	PD2726F	300	70n	1.0	30	1 0					10	1 2 △	10u	15m	150A	300		15	175A	Si	DO4
16▼	DSR5302	300	75n⊘	1 0			1 0				3.0	1 1 △	5 0u	100u	100	300		4 0			A196f
17♦	A28C	300 †	100n†	5 0			4 0				12	700m⊘△		8 0m	135C	100		12	175J	Si△	DO4⊘
18	AM603	300	100n⊘	40m			40m†				300m	1.0	.10u	.10m	150A	240	2.0p⊘	250m	175A	Si△	DO7
19	AM613	300	100n⊘	40m			40m†				300m	1.0	10u	10m	150A	240	4 0p⊘	250m	175A	Si△	DO7
20	AM618	300	100n⊘	40m			40m†				200m	1 0	10u	10m	150A	240	4.0p⊘	200m	175A	Si△	DO7
21	AM618A	300	100n⊘	40m			40m†				200m	1.0	.10u	10m	150A	240	2.0p⊘	200m	175A	Si△	DO7
22	AM624	300	100n⊘	40m			40m†				100m	1 0	10u	10m	150A	240	4.0p⊘	150m	175A	Si△	DO7
23	AM624A	300	100n⊘	40m			40m†				100m	1 0	.10u	.10m	150A	240	2.0p⊘	150m	175A	Si△	DO7
24	AM630	300	100n⊘	40m			40m†				50m	1 0	10u	10m	150A	240	4 0p⊘	150m	175A	Si△	DO7
25	AM630A	300	100n⊘	40m			40m†				50m	1 0	10u	10m	150A	240	2.0p⊘	150m	175A	Si△	DO7
26#	BYX61-300	300	100n	1.0	30			1 0			12	1 4 △	25u	3 0m	100C	300		12	150J	Si△	DO4
27#	BYX65-300	300	100n	1 0	30			1 0			30	1 5 △	80u	10m	100C	300		30	150J	Si△	DO5
28▼	DSR1065	300	100n⊘	1 0			1 0				500m	1 1 △	1.0u	50u	100	300		2 0			A266
29	388F	300	120n								1 0	1 1 △		1 0m	125	300		1.0 §	150	Si	DO15
30	A114C	300	140n								1 0	1 1 △	5 0u	300u	125J	300			125J	Si	A94g
31♦	1N4943	300	150n⊘	1.0			250m				1 0	1 3 △		500u	175A	300	40p⊘	2.0 §	175A	Si	A1tc
32	SCT3	300	150n⊘	500m			1 ⊘				1	1 3	1 0u	03m	125	300	45p⊘†		175J	Si	A1ch
33	SF3	300	150n	500m			1				1	1 3	.10u	03m	125	300	35p†		175J	Si	A1bs
34	1N3877	300 †	200n†	1	30		2				6	1 4		1 0m	100C	300		6	100C	Si	DO10
35	1N3882	300 †	200n†	1	30		2				6	1 4	15u	3 0m	100C	300		6	150C	Si△	DO4
36	1N3882R	300	200n⊘	5.0	150		5 0				6 0	1 4 △	15u	1 0m	100C	300		6 0	150J	Si	DO4
37	1N3887	300	200n⊘	1	30						12	1 4			100	300			175S	Si	DO10
38	1N3892	300	200n†⊘	1.0	30						12	1 4	25u	3 0m	100C	300		12	150C	Si	DO4⊘
39	1N3902	300 †	200n†	1	30		3						50u	6 0m	100C	300		20m	150C	Si△	DO5
40	1N3907	300	200n⊘	1	30						20	1 4		6 0m	100	300			175S	Si△	DO11
41	1N3912	300 †	200n†	1	30		3						80u	10m	100C	300		30m	150J	Si△	DO5
42	JAN1N3912,R	300	200n⊘	1.0	30						95	1 4 △	80u	10m	100C	300		30 §	150A	Si	DO5
43#	MC43	300	200n	100m	30		100m				400m	1 0 △	2.0u	100u	100A	300		50	125A	Si△	DO7
44#	MC48	300	200n⊘	100m			100m				250m	1 0 △	2 0u	100u	100A	300	35p⊘	250m	125A	Si△	DO7
45	MR2271	300	200n				50m⊘				1	1.1 △	250u	.75m	75	300		1	150J	Si△	A31a
46#	SF3AN6	300 †	200n	6.0							6 0	1 0		2 0m	125B	300	6 0		150S	Si	DO4⊘
47#	SF3AN12	300 †	200n	10							10	1 0		2 0m	125B	300	10		150S	Si	DO4⊘
48#	SF3CN1	300 †	200n	1.0							1 0	1 2	10u	250u	125B	300		1 0	125B	Si	A31n
49#	FR3001	300	250n⊘	100m			100m				1 0	1 3 △		200u	100A	300		1 0	150A	Si△	DO13
50	DR667	300	300n	5.0m	40	80K			△		100m	1 0	25u	02m	100	200				Si	DO7
51	RS30	300	300n	1	30		3				6	1 4 △	15u	3.0m	100C	300		6	150C	Si	DO4
52	RT30	300	300n	1	30		1.4m				12	1 4 △	25u	5.0m	100C	300		12	150C	Si	DO4
53	UTR30	300	300n⊘	10m			10m⊘				200m	1 1	3.0u	.10m	100A	300	70p⊘	.50m	175A	Si	A146f
54	UTR31	300	300n⊘	10m			10m⊘				500m	1.1	3 0u	10m	100A	300	70p⊘	1	175A	Si	A146f
55	UTR32	300	300n⊘	10m			10m⊘				1	1.1	3 0u	.10m	100A	300	70p⊘	2	175A	Si	A146f
56#	BA173	300	350n	10m			10m				100m	1.0 △	1 0u			300	2 5p†	3 0	150J	Si△	A1su
57#	BYX30/300	300	350n⊘	2.0	30		2 0				50	3.2 △		4 0m	125J	300			150J	Si	DO4⊘
58#	BYX46-300	300	350n	2	30		2				50	2 0 △		4 0m	125J	300		15 §	165J	Si	DO4⊘
59▼#	BAW84	300	700n⊘	10m			10m				100m	1 0 △	50n				3 5p⊘				DO35
60▼#	BYX59-300	300	700n⊘	50	30						250	1 8 △		25m	125J	300		40 §	125C	Si△	S72n
61	1N3960C	300	1.5u	10										400u	150A	300			165A	Si	DO4
62#	1S1237	300	1.8u⊘	10m	6 0		250u	2 0k			10m	4.0		1 2m	75J	300		10m	125J	Si	A50d
63#	SX644	300	2.0u⊘								100m	1 5	500n	15u	100	300	5 0p†	200m	150A	Si*	C6
64	1N3960	300	3.0u⊘	10	50	250k	900m				1 2m	50		400u	150	300		3 5	165B	Si	DO4
65	USAF120ES476P	300 ⊘	4.0u⊘	40m	5.0		5 0m	1 0k			400m	1 0	25n	5.0u	100A	225	30p⊘	400m	150	Si	A1
66#	SF3GR315	300	4.5u†	250			25m				250	775m⊘		25m		300				Si△	M522
67#	SF3HR315	300	4 5u†	250			25m				250	775m⊘		25m		300				Si△	M523
68	USAF120ES471P	300 ⊘	20u⊘	40m	5 0		5 0m	1 0k			400m	1 0	25n	5.0u	100A	225	40p⊘	400m	150	Si	A1
69	MB217	320	200n	5.0m	40	100k					1 2	1.3 △	1 0u	100u	100	270	10p	1 5	175A	Si	A60f
70	MB224	320	200n	5 0m	40	100k					850m	1 3 △	3.0u	500u	100	270	10p	1 5	175A	Si	A60f
71	MT203	320	200n	5.0m	40	250k		100k			500m	1 0	1.0u	100m	100A	270	6 0p				A60e
72	MT210	320	200n	5.0m	40	250k		100k			250m	1 0	3 0u	500m	100A	270	6 0p				A60e
73	DSR1335	350	10n	10							100m	1 0 △	500n					1.0			A266
74	DSR1135	350	30n	10							100m	1.0 △	500n					1 0			A266
75	PD2726G	350	70n	1.0	30		1 0				10	1 2 △	10u	15m	150A	350		15	175A	Si	DO4
76#	GR4	350	200n⊘	1.0	30						4 0	1 4 △⊘	15u	200u				4 0	125C	Si△	DO4
77#	MR31	350	1.0u	100m			100m				30m	1 0 △	2.0u				35p⊘	30m	125A	Si△	DO7
78	1N2791	350	4.0u⊘	10m			10m				50m	1 3 △					6 0p⊘		200S	Si	C29m
79	MC1174P1	400	2.0n⊘										25n				2 0p⊘		50A		M206
80	MC1174P2	400	2.0n⊘										25n	5 0u	100	100	2 0p⊘		50A		M182
81	MC1174Q	400	2.0n								1 0m⊘		25n			100			150	Si	Z10
82	MC1175P1	400	2.0n⊘										25n				2.0p⊘		50A		M206
83	MC1175P2	400	2.0n⊘										25n	5 0u	100	100	2.0p⊘		50A		M182
84	MC1175Q	400	2.0n								1 0 ⊘		25n	5 0u	100	100			150	Si	Z10
85	MC1176P1	400	2.0n⊘										25n				2.0p⊘		50A		M206
86	MC1176P2	400	2.0n⊘										25n	5.0u	100	100	2 0p⊘		50A		M182
87	MC1176Q	400	2.0n								1 0m⊘		25n			100			150	Si	Z10
88	MC1177P1	400	2.0n⊘										25n				2 0p⊘		50A		M206
89	MC1177P2	400	2.0n⊘										25n	5 0u	100	100	2 0p⊘		50A		M182
90	MC1177Q	400	2.0n								1 0m⊘		25n	5 0u	100	100			150	Si	Z10
91	MC1178P1	400	2.0n⊘										25n				2.0p⊘		50A		M206
92	MC1178P2	400	2.0n⊘										25n	5 0u	100	100	2 0p⊘		50A		M182
93	MC1178Q	400	2.0n								1 0m⊘		25n			100			150	Si	Z10
94	MC1179P1	400	2.0n⊘										25n				2 0p⊘		50A		M206
95	MC1179P2	400	2.0n⊘										25n	5 0u	100	100	2 0p⊘		50A		M182
96	MC1179Q	400	2.0n								1.0m⊘		25n	5.0u	100	100			150	Si	Z10
97	SCSDM4L	400	2.0n	500m			1.0				50	1 1 △	13u	500u	100A	400		50	150A	Si	M493
98	SCSDM4W	400	2.0n	500m			1 0				50	1 1 △	13u	500u	100A	400		50	150A	Si	M492
99	SCSM4	400	2.0n	500m			1 0				100	1.1 △	25u	1.0m	100A	400		100	150A	Si	S305⊘
100	SCSNM4L	400	2.0n	500m			1 0				50	1.1 △	13u	500u	100A	400		50	150A	Si	M493
101	SCSNM4W	400	2.0n	500m			1 0				50	1 1 △	13u	500u	100A	400		50	150A	Si	M492
102	SCSPM4L	400	2.0n	500m			1 0				50	1.1 △	13u	500u	100A	400		50	150A	Si	M493
103	SCSPM4W	400	2.0n	500m			1 0				50	1 1 △	13u	500u	100A	400		50	150A	Si	M492
104▼	DSR5401	400	50n⊘	1 0			1 0				4 0	1 1 △	5 0u	100u	100	400		4.0			A196f
105	MC1549	400	50n								1 5	1 3 △	30u	04m	100	320	100p		200S	Si	A1r
106	PD2708	400	50n															40			DO5
107▼	DSR5402	400	75n⊘	1.0			1 0				3.0	1 1 △	5.0u	100u	100	400		4 0			A196f
108	1N4825	400 †	100n	1							1 0m	1.3		1 0m	50	400		1	170	Si	DO13

SYMBOLS AND CODES EXPLAINED IN INTERPRETER

4. SWITCHING DIODES

IN ORDER OF (1) PIV, (2) RECOVERY TIME, and (3) TYPE No.

LINE No	3 TYPE No.	1 PIV (V)	RECOVERY TIME 2 Trr (s)	TEST CONDITIONS If (A)	Vr (V)	Zr (Ω)	Ir (A)	RL (Ω)	CKT	STORE TIME (s)	MIN. FORWARD CURRENT at 25°C IF (A)	at Vf (V)	MAX. REVERSE CURRENT Ir @25°C & Vr (A)	Ir at T & Vr (A)	TEMP T (°C)	TEST VOLT Vr (V)	CAP. at ZERO VOLTS (F)	ABSOLUTE MAX RATING AVG. FWD I (A)	MAX. TEMP (°C)	MAT.	DESCRIPTION DWG. No.
1♦	A28D	400 †	100n†	5 0			4 0				12	700mØΔ		8.0m	135C	100		12	175J	Si△	DO4Ø
2	AM602	400	100nØ	40m			40m†				300m	1 0	10u	.10m	150A	320	2.0pØ	250m	175A	Si△	DO7
3	AM612	400	100nØ	40m			40m†				300m	1 0	10u	10m	150A	320	4.0pØ	250m	175A	Si△	DO7
4	AM617	400	100nØ	40m			40m†				200m	1 0	10u	10m	150A	320	4 0pØ	200m	175A	Si△	DO7
5	AM617A	400	100nØ	40m			40m†				200m	1 0	10u	.10m	150A	320	2.0pØ	200m	175A	Si△	DO7
6	AM623	400	100nØ	40m			40m†				100m	1 0	10u	.10m	150A	320	4.0pØ	150m	175A	Si△	DO7
7	AM623A	400	100nØ	40m			40m†				100m	1 0	10u	10m	150A	320	2.0pØ	150m	175A	Si△	DO7
8	AM629	400	100nØ	40m			40m†				50m	1.0	10u	10m	150A	320	4.0pØ	150m	175A	Si△	DO7
9	AM629A	400	100nØ	40m			40m†				50m	1 0	.10u	10m	150A	320	2.0pØ	150m	175A	Si△	DO7
10	AM6170A	400	100nØ	40m			40m†				200mØ	1 0	10u	10m	150	320	4 0pØ	200m	125A	Si	M117*
11	AM6175A	400	100nØ	40m			40m†				200mØ	1 0	10u	.10m	150	320	4 0pØ	200m	125A	Si	M118*
12#	BYX61-400	400	100n	1 0	30			1 0			12	1 4 △	25u	3 0m	100C	400		12	150J	Si△	DO4
13#	BYX65-400	400	100n	1 0	30			1 0			30	1.5 △	80u	10m	100C	400		30	150J	Si△	DO5
14	388H	400	120n								1 0	1 1 △		1 0m	125	400		1.0 §	150	Si	DO15
15	A114D	400	140n								1 0	1 1 △	5 0u	300u	125J	400			125J	Si	A94g
16♦	1N4944	400	150nØ	1 0			250m				1 0	1 3 △		500u	175A	400	35pØ	2 0 §	175A	Si	A1tc
17♦	JAN1N4944	400 †	150nØ	500m			1.0				1 0	1.3 △	1 0u	200u	150A	400	35p†Ø	1 0 §	175A	Si	A1tc
18	1N5418	400	150nØ	500m			1.0							2.0m	175A	400	120pØ		175A	Si	A248
19	JAN1N5418	400	150n	500m			1.0		△		3 0	1 3 △	1.0u	20u	100A	400	165pØ	2 0 §	200A	Si	A248a
20♦	1N5617	400	150nØ	1 0			250m				1 0	1.2 △	500n	25u	100A	400	35pØ	1.0	200A	Si	A109c
21	JAN1N5617	400	150n	500m			1.0				1 0	1 2 △	500n	25u	100A	400		1.0	200A	Si	A248e
22	RAB040	400	150n	500m			1.0				3 0	1 3	15u	300u	100	400		3.0 §	150A	Si	A1ez
23	RIB040	400	150nØ	50			1 0				3 0	1.3 △	15u	500u	100A	400		3 0	175J	Si	A1eu
24	RL040	400	150n	500m							1	1.3 △	2 0u	.10m	100	400		1	150A	Si	A3c
25	SCBR4F	400	150n	500m			1		△		1 0	1.3 △	20u△	.06m△	125A	400		1 5	150A	Si	
26	SCT4	400	150nØ	500m			1 Ø				1	1.3	1 0u	.03m	125	400	35p†Ø		175J	Si	A1ch
27	SF4	400	150n	500m			1				1	1.3	10u	03m	125	400	30p†	1	175J	Si	A1bs
28	1N3878	400 †	200n†	1	30		2				6	1 4		1 0m	100C	40		6	100C	Si	DO10
29	JAN1N3878	400	200nØ	1	30		2				6	1.4 △	15u	1.0m	100A	400		6 §	150C	Si	DO10
30	1N3883	400 †	200n†	1	30		2				6	1.4	15u	3.0m	100C	400		6	150C	Si△	DO4
31	JAN1N3883,R	400	200nØ	1	30		2				6	1 4 △	15u	1.0m	100A	400		6 §	150C	Si	DO4Ø
32	1N3883R	400	200nØ	5 0	200		5 0				6 0	1 4 △	15u	1 0m	100C	400		6.0	150J	Si	DO4
33	1N3888	400	200nØ	1	30						12	1 4			100	400			175S	Si	DO10
34	JAN1N3888	400 †	200nØ	1	30		2				38	1 5 △	25u	3 0m	100C	400		12 §	150C	Si	DO10
35	1N3893	400	200n†Ø	1 0	30						12	1 4	25u	3 0m	100C	400		12	150C	Si	DO4Ø
36	JAN1N3893,R	400 †	200nØ	1	30		2				38	1 5 △	25u	3 0m	100C	300		12 §	150C	Si	DO4
37	1N3903	400 †	200n†	1	30		3						50u	6 0m	100C	400		20m	150C	Si△	DO5
38	1N3908	400	200nØ	1	30						20	1.4		6.0m	100	400			175S	Si△	DO11
39	1N3913	400 †	200n†	1	30		3						80u	10m	100C	400		30m	150C	Si△	DO5
40	JAN1N3913,R	400	200nØ	1 0	30						95	1.4 △	80u	10m	100C	400		30 §	150A	Si	DO5
41	1N4936	400	200nØ	1	30				△		1	1 2	5.0u	10m	100	50		1	150	Si	A1az
42#	MC44	400	200n	100m	30		100m				400m	1.0 △	2 0u	100u	100A	400		50	125A	Si△	DO7
43#	MC49	400	200nØ	100m			100m				250m	1 0 △	2.0u	100u	100A	400	35pØ	250m	125A	Si△	DO7
44	MR834	400	200nØ	1							3	1 1 △	50u	2 5m	100	400		3	150J	Si	A179a
45	PBR40	400	200nØ	50			1 0				3 0	1.2 △	25u					15	125C	Si	*
46	SCSDF4L	400	200n	500m			1 0				50	1 2 △	13u	500u	100A	400		50	150A	Si	M493
47	SCSDF4W	400	200n	500m			1 0				50	1 2 △	13u	500u	100A	400		50	150A	Si	M492
48	SCSF4	400	200n	500m			1 0				100	1.2 △	25u	1.0m	100A	400		100	150A	Si	S305Ø
49	SCSNF4L	400	200n	500m			1 0				50	1 2 △	13u	500u	100A	400		50	150A	Si	M493
50	SCSNF4W	400	200n	500m			1 0				50	1 2 △	13u	500u	100A	400		50	150A	Si	M492
51	SCSPF4L	400	200n	500m			1 0				50	1 2 △	13u	500u	100A	400		50	150A	Si	M493
52	SCSPF4W	400	200n	500m			1 0				50	1 2 △	13u	500u	100A	400		50	150A	Si	M492
53#	SF4AN6	400 †	200n	6 0							6 0	1 0		2.0m	125B	400	6.0		150S	Si	DO4Ø
54#	SF4AN12	400 †	200n	10							10	1 0		2 0m	125B	400	10		150S	Si	DO4Ø
55#	SF4CN1	400 †	200n	1 0							1 0	1 2	10u	250u	125B	400		1 0	125B	Si	A31n
56	TFR140	400	200nØ	1 0m					†		1 0	1 2 △		1.0m	150	400		1 0	175C	Si	Z34
57	TFR340	400	200nØ	1 0m					†		3 0	1 2 △		2.0m	150	400		3 0	175C	Si	Z34
58	TFR640	400	200nØ	1 0m					†		6 0	1 2 △		3.0m	150	400		6 0	175C	Si	Z34
59	TFR1240	400	200nØ	1 0m					†		12	1 2 △		4.0m	150	400		12	175C	Si	Z34
60	VYA400X	400 †	200nØ	1 0			2 0	30			10 $	1.2		5.0m	100C	400		25	150J	Si△	Z62*
61	VYB400X	400 †	200nØ	1 0			2 0	30			10 $	1 2		5.0m	100C	400		25	150J	Si△	Z62*
62	VYC400X	400 †	200nØ	1 0			2 0	30			10 $	1 2		5.0m	100C	400		25	150J	Si△	Z62*
63	VYD400X	400 †	200nØ	1 0			2 0	30			10 $	1 2		5.0m	100C	400		25	150J	Si△	Z62*
64	VYE400X	400 †	200nØ	1 0			2 0	30			10 $	1 2		5.0m	100C	400		13	150J	Si△	Z62*
65	VYF400X	400 †	200nØ	1 0			2 0	30			10 $	1 2		5.0m	100C	400		13	150J	Si△	Z62*
66	VYG400X	400 †	200nØ	1.0			2 0	30			10 $	1 2		5 0m	100C	400		13	150J	Si△	Z62*
67	JAN1N5188	400	250n	500m			1 0				9 0	1 5 △	2 0u	100u	100	400	230pØ	3.0	175A	Si	A1dg
68▼	1N5188A	400	250nØ	1 0			1 0				4 0	1 1 △	2 0u	80u	100	400	200p	4 0	175A	Si	A146p
69▼	DSR1066	400	250nØ	1 0			1 0				500m	1 2 △	1 0u	50u	100	400		2.0			A266
70#	FR4001	400	250nØ	100m			100m				1 0	1 3 △		200u	100A	400		1 0	150A	Si△	DO13
71	SLA5200HF	400	250nØ	500m			1 0				3 0	1 0 △	5 0u	100u	100	400		3 0 §	175A	Si△	A31n
72	RS40	400	300n	1	30		3				6	1 4 △	15u	3.0m	100C	400		6	150C	Si	DO4
73	RT40	400	300n	1	30		1 4m				12	1 4 △	25u	5 0m	100C	400		12	150C	Si	DO4
74	RTC40	400	300nØ	1 0	30		2 0				20	1 2 △	25u					40	175C	Si	M446*Ø
75#	UFSD1	400	300n	2 0m	15		70m	600			200m	2 5 △	10u			400		130m	100J	Si	A221f
76	UTR2340	400	300n	1			1 Ø				2	1 1	5 0u	10m	150	400	240p	2	175	Si	A146m
77	UTR3340	400	300n	1			1 Ø				3	1 1	5 0u	.10m	150	400	240p	3	175	Si	A146m
78#	BYX30/400	400	350nØ	2 0	30		2 0				50	3 2 △		4.0m	125J	400			150J	Si	DO4Ø
79#	BYX46-400	400	350n	2	30		2				50	2 0 △		4.0m	125J	400		15 §	165J	Si	DO4Ø
80	UTR40	400	350nØ	10m			10mØ				200m	1 1	3 0u	.10m	100A	400	60pØ	.50m	175A	Si	A146f
81	UTR41	400	350nØ	10m			10mØ				500m	1 1	3.0u	10m	100A	400	60pØ	1	175A	Si	A146f
82#	BA157	400	500nØ	10m			10m				1 0	1 5	5 0u	100u	125A	400			150J	Si△	A1bg
83#	RPX400	400	500nØ	1 0	30						1.0	1 5 △	3.0u					1 0	150A		A31a
84	UTR4440	400	500nØ	1 0			1.0		△		4 0m	1 1	10u	300u	100	400		6.0m	175A	Si	S277Ø
85	UTR5440	400	500nØ	1			1		△		5.0m	1 1	10u	.30m	100	400		7 5m	175A	Si	S277Ø
86	UTR6440	400	500nØ	1			1		△		6 0m	1 1	10u	30m	100	400		9 0m	175A	Si	S277Ø
87▼#	BAW85	400	700nØ	10m			10m				100m	1 1 △	30n				3 5pØ				DO35
88▼#	BYX59-400	400	700nØ	50	30						250	1 8 △		18m	125J	400		40 §	125C	Si△	S72n
89#	HFSD1	400	800n	2.0m	15		70m	600			500m	1 2 △	10u			400		300m	100J	Si	A221f
90#	ER4	400	1 0u	100m			100m				1.0	1.3 △		200u	100A	400		1 0		Si	A1em
91	SCBR4M	400	1 0u	500m			1		△		1 0	1 3 △	20u△	06m△	125A	400		1 5	150A	Si	
92♦#	SR1HM8	400	1 0u	10m			10m				500m	1 4 △	10u	300u	100J	400		400m§	100J	Si§	A1bv
93	1N3961C	400	1.5u	10										400u	150A	400			165A	Si	DO4
94	101KL40S15	400 †	1 5uØ	315			30				315	1 4		15mØ	120C	400		100 §	175J	Si	DO8Ø
95♦	401PDL40S15	400 †	1 5uØ	1 2k			30				1 2k	2 0 △		15mØ	95C	400		400 §	175J	Si△	J200a
96	1N5551	400	2 0uØ	500m			250m				3.0	1 0 △Ø	1 0u	25u	100A	400	120p†Ø	3 0 §	200A	Si	A248a
97♦	1N5616	400	2 0uØ	1.0			250m				1 0	1 2 △	500n	25u	100A	400	35pØ	1.0	200A	Si	A109c
98	JAN1N5616	400	2 0u	500m			1 0				1 0	1 2 △	500n	25u	100A	400		1.0	200A	Si	A248e
99	101KL40S20	400 †	2.0uØ	315			35				315	1 4		15mØ	120C	400		100 §	175J	Si	DO8Ø
100♦	401PDL40S20	400 †	2 0uØ	1.2k			35				1.2k	2.0 △		15mØ	95C	400		400 §	175J	Si△	J200a
101▼	G1G	400	2 0u	500m			1 0				1 0	1 0 △	2 0u	100u	100J	400	14p	1.0 §	175A		A94j
102▼	G2G	400	2.0u	500m			1 0				2.0	1 2 △	500n	10u	100J	400	14p	2.0 §	175A		A94j
103#	SX645	400	2 0uØ								100m	1 5	500n	15u	100	400	5 0p†	200m	150A	Si*	C6
104#	2912	400 *	2.5uØØ	30m	5 0	50K			Ø		100m	3.0	5 0u			400			150J	Si*	A1kr
105	1N3961	400	3.0uØ	10	50	250	900k				1 2m	500m		400u	150	400		3 5	165B	Si	DO4
106	JAN1N5551	400	3.0u	500m			1 0				3 0	1 0 △	1.0u	20u	100A	400		3.0	200A	Si	A248b
107▼	G3G	400	3 0u	500m			1 0				3.0	1.0 △	2 0u	100u	100J	400	3 0p	3.0 §	175A		A94m
108#	F400	400	4 0uØ	20m			2 0m		Ø		300m	1 2 △	1.0u		25A	400		300m§	125A	Si	DO29
109	MC005	400 Ø	4 0uØ	5 0m	40				△		400m	1 0 △	10n	1.0u	150	375		200m	175A	Si	A2a
110#	SF4GR315	400	4 5u†	250			25m				250	775mØ		25m		400				Si△	M522

SYMBOLS AND CODES EXPLAINED IN INTERPRETER

4. SWITCHING DIODES

IN ORDER OF (1) PIV, (2) RECOVERY TIME, and (3) TYPE No.

LINE No.	3 TYPE No.	1 PIV (V)	RECOVERY TIME 2 Trr (s)	TEST CONDITIONS If (A)	Vr (V)	Zr (Ω)	Ir (A)	RL (Ω)	CKT	STORE TIME (s)	MIN. FORWARD CURRENT at 25°C IF (A)	at Vf (V)	MAX. REVERSE CURRENT Ir @25°C & Vr (A)	Ir at T & Vr (A)	TEMP T (°C)	TEST VOLT Vr (V)	CAP. at ZERO VOLTS (F)	ABSOLUTE MAX RATING AVG. FWD I (A)	MAX. TEMP (°C)	DESCRIPTION MAT.	DWG. No.
1#	SF4HR315	400	4.5u†	250			25m				250	775m∅		25m		400				Si△	M523
2	JAN1N4246	400 †	5.0u☑	500m			1 0				1.0m	1 3 △	1.0u	150u	150A	400		1.0 §	175A	Si	A1tc
3	JAN1N5625	400 †	5.0u☑	500m			1 0				3.5	1 0 △	1.0u	100u	150A	400		2.5 §	200A	Si	A248j
4#	1SB40	400	5.0u								1 0	2 5 △		200u	100J	400		1 0 §	150S		M562
5#	2504	400	5.0u☑	20m			2 0m				1 8	1.5	10u			400	40p	600m	150J	Si	A9h
6#	2604	400	5.0u☑	20m			2 0m				7 5	1 8	10u			400	40p	25	50J	Si	S87e
7#	2614	400	5.0u	20m			2 0m				15	1 8	10u			400	100p	50	50J	Si	S87e
8	1N4155	400 †	10u	30m	35		90u∅	2 0k	△		100m	1 0	100n	25u	100	400		200m	150	Si	DO7
9#	D1-400	400	10u	10	200						1 0	1 0 △	10u		25J	400	100p*	1.0 §	175J	Si	A1ea
10#	DA1-400	400	10u	10	200						1 0	1 0 △	10u		25J	400		1 0 §	145J	Si	A1ea
11#	MSR40	400	20u	20m			1 0m		☑		1 0	1.2 △		5.0u		400	30p	1.5 §	150A	Si	DO27
12#	PL4004	400 †	20u	20m			1 0m		☑		1.0	1.2 △	5.0u			400	30p	1.5 §	150A	Si△	DO27
13	CB40F	400	250m	500m			1 0				750m	1.3 △	5 0u	150u	100	400		750m§	150A	Si	A1bg
14	MB218	425	300n	5 0m	40	100K					1.2	1.3 △	1 0u	10m	100	345	10p	15	75A	Si	A60f
15	MB225	425	300n	5.0m	40	100K					850m	1.3 △	3 0u	.50m	100	345	10p	15	75A	Si	A60f
16	MT204	425	300n	5.0m	40	250		100k			500m	1 0	1 0u	100m	100A	385	6.0p				A60e
17	MT211	425	300n	5 0m	40	250		100k			250m	1 0	3.0u	500m	100A	345	6.0p				A60e
18	1N5188	440	300n☑	1			1				3	1 1 △	5 0u	10m	100A	400	240p	3	175A	Si	A146e
19#	MR41	450	1 0u	100m			100m				30m	1 0 △	2 0u				35p☑	30m	125A	Si△	DO7
20	MC1550	500	50n								1 5	1.3 △	.30u	04m	100	400	100p		200S	Si	A1r
21	AM601	500	100n☑	40m			40m†				300m	1 0	.10u	.10m	150A	400	2.0p☑	250m	175A	Si△	DO7
22	AM611	500	100n☑	40m			40m†				300m	1 0	10u	10m	150A	400	4.0p☑	250m	175A	Si△	DO7
23	AM616	500	100n☑	40m			40m†				200m	1 0	10u	.10m	150A	400	4 0p☑	200m	175A	Si△	DO7
24	AM616A	500	100n☑	40m			40m†				200m	1 0	.10u	.10m	150A	400	2.0p☑	200m	175A	Si△	DO7
25	AM622	500	100n☑	40m			40m†				100m	1.0	10u	.10m	150A	400	4.0p☑	150m	175A	Si△	DO7
26	AM622A	500	100n☑	40m			40m†				100m	1.0	.10u	.10m	150A	400	2 0p☑	150m	175A	Si△	DO7
27	AM628	500	100n☑	40m			40m†				50m	1.0	.10u	.10m	150A	400	4 0p☑	150m	175A	Si△	DO7
28	AM628A	500	100n☑	40m			40m†				50m	1 0	10u	.10m	150A	400	2.0p☑	150m	175A	Si△	DO7
29	388K	500	120n								1 0	1.1 △		1.0m	125	500		1.0 §	150	Si	DO15
30	A114E	500	140n								1 0	1.1 △	5 0u	200u	125J	500			125J	Si	A94g
31♦	1N4945	500	150n☑	1 0			250m				1 0	1.3 △		500u	175A	500	30p☑	2.0 §	175A	Si	A1tc
32	SCT5	500	150n☑	500m			1				1	1 3	1.0u	.03m	125	500	30p†☑		175J	Si	A1ch
33	SF5	500	150n	500m			1				1	1 3	10u	.03m	125	500	25p†	1	175J	Si	A1bs
34	424K	500	200n								35	1.2 △		10m	100C	500		35 §	150C	Si	DO5
35	425K	500	200n								20	1.2 △		6 0m	100C	500		20 §	150C	Si	DO5
36	479K	500 †	200n†	1	30		2				12	1 4		10m	150C	500		12	175J	Si△	DO4
37#	MC45	500	200n	100m	30		100m				400m	1.0 △	2.0u	100u	100A	500		.50	125A	Si△	DO7
38#	MC50%	500	200n☑	100m			100m				250m	1 0 △	2 0u	100u	100A	500	35p☑	250m	125A	Si△	DO7
39#	MR52Z	500	200n☑	100m			100m				200m	1.0 △	2.0u	100u	100A	500	35p☑	200m	125A	Si△	DO7
40#	MR54Z	500	200n☑	100m			100m				400m	1.0 △	2.0u	100u	100A	500	35p☑	400m	125A	Si△	DO7
41	S1N5419	500	200n	500m			1.0				3 0	1.2 △	150n	100u	150	500		3.0 §	200A	Si	A248d
42#	SF5AN6	500 †	200n	6.0							6 0	1 0		2.0m	125B	500	6.0		150S	Si	DO4☑
43#	SF5AN12	500 †	200n	10							10	1.0		2.0m	125B	500		10	125B	Si	DO4
44#	SF5AR12	500 †	200n	10							10	1.0		2 0m	125B	500		10	125B	Si	DO4
45#	SF5CN1	500 †	200n	1 0							1 0	1 2	10u	250u	125B	500		1.0	125B	Si	A31n
46▼	1N5189A	500	250n☑	1 0			1.0				4.0	1.1 △	2 0u	80u	100	500	160p	4.0	175A	Si	A146p
47	1N5419	500	250n☑	500m			1.0							2.0m	175A	500	110p☑		175A	Si	A248
48	JAN1N5419	500	250n	500m			1.0		△		3.0	1 3 △	1 0u	20u	100A	500	140p☑	2.0 §	200A	Si	A248a
49▼	DSR1067	500	250n☑	1 0			1.0				500m	1.2 △	1.0u	50u	100	500		2.0			A266
50	RS50	500	300n	1	30		3				6	1.4 △	15u	3.0m	100C	500		6	150C	Si	DO4
51#	BYX30/500	500	350n☑	2 0	30		2.0				50	3.2 △		4.0m	125J	500			150J	Si	DO4☑
52#	BYX46-500	500	350n	2	30		2				50	2.0 △		4.0m	125J	500		15 §	165J	Si	DO4☑
53	UTR2350	500	350n	1			1 ☑				2	1.1	5.0u	.10m	150	500	200p	2	175	Si	A146m
54	UTR50	500	400n☑	10m			10m☑				200m	1 1	3.0u	.10m	100A	500	50p☑	.50m	175A	Si	A146f
55	UTR51	500	400n☑	10m			10m☑				500m	1 1	3 0u	.10m	100A	500	50p☑	1	175A	Si	A146f
56	UTR52	500	400n☑	10m			10m☑				1	1 1	3 0u	.10m	100A	500	50p☑	2	175A	Si	A146f
57▼#	BYX59-500	500	700n☑	50	30						250	1 8 △		15m	125J	500		40 §	125C	Si△	S72n
58	1N3962C	500	1.5u	10										400u	150A	500			165A	Si	DO4
59#	1S1238	500	1.8u☑	10m	6.0		250u	2.0k			10m	4.0		1.2m	75J	500		10m	125J	Si	A50d
60	1N3962	500	3.0u☑	10	50	250K	900m				1.2m	.50		.40m	150	500		3.5	165B	Si	DO4
61#	SF5GR315	500	4.5u†	250			25m				250	775m∅		25m		500				Si△	M522
62#	SF5HR315	500	4.5u†	250			25m				250	775m∅		25m		500				Si△	M523
63	MB219	525	400n	5 0m	40	100k					1.2	1.3 △	1 0u	100u	100	435	10p	1.5	175A	Si	A60f
64	MB226	525	400n	5 0m	40	100k					850m	1.3 △	3 0u	500u	100	435	10p	1.5	175A	Si	A60f
65	MT205	525	400n	5.0m	40	250k		100k			500m	1 0	1.0u	100m	100A	435	6.0p				A60e
66	MT212	525	400n	5.0m	40	250k		100k			250m	1 0	3.0u	500m	100A	435	6.0p				A60e
67	1N5189	550	350n☑	1			1				3	1 1 △	5.0u	.10m	100A	500	200p	3	175A	Si	A146e
68	SCSDM6L	600	2.0n	500m			1 0				50	1 1 △	13u	500u	100A	600		50	150A	Si	M493
69	SCSDM6W	600	2.0n	500m			1.0				50	1 1 △	13u	500u	100A	600		50	150A	Si	M492
70	SCSM6	600	2.0n	500m			1.0				100	1 1 △	25u	1.0m	100A	600		100	150A	Si	S305☑
71	SCSNM6L	600	2 0n	500m			1.0				50	1 1 △	13u	500u	100A	600		50	150A	Si	M493
72	SCSNM6W	600	2.0n	500m			1 0				50	1 1 △	13u	500u	100A	600		50	150A	Si	M492
73	SCSPM6L	600	2.0n	500m			1 0				50	1 1 △	13u	500u	100A	600		50	150A	Si	M493
74	SCSPM6W	600	2 0n	500m			1.0				50	1 1 △	13u	500u	100A	600		50	150A	Si	M492
75▼	DSR5601	600	50n☑	1 0			1.0				4.0	1.2 △	5.0u	100u	100	600		4.0			A196f
76▼	DSR5602	600	75n☑	1 0			1.0				3.0	1.1 △	5.0u	100u	100	600		4.0			A196f
77	1N4826	600 †	100n	1.0							1.0m	1.3		1.0m	50	600		1	170	Si	DO13
78	AM610	600	100n☑	40m			40m†				300m	1 0	10u	.10m	150A	480	4.0p☑	250m	175A	Si△	DO7
79	AM615	600	100n☑	40m			40m†				200m	1.0	.10u	.10m	150A	480	4 0p☑	200m	175A	Si△	DO7
80	AM615A	600	100n☑	40m			40m†				200m	1.0	10u	.10m	150A	480	2.0p☑	200m	175A	Si△	DO7
81	AM621	600	100n☑	40m			40m†				100m	1.0	.10u	.10m	150A	480	4 0p☑	150m	175A	Si△	DO7
82	AM621A	600	100n☑	40m			40m†				100m	1 0	10u	.10m	150A	480	2 0p☑	150m	175A	Si△	DO7
83	AM627	600	100n☑	40m			40m†				50m	1 0	10u	.10m	150A	480	4.0p☑	150m	175A	Si△	DO7
84	AM627A	600	100n☑	40m			40m†				50m	1.0	.10u	.10m	150A	480	2.0p☑	150m	175A	Si△	DO7
85	388M	600	120n								1.0	1.1 △		1.0m	125	600		1.0 §	150	Si	DO15
86	A114M	600	140n								1.0	1.1 △	5 0u	200u	125J	600			125J	Si	A94g
87♦	JAN1N4946	600 †	150n☑	500m			1 0				1.0	1.3 △	1 0u	200u	150A	600	25p†☑	1.0 §	175A	Si	A1tc
88	RAB060	600	150n	500m			1 0				3 0	1 3	15u	300u	100	600		3.0 §	150A	Si	A1ez
89	RIB060	600	150n☑	50			1 0				3.0	1 3 △	15u	500u	100A	600		3.0	175J	Si	A1eu
90	RL060	600	150n	500m							1	1.3 △	2 0u	10m	100	600		1	150A	Si	A3c
91	SCBR6F	600	150n	500m			1		△		1.0	1.3 △	20u△	06m△	125A	600		1.5	150A	Si	
92	SF6	600	150n	500m			1				1	1 3	10u	.03m	125	600	20p†	1	175J	Si	A1bs
93	S1N4946	600	175n	500m			1 0				1 0	1.2 △	100n	50u	150	600		1.0 §	200A	Si	A248d
94	1N4937	600	200n☑	1	30				△		1	1.2	5.0u	.10m	100	50		1	150	Si	A1az
95	424M	600	200n								35	1 2 △		10m	100C	600		35 §	150C	Si	DO5
96	425M	600	200n								20	1 2 △		6.0m	100C	600		20 §	150C	Si	DO5
97	479M	600 †	200n†	1	30		2				12	1 4		10m	150C	600		12	175J	Si△	DO4
98#	BYX62-600	600	200n	1 0	30			1 0			12	1 4 △	25u	3.0m	100C	600		12	150J	Si△	DO4
99#	BYX63-600	600	200n	1.0	30			1.0			20	1.4 △	50u	6.0m	100C	600		20	150J	Si△	DO5
100#	BYX64-600	600	200n	1.0	30			1 0			30	1 4	50u	6.0m	100C	600		20	150J	Si△	DO5
101	ED8307	600	200n	1.0	30						6.0	1.4 △	15u	3.0m	100C	600		6.0	150A	Si	DO4☑
102	ED8310	600	200n	1.0	30						12	1.4 △	25u	5.0m	100C	600		12	150A	Si	DO4☑
103#	MR62Z	600	200n☑	100m			100m				200m	1.0 △	2.0u	100u	100A	600	35p☑	200m	125A	Si△	DO7
104#	MR64Z	600	200n☑	100m			100m				400m	1.0 △	2 0u	100u	100A	600	35p☑	400m	125A	Si△	DO7
105	MR836	600	200n☑	1							3	1.1 △	50u	2.5m	100	600		3	150J	Si	A179a
106	MR1366	600	200n☑	1	30				△		6	1.4 △	15u	1.0m	100	600		6	150J	Si	DO4
107	MR1376	600	200n☑	1	30				△		12	1.4 △	25u	3.0m	100	600		12	150J	Si	DO4
108	MR1386	600	200n☑	1	30				△		20	1.4 △	50u	6.0m	100	600		20	150J	Si	DO5
109	MR1396	600	200n☑	1	30				△		30	1.4 △	80u	10m	100	600		30	150J	Si	DO5
110	PBR60	600	200n☑	.50			1.0				3.0	1.2 △	25u					15	125C	Si	*

SYMBOLS AND CODES EXPLAINED IN INTERPRETER

4. SWITCHING DIODES

IN ORDER OF (1) PIV, (2) RECOVERY TIME, and (3) TYPE No.

LINE No.	3 TYPE No.	1 PIV (V)	2 RECOVERY TIME Trr (s)	TEST CONDITIONS If (A)	Vr (V)	Zr (Ω)	Ir (A)	RL (Ω)	CKT	STORE TIME (s)	MIN. FORWARD CURRENT at 25°C IF (A)	at Vf (V)	MAX. REVERSE CURRENT Ir @25°C & Vr (A)	Ir at T & Vr (A)	TEMP T (°C)	TEST VOLT Vr (V)	CAP. at ZERO VOLTS (F)	ABSOLUTE MAX RATING AVG. FWD I (A)	MAX. TEMP (°C)	MAT.	DESCRIPTION DWG. No.
1#	SF6AN6	600 †	200n	6.0							6 0	1.0		2 0m	125B	600			150S	Si	DO4∅
2#	SF6AN12	600 †	200n	10							10	1 0		2 0m	125B	600		10	125B	Si	DO4
3#	SF6AR12	600 †	200n	10							10	1.0		2.0m	125B	600		10	125B	Si	DO4
4♦	1N4946	600	250n∅	1.0			250m				1.0	1 3 △		500u	175A	600	25p∅	2.0 §	175A	Si	A1tc
5♦	1N5619	600	250n∅	1.0			250m				1.0	1.2 △	500n	25u	100A	600	25p∅	1 0	200A	Si	A109c
6	JAN1N5619	600	250n	500m			1.0				1.0	1 2 △	500n	25u	100A	600		1 0	200A	Si	A248e
7	CB60F	600	250n	500m			1 0				750m	1 3 △	5 0u	150u	100	600		750m§	150A	Si	A1bg
8▼	DSR1068	600	250n∅	1.0			1 0				500m	1 2 △	1.0u	50u	100	600		2 0			A266
9	SLA5201HF	600	250n∅	500m			1 0				3 0	1 0 △	5 0u	100u	100	600		3.0 §	175A	Si△	A31n
10▼	1N5190A	600	300n∅	1.0			1 0				4.0	1 1 △	2 0u	80u	100	600	120p	4 0	175A	Si	A146p
11#	BA158	600	300n∅	10m			10m				1.0	1.5	5 0u	100u	125A	600			150J	Si△	A1bg
12#	GR612	600	300n	1 0	30		2 0				12	1 4 △	25u	3.0m	100C	600		12 §		Si	S19g
13	RS60	600	300n	1	30		3				6	1.4 △	15u	3 0m	100C	600		6	150C	Si	DO4
14	RT60	600	300n	1	30		1 4m				12	1 4 △	25u	5.0m	100C	600		12	150C	Si	DO4
15#	UFSD1A	600	300n	2.0m	15		70m	600			200m	2 5 △	10u			600		130m	100J	Si	A221f
16#	BYX30/600	600	350n∅	2 0	30		2 0				50	3 2 △		4 0m	125J	600			150J	Si	DO4∅
17#	BYX46-600	600	350n	2	30		2				50	2 0 △		4 0m	125J	600		15 §	165J	Si	DO4∅
18	JAN1N5190	600	400n	500m			1 0				9.0	1 5 △	2 0u	100u	100	600	180p∅	3 0	175A	Si	A1dg
19	1N5420	600	400n∅	500m			1 0							2 0m	175A	600	100p∅		175A	Si	A248
20	JAN1N5420	600	400n	500m			1 0		△		3.0	1 3 △	1 0u	20u	100A	600	120p∅	2 0 §	200A	Si	A248a
21	SCSDF6L	600	400n	500m			1 0				50	1 2 △	13u	500u	100A	600		50	150A	Si	M493
22	SCSDF6W	600	400n	500m			1 0				50	1 0	13u	500u	100A	600		50	150A	Si	M492
23	SCSF6	600	400n	500m			1 0				100	1 2 △	25u	1.0m	100A	600		100	150A	Si	S305∅
24	SCSNF6L	600	400n	500m			1.0				50	1 2 △	13u	500u	100A	600		50	150A	Si	M493
25	SCSNF6W	600	400n	500m			1 0				50	1 2 △	13u	500u	100A	600		50	150A	Si	M492
26	SCSPF6L	600	400n	500m			1.0				50	1 2 △	13u	500u	100A	600		50	150A	Si	M493
27	SCSPF6W	600	400n	500m			1 0				50	1 2 △	13u	500u	100A	600		50	150A	Si	M492
28	UTR60	600	400n∅	10m			10m∅				200m	1 1	3 0u	10m	100A	600	40p∅	50m	175A	Si	A146f
29	UTR61	600	400n∅	10m			10m∅				500m	1 1	3 0u	10m	100A	600	40p∅	1	175A	Si	A146f
30	1N3729	600 ∅	500n∅	5 0m	40	80k		2 0k	△		5.0m	1.0	100n	5.0u	100	500	3.0p△∅		200S	Si	DO7
31#	BAY92	600	500n∅	10m			10m	100			100m	1.0	1.0u		25	600	4.0p∅	100m	150J	Si△	DO7
32#	BYX66-600	600	500n	1 0	30			1.0			12	1 5 △	25u	3 0m	100C	600		12	150J	Si△	DO4
33#	BYX67-600	600	500n	1.0	30			1 0			30	1 5 △	80u	10m	100C	600		30	150J	Si△	DO5
34#	RPX600	600	500n∅	1 0	30						1 0	1 5 △	3 0u					1 0	150A		A31a
35	RTC60	600	500n∅	1 0	30		2 0				20	1 2 △	25u					40	175C	Si	M446*∅
36#	HFSD1A	600	800n	2 0m	15		700u	600			500m	1 2 △	10u			600		300m	100J	Si	A221f
37#	E6HZS	600	1 0u	100m			100m				1 0	1.3 △		200u	100C	600		1 0		Si	A1em
38#	ER6	600	1 0u	100m			100m				1 0	1 3 △		200u	100A	600		1 0		Si	A1em
39	S1N4247	600	1 0u	500m			1 0				1 0	1 1 △	100n	.50u	150	600		1 0 §	200A	Si	A248d
40	S1N5201	600	1 0u	500m			1 0				3 0	1 0 △	150n	100u	150	600		3 0 §	200A	Si	A248d
41♦#	SR1HM12	600	1 0u	10m			10m				500m	1 4 △	10u	300u	100J	600		400m§	100J	Si§	A1bv
42	1N3963C	600	1 5u	10										400u	150A	600			165A	Si	DO4
43	101KL60S15	600 †	1 5u∅	315			30				315	1 4		15m∅	120C	600		100 §	175J	Si	DO8∅
44	251UL60S15	600 †	1.5u∅	785			30				785	1 6		16m∅	105C	600		250 §	175J	Si	DO9∅
45♦	401PDL60S15	600 †	1 5u∅	1 2k			30				1 2k	2 0 △		15m∅	95C	600		400 §	175J	Si△	J200a
46	1N5552	600	2 0u∅	500m			250m				3 0	1.0 △∅	1.0u	25u	100A	600	100pt∅	3.0 §	200A	Si	A248a
47♦	1N5618	600	2 0u∅	1 0			250m				1 0	1 2 △	500n	25u	100A	600	25p∅	1 0	200A	Si	A109c
48	JAN1N5618	600	2 0u	500m			1 0				1 0	1 2 △	500n	25u	100A	600		1.0	200A	Si	A248e
49	101KL60S20	600 †	2 0u∅	315			35				315	1 4		15m∅	120C	600		100 §	175J	Si	DO8∅
50	251UL60S20	600 †	2 0u∅	785			35				785	1 6		16m∅	105C	600		250 §	175J	Si	DO9∅
51♦	401PDL60S20	600 †	2 0u∅	1 2k			35				1 2k	2 0 △		15m∅	95C	600		400 §	175J	Si△	J200a
52▼	G1J	600	2.0u	500m			1 0				1 0	1 0 △	2 0u	100u	100J	600	14p	1 0 §	175A		A94j
53▼	G2J	600	2 0u	500m			1 0				2 0	1 2 △	500n	10u	100J	600	14p	2.0 §	175A		A94j
54#	2913	600 *	2 5u∅∅	30m	5.0	50K			∅		100m	4.5	5 0u			600			150J	Si*	A1ng
55	1N3963	600	3 0u∅	10	50	250K	900m				1 2m	50		40m	150	600		3 5	165B	Si	DO4
56	JAN1N5552	600	3 0u	500m			1 0				3 0	1 0 △	1 0u	20u	100A	600		3 0	200A	Si	A248b
57▼	G3J	600	3 0u	500m			1 0				3 0	1 0 △	2 0u	100u	100J	600	3 0p	3.0 §	175A		A94m
58#	F600	600	4 0u∅	20m			2 0m		∅		300m	1 2 △	1 0u		25A	600		300m§	125A	Si	DO29
59#	SF6GR315	600	4.5ut	250			25m				250	775m∅		25m		600				Si△	M522
60#	SF6HR315	600	4 5ut	250			25m				250	775m∅		25m		600				Si△	M523
61#	SF7GR315	600	4 5ut	250			25m				250	775m∅		25m		600				Si△	M522
62#	SF7HR315	600	4 5ut	250			25m				250	775m∅		25m		600				Si△	M523
63	JAN1N4247	600 †	5 0u∅	500m			1 0				1.0m	1.3 △	1 0u	150u	150A	600		1 0 §	175A	Si	A1tc
64	JAN1N5626	600 †	5 0u∅	500m			1 0				3 5	1 0 △	1 0u	100u	150A	600		2 5 §	200A	Si	A248j
65#	1SB60	600	5 0u								1 0	2 5 △		200u	100J	600		1 0 §	150S		M562
66#	2506	600	5 0u∅	20m			2 0m				1 8	1.5	10u			600	40p	600m	150J	Si	A9h
67#	2606	600	5 0u∅	20m			2 0m		∅		7 5	1 8	10u			600	40p	25	50J	Si	S87e
68#	D1-600	600	10u	10	200						1 0	1 0 △	10u		25J	600	100p*	1 0 §	175J	Si	A1ea
69#	DA1-600	600	10u	10	200						1 0	1 0 △	10u		25J	600		1 0 §	145J	Si	A1ea
70#	MSR60	600	20u	20m			1 0m		∅		1 0	1.2 △		5 0u		600	30p	1 5 §	150A	Si	DO27
71#	PL4005	600 †	20u	20m			1 0m		∅		1 0	1 2 △	5.0u			600	30p	1 5 §	150A	Si△	DO27
72	MB220	625	400n	5 0m	40	100k					1.2	1 3 △	1 0u	100u	100	530	10p	1.5	175A	Si△	A60f
73	MB227	625	400n	5.0m	40	100k					850m	1 3 △	3 0u	500u	100	535	10p	1 5	175A	Si	A60f
74	MT206	625	400n	5 0m	40	250k		100k			500m	1 0	1 0u	100m	100A	530	6 0p				A60e
75	MT213	625	400n	5 0m	40	250k		100k			250m	1.0	3.0u	500m	100A	525	6 0p				A60e
76	1N4320	640 †											1 0u			640	1 0pt		150A	Si	F27d
77	1N5190	650	400n∅	1			1				3	1 1 △	5 0u	.10m	100A	600	160p	3	175A	Si	A146e
78	1N5433	720	400n∅	10m			10m				2 0m	1 2 △	50u	100u	100A	600		2.0m	175A	Si	A146k
79	1N5434	720	400n∅	1 0			1 0				2 0m	1.1 △	50u	100u	100A	600		2 0m	175A	Si	A146k
80♦	1N4947	800	250n∅	1 0			250m				1 0	1.3 △		500u	175A	800	20p∅	2 0 §	175A	Si	A1tc
81♦	JAN1N4947	800 †	250n∅	500m			1.0				1 0	1 3 △	1 0u	200u	150A	800	10pt∅	1.0 §	175A	Si	A1tc
82▼	DSR1069	800	250n∅	1 0			1.0				500m	1.2 △	1 0u	50u	100	800		2 0			A266
83	RIB080	800	250n∅	50			1 0				3 0	1 3 △	15u	500u	100A	800		3.0	175J	Si	A1eu
84	RL080	800	250n	500m							1	1.3 △	2.0u	.10m	100	800		1	150A	Si	A3c
85	SLA5202HF	800	250n∅	500m			1 0				3 0	1 0 △	5.0u	100u	100	800		3 0 §	175A	Si△	A31n
86♦	1N5621	800	300n∅	1 0			250m				1 0	1 2 △	500n	25u	100A	800	20p∅	1.0	200A	Si	A109c
87	JAN1N5621	800	300n	500m			1 0				1 0	1 2 △	500n	25u	100A	800		1 0	200A	Si	A248e
88	ED8308	800	300n	1 0	30						6 0	1.4 △	15u	3 0m	100C	800		6.0	150A	Si	DO4∅
89	ED8311	800	300n	1.0	30						12	1.4 △	25u	5 0m	100C	800		12	150A	Si	DO4∅
90#	UFSD1B	800	300n	2.0m	15		.70m	600			200m	2.5	10u			800		130m	100J	Si	A221f
91#	BYX66-800	800	500n	1 0	30			1 0			12	1.5 △	15u	3.0m	100C	800		12	150J	Si△	DO4
92#	BYX67-800	800	500n	1 0	30			1.0			30	1 5 △	80u	10m	100C	800		30	150J	Si△	DO5
93#	RPX800	800	500n∅	1 0	30						1 0	1.5 △	3 0u					1 0	150A		A31a
94	RS80	800	500n	1 0	30		3 0				6 0	1.4 △	15u	3 0m	100C	800		6 0	150A	Si	DO4
95	RT80	800	500n	1	30		1 4m				12	1 4 △	25u	5.0m	100C	800		12	150C	Si	DO4
96	RTC80	800	500n∅	1 0	30		2 0				20	1 2 △	25u					40	175C	Si	M446*∅
97#	HFSD1B	800	800n	2 0m	15		70m	600			500m	1 2 △	10u			800		300m	100J	Si	A221f
98	SCBR8M	800	1.0u	500m			1		△		1 0	1.3 △	20u△	06m△	125A	800		1.5	150A	Si	
99♦#	SR1HM16	800	1.0u	10m			10m				500m	1 4 △	10u	300u	100J	800		400m§	100J	Si§	A1bv
100	101KL80S15	800 †	1.5u∅	315			30				315	1 4		15m∅	120C	800		100 §	175J	Si	DO8∅
101	251UL80S15	800 †	1.5u∅	785			30				785	1 6		16m∅	105C	800		250 §	175J	Si	DO9∅
102♦	401PDL80S15	800 †	1.5u∅	1 2k			30				1 2k	2 0 △		15m∅	95C	800		400 §	175J	Si△	J200a
103	1N5553	800	2.0u∅	500m			250m				3 0	1 1 △∅	1 0u	25u	100A	800	90pt∅	3.0 §	200A	Si	A248a
104♦	1N5620	800	2.0u∅	1 0			250m				1 0	1.2 △	500n	25u	100A	800	20p∅	1 0	200A	Si	A109c
105	JAN1N5620	800	2.0u	500m			1 0				1.0	1 2 △	500n	25u	100A	800		1 0	200A	Si	A248e
106	101KL80S20	800 †	2 0u∅	315			35				315	1 4		15m∅	120C	800		100 §	175J	Si	DO8∅
107	251UL80S20	800 †	2.0u∅	785			35				785	1 6		16m∅	105C	800		250 §	175J	Si	DO9∅
108♦	401PDL80S20	800 †	2.0u∅	1 2k			35				1 2k	2 0 △		15m∅	95C	800		400 §	175J	Si△	J200a
109▼	G1K	800	2 0u	500m			1 0				1 0	1 0 △	2 0u	100u	100J	800	14p	1 0 §	175A		A94j
110▼	G2K	800	2.0u	500m			1 0				2 0	1 2 △	500n	10u	100J	800	14p	2 0 §	175A		A94j

SYMBOLS AND CODES EXPLAINED IN INTERPRETER

4. SWITCHING DIODES

IN ORDER OF (1) PIV, (2) RECOVERY TIME, and (3) TYPE No.

LINE No	3 TYPE No	1 PIV (V)	2 RECOVERY TIME Trr (s)	TEST CONDITIONS If (A)	Vr (V)	Zr (Ω)	Ir (A)	RL (Ω)	CKT	STORE TIME (s)	MIN. FORWARD CURRENT IF (A)	at 25°C at Vf (V)	MAX. REVERSE CURRENT Ir @25°C & Vr (A)	Ir at T & Vr (A)	TEMP T (°C)	TEST VOLT Vr (V)	CAP. at ZERO VOLTS (F)	ABSOLUTE MAX RATING AVG. FWD I (A)	MAX. TEMP (°C)	DESCRIPTION MAT.	DWG No.
1	JAN1N5553	800	3 0u	500m			1 0				3.0	1 1 Δ	1 0u	20u	100A	800		3 0	200A	Si	A248b
2▼	G3K	800	3 0u	500m			1.0				3 0	1 0 Δ	2 0u	100u	100J	800	3 0p	3 0 §	175A		A94m
3#	SF8GR315	800	4 5ut	250			25m				250	775mØ		25m		800				Si△	M522
4#	SF8HR315	800	4 5ut	250			25m				250	775mØ		25m		800				Si△	M523
5	JAN1N4248	800 †	5.0uØ	500m			1.0				1 0m	1.3 Δ	1.0u	150u	150A	800		1 0 §	175A	Si	A1tc
6	JAN1N5627	800 †	5 0uØ	500m			1 0				3 5	1.0 Δ	1.0u	100u	150A	800		2 5 §	200A	Si	A248j
7#	1SB80	800	5 0u								1 0	2.5 Δ		200u	100J	800		1 0 §	150S		M562
8	MPN3208	800	6.0u	150m			75m				10m	650m	3 0n	1.3u	125	500	1.1p		125J	Si	M465a
9#	D1-800	800	10u	10	200						1 0	1 0 Δ	10u		25J	800	100p*	1.0 §	175J	Si	A1ea
10#	MSR80	800	20u	20m			1 0m		Ø		1 0	1.2 Δ		5 0u		800	30p	1 5 §	150A	Si	DO27
11#	PL4006	800 †	20u	20m			1.0m		Ø		1.0	1.2 Δ	5.0u			800	30p	1 5 §	150A	Si△	DO27
12	CB80F	800	250m	500m			1 0				750m	1 3 Δ	5 0u	150u	100	800		750m§	150A	Si	A1bg
13	SF8	850	250n	500m			1				1	1.3	.10u	03m	125	800	15pt	1	175J	Si	A1bs
14#	2914	900	2.5uØØ	30m	5 0				Ø		100m	6.0	5 0u			800			150J	Si*	A1pc *
15#	SF9GR315	900	4 5ut	250			25m				250	775mØ		25m		900				Si△	M522
16#	SF9HR315	900	4 5ut	250			25m				250	775mØ		25m		900				Si△	M523
17	MPN3209	900	6.0u	150m			75m				10m	650m	3.0n	1 3u	125	500	1 1p		125J	Si	M465a
18♦	SFM10	1 0k	100n	12m			25m				25m	5.0 Δ	100n	12m	100	1.0k		25m§	150A	Si	A1ru
19	AM1010A	1.0k	150n	100m			100mt				200m	2 0	1 0u	150u	150	1 0k	3.0pØ	200m	200S	Si△	C42g
20	S010G	1 0k	200nØ	1.0m			1 0m	1k			50	10 Δ	25n	20u	150	1 0k	.50p	50m	150A	Si	A1fd
21	CB100F	1 0k	250n	500m			1 0				750m	1 3 Δ	5 0u	150u	100	1 0k		750m§	150A	Si	A1bg
22	RIB100	1 0k	250nØ	50			1 0				3.0	1 3 Δ	15u	500u	100A	1 0k		3 0	175J	Si	A1eu
23	RL100	1.0k	250n	500m							1.0	1 3 Δ	2 0u	100n	100	100		1.0	150A	Si	A3c
24	S1N4948	1.0k	250n	500m			1 0				1.0	1 2 Δ	100n	50u	150	1.0k		1.0 §	200A	Si	A248d
25	SLA5203HF	1.0k	250nØ	500m			1 0				3.0	1.0 Δ	5.0u	100u	100	1.0k		3 0 §	175A	Si△	A31n
26▼	100KF10	1 0k	300n	2 0m			2 0m		Ø		100m	3 0	1.0u	20u	75	1 0k		100m	150S	Si	DO7
27	ED8309	1.0k	300nØ	1.0	30		3.0				6.0	1 4 Δ	15u	3 0m	100C	1.0k		6 0	150C	Si	DO4Ø
28	ED8312	1.0k	300nØ	1.0	30		3.0				12	1.4 Δ	25u	3.0m	100C	1.0k		12	150C	Si	DO4Ø
29▼	TNF10	1.0k	300n	2.0m			2 0m		Ø		15m	3 0	30n	15u	75	1.0k	2.0p	15m	150S	Si	A109b
30#	UFSD1C	1 0k	300n	2.0m	15		7 0u	600			200m	2.5 Δ	10u			1.0k		130m	100J	Si	A221f
31	VA10X	1.0k	300nØ	2.0m			2 0m		Ø		40m	6.0	.30u	.06m	100	1.0k		40m	150	Si△	A1m
32	VB10X	1 0k	300nØ	2 0m			2 0m		Ø		50m	6 0	.30u	.06m	100	1 0k		50m	150	Si△	A1fc
33▼	3DF10	1 0k	350n	2 0m			4 0m				30m	3.0 Δ	20n	5.0u	75	1.0k	2 0pØ	30m	150S	Si	A109d
34♦	1N4948	1 0k	500nØ	1 0			250m				1.0	1 3 Δ		500u	175A	1 0k	15pØ	2 0 §	175A	Si	A1tc
35♦	JAN1N4948	1 0kt	500nØ	500m			1 0				1.0	1 3 Δ	1 0u	200u	150A	1 0k	15ptØ	1.0 §	175A	Si	A1tc
36♦	1N5623	1 0k	500nØ	1 0			250m				1.0	1 2 Δ	500n	25u	100A	1 0k	15pØ	1.0	200A	Si	A109c
37	JAN1N5623	1 0k	500n	500m			1 0				1.0	1 2 Δ	500n	25u	100A	1.0k		1.0	200A	Si	A248e
38	AM1010	1.0k	500n	100m			100mt				200m	2 0	1 0u	150u	150	1 0k	3.0pØ	200m	200S	Si△	C42g
39#	BA159	1.0k	500nØ	10m			10m				1 0	1 5	5.0u	100u	125A	1 0k			150J	Si△	A1bg
40#	BYX66-1000	1.0k	500n	1 0	30			1 0			12	1.5 Δ	25u	3.0m	100C	1.0k		12	150J	Si△	DO4
41#	BYX67-1000	1.0k	500n	1.0	30			1 0			30	1 5 Δ	80u	10m	100C	1.0k		30	150J	Si△	DO5
42	RS100	1.0k	500n	1 0	30		3 0				6.0	1.4 Δ	15u	3.0m	100C	1.0k		6 0	150C	Si	DO4
43	RT100	1 0k	500n	1.0	30		1 4m				12	1.4 Δ	25u	5.0m	100C	1 0k		12	150C	Si	DO4
44	SF10	1 0k	500n	500m			1 0				1.0	1.3	100n	30u	125	1.0k	10pt	1.0	175J	Si	A1bs
45#	HFSD1C	1 0k	800n	2.0m							500m	1 2 Δ	10u			1.0k		300m	100J	Si	A221f
46	S1N4249	1 0k	1.0u	500m			1 0				1.0	1 1 Δ	100n	50u	150	1.0k		1 0 §	200A	Si	A248d
47	SCBR10M	1 0k	1 0u	500m			1.0		Δ		1.0	1 3 Δ	200nΔ	60uΔ	125A	1 0k		1 5	150A	Si	
48	101KL100S15	1 0kt	1.5uØ	315			30				315	1.4		15mØ	120C	1 0k		100 §	175J	Si	DO8Ø
49	251UL100S15	1.0kt	1 5uØ	785			30				785	1 6		16mØ	105C	1.0k		250 §	175J	Si	DO9Ø
50	1N5554	1 0k	2 0uØ	500m			250m				3 0	1.1 ΔØ	1.0u	25u	100A	1 0k	85ptØ	3 0 §	200A	Si	A248a
51♦	1N5622	1 0k	2 0uØ	1 0			250m				1.0	1 2 Δ	500n	25u	100A	1.0k	15pØ	1.0	200A	Si	A109c
52	JAN1N5622	1 0k	2 0u	500m			1 0				1.0	1 2 Δ	500n	25u	100A	1.0k		1.0	200A	Si	A248e
53	101KL100S20	1 0kt	2 0uØ	315			35				315	1.4		15mØ	120C	1.0k		100 §	175J	Si	DO8Ø
54	251UL100S20	1 0kt	2.0uØ	785			35				785	1 6		16mØ	105C	1.0k		250 §	175J	Si	DO9Ø
55♦	401PDL100S20	1 0kt	2 0uØ	1.2k			35				1.2k	2 0 Δ		15mØ	95C	1 0k		400 §	175J	Si△	J200a
56▼	G1M	1 0k	2 0u	500m			1 0				1.0	1.0 Δ	2 0u	100u	100J	1 0k	14p	1 0 §	175A		A94j
57▼	G2M	1.0k	2 0u	500m			1 0				2 0	1 2 Δ	500n	10u	100J	1.0k	14p	2.0 §	175A		A94j
58	MPR10	1.0k	2 5u								500m	1 8 Δ	5.0u	200u	175J	1.0k		500m	100A		
59	JAN1N5554	1.0k	3 0u	500m			1 0				3.0	1 1 Δ	1.0u	20u	100A	1.0k		3.0	200A	Si	A248b
60▼	G3M	1 0k	3 0u	500m			1.0				3.0	1.0 Δ	2.0u	100u	100J	1 0k	3.0p	3 0 §	175A		A94m
61#	SF10GR315	1 0k	4 5ut	250			25m				250	775mØ		25m		1.0k				Si△	M522
62#	SF10HR315	1.0k	4 5ut	250			25m				250	775mØ		25m		1.0k				Si△	M523
63	JAN1N4249	1.0kt	5 0uØ	500m			1 0				1 0m	1 3 Δ	1.0u	150u	150A	1 0k		1 0 §	175A	Si	A1tc
64#	1SB100	1.0k	5.0u								1 0	2 5 Δ		200u	100J	1 0k		1 0 §	150S		M562
65#	D1-1000	1 0k	10u	10	200						1 0	1.0 Δ	10u		25J	1 0k	100p*	1.0 §	145J	Si	A1ea
66#	MSR100	1.0k	20u	20m			1 0m		Ø		1 0	1 2 Δ		5 0u		1.0k	30p	1.5 §	150A	Si	DO27
67#	PL4007	1 0kt	20u	20m			1 0m		Ø		1 0	1 2 Δ	5.0u			1.0k	30p	1.5 §	150A	Si△	DO27
68#	2915	1 1k	2 5uØØ	30m	5 0				Ø		100m	7 5	5.0u			1 0k			150J	Si*	A1py *
69#	SF11GR315	1 1k	4.5ut	250			25m				250	775mØ		25m		1.1k				Si△	M522
70#	SF11HR315	1 1k	4 5ut	250			25m				250	775mØ		25m		1 1k				Si△	M523
71	SLA5204HF	1 2k	250nØ	500m			1 0				3 0	1 0 Δ	5 0u	100u	100	1.2k		3 0 §	175A	Si△	A31n
72▼	TNF12	1.2k	300n	2 0m			2 0m		Ø		15m	3 0	30n	15u	75	1.2k	2.0p	15m	150S	Si	A109b
73▼	3DF12	1.2k	350n	2 0m			4 0m				30m	3 0 Δ	20n	5.0u	75	1.2k	2 0pØ	30m	150S	Si	A109d
74	USR12	1.2k	500nØ	10m			5 0m				400m	3 3 Δ	5.0u	15m	100	1.2k		750m	150A	Si	A1fv
75	101KL120S20	1 2kt	2 0uØ	315			35				315	1.4		15mØ	120C	1.2k		100 §	175J	Si	DO8Ø
76	251UL120S20	1.2kt	2 0uØ	785			35				785	1 6		16mØ	105C	1 2k		250 §	175J	Si	DO9Ø
77♦	401PDL120S20	1 2kt	2 0uØ	1 2k			35				1.2k	2.0 Δ		15mØ	95C	1 0k		400 §	175J	Si△	J200a
78	MPR12	1.2k	2 5u								500m	1 8 Δ	5.0u	200u	175J	1 2k		500m	100A		
79#	SF12GR315	1.2k	4 5ut	250			25m				250	775mØ		25m		1 2k				Si△	M522
80#	SF12HR315	1.2k	4.5ut	250			25m				250	775mØ		25m		1 2k				Si△	M523
81#	1S1517	1 2k	10uØ	20m			1 0m				2.0	2.0	20u			1.2k		500m	150J	Si	A56b
82	101KL130S20	1.3kt	2 0uØ	315			35				315	1 4		15mØ	120C	1 3k		100 §	175J	Si	DO8Ø
83	251UL130S20	1 3kt	2.0uØ	785			35				785	1 6		16mØ	105C	1.3k		250 §	175J	Si	DO9Ø
84♦	401PDL130S20	1 3kt	2 0uØ	1 2k			35				1 2k	2 0 Δ		15mØ	95C	1 0k		400 §	175J	Si△	J200a
85#	2916	1 3k	2 5uØØ	30m	5 0				Ø		100m	9 0	5.0u			1 2k			150J	Si*	A1py
86	SLA5205HF	1 4k	250nØ	500m			1 0				3 0	1 0 Δ	5.0u	100u	100	1 4k		3.0 §	175A	Si△	A31n
87#	9649	1 4k	5 0uØ	20m			2 0m			Ø	100m	2.0	10u					100m	150J	Si	
88♦	DRS114C	1.4k	15uØ	500m	5 0		500m				1.0	1 0 Δ	10u	200u	125A	1 4k		1.5	125A	Si	A168c
89♦	DRS114D	1 4k	20uØ	500m	5 0		500m				1 0	1 0 Δ	10u	200u	125A	1.4k		1.5	125A	Si	A168c
90♦	SFM15	1.5k	100n	12m			25m				25m	5 0 Δ	100n	12m	100	1 5k		25m§	150A	Si	A1ru
91	1N4441	1.5kt	300nØ	2 0m		1 0k	2 0m		Ø		25m	4.0 Δ	300n	1.0u	40	1.5k		25m	150A	Si△	A1fm
92▼	TNF15	1.5k	300n	2 0m			2.0m		Ø		15m	3.0	30n	15u	75	1.5k	2 0p	15m	150S	Si	A109b
93	VA15X	1.5k	300nØ	2.0m			2.0m		Ø		40m	6.0 Δ	300n	60u	100	1 5k		40m	150	Si△	A1m
94	VB15X	1.5k	300nØ	2 0m			2 0m		Ø		50m	6 0 Δ	300n	60u	100	1 5k		50m	150	Si△	A1fc
95▼	3DF15	1 5k	350n	2 0m			4.0m				30m	3.0 Δ	20n	5.0u	75	1.5k	2.0pØ	30m	150S	Si	A109d
96	USR15	1 5k	500nØ	10m			5 0m				400m	4.0 Δ	5.0u	150u	100	1 5k		600m	150A	Si	A1fv
97#	2917	1 5k	2.5uØØ	30m	5 0				Ø		100m	11	5.0u			1 4k			150J	Si*	A1rb *
98	MPR15	1.5k	2 5u								500m	1 8 Δ	5 0u	150u	175J	1 5k		500m	100A		
99#	1S1517A	1.5k	10uØ	20m			1 0m				2 0	2.0	20u			1 5k		500m	150J	Si	A56b
100	RF160A	1 6k	200 Ø	500m							500m	2.6	2.0u	100u	100	1 6k		500m	150A	Si	A3c
101	RF160B	1.6k	250 Ø	500m							500m	2 6	2.0u	100u	100	1 6k		500m	150A	Si	A3c
102#	2918	1.7k	2.5uØØ	30m	5 0				Ø		100m	12	5.0u			1.6k			150J	Si*	A1rp *
103♦	SFM20	2.0k	100n	12m			25m				25m	5.0 Δ	100n	12m	100	2.0k		25m§	150A	Si	A1ru
104	AM1020A	2.0k	150n	100m			100mt				200m	4.0	1.0u	150u	150	2.0k		200m	200S	Si△	C42l
105#	MU2	2.0k	200nØ	100m			100m				200m	4.0 Δ	2.0u	100u	100A	2.0k	35pØ	200m	125A	Si△	A83v
106	RF200A	2 0k	200n	500m							500m	2.6 Δ	2.0u	100u	100	2.0k		500m	150A	Si	A3c
107	S020G	2.0k	200nØ	1 0m			1 0m	1 0k			50m	10 Δ	25n	20u	150	2.0k		45m	150A	Si	A1fd

SYMBOLS AND CODES EXPLAINED IN INTERPRETER

4. SWITCHING DIODES

IN ORDER OF (1) PIV, (2) RECOVERY TIME, and (3) TYPE No.

LINE No	3 TYPE No	1 PIV (V)	RECOVERY TIME 2 Trr (s)	TEST CONDITIONS If (A)	Vr (V)	Zr (Ω)	Ir (A)	RL (Ω)	CKT	STORE TIME (s)	MIN. FORWARD CURRENT at 25°C IF (A)	at Vf (V)	MAX. REVERSE CURRENT Ir @25°C & Vr (A)	Ir at T & Vr (A)	TEMP T (°C)	TEST VOLT Vr (V)	CAP. at ZERO VOLTS (F)	ABSOLUTE MAX RATING AVG. FWD I (A)	MAX. TEMP (°C)	DESCRIPTION MAT.	DWG. No.
1▼	10F20	2 0k	250n	2 0m			4.0m				10m	5 0u	1.0u	20u	100	2.0k		10m	150S	Si	A1df
2▼	50F20	2.0k	250n	2 0m			4.0m				50m	5 0	1 0u	20u	100	2.0k		50m	150S	Si	A1df
3▼	100F20⊘	2 0k	250n	2 0m			4.0m				100m	5 0	1.0u	20u	100	2 0k		100m	150S	Si	A1df
4	RF200B	2.0k	250n	500m							500m	2 6 △	2 0u	100u	100	2 0k		500m	150A	Si	A3c
5▼	100KF20	2 0k	300n	2 0m			2 0m		⊘		100m	3 0	1 0u	20u	75	2 0k		100m	150S	Si	DO7
6	HX20G	2 0k	300n	2 0m			2 0m				10m	10	2 0u	10m	100	2 0k		30m	125A	Si	A1fs
7	VA20X	2.0k	300n⊘	2 0m			2 0m		⊘		40m	6 0 △	300n	60u	100	2 0k		40m	150	Si△	A1m
8	VB20X	2 0k	300n⊘	2 0m			2 0m		⊘		50m	6 0 △	300n	60u	100	2 0k		50m	150	Si△	A1fc
9	VC20X	2 0k†	300n⊘	1 0			2 0		†		100m	4 8	2 0u	2 0m	125A	2 0k		2 0	125A	Si△	M430
10▼	3DF20	2 0k	350n	2 0m			4 0m				30m	3 0 △	20n	5 0u	75	2 0k	2 0p⊘	30m	150S	Si	A109d
11	AM1020	2 0k	500n	100m			100m†				200m	4 0	1 0u	150u	150	2 0k		200m	200S	Si△	C42I
12	USR20	2 0k	500n⊘	10m			5 0m				400m	5.5 △	5 0u	150u	100	2 0k		500m	150A	Si	A1hp
13	7701-2X	2 0k	300m⊘	2 0m			2 0m				50m	5 0 △	1 0u	150u	125A	2 0k		100m	125A	Si△	A1jb
14	JAN1N5482	2 4k⊘	3 0u⊘	500m			1 0				3.0	4 8 △	5 0u	150u	125A	2 0k	10p⊘	1 0	150A	Si	A1jh
15	SCF2500	2 5k	150n	500m			1 0		△		500m	6 0	100n△	15u△	100	2 5k		500m	175	Si	A138c
16▼	SCFS2500	2 5k	150n	500m			1 0				1 0	8 0 △	10u	120u	100	2 5k		2 0 §	175A	Si	A138w
17♦	SFM25	2 5k	250n	12m			25m				25m	5 0 △	100n	12m	100	2 5k		25m§	150A	Si	A1ru
18	VA25X	2 5k	300n⊘	2 0m			2 0m		⊘		20m	8 0 △	300n	60u	100	2 5k		20m	150	Si△	A1m
19	VB25X	2 5k	300n⊘	2 0m			2 0m		⊘		25m	12 △	300n	60u	100	2 5k		25m	150	Si△	A1fc
20▼	3DF25	2 5k	350n	2 0m			4 0m				30m	3 0 △	20n	5 0u	75	2 0k	2 0p⊘	30m	150S	Si	A109d
21	UDD2 5	2 5k	500n⊘	10m			5 0m				1 2	6.0 △	5 0u					2 2 §	150A	Si	S221
22	UDF2 5	2 5k	500n⊘	10m			5 0m				2 2	6 0 △	10u					4 5 §	150A	Si	S221
23	UGF2.5	2 5k	500n⊘	10m			5 0m				2 5	6.0 △	10u					5 0 §	150A	Si	S293
24	USR25	2 5k	500n⊘	10m			5 0m				400m	6 6 △	5.0u	150u	100	2 5k		400m	150A	Si	A1hp
25#	9650	2 8k	5 0u⊘	20m			2 0m			⊘	100m	4 0	10u					100m	150J	Si	
26	SFM30	3 0k	100n⊘	5 0m			10m		△		10m	15 △	100n△	2 0u△	100A	3 0k	1 0p†⊘	10m	150A	Si	A1fh
27	AM1030A	3 0k	150n⊘	100m			100m†				200m	8 0	1 0u	150u	150	3 0k	1 0p⊘	200m	200S	Si△	A1ke
28#	MU3	3 0k	200n⊘	100m			100m				200m	6 0 △	2 0u	100u	100A	3 0k	35p⊘	200m	125A	Si△	A83v
29	RK300A	3 0k	200n	150m							150m	7 8 △	2 0u	100u	100	3 0k		150m	150A	Si	A3c
30	S030G	3 0k	200n⊘	1 0m			1 0m	1 0k			50m	10 △	25n	20u	150	3 0k	500 †⊘	40m	150A	Si	A1fd
31▼	10F30	3 0k	250n	2 0m			4 0m				10m	5 0	1 0u	20u	100	3 0k		10m	150S	Si	A1df
32▼	50F30	3 0k	250n	2 0m			4 0m				50m	5 0	1 0u	20u	100	3 0k		50m	150S	Si	A1df
33▼	100F30⊘	3 0k	250n	2 0m			4 0m				100m	5.0	1 0u	20u	100	3 0k		100m	150S	Si	A1df
34	RK300B	3 0k	250n	150m							150m	7 8 △	2 0u	100u	100	3 0k		150m	150A	Si	A3c
35▼	100KF30	3 0k	300n	2 0m			2 0m		⊘		100m	3 0	1 0u	20u	75	3 0k		100m	150S	Si	DO7
36	7701-3X	3 0k	300n⊘	2 0m		1 0k	2 0m				50m	7 0	1.0u	150u	125A	3 0k		75m	125A	Si△	A1jb
37	7715-3X	3 0k	300n⊘	2 0m		1 0k	2.0m				50m	8 0	1 0u	150u	125A	3 0k		50m	125A	Si△	A1jb
38	HX30G	3 0k	300n	2 0m			2 0m				10m	10	2 0u	10m	100	3 0k		30m	125A	Si	A1fs
39	RHP3	3 0k	300n⊘								2 5	6 0	5 0u					2.5k	150A	Si	M239u
40	VA30X	3 0k	300n⊘	2 0m			2 0m		⊘		20m	8 0 △	300n	60u	100A	3 0k		20m	150A	Si△	A1m
41	VB30X	3 0k	300n⊘	2 0m			2.0m		⊘		25m	12 △	300n	60u	100A	3 0k		25m	150A	Si△	A1fc
42	VC30X	3 0k†	300n⊘	1 0			2 0		†		100m	7 2	2 0u	2 0m	125A	3 0k		2 0	125A	Si△	M430
43▼	XF10-3	3 0k	300n	2 0m			2 0m		⊘		10m	10	1 0u	50u	80	3 0k		10m	150S	Si	A1fc
44▼	XF25-3	3 0k	300n	2 0m			2 0m		⊘		25m	10	1 0u	50u	80	3 0k		25m	150S		A1fc
45▼	XF50-3	3 0k	300n	2 0m			2 0m		⊘		50m	10	1 0u	50u	80	3 0k		50m	150S		A1fc
46▼	3DF30	3 0k	350n	2 0m			4 0m				30m	3 0 △	20n	5 0u	75	2 0k	2 0p⊘	30m	150S	Si	A109d
47	AM1030	3 0k	500n	100m			100m†				200m	8 0	1 0u	150u	150	3 0k	1 0p⊘	200m	200S	Si△	A1ke
48	USR30	3 0k	500n⊘	10m			5 0m				400m	7 7 △	5 0u	150u	100	3 0k		400m	150A	Si	A1jy
49	JAN1N5483	3 6k⊘	3.0u⊘	500m			1 0				3 0	7 2 △	5.0u	150u	125A	3 0k	10p⊘	1 0	150A	Si	A1mu
50	SFM40	4 0k	100n	5 0m			10m		△		10m	15 △	100n△	2 0u△	100A	4 0k	1 0p†⊘	10m	150A	Si	A1fh
51	AM1040A	4 0k	150n	100m			100m†				200m	10	1 0u	150u	150	4 0k	50p⊘	200m	200S	Si△	A1ke
52#	MU4	4 0k	200n⊘	100m			100m				200m	8 0 △	2 0u	100u	100A	4 0k	35p⊘	200m	125A	Si△	A83v
53	RK400A	4 0k	200n⊘	15			30				15	7.8 △	2 0u	10	100A	4 0k		15	150J	Si	A3c
54	S040G	4 0k	200n⊘	1 0m			1 0m	1k			50m	10 △	25n	20u	150	4 0k	50p	35m	150A	Si	A1fd
55▼	10F40	4 0k	250n	2 0m			4 0m				10m	5 0	1 0u	20u	100	4 0k		10m	150S	Si	A1df
56▼	50F40	4 0k	250n	2 0m			4 0m				50m	5 0	1 0u	20u	100	4 0k		50m	150S	Si	A1df
57▼	100F40⊘	4 0k	250n	2 0m			4 0m				100m	5 0	1 0u	20u	100	4 0k		100m	150S	Si	A1df
58	RK400B	4 0k	250n⊘	15			30				15	7 8 △	2 0u	10	100A	4 0k		15	150J	Si	A3c
59	7701-4X	4 0k	300n⊘	2 0m		1 0k	2.0m				50m	9 0 △	1 0u	150u	125A	4 0k		75m	125A	Si△	A1jb
60	HX40G	4 0k	300n	2 0m			2 0m				10m	10	2 0u	10m	100	4 0k		30m	125A	Si	A1fs
61	RHP4	4 0k	300n⊘								2 5	7 0	5 0u					2 5	150A	Si	M239v
62	VB40X	4 0k	300n⊘	2 0m			2 0m		⊘		25m	12 △	300n	60u	100	4 0k		25m	150	Si△	A1fc
63	VC40X	4 0k†	300n⊘	1 0			2 0		†		100m	9 6	2 0u	2 0m	125A	4 0k		2 0	125A	Si△	M430
64▼	XF10-4	4.0k	300n	2 0m			2 0m		⊘		10m	10	1 0u	50u	80	4 0k		10m	150S	Si	A1fc
65▼	XF25-4	4 0k	300n	2 0m			2 0m		⊘		25m	10	1 0u	50u	80	4 0k		25m	150S		A1fc
66▼	XF50-4	4 0k	300n	2 0m			2 0m		⊘		50m	10	1 0u	50u	80	4 0k		50m	150S		A1fc
67	AM1040	4 0k	500n	100m			100m†				200m	10	1 0u	150u	150	4 0k	50p⊘	200m	200S	Si△	A1ke
68	USR35	4 0k	500n⊘	10m			5 0m				200m	8 8 △	5 0u	150u	100	3 5k		350m	150A	Si	A1jy
69	USR40	4 0k	500n⊘	10m			5 0m				200m	9 9 △	5 0u	150u	100	4 0k		300m	150A	Si	A1gx
70#	9651	4 2k	5 0u⊘	20m			2 0m			⊘	100m	6 0	10u					100m	150J	Si	
71	USR45	4 5k	500n⊘	10m			5 0m				100m	11 △	5 0u	150u	100	4 5k		250m	150A	Si	A1gx
72	JAN1N5484	4 8k⊘	3 0u⊘	500m			1 0				3 0	8 4 △	5 0u	150u	125A	4 0k	10p⊘	1 0	150A	Si	A1mu
73	SFM50	5 0k	100n	5 0m			10m		△		10m	15 △	100n△	2 0u△	100A	5 0k	1 0p†⊘	10m	150A	Si	A1fh
74	AM1050A	5 0k	150n	100m			100m†				200m	13	1 0u	150u	150	5 0k	50p⊘	200m	200S	Si△	A1mf
75	SCF5000	5 0k	150n	500m			1 0		△		500m	12	100n△	15u△	100A	5 0k		500m	175	Si	A138g
76▼	SCFS5000	5 0k	150n	600m			1 0				1 0	16 △	10u	120u	100	5 0k		2 0 §	175A	Si	A138x
77#	MU5	5 0k	200n⊘	100m			100m				200m	10 △	2 0u	100u	100A	5 0k	35p⊘	200m	125A	Si△	A83v
78	RK500A	5 0k	200n⊘	150m							150m	7 8	2 0u	100u	100	5 0k		150m	150A	Si	A3c
79	S050G	5 0k	200n⊘	1 0m			1 0m	1k			50m	10 △	25n	20u	150	5 0k	50p	30m	150A	Si	A1fd
80▼	10F50	5 0k	250n	2 0m			4 0m				10m	5 0	1 0u	20u	100	5 0k		10m	150S	Si	A1df
81▼	50F50	5 0k	250n	2.0m			4 0m				50m	5 0	1 0u	20u	100	5 0k		50m	150S	Si	A1df
82▼	100F50⊘	5 0k	250n	2 0m			4 0m				100m	5 0	1 0u	20u	100	5 0k		100m	150S	Si	A1df
83	RK500B	5 0k	250n⊘	150m							150m	7 8	2 0u	100u	100	5 0k		150m	150A	Si	A3c
84▼	SP5F	5 0k	250n	2 0m			4 0m				20m	12 △	1 0u	20u	85	5 0k		20m	150S	Si	A267e
85	7701-5X	5 0k	300n⊘	2 0m		1 0k	2 0m				50m	11 △	1 0u	150u	125A	5 0k		75m	125A	Si△	A1jb
86	7715-5X	5 0k	300n⊘	2 0m		1 0k	2 0m				30m	12	1 0u	150u	125A	5 0k		30m	125A	Si△	A1jb
87	HX50G	5 0k	300n	2 0m			2 0m				10m	10	2.0u	10m	100	5 0k		30m	125A	Si	A1fs
88	RHP5	5 0k	300n⊘								2 5	10	5 0u					2 5	150A	Si	M239w
89	RVP5	5 0k	300n⊘								800m	10 △	5 0u			5 0k		800m	150A	Si	M239d
90	VB50X	5 0k	300n⊘	2 0m			2 0m		⊘		25m	12 △	300n	60u	100	5 0k		25m	150	Si△	A1fc
91	VC50X	5 0k†	300n⊘	1 0			2 0		†		100m	12	2 0u	2 0m	125A	5 0k		1 5	125A	Si△	M430
92	VF5-5X	5 0k†	300n	2 0m			2 0m		⊘		5 0m	15	4 0u	150u	125	5 0k		5 0m	125	Si△	A83af
93	VF10-5X	5 0k†	300n	2 0m			2 0m		⊘		10m	15	4 0u	150u	125	5 0k		10m	125	Si△	A83af
94	VF25-5X	5 0k†	300n	2 0m			2 0m		⊘		25m	15	4 0u	150u	125	5 0k		25m	125A	Si△	A83af
95	VG5X	5 0k†	300n	2 0m			2 0m		⊘		10m	14	4 0u	150u	125	5 0k		15m	125A	Si△	A83t
96▼	XF10-5	5 0k	300n	2 0m			2 0m		⊘		10m	10	1 0u	50u	80	5 0k		10m	150S	Si	A1fc
97▼	XF25-5	5 0k	300n	2 0m			2 0m		⊘		25m	10	1 0u	50u	80	5 0k		25m	150S		A1fc
98	AM1050	5 0k	500n	100m			100m†				200m	13	1 0u	150u	150	5 0k	50p⊘	200m	200S	Si△	A1mf
99	UDC5	5 0k	500n⊘	10m			5 0m				700m	10 △	2 0u					1 2 §	150A	Si	S221
100	UDD5	5 0k	500n⊘	10m			5 0m				750m	11 △	5 0u					1 5 §	150A	Si	S221
101	UDF5	5 0k	500n⊘	10m			5 0m				1 6	11 △	10u					3 3 §	150A	Si	S221
102	UGD5	5 0k	500n⊘	10m			5 0m				1 6	11 △	5 0u					3 3 §	150A	Si	S293
103	UGF5	5 0k	500n⊘	10m			5 0m				1.8	11 △	10u					3 7 §	150A	Si	S293
104	USR50	5 0k	500n⊘	10m			5 0m				100m	13 △	5 0u	150u	100	5 0k		250m	150A	Si	A1gx
105	SCHF5000	5 0k	1 0u	500m			1 0		△		500m	7 0	100n△	15u△	100A	5 0k		500m	175	Si	A138c
106#	9424	5.0k	3 0u⊘	20m			2 0m			⊘	100m	12	10u					100m	150J	Si	
107▼	XF50-5	5 0k	300m	2 0m			2 0m		⊘		50m	10	1 0u	50u	80	5 0k		50m	150S	Si	A1fc
108#	9652	5.6k	5 0u⊘	20m			2 0m			⊘	100m	8 0	10u					100m	150J	Si	
109	AM1060A	6 0k	150n	100m			100m†				200m	15	1 0u	150u	150	6 0k	50p⊘	200m	200S	Si△	A1mf
110#	MU6	6 0k	200n⊘	100m			100m				200m	12 △	2 0u	100u	100A	6 0k	35p⊘	200m	125A	Si△	A83v

SYMBOLS AND CODES EXPLAINED IN INTERPRETER

4. SWITCHING DIODES

IN ORDER OF (1) PIV, (2) RECOVERY TIME, and (3) TYPE No.

LINE No	3 TYPE No	1 PIV (V)	RECOVERY TIME 2 Trr (s)	TEST CONDITIONS If (A)	Vr (V)	Zr (Ω)	Ir (A)	RL (Ω)	CKT	STORE TIME (s)	MIN. FORWARD CURRENT at 25°C IF (A)	at Vf (V)	MAX. REVERSE CURRENT Ir @25°C & Vr (A)	Ir at T & Vr (A)	TEMP T (°C)	TEST VOLT Vr (V)	CAP at ZERO VOLTS (F)	ABSOLUTE MAX RATING AVG. FWD I (A)	MAX. TEMP (°C)	DESCRIPTION MAT.	DWG. No
1	RK600A	6 0k	200n⊘	150m							150m	7 8	2 0u	100u	100	6 0k		150m	150A	Si	A3c
2	S060G	6 0k	200n⊘	1.0m			1 0m	1 0k			50m	10 △	25n	20u	150	6.0k	500f	25m	150A	Si	A1fd
3	RK600B	6 0k	250n⊘	150m							150m	7 8	2 0u	100u	100	6 0k		150m	150A	Si	A3c
4	SFM60	6 0k	250n	5.0m			10m		△		10m	15 △	100n△	2 0u△	100A	6 0k	1.0pt⊘	10m	150A	Si	A1fh
5▼	SP6F	6 0k	250n	2.0m			4 0m				20m	12 △	1 0u	20u	85	6.0k		20m	150S	Si	A267e
6	7701-6X	6 0k	300n⊘	2 0m		1 0k	2 0m				50m	14 △	1 0u	150u	125A	6 0k		50m	125A	Si△	A1jb
7	HX60G	6 0k	300n	2 0m			2 0m				10m	10	2 0u	10m	100	6.0k		30m	125A	Si	A1fs
8	RHP6	6 0k	300n⊘								2 5	11	5 0u					2 5	150A	Si	M239x
9	RVP6	6 0k	300n⊘				-				800m	11 △	5.0u			6 0k		800m	150A	Si	M239d
10	VC60X	6 0kt	300n⊘	1 0			2 0		†		100m	14	2 0u	2 0m	125A	6 0k		1 5	125A	Si△	M430
11▼	XF10-6	6 0k	300n	2.0m			2 0m		⊘		10m	10	1 0u	50u	80	6 0k		10m	150S	Si	A1fc
12▼	XF25-6	6 0k	300n	2.0m			2 0m		⊘		25m	10	1 0u	50u	80	6 0k		25m	150S		A1fc
13▼	XF50-6	6 0k	300n	2 0m			2 0m		⊘		50m	10	1.0u	50u	80	6 0k		50m	150S	Si	A1fc
14	AM1060	6 0k	500n	100m			100mt				200m	15	1 0u	150u	150	6.0k	50p⊘	200m	200S	Si△	A1mf
15#	ED01	6.0k	500n				50u				100m	6 0	5.0u			6 0k		100m	125J	Si	A83ab
16#	ED03	6 0k	500n				50u				300m	6 0	5 0u			6 0k		300m	125J	Si	A83ar
17	USR60	6 0k	500n⊘	10m			5 0m				100m	15 △	5 0u	150u	100	6 0k		150m	150A	Si	A1gx
18	JAN1N5477	6 0k⊘	3 0u⊘	500m			1 0				3 0	10 △	5 0u	150u	125A	5.0k		1 0	150A	Si	M239e
19	JAN1N5485	6 0k⊘	3 0u⊘	500m			1 0				3 0	10 △	5 0u	150u	125A	5.0k	10p⊘	1 0	150A	Si	A1nv
20	AM1070A	7 0k	150n	100m			100mt				200m	15	1 0u	150u	150	7 0k	50p⊘	200m	200S	Si△	A1mf
21#	RY10U	7.0k	200n⊘	100m			100m				100m	20 △	2.0u	100u	100A	7 0k		100m	125A	Si△	M327a
22	S070G	7 0k	200n⊘	1 0m			1 0m	1k			50m	10 △	25n	20u	150	7 0k	50p	20m	150A	Si	A1fd
23	SFM70	7 0k	250n	5 0m			10m		△		10m	15 △	100u△	2 0u△	100A	7 0k	1 0pt⊘	10m	150A	Si	A1fh
24▼	SP7F	7 0k	250n	2 0m			4 0m				20m	12 △	1 0u	20u	85	7 0k		20m	150S	Si	A267e
25	7701-7X	7 0k	300n⊘	2 0m		1 0k	2 0m				50m	16 △	1 0u	150u	125A	7 0k		50m	125A	Si△	A1jf
26	7715-7X	7 0k	300n⊘	2 0m		1 0k	2 0m				30m	18	1 0u	150u	125A	7 0k		30m	125A	Si△	A1kt
27	HX70G	7 0k	300n	2 0m			2 0m				10m	10	2 0u	10m	100	7 0k		30m	125A	Si	A1fs
28	RHP7	7 0k	300n⊘								2 5	12	5 0u					2 5	150A	Si	M239y
29	RVP7	7 0k	300n⊘								800m	12 △	5 0u			7 0k		800m	150A	Si	M239e
30	VC70X	7 0kt	300n⊘	1 0			2 0		†		100m	14	2.0u	2 0m	125A	7 0k		1 5	125A	Si△	M430
31	VF5-7X	7 0kt	300n	2 0m			2 0m		⊘		5 0m	15	4.0u	150u	125	7 0k		5 0m	125	Si△	A83af
32	VF10-7X	7 0kt	300n	2 0m			2 0m		⊘		10m	15	4.0u	150u	125	7 0k		10m	125	Si△	A83af
33	VF25-7X	7 0kt	300n	2 0m			2 0m		⊘		25m	15	4.0u	150u	125	7 0k		25m	125A	Si△	A83af
34	VG7X	7 0kt	300n	2 0m			2 0m		⊘		10m	16	4 0u	150u	125	7 0k		15m	125A	Si△	A83t
35▼	XF10-7	7 0k	300n	2 0m			2 0m		⊘		10m	10	1 0u	50u	80	7 0k		10m	150S	Si	A1fc
36▼	XF25-7	7 0k	300n	2 0m			2 0m		⊘		25m	10	1 0u	50u	80	7 0k		25m	150S		A1fc
37▼	XF50-7	7 0k	300n	2 0m			2 0m		⊘		50m	10	1.0u	50u	80	7 0k		50m	150S	Si	A1fc
38	AM1070	7 0k	500n	100m			100mt				200m	15	1.0u	150u	150	7 0k	50p⊘	200m	200S	Si△	A1mf
39	USR70	7 0k	500n⊘	10m			5 0m				100m	17 △	5.0u	150u	100	7 0k		150m	150A	Si	A1jg
40	JAN1N5478	7 2k⊘	3 0u⊘	500m			1 0				3 0	12 △	5 0u	150u	125A	6 0k		1 0	150A	Si	M239e
41	SCF7500	7.5k	150n	500m			1 0		△		500m	18	100n△	15u△	100A	7 5k		500m	175	Si	A138m
42▼	SCFS7500	7 5k	150n	500m			1 0				1 0	21 △	10u	120u	100	7 5k		2.0 §	175A	Si	A138y
43#	BY167	7 5k	300n	10m			10mt				250m	9 0 △⊘	1 0u					250m§		Si	A1pf
44	UDC7 5	7 5k	500n⊘	10m			5 0m				500m	15 △	2.0u					900m§	150A	Si	S221
45	UDD7 5	7 5k	500n⊘	10m			5 0m				500m	17 △	5 0u					1 0 §	150A	Si	S221
46	UGD7 5	7 5k	500n⊘	10m			5 0m				1 1	17 △	5 0u					2 2 §	150A	Si	S293
47	UGF7 5	7 5k	500n⊘	10m			5 0m				1 2	17 △	10u					2 5 §	150A	Si	S293
48	SCHF7500	7 5k	1 0u	500m			1 0		△		500m	10	100n△	15u△	100A	7 5k		500m	175	Si	A138f
49	RTD08	8 0k	200n	100m			200m				100m	20 △	20u	100u	100A	8 0k		100m	125A	Si	A1jv
50	S080G	8 0k	200n⊘	1 0m			1 0m	1k			50m	10 △	25n	20u	150	8 0k	50p	15m	150A	Si	A1fd
51▼	SLF8	8 0k	250n	2 0m			4 0m				10m	15 △	1 0u	30u	85	8 0k		10m	150S	Si	A267
52▼	SP8F	8 0k	250n	2 0m			4 0m				20m	12 △	1 0u	20u	85	8 0k		20m	150S	Si	A267e
53	7701-8X	8 0k	300n⊘	2 0m		1 0k	2 0m				50m	18 △	1 0u	150u	125A	8 0k		50m	125A	Si△	A1kt
54	HX80E	8 0k	300n	2 0m			2 0m				50m	20	1 0u	10u	100	8 0k		50m	125A	Si	A250
55	HX80G	8 0k	300n	2 0m			2 0m				10m	10	2 0u	10m	100	8 0k		30m	125A	Si	A1fs
56	RFD8	8 0k	300n	20m			40m				20m	20 △	2.0u	100u	100A	8 0k		20m§	125A	Si	A1hx
57	RHP8	8 0k	300n⊘								2 5	13	5 0u					2 5	150A	Si	M239z
58	RVP8	8 0k	300n⊘								800m	13 △	5 0u			8 0k		800m	150A	Si	M239e
59	RZ08	8 0k	300n⊘	20m			40m				20m	20 △	2 0u	10	100A	8 0k		20m	125A	Si	A1hy
60	VC80X	8 0kt	300n⊘	1 0			2 0		†		100m	16	2 0u	2 0m	125A	8 0k		1 0	125A	Si△	M430
61▼	XF10-8	8 0k	300n	2 0m			2 0m		⊘		10m	10	1 0u	50u	80	8 0k		10m	150S		A1fc
62▼	XF25-8	8 0k	300n	2 0m			2 0m		⊘		25m	10	1 0u	50u	80	8 0k		25m	150S		A1fc
63▼	XF50-8	8 0k	300n	2 0m			2 0m		⊘		50m	10	1 0u	50u	80	8 0k		50m	150S	Si	A1fc
64▼	XXF8	8 0k	300n	2 0m			2 0m		⊘		5 0m	20	1 0u	50u	80	8 0k		5 0m	150S	Si	A83t
65	USR80	8 0k	500n⊘	10m			5 0m				100m	20 △	5 0u	150u	100	8 0k		125m	150A	Si	A1jq
66	JAN1N5479	8.4k⊘	3 0u⊘	500m			1 0				3 0	14 △	5 0u	150u	125A	7 0k		1 0	150A	Si	M239e
67▼	SP9F	9 0k	250n	2 0m			4 0m				20m	12 △	1 0u	20u	85	9 0k		20m	150S	Si	A267e
68	7701-9X	9 0k	300n⊘	2 0m		1 0k	2 0m				50m	20 △	1 0u	150u	125A	9.0k		50m	125A	Si△	A1kt
69	HX90E	9 0k	300n	2 0m			2 0m				50m	20	1 0u	10u	100	9 0k		50m	125A	Si	A250
70	HX90G	9 0k	300n	2 0m			2 0m				10m	10	2 0u	10m	100	9 0k		30m	125A	Si	A1fs
71	RHP9	9 0k	300n⊘								2 5	16	5 0u					2 5	150A	Si	
72	RVP9	9 0k	300n⊘								800m	16 △	5 0u			9 0k		800m	150A	Si	M239e
73▼	XF10-9	9 0k	300n	2 0m			2 0m		⊘		10m	10	1 0u	50u	80	9 0k		10m	150S		A1fc
74▼	XF25-9	9 0k	300n	2 0m			2 0m		⊘		25m	10	1 0u	50u	80	9 0k		25m	150S		A1fc
75▼	XF50-9	9 0k	300n	2 0m			2 0m		⊘		50m	10	1 0u	50u	80	9.0k		50m	150S	Si	A1fc
76	JAN1N5480	9 6k⊘	3 0u⊘	500m			1 0				3 0	16 △	5 0u	150u	125A	8 0k		1.0	150A	Si	M239e
77	SFMS10K	10k	100n	5 0m			10m		△		10m	30 △	100n△	2 0u△	100A	10k		5 0m§	150A	Si	A1sa
78	SCF10000	10k	150n	500m			1 0		△		500m	24	100u△	15u△	100A	10k		500m	175	Si	A138q
79▼	SCFS10000	10k	150n	500m			1 0				1 0	29 △	10u	120u	100	10k		2 0 §	175A	Si	A138z
80#	MU10	10k	200n⊘	100m			100m				200m	20 △	2 0u	100u	100A	10k	35p⊘	200m	125A	Si△	A83v
81	RTD10	10k	200n	100m			200m				100m	20 △	20u	100u	100A	10k		100m	125A	Si	A1jv
82▼	SLF10	10k	250n	2 0m			4 0m				10m	15 △	1 0u	30u	85	10k		10m	150S	Si	A267
83▼	SP10F	10k	250n	2 0m			4.0m				20m	12 △	1 0u	20u	85	10k		20m	150S	Si	A267e
84	7701-10X	10k	300n⊘	2 0m		1 0k	2 0m				50m	22 △	1.0u	150u	125A	10k		50m	125A	Si△	A1kt
85	7715-10X	10k	300n⊘	2 0m		1 0k	2 0m				20m	24	1 0u	150u	125A	10k		20m	125A	Si△	A1kt
86	HX100E	10k	300n	2 0m			2 0m				50m	20	1 0u	10u	100	10k		50m	125A	Si	A250
87	HX100G	10k	300n	2 0m			2 0m				10m	10	2.0u	10m	100	10k		30m	125A	Si	A1fs
88	RFD10	10k	300n	20m			40m				20m	20 △	2 0u	100u	100A	10k		20m§	125A	Si	A1hx
89	RHP10	10k	300n⊘								2 5	17	5.0u					2 5	150A	Si	
90	RVP10	10k	300n⊘								800m	17 △	5 0u			10k		800m	150A	Si	M239f
91	RZ10#	10k	300n⊘	20m			40m				20m	20 △	2 0u	100m	100A	10k		20m	125A	Si	A1hy
92	VF5-10X	10kt	300n	2 0m			2 0m		⊘		5 0m	15	4 0u	150u	125	10k		5 0m	125	Si△	A83af
93	VF10-10X	10kt	300n	2 0m			2 0m		⊘		10m	15	4 0u	150u	125	10k		10m	125	Si△	A83af
94	VF25-10X	10kt	300n	2 0m			2 0m		⊘		25m	15	4 0u	150u	125	10k		25m	125A	Si△	A83af
95	VG10X	10kt	300n	2 0m			2 0m		⊘		10m	24	4 0u	150u	125	10k		15m	125A	Si△	A83t
96▼	XXF10	10k	300n	2 0m			2 0m		⊘		5 0m	20	1 0u	50u	80	10k		5 0m	150S	Si	A83t
97	UDC10	10k	500n⊘	10m			5 0m				370m	20 △	2 0u					750m§	150A	Si	S221
98	UGD10	10k	500n⊘	10m			5 0m				850m	22 △	5 0u					1 7 §	150A	Si	S293
99	USR100	10k	500n⊘	10m			5 0m				100m	24 △	5 0u	150u	100	10k		125m	150A	Si	A1jg
100	SCHF10000	10k	1 0u	500m			1 0		△		500m	14	100n△	15u△	100A	10k		500m	175	Si	A138g
101▼	SP11F	11k	250n	2 0m			4 0m				20m	12 △	1 0u	20u	85	11k		20m	150S	Si	A267e
102	SCF12500	12k	150n	500m			1 0		△		500m	30	100n△	15u△	100A	13k		500m	175	Si	A138s
103▼	SCFS12500	12k	150n	500m			1 0				1 0	36 △	10u	120u	100	12k		2 0 §	175A	Si	A138u
104	RTD12	12k	200n	100m			200m				100m	24 △	20u	100u	100A	12k		100m	125A	Si	A1mc
105▼	SP12F	12k	250n	2 0m			4 0m				20m	12 △	1 0u	20u	85	12k		20m	150S	Si	A267e
106	7701-12X	12k	300n⊘	2 0m		1 0k	2 0m				50m	26 △	1 0u	150u	125A	12k		50m	125A	Si△	A1kt
107	HX120E	12k	300n	2 0m			2 0m				50m	20	1 0u	10u	100	12k		50m	125A	Si	A250
108	RCD12	12k	300n	20m			40m				20m	24 △	2 0u	100u	100A	12k		20m§	125A	Si	A1ma
109	RZ12#	12k	300n⊘	20m			40m				20m	24 △	2.0u	100m	100A	12k		20m	125A	Si	A1md
110	VF5-12X	12kt	300n	2 0m			2 0m		⊘		5 0m	15	4 0u	150u	125	12k		5 0m	125	Si△	A83af

SYMBOLS AND CODES EXPLAINED IN INTERPRETER

4. SWITCHING DIODES

IN ORDER OF (1) PIV, (2) RECOVERY TIME, and (3) TYPE No.

LINE No	3 TYPE No.	1 PIV (V)	RECOVERY TIME 2 Trr (s)	TEST CONDITIONS If (A)	Vr (V)	Zr (Ω)	Ir (A)	RL (Ω)	CKT	STORE TIME (s)	MIN. FORWARD CURRENT at 25°C IF (A)	at Vf (V)	MAX. REVERSE CURRENT Ir @25°C & Vr (A)	Ir at T & Vr (A)	TEMP T (°C)	TEST VOLT Vr (V)	CAP. at ZERO VOLTS (F)	ABSOLUTE MAX RATING AVG. FWD I (A)	MAX. TEMP (°C)	MAT.	DESCRIPTION DWG. No.
1	VF10-12X	12k†	300n	2 0m			2 0m		☑		10m	15	4 0u	150u	125	12k		10m	125	Si△	A83af
2	VF25-12X	12k†	300n	2.0m			2 0m		☑		25m	15	4 0u	150u	125	12k		25m	125A	Si△	A83af
3	VG12X	12k†	300n	2 0m			2 0m		☑		5.0m	30	4.0u	150u	125	12k		10m	125A	Si△	A83t
4▼	XXF12	12k	300n	2 0m			2 0m		☑		5 0m	20	1.0u	50u	80	12k		5 0m	150S	Si	A83t
5	USR120	12k	500n☑	10m			5 0m				100m	31 △	5.0u	150u	100	12k		100m	150A	Si	A1jq
6	SCHF12500	12k	1 0u	500m			1 0		△		500m	17	100n△	15u△	100A	13k		500m	175	Si	A138h
7	JAN1N5481	12k☑	3 0u☑	500m			1 0				3 0	21 △	5 0u	150u	125A	10k		1.0	150A	Si	M239e
8	RTD14	14k	200n	100m			200m				100m	30 △	20u	100u	100A	14k		100m	125A	Si	A1mc
9	HX140E	14k	300n	2 0m			2 0m				50m	20	1.0u	10u	100	14k		50m	125A	Si	A250
10	RZ14	14k	300n☑	20m			40m				20m	30 △	2 0u	10	100A	14k		20m	125A	Si	A1md
11	SFMS15K	15k	100n	5.0m			10m		△		10m	45 △	100n△	2u△	100A	15k		5 0m§	150A	Si	A1sg
12▼	SCFS15000	15k	150n	500m			1 0				1.0	44 △	10u	120u	100	15k		2.0 §	175A	Si	A138v
13▼	SLF15	15k	250n	2 0m			4 0m				10m	25 △	1.0u	30u	85	15k		10m	150S	Si	A267a
14	7701-15X	15k	300n☑	2 0m		1 0k	2.0m		☑		50m	33 △	1 0u	150u	125A	15k		50m	125A	Si△	A1kt
15	7715-15X	15k	300n☑	2 0m		1.0k	2 0m				20m	36	1 0u	150u	125A	15k		20m	125A	Si△	A1kt
16	RCD15	15k	300n	20m			40m				20m	30 △	2 0u	100u	100A	15k		20m§	125A	Si	A1ma
17	RHP15	15k	300n☑								2 2	25	5 0u					2 2	150A	Si	
18	RVP15	15k	300n☑								800m	25 △	5.0u			15k		800m	150A	Si	M239g
19	VF5-15X	15k†	300n	2 0m			2 0m		☑		5 0m	60	4.0u	150u	125	15k		5.0m	125	Si△	A83bg
20	VF10-15X	15k†	300n	2 0m			2.0m		☑		10m	60	4.0u	150u	125	15k		10m	127	Si△	A83bg
21	VF25-15X	15k†	300n	2 0m			2 0m		☑		25m	60	4.0u	150u	125	15k		25m	125A	Si△	A83bg
22	VG15X	15k†	300n	2 0m			2.0m		☑		5 0m	36	4.0u	150u	125	15k		10m	125A	Si△	A83t
23▼	XXF15	15k	300n	2 0m			2 0m		☑		5 0m	20	1 0u	50u	80	15k		5 0m	150S	Si	A83t
24	UDC15	15k	500n☑	10m			5 0m				250m	30 △	2.0u					500m§	150A	Si	S221
25	USR150	15k	500n☑	10m			5.0m				100m	33 △	5.0u	150u	100	15k		80m	150A	Si	A1jq
26	SCHF15000	15k	1.0u	500m			1 0		△		500m	20	100n△	15u△	100A	15k		500m	175	Si	A138m
27	RTD16	16k	200n	100m			200m				100m	30 △	20u	100u	100A	16k		100m	125A	Si	A1mc
28	HX160E	16k	300n	2 0m			2 0m				50m	20	1.0u	10u	100	16k		50m	125A	Si	A250
29	RZ16	16k	300n☑	20m			40m				20m	30 △	2.0u	10	100A	16k		20m	125A	Si	A1md
30	RTD18	18k	200n	100m			200m				100m	36 △	20u	100u	100A	18k		100m	125A	Si	A1nc
31	7701-18X	18k	300n☑	2.0m		1 0k	2 0m				50m	40 △	1.0u	150u	125A	18k		50m	125A	Si△	A1pp
32	HX180E	18k	300n	2.0m			2 0m				50m	20	1 0u	10u	100	18k		50m	125A	Si	A250
33	RZ18#	18k	300n☑	20m			40m				20m	36 △	2.0u	100m	100A	18k		20m	125A	Si	A1nd
34#	EDH18	18k	500n				50u				100m	18	10u			18k		100m	125J	Si	A83ba
35	USR180	18k	500n☑	10m			5 0m				100m	35 △	5.0u	150u	100	18k		75m	150A	Si	A1jq
36	SFMS20K	20k	100n	5 0m			10m		△		10m	60 △	100n△	2.0u△	100A	20k		5 0m§	150A	Si	A1sp
37#	MU20	20k	200n	100m			100m				200m	52 △	2 0u	100u	100C	20k		200m			A83bu
38	RTD20	20k	200n	100m			200m				100m	40 △	20u	100u	100A	20k		100m	125A	Si	A1nc
39▼	SLF20	20k	250n	2 0m			4.0m				10m	30 △	1.0u	30u	85	20k		10m	150S	Si	A267a
40	7701-20X	20k	300n☑	2 0m		1 0k	2 0m				50m	44 △	1.0u	150u	125A	20k		50m	125A	Si△	A1pp
41	7715-20X	20k	300n☑	2 0m		1 0k	2 0m				20m	52	1 0u	150u	125A	20k		20m	125A	Si△	A1pp
42	HX200E	20k	300n	2.0m			2.0m				50m	20	1.0u	10u	100	20k		50m	125A	Si	A250
43	RCD20	20k	300n	20m			40m				20m	36 △	2.0u	100u	100A	20k		20m§	125A	Si	A1nb
44	RHP20	20k	300n☑								2 2	33	5 0u					2.2	150A	Si	
45	RVP20	20k	300n☑								600m	33 △	5.0u			20k		600m	150A	Si	M239h
46	RZ20	20k	300n☑	20m			40m				20m	40 △	2 0u	10	100A	20k		20m	125A	Si	A1nd
47	VF5-20X	20k†	300n	2 0m			2 0m		☑		5 0m	60	4.0u	150u	125	20k		5.0m	125	Si△	A83bg
48	VF10-20X	20k†	300n	2 0m			2 0m		☑		10m	60	4.0u	150u	125	20k		10m	125	Si△	A83bg
49	VF25-20X	20k†	300n	2.0m			2.0m		☑		25m	60	4 0u	150u	125	20k		25m	125A	Si△	A83bg
50	VG20X	20k†	300n	2.0m			2 0m		☑		5 0m	50	4 0u	150u	125	20k		10m	125A	Si△	A83t
51▼	XXF20	20k	300n	2 0m			2 0m		☑		5.0m	40	1 0u	50u	80	20k		5 0m	150S	Si	A83bg
52	SCHF20000	20k	1 0u	500m			1 0		△		500m	27	100n△	15u△	100A	20k		500m	175	Si	A138q
53	RTD25	25k	200n	100m			200m				100m	50 △	20u	100u	100A	25k		100m	125A	Si	A1pa
54▼	SLF25	25k	250n	2.0m			4 0m				10m	40 △	1.0u	30u	85	25k		10m	150S	Si	A267b
55	RCD25	25k	300n	20m			40m				20m	50 △	2.0u	100u	100A	25k		20m§	125A	Si	A1nz
56	RHP25	25k	300n☑								2.2	42	5 0u					2 2	150A	Si	
57	RVP25	25k	300n☑								600m	42 △	5 0u			25k		600m	150A	Si	M239j
58	RZ25	25k	300n☑	20m			40m				20m	50 △	2.0u	10	100A	25k		20m	125A	Si	A1pb
59	VF5-25X	25k†	300n	2 0m			2 0m		☑		5 0m	60	4 0u	150u	125	25k		5.0m	125	Si△	A83bg
60	VF10-25X	25k†	300n	2 0m			2 0m		☑		10m	60	4 0u	150u	125	25k		10m	125	Si△	A83bg
61	VF25-25X	25k†	300n	2 0m			2 0m		☑		25m	60	4.0u	150u	125	25k		25m	125A	Si△	A83bg
62▼	XXF25	25k	300n	2.0m			2 0m		☑		5 0m	40	1.0u	50u	80	25k		5 0m	150S	Si	A83bg
63	SCHF25000	25k	1.0u	500m			1 0		△		500m	33	100n△	15u△	100A	25k		500m	175	Si	A138s
64	SFMS30K	30k	100n	5.0m			10m		△		10m	90 △	100n△	2 0u△	100A	30k		5 0m§	150A	Si	A1re
65	RTD30	30k	200n	100m			200m				100m	60 △	20u	100u	100A	30k		100m	125A	Si	A1pt
66▼	SLF30	30k	250n	2.0m			4 0m				10m	50 △	1 0u	30u	85	30k		10m	150S	Si	A267c
67	7715-30X	30k	300n☑	2 0m		1 0k	2 0m				15m	75	1 0u	150u	125A	30k		15m	125A	Si△	A1pp
68	RCD30	30k	300n	20m			40m				20m	60 △	2 0u	100u	100A	30k		20m§	125A	Si	A1ps
69	RHP30	30k	300n☑								2 2	50	5 0u					2 2	150A	Si	
70	RVP30	30k	300n☑								600m	50 △	5.0u			30k		600m	150A	Si	M239j
71	RZ30	30k	300n☑	20m			40m				20m	60 △	2.0u	.10	100A	30k		20m	125A	Si	A1pu
72	VF5-30X	30k	300n	2 0m			2 0m		☑		5.0m	90	4.0u	150u	125	30k		5 0m	125	Si△	A83bt
73	VF10-30X	30k†	300n	2 0m			2 0m		☑		10m	90	4 0u	150u	125	30k		10m	125A	Si△	A83bt
74	VF25-30X	30k†	300n	2 0m			2 0m		☑		25m	90	4 0u	150u	125	30k		25m	125A	Si△	A83bt
75▼	XXF30	30k	300n	2 0m			2 0m		☑		5.0m	60	1 0u	50u	80	30k		5.0m	150S	Si	A83bt
76	RHP35	35k	300n☑								2.2	58	5 0u					2 2	150A	Si	
77	RVP35	35k	300n☑								600m	58 △	5.0u			35k		600m	150A	Si	M239k
78	SFMS40K	40k	100n	5.0m			10m		△		10m	120 △	100n△	2.0u△	100A	40k		5.0m§	150A	Si	A1qf
79	1N5389	40k	200n								100m	80 △	50u	100u	100	40k		1 0m	125A	Si	A1m
80	RTD40	40k	200n	100m			200m				100m	80 △	20u	100u	100A	40k		100m	125A	Si	A1qv
81▼	SLF40	40k	250n	2 0m			4 0m				10m	60 △	1 0u	30u	85	30k		10m	150S	Si	A267d
82	7715-40X	40k	300n☑	2 0m			2 0m		☑		15m	100	1 0u	150u	125A	40k		15m	125A	Si△	A1rf
83	RCD40	40k	300n	20m			40m				20m	80 △	2 0u	100u	100A	40k		20m§	125A	Si	A1qt
84	RHP40	40k	300n☑								2.2	65	5 0u					2.2	150A	Si	
85	RVP40	40k	300n☑								600m	65 △	5.0u			40k		600m	150A	Si	M239k
86	RZ40	40k	300n☑	20m			40m				20m	80 △	2.0u	10	100A	40k		20m	125A	Si	A1pm
87	VF5-40X	40k†	300n	2 0m			2 0m		☑		5.0m	90	4.0u	150u	125	40k		5.0m	125	Si△	A83bt
88	VF10-40X	40k†	300n	2 0m			2 0m		☑		10m	90	4 0u	150u	125	40k		10m	125A	Si△	A83bt
89	VF25-40X	40k†	300n	2 0m			2 0m		☑		25m	90	4.0u	150u	125	40k		25m	125A	Si△	A83bt
90▼	XXF40	40k	300n	2 0m			2 0m		☑		5.0m	60	1 0u	50u	80	40k		5.0m	150S	Si	A83bt
91	RHP45	45k	300n☑								2.2	75	5 0u					2.2	150A	Si	
92	RVP45	45k	300n☑								600m	75 △	5 0u			45k		600m	150A	Si	M239l
93	RTD50	50k	200n	100m			200m				100m	100 △	20u	100u	100A	50k		100m	125A	Si	A1rm
94	7715-50X	50k	300n☑	2 0m		1 0k	2 0m				15m	125	1 0u	150u	125A	50k		15m	125A	Si△	A1rf
95	RCD50	50k	300n	20m			40m				20m	100 △	2 0u	100u	100A	50k		20m§	125A	Si	A1rj
96	RHP50	50k	300n☑								2 2	82	5 0u					2 2	150A	Si	
97	RVP50	50k	300n☑								600m	82 △	5 0u			50k		600m	150A	Si	M239l
98	RZ50	50k	300n☑	20m			40m				20m	100 △	2 0u	10	100A	50k		20m	125A	Si	A1rn

SYMBOLS AND CODES EXPLAINED IN INTERPRETER

5. RECTIFIERS

IN ORDER OF (1) PIV, (2) MAX AVG FWD CURRENT (3) TEMPERATURE, and (4) TYPE No.

LINE No	TYPE No	1 PIV (V)	MAX AVG FWD DC CURRENT 2 Io (A)	3 at TEMP (°C)	MAX RATINGS @ 25°C SURGE CUR. PEAK 1 Cy (A)	PULSE WIDTH (s)	DISS. (W)	MAX. TEMP (°C)	MAXIMUM FORWARD VOLTAGE DROP Vf (V)	at If (A)	at TEMP (°C)	MAX. REVERSE CURRENT Ir @25°C & Vr (A)	Ir at T & Vr (A)	TEMP T (°C)	TEST VOLT Vr (V)	AVALANCHE RATINGS MAX V BKDN. (V)	MIN SLOPE (A/V)	MAT	DWG. No
1#	SKEA1/10		1 4	45A	50 §	70m	1 2	160	1 3	3 1 ⊘	25		100u⊘	130	800	1 3k⊘		Si	C42s
2#	SKEA1/12		1 4	45A	50 §	70m	1 2	160	1 3	3.1 ⊘	25		100u⊘	130	900	1 7k⊘		Si	C42s
3	4JA27DR700		12	150	240		14	200J	1 8	100	25	50u	1 0m	200C	400			Si	DO4
4	4JA38DR700		35	140C	500		40	200J	1 4	100	25	100u	2 0m	200C	400			Si	DO5
5	4JA70MR700		100	130C	1 6k		125	200J	1 9	1 0k	25	3.0m	15m	200C	600			Si	DO8
6	4JA90MR700		250	133	4 5k			200J	2 05	1 0k	25	6.0m	25m	200C	600			Si	S120b
7#	SSiL9980	1 4	250	100C	6 1k	10m		150J	1 3	785	25J		40m	150J				Si△*	M572a
8#	SD5	5 0	75	25A$				150A				10u			5.0			Si	
9#	SD7	7 0	065	25A$				150A				10u			7.0			Si	
10	CD1117	10 †	20	25$	1 0	1 0	20	175A	70	1 0m	25	100n			5.0			Si	A1bz
11	ıı1R0	10	1 0	25	100	1 0u	900m	150	450m	1 0m	25	10u		25	5.0			Si	A52e
12	NPC0010	10	1 0	25	25			150A	1 1	1 0	25	30u						Si	A3n
13	ıı1R2	10	3 0	25	150	1 0u		150	950m	3 0	25	25u			5 0			Si	S318
14	ıı1R3	10	8 0	25	500	1 0u		150	950m	8.0	25	75u		25	5 0			Si	S318a
15	ıı1R4	10	20	25	800	1.0u		150	950m	20	25	100u		25	5.0			Si	S318b
16	MR2261	10	25	100C	300	8 3m		175J	15	25	25A	1 0m	10m	100C	10			Si△	DO21⊘
17	ıı1R5	10	30	25	1 0k	1 0u		150	950m	30	25	200u		25	5 0			Si	S318c
18#	1S441△	12	3 0	100	11	20m	300	150A	1 5	3 0	25					27		Si	S4a⊘
19#	SD15△	15	055	25A$				150A				10u			15			Si	
20	S43	15	50	25$	15				1 2	80	25	10u			15			Si	A54
21	MCV	15	1 1	50	50	8 3m		175	1 2		25	10u						Si	A3h
22	HCV	15	1 1	75A	75	4 0m		150A	1 2	1.1	100	10u△		100	15			Si	DO27
23	1N5170	15	2.0	50A	200			175A	1 2 †	2 0	50A		25u	50A	15			Si	DO27
24	2EM015	15	2 0	50A	100 §			175A	1 2	2.0	50A	25u			15			Si	DO27
25	3A15	15	3 0	50	300	8 0m		175	1.2	3 0	25	500u			15			Si	A1eq
26	6A15	15	6 0	25	300	8 0m		175	1 2	6 0	25	25u						Si	S19f
27#	12F5	15	12	100A	150 §	10m		190J	.65	12	100B		2 5m	100B	50			Si△	DO4⊘
28	HB2	18	33m	25A			150m	150A	1.0	5 0m⊘	25A	5.0u							C1
29	S241	20	10	25$					60	15	25	2 0u			12			Si	A55
30#	1S442△	20	3 0	100	5 9	20m	300	150A	1 5	3.0	25					51		Si	S4a⊘
31▼	MBD5300	20	16	60	500	8 3m	6 0	220	500m	25	25	20m	100m	100				Si	A179
32	MBD5400	20 †	25	60C	600			100J	750m	75	25J	30m	200m	100C	20			Si$	S329
33	MR2262	20	25	100C	300	8 3m		175J	1 5	25	25A	1.0m	10m	100C	20			Si△	DO21⊘
34	MBD5500	20 †	50	50C	800			100J	650m	100	25C	200m	500m	100C	20			Si	DO21
35#	FS19	25	03	25A	20							70u	240m	70A	25			Ge	DO7
36	P1A5	25	05	50	30			175	1 0	05	25	10u	50m	100	25			Si	M343
37	P2A5	25	10	50	30			175	1 0	10	25	10u	.50m	100	25			Si	M343
38	P3A5	25	20	50	30			175	1 0	20	25	10u	50m	100	25			Si	M343
39	P4A5	25	30	50	30			175	1 0	30	25	10u	50m	100	25			Si	M343
40	S79	25	35	25$	15				1 2	55	25	50u			25			Si	A54
41	P5A5	25	40	50	30			175	1 0	40	25	10u	50m	100	25			Si	M343
42	P6A5	25	50	50	30			175	1.0	50	25	10u	50m	100	25			Si	M343
43	P7A5	25	60	50	30			175	1 0	60	25	10u	50m	100	25			Si	M343
44	ıı2R0	25	1 0	25	1 0k	1 0u	900m	150	450m	1 0m	25	10u		25	13			Si	A52e
45	S72	25	1 0	80$	15				1 0	1 5	25	600u			25			Si	A54
46	MDA922-1†	25 †	1 8	55A	100			175J	1 1	750m	25J	20u			25			Si△	M535a
47	S32△	25	2 0	25$	20				1 2	3 0	25	2 0m			25			Si	S11
48	ıı2R2	25	3 0	25	150	1 0u		150	950m	3.0	25	25u		25	13			Si	S318
49	ıı2R3	25	8 0	25	500	1.0u		150	950m	8 0	25	75u		25	13			Si	S318a
50	ıı2R4	25	20	25	800	1 0u		150	950m	20	25	100u		25	13			Si	S318b
51	ıı2R5	25	30	25	1 0k	1 0u		150	950m	30	25	200u		25	13			Si	S318c
52#	SD30	30	045	25A$				150A				10u			30			Si	
53	S34△	30	50m	25$	15				1 2	80m	25	1 0m			30			Si	A54
54	S73	30	40	80$	15				1 2	65	25	100u			30			Si	A54
55	S21△	30	50	25	15			150A	1 2	80	25	10u			30			Si	A54
56	MC30△	30	1 1	50	50	8 3m		175	1 2		25	10u						Si	A3h
57	HC30	30	1 1	75A	75	4 0m		150A	1 2	1 1	100	10u△	20m	100	30			Si	DO27
58	2A30	30	2 0	50A	200	8 0m	2 0	175A	1 2	2 0	25A	25u			30			Si	A3t
59	3A30	30	3 0	50	300	8.0m		175	1 2	3 0	25	500u			30			Si	A1eq
60	6A30	30	6 0	25	300	8 0m		175	1 2	6 0	25	25u						Si	S19f
61▼#	SSiE2702	30	12	110C	250	10m		110	1 35	23	25J		2 0m	110J				Si△	M324a
62▼#	SSiE2802	30	12	110C	250	10m		110	1.35	23	25J		2 0m	110J				Si△	M324a
63	MR2263	30	25	100C	300	8.3m		175J	1.5	25	25A	1.0m	10m	100C	30			Si△	DO21⊘
64#	SSiE1102	30	25	150C	400	10m		150J	1 0	30	20J	10u			30			Si△	M324a
65#	SSiE1202	30	25	150C	400	10m		150J	1 0	30	20J	10u			30			Si△	M324a
66	S47	35	90	25$	15				1.2	1 4	25	1.0m			35			Si	A54
67▼	HEP135-RT	40	30m	25$				90†				200u						Ge	TO18
68#	1S456	40	10	25A	50			150J	1 1	10	25A	.50u			35			Si*	DO7
69	S14△	40	100m	25	15				1 2	150m	25	1 0m			40			Si	A54
70	S33△	40	20	25$	15				1 2	30	25	1.5m			40			Si	A54
71	S78	40	1 6	25$	20				1 2	2 5	25	50u			40			Si	S11
72#	1S443△	40	3 0	100	3 6	20m	300	150A	1 5	3.0	25					82		Si	S4a⊘
73	MR2264	40	25	100C	300	8 3m		175J	1.5	25	25A	1.0m	10m	100C	40			Si△	DO21⊘
74	G5A3	50		150C	1 5k			175J	1 3	200	25C		5 0m	150C	50			Si	DO8
75	S49	50	30m	25$	15				1 2	50m	25	1 5m			50			Si	A54
76#	SD50	50	04	25A$				150A				10u			50			Si	
77	1N879	50	05	25A$	50			200S	.60	.05			02m		50			Si	A1bz
78	P1B5	50	05	50	30			175	1 0	05	25	10u	50m	100	50			Si	M343
79	1N868	50	10	25A$	1 0			200S	60	.10			02m		50			Si	A1bz
80#	1S358S	50	10	25	40	1		150	1 2	.10	25A	10u		25A	35			Si*	A1ce
81	S200△	50	10	25$	15				1 2	15	25	100u			50			Si	A54
82	P2B5	50	10	50	30			175	1 0	10	25	10u	50m	100	50			Si	M343
83#	BY141	50	125 ⊘	50A	6 0 †§	200m		85A	1 7	2.5	25A	2 0u			50			Si△	C42j
84	1N359	50	15	25$				150C	2 0	20	25C		250u⊘	100A	50			Si	DO2
85	1N857	50	15	25A$	1 5			200S	60	15			02m		50			Si	A1bz
86	M67A	50	15	50	50	8 3m		175	1 2		25	10u						Si	A3h
87	CER67A	50	15	75A	48	4 0m		150A	1 2	15	100	10u△	20m	100	50			Si	DO27
88	1N359A	50	15	100	10			150	60 ⊘	25	25C	1 0u	01m	100A	50			Si	DO2
89#	BA192	50	150m	150J	2 0	1 2	600m	175J	920m§	400m	65	200n	25n	100	50			Si	A31g
90	A5A2	50 †	15	200A	45			200A	1 0	75	25	1.0u△	20m⊘	150	50			Si	A84
91	1N846	50	20	25A$	2 0			200S	60	20			.02m		50			Si	A1bz
92#	1S120⊘	50	20	25A	1 0	1		150A	1 0	20	25A	10u	01m	100	50			Si△	A1
93	A1A1	50	20	25	60			175A	50		150	1 0u	.50m	150	50			Si	A84a
94	A1A5	50	20	25	60			175A	50		150	5 0u	50m	150	50			Si	A84a
95	A1A9	50	20	25	60			175A	50		150	10u	50m	150	50	100	200u	Si	A84a
96	B1A1	50	20	25	60			175A	50		150	1 0u	.50m	150	50			Si	A1rx
97	B1A5	50	20	25	60			175A	.50		150	5 0u	50m	150	50			Si	A1rx
98	B1A9	50	20	25	60			175A	50		150	10u	.50m	150	50	100	200u	Si	A1rx
99#	BY183-50	50	200m	25A	2 1	10m		100J	1 2	100m		1 0u			50			Si△	DO7
100	CD1121	50	20	25$	2 5			200A					100u⊘	100A	50			Si	A1bz
101	PS005	50	200m	25A	3 2	10m		200A	1.0	100m	25A		100u⊘	100A	50			Si	A60p
102	PS2411	50	20	25A$					2 0	.05	25A	5 0u			50			Si	C15
103	TM3	50	20	25C				125C	2 0	20	100C		30m⊘	100C	50			Si	S145
104	K1A5	50	20	50	60			150C	2 0	.20	25	5 0u	50m	100C	50			Si	
105	P3B5	50	20	50	30			175	1 0	.20	25	10u	50m	100	50			Si	M343
106	AM3	50	20	100C$	8 0 §	8 0m		125A	1 25	20	25C		30m⊘	100C	50			Si	DO4
107	1N2013	50	20	150A$				175A	1 5	50	25	1 0u	50m⊘	150	50			Si	DO12
108	1N3072	50	20	150A$				175J	1 5	50	25		50m	150	50			Si	A84
109	S22A	50	25	25A$	15				1 2	40	25	15u			50			Si	A54
110	M67B	50	25	50	50	8 3m		175	1 2		25	10u						Si	A3h

SYMBOLS AND CODES EXPLAINED IN INTERPRETER

5. RECTIFIERS

IN ORDER OF (1) PIV, (2) MAX AVG FWD CURRENT (3) TEMPERATURE, and (4) TYPE No.

LINE No.	4 TYPE No.	1 PIV (V)	MAX AVG FWD DC CURRENT 2 Io (A)	3 at TEMP (°C)	MAX RATINGS @ 25°C SURGE CUR. PEAK 1 Cy (A)	PULSE WIDTH (s)	DISS. (W)	MAX. TEMP (°C)	MAXIMUM FORWARD VOLTAGE DROP Vf (V)	at If (A)	at TEMP (°C)	MAX. REVERSE CURRENT Ir @25°C & Vr (A)	Ir at T & Vr (A)	TEMP T (°C)	TEST VOLT Vr (V)	AVALANCHE RATINGS MAX V BKDN. (V)	MIN SLOPE (A/V)	MAT.	DESCRIPTION DWG. No.
1	CER67B	50	25	75A	48	4 0m		150A	1.2	25	100	10uΔ	20m	100	50			Si	DO27
2	1N316	50	25	100$				200	2.0	40	25C		300uØ	100A	50			Si	DO2
3	1N316A	50	25	100$	10			200	60 Ø	40	25C	1 0uØ	10uØ	100A	50			Si	DO2
4	1N1701	50	30	50A	8.0			125A	1 7	1 0	25A		30mØ	100A	50			Si	A53
5	P4B5	50	.30	50	30			175	1 0	30	25	10u	50m	100	50			Si	M343
6	1N599	50	30	100A	2.0	100m		170S	1 5	20	25	25uΔ			50			Si	DO1
7	1N599A	50	30	100A	2 0	100m		170S	1 5	40	25	1 0uΔ			50			Si	DO1
8	AM405	50	.40	25A				150A	1 2	40	25A			150A	50			Si	DO7
9#	BYX60-50	50 Ø	400mØ	25A	2 5			125A	1 15 Ø	400m	25A	450n	55u	100A	50			SiΔ	DO7
10	PS405	50	40	25A	3 3	10m		200A	1 5	50	25A		50m⊠	150A	50			Si	A60p
11	S48	50	40	25$	5 0				1 2	65	25	1 0m			50			Si	A54
12	K2A5	50	40	50	60			150C	2 0	40	25	5 0u	50m	100C	50			Si	
13	P5B5	50	40	50	30			175	1 0	40	25	10u	50m	100	50			Si	M343
14	1N323	50	40	100$	15			200	2 0	65	25C		300uØ	100A	50			Si	DO2
15	1N323A	50	.40	100$	10			200	.60 Ø	65	25C	1 0u	10u	100A	50			Si	DO2
16	AM2	50 †	.40	100C$	10 §	8 0m		125A	1 25	40	25C		30m⊠	150C	50			Si	DO4
17	AM5	50	40	150C$					2 0	3 0	25C		.50m⊠	150C	50			Si	DO4
18#	BY124Δ	50	425	50A	4 5 §	10m		100A	1 4	2 0	25A	.50u	.01m	70A	50			SiΔ	C42j
19	A2A4	50	475	25	40	8 3m		175	1 2	50	25	1 0u	.50m	150	50			Si	A84
20	1N1251	50	50	25A	15			165A	1 0 Ø	50	25A		50m	125A	50			Si	A53
21	1N2080	50	50	25$	15			150A	75 Ø	50	25	350uØ			50			Si	A53
22	BR205†	50	500m	25	20	8 0m		150	1 1	500m	50	5 0u			60			SiΔ	M533
23	MT021	50	50	25A	10		50	175A	1 0	50 ⊠	25A	200n	15u	150A	50			Si	A60e
24	MT021A	50	.50	25A	10		50	175A	1 0	50 ⊠	25A	25n	5 0u	150A	50			Si	A60e
25	S22Δ	50	50	25	15			150A	1 2	80	25	10u			50			Si	A54
26	S40⊠	50	50	25$	15				1 2	80	25	500u			50			Si	A54
27	S40A	50	.50	25$	15				1 2	80	25	100u			50			Si	A54
28	PS105	50	50	30A	3 3			200A	1 5	50	25A		50m⊠	150A	50			Si	A47
29	5E05	50	500m	50	50 §			175	1 1	500m	50	2 0u	50u	100	60			SiΔ	DO27
30	5J05	50	500m	50	50 §			175	1 1	500m	50	2 0u	50u	100	60			SiΔ	DO15
31	M67C	50	50	50	50	8 3m		175	1 2		25	10u						Si	A3h
32	P6B5	50	50	50	30			175	1 0	50	25	10u	50m	100	50			Si	M343
33	1N1707	50	50	55A	10			125A	1 3	1 0	25A		40mØ	150A	50			Si	A53
34#	1S310	50	50	70	25	10m		150	1 1	1 0	25	10u		25	50			Si	TO1
35#	DD 000	50	50	70A$	45			100A	82	50	25A		01m	100A	50			SiΔ	A3k
36	CER67C	50	50	75A	48	4 0m		150A	1 2	50	100	10uΔ	20m	100	50			Si	DO27
37	1N1028	50	50	100A	30 §	4 0m		150A	1 5	50	25A	200u			50			Si	A73b
38	5S5	50	50	100				175J	1 3	1 8	25C		2 0m	25C	50			Si	S41b
39	S220	50	.50	100$	15				1 0	80	25	2 0u	300u	150	50			Si	A54
40	S250	50	50	100$	60				1 2	80	25		500u	100	50			Si	A54
41	TKF5	50	50	100A	30	8 3m		175A	1 1	1 0	25A	10u	50mØ	100A	50			Si	A84
42	A2A1	50	60	25	60			175A	50		150	1 0u	50m	150	50			Si	A84a
43	A2A5	50	60	25	60			175A	50		150	5 0u	50m	150	50			Si	A84a
44	A2A9	50	60	25	60			175A	50		150	10u	50m	150	50	100	200u	Si	A84a
45	B2A1	50	.60	25	60			175A	50		150	1 0u	50m	150	50			Si	A1rx
46	B2A5	50	60	25	60			175A	50		150	5 0u	50m	150	50			Si	A1rx
47	B2A9	50	60	25	60			175A	50		150	10u	50m	150	50	100	200u	Si	A1rx
48	ER1	50	60	25A	15			150A	1 25	50	25		07	00	50			Si	A3t
49	S77	50	60	25$	15				1 2	95	25	200u			50			Si	A54
50	K3A5	50	60	50	60			150C	2 0	60	25	5 0u	50m	100C	50			Si	
51	P7B5	50	.60	50	30			175	1 0	60	25	10u	50m	100	50			Si	M343
52	SM205	50	60	50$	20			150	1 2	95	25	10u			50			Si	A84
53	1N2072	50	75	25A$									25m	100A	50			Si	A53
54	1N2103	50 Ø	75	25$				200	1 2	75	25	300u			50			SiΔ	A53
55	1N3237	50	75	25$	15				2 2	75			500u	150	50			Si	A1cs
56	A3A1	50	75	25	60			175A	50		150	1 0u	50m	150	50			Si	A84a
57	A3A5	50	.75	25	60			175A	50		150	5 0u	50m	150	50			Si	A84a
58	A3A9	50	75	25	60			175A	50		150	10u	50m	150	50	100	200u	Si	A84a
59	B3A1	50	75	25	60			175A	50		150	1 0u	50m	150	50			Si	A1rx
60	B3A5	50	75	25	60			175A	50		150	5 0u	50m	150	50			Si	A1rx
61	B3A9	50	75	25	60			175A	50		150	10u	50m	150	50	100	200u	Si	A1rx
62	BR405†	50	750m	25	20	8 0m		150	1 1	750m	25	5 0u			60			SiΔ	M533
63	MB269	50	75	25	15	8 3m	2 0	175A	1 2	50 ⊠	25	2 0u	75u	100	50			Si	A60f
64	S76	50	75	25$	20				1 3	1 2	25	500u			50			Si	S48
65	TS05	50	75	25A	25			125	1 2	75	25A	5 0u						Si	A1ev
66	UT111	50	75	25A	15	8 3m	1 0		1 2	50 ⊠	25A	2 0u	75u	100A	50			Si	A146f
67	XS22	50	75	25	15							10u			50			Si	A54
68#	ZS170	50	750m	25A	70 §			150A	1 2	750m	25A	5 0u	150u	100A	50			Si	A52f
69#	ZR60	50	75	35A	30	10m		150A	1 1	75	25A	10u	15m	100A	50			Si	A42
70	7E05	50	750m	50	60 §			175	1 1	750m	25	2 0u	50u	100	60			SiΔ	DO27
71	7J05	50	750m	50	60 §			175	1 1	750m	25	2 0u	50u	100	60			SiΔ	DO15
72	1N536	50	75	50A	15			150A	1 0	50	25A	10u	20m	150A	50			SiΔ	DO3
73	1N1644	50 †	75	50A	15			165A	50 Ø	25	150A		40mØ	150A	50			Si	A53
74	1N2090	50 †	75	50A	15			100A	50 Ø	50	85A		25mØ	85A	50			SiΔ	M21
75	1N2609	50	75	50A	30			175A	1 1	75	25	10u	.50m	150A	50			Si	A31a
76#	1S030	50	75	50A	40			150A	1 25		25A	2 0u			50			SiΔ	A89
77	A3A3	50 †	75	50A	35			175A	1 1	50	25	10uΔ	30m⊠	150	50			Si	A84
78	CER67F	50	75	50A	50	8 0m		175A	1 2	75	25	10u			50			Si	F29
79	D50	50	75	50	15		1 0	175	1 0	75	25	5 0u			50			Si	A50
80	DK750	50	750m	50A	60			175A	1 2	750m	25A	10u	100u	100	50			Si	DO27
81	H50	50	75	50	15		1 0	175	1 0	75	25	5 0u			50			Si	DO3
82	M67	50	75	50	50	8 3m		175	1 2		25	10u						Si	A3h
83	SM5	50	75	50$	35			175†	1 1	50	25	10u			50			Si	A84
84	TK5⊠	50	750m	50A	15			175C	1 1	500m⊠	25		300u⊠	150	50			Si	A84
85	SC05E	50	75	55A$	50			150A	1 2 Δ	50	25	10u	05m	100	50			Si	A3c
86	1N2858	50	750m	75A	16			125A	1 2	500m	75A		400uØ	100A	50			Si	DO1
87	CER67	50	75	75A	48	4 0m		150A	1 2	75	100	10uΔ	.20m	100	50			Si	DO27
88	MR1337-1	50	75	75A	30 §			175A	1 1	1 0	25A		25m	25A	50			Si	A31a
89	AM005	50	75	150A				150A	1 0	25m	25A		300u⊠	150A	50			Si	DO7
90	K4A5	50	80	50	60			150C	2 0	80	25	5 0u	50m	100C	50			Si	
91#	SR1C1	50	800m	50A	40			150J	1 2 †§	3 0	25A	100m	500u	150J	50				A34d
92	1N607	50	80	100A	3 0	8 3m		150A	1 5	20	25A	25uΔ			50			Si	DO4
93	1N607A	50	80	100A	3 0	8 3m		150A	1 5	40	25A	1 0uΔ			50			Si	DO4
94	A4A1	50	85	25	60			175A	50		150	1 0u	50m	150	50			Si	A84a
95	A4A5	50	85	25	60			175A	50		150	5 0u	50m	150	50			Si	A84a
96	A4A9	50	85	25	60			175A	50		150	10u	50m	150	50	100	200u	Si	A84a
97	B4A1	50	85	25	60			175A	50		150	1 0u	50m	150	50			Si	A1rx
98	B4A5	50	85	25	60			175A	50		150	5 0u	.50m	150	50			Si	A1rx
99	B4A9	50	85	25	60			175A	50		150	10u	50m	150	50	100	200u	Si	A1rx
100	SM105	50	85	50$	45			150	1 0	1 5	25	10u			50			Si	A84
101	SM705	50	85	50	35			125A	1 0	50	25	01u	20m	150	50			Si	A84
102	NS1000	50	1 0		60	8 3m			1 2	1.0		10u			50				
103	1N2266	50	1 0	25$	20			150	60	1 0	25		350u	150	50			SiΔ	DO4
104	1N2267	50	1 0	25$	20			150	60	1 0	25		350u	150	50			SiΔ	S35
105	1N3246	50	1 0	25$	20				1 1	1 0			500u	150	50			Si	A1cs
106#	0710	50	1 0	25	30	10m		125J	1 1	1 0	25	5 0u			50			Si	A1bu
107	A5A1	50	1 0	25	60			175A	50		150	1 0u	50m	150	50			Si	A84a
108	A5A5	50	1 0	25	60			175A	50		150	5 0u	50m	150	50			Si	A84a
109	A5A9	50	1 0	25	60			175A	50		150	10u	50m	150	50	100	200u	Si	A84a
110	B5A1	50	1 0	25	60			175A	50		150	1 0u	50m	150	50			Si	A1rx

SYMBOLS AND CODES EXPLAINED IN INTERPRETER

5. RECTIFIERS

IN ORDER OF (1) PIV, (2) MAX AVG FWD CURRENT (3) TEMPERATURE, and (4) TYPE No.

LINE No.	4 TYPE No	1 PIV (V)	MAX AVG FWD DC CURRENT 2 Io (A)	3 at TEMP (°C)	MAX RATINGS @ 25°C SURGE CUR. PEAK 1 Cy (A)	PULSE WIDTH (s)	DISS (W)	MAX. TEMP (°C)	MAXIMUM FORWARD VOLTAGE DROP Vf (V)	at If (A)	at TEMP (°C)	MAX. REVERSE CURRENT Ir @25°C & Vr (A)	Ir at T & Vr (A)	TEMP T (°C)	TEST VOLT Vr (V)	AVALANCHE RATINGS MAX V BKDN. (V)	MIN SLOPE (A/V)	DESCRIPTION MAT.	DWG. No.
1	B5A5	50	1 0	25	60			175A	50		150	5.0u	50m	150	50			Si	A1rx
2	B5A9	50	1 0	25	60			175A	.50		150	10u	50m	150	50	100	200u	Si	A1rx
3	BR505†	50	1 00	25	25	8 0m		150	1 10	1 0	25	5.0u			60			Si△	M533
4	ii5R0	50	1 0	25	100	1 0u		150	450m	1 0m	25	10u		25	25			Si	A52e
5	NPC0050	50	1 0	25	25			150A	1 1	1 0	25	30u						Si	A3n
6	SD05	50	1 0 ∅	25A	50			100A	1 0	1 0	25A	5 0u			50			Si	A1ev
7	SLA11AB	50	1 0	25	60	8 3m		150A	1 0	1 0	25	1.0u	10m	100	50			Si	A69
8	SLA11C	50	1 0	25	60	8 3m		150A	1 1	1 0	25	5.0u	25m	100	50			Si	A69
9	UR105∅	50	1 0	25A	25	8 3m			1 0	1 0 ⊠	25A	3.0u	05m	100A	50			Si	A146f
10	XS40A	50	1 0	25	15							1.0m			50			Si	A54
11	1B05	50	1 0	50C$	11			150C	2 0	1 0	25	2 0u	05m	100	50			Si	M79
12	1C05	50	1 0	50C$	11			150C	2 0	1 0	25	2.0u	05m	100	50			Si	M116a
13	AA50	50	1 0	50	15		1 0	100	90	1 0	25	5.0u			50			Si	A3p
14	BTB50	50	1 0	50	50	8 0m		150A	1 1	1 0	50	10						Si	DO27
15	BTM50	50	1 0	50	30	8 0m		150A	1 1	1 0	50	10						Si	A1ry
16	CJ05	50	1 0	50	50			150	1 1	1 0	50	5.0u	200u	100	60			Si△	DO15
17	CL05	50	1 0	50A	50			150A	1 1	1 0	50A	5 0u	200u	100A	60			Si△	DO27
18	CM05	50	1 0	50	50			150	1 1	1 0	50	5 0u	200u	100	60			Si△	DO27
19	E05	50	1 0	50	75 §			175	1 1	1 0	25	2 0u	50u	100	60			Si△	DO27
20	EM05	50	1 0	50	75 §			175	1 1	1 0	25	2.0u	50u	100	60			Si△	DO41
21	HA50	50	1 0	50	15		1 0	175	.90	1.0	25	5 0u			50			Si	DO3
22	K5A5	50	1 0	50	60			150C	2 0	1.0	25	5 0u	50m	100C	50			Si	
23▼#	PCP05†	50	1 0	50	50			125S	2 0	1 0	25	10	100u	150	50			Si	M584
24	PF05†	50	1 0	50	50	8 3m		125	1 0	1 0	25	5.0u			50			Si	M544
25	TA50	50	1 0	50	15		1 0	100	90	1 0	25	5 0u			50			Si	M21
26	SC05	50	1 0	55$	50			175	1 2	1 0	25	1.0u	50u	125	50			Si	A1bs
27	SCA05	50	1 0	55$	50			175	1 2	1 0	25	1.0u	50m	125	50	120		Si	A1bs
28	SEN105	50	1 0	55	50	8 3m		170A	1 0	1 0	25	5.0u	300u	150	50			Si△	DO15
29#	SH4D05	50 #	1 0	55A	45	8 3m		115	60 ∅	50	85		40m∅	85	35			Si	M215
30	1N2858A	50 †	1 0	75A	40			135	1 2	1 0	75A		50m	135	50			Si	DO1
31♦	1N4001	50	1 0	75A	30	8 3m		175A	1.6	1 0	75A	10u	30u∅	75A	50			Si	DO41
32	CB5	50	1 0	75A	50	8 0m		175A	1 1	1 0	25A	2.0u	.05m	100	50			Si△	A1bg
33	DI705	50	1 0	75A	30			100	1 0	1 0	25	5.0u			50				A1cm
34	ER181	50	1 0	75A	30 §			175J	1 1	1 0	25A	10u	50m∅	75A	50			Si	DO27
35▼	GER4001	50	1 0	75	30			175	1 1	1 0	25	100u						Si	A249b
36▼	HEP154-RT	50	1 0	75$	30			175†										Si	DO41
37▼	HEP175-RT†	50	1 0	75$	32													Si	M604*
38	J05	50	1 0	75A	50	8 0m	1 0	175A	1 0	1 0	25A	5 0u	50u	100A	50			Si	DO15
39	MR2064	50	1 0	75	30	8 3m		175J	80 ∅	1.0	25	25u	.50m	75	50			Si△	A1ba
40	1F05	50	1 0	100	50		1 0	150C	1 3	2 0	25	2 0u	50u	100	60			Si△	F22
41	1N1034	50	1 0	100A	30 §	4 0m		170C	1 5	1 0	25A	200u			50			Si	S65a
42	1N1040	50	1 0	100A	30 §	4 0m		170C	1 5	1 0	25A	200u			50			Si	S66b
43	1N1046	50	1 0	100A	30 §	4 0m		170C	1 5	1 0	25A	200u			50			Si	S68b
44	A14F	50	1 0	100A	50	8 3m		175J	1 0	1 0	25	5 0u	30m	100	50	1 6k		Si△	A94g
45	AM1	50 †	1 0	100C$	20 §	8 0m		125A	1 25	1 0	25C		30m⊠	100C	50			Si	DO4
46	SI50E	50	1 0	100A	50			150C	1 0	1 0	25A	5.0u			50			Si	DO27
47	SLA50LCD†	50	1 0	100					1 0	1 0		1 0u	100u	100	50			Si	M547
48	SM4	50	1 0	100$	45			200A	1 0	1.2	25	1 0u			50			Si	A84
49	SM505	50	1 0	100$	45			150†	1 0	1 0	25	10u			50			Si	A84
50	1N2026	50 †	1 0	150C	25	8 3m		175C	2 0	2 0	25		50m	150C	50			Si	DO4
51▼	A51	50	1 0	150C$	25			150C	1 0	1 0	25	10u	1 0m	150C	50			Si	DO2
52	AM4	50	1 0	150C$	20 §	8 0m		175A	1 25	1 0	25C		50m	150C	50			Si	DO4
53	BY101⊠	50	1 0	150C$	25			150C	90	1 0	25C	4 0u	50m	150C	50			Si	DO2
54	BY111	50	1.0	150C$	25			150C	80	1 0	25C	1 0u	10m	150C	50			Si	DO2
55	BY121	50	1 0	150C$	25			150C	1 0	1 0	25	10u	1 0m	150C	50			Si	DO2
56	E1A3	50	1 0	150	200			175	1 3	1 0	150	10u	1 0m	150	50			Si	DO4
57	HC67F	50	1 1	50A	50	8 0m		175A	1 2	1 1	25	10u			50			Si	F29
58	MH67	50	1 1	50	50	8 3m		175	1 2		25	10u						Si	A3h
59	HC67	50	1 1	75A	75	4 0m		150A	1 2	1 1	100	10u△	20m	100	50			Si	DO27
60	A6A1	50	1 2	25	60			175A	50		150	1.0u	50m	150	50			Si	A84a
61	A6A5	50	1 2	25	60			175A	50		150	5 0u	50m	150	50			Si	A84a
62	A6A9	50	1 2	25	60			175A	.50		150	10u	50m	150	50	100	200u	Si	A84a
63	B6A1	50	1 2	25	60			175A	50		150	1.0u	50m	150	50			Si	A1rx
64	B6A5	50	1 2	25	60			175A	50		150	5.0u	50m	150	50			Si	A1rx
65	B6A9	50	1 2	25	60			175A	50		150	10u	.50m	150	50	100	200u	Si	A1rx
66#	DD2320	50 †	1 2	25A	45			150A	1 0	1 0	25	1 0u	20m	150A	50			Si△	A31k
67	K6A5	50	1 2	50	60			150C	2 0	1 2	25	5 0u	50m	100C	50			Si	
68#	BY126/50	50	1 2	60A	40	10		150J	1 5	5 0	25J	10u			100			Si	DO27
69	TM2	50	1 25	25C				125C	2 0	.80	25		30m⊠	100C	50			Si	S145
70	TM5	50	1 25	35C				175C	2 0	80	25		50m	150	50			Si	S145
71	RA132AA	50	1 3	55A$	60			150A	1 2	1 3	25		30m∅	150	50			Si	A34
72	1N1907	50 ∅	1 5	25A	30	16m	2 0	250	1 0	1 0	25	10u			50			Si△	A86
73	1N2216	50	1 5	25$	20			150	60	1 5	25		500u	150	50			Si△	DO4
74	1N2217	50	1 5	25$	20			150	60	1 5	25		500u	150	50			Si△	S35
75	A7A1	50	1 5	25	60			175A	50		150	1 0u	50m	150	50			Si	A84a
76	A7A5	50	1 5	25	60			175A	50		150	5 0u	50m	150	50			Si	A84a
77	A7A9	50	1 5	25	60			175A	50		150	10u	50m	150	50	100	200u	Si	A84a
78	A121-05†	50	1 50	25	25	8 0m		150	1 10	1 0	25	5 0u			60			Si△	M531
79	A132-05†	50	1.50	25	50	8 0m		150	1 10	1 0	25	5 0u			60			Si△	M532
80	A168-05†	50	1 5	25	50	8 0m		125	1 1	1 0	25	5 0u			60			Si	M575
81	B7A1	50	1 5	25	60			175A	50		150	1 0u	50m	150	50			Si	A1rx
82	B7A5	50	1 5	25	60			175A	50		150	5 0u	50m	150	50			Si	A1rx
83	B7A9	50	1 5	25	60			175A	50		150	10u	50m	150	50	100	200u	Si	A1rx
84	BR805D†	50	1 50	25	50	8 0m		150	1 10	1 0	25	5 0u			60			Si△	M536
85	M1A1	50	1 5	25	250			175A	50		150	2 0u	5.0m	150	50			Si	A1ep
86	M1A5	50	1 5	25	250			175A	50		150	10u	5 0m	150	50			Si	A1ep
87	M1A9	50	1 5	25	250			175A	50		150	10u	5 0m	150	50	100	200u	Si	A1ep
88	SI05	50	1 5	25A	80			150C	1 0	1 5	25A	1 0u			50			Si	A1bc
89#	ZR10	50	1 5	25A	80	10m		150A	1 0	1 5	25A	5.0u	20m	100A	50			Si	A6a
90#	ZR10T	50	1 5	25A	80	10m		150A	1 0	1 5	25A	5 0u	20m	100A	50			Si	S164
91#	ZS270	50	1 5	25A	70 §			150A	1 2	1 5	25A	5 0u	150u	100A	50			Si	A52f
92	1N4816	50 †	1 5	40	50			170	1 3	1 5	40		25m	40	50			Si	DO27
93#	S1M1	50	1 5	40A	47		2 0	170A				10u	300u	150	50			Si△	DO27
94	1 5E05	50	1 5	50A	75 §			175A	1 1	1 5	25A	2 0u	50u	100	60			Si△	DO27
95	1.5J05	50	1 5	50	75 §			175	1 1	1 5	25A	2 0u	50u	100	60			Si△	DO15
96	K7A5	50	1 5	50	60			150C	2 0	1 5	25	5 0u	50m	100	50			Si	
97	P100A△	50	1 5	50	50	8 0m	1 0	170	1.0	1 0	25	5 0u						Si	DO27
98	P150A	50	1 5	50	50	8 3m	1 0	150	1.0	1.0	25	5 0u							DO27
99	1N2390	50	1 5	55A	35			150A	1 2	1 5	25		30m∅	150A	50			Si	A32
100	1N2399	50	1 5	55A	35			150A	1 2	1 5	25		30m∅	150A	50			Si	C8
101	1N2408	50	1 5	55A	35			150A	1 2	1 5	25		30m∅	150A	50			Si	C9
102	1N2417	50	1 5	55A	35			150A	1 2	1 5	25		30m∅	150A	50			Si	F8
103	1N5391	50	1 5	70C	50 §			170C	1 4	1 5	70C		30m	150	50			Si	DO15
104#	DD2020	50	1 5	70A$	45	10m		150A	1 0	1 0	25A		20m	150A	50			Si△	DO3
105▼	CTN50	50	1 5	75	50			175A	1 0			10u			50			Si	M594*
106▼	CTP50	50	1 5	75	50			175A	1 0			10u			50			Si	M594a*
107▼	VB50△	50	1 5	75	50			175A	1 0			10u			50			Si	M594b*
108	1N1052	50	1 5	100A	60 §	4 0m		150A	1 5	1.5	25A	1 0m			50			Si	A167v
109	5F1	50	1 5	100				175J	1 0	2 4	25C		10m	25C	50			Si	S41a
110	1N1227B	50	1 6	50$	30				1 2	1 0	25	10u	30m	150	50			Si	S25a

SYMBOLS AND CODES EXPLAINED IN INTERPRETER

5. RECTIFIERS

IN ORDER OF (1) PIV, (2) MAX AVG FWD CURRENT (3) TEMPERATURE, and (4) TYPE No.

LINE No	4 TYPE No.	1 PIV (V)	MAX AVG FWD DC CURRENT 2 Io (A)	3 at TEMP (°C)	MAX RATINGS @ 25°C SURGE CUR. PEAK 1 Cy (A)	PULSE WIDTH (s)	DISS. (W)	MAX. TEMP (°C)	MAXIMUM FORWARD VOLTAGE DROP Vf (V)	at If (A)	at TEMP (°C)	MAX. REVERSE CURRENT Ir @25°C & Vr (A)	Ir at T & Vr (A)	TEMP T (°C)	TEST VOLT Vr (V)	AVALANCHE RATINGS MAX V BKDN. (V)	MIN SLOPE (A/V)	MAT	DESCRIPTION DWG. No.
1	1N1217	50	1 6	135C	20			175J	1 5	2 5	25J	500u	1 5m	150J	50			Si	DO1
2	1N1227	50	1 6	135C	20			175J	1 5	2.5	25J	500u	1 5m	150J	50			Si	S25
3	1N1227A	50	1 6	135C	20			175J	1 5	2 5	25J	50u	50m	150J	50			Si	S25
4	1N1217B	50 †	1 6	140C	25			175S	1 7	1 4	25	300u∅			50			Si	DO1
5	1N1537	50	1 6	140C	20			175J	1 5	2 5	25J	50u	50m	150J	50			Si	DO4
6	1N1217A	50	1 6	175J$	20			175J	1 5	2 5	25J	50u	50m	150J	50			Si	DO1
7	MDA922-2†	50 †	1 8	55A	100			175J	1 1	750m	25J	20u			50			Si△	M535a
8	NS2000	50	2 0		200	8 3m			1 2	2 0		25u			50				
9	1N2109	50 ∅	2 0	25				200	1 2	75	25	300u			50			Si△	S82
10	AB50	50	2.0	25	15		3 0	100	1 25	1 0	25	5 0u			50			Si	A3q
11	BR705A†	50	2 00	25	25	8 0m		150	1 20	1 0	25	5 0u			60			Si△	M534
12	GR16	50	2 0	25	20			125	1 1	1 0	25	10u	30m	150	50			Si	A1ry
13	M2A1	50	2 0	25	250			175A	50		150	2.0u	5 0m	150	50			Si	A1ep
14	M2A5	50	2 0	25	250			175A	50		150	10u	5 0m	150	50			Si	A1ep
15	M2A9	50	2 0	25	250			175A	50		150	10u	5 0m	150	50	100	200u	Si	A1ep
16	S37	50	2 0	25$	20				1 2	3 0	25	100u			50			Si	S48
17	SEN205	50	2 0	25	150	8 3m		170A	1 2	2 0	50		25u	50	50			Si△	DO27
18	SLA21A	50	2 0	25	80	8 3m		150A	95	2 0	25	1 0u	10m	100	50			Si	A69
19	SLA21B	50	2 0	25	80	8 3m		150A	1.0	2 0	25	1 0u	10m	100	50			Si	A69
20	SLA21C	50	2 0	25	80	8 3m		150A	1 0	2.0	25	5 0u	25m	100	50			Si	A69
21	UR205∅	50	2 0	25A	40	8 3m			1 0	2 0 ∅	25A	3 0u	05m	100A	50			Si	A146f
22	UT2005	50	2 0	25A	60	8 3m		175A	1 0	1 0 ∅		5 0u	10m	100A	50			Si	A146m
23#	SR3AM1	50	2 0	40A	150 §	8 3m		150J	1 1	10	25A	100u	1 0m	150J	50			Si△	A1fn
24	1N5171	50	2 0	50A	200			175A	1 2 †	2 0	50A		25u	50A	50			Si	DO27
25	20A05	50	2 0	50	50			170A	1 3	2 0	50	10u	.25m	50	50			Si	DO27
26	B172-5	50	2 0	50	60			150C	2 0	2 0	25	5 0u	.50m	100	50			Si	
27	BFW50†	50	2 0	50A	50			100C	1.1	1 0	25A								M40a
28▼	FW50†	50	2 0	50A	50			125A	900m	1 0	25A	5 0u						Si	M40a
29	K8A5	50	2 0	50	60			150C	2 0	2 0	25	5 0u	50m	100	50			Si	
30▼#	MCP05†	50	2 0	50	50			125S				10u	100u	125	50			Si	S349
31	PD05	50	2 0	50A	50			125A	90	1 0	25A	5 0u						Si	M40a*
32	SI05A	50	2 0	50A	80			150C	1 0	3 0	25A	1 0u			50			Si	A1bc
33	2F05	50	2 0	75C	50			150C	1 3	2 0	25C	2 0u	50u	100C	60			Si△	F22
34	HB50	50	2 0	75A	200			175C	1 0	2 0	25A	5 0u			50			Si	A179b
35	FB050†	50	2 0	100	50 §	8 0m		150A	1 0	1 0	25	10u†						Si△	M79a
36#	SR2B1	50	2 0	124C	60			150J	1 2 †§	3 0	25C	10u	500u	150J	50				S157a
37	M3A1	50	2 5	25	250			175A	50		150	2 0u	5 0m	150	50			Si	A1ep
38	M3A5	50	2 5	25	250			175A	.50		150	10u	5 0m	150	50			Si	A1ep
39	M3A9	50	2.5	25	250			175A	50		150	10u	5 0m	150	50	100	200u	Si	A1ep
40	S38	50	2 5	25$	20				1 2	4 0	25	100u			50			Si	S48
41#	DD3020	50	2 5	65A$	45			150A	1 0	1 0	25A		40m	150A	50			Si△	S164a
42#	SJ053F	50 †	2 5	100A	30			150A	1 0	75	25A	10u	30m	150A	50			Si△	DO3
43	1N2524	50	2 5	150C$	50			150C	1 2	4 0	25C	4 0u	50m	150C	50			Si△	DO10
44	1N2535	50	2 5	150C$	50			150C	1 0	4 0	25C	1 0u	10m	150C	50			Si△	DO10
45	1N2546	50	2 5	150C$	50			150C	1 5	4.0	25C	10u	1 0m	150C	50			Si△	DO10
46	BY201	50	2 5	150C$	50			150C	1 2	2 5	25C	4 0u	50m	150C	50			Si△	DO4
47	BY211	50	2 5	150C$	50			150C	1 0	2 5	25C	1 0u	10m	150C	50			Si△	DO4
48	BY221	50	2 5	150C$	50			150C	1 5	2 5	25C	10u	1 0m	150C	50			Si△	DO4
49	BY301	50	2 5	150C$	50			150C	1 2	2 5	25C	4 0u	50m	150C	50			Si	S35
50	BY311	50	2 5	150C$	50			150C	1 0	2 5	25C	1 0u	10m	150C	50			Si	S35
51	BY321	50	2 5	150C$	50			150C	1 5	2.5	25C	10u	1.0m	150C	50			Si	S35
52	MA5	50	2 5	150B	30			190B	1 0 △	2 5	150B	15u△						Si△	DO4
53	TM1	50	2 7	25C				125C	2 0	2 0	25		30m∅	100	50			Si	S145
54	NS3000	50	3 0		300	8.3m			1 2	3 0		25u			50				
55	AC50#	50	3 0	25A	50			150C	1 0	3 0	25A	5 0u			50			Si	A1ey
56	BR805A†	50	3 0	25	50	8 0m		150	1 2	1 5	25	5 0u			60			Si△	M534
57▼	HEP161-RT	50	3 0	25$	300			175†										Si	A179
58▼	HEPR0080-RT	50	3 0	25$	300			175†										Si	M603
59▼	HEPR0090-RT	50	3 0	25$	300			175†										Si	A179
60	u5R2	50	3 0	25	150	1 0u		150	950m	3 0	25	25u		25	25			Si	S318
61	M4A1	50	3 0	25	250			175A	50		150	2 0u	5 0m	150	50			Si	A1ep
62	M4A5	50	3 0	25	250			175A	50		150	10u	5.0m	150	50			Si	A1ep
63	M4A9	50	3 0	25	250			175A	50		150	10u	5 0m	150	50	100	200u	Si	A1ep
64	UT3005	50	3 0	25A	80	8 3m		175A	1 0	2 0 ∅		5 0u	10m	100A	50			Si	A146m
65	1N4997	50 †	3 0	40A	300 §			175A	1 0 †	3 0	75A		2 0m	175A	50			Si	M176a
66	1N2348	50	3 0	50C	15			150A	1 1	1 0	25							Si	S19h∅
67	1N4139	50	3 0	50A	300			175A	1 0	3 0	50A		10m	50A	50			Si	A1en
68	A138-05†	50	3 0	50	50	8 0m		150	1 1	3 0	25	5 0u			60			Si	M79c
69	HAB005	50	3 0	50	300	8 3m		150A	1 1	3 0	25	5 0u	150u	100	50			Si	A1ez
70	HIB005	50	3 0	50A	300			175A	1 2	3 0	25A	5 0u	300u	100A	50			Si	A1eu
71	S3A05	50	3 0	50A	300			150C	1 0	3 0	25A	1 0u			50			Si	A1ez
72	1N5197	50	3 0	55	300 §	8 3m		175A	1 0	3.0	55A		7 7m△	175A	50			Si	A1rv
73	JAN1N5197	50	3 0	55A	300			175A	1 0	3 0	25	5 0u	12m	100	50			Si	A1et
74	3S05E	50	3 0	55$	250			150A	95 △	3 0	100A	10u	100u	100	50			Si	A1rv
75	SLA5197	50	3 0	55	300			175	1 0	3.0	25	5 0u	12m	100	50			SL	A31a
76	1N4719	50	3 0	75A	300			175A	1 0	3 0	75		2 0m	175	50			Si	A179
77	HC50	50	3 0	75	300		3 0	175	1 0	1.0	25		1.0m	25	50			Si	A179
78	MR2069	50	3 0	75	300	8 3m		175J	50 ∅	3 0	75	1 0m	3.0m	75	50			Si△	A179a
79	MR2369	50	3 0	75	300	8 3m		175J	1.0	3 0	25	1 0m	3 0m	75	50			Si△	M173
80#	3F5	50	3 0	90B	40	10m		190J	65	3 0	190J	7 0u	12m	175J	50			Si△	DO4∅
81	3E05	50	3 0	100	200	8 0m	3 0	175	1 2	3 0	100	10u	100u	50	60			Si△	A1ec
82	1N5400	50	3 0	105C	200 §			170C	1 2	3 0	105C		50m	150C	50			Si	A3q
83	SEN305	50	3.0	105C	200	8 3m		170A	1 2	3.0	25	5 0u	500u	150	50			Si△	DO27
84#	1S430	50	3 0	125B				150	1 6		25	5 0u			50			Si△	A89
85	1N1581	50	3 0	150C				175B	1 5	6 0	25C		500u∅	150	50			Si	DO4
86	E2A3	50	3 0	150	200			175	1 3	3 0	150	10u	1 0m	150	50			Si	DO4
87	1N1917	50 ∅	4 0	25	30	16m	10	250	1 0	1 0	25	10u			50			Si△	S82
88#	G504	50	4.0	25A	100	10m	4 5	150A	1 2	4 0 †	25		3 0m	125C	50			Si△	DO4
89#	P504	50	4 0	25A	100	10m	4 5	150A	1 2	4 0 †	25		3 0m	125C	50			Si△	S95a
90	UT4005	50	4 0	25A	100	8 3m		175A	1 0	3 0 ∅	25A	5 0u	100u	100A	50			Si	A146m
91	4F05	50	4 0	75	300	8 0m	3 0	175B	1 3	4 0	25	100u	500u	100	60			Si△	F22
92#	SJ054F	50 †	4.0	100A	15			200A	1 0	750m	25A	10u	1 5m	200A	50			Si△	DO3
93	MR5	50	4 5	150B	70			185B	1 0 △	4 5	150B	20u△						Si△	DO4
94	1N1612	50	5.0					175A	1 5	10	25A							Si	DO4
95	1N2228	50	5 0	25$	20			150	.60	1 5	25		500u	150	50			Si△	DO4
96	1N2228A	50	5 0	25$	100			150	60	5 0	25		350u	150	50			Si△	DO4
97	1N2229	50	5 0	25$	20			150	60	1 5	25		500u	150	50			Si△	S35
98	1N2229A	50	5 0	25$	100			150	60	5 0	25		350u	150	50			Si△	S35
99▼#	5PM05†	50	5 0	50	125			150J	2 0	5.0			50u	150	50			Si	M585
100	S5A05	50	5 0	50A	300			150C	1 1	5 0	25A	1 0u			50			Si	A1ez
101	1N1058	50	5 0	100A	60 §	4 0m		170C	1 5	5 0	25A	1 0m			50			Si	S67a
102	1N1064	50	5 0	100A	60 §	4 0m		170C	1 5	5 0	25A	1 0m			50			Si	S66c
103	1N1070	50	5 0	100A	60 §	4 0m		170C	1 5	5 0	25	1 0m			50			Si	S68c
104	5F5	50	5 0	100				175J	1 1	13	25C		10m	25A	50			Si	S41a
105#	SJ053E,K	50 †	5.0	100C	30		3 0	150A	1 0	75	25C	10u	30m	150C	50			Si△	DO4∅
106	366A	50 †	5 0	145C	100			180J	1 1	5 0	25C		10m	180	50			Si	S27
107	1N1612A	50	5 0	150C	150			190J	1 1	6.0	25		50m	150	50			Si△	DO4△
108	407A	50	5 0	150C	125	8 3m		175J	1 1	5.0	25C		2.0m∅	175J	50			Si	DO4
109	E3A3	50	5.0	150	200			175	1 3	5.0	150	10u	1.0m	150	50			Si	DO4
110	F1A3	50	5 0	150C	200			175J	1 3	30	25C		1 0m	150C	50			Si	DO5

SYMBOLS AND CODES EXPLAINED IN INTERPRETER

5. RECTIFIERS

IN ORDER OF (1) PIV, (2) MAX AVG FWD CURRENT (3) TEMPERATURE, and (4) TYPE No.

LINE No	TYPE No [4]	PIV [1] (V)	MAX AVG FWD DC CURRENT Io [2] (A)	at TEMP [3] (°C)	MAX RATINGS @ 25°C SURGE CUR PEAK 1 Cy (A)	PULSE WIDTH (s)	DISS. (W)	MAX. TEMP (°C)	MAXIMUM FORWARD VOLTAGE DROP Vf (V)	at If (A)	at TEMP (°C)	MAX REVERSE CURRENT Ir @25°C & Vr (A)	Ir at T & Vr (A)	TEMP T (°C)	TEST VOLT Vr (V)	AVALANCHE RATINGS MAX V BKDN. (V)	MIN SLOPE (A/V)	DESCRIPTION MAT.	DWG. No.
1	NS6000	50	6 0		300	8 3m			1 2	6 0		25u			50				
2	6A50	50	6 0	25	300	8 0m		175	1 2	6 0	25	25u						Si	S19f
3	BR905A†	50	6 0	25	150	8 0m		150	1 2	3 0	25	10u			60			Si△	M537
4#	DD4020	50	6 0	25	50	10m	7 2	150	1 1	6.0	25	5.0u		25	50			Si	S19
5#	G506△	50	6 0	25A	140	10m	8 0	150A	1 2	6 0 †	25		3 0m	125C	50			Si△	D04
6#	P506	50	6 0	25A	140	10m	8 0	150A	1 2	6 0 †	25		3 0m	125C	50			Si△	S95a
7#	6F5	50	6 0	100A	120 §	10m		190J	65	6 0	100B		2 5m	100B	50			Si△	D04⧄
8	1N1341	50	6 0	150C	66		9 5	190J	1 2	10	25J		10m	25	50			Si	S26
9	1N1341A	50 †	6 0	150B$	150			200J	64 ∅	6.0	150B		3 0m∅	150B	50			Si*	D04
10	1N1341B	50	6 0	150C	150			190J	1 1	6 0			.02m	25C	50			Si△	D04△
11	1N2147	50	6 0	150C$	150			150	1 2	10	25	4 0u	50m	150A	50			Si	D010
12	1N2147A	50	6 0	150C$	150			150	1.0	10	25	1 0u	10m	150	50			Si	D010
13	1N2491	50	6 0	150C				190J	1 1	6.0	25		2 0m⧄	150C	50			Si	D04
14	1N2565	50	6 0	150C$	150			150C	1 5	10	25C	10u	1 0m	150C	50			Si△	D010
15	BY401	50	6 0	150C$	150			150C	1 2	6 0	25C	4 0u	50m	150C	50			Si	S35
16	BY411	50	6 0	150C$	150			150C	1 0	6 0	25C	1.0u	.10m	150C	50			Si	S35
17	BY421	50	6 0	150C$	150			150C	1 5	6.0	25C	10u	1 0m	150C	50			Si	S35
18	BY701	50	6 0	150C$	150			150C	1 2	6 0	25C	4.0u	.50m	150C	50			Si△	D04
19	BY711	50	6 0	150C$	150			150C	1.0	6.0	25C	1 0u	10m	150C	50			Si△	D04
20	BY721	50	6 0	150C$	150			150C	1.5	6 0	25C	10u	1 0m	150C	50			Si△	D04
21	E4A3	50	6 0	150	200			175	1 3	6 0	150	10u	1 0m	150	50			Si	D04
22	KR602AA	50	6 0	150S$	75			175S	1 2	6 0	150S		1.0m	150S	50			Si	D010
23	1N1612R	50	7 0	150B	150			190A	700m	1 0	190J							Si	D04
24	UT5105	50	7 5	100C	150	8.3m		175A	1 0	5 0 ⧄	25	10u	30m	100	50			Si	S277⧄
25	MS5	50	7 5	150B	140			185B	1.0 △	7 5	150B	20u△						Si△	D04
26	ıı5R3	50	8 0	25	500	1 0u		150	950m	8 0	25	75u		25	25			Si	S318a
27#	ZR20	50	8 0	25A	80	10m		150A	1 2	5 0	25A	5 0u	20m	100A	50			Si	S235
28#	ZR200	50	8 0	25A$	160	1 0m		150A	1.2	5 0	25A	5 0u	200u	100A	50			Si△	S61△
29	PA05†	50	8 0	55	300	8 3m		150	1.0	2 0	25	10u	100u	100	50			Si	M542
30	E5A3	50	8 0	150	200			175	1 3	8 0	150	10u	1.0m	150	50			Si	D04
31	1N2793	50	8 5	25A	75			175A	1 25	15	150C		5 0m	150C	50			Si	D05
32	UT6105	50	9 0	100C	175	8 3m		175A	1 0	6 0 ⧄	25	10u	30m	100	50			Si	S277⧄
33	1N2246	50	10	25C$	200			150	.60	10	25		1.0m	150	50			Si△	D04
34	1N2246A	50	10	25C$	200			150	60	10	25		50m	150	50			Si△	D04
35	1N2247	50	10	25$	200			150	600m	10	25		1 0m	150	50			Si△	S35
36	1N2247A	50	10	25$	200			150	600m	10	25		500u	150	50			Si△	S35
37	BR1005A†	50	10 0	25	200	8 0m		150	1 2	5.0	25	10u			60			Si△	M538
38#	DD4520	50	10	25	120	2 0m	10	150	1 0	10	25	10u		25	50			Si	S19
39#	G510△	50	10	25A	230	10m	17	150A	1 1	10 †	25		3 0m	125C	50			Si△	D04
40#	P510	50	10	25A	230	10m	17	150A	1 1	10 †	25		3 0m	125C	50			Si△	S95a
41#	SJ054E,K	50 †	10	25C	15		4 3	200C	1 0	75	25C	10u	1 5m	200C	50			Si△	D04⧄
42#	1S160	50	10	120B	200			175	1.6	50	25J		7 0m	175J	50			Si△	S103
43	367A	50 †	10	130C	150			180J	1 2	10	25C		10m	180C	50			Si	S27
44	408A	50	10	145C	175	8 3m		175J	1 2	10	25C		2 0m⧄	175J	50			Si	D04
45	1N248	50	10	150$				175S	1 5	25	25		5 0m⧄	150C	50			Si	D05
46	40108	50	10	150C	140 §			175C	.60	10	150C	75u△	2 0m∅	150C	50			Si△	D04
47	E6A3	50	10	150	200			175	1 3	10	150	10u	1 0m	150	50			Si	D04
48	F2A3	50	10	150C	200			175J	1 3	30	25C		1 0m	150C	50			Si	D05
49▼	HEPR0130-RT	50	12	25$	300			190†										Si	D04
50	SL50	50	12	50A	300			175C	1 4	12	25A		2 0m	150A	50			Si	D04⧄
51#	2AF05	50	12	60A	140 §	10m	1 8	190J	95	12			2 0m	150J	50			Si	M324b#⧄
52#	2AF05LV	50 #	12	60A	140 §	10m		190J	95	12			2 0m	150J	50			Si	M324d#⧄
53	5J3P	50	12	100A	150	4 0m		100A	1 3			2 5m			50			Si	S23
54	UT8105	50	12	100C	200	8 3m		175A	1 0	8 0 ⧄	25	10u	30m	100	50			Si	S277⧄
55#	SR10L1S	50	12	120C	200			150J	1 2 †	40	25C		1 5m∅	150J	50			Si	S249a
56#	2AF05LH	50 #	12	140A	140 §	10m	1 8	190J	95	12			2 0m	150J	50			Si	M324c#⧄
57#	2AF05PLH	50 ∅	12	140B	160 §	10m		190B	55 ∅	12 †	25A		1 5m	150B	50			Si	M324c⧄
58#	2AF05PLV	50 ∅	12	140B	160 §	10m		190B	550m∅	12 †	25A		1.5m	150B	50			Si	M324d⧄
59#	2AF05PPF	50 ∅	12	140B	160 §	10m		190B	550m∅	12 †	25A		1 5m	150B	50			Si	M324f⧄
60#	2AF05PPP	50 ∅	12	140B	160 §	10m		190B	550m∅	12 †	25A		1 5m	150B	50			Si	M324e⧄
61	1N1199	50 *	12	150C	100		18	190J	1.4	20	25J	10u			50			Si	S27
62	1N1199A	50	12	150B$	240			150B	1 3	12	25A		3 0m	150A	50			Si△	D04△⧄
63	1N1199B	50	12	150C$	250			150B	1 1	12	25A		1.0m	150A	50			Si△	D04△
64	1N2576	50	12	150C$	250			150C	1 2	20	25C	8 0u	1 0m	150C	50			Si△	D010
65	1N2587	50 ⧄	12	150C	250			150C	1 0	12		2 0u	20m	150C	50			Si△	D010
66	1N2598	50	12	150C$	250			150C	1 5	20	25C	20u	2 0m	150C	50			Si△	D04
67	BY501	50	12	150C$	250			150C	1 2	12	25C	8 0u	1 0m	150C	50			Si	S35
68	BY511	50	12	150C$	250			150C	1 0	12	25C	2.0u	20m	150C	50			Si	S35
69	BY521	50	12	150C$	250			150C	1 5	12	25C	20u	2 0m	150C	50			Si	S35
70	BY801	50	12	150C$	250			150C	1 2	12	25C	8 0u	1.0m	150C	50			Si△	D04
71	BY811	50	12	150C$	250			150C	1 0	12	25C	2 0u	20m	150C	50			Si△	D04
72	BY821	50	12	150C$	250			150C	1 5	12	25C	20u	2 0m	150C	50			Si	D04
73	E7A3	50	12	150	200			175	1 3	12	150	10u	1.0m	150	50			Si	D04
74	MR1120	50	12	150C	300 §			190J	1 0	12	25C	500u			50			Si△	D04
75	TR1120	50	12	150C	300 §			190J	1 2	12	25C	50u	40m∅	150C	50			Si	D04
76	UR123AA	50	12	150S$	240			175S	1 2	12	25		3 0m	150S	50			Si	D010
77#	SU012	50	12	175C$	150			175S	1 2	12	25		10m	150C	50			Si△	M80
78	MT5	50	14	150B	240			185B	1 0 △	14	150B	100u△						Si△	D04
79▼	HEP151-RT	50	15	25$	250			175†										Si	D05
80▼	HEPR0160-RT	50	15	25$	250			175†										Si	D05
81#	SC0515	50	15	50A$	150			160J	1 1	15	25A	100u	50m	100A	50			Si△	D04
82	SCDA05	50	15	55A	300			150A	1 0	3 0	25A	10u	100u	100A	50			Si	M497
83	SCNA05	50	15	55A	300			150A	1 0	3 0	25A	10u	100u	100A	50			Si	M497
84	SCPA05	50	15	55A	300			150A	1 0	3 0	25A	10u	100u	100A	50			Si	M497
85	1N1076	50	15	100A	150 §	4 0m		170C	1 5	15	25A	20m			50			Si	S68d
86#	RN515	50	15	100C	350	10m	25	125C	1 2	15 †	25		3 0m	125C	50			Si△	D05
87#	SR10F1S	50	15	115C	200			150J	1 2 †§	40	25C		1 5m	150J	50				M337a
88	368A	50	15	125C	240	8 3m		180J	1 3	15	25C		2 0m⧄	130C	50			Si	D04
89	409A	50	15	125C	250	8 3m		175J	1 3	15	25C		2 0m⧄	175J	50			Si	D04
90#	SR10J1S	50	15	140C	200	8 3m		175	1 2	40	25C		3.0m	175J	50	200	100u	Si△	M337
91	1N3208	50	15	150C	250	8 3m		175C	1.5	40	25C	1 0m	10m	150C	50			Si	S4n
92	703A	50	15	150	250	8 3m	15	175J	1 2	40	25	2 0m	5 0m	175J	50			Si△	M78
93	F3A3	50	15	150C	200			175J	1 3	30	25C		1.0m	150C	50			Si	D05
94#	16F5	50	16	100B	350	10m	17	190	55	16	100		3 5m	175	50			Si	D04
95	1N3615	50	16	155B$	300			175B					3 0m	175B	50			Si△	D04
96	2005	50	16 5	25A	200		4 0 ∅	50A	60 ∅	19	25A		1 0m∅	150C	50			Si	D04#△
97	S5978A,9A	50	18					150C	1 2										A1ss#
98	1N1191	50 *	18	150C	125		30	190J	1 4	30	25J	10u			50			Si	S29
99	40208	50	18	150C	250 §			175A	650m∅	18	150C	100u	3 0m∅	150C	50			Si△	D05⧄
100	V50	50	18	150	300			175	1 7	18	25		2 0m	25	50			Si	D021
101	1N2272	50	20	25$	400			150	60	20	25		1 0m	150	50			Si△	D04
102	ıı5R4	50	20	25	800	1 0u		150	950m	20	25	100u		25	25			Si	S318b
103#	20R2	50	20	100C	250	10m		150J	1 2	60									D05⧄
104#	21PT5	50 *	20	100B	360 §	8 3m		170J	1 2 †	20	25		1 6m	140B	50			Si	M471
105	TR50△	50	20	100C$				175A	2 0				10m∅	100C	50			Si	D05
106	A40F	50	20	110B	300			175B	1 2	20	25J	1 0m			50			Si	S88
107	A41F	50	20	110C	300			175J	1 2	20	25J	1 0m			50			Si	S88
108	A44F	50	20	110C	300			175J	1 2	20	25J	1 0m	10m∅	150J	50			Si	M76⧄
109#	1S170	50	20	120B	400			175	1 6	100	25J		16m	175J	50			Si△	S102
110	417A	50	20	150C	350	8 3m		175J	1 05	20	25C		2 0m⧄	150C	50			Si	D05

SYMBOLS AND CODES EXPLAINED IN INTERPRETER

5. RECTIFIERS

IN ORDER OF (1) PIV, (2) MAX AVG FWD CURRENT (3) TEMPERATURE, and (4) TYPE No.

LINE No	4 TYPE No	1 PIV (V)	MAX AVG FWD DC CURRENT 2 Io (A)	3 at TEMP (°C)	MAX RATINGS @ 25°C SURGE CUR PEAK 1 Cy (A)	PULSE WIDTH (s)	DISS (W)	MAX TEMP (°C)	MAXIMUM FORWARD VOLTAGE DROP Vf (V)	at If (A)	at TEMP (°C)	MAX REVERSE CURRENT Ir @25°C & Vr (A)	Ir at T & Vr (A)	TEMP T (°C)	TEST VOLT Vr (V)	AVALANCHE RATINGS MAX V BKDN. (V)	MIN SLOPE (A/V)	MAT	DESCRIPTION DWG. No.
1	F4A3	50	20	150C	600			175J	1 3	50	25C		2 0m	150C	50			Si	DO5
2	TM9	50	21	75C				190S	1 2	12	25		2 0m☑	150	50			Si	S145
3	2105	50	22	120C	200			175J	60 ∅	22	25A		1 0m∅	150C	50			Si△	DO4△
4	S2105	50	22	120C	200		1 0 ∅☑	175J	.60 ∅	22	25A		1 0m∅	150C	50			Si△	DO4△
5	1N1191A	50	22	150B$	100	1		200J	1 2	60	25C		5 0m	175C	50			Si	DO5
6	5Q3	50	24	100$				150	1 5				20m	25	50			Si	S68
7#	25B05T†	50	25		700	20m		150A				25m			50				M563
8	1N3491	50 †	25	25C	300	8 3m		175C	1 7 ∅	18	150C	1 0u	10m	150C	50			Si	DO21
9▼	HEPR0220-RT	50	25	25$	300			175†										Si	DO21☑
10	PB05†	50	25	55	300	8 3m		150	1 0	3 0	25	10u	100u	100	50			Si	M542
11	PBU05†	50	25	55	300	8.3m		150	1 0	3 0	25	10u	100u	100	50			Si	M542a
12▼	S25A05	50	25	55	300	8 3		150	1 0	3 0	25	10u	100u	100	50			Si	M542
13#	4AF05	50	25	60A	350 §	10m	80	190J	95	25			3 0m	150J	50			Si	M324b#☑
14#	4AF05LV	50 #	25	60A	350 §	10m	80	190J	95	25			3 0m	150J	50			Si	M324d#☑
15	25P5	50	25	100C	300			175J	7 0 ∅	25 †	25C		7 0m☑	150C	50			Si△	M38ab☑
16	MR2265	50	25	100C	300	8 3m		175J	1 5	25	25A	1 0m	10m	100C	50			Si△	DO21☑
17#	BYX21L100	50	25	120C	250	10		175J	1 6 †	80	25J		6 0m	125J	45			Si	M80a
18#	SR20F1S	50	25	120C	400			150J	1 2 †§	80	25C		1 5m	150J	50				M337a
19#	SR25A1S	50	25	120C	600			150J	1 2 †§	80	25C		3.0m	150J	50				S249a
20#	DD7120	50	25	139B	400	10m	30	175S	1 3	25	25B	10u	500u	150C	50			Si△	S52d☑
21#	4AF05LH	50 #	25	140A	350 §	10m	80	190J	95	25			3 0m	150J	50			Si	M324c#☑
22#	4AF05PLH	50 ∅	25	140B	400 §	10m		190	55 ∅	25 †	25A		2.0m	150B	50			Si	M324c
23#	4AF05PLV	50 ∅	25	140B	400 §	10m		190	550m∅	25 †	25A		2 0m	150B	50			Si	M324d
24#	4AF05PPF	50 ∅	25	140B	400 §	10m		190	550m∅	25 †	25A		2 0m	150B	50			Si	M324f☑
25#	4AF05PPP	50 ∅	25	140B	400 §	10m		190	550m∅	25 †	25A		2 0m	150B	50			Si	M324e☑
26	25F05	50	25	140				190J	1 0	25	25C		20m	25	50			Si	M56△☑
27	1N2154	50 ∅	25	145B	400			200J	60 ∅	25	145B		5 0m∅	145B	50			Si*	DO5☑
28	418A	50	25	145C	400	8 3m		175J	1 1	25	25C		2 0m☑	145C	50			Si	DO5
29	F5A3	50	25	150C	600			175J	1 3	90	25C		2 0m	150C	50			Si	DO5
30	PBT05$	50	27 5	55	300	8 3m		150	1 0	3 0	25	10u	100u	100	50			Si	M543
31#	ZR30C	50	30	20A$	400	10m		140A	1 2	30	25	500u	2 0m	100	50			Si△	S38
32	1N1434	50	30	25B	160	1	38	175A	1 2	60	25		5 0m	150B	50				S143
33	3105	50	30	25A	200		4 0 ∅	50A	60 ∅	34	25A		1 0m∅	150C	50			Si△	DO5#△
34	ıı5R5	50	30	25	1 0k	1 0u		150	950m	30	25	200u		25	25			Si	S318c
35	PBC05	50	30	55C	300			150C	1 0	3 0	25C	10u	100u	100C	50			Si	M447☑*
36	1N3659	50	30	100C	400 §			175C	70 ∅	25	25		5 0m☑	150	50			Si	DO21
37	705A	50	30	150	400			175	70 ∅	25	25		5 0m☑	150	50			Si△	M78
38	G3A3	50	30	150C	1 5k			175J	1 3	200	25C		5 0m	150C	50			Si	DO8
39#	DD 710	50 *	35	25A				100A	92	35	25A		1 0m	150A	50			Si	S125c
40▼	HEPR0250-RT	50	35	25$	400			190†										Si	DO5
41	1N1183	50	35	140C	500	8 3		140C	1 7	35	140C							Si	S29a
42	35F05	50	35	140	900			190J	1 1	50	25		20m	25	50			Si	M56△☑
43	371A	50 †	35	140C	500	8 3m		190J	1 2	35	25C		20m	190J	50			Si	DO5
44	12735OZ	50	35	150	500	8 3m		200J	1 3	35	25C		5 0m☑	150C	50			Si	DO21
45	1N248A	50	37	40A	600			175J	1 5	50	25		2 0m	150C	50			Si	DO5
46	1N248B	50	37	40A	600			175J	1 5	50	25		2 0m	150C	50			Si	DO5
47	1N1301	50	37	120C$	600			175C	1 5	50	25		2 0m	150C	50			Si	DO5
48#	40B05T†	50	40		1 1k	20m						25u			50				M563
49#	K540	50	40	90C	800	10m	44	125C	1 2	40 †	25		4 0m	125C	50			Si△	S245
50	419A	50	40	120C	500	8 3m		175J	1 2	40	25C		2 0m☑	120C	50			Si	DO5
51	40HF5	50 †	40	140C	500 §	8 3m		180J	1 3	40 †	140C		7 0m☑	140C	50			Si△	S21e☑
52	1N1183A	50	40	150B$	200	1		200J	1 1	100	25C		5 0m	175C	50			Si	DO5
53	G4A3	50	40	150C	1 5k			175J	1 3	200	25C		5 0m	150C	50			Si	DO8
54	127351Z	50	44	150	700	8 3m		200J	1 3	44	25C		5 0m☑	150C	50			Si	DO21
55	TR322	50	45	50C	300			175C	1 5	50	25C	1 0m△	10m☑	150	50			Si	M78
56	1N2446	50	45	60C	300			175B	1 1	20	25		5 0m∅	150B	50			Si△	DO5
57	SLEA05†	50	50		150	16m			1 0	3 0	25	5 0u	100u	100	50			Si	M546
58	1N411B	50	50	100C	525 §			175C	1 5	50	175C		25m	175C	50			Si	DO8
59	S3405	50	50	120C	600		2 0 ∅☑	175J	60 ∅	50	25A		2 0m∅	150C	50			Si△	DO5△
60	50C05	50	50	140	400	1	55	190J	1 1	50	25		20m	150	50			Si	DO5△☑
61	1N2172	50	50	150C	525			175C	1 5	50	150C		25m	150C				Si	DO8
62	MR1200	50	50	150C	800	8 3m		190J	40 ∅	50	150C		10m	150C	50			Si	M226☑
63	1N2458	50	60	60C	450			175B	1 1	30	25		5 0m∅	150B	50			Si△	DO5
64	1N2128	50	60	100C	700 §			175C	1 4	60	115C		30m△	175C	40			Si	DO5
65	1N2128A	50	60	100C	900 §			200C	1 3	60	140C		30m△	200C	40			Si	DO5
66#	KS560	50	60	110C	1 5k	10m	67	150C	1 2	60 †	25		5 0m	125C	50			Si△	S245
67#	25G5	50	60	112B	850 §	10m	60	190B	55 ∅	25	25A							Si*	DO5☑
68	H5A3	50	60	150C	3 0k			175J	1 3	300	25C		10m	150C	50			Si	DO9
69	TR53	50	65	75C				175C	1 5	100	25C		5 0m☑	150C	50			Si	DO5
70	70H5	50	70	125C	1 2k§	8 3m		200J	1 3	70 †	125C		10m☑	125C	50			Si*	DO5☑
71	1N1396	50 †	70	150C	1 2k			190J	1 25	70	150C		30m	150C	50				S14b
72	1N3139	50	70	150C	1 2k			175S	90 △	70	190J		15m∅	150C	50			Si	S206
73	CH109Z2	50	70	150C	1 5k	8 3m		200C	1 3 △	150	150C		15m∅	150C	50			Si*	S53△
74	J4A3	50	70	150C	4 0k			175J	1 2	300	25C		10m	150C	50			Si	DO9
75	J5A3	50	70	150C	4 0k			175J	1 2	300	25C		10m	150C	50			Si	DO9
76	5JH3	50	72		150	4 0m		100A	1 2									Si	S11f☑
77▼	75E05	50	75	150C	850	4 0m		190J	1 0	90	25C		40m	25C	50			Si	S83a△☑
78	75F05	50	75	150C	850	4 0m		190J	1 0	90	25C		40m	25C	50			Si	M56a△☑
79	1N2426	50	100	75C	950			175B	1 1	50	25		10m∅	150B	50			Si△	DO8
80	MR1210SB	50	100	135C	2 0k§	8 3m	160	190J	400m∅	80 †	150C		15m	150C	50			Si△	S199
81	MR1210SL	50	100	135C	2 0k§	8 3m	160	190J	400m∅	80 †	150C		15m	150C	50			Si△	S87a
82	MR1810SB	50	100	135C	2 0k§	8 3m	160	190J	400m∅	80 †	150C		15m	150C	50			Si△	S199m
83	MR1810SL	50	100	135C	2 0k§	8 3m	160	190J	400m∅	80 †	150C		15m	150C	50			Si△	S87f
84	100E05	50	100	150C	2 0k	4 0m		190J	1 0	140	25C		40m	25C	50			Si	S83△☑
85	100F05	50	100	150C	2 0k	4 0m		190J	1 0	140	25C		40m	25C	50			Si	M56a△☑
86	S4205	50	104	120C	1 5k		2 5 ∅☑	175J	60 ∅	104	25A		5 0m∅	150C	50			Si△	DO8△
87	1N1660	50	116	120C	3.0k			175J	1 3	200	25		10m	150	50			Si	S14d
88	10912Z	50	125	150	1 7k	8 3m		200J	1 3	125	25C		10m☑	150C	50			Si	DO8
89	1N2436	50	150	75C	1 2k			175B	1 1	70	25		10m	150B	50			Si△	DO8
90	1N3111	50	150	150C	3 0k			200A	1 2	150	150C		120m	200C	40			Si	DO30
91	S5105	50	160	120C	2 2k		3 0 ∅☑	175J	60 ∅	160	25A		10m∅	150C	50			Si△	DO9△
92	1N1281	50 *	160	125C	1 3k			190J	1 3	210	25J		40m	25	50			Si	S14g
93	1N1291	50 *	160	125C	1 3k			190J	1 3	210	25J		40m	25	50			Si	S8e
94	1N3260	50 †	160	125C	2 0k			190J	1 25	160	125C		12m	125C	50			Si	DO9☑
95	160E05	50	160	150C	5 0k	4 0m		190J	1 0	160	25C		40m	25C	50			Si	S83△☑
96	160F05	50	160	150C	5 0k	4 0m		190J	1 0	160	25C		40m	25C	50			Si	M56a△☑
97	175E05	50	175	150C	5 0k	4 0m		190J	1 0	175	25C		40m	25C	50			Si	S83△☑
98	175F05	50	175	150C	5 0k	4 0m		190J	1 0	175	25C		40m	25C	50			Si	M56a△☑
99	SCDAS05	50	200	55A	900			150A				50u	500u	100A	50			Si	M495
100	SCNAS05	50	200	55A	900			150A				50u	500u	100A	50			Si	M495
101	SCPAS05	50	200	55A	900			150A				50u	500u	100A	50			Si	M495
102	200UB5	50	200	115C	3 5k§	8 3m		165J	1 25	200 †	115C		10m☑	115C	50			Si*	S279☑
103	411A	50	200	130	3 0k	8 3m		200J	1 5	125	130C		8.0m☑	130C	50			Si	DO8
104	MR1220FB	50	200	138C	3 6k	8 3m		190C	40 ∅	160	150C		20m	150C	50			Si△	M227
105	MR1220FL	50	200	138C	3 6k	8 3m		190C	40 ∅	160	150C		20m	150C	50			Si△	M228
106	MR1220SB	50	200	138C	3 6k	8 3m		190C	40 ∅	160	150C		20m	150C	50			Si△	S199a
107	MR1220SL	50	200	138C	3 6k	8 3m		190C	40 ∅	160	150C		20m	150C	50			Si△	S87b
108	410A	50	220	110C	3 0k	8 3m		190J	1 3	150	110C		10m☑	110	50			Si	DO8
109	1N1670	50 *	240	120C	1 8k			190J	1 25	300	25J		50m	25	50			Si	S14f
110	1N3161	50 *	240	120C	3 0k			190J	1 25	240	25C		16m	125C	50			Si	S14f2

SYMBOLS AND CODES EXPLAINED IN INTERPRETER

5. RECTIFIERS

IN ORDER OF (1) PIV, (2) MAX AVG FWD CURRENT (3) TEMPERATURE, and (4) TYPE No.

LINE No.	TYPE No.	1 PIV (V)	MAX AVG FWD DC CURRENT 2 Io (A)	3 at TEMP (°C)	MAX RATINGS @ 25°C SURGE CUR. PEAK 1 Cy (A)	PULSE WIDTH (s)	DISS. (W)	MAX. TEMP (°C)	MAXIMUM FORWARD VOLTAGE DROP Vf (V)	at If (A)	at TEMP (°C)	MAX. REVERSE CURRENT Ir @25°C & Vr (A)	Ir at T & Vr (A)	TEMP T (°C)	TEST VOLT Vr (V)	AVALANCHE RATINGS MAX V BKDN. (V)	MIN SLOPE (A/V)	MAT.	DESCRIPTION DWG. No.
1	1N1330	50 *	240	125C	1 8k			190J	1.25	300	25J		50m	25	50			Si	S14f2
2	1N1376	50 *	240	125C	1.8k			190J	1.25	300	25J		50m	25	50			Si	S14h
3	240E05	50	240	150C	7.5k	4 0m		190J	1.0	240	25C		50m	25C	50			Si	S83a△☑
4	240F05	50	240	150C	7.5k	4 0m		190J	1.0	240	25C		50m	25C	50			Si	M56a△☑
5	1N2054	50	250	100C	4.5k§			200C	1.3 †	250	135C		25m	135	40			Si	DO9
6	CH119Z	50 †	250	100C	4 0k			200S	1.3	250	25C		15m	100C	50			Si	DO8☑
7	S5305	50	250	120C	4 0k		4 0 ∅☑	175J	60 ∅	250	25A		10m∅	150C	50			Si△	DO9△
8	70S5	50	250	135C	4 5k§	8.3m		200J	1.25	250 †	135C		25m☑	135C	50			Si*	S8b2☑
9	70T5△	50	250	135C	4 5k§	8 3m		200J	1.25	250 †	135C		25m☑	135C	50			Si*	S8b1☑
10	1N4044	50	275	120C	5 0k			190J	1.35	275	120C		15m	120C	50			Si	DO9☑
11	CS131Z	50 †	275	120C	4 0k			200	1 3	275	25C		16m☑	130C	50			Si	DO9
12	275E05	50	275	150C	7 5k	4 0m		190J	1.0	275	25C		50m	25C	50			Si	S83△☑
13	275F05	50	275	150C	7.5k	4 0m		190J	1.0	275	25C		50m	25C	50			Si	M56a△☑
14	300U5A	50 †	300	120C	5 0k§	8 3m		200J	1.4	300 †	120C		16m☑	120C	50			Si*	DO9☑
15	MR1230FB	50	300	135C	5.0k	8.3m		190J	40 ∅	240	150C		35m	150C	50			Si	M227a☑
16	MR1230FL	50	300	135C	5 0k	8 3m		190J	.40 ∅	240	150C		35m	150C	50			Si	M228b☑
17	MR1230SB	50	300	135C	5 0k	8 3m		190J	.40 ∅	240	150C		35m	150C	50			Si	S199b☑
18	MR1230SL	50	300	135C	5.0k	8 3m		190J	40 ∅	240	150C		35m	150C	50			Si	S87c☑
19	1N3585	50	400	120C				190J	1.1	520	25C		75m	25C	50			Si	S83a△
20	400F05	50	400	150C	12k	4 0m		190J	1.1	450	25C		75m	25C	50			Si	M56b△☑
21	MR1240FB	50	400	150C	8 0k	8 3m		190J	40 ∅	400	150C		50m	150C	50			Si	M227b☑
22	MR1240FL	50	400	150C	8 0k	8 3m		190J	40 ∅	400	150C		50m	150C	50			Si	M228a☑
23	MR1240SB	50	400	150C	8 0k	8 3m		190J	40 ∅	400	150C		50m	150C	50			Si	S199c☑
24	MR1240SL	50	400	150C	8 0k	8 3m		190J	40 ∅	400	150C		50m	150C	50			Si	S87d☑
25	450E05	50	450	150C	12k	4 0m		190J	1 1	450	25C		75m	25C	50			Si	S83a△☑
26	450F05	50	450	150C	12k	4 0m		190J	1.1	450	25C		75m	25C	50			Si	M56b△☑
27	500UDF5A	50 †	500	130C	9.0k§	8 3m		200J	1.35 †	500 †	130C		30m	130C	50			Si	M448$
28	784A	50	650	150C	8 0k	8 3m		190J	1 3	500	150C		10m☑		50			Si	
29	MR1260	50	650	150C	12k	8 3m		190J	40 ∅	650	150C		100m	150C	50			Si	M228c☑
30	MR2080HA	50 †	750	150C	12k	8 3m		150A	50 ∅	750	150C	4 0m	80m	150C	50			Si△	M228c#☑
31	MR1290	50 $	1 0k	150C	18k	8 3m		190C	40 ∅	1 0k	150C		200m	150C	35			Si△	M306
32	1N248C	55	20	150C	350			175C	60	20	25		3.8m	150C	55			Si△	DO5△
33	1N3160	60 †	03	25A	35	1		105	1.0	5 0	25A		02m	55	10			Ge	A1
34▼	HEP134-RT	60	50m	25$				90†				30u						Ge	TO18
35#	BA127	60	10	25			25	150J	1 1	10	25J	1 0u	.01m	75J	60			Si*	DO7
36#	BYX26-60	60	25	55A	2 5			100A	90	25	25A	1 0u	10m	100A	60	140		Si	DO7
37#	DA000	60	50	25	40	10m	60	100	1 0	1 0	25	1 0u			60	120		Si△	A3k
38#	1S444△	60	3 0	100	2 7	20m	300	150A	1 5	3 0	25					110		Si	S4a☑
39#	MA101	67 #	6 0	25$	25			75					10m	25	25			Ge*	C24
40	JAN1N457	70 *	75m	25				150A	1 0	20m	25	25n	5.0u	150	60			Si	A1dd
41▼	HEP165-RT	70	200m	25$	500m		310m	135†					100n					Si	TO92☑*
42	ED3000	70	50	50	20	8 3m	1 0	100A	1.5 △	1 0	25	10u	03m	100	50			Si△	A1bk
43	ED3000A	70	75	50	25	8 3m	1 0	100A	1.3 △	1 0	25	10u	03m	100	50			Si△	A1bk
44	ED3000B	70	1 0	50	30	8 3m	1 0	100A	1 1 △	1 0	25	10u	03m	100	50			Si△	A1bk
45	S39	70	4 0	25$	20				1.2	6 5	25	100u			70			Si	S48
46	P1C5	75	05	50	30			175	1 0	05	25	10u	50m	100	75			Si	M343
47	S240	75	10	25$					60	15	25	2 0u			25			Si	A55
48	P2C5	75	10	50	30			175	1.0	10	25	10u	50m	100	75			Si	M343
49	P3C5	75	20	50	30			175	1.0	20	25	10u	50m	100	75			Si	M343
50	P4C5	75	30	50	30			175	1.0	30	25	10u	.50m	100	75			Si	M343
51	P5C5	75	40	50	30			175	1 0	40	25	10u	50m	100	75			Si	M343
52	P6C5	75	50	50	30			175	1 0	50	25	10u	50m	100	75			Si	M343
53	P7C5	75	60	50	30			175	1 0	60	25	10u	50m	100	75			Si	M343
54#	GJ4M	75	1 0	25A	6 0			90J	1.0									Ge	S33
55	ıı7R0	75	1.0	25	100	1 0u		150	450m	1.0m	25	10u		25	37			Si	A52e
56	ıı7R2	75	3 0	25	150	1.0u		150	950m	3 0	25	25u		25	37			Si	S318
57	ıı7R3	75	8 0	25	500	1.0u		150	950m	8 0	25	75u		25	37			Si	S318a
58▼#	SSIE2705	75	12	110C	250	10m		110	1 35	23	25J		2.0m	110J				Si△	M324a
59▼#	SSIE2805	75	12	110C	250	10m		110	1 35	23	25J		2.0m	110J				Si△	M324a
60#	BYY20	75	12	175J	140			175J	1.2 ∅	12	25		4 0m	140J	75			Si△	M38
61#	BYY21	75	12	175J	140			175J	1 2 ∅	12	25		4.0m	140J	75			Si△	M38a
62	ıı7R4	75	20	25	800	1 0u		150	950m	20	25	100u		25	37			Si	S318b
63#	SSIE1305	75	25	135C	350	10m		150J	1.1	45	25J	20u			75			Si△	S290△
64#	SSIE1405	75	25	135C	350	10m		150J	1.1	45	25J	20u			75			Si△	S290△
65#	SSIE1105	75	25	150C	400	10m		150J	1 0	30	20J	10u			75			Si△	M324a
66#	SSIE1205	75	25	150C	400	10m		150J	1 0	30	20J	10u			75			Si△	M324a
67	ıı7R5	75	30	25	1 0k	1.0u		150	950m	30	25	200u		25	37			Si	S318c
68#	SD80△	80	038	25A$				150A				10u			80			Si	
69#	1S457	80	10	25A	50			150J	1 1	10	25A	50u			75			Si*	DO7
70#	1S83	80	20	25	2 0	1		70	.50	40	25	30u		25	10			Ge	C1d
71#	LPA1H	80	23	25A	3 0	10m	25	150A	1 09	23	25A	01u	01m	100A	80	150		Si#	DO7
72#	S1M2	80	60	25A	8 0		7 3	125				1 0u	05m	125J	80			Si△	DO14
73#	S1CN1	80	1 5	40A	45		1 7	150A				10u	.25m	150J	80			Si△	A31n
74#	1S445△	80	3 0	100	1 8	20m	300	150A	1 5	3 0	25					160		Si	S4a☑
75#	GEX541	80	10	25A	450	10		65J	550m	8 0	25A		25m	65A	80				S16
76#	S1BR25	80 †	40	120B	250	20m		140B	1.2	40			20m		80			Si*	S122☑
77#	S1CR25	80 †	40	120B	250	20m		140B	1.2	40			20m		80			Si*	S123☑
78#	S1DR25	80 †	40	120B	250	20m		140B	1.2	40			20m		80			Si*	S125☑
79#	S1ER25	80 †	40	120B	250	20m		140B	1.2	40			20m		80			Si*	S124☑
80#	S1BR30	80 †	44	125B	250	20m		140B	1.1	44			16m		100			Si*	S122☑
81#	S1CR30	80 †	44	125B	250	20m		140B	1.1	44			16m		100			Si*	S123☑
82#	S1DR30	80 †	44	125B	250	20m		140B	1 1	44			16m		100			Si*	S125☑
83#	S1ER30	80 †	44	125B	250	20m		140B	1.1	44			16m		100			Si*	S124☑
84#	S1AN70	80 †	77	115B	450	20m		150B	1.0	70			30m		100			Si	F19
85#	S1BR70	80 †	77	115B	450	20m		150B	1 0	70			40m		100			Si	F19
86#	S1AN125	80 †	175	125B	1 1k	20m		150B	1.1	175			30m		100			Si	F19
87	S44	85	40	25$	15				1 2	65	25	200u			85			Si	A54
88#	OA31	85	3.5	45A	90		2 0	75J	.50	2.0	25	40u	4 0m	75J	85			Ge	S13
89#	AYY10-120	85	3 8	25C	90	10m		75J	700m	12	25J	100u	4.0m	75J	85			Ge	DO4
90#	MA242	90	1 5	25A				150	.95	1.5	25		3 0m	25	90			Si△	C53a
91	MA242C	90	3 0	25A				175J	1 0	3.0	25	3 0m			90			Si△	C90
92	1N253	95	1 0	135C	4 0			150A	1 5	1.0	135C		.01m	135C	75			Si	S11a
93	G5B3	100		150C	1 5k			175J	1 3	200	25C		5.0m	150C	100			Si	DO8
94#	MGD25	100	45m	90J			80m	90J	1 0	5 0m	25J	400u			100			Ge☑	DO7
95	1N880	100	05	25A$	50			200S	.60	05			02m		100			Si	A1bz
96	P1D5	100	05	50	30			175	1 0	.05	25	10u	.50m	100	100			Si	M343
97	1N869	100	10	25A$	1 0			200S	60	10			.02m		100			Si	A1bz
98	10R1B	100	10	25	60			175	2 0	10	25	5 0u	.50m	150	100			Si	
99	S201	100	10	25$	15				1 2	15	25	100u			100			Si	A54
100	P2D5	100	10	50	30			175	1.0	10	25	10u	50m	100	100			Si	M343
101	1N360	100	10	100$				150C	2.0	20	25C		250u∅	100A	100			Si	DO2
102	1N3754	100	13	65A	30			100A	1 0	13	25	5 0u			100			Si△	C13
103	1N858	100	15	25A$	1 5			200S	.60	15			02m		100			Si	A1bz
104	PS2412	100	15	25A$					2.0	25m	25A	5.0u			100			Si	C15
105	M68A	100	15	50	50	8 3m		175	1 2		25	10u						Si	A3h
106#	SM150SS	100	15	50	32	20m	15	120	1 0	20	50	10u			100			Si	A138a
107	1N91	100 ∅	15	55A$	25			95A	.22 ∅	15	55A		1 4m∅	55A	100			Ge*	DO3
108	CER68A	100	15	75A	48	4 0m		150A	1 2	15	100	10u△	.20m	100	100			Si	DO27
109	S91△	100	15	80$	25				90	25	25	1 4m			100			Si	A54
110	1N360A	100	15	100A$	10			150	.60 ∅	25	25C	1 0u	.01m	100A	100			Si	DO2

SYMBOLS AND CODES EXPLAINED IN INTERPRETER

5. RECTIFIERS

IN ORDER OF (1) PIV, (2) MAX AVG FWD CURRENT (3) TEMPERATURE, and (4) TYPE No.

LINE No	4 TYPE No.	1 PIV (V)	MAX AVG FWD DC CURRENT 2 Io (A)	3 at TEMP (°C)	MAX RATINGS @ 25°C SURGE CUR PEAK 1 Cy (A)	PULSE WIDTH (s)	DISS. (W)	MAX. TEMP (°C)	MAXIMUM FORWARD VOLTAGE DROP Vf (V)	at If (A)	at TEMP (°C)	MAX. REVERSE CURRENT Ir @25°C & Vr (A)	Ir at T & Vr (A)	TEMP T (°C)	TEST VOLT Vr (V)	AVALANCHE RATINGS MAX V BKDN. (V)	MIN SLOPE (A/V)	DESCRIPTION MAT	DWG. No.
1#	BA193	100	150m	150J	2 0	1.2	600m	175J	920m§	400m	65	200n	25n	100	100			Si	A31g
2	A5B2	100 †	15	200A	45			200A	1 0	75	25	1.0u△	20m⊠	150	100			Si	A84
3	1N676	100	20	25A	2 0	1		175A	1 0	40	25A	1 0u	20m⊘	150A	100			Si	DO7
4	1N847	100	20	25A$	2 0			200S	60	20			02m		100			Si	A1bz
5	A1B1	100	20	25	60			175A	50		150	1 0u	50m	150	100			Si	A84a
6	A1B5	100	20	25	60			175A	50		150	5 0u	50m	150	100			Si	A84a
7	A1B9	100	20	25	60			175A	50		150	10u	50m	150	100	100	200u	Si	A84a
8	B1B1	100	20	25	60			175A	50		150	1 0u	5m	150	100			Si	A1rx
9	B1B5	100	200m	25	60			175A	500m		150	5 0u	500u	150	100			Si	A84a
10	B1B9	100	20	25	60			175A	50		150	10u	50m	150	100	100	200u	Si	A1rx
11#	BY183-100	100	200m	25A	2 0	10m		100J	1 2	100m		1 0u			100			Si△	DO7
12	CD1122	100	20	25$	2 5			200A					100u⊘	100A	100			Si	A1
13#	M12△	100	200m	25A	3 0	10m	250m	150A†	1 0	200m†	25		150u	125A	100			Si△	DO7
14	PS010	100	20	25A	3 3	10m		200A	1 0	10	25A		100u⊠	100A	100			Si	A60p
15	K1B5	100	20	50	60			150C	2 0	20	25	5 0u	50m	100C	100			Si	
16	P3D5	100	20	50	30			175	1 0	20	25	10u	50m	100	100			Si	M343
17	S91⊠	100 ⊘	20	85A$	5 0 §			100S	1 5	20	85A		1 0m	85A	100			Si	DO2
18	AM13	100	20	100C$	8 0 §	8 0m		125A	1 25	20	25C		30m⊠	100C	100			Si	DO4
19	1N340	100	20	150C$	5 0			175B	2 0	40	25		10m⊠	150C	100			Si	DO4
20	1N349	100	20	150C$	5 0			175B	2 0	40	25		50m⊠	150C	100			Si	DO4
21	1N2014	100	20	150A$				175A	1 5	50	25	1 0u	50m⊠	150	100			Si	DO12
22	1N3073	100	20	150A$				175J	1.5	50	25		50m	150	100			Si	A84
23	CODI551	100	25	25$	20			100	1 1	40	25	10u			100			Si	A52g
24	M68B	100	25	50	50	8 3m		175	1 2		25	10u						Si	A3h
25	CER68B	100	25	75A	48	4 0m		150A	1 2	25	100	10u△	20m	100	100			Si	DO27
26	S91H	100 *	25	85A$	5 0 §			150S	1 5	25	85A		50m	85A	100			Si	DO2
27	1N317	100	25	100$				200	2 0	40	25C		300u⊘	100A	100			Si	DO2
28	1N317A	100	25	100$	10			200	60 ⊘	40	25C	1 0u⊘	10u⊘	100A	100			Si	DO2
29	1N530	100	30	25A$	3 0	3 0m		150A	2 0	30	25A	3 0u			100			Si	DO3
30	1N1702	100	30	50A	8 0			125A	1 7	1 0	25A		30m⊘	100A	100			Si	A53
31	P4D5	100	30	50	30			175	1 0	30	25	10u	50m	100	100			Si	M343
32	1N440	100 †	30	100A	15			165A	1 5	30	25	30u			100			Si	DO2
33	1N600	100	30	100A	2 0	100m		170S	1 5	20	25	25u△			100			Si	DO1
34	1N600A	100	30	100A	2 0	100m		170S	1 5	40	25	1 0u△			100			Si	DO1
35	1N677	100	40	25A	2 0	1		175A	1 0	40	25A	1 0u	20m⊘	150A	100			Si	DO7
36	AM410	100	40	25A				150A	1 2	40	25A		30m⊠	150A	100			Si	DO7
37#	BYX60-100	100	400m⊘	25A	2 5			125A	1 15 ⊘	400m	25A	450n	50u	100A	100			Si△	DO7
38#	M14	100	40	25A	3 0	1	50	150A†	1 0	40	25	50u			100			Si△	DO7
39	PS410	100	40	25A	3 3	110m		200A	1 5	50	25A		50m⊠	150A	100			Si	A60p
40	K2B5	100	40	50	60			150C	2 0	40	25	5 0u	50m	100C	100			Si	
41	P5D5	100	40	50	30			175	1 0	40	25	10u	50m	100	100			Si	M343
42	1N324	100	40	100$				200	2 0	65	25C		300u⊘	100A	100			Si	DO2
43	1N324A	100	40	100$	10			200	60 ⊘	65	25C	1 0u	10u	100A	100			Si	DO2
44	AM12	100 †	40	100C$	10 §	8 0m		125A	1 25	40	25C		30m⊠	150C	100			Si	DO4
45#	MT14	100	40	100A	2 0	1	50	200A	1 2	40 †	25		10m	150A	100			Si△	DO7
46	1N339	100	40	150C$	10			175B	2 0	80	25		10m⊠	150C	100			Si	DO4
47	1N348	100	40	150C$	10			175B	2 0	80	25		50m⊠	150C	100			Si	DO4
48#	SG105	100	45	50A	10			150A	1 1	50	25A	50u	30m	150A	100			Si△	C42
49	A2B4	100	475	25	40	8 3m		175	1 2	50	25	1 0u	50m	150	100			Si	A84
50	1N1252	100	50	25A	15			165A	1 0 ⊘	50	25A		50m	125A	100			Si	A53
51	1N2081	100	50	25$	15			150A	75 ⊘	50	25	350u⊘			100			Si	A53
52	1N3227	100	500m	25$	12				3 3	500m			500u	100	150			Si	A1cs
53	BR21†	100	500m	25	20	8 0m		150	1 1	500m	50	5 0u			110			Si△	M533
54	CODI5514	100	50	25$	20			100	1 1	40	25	10u			100			Si	M45
55#	D15C	100	50	25A	30	10m	55	150A	1 2	50 †	25		15m	125A	100			Si△	A100
56#	DA001	100	50	25	40	10m	60	100	1 0	1 0	25	1 0u			100	200		Si△	A3k
57#	J100	100	50	25A	10			175A	1 1	50	25A	5 0u		25A	100			Si△	DO7
58	MB257	100	50	25	10	8 3m	2 0	175A	1 0	2 ⊠	25	1 0u	06m	100	100			Si	A60f
59	MT022	100	50	25A	10		50	175A	1 0	50 ⊠	25A	200n	15u	150A	100			Si	A60p
60	MT022A	100	50	25A	10		50	175A	1 0	50 ⊠	25A	25n	5 0u	150A	100			Si	A60e
61	S10A	100	50	25A$	15				1 2	80	25	50u			100			Si	A54
62	UT221	100	50	25A	10		1 0	175A	1 0	20	25	1 0u	20m	100A	100			Si	A146f
63	WR100	100	50	25A	3 3			200	1 25	50	25A		10m	100	100			Si	DO7
64	PS110	100	50	30A	3 3			200A	1 5	50	25A		50m⊠	150A	100			Si	A47
65	5E1	100	500m	50	50 §			175	1 1	500m	50	2 0u	50u	100	110			Si△	DO27
66	5J1	100	500m	50	50 §			175	1 1	500m	50	2 0u	50u	100	110			Si△	DO15
67#	10AS	100	50	50A	15			100A	1 15	50	25A	10u			100			Si△	DO3
68	M68C	100	50	50	50	8 3m		175	1 2		25	10u						Si	A3h
69	P6D5	100	50	50	30			175	1 0	50	25	10u	50m	100	100			Si	M343
70#	S05-01	100	500m	50	45	10m		125	1 0	500m	25	10u		25	100				A171a
71#	SE05SS	100	50	50	48	20m	55	120	1 1	50	50	10u			100			Si	M98a
72#	SW05SS	100	50	50	48	20m	55	120	1 1	50	50	10u			100			Si	A221d
73	1N1708	100	50	55A	10			125A	1 3	1 0	25A		40m⊘	150A	100			Si	A53
74#	1S1941	100	500m	65A	35			125J	1 2	500m	25A		400m	125J	100			Si	A1bs
75#	1S311	100	50	70	25	10m		150	1 1	1 0	25	10u		25	100			Si	TO1
76	CER68C	100	50	75A	48	4 0m		150A	1 2	50	100	10u△	20m	100	100			Si	DO27
77	S10⊠	100	50	80A	15				1 2	80	25	100u			100			Si	A54
78	1T501	100 †	50 ⊘	85A	35			100A	1 2	30	25	10u	25m	100	100			Si	A3x
79	2T501	100 †	50 ⊘	85A	35			100A	1 2	30	25	10u	25m	100	100			Si	DO1
80	3T501	100 †	50 ⊘	85A	35			100A	1 2	30	25	10u	25m	100	100			Si	DO13
81	4T501	100 †	50 ⊘	85A	35			100A	1 2	30	25	10u	25m	100	100			Si	DO7
82	ERD100	100 †	50 ⊘	85	35			100A	1 2	30	25	10u	25m	100	100			Si	M166
83	1N550	100 †	50	100A	4 0	3 0m		150A	1 5	50	25A	50u			100			Si	DO4
84	1N1029	100	50	100A	30 §	4 0m		150A	1 5	50	25A	200u			100			Si	A73b
85	1N1081	100	500m	100A	30 §	4 0m		150A	1 5	500	25A	2 0m						Si	F22
86	S221	100	50	100$	15				1 0	80	25	2 0u	300u	150	100			Si	A54
87	S251	100	50	100$	60				1 2	80	25		500u	100	100			Si	A54
88	TKF10	100	50	100A	30	8 3m		175A	1 1	1 0	25A	10u	500u⊘	100A	100			Si	A84
89	1N3544	100	60	25A	15			200A	1 0	50	25A	200n	750u	175A	100			Si	A1
90	A2B1	100	60	25	60			175A	50		150	1 0u	500u	150	100			Si	A84a
91	A2B5	100	60	25	60			175A	50		150	5 0u	50m	150	100			Si	A84a
92	A2B9	100	60	25	60			175A	50		150	10u	50m	150	100	100	200u	Si	A84a
93	B2B1	100	60	25	60			175A	50		150	1 0u	50m	150	100			Si	A1rx
94	B2B5	100	60	25	60			175A	50		150	5 0u	50m	150	100			Si	A1rx
95	B2B9	100	60	25	60			175A	.50		150	10u	50m	150	100	100	200u	Si	A1rx
96	ER11	100	60	25A	15			150A	1 25	50	25		75u	100	100			Si	A3t
97	TM13	100	60	25C				125C	2 0	20	25	300n⊠		100C	100			Si	S145
98	1N1692	100 †	60	50A	20			115A	60	25	100A		50m⊘	100A	100			Si	DO3
99#	1S146	100	60	50A	20			120S	1 2	60	25A	30u	25m	100A	100			Si△	A50
100#	5D1	100	60	50A	40	10m		150S	1 2	3 0	25A		200m	100	100			Si	A1bp
101	K3B5	100	60	50	60			150C	2 0	60	25	5 0u	50m	100C	100			Si	
102	P7D5	100	60	50	30			175	1 0	60	25	10u	50m	100	100			Si	M343
103	SD91	100	60	50A	10			125A	1 5	90	25		1 0m	100	100			Si	DO3
104	SM210	100	60	50$	20			150	1 2	95	25				100			Si	A84
105#	5E1	100	70	40A	11	10m		125J	1 0	50	25J	2 5u	20m	125B	100			Si	A35a
106	1N1487	100 †	75	25A	15			140A	55 ⊘	25	125A		40m⊘	125A	100			Si*	DO3
107	1N2073	100	75	25A$									25m	100A	100			Si	A53
108	1N2104	100 ⊘	75	25$				200	1 2	75	25	300u			100			Si△	A53
109	1N3238	100	75	25$	15				2 2	75			500u	150	100			Si	A1cs
110	75R1B	100	75	25	60			175	2 0	75	25	5 0u	50m	150	100			Si	

SYMBOLS AND CODES EXPLAINED IN INTERPRETER

5. RECTIFIERS

IN ORDER OF (1) PIV, (2) MAX AVG FWD CURRENT (3) TEMPERATURE, and (4) TYPE No.

LINE No	4 TYPE No	1 PIV (V)	MAX AVG FWD DC CURRENT 2 Io (A)	3 at TEMP (°C)	MAX RATINGS @ 25°C SURGE CUR. PEAK 1 Cy (A)	PULSE WIDTH (s)	DISS (W)	MAX. TEMP (°C)	MAXIMUM FORWARD VOLTAGE DROP Vf (V)	at If (A)	at TEMP (°C)	MAX REVERSE CURRENT Ir @25°C & Vr (A)	Ir at T & Vr (A)	TEMP T (°C)	TEST VOLT Vr (V)	AVALANCHE RATINGS MAX V BKDN (V)	MIN SLOPE (A/V)	DESCRIPTION MAT.	DWG No.
1	A3B1	100	75	25	60			175A	50		150	1 0u	50m	150	100			Si	A84a
2	A3B5	100	75	25	60			175A	50		150	5 0u	50m	150	100			Si	A84a
3	A3B9	100	75	25	60			175A	50		150	10u	50m	150	100	100	200u	Si	A84a
4	B3B1	100	75	25	60			175A	50		150	1 0u	50m	150	100			Si	A1rx
5	B3B5	100	75	25	60			175A	50		150	5 0u	50m	150	100			Si	A1rx
6	B3B9	100	75	25	60			175A	50		150	10u	50m	150	100	100	200u	Si	A1rx
7	BR41†	100	750m	25	20	8 0m		150	1 1	750m	25	5 0u			110			Si△	M533
8	CODI531	100	75	25$	35			150	1 1	.80	25	1 0u			100			Si	A52g
9	CODI611	100	75	25$	35			150	1 1	.80	25	1 0u			100			Si	A9j
10	MB258	100	75	25	15	8 3m	2 0	175A	1 0	4 ⊘	25	1 0u	06m	100	100			Si	A60f
11	MB270	100	75	25	15	8 3m	2 0	175A	1 2	.50 ⊘	25	2 0u	75u	100	100			Si	A60f
12	S91A	100	75	25$	25				90	1 2	25	1 4m			100			Si	A54
13	TS1	100	75	25A	25			125	1 2	75	25A	5 0u						Si	A1ev
14	UT112	100	75	25A	15	8 3m	1 0		1 2	50 ⊘	25A	2 0u	75u	100A	100			Si	A146f
15	XS10	100	75	25	15							100u			100			Si	A54
16#	ZS171	100	750m	25A	70 §			150A	1 2	750m	25A	5 0u	150u	100A	100			Si	A52f
17#	ZR61	100	75	35A	30	10m		150A	1 1	75	25A	10u	15m	100A	100			Si	A42
18	7E1	100	750m	50	60 §			175	1 1	750m	25	2 0u	50u	100	110			Si△	DO27
19	7J1	100	750m	50	60 §			175	1 1	750m	25	2 0u	50u	100	110			Si△	DO15
20#	1G8	100	75	50A	15			150A	1 1	.75	25A	30u			100			Si△	DO3
21	1N440B	100 †	75	50A	15			165A	1 5	.75	25A	30u	100m	150A	100			Si△	DO3
22	1N537	100	75	50A	15			150A	1 0	.50	25A	10u	20m	150A	100			Si△	DO3
23	1N1081A	100	75	50$	35				1 0	1 0	25	10u			100			Si	F22
24	1N1645	100 †	75	50A	15			165A	50 ∅	25	150A		40m∅	150A	100			Si	A53
25	1N2091	100 †	75	50A	15			100A	50 ∅	.50	85A		25m∅	85A	100			Si△	M21
26	1N2610	100	75	50A	30			175A	1 1	50	25A	10u	50m	150A	100			Si	A31a
27	1N4364	100	75	50A	35	2 0m		175	1 1	75	25	1 0u	30m	175	100			Si	DO3
28#	1S031	100	75	50A	40			150A	1 25		25A	2 0u			100			Si△	A89
29#	1S40	100	75	50A	25			150J	1 2	1 0	25A	5 0u	25m	150A	100			Si△	DO1
30#	1S100⊘	100	75	50A	40			150A	1 0		25A	10u			100			Si△	A89
31	A3B3	100 †	75	50A	35			175A	1 1	50	25	10u△	30m⊘	150	100			Si	A84
32	A100	100	75	50	15		1 0	100	1 0	75	25	5 0u			100			Si	A3p
33	D100	100	75	50	15		1 0	175	1 0	75	25	5 0u			100			Si	A50
34	DK751	100	750m	50A	60			175A	1 2	750m	25A	10u	100u	100	100			Si	DO27
35	H100	100	75	50	15		1 0	175	1 0	75	25	5 0u			100			Si	DO3
36	M68	100	75	50	50	8 3m		175	1 2		25	10u						Si	A3h
37#	P100A#	100	75	50	50	10m		150	1 0	1 0	25	10u			100			Si	DO29
38#	S1SS	100	75	50	48	20m	83	120	1 1	75	50	10u			100			Si	
39	SD91A	100	75	50A	15			125A	1 3	1 2	25		.50m	100	100			Si	DO3
40	SM10	100	75	50$	35			175†	1 1	50	25	10u			100			Si	A84
41▼	SM10#	100	750m	50$	35			175†	1 1	500m	25	10u			100			Si	A84
42#	SW1SS	100	75	50	48	20m	83	120	1 1	75	50				100			Si	
43	TK10	100	75	50A	15			175C	1 1	50	25		300u⊘	150	100			Si	A84
44	1N2859	100	750m	75A	16			125A	1 2	500m	75A		400u∅	100A	100			Si	
45	CER68	100	75	75A	48	4 0m		150A	1 2	75	100	10u△	20m	100	100			Si	DO27
46	MR1337-2	100	75	75A	30 §			175A	1 1	1 0	25A		25m	25A	100			Si	A31a
47	S81	100	75	80$	15				1 2	1 2	25	20u			100			Si	A54
48	1N1556	100	75	100C				150	1 4	60	25		1 0m	100A	100			Si	DO2
49	AM010	100	75	150A				150A	1 0	25m	25A		300u⊘	150A	100			Si	DO7
50	1N1100	100	77	55A	15	8 0m		175A	1 5	12	25A		30m	15A	100			Si	DO1
51#	D18	100	80	25A	30	10m	1 0	150A	1 2	80 †	25		15m	125A	100			Si△	A100
52	EM401	100	80	25	50				1 1	80	25	10u	20m	85A	100				A1bg
53	PE401	100	80	35A$	50			135A	1 1	80	25	10u	20m∅	85A	100			Si	A3w
54#	SR1FM2	100	800m	40A	50			130J	1 2 †§	3 0	25A	100m	300u	130J	100				A1bv
55#	1S1342	100	80	50A	40	8 3m		150J	1 2	3 0	25A	10u∅	50m∅	150J	100			Si△	A89b
56	K4B5	100	80	50	60			150C	2 0	80	25	5 0u	50m	100C	50			Si	
57#	SR1C2	100	800m	50A	40 §	8 3m		150J	1 2	3 0	25A	10u	500u	150J	100			Si△	A34d
58	1N608	100	80	100A	3 0	8 3m		150A	1 5	20	25A	25u△			100			Si	DO4
59	1N608A	100	80	100A	3 0	8 3m		150A	1 5	40	25A	1 0u△			100			Si	DO4
60	A4B1	100	85	25	60			175A	50		150	1 0u	50m	150	100			Si	A84a
61	A4B5	100	85	25	60			175A	50		150	5 0u	50m	150	100			Si	A84a
62	A4B9	100	85	25	60			175A	50		150	10u	50m	150	100	100	200u	Si	A84a
63	B4B1	100	85	25	60			175A	50		150	1.0u	50m	150	100			Si	A1rx
64	B4B5	100	85	25	60			175A	50		150	5 0u	50m	150	100			Si	A1rx
65	B4B9	100	85	25	60			175A	50		150	10u	50m	150	100	100	200u	Si	A1rx
66	SM110	100	85	50$	45			150	1 0	1 5	25	10u			100			Si	A84
67	SM710	100	85	50	35			125A	1 0	50	25	01u	20m	150	100			Si	A84
68	NS1001	100	1 0		60	8 3m			1 2	1 0		10u			100				
69	1N3247	100	1 0	25$	20				1 1	1 0			500u	150	100			Si	A1cs
70	100R1B	100	1 0	25	60			175	2 0	1 0	25	5 0u	50m	150	100			Si	
71#	0700	100	1 0	25	30	10m		125J	1 1	1 0	25	5 0u			100			Si	A1bu
72	A5B1	100	1 0	25	60			175A	50		150	1 0u	50m	150	100			Si	A84a
73	A5B5	100	1 0	25	60			175A	50		150	5.0u	50m	150	100			Si	A84a
74	A5B9	100	1 0	25	60			175A	.50		150	10u	50m	150	100	100	200u	Si	A84a
75	B5B1	100	1 0	25	60			175A	50		150	1 0u	50m	150	100			Si	A1rx
76	B5B5	100	1 0	25	60			175A	50		150	5 0u	50m	150	100			Si	A1rx
77	B5B9	100	1 0	25	60			175A	50		150	10u	50m	150	100	100	200u	Si	A1rx
78	BR51†	100	1 0	25	25	8 0m		150	1 1	1 0	25	5.0u			110			Si△	M533
79	BR81B†	100	1 00	25	50	8 0m		150	1 10	1 0	25	5 0u			110			Si△	M535
80#	E11	100	1 0	25A	50	10m		150A	1 2	1 0 †	25A	1 0u	200u	125A	100			Si△	M62
81	EM501	100	1 0	25	50				1 1	1 0	25	1 0u	10m	100A	100				A1bg
82	ıı10R0	100	1 0	25	100	1 0u		150	450m	1 0m	25	10u		25	50			Si	A52e
83	MB244	100	1 0	25	20	8 3m	2 0	175A	1 0	60 ⊘	25	1 0u	75u	100	100			Si	A60f
84	NPC0100	100	1 0	25	25			150A	1 1	1 0	25	30u						Si	A3n
85	S1010	100	1 0	25A	35			175A	50 ∅	25	150A		50m∅	150A	100	280 △		Si△	A1gf
86	SD1⊘	100	1 0 ∅	25A	50			100A	1 0	1 0	25A	5 0u			100			Si	A1ev
87	SLA12AB	100	1 0	25	60	8 3m		150A	1 0	1 0	25	1 0u	10m	100	100			Si	A69
88	SLA12C	100	1 0	25	60	8 3m		150A	1 1	1 0	25	5 0u	25m	100	100			Si	A69
89	UR110∅	100	1 0	25A	25	8 3m			1 0	1 0 ⊘	25A	3.0u	05m	100A	100			Si	A146f
90	UT236	100	1 0	25A	20	8 3m	4 0	175A	1 0	40 ⊘	25A	2 0u	75u	100A	100			Si	A60
91	VE18X†	100 †	1 0	25	25	8 3m	1 0	150	1 5	1 0	25	10	10	150	100			Si△	M548
92	1N5004	100 †	1 0	40A	35 §			150A	1 3 †	1 0	40A		1 0m	40A	100			Si	DO13
93	1N5055	100 †	1 0	40A	30 §			125A	1 4 †	1 0	50A		25m	100A	100			Si	DO29
94	VE18†	100 †	1 0	40	25	8 3m		150	1 2	1 0	40	10	10	150A	100			Si△	M548
95#	BYX36/150	100	1 0	45A	30	10m		125A	1 2 †	1 0	25A	1 0u	12m	125A	100			Si△	DO7
96	1B1	100	1 0	50C$	11			150C	2 0	1 0	25	2 0u	05m	100	100			Si	M79
97	1C1	100	1 0	50C$	11			150C	2 0	1 0	25	2 0u	05m	100	100			Si	M116a
98	1E1	100	1 0	50A	75 §			175A	1 1	1 0	25A	2.0u	05m	100	100			Si	DO27
99#	1S1061	100	1 0	50A	60	10m	1 0	150A	1 0	1 5	25	10u	10m	125	100	250		Si	A52j
100	10C1△	100 †	1 0	50A				175A	1 2 △	1 0	25A	10u						Si	A50
101	AA100⊘	100	1 0	50	15		1 0	100	90	1 0	25	5 0u			100			Si	A3p
102	BTB100	100	1 0	50	50	8 0m		150A	1 1	1 0	50	10						Si	DO27
103	BTM100	100	1 0	50	30	8 0m		150A	1 1	1 0	50	10						Si	A1ry
104	CJ1	100	1 0	50	50			150	1 1	1 0	50	5 0u	200u	100	110			Si△	DO15
105	CL1⊘	100	1 0	50A	50			150A	1 1	1 0	50A	5 0u	200u	100A	110			Si△	DO27
106	CM1	100	1 0	50	50			150	1 1	1 0	50	5 0u	200u	100	110			Si△	DO27
107	E1	100	1 0	50	75 §			175	1.1	1 0	25	2 0u	50u	100	110			Si△	DO27
108	EM1	100	1 0	50	75 §			175	1 1	1 0	25	2 0u	50u	100	110			Si△	DO41
109▼#	F14A	100	1 0	50A	45			175J	1 0	1 0	25	50u	300u	100	100			Si	A249a
110	HA100	100	1 0	50	15		1 0	175	90	1 0	25	5 0u			100			Si	DO3

SYMBOLS AND CODES EXPLAINED IN INTERPRETER

5. RECTIFIERS

IN ORDER OF (1) PIV, (2) MAX AVG FWD CURRENT (3) TEMPERATURE, and (4) TYPE No.

LINE No	4 TYPE No	1 PIV (V)	MAX AVG FWD DC CURRENT 2 Io (A)	3 at TEMP (°C)	MAX RATINGS @ 25°C SURGE CUR PEAK 1 Cy (A)	PULSE WIDTH (s)	DISS. (W)	MAX. TEMP (°C)	MAXIMUM FORWARD VOLTAGE DROP Vf (V)	at If (A)	at TEMP (°C)	MAX. REVERSE CURRENT Ir @25°C & Vr (A)	Ir at T & Vr (A)	TEMP T (°C)	TEST VOLT Vr (V)	AVALANCHE RATINGS MAX V BKDN (V)	MIN SLOPE (A/V)	MAT	DESCRIPTION DWG. No
1	K5B5	100	1 0	50	60			150C	2 0	1 0	25	5.0u	.50m	100C	100			Si	
2▼#	PCP1†	100	1 0	50	50			125S	2 0	1 0	25	10	100u	150	100			Si	M584
3	PF10†	100	1 0	50	50	8 3m		125	1 0	1 0	25	5.0u			100			Si	M544
4	TA100	100	1 0	50	15		1 0	100	90	1 0	25	5 0u			100			Si	M21
5	SC1#	100	1 0	55$	50			175	1 2	1 0	25	1 0u	05m	125	100			Si	A1bs
6	SCA1	100	1 0	55$	50			175	1 2	1 0	25	1 0u	50m	125	100	240		Si	A1bs
7	SCE1	100	1 0	55$	50			175S	1 0	1 0	25	1 0u	50u	125	100				A1sd
8	SEN110	100	1 0	55	50	8 3m		170A	1 0	1 0	25	5 0u	300u	150	100			Si△	DO15
9#	SH4D1	100 ∅	1 0	55A	45	8 3m		115	60 ∅	50	85		40m∅	85	70			Si	M215
10#	BY126/100	100	1 0	60A	40	10		150J	1 5	5 0	25J	10u			200			Si	DO27
11#	1S1885	100	1 0	65A	60			150J	1 2	1 5	25A		400m	150J	100			Si	A1jw
12	1D1	100	1 0	75C	35			150C	2 0	1 0	50C	2 0u	05m	100C	100			Si	M116*
13	1N2859A	100 †	1 0	75A	40			135	1 2	1 0	75A		50m	135	100			Si	DO1
14♦	1N4002	100	1 0	75A	30	8 3m		175A	1 6	1 0	75A	10u	30u∅	75A	100			Si	DO41
15	5A1	100	1 0	75A	50	8 3m			95	1 0	25A	10u						Si	DO27
16	5MA1	100	1 0	75	50 §			170A	92	1 0	25		200m	100	100			Si	F29
17	10D1	100	1 0	75A	50	8 3m			95	1 0	25A	10u						Si	DO39
18	CA102BA	100	1 0	75A	15			150A	1 2	1 0	25C		3 0m∅	125C	100			Si	A32
19	CB10#	100	1 0	75A	50	8 0m		175A	1 1	1 0	25A	2 0u	50u	100	100			Si△	A1bg
20	CC102BA	100	1 0	75A	15			150A	1 2	1 0	25C		3 0m∅	125C	100			Si	C8
21	CF102BA	100	1 0	75A	1 5			150A	1 2	1 0	25C		3 0m∅	125C	100			Si	F8
22	CP102BA	100	1 0	75A	15			150A	1 2	1 0	25C		3 0m∅	125C	100			Si	C9
23	DI71	100	1 0	75A	30			100	1 0	1 0	25	5 0u			100			Si	A1cm
24	ER182	100	1 0	75A	30 §			175J	1 1	1 0	25A	10u	50m∅	75A	100			Si	DO27
25▼	GER4002	100	1 0	75	30			175	1 1	1 0	25	100u						Si	A249b
26	HAR10	100	1 0	75A	30	8 3m	1 0	175A	1 0	1 0	25	500n	15u	100	100	250		Si	A196a
27	J1	100	1 0	75A	50	8 0m	1 0	175A	1 0	1 0	25A	5 0u	50u	100A	100			Si	DO15
28	MR2065	100	1 0	75	30	8 3m		175J	80 ∅	1 0	25	25u	50m	75	100			Si△	A1ba
29	1F1	100	1 0	100	50		1 0	150C	1 3	2 0	25	2 0u	50u	100	110			Si△	F22
30	1N1035	100	1 0	100A	30 §	4 0m		170C	1 5	1 0	25A	200u			100			Si	S65a
31	1N1041	100	1 0	100A	30 §	4 0m		170C	1 5	1 0	25A	200u			100			Si	S66b
32	1N1047	100	1 0	100A	30 §	4 0m		170C	1 5	1 0	25A	200u			100			Si	S68b
33	1N1551	100	1 0	100C$				150	1 4	60	25		1 0m	100A	100			Si	DO4
34	A14A	100	1 0	100A	50	8 3m		175J	1 0	1 0	25	5 0u	30m	100	100	1 6k		Si△	A94g
35	AM11	100 †	1 0	100C$	20 §	8 0m		125A	1 25	1 0	25C		30m∅	100C	100			Si	DO4
36	DSR1201	100	1 0	100					1 1	1 0		100n							A266
37	G100B	100 †	1 0	100A	50			175A	1 0	1 0	25	10u△	30m∅	100	100			Si	DO29
38#	P100	100	1 0	100A	50			175A	1 0	1 0	25A	10u			100			Si△	DO29
39	SGR100	100	1 0	100A	50			175A	1 0 △	1 0	25A		30m	100A				Si△	DO29
40	SI100E	100	1 0	100A	50			150C	1 0	1 0	25A	5 0u			100			Si	DO27
41	SLA100LCD†	100	1 0	100					1 0	1 0		1 0u	100u	100	100			Si	M547
42	SM11	100	1 0	100$	45			200A	1 0	1 2	25	1 0u			100			Si	A84
43	SM510	100	1 0	100$	45			150†	1 0	1 0	25	10u			100			Si	A84
44	JAN1N253	100 §	1 0	135A$	4 0	1		135A	1 5	1 0	25	10u			75			Si	DO4
45	1N338	100	1 0	150C$				175B	2 0	1 0	25		20m∅	150C	100			Si	DO4
46	1N347	100	1 0	150C$				175B	2 0	1 0	25		50m∅	150C	100			Si	DO4
47	BY102	100	1 0	150C$	25			150C	90	1 0	25C	4 0u	50m	150C	100			Si	DO2
48	BY112△	100	1 0	150C$	25			150C	80	1 0	25C	1.0u	10m	150C	100			Si	DO2
49	E1B3	100	1 0	150	200			175	1 3	1 0	150	10u	1 0m	150	100			Si	DO4
50#	SD91S	100	1 1	40A	40	10m		170A	1 0	600m	25A	50u	200m	150A	200			Si△	DO3
51	HC68F	100	1 1	50A	50	8 0m		175A	1 2	1 1	25	10u			100			Si	F29
52	MH68	100	1 1	50	50	8 3m		175	1 2		25	10u						Si	A3h
53	HC68	100	1 1	75A	75	4 0m		150A	1 2	1 1	100	10u△	20m	100	100			Si	DO27
54	A6B1	100	1 2	25	60			175A	50		150	1 0u	50m	150	100			Si	A84a
55	A6B5	100	1 2	25	60			175A	50		150	5 0u	50m	150	100			Si	A84a
56	A6B9	100	1 2	25	60			175A	50		150	10u	50m	150	100	100	200u	Si	A84a
57	B6B1	100	1 2	25	60			175A	50		150	1 0u	50m	150	100			Si	A1rx
58	B6B5	100	1 2	25	60			175A	50		150	5 0u	50m	150	100			Si	A1rx
59	B6B9	100	1 2	25	60			175A	50		150	10u	50m	150	100	100	200u	Si	A1rx
60#	DD2321	100 †	1 2	25A	45			150A	1 0	1 0	25	1 0u	20m	150A	100			Si△	A31k
61	K6B5	100	1 2	50	60			150C	2 0	1 2	25	5 0u	50m	100C	100			Si	
62	1N151	100 ∅	1 2	55A$	25	33m		85S	70	50	55A		2 4m	55A	100			Ge	M124
63	TM12	100	1 25	25C				125C	2 0	80	25		30m∅	100C	100			Si	S145
64	UT249	100	1 25	25A	20	8 3m	4 0	175A	1 0	50 ∅	25A	2 0u	75u	100A	100			Si	A60
65#	F11	100	1 3	25A	70	10m		150A†	1 2	1 3 †	25		20m	125A	100			Si△	DO13
66	4JA211A	100	1 3	55A$	60			150A	1 2	1 3	25A		30m∅	150	100			Si	A34
67	RA132BA	100	1 3	55A$	60			150A	1 2	1 3	25		30m∅	150	100			Si	A34
68	1N1908	100 ∅	1 5	25A	30	16m	2 0	250	1 0	1 0	25	10u			100			Si△	A86
69	1N2289	100	1 5	25$	20			150	60	1 5	25		500u	150	100			Si△	S35
70	1N2289A	100	1 5	25$	20			150	60	1 5	25		100u	150	100			Si△	DO4
71	1N2290A	100	1 5	25$	20			150	60	1 5	25		100u	150	100			Si△	DO4
72	1N2638	100	1 5	25A	15	8 3m		165A	1 3	1 5	25A	300u			100			Si	M124
73#	1S020	100	1 5	25A	125			150A	1 25	5 0	25A		05m	100C	100			Si△	A89
74#	1S151	100	1 5	25A	15			140	1 3 △	1 0		5 0u△			100			Si*	S42
75	150R1B	100	1 5	25	60			175	2 0	1 5	25	5 0u	50m	150	100			Si	
76	A7B1	100	1 5	25	60			175A	50		150	1 0u	50m	150	100			Si	A84a
77	A7B5	100	1 5	25	60			175A	50		150	5 0u	50m	150	100			Si	A84a
78	A7B9	100	1 5	25	60			175A	50		150	10u	50m	150	100	100	200u	Si	A84a
79	A121-1†	100	1 50	25	25	8 0m		150	1 10	1 0	25	5 0u			110			Si△	M531
80	A132-1†	100	1 50	25	50	8 0m		150	1 10	1 0	25	5 0u			110			Si△	M532
81	A168-1†	100	1 5	25	50	8 0m		125	1 1	1 0	25	5 0u			120			Si	M575
82	B7B1	100	1 5	25	60			175A	50		150	1 0u	50m	150	100			Si	A1rx
83	B7B5	100	1 5	25	60			175A	50		150	5 0u	50m	150	100			Si	A1rx
84	B7B9	100	1 5	25	60			175A	50		150	10u	50m	150	100	100	200u	Si	A1rx
85	BR81D†	100	1 50	25	50	8 0m		150	1 10	1 0	25	5 0u			110			Si△	M536
86	CODI5314	100	1 5	25$	35			150	1 1	80	25	1 0u			100			Si	M45
87	M1B1	100	1 5	25	250			175A	50		150	2 0u	5 0m	150	50			Si	A1ep
88	M1B5	100	1 5	25	250			175A	50		150	10u	5 0m	150	100			Si	A1ep
89	M1B9	100	1 5	25	250			175A	50		150	10u	5 0m	150	100	100	200u	Si	A1ep
90	MB236	100	1 5	25	25	8 3m	2 0	175A	1 0	80 ∅	25	200n	15u	100	100			Si	A60f
91#	SA1M1	100	1 5	25A	47		2 0	150A	2 0	10	25J	10u	300u	150J	100	125 ∅		Si△	DO27
92	SI1	100	1 5	25A	80			150C	1 0	1 5	25A	1 0u			100			Si	A1bc
93	UT251	100	1 5	25A	25	8 3m	4 0	175A	1 0	75 ∅	25A	2 0u	75u	100A	100			Si	A60
94#	ZR11	100	1 5	25A	80	10m		150A	1 0	1 5	25A	5 0u	20m	100A	100			Si	A6a
95#	ZR11T	100	1 5	25A	80	10m		150A	1 0	1 5	25A	5 0u	20m	100A	100			Si	S164
96#	ZS271	100	1 5	25A	70 §			150A	1 2	1 5	25A	5 0u	150u	100A	100			Si	A52f
97	SCBR1	100	1 5	30C	20			150										Si	M45a*
98#	SL103M	100	1 5	30A	30	2 0m		125C	1 34	7 5	25A	5 0u	110u	100C	100			Si△	S33
99	1N4817	100 †	1 5	40	50			170	1 3	1 5	40		25m	40	100			Si	DO27
100#	S2A10	100	1 5	40A	80	10m		150J	1 05 △	1 5	25A		1 6m	25A	100			Si△	A56
101#	S2M1	100	1 5	40A	47 k	2 0m		170A				10u	30m	150	100			Si△	DO27
102#	1S1071	100	1 5	50A	60	10m	1 0	150A	1 0	1 5	25	10u	10m	125	100	250		Si	A52j
103	1 5E1	100	1 5	50A	75 §			175A	1 1	1 5	25A	2 0u	50u	100	110			Si△	DO27
104	1 5J1	100	1 5	50	75 §			175	1 1	1 5	25A	2 0u	50u	100	110			Si△	DO15
105	K7B5	100	1 5	50	60			150C	2 0	1 5	25	5 0u	50m	100	100			Si	
106	P100B	100	1 5	50	50	8 0m	1 0	170	1 0	1 0	25	5 0u						Si	DO27
107	P150B	100	1 5	50	50	8 3m	1 0	150	1 0	1 0	25	5 0u							DO27
108#	SE1 5SS	100	1 5	50	63	20m	1 6k	120	1 1	1 5	50	10u			100			Si	M99
109	1N1563	100	1 5	55A	70	8 3m		175A	1 2	50	25A	5 0u	50m	100	100			Si△	C12
110	1N2391	100	1 5	55A	35			150A	1 2	1 5	25		30m∅	150A	100			Si	A32

SYMBOLS AND CODES EXPLAINED IN INTERPRETER

5. RECTIFIERS

IN ORDER OF (1) PIV, (2) MAX AVG FWD CURRENT (3) TEMPERATURE, and (4) TYPE No.

LINE No	4 TYPE No.	1 PIV (V)	MAX AVG FWD DC CURRENT 2 Io (A)	3 at TEMP (°C)	MAX RATINGS @ 25°C SURGE CUR. PEAK 1 Cy (A)	PULSE WIDTH (s)	DISS (W)	MAX TEMP (°C)	MAXIMUM FORWARD VOLTAGE DROP Vf (V)	at If (A)	at TEMP (°C)	MAX. REVERSE CURRENT Ir @25°C & Vr (A)	Ir at T & Vr (A)	TEMP T (°C)	TEST VOLT Vr (V)	AVALANCHE RATINGS MAX V BKDN. (V)	MIN SLOPE (A/V)	MAT.	DESCRIPTION DWG. No.
1	1N2400	100	1 5	55A	35			150A	1 2	1 5	25		30mØ	150A	100			Si	C8
2	1N2409	100	1 5	55A	35			150A	1 2	1 5	25		.30mØ	150A	100			Si	C9
3	1N2418	100	1 5	55A	35			150A	1 2	1 5	25		30mØ	150A	100			Si	F8
4▼#	1S1849	100	1 5	60A	50	10m		120J	900m	750m	25A	10u			100			Si	M594cØ
5	1N5392	100	1 5	70C	50 §			170C	1 4	1 5	70C		30m	150	100			Si	DO15
6	1N2847	100 †	1 5	75C	15			165A	65 Ø	.50	150C		40mØ	150C	100			Si*	S35
7▼	CTN100	100	1 5	75	50			175A	1 0			10u			100			Si	M594*
8▼	CTP100	100	1 5	75	50			175A	1 0			10u			100			Si	M594a*
9▼	VB100	100	1 5	75	50			175A	1 0			10u			100			Si	M594b*
10	1N1115	100 †	1 5	85C	15			170A	65 Ø	1.5	150		40mØ	150	100			Si	DO4
11	1N1053	100	1 5	100A	60 §	4 0m		150A	1 5	1 5	25A	1 0m			100			Si	A167v
12	1N1085	100	1 5	100A	60 §	4 0m		150A	1 5	1 5	25A	2 0m			100			Si	F22h
13	1N1450	100	1 5	100C$				190J	1 0	2 4	150C		5.0m	25C	100			Si	S41a
14	1N1617	100	1 5	100A$	100	4 0m		100A	1 2	1 5	25		5 0m	25	100			Si	A52
15#	1WS1	100	1 5	100C	25 §	10m		125J	1 5	5 0	100C		1 5m	125J	100			Si*	A19a
16#	SR10F2S	100	1 5	115C	200			150J	1 2 †	40	25C		1.5mØ	150J	100			Si	M337a
17	1N1446	100	1 5	120C				175J	1 3	1 8	25A		2 0m	25C	100			Si	S41b
18	S91B	100	1 6	25$	25				1 2	25	25	1 0m			100			Si	A54
19	1N1228B	100	1 6	50$	30				1 2	1 0	25	10u	300u	150	100			Si	S25a
20	S1210	100	1 6	120C	35		15 ØØ	175J	1 0 Ø	1 0	25A		10mØ	100C	100	1 8k		Si△	DO13△
21	1N1218	100	1 6	135C	20			175J	1 5	2 5	25J	500u	1 5m	150J	100			Si	DO1
22	1N1228	100	1 6	135C	20			175J	1 5	2 5	25J	500u	1 5m	150J	100			Si	S25
23	1N1218B	100 †	1 6	140C	25			175$	1 7	1 3	25	300uØ	10m△	25	100			Si	DO1
24	1N1228A	100	1 6	140C	20			175J	1 5	2.5	25J	50u	50m	150J	100			Si	S25
25	1N1538	100	1 6	140C	20			175J	1 5	2 5	25J	50u	50m	150J	100			Si	DO4
26	1N1218A	100	1 6	175J$	20			175J	1 5	2 5	25J	50u	50m	150J	100			Si	DO1
27	MDA922-3†	100 †	1 8	55A	100			175J	1 1	750m	25J	20u			100			Si△	M535a
28#	10B1	100	1 8	125B	40	10m		175A	1 1	3 0	25A	50u	50m	150A	100			Si△	DO1
29	NS2001	100	2 0		200	8 3m			1 2	2 0		25u			100				
30	200R1B	100	2 0	25	60			175	2.0	2.0	25	5 0u	50m	150	100			Si	
31	AB100	100	2 0	25	15		3 0	100	1 25	1.0	25	5 0u			100			Si	A3q
32	BR71A†	100	2 00	25	25	8 0m		150	1 20	1 0	25	5 0u			110			Si△	M534
33#	F12	100	2 0	25A	70	10m	3 0	150A†	1 2	2 0 †	25		20m	125A	100			Si△	DO13
34	GR17	100	2 0	25	20			125	1 1	1.0	25	10u	30m	150	100			Si	A1ry
35	M2B1	100	2 0	25	250			175A	50		150	2 0u	5 0m	150	100			Si	A1ep
36	M2B5	100	2 0	25	250			175A	50		150	10u	5 0m	150	100			Si	A1ep
37	M2B9	100	2 0	25	250			175A	50		150	10u	5 0m	150	100	100	200u	Si	A1ep
38	MB228	100	2 0	25	25	8 3m	2 0	175A	1 0 △	1 0 Ø	25	25n	5.0u	100	100			Si	A60f
39	SEN2A1†	100	2 0	25	30	8 3m		150A	1 2	1.0		10u	100u	100	200			Si	M79b
40	SEN210	100	2 0	25	150	8 3m		170A	1 2	2 0	50		25u	50	100			Si△	DO27
41	SLA22A	100	2 0	25	80	8 3m		150A	95	2 0	25	1 0u	10m	100	100			Si	A69
42	SLA22B	100	2 0	25	80	8 3m		150A	1 0	2.0	25	1 0u	10m	100	100			Si	A69
43	SLA22C	100	2 0	25	80	8 3m		150A	1 0	2 0	25	5 0u	25m	100	100			Si	A69
44	UR210Ø	100	2 0	25A	40	8 3m			1 0	2 Ø	25A	3 0u	05m	100A	100			Si	A146f
45	UT261	100	2 0	25A	30	8 3m	4 0	175A	1 0	90 Ø	25A	2.0u	75u	100A	100			Si	A60
46	UT2010	100	2 0	25A	60	8 3m		175A	1 0	1 Ø		5 0u	10m	100A	100			Si	A146m
47	VS148X†	100 †	2 0	25	35	8 3m		150	1 5	2 0	25	10	10	150	100			Si△	M532a
48#	SR3AM2	100	2 0	40A	150 §	8 3m		150J	1 1	10	25A	100u	1 0m	150J	100			Si△	A1fn
49	VS148†	100 †	2 0	40	8 0	8 3m		150	1 2	2 0	25	10	10	150	100			Si△	M532a
50	1N5172	100	2 0	50A	200			175A	1 2 †	2 0	50A		25u	50A	100			Si	DO27
51	20A1	100	2 0	50	50			170A	1 3	2 0	50	10u	25m	50	100			Si	DO27
52	B172-10	100	2 0	50	60			150C	2 0	2 0	25	5 0u	50m	100	100			Si	
53	BFW100†	100	2 0	50A	50			100C	1 1	1 0	25A								M40a
54▼	FW100†	100	2 0	50A	50			125A	900m	1 0	25A	5 0u						Si	M40a
55	K8B5	100	2 0	50	60			150C	2 0	2 0	25	5 0u	50m	100	100			Si	
56▼#	MCP1†	100	2 0	50	50			125S				10u	100u	125	100			Si	S349
57	PD10	100	2 0	50A	50			125A	90	1 0	25A	5 0u						Si	M40a*
58	SI1A	100	2 0	50A	80			150C	1 0	3 0	25A	1 0u			100			Si	A1bc
59	BH4R1†	100	2 0	55	45	8 3m		115	1 2 Ø	1 0	85		800uØ	85	70			Si	M151
60	2F1	100	2 0	75C	50			150C	1 3	2 0	25C	2 0u	50u	100C	110			Si△	F22
61	HB100	100	2 0	75A	200			175C	1 0	2 0	25A	5 0u			100			Si	A179b
62	1N1085A	100	2 0	100A	100	4 0m		100A				25n			100			Si	F42
63	FB100†	100	2 0	100	50 §	8 0m		150A	1 0	1 0	25	10u†						Si△	M79a
64#	1S1351	100	2 0	124C	40	8 3m		150J	1 2	3 0	25A	10uØ	50mØ	150J	100			Si△	S48c
65#	SR2B2	100	2 0	124C	60			150J	1 2 †§	3 0	25C	10u	500u	150J	100				S157a
66	40266	100	2 0	150C	35	2 0m		110A	3 0	15	25A	10u			100			Si△	DO1
67#	PSL11A	100 †	2 4	25A	18	10m		150A	80	15	25C		2 5m	100C	100			Si	S225
68	250R1B	100	2 5	25	250			175	2 0	2 5	25	5 0u	50m	150	100			Si	
69	M3B1	100	2 5	25	250			175A	50		150	2 0u	5 0m	150	100			Si	A1ep
70	M3B5	100	2 5	25	250			175A	50		150	10u	5 0m	150	100			Si	A1ep
71	M3B9	100	2 5	25	250			175A	50		150	10u	5 0m	150	100	100	200u	Si	A1ep
72#	SL103F	100	2 5	30A	30	2 0m		150C	1 05	7 5	25A	5 0u	110u	100C	100			Si△	DO1
73#	0241	100	2 5	45	100	10m		150J	1 5	7 8	25	5 0u			75			Si	S87e
74#	SJ103F	100 †	2 5	100A	30			150A	1 0	75	25A	10u	30m	150A	100			Si△	DO3
75	1N2525	100	2 5	150C$	50			150C	1 2	4 0	25C	4 0u	50m	150C	100			Si△	DO10
76	1N2536	100	2 5	150C$	50			150C	1 0	4 0	25C	1.0u	.10m	150C	100			Si△	DO10
77	1N2547	100	2 5	150C$	50			150C	1 5	4 0	25C	10u	1.0m	150C	100			Si△	DO10
78	BY202	100	2 5	150C$	50			150C	1 2	2 5	25C	4 0u	50m	150C	100			Si△	DO4
79	BY212	100	2 5	150C$	50			150C	1 0	2.5	25C	1 0u	10m	150C	100			Si△	DO4
80	BY222	100	2 5	150C$	50			150C	1 5	2 5	25C	10u	1 0m	150C	100			Si△	DO4
81	BY302	100	2 5	150C$	50			150C	1 2	2 5	25C	4 0u	50m	150C	100			Si	S35
82	BY312	100	2 5	150C$	50			150C	1 0	2 5	25C	1 0u	10m	150C	100			Si	S35
83	BY322	100	2 5	150C$	50			150C	1 5	2 5	25C	10u	1 0m	150C	100			Si	S35
84	MA10	100	2 5	150B	30			190B	1 0 △	2 5	150B	15u△						Si△	DO4
85	TM11	100	2 7	25C				125C	2 0	2 0	25		30mØ	100	100			Si	S145
86	NS3001	100	3 0		300	8 3m			1 2	3 0		25u			100				
87	1N2702	100	3 0	25A	15	8 3m		165A	1 3	3 0	25A	200u			100			Si	M125
88	1N2725	100	3 0	25A	15	8 3m		165A	1 3	3 0	25A	300u			100			Si	M126a
89	1N2750	100	3 0	25A	15	8 3m		165A	1 3	3.0	25A	300u			100			Si	M126a
90	30R1	100	3 0	25	200	8 0m	3 0	25	1 0	3.0	25	10u	50u	100	100			Si	A1rz
91	300R1B	100	3 0	25	250			175	2 0	3 0	25	10u	1 0m	150	100			Si	
92	AC100	100	3 0	25A	50			150C	1 0	3 0	25A	5 0u			100			Si	A1ey
93	BR81A†	100	3 0	25	50	8 0m		150	1 2	1 5	25	5 0u			110			Si△	M534
94▼	HEPR0081-RT	100	3 0	25$	300			175†										Si	M603
95▼	HEPR0091-RT	100	3 0	25$	300			175†										Si	A179
96	ıı10R2	100	3 0	25	150	1 0u		150	950m	3.0	25	25u		25	50			Si	S318
97	M4B1	100	3 0	25	250			175A	.50		150	2 0u	5 0m	150	100			Si	A1ep
98	M4B5	100	3 0	25	250			175A	50		150	10u	5 0m	150	100			Si	A1ep
99	M4B9	100	3 0	25	250			175A	50		150	10u	5 0m	150	100	100	200u	Si	A1ep
100	UT3010	100	3 0	25A	80	8 3m		175A	1 0	2 0 Ø		5 0u	10m	100A	100			Si	A146m
101	3BR1†	100	3 00	30	20	8 0m		125C											M530
102	1N4998	100 †	3 0	40A	300 §			175A	1 0 †	3.0	75A		2 0m	175A	100			Si	M176a
103	1N2349	100	3 0	50C	15			150A	1.1	1.0	25							Si	S19hØ
104	1N4140	100	3 0	50A	300			175A	1 0	3 0	50A		10m	50A	100			Si	A1en
105	A138-1†	100	3 0	50	50	8.0m		150	1.1	3 0	25	5 0u			120			Si	M79c
106	CH302BA	100	3 0	50A	15			150A	1 2	1 0	25C		3 0mØ	125C	100			Si	S152a
107	CK302BA	100	3 0	50A	15			150A	1.2	1 0	25C		3 0mØ	125C	100			Si	S153
108	CS302BA	100	3 0	50A	15			150A	1 2	1.0	25C		3 0mØ	125C	100			Si	S152
109	HAB010	100	3 0	50	300	8 3m		150A	1 1	3 0	25	5 0u	150u	100	100			Si	A1ez
110	HIB010	100	3 0	50A	300			175A	1 2	3.0	25A	5 0u	300u	100A	100			Si	A1eu

SYMBOLS AND CODES EXPLAINED IN INTERPRETER

5. RECTIFIERS

IN ORDER OF (1) PIV, (2) MAX AVG FWD CURRENT (3) TEMPERATURE, and (4) TYPE No.

LINE No	4 TYPE No.	1 PIV (V)	MAX AVG FWD DC CURRENT 2 Io (A)	3 at TEMP (°C)	MAX RATINGS @ 25°C SURGE CUR PEAK 1 Cy (A)	PULSE WIDTH (s)	DISS (W)	MAX. TEMP (°C)	MAXIMUM FORWARD VOLTAGE DROP Vf (V)	at If (A)	at TEMP (°C)	MAX. REVERSE CURRENT Ir @25°C & Vr (A)	Ir at T & Vr (A)	TEMP T (°C)	TEST VOLT Vr (V)	AVALANCHE RATINGS MAX V BKDN. (V)	MIN SLOPE (A/V)	MAT.	DESCRIPTION DWG No.
1	S3A1	100	3 0	50A	300			150C	1 0	3 0	25A	1 0u			100			Si	A1ez
2#	S8-01	100	3 0	50	200	10m		150	1 1	8 0	25	50u			100			Si	S19m
3	1N5198	100	3 0	55A	300 §	8 3m		175A	1 0	3 0	55A		7 7m△	175A	100			Si	A1rv
4	JAN1N5198	100	3 0	55A	300			175A	1 0	3 0	25	5 0u	12m	100	100			Si	A1et
5	3S1E	100	3 0	55$	250			150A	95 △	3 0	100A	10u	100u	100	100			Si	A1rv
6	SLA5198	100	3 0	55	300			175	1 0	3 0	25	5 0u	12m	100	100			SL	A31a
7	1N4720	100	3 0	75A	300			175A	1 0	3 0	75		2 0m	175	100			Si	A179a☑
8	HC100	100	3 0	75	300		3 0	175	1 0	1 0	25		1 0m	25	100			Si	A179
9	MR2070	100	3 0	75	300	8 3m		175J	50 ∅	3 0	75	1 0m	3 0m	75	100			Si△	A179a
10	MR2370	100	3 0	75	300	8 3m		175J	1 0	3 0	25	1 0m	3 0m	75	100			Si△	M173
11	S51△	100	3 0	80$	20				1 3	5 0	25	100u			100			Si	S48
12#	S1BR2	100 %	3 0	95B	53			130B	55 ∅	1 5	25		2 0m	125	100			Si	S81
13	3E1	100	3 0	100	200	8 0m	3 0	175	1 2	3 0	100	10u	100u	50	110			Si△	A1ec
14#	FD13	100	3 0	100C	70	10m		150C	1 4	10	25C		300u	125C	100			Si△	D013
15	HR100	100	3 0	100	300 §	8 0u		150A	1 0	3 0 †	25	5 0u△	250u	100	100			Si	A1sm
16	1N5401	100	3 0	105C	200 §			170C	1 2	3 0	105C		50m	150C	100			Si	A3q
17	SEN310	100	3 0	105C	200	8 3m		170A	1 2	3 0	25	5 0u	500u	150	100			Si△	D027
18#	1S410	100	3.0	125S	33			150S	1 6	10	25S	5 0u	300u	150	100			Si	S61△
19#	1S431	100	3 0	125B				150	1 6		25	5 0u			100			Si△	A89
20	30S1	100	3 0	125	150 §			175J	1 0 †	3 0	25	5 0u	300u	125	100			Si	A1ed
21#	D1003	100	3 0	125B$	35			125B	1 5	3 0	25		.30m	25B	100			Si△	S4c
22	S410☑	100	3 0	125A				150A	1 6	10	25A	5 0u	300u	150	100			Si△	S24c☑
23#	3F10	100	3 0	140B	40	10m		175A	1 0	1 0	25A	50u	50m	150A	100			Si	D04
24	1N1582	100	3 0	150C				175B	1 5	6 0	25C		50m☑	150	100			Si	D04
25	E2B3	100	3 0	150	200			175	1 3	3 0	150	10u	1 0m	150	100			Si	D04
26#	S1M3	100 %	3 0	150J	180			150J	1 2	3.0			500u		100			Si△	A52d
27	1N1575	100	3 5	25C$	70			150C	1 2	3 5	25A	5 0u	50m	125A	100			Si△	S175
28	350R1B	100	3 5	25	250			175	2 0	3 5	25	10u	1 0m	150	100			Si	
29	1N3569	100	3 5	85B	35			165A	50 ∅	2 5	150A		40m	150A	100			Si	D04
30	1N2669	100	3 6	25A	15	8 3m		165A	1.3	3 6	25A	300u			100			Si	M126a
31	1N2740	100	3 6	25A	15	8 3m		165A	1 3	3 6	25A	300u			100			Si	M126c
32	400R1B	100	4 0	25	250			175	2 0	4 0	25	10u	1 0m	150	100			Si	
33#	G1004	100	4 0	25A	100	10m	4 5	150A	1 2	4 †	25		3 0m	125C	100			Si△	D04
34#	P1004	100	4 0	25A	100	10m	4 5	150A	1 2	4 †	25		3 0m	125C	100			Si△	S95a
35#	SJ104F	100 †	4 0	25A	15			200A	1 0	75	25A	10u	1 5m	200A	100			Si△	D03
36	1N2512	100	4 0	30C	30			165	1 1	1 5	25	2 0u			100			Si△	D04△
37	1N2518	100	4 0	30C	25			150C				2 0u	25m	150C	100			Si△	S117
38	4F1	100	4 0	75	300	8 0m	3 0	175B	1 3	4 0	25	100u	500u	100	110			Si△	F22
39	450R1B	100	4 5	25	250			175	2 0	4 5	25	10u	1 0m	150	100			Si	
40	MR10	100	4 5	150B	70			185B	1 0 △	4 5	150B	20u△						Si△	D04
41	1N1613	100	5 0					175A	1 5	10	25A							Si	D04
42	1N2290	100	5 0	25	100			150	60	5 0	25		50m	150	100			Si△	S35
43	500R1B	100	5 0	25	250			175	2 0	5 0	25	10u	1 0m	150	100			Si	
44	5BR1†	100	5 00	30	35	8 0m		125C											M530
45▼#	5PM1†	100	5 0	50	125			150J	2 0	5 0			50u	150	100			Si	M585
46	S5A1	100	5 0	50A	300			150C	1 1	5 0	25A	1 0u			100			Si	A1ez
47#	S20-01	100	5 0	50	600	10m		150	1 1	60	25	50u		25	100			Si	S19p
48	1N1059	100	5 0	100A	60 §	4 0m		170C	1 5	5 0	25A	1 0m			100			Si	S67a
49	1N1065	100	5 0	100A	60 §	4 0m		170C	1 5	5 0	25A	1 0m			100			Si	S66c
50	1N1071	100	5 0	100A	60 §	4 0m		170C	1 5	5 0	25A	1 0m			100			Si	S68c
51	1N1089	100	5 0	100A	60 §	4 0m		170C	1 5	5 0	25A	2 0m			100			Si	F22h
52	1N1089A	100	5 0	100A					1 5	5 0	100A		5 0m	100A	100			Si	F73
53	10F5	100	5 0	100				175J	1 1	13	25C		10m	25A	100			Si	S41a
54#	SJ103E,K	100 †	5 0	100C	30		3 0	150A	1 0	75	25C	10u	30m	150C	100			Si△	D04☑
55	VRE100X	100	5 0	100	75	8 3m		150	1 5	10	25	2 0	5.0	150	100			Si△	M249*
56	VRF100X	100	5 0	100	75	8 3m		150	1 5	10	25	2 0	5 0	150	100			Si△	M249*
57	VRG100X	100	5 0	100	75	8 3m		150	1 5	10	25	2 0	5 0	150	100			Si△	M249*
58	366B	100 †	5 0	145C	100			180J	1 1	5 0	25C		10m	180	100			Si	S27
59	1N1613A	100	5 0	150C	150			190J	1 1	6 0	25		50m	150	100			Si△	D04△
60	407B	100	5.0	150C	125	8 3m		175J	1 1	5 0	25C		2.0m☑	175J	100			Si	D04
61	E3B3	100	5 0	150	200			175	1 3	5 0	150	10u	1 0m	150	100			Si	D04
62	F1B3	100	5 0	150C	200			175J	1 3	30	25C		1 0m	150C	100			Si	D05
63	550R1B	100	5 5	25	250			175	2 0	5 5	25	10u	1 0m	150	100			Si	
64	NS6001	100	6 0		300	8 3m			1 2	6 0		25u			100				
65	6A100	100	6 0	25	300	8 0m		175	1 2	6 0	25	25u						Si	S19f
66	600R1B	100	6 0	25	250			175	2 0	6.0	25	10u	1 0m	150	100			Si	
67	BR91A†	100	6 0	25	150	8 0m		150	1 2	3 0	25	10u			110			Si△	M537
68#	G1006	100	6 0	25A	140	10m	8 0	150A	1 2	6 †	25		3 0m	125C	100			Si△	D04
69#	P1006	100	6 0	25A	140	10m	8 0	150A	1 2	6 †	25		3 0m	125C	100			Si△	S95a
70	VH148†	100 †	6 0	80	25	8 3m		150	1 2	6 0	25	10	10	150A	100			Si△	M532a
71#	6F10	100	6 0	100A	120 §	10m		190J	65	6 0	100B		2 5m	100B	100			Si△	D04☑
72#	S1AN6	100 %	6 0	125B	125		6 5	150J	470m∅	6 0 †			2 0m	125B				Si△	D04☑
73#	S6-103K	100	6 0	125C	130	10m		150J	1 5	32	25A	20u	500u	150C	100			Si△	D04☑
74	1N1342	100	6 0	150C	66		9 5	190J	1 2	10	25J		10m	25	100			Si	S26
75	1N1342A	100 †	6 0	150B$	150			200J	64 ∅	6 0	150B		2 5m∅	150B	100			Si*	D04
76	1N1342B	100	6 0	150C	150			190J	1 1	6 0			02m	25C	100			Si△	D04△
77	1N2148	100	6 0	150C$	150			150	1 2	10	25	4 0u	50m	150A	100			Si	D010
78	1N2148A	100	6 0	150C$	150			150	1 0	10	25	1 0u	10m	150	100			Si	D010
79	1N2492	100	6 0	150C				190J	1 1	6 0	25		2 0m☑	150C	100			Si	D04
80	1N2566	100	6 0	150C$	150			150C	1 5	10	25C	10u	1 0m	150C	100			Si△	D010
81	BY402	100	6 0	150C$	150			150C	1.2	6 0	25C	4 0u	50m	150C	100			Si	S35
82	BY412	100	6 0	150C$	150			150C	1 0	6 0	25C	1 0u	10m	150C	100			Si	S35
83	BY422	100	6 0	150C$	150			150C	1 5	6 0	25C	10u	1 0m	150C	100			Si	S35
84	BY702	100	6 0	150C$	150			150C	1 2	6 0	25C	4 0u	50m	150C	100			Si△	D04
85	BY712	100	6 0	150C$	150			150C	1 0	6 0	25C	1 0u	10m	150C	100			Si△	D04
86	BY722	100	6 0	150C$	150			150C	1 5	6 0	25C	10u	1 0m	150C	100			Si△	D04
87	E4B3	100	6 0	150	200			175	1 3	6 0	150	10u	1 0m	150	100			Si	D04
88	KR602BA	100	6.0	150S$	75			175S	1 2	6 0	150S		1 0m	150S	100			Si	D010
89	1N1613R	100	7 0	150B	150			190A	700m	1 0	190J							Si	D04
90	1N2692	100	7 2	25A	15	8 3m		165A	1 3	7 2	25A	300u			100			Si	M126e
91	UT5110	100	7 5	100C	150	8 3m		175A	1 0	5 0 ☑	25	10u	300u	100	100			Si	S277☑
92	MS10☑	100	7 5	150B	140			185B	1 0 △	7 5	150B	20u△						Si△	D04
93	ii10R3	100	8 0	25	500	1 0u		150	950m	8 0	25	75u		25	50			Si	S318a
94#	ZR21	100	8 0	25A	80	10m		150A	1 2	5 0	25A	5 0u	20m	100A	100			Si	S235
95#	ZR201	100	8 0	25A$	160	1 0m		150	1 2	5 0	25A	5 0u	20m	100A	100			Si△	S61△
96▼#	8PT1$	100	8 0	40A	250	10m		150J	2 0	8 0			32m	150	100			Si	M588
97#	S5B10	100	8 0	40A	430	10m		150J	1 05 △	20	25A		8 0m	25A	100			Si△	S50
98#	S8-01F	100	8 0	50	200	10m		150	1 1	8 0	25	50u			100			Si	M389
99	PA10†	100	8 0	55	300	8 3m		150	1 0	2 0	25	10u	100u	100	100			Si	M542
100#	SX751	100	8 0	125A	100	10m		160J	1 2	8 0	25J		1 0m	100J	100				S31a
101	E5B3	100	8 0	150	200			175	1 3	8 0	150	10u	1 0m	150	100			Si	D04
102	1N2794	100	8 5	25A	75			175A	1 25	15	150C		5.0m	150C	100			Si	D05
103	UT6110	100	9 0	100C	175	8 3m		175A	1 0	6 0 ☑	25	10u	30m	100	100			Si	S277☑
104	1N2248	100	10	25C$	200			150	60	10	25		1 0m	150	100			Si△	D04
105	1N2248A	100	10	25C$	200			150	60	10	25		50m	150	100			Si△	D04
106	1N2249	100	10	25$	200			150	60	10	25		1 0m	150	100			Si△	S35
107	1N2249A	100	10	25C$	200			150	60	10	25		50m	150	100			Si△	S35
108	BR101A†	100	10	25	200	8 0m		150	1 2	5 0	25	10u			110			Si△	M538
109#	DD4521	100	10	25	120	2 0m	10	150	1 0	10	25	10u		25	100			Si	S19
110#	G1010	100	10	25A	230	10m	17	150A	1 1	10 †	25		3 0m	125C	100			Si△	D04

SYMBOLS AND CODES EXPLAINED IN INTERPRETER

5. RECTIFIERS

IN ORDER OF (1) PIV, (2) MAX AVG FWD CURRENT (3) TEMPERATURE, and (4) TYPE No.

LINE No	4 TYPE No	1 PIV (V)	MAX AVG FWD DC CURRENT 2 Io (A)	3 at TEMP (°C)	MAX RATINGS @ 25°C SURGE CUR. PEAK 1 Cy (A)	PULSE WIDTH (s)	DISS (W)	MAX. TEMP (°C)	MAXIMUM FORWARD VOLTAGE DROP Vf (V)	at If (A)	at TEMP (°C)	MAX. REVERSE CURRENT Ir @25°C & Vr (A)	Ir at T & Vr (A)	TEMP T (°C)	TEST VOLT Vr (V)	AVALANCHE RATINGS MAX V BKDN (V)	MIN SLOPE (A/V)	MAT	DESCRIPTION DWG No.
1#	MA231	100	10	25$	50			150					4 5m	125	125			Si△	S74
2#	P1010	100	10	25A	230	10m	17	150A	1 1	10 †	25		3 0m	125C	100			Si△	S95a
3#	SJ104E,K	100 †	10	25C	15		4 3	200C	1 0	.75	25C	10u	1 5m	200C	100			Si△	DO4⊠
4▼#	10PM1†	100	10	40A	250	10m		150J	2 0	10			32m	150	100			Si	M586
5	1N1621	100	10	100A$	150	4 0m		100A	1 2	10	25		5 0m	25	100			Si	S43
6#	1S420	100	10	100B	200			175S	1.5	30	25A		50u	100	100			Si	S61△
7	S420	100	10	100A	200	10m		175A	1 5	30	25A		50u	100	100			Si△	S24c⊠
8	VR100X†	100 †	10	100	75	8 3m		150	1 5	10	25	2 0	5 0	150	100			Si△	M249
9	VRA100X	100	10	100	75	8.3m		150	1 5	10	25	2.0	5 0	150	100			Si△	M249*
10	VRB100X	100	10	100	75	8 3m		150	1 5	10	25	2 0	5 0	150	100			Si△	M249*
11	VRC100X	100	10	100	75	8 3m		150	1 5	10	25	2 0	5 0	150	100			Si△	M249*
12	VRD100X	100	10	100	75	8 3m		150	1 5	10	25	2 0	5 0	150	100			Si△	M249*
13#	1S161	100	10	120B	200			175	1 6	50	25J		6 0m	175J	100			Si△	S103
14#	SA1AN12	100	10	120B	210			150J	470mØ	10			2.0m		100			Si△	DO4⊠
15#	D1010	100	10	125B$	130			125B			25		.30m	125B	100			Si△	S4c
16#	S1AN12	100 %	10	125B	210			150J	500mØ	9 5	25B		2 0m	125B				Si△	DO4⊠
17	367B	100 †	10	130C	150			180J	1 2	10	25C		10m	180C	100			Si	S27
18	408B	100	10	145C	175	8 3m		175J	1.2	10	25C		2 0m⊠	175J	100			Si	DO4
19	1N249	100	10	150$				175S	1 5	25	25		5 0m⊠	150C	100			Si	DO5
20	40109	100	10	150C	140 §			175C	60	10	150C	75u△	2.0mØ	150C	100			Si△	DO4
21	E6B3	100	10	150	200			175	1.3	10	150	10u	1 0m	150	100			Si	DO4
22	F2B3	100	10	150C	200			175J	1 3	30	25C		1 0m	150C	100			Si	DO5
23#	2WMT1	100	11	100C	220 §	10m		125J	1 5	40	100C		7 0m	125J	100			Si*	
24▼	HEPR0131-RT	100	12	25$	300			190†										Si	DO4
25	SL100	100	12	50A	300			175C	1 4	12	25A		2 0m	150A	100			Si	DO4⊠
26#	2AF1	100	12	60A	140 §	10m	1 8	190J	95	12			2.0m	150J	100			Si	M324b#⊠
27#	2AF1LV	100 #	12	60A	140 §	10m	1 8	190J	95	12			2 0m	150J	100			Si	M324d#⊠
28	10J3P	100	12	100A	150	4 0m		100A	1 3			5 0m			100			Si	S23
29#	12F10	100	12	100A	150 §	10m		190J	65	12	100B		2 5m	100B	100			Si△	DO4⊠
30	UT8110	100	12	100C	200	8 3m		175A	1 0	8 ⊠	25	10u	30m	100	100			Si	S277⊠
31#	SR10L2S	100	12	120C	200			150J	1 2 †	40	25C		1 5mØ	150J	100			Si	S249a
32#	2AF1LH	100 #	12	140A	140 §	10m	1 8	190J	95	12			2 0m	150J	100			Si	M324c#⊠
33#	2AF1PLH	100 Ø	12	140B	160 §	10m		190B	550mØ	12 †	25A		1.5m	150B	100			Si	M324c⊠
34#	2AF1PLV	100 Ø	12	140B	160 §	10m		190B	550mØ	12 †	25A		1 5m	150B	100			Si	M324d⊠
35#	2AF1PPF	100 Ø	12	140B	160 §	10m		190B	550mØ	12 †	25A		1 5m	150B	100			Si	M324f⊠
36#	2AF1PPP	100 Ø	12	140B	160 §	10m		190B	550mØ	12 †	25A		1 5m	150B	100			Si	M324e⊠
37	1N1200	100 *	12	150C	100		18	190J	1 4	20	25J	10u			100			Si	S27
38	1N1200A	100	12	150B$	240			150B	1 3	12	25A		3 0m	150A	100			Si△	DO4△⊠
39	1N1200B	100	12	150C$	250			150B	1 1	12	25A		1 0m	150A	100			Si△	DO4△
40	1N2577	100	12	150C$	250			150C	1 2	20	25C	8 0u	1 0m	150C	100			Si△	DO10
41	1N2588	100 ⊠	12	150C	250			150C	1 0	12		2 0u	20m	150C	100			Si△	DO10
42	1N2599	100	12	150C$	250			150C	1 5	20	25C	20u	2.0m	150C	100			Si△	DO10
43	BY502	100	12	150C$	250			150C	1 2	12	25C	8 0u	1 0m	150C	100			Si	S35
44	BY512	100	12	150C$	250			150C	1 0	12	25C	2 0u	20m	150C	100			Si	S35
45	BY522	100	12	150C$	250			150C	1 5	12	25C	20u	2 0m	150C	100			Si	S35
46	BY802	100	12	150C$	250			150C	1 2	12	25C	8 0u	1 0m	150C	100			Si△	DO4
47	BY812	100	12	150C$	250			150C	1 0	12	25C	2 0u	20m	150C	100			Si△	DO4
48	BY822	100	12	150C$	250			150C	1 5	12	25C	20u	2.0m	150C	100			Si	DO4
49	E7B3	100	12	150	200			175	1 3	12	150	10u	1.0m	150	100			Si	DO4
50	MR1121	100	12	150C	300 §			190J	1.0	12	25C	500u			100			Si△	DO4
51	TR1121	100	12	150C	300 §			190J	1 2	12	25C	50u	40mØ	150C	100			Si	DO4
52	UR123BA	100	12	150S$	240			175S	1 2	12	25		3 0m	150S	100			Si	DO10
53#	SU112	100	12	175C$	150			175S	1 2	12	25		5 0m	150C	100			Si△	M80
54	MT10	100	14	150B	240			185B	1 0 △	14	150B	100u△						Si△	DO4
55▼	HEPR0161-RT	100	15	25$	250			175†										Si	DO5
56▼#	15PT1$	100	15	40A	250	10m		150J	2 0	15			32m	150	100			Si	M589
57#	M9216	100	15	50A					1 2	22			1.5m		100				⊠
58#	SC115	100	15	50A	150			160J	1 1	15	25A	100u	50m	100A	100			Si△	DO4
59	SCDA1	100	15	55A	300			150A	1 0	3 0	25A	10u	100u	100A	100			Si	M497
60	SCNA1	100	15	55A	300			150A	1 0	3 0	25A	10u	100u	100A	100			Si	M497
61	SCPA1	100	15	55A	300			150A	1 0	3 0	25A	10u	100u	100A	100			Si	M497
62	15GS1	100	15	75C	150	8 3m		150J	1 5	32	25A	20u	500u	150C	100			Si△	DO4⊠
63#	5M10	100	15	79B	300	10m		130A	1 3 †	50	130J		5.0m		100			Si	S193a
64	1N1077	100	15	100A	150 §	4 0m		170C	1 5	15	25A	20m			100			Si	S68d
65	10Q3	100	15	100A$	150			150	1 5	15			20m	25	100			Si	S68
66#	RN1015	100	15	100C	350	10m	25	125C	1 2	15 †	25		3 0m	125C	100			Si△	DO5
67#	SR10N2S	100	15	115C	200			150J	1 2 †§	40	25C		1 5m	150J	100				C112
68#	1S1640	100	15	120C	200			150J	1 2	22	25A	1 5m			100			Si	M383⊠
69#	S1AN15	100	15	120B	220			150J	490mØ	15			3.0m		100			Si△	S324⊠
70#	S1BN15	100	15	120B	220			150J	490mØ	15			3 0m		100			Si△	S320⊠
71	368B	100	15	125C	240	8 3m		180J	1 3	15	25C		2 0m⊠	130C	100			Si	DO4
72	409B	100	15	125C	250	8 3m		175J	1 3	15	25C		2.0m⊠	175J	100			Si	DO4
73#	SR10J2S	100	15	140C	200	8 3m		175	1 2	40	25C		3 0m	175J	100	300	200u	Si△	M337
74	1N3209	100	15	150C	250	8 3m		175C	1 5	40	25C	1 0m	10m	150C	100			Si	S4n
75	703B	100	15	150	250	8 3m	15	175J	1 2	40	25	2 0m	5.0m	175J	100			Si△	M78
76	F3B3	100	15	150C	200			175J	1 3	30	25C		1 0m	150C	100			Si	DO5
77#	16F10	100	16	100B	350	10m	17	190	55	16	100		3 0m	175	100			Si	DO4
78	1N3616	100	16	155B$	300			175B					2 5m	175B	100			Si△	DO4
79	2010	100	16 5	25A	200		4 0 Ø	50A	60 Ø	19	25A		1 0mØ	150C	100	280		Si△	DO4#△
80	2015	100	16 5	25A	200		4 0 Ø	50A	60 Ø	19	25A		1 0mØ	150C	150	350		Si△	DO4#△
81#	SK103K	100	17 5	85C	230	10m		150J	1 4	50	25A	20u	500u	150C	100			Si△	DO4⊠
82	S5978B,9B	100	18					150C	1 2										A1ss#
83#	S1BR8	100 %	18	120B	188		18	140B	60 Ø	18	25		10m	125	100			Si	S122a
84	40209	100	18	150C	250 §			175A	650mØ	18	150C	100u	3 0mØ	150C	100			Si△	DO5⊠
85	V100#	100	18	150	300			175	1 7	18	25		2 0m	25	100			Si	DO21
86	1N2273	100	20	25$	400			150	60	20	25		1 0m	150	100			Si△	DO4
87	1N10R4	100	20	25	800	1 0u		150	950m	20	25	100u		25	50			Si	S318b
88#	MA251	100	20	25$	100			150					6 0m	125	125			Si△	S72a
89▼#	20PM1†	100	20	40A	250	10m		150J	2 0	20			32m	150	100			Si	M587
90#	S8B10	100	20	40A	100	10m		150J	1 05 △	40	25A		20m	25A	100			Si△	S51
91	1S1288	100	20	50A					1 2	35			1 5m		100				⊠
92	M9220	100	20	50A					1 2	35			1 5m		100				⊠
93#	S20-01F	100	20	50	600	10m		150	1 1	60	25	10u		25	100			Si	S19p
94#	21PT10	100 *	20	100B	360 §	8.3m		170J	1 2 †	20	25		1 6m	140B	100			Si	M471
95	TR100△	100	20	100C$				175A	2 0				10mØ	100C	100			Si	DO5
96	A40A	100	20	110B	300			175B	1 2	20	25J	1 0m			100			Si	S88
97	A41A	100	20	110C	300			175J	1 2	20	25J	1 0m			100			Si	S88
98	A44A	100	20	110C	300			175J	1 2	20	25J	1 0m	9 0mØ	150J	100			Si	M76⊠
99#	1S171	100	20	120B	400			175	1 6	100	25J		14m	175J	100			Si△	S102
100#	1S1641	100	20	120C	300			150J	1 2	35	25A	1 5m			100			Si	M383⊠
101#	S1AN20	100	20	120B	250			150J	480mØ	20			3 0m		100			Si△	S324⊠
102#	S1BN20	100	20	120B	250			150J	480mØ	20			3.0m		100			Si△	S320⊠
103	417B	100	20	150C	350	8 3m		175J	1 05	20	25C		2 0m⊠	150C	100			Si	DO5
104	F4B3	100	20	150C	600			175J	1.3	50	25C		2 0m	150C	100			Si	DO5
105	TM19	100	21	75C				190S	1 2	12	25		2 0m⊠	150	100			Si	S145
106#	3WM1	100 #	21	115B	100	1		150B	1 7	35	25		10m	150B	100			Si	S144
107	MR751	100 †	22	60	400			175J	900m	6.0	25A	250u	1 0m	150J	100			Si△	A264
108	2110	100	22	120C	200			175J	60 Ø	22	25A		1.0mØ	150C	100	280		Si△	DO4△
109	S2110	100	22	120C	200		1 Ø⊠	175J	60 Ø	22	25A		1 0mØ	150C	100	280		Si△	DO4△
110	1N1192A	100	22	150B$	100	1		200J	1.2	60	25C		5 0m	175C	100			Si	DO5

SYMBOLS AND CODES EXPLAINED IN INTERPRETER

5. RECTIFIERS

IN ORDER OF (1) PIV, (2) MAX AVG FWD CURRENT (3) TEMPERATURE, and (4) TYPE No.

LINE No.	4 TYPE No.	1 PIV (V)	MAX AVG FWD DC CURRENT 2 Io (A)	3 at TEMP (°C)	MAX RATINGS @ 25°C SURGE CUR PEAK 1 Cy (A)	PULSE WIDTH (s)	DISS. (W)	MAX TEMP (°C)	MAXIMUM FORWARD VOLTAGE DROP Vf (V)	at If (A)	at TEMP (°C)	MAX. REVERSE CURRENT Ir @25°C & Vr (A)	Ir at T & Vr (A)	TEMP T (°C)	TEST VOLT Vr (V)	AVALANCHE RATINGS MAX V BKDN. (V)	MIN SLOPE (A/V)	MAT.	DESCRIPTION DWG. No
1	1N1454	100	25					190J	1.5	25	25J	25m						Si	M56d
2#	25B10T†	100	25		700	20m		150A				20m			100				M563
3	1N3492	100 †	25	25C	300	8 3m		175C	1.7	18	150C	1 0u	10m	150C	100			Si	DO21
4	PB10†	100	25	55	300	8.3m		150	1.0	3.0	25	10u	100u	100	100			Si	M542
5	PBU10†	100	25	55	300	8 3m		150	1.0	3 0	25	10u	100u	100	100			Si	M542a
6▼	S25A10	100	25	55	300	8.3		150	1.0	3 0	25	10u	100u	100	50			Si	M542
7#	4AF1	100	25	60A	350 §	10m	80	190J	95	25			3 0m	150J	100			Si	M324b#☑
8#	4AF1LV	100 #	25	60A	350 §	10m	80	190J	95	25			3 0m	150J	100			Si	M324d#☑
9	25P10	100	25	100C	300			175J	7 0 ∅	25 †	25C		7 0m☑	150C	100			Si△	M38ab☑
10#	BYX21/100	100	25	100	300	10m		175J	1 45	60	25		6 0m	125	40			Si	M324☑
11	VY100X†	100 †	25	100	150	8 3m		150	1 8	25	25	2 0	5.0	150	100			Si△	M560
12#	BYX21L200	100	25	120C	250	10		175J	1 6 †	80	25J		3 0m	125J	90			Si	M80a
13#	SR20F2S	100	25	120C	400			150J	1 2 †	80	25C		1 5m∅	150J	100			Si	M337a
14#	SR25A2S	100	25	120C	600			150J	1 2 †§	80	25C		3.0m	150J	100				S249b
15#	DD7121	100	25	139B	400	10m	30	175S	1.3	25	25B	10u	500u	150C	100			Si△	S52d☑
16#	4AF1LH	100 #	25	140A	350 §	10m	80	190J	95	25			3 0m	150J	100			Si	M324c#☑
17#	4AF1PLH	100 ∅	25	140B	400 §	10m		190	55 ∅	25 †	25A		2 0m	150B	100			Si	M324c
18#	4AF1PLV	100 ∅	25	140B	400 §	10m		190	55 ∅	25 †	25A		2 0m	150B	100			Si	M324d
19#	4AF1PPF	100 ∅	25	140B	400 §	10m		190	550m∅	25 †	25A		2 0m	150B	100			Si	M324f☑
20#	4AF1PPP	100 ∅	25	140B	400 §	10m		190	550m∅	25 †	25A		2 0m	150B	100			Si	M324e☑
21	1N1192	100 *	25	145C	125		30	190J	1 4	30	25J	10u			100			Si	S29
22	1N2155	100 ∅	25	145B	400			200J	60 ∅	25	145B		4 5m∅	145B	100			Si*	DO5☑
23	418B	100	25	145C	400	8 3m		175J	1 1	25	25C		2 0m☑	145C	100			Si	DO5
24	F5B3	100	25	150C	600			175J	1 3	90	25C		2 0m	150C	100			Si	DO5
25	PBT10$	100	27 5	55	300	8 3m		150	1 0	3 0	25	10u	100u	100	100			Si	M543
26#	ZR31C	100	30	20A$	400	10m		140A	1.2	30	25	500u	2 0m	100	100			Si△	S38
27	1N1435	100	30	25B	160	1	38	175A	1.2	60	25		5 0m	150B	100				S143
28	3110	100	30	25A	200		4 0 ∅	50A	60 ∅	34	25A		1 0m∅	150C	100	280		Si△	DO5#△
29	ıı10R5	100	30	25	1 0k	1 0u		150	950m	30	25	200u		25	50			Si	S318c
30▼#	30PT1$	100	30	40A	250	10m		150J	2.0	30			32m	150	100			Si	M590
31	PBC10	100	30	55C	300			150C	1.0	3 0	25C	10u	100u	100C	100			Si	M447☑
32	1N3660	100 †	30	100C	400 §			175C	70 ∅	25	25		4 5m☑	150	100			Si	DO21
33▼#	3C1	100	30	110C	500	10m		150S	1 5	30	40A	3 0m			100			Si*	S181
34#	S1AN31	100	30	120B	347			150J	600m∅	30			4 0m		100			Si△	S325☑
35#	S1BN31	100	30	120B	347			150J	600m∅	30			4 0m		100			Si△	S321☑
36	G3B3	100	30	150C	1 5k			175J	1 3	200	25C		5 0m	150C	100			Si	DO8
37	1N1458	100	35					190J	1.5	35	25J	25m						Si	M56d
38#	DD 711	100 *	35 ∅	25A				100A	92	35	25A		1 0m	150A	100			Si	S125c
39▼	HEPR0251-RT	100	35	25$	400			190†										Si	DO5
40#	RN1120	100	35	25C	250	10m	32	175C†	1 5	20	25		5 0m	150C	100			Si△	DO5
41	1N1184	100	35	140C	500	8 3		140C	1 7	35	140C							Si	S29a
42#	31R2	100	35	140C	500 §	10m		200J	1 3	35	25C		10m	150C	100			Si△	DO5☑
43	371B	100 †	35	140C	500	8 3m		190J	1.2	35	25C		20m	190J	100			Si	DO5
44#	DA711	100 *	35 ∅	140B				150A	92	35	25A		1 0m	150A	100			Si△	S4m☑
45	127350A	100	35	150	500	8 3m		200J	1.3	35	25C		5 0m☑	150C	100			Si	DO21
46#	SUT101K	100	36	85C	600	10m		150J	1 6	90	25A	200u	3 0m	150C	100			Si△	DO5☑
47	1N249A	100	37	40A	600			175J	1 5	50	25		2 0m	150C	100			Si	DO5
48	1N249B	100	37	120C$	350			175J	1.5	50	25		2 0m	150C	100			Si	DO5
49	1N1302	100	37	120C$	600			175C	1.5	50	25		2 0m	150C	100			Si	DO5
50#	40B10T†	100	40		1 1k	20m						20u			100				M563
51#	K1040△	100	40	90C	800	10m	44	125C	1.2	40 †	25		4 0m	125C	100			Si△	S245
52#	6WM1	100	40	100C	650 §	10m		125J	1.4	110	100C		14m	125J	100			Si*	S8
53#	10M10	100	40	104B	800	10m		130A	1 2 †	120	130J		10m		100			Si	S4s
54▼#	4C1	100	40	110C	700	10m		150S	1 5	40	40A	3 0m	12m	150	100			Si*	S181
55	419B	100	40	120C	500	8 3m		175J	1 2	40	25C		2 0m☑	120C	100			Si	DO5
56#	S1AN40	100	40	120B	485			150J	500m∅	40			4 0m		100			Si△	S325☑
57#	S1BN40	100	40	120B	485			150J	500m∅	40			4 0m		100			Si△	S321☑
58	40HF10	100 †	40	140C	500 §	8 3m		180J	1 3	40 †	140C		7 0m☑	140C	100			Si△	S21e☑
59	1N1184A	100	40	150B$	200	1		200J	1 1	100	25C		5 0m	175C	100			Si	DO5
60	G4B3	100	40	150C	1 5k			175J	1 3	200	25C		5 0m	150C	100			Si	DO8
61	127351A	100	44	150	700	8 3m		200J	1 3	44	25C		5 0m☑	150C	100			Si	DO21
62	TR323	100	45	50C	300			175C	1 5	50	25C	1 0m△	10m☑	150	100			Si	M78
63	1N2447	100	45	60C	300			175B	1 1	20	25		5 0m∅	150B	100			Si△	DO5
64	1N1462	100	50					190J	1 5	50	25J	50m						Si	M56c
65	SLEA1†	100	50		150	16m			1 0	3 0	25	5 0u	100u	100	100			Si	M546
66#	MA261	100	50	25$	250			150					11m	125	100			Si△	S72
67▼#	SD1Y	100	50	60A	45	10m		100S	1 0	1 5	25A	10u			100			Si	A221b
68	1N412B	100	50	100C	525 §			175C	1 5	50	175C		25m	175C	100			Si	DO8
69#	SL103A,K	100 †	50	100C	150		10	150C	1 2	10	25C	50u	1 5m	150C	100			Si△	DO4☑
70	S3410	100	50	120C	600		2 ∅☑	175J	60 ∅	50	25A		2 0m∅	150C	100	280		Si△	DO5△
71	50C10	100	50	140	400	1	55	190J	1.1	50	25		20m	150	50			Si	DO5△☑
72	1N2173	100	50	150C	525			175C	1.5	50	150C		25m	150C				Si	DO8
73	MR1201	100	50	150C	800	8 3m		190J	40 ∅	50	150C		10m	150C	100			Si	M226☑
74#	S1AN55	100	55	125B	935			150J	500m∅	55			6 0m		100			Si△	☑
75#	S1BN55	100	55	125B	935			150J	500m∅	55			6 0m		100			Si△	S322☑
76#	S1GN55	100	55	125B	935			150J	500m∅	55			6 0m		100			Si△	S322☑
77	1N2459	100	60	60C	450			175B	1 1	30	25		5 0m∅	150B	100			Si△	DO5
78#	SB101K	100	60	85C	700	10m		150J	1 7	210	25A	200u	3 0m	150C	100			Si△	S168a☑
79#	SBT101K	100	60	85C	700	10m		150J	1 7	210	25A	200u	3 0m	150C	100			Si△	S168a☑
80	1N2129	100	60	100C	700 §			175C	1 4	60	115C		30m△	175C	80			Si	DO5
81	1N2129A	100	60	100C	900 §			200C	1 3	60	140C		30m△	200C	80			Si	DO5
82#	KS1060	100	60	110C	1 5k	10m	67	150C	1 2	60 †	25		5 0m	125C	100			Si△	S245
83#	25G10	100	60	112B	850 §	10m	60	190B	55 ∅	25	25A							Si*	DO5☑
84#	20M10	100	60	126B	1 0k	10m		175A	1 5 †	180	175J		10m		100			Si	S4t
85	H5B3	100	60	150C	3 0k			175J	1 3	300	25C		10m	150C	100			Si	DO9
86	TR103	100	65	75C				175C	1 5	100	25C		5 0m☑	150C	100			Si	DO5
87#	S1AN71	100	70	120B	1 2k			150J	470m∅	70			6 0m		100			Si△	☑
88#	S1BN71	100	70	120B	1 2k			150J	470m∅	70			6 0m		100			Si△	S323☑
89#	S1GN71	100	70	120B	1 2k			150J	470m∅	70			6 0m		100			Si△	S322☑
90	70H10	100	70	125C	1 2k§	8 3m		200J	1 3	70 †	125C		10m☑	125C	100			Si*	DO5☑
91	70H10A	100 †	70	125C	1 2k§	8 3m		200J	1 3	70	125C		10m☑	125C	100			Si△	DO5☑
92	1N1397	100 †	70	150C	1 2k			190J	1 25	70	150C		30m	150C	100			Si	S14b
93	1N3140	100	70	150C	1 2k			175S	90 △	70	190J		15m∅	150C	100			Si	S206
94	CH109A2	100	70	150C	1 5k	8 3m		200C	1 3 △	150	150C		15m∅	150C	100			Si*	S53△
95	J4B3	100	70	150C	4 0k			175J	1 2	300	25C		10m	150C	100			Si	DO9
96	J5B3	100	70	150C	4 0k			175J	1 2	300	25C		10m	150C	50			Si	DO9
97	10JH3	100	72		150	4 0m		100A	1 2									Si	S11f☑
98	1N1466	100	75					190J	1 5	75	25J	50m						Si	M56c
99#	10WM1	100	75	100C	1 0k§	10m		125J	1 5	200	100C		20m	125J	100			Si*	M43a
100▼	75E10	100	75	150C	850	4 0m		190J	1 0	90	25C		40m	25C	100			Si	S83a△☑
101	75F10	100	75	150C	850	4 0m		190J	1 0	90	25C		40m	25C	100			Si	M56a△☑
102#	S16B10	100	80	40A	5 4k	10m		120J	1 05 △	200	25A		80m	25A	100			Si△	M26#
103▼#	8C1	100	80	100C	1 2k	10m		150S	1 5	80		5 0m			100			Si*	S110a
104	1N1470	100	100					190J	1 5	100	25J	60m			100			Si	M56f
105	ST610	100	100	25A	1 6k			190J	1 2	100	25A		5 0m	25	100			Si	Z29
106▼#	101R1S	100	100	50C	1 6k			175J	1 6	500	25	27m		175J	100			Si	S357
107	1N2427	100	100	75C	950			175B	1 1	50	25		10m∅	150B	100			Si△	DO8
108▼#	10C1☑	100	100	100C	1 5k	10m		150S	1 4	100		5 0m			100			Si*	S110a
109#	1S431R	100	100	105B	1 6k			175J	1 6	500	25J		27m	175J	100			Si△	S12f
110	1N4878	100 $	100	120C	1 5k			150C	1 3	100	120C		5 0m	120C	100	400		Si	DO8

SYMBOLS AND CODES EXPLAINED IN INTERPRETER

5. RECTIFIERS

IN ORDER OF (1) PIV, (2) MAX AVG FWD CURRENT (3) TEMPERATURE, and (4) TYPE No.

LINE No	TYPE No.	PIV (V)	MAX AVG FWD DC CURRENT Io (A)	at TEMP (°C)	MAX RATINGS @ 25°C SURGE CUR. PEAK 1 Cy (A)	PULSE WIDTH (s)	DISS. (W)	MAX. TEMP (°C)	MAXIMUM FORWARD VOLTAGE DROP Vf (V)	at If (A)	at TEMP (°C)	MAX. REVERSE CURRENT Ir @25°C & Vr (A)	Ir at T & Vr (A)	TEMP T (°C)	TEST VOLT Vr (V)	AVALANCHE RATINGS MAX V BKDN (V)	MIN SLOPE (A/V)	MAT.	DESCRIPTION DWG. No.
1#	SR100K2S	100	100	120C	1 6k			120†	1 0 †	105	25C		6 0m	150J	100			Si	M228d
2	1N3288	100 †	100	130C	1 6k	8.3m		200C	1.2	100	130C		24m	130C	100			Si	DO8
3	1N3288A	100	100	130C	2 3k			200C	1.25	100	130C		24m	130C	100			Si	DO8
4	A70A	100	100	130B	1 6k	8.3m		200J	600mØ	100	130B		9.5m	130B	100			Si	DO8
5	A71A	100	100	130B	1 6k	8 3m		200J	600mØ	100	130B		9 5m	130B	100			Si	DO8
6	MR1211SB	100	100	135C	2 0k§	8 3m	160	190J	400mØ	80 †	150C		15m	150C	100			Si△	S199
7	MR1211SL	100	100	135C	2 0k§	8 3m	160	190J	400mØ	80 †	150C		15m	150C	100			Si△	S87a
8	MR1811SB	100	100	135C	2 0k§	8.3m	160	190J	400mØ	80 †	150C		15m	150C	100			Si△	S199m
9	MR1811SL	100	100	135C	2 0k§	8 3m	160	190J	400mØ	80 †	150C		15m	150C	100			Si△	S87f
10	100E10	100	100	150C	2 0k	4.0m		190J	1 0	140	25C		40m	25C	100			Si	S83△⧄
11	100F10	100	100	150C	2 0k	4.0m		190J	1.0	140	25C		40m	25C	100			Si	M56a△⧄
12	150L10A	100 †	100	150C	3 0k§	8 3m		200J	1 2	150 †	150C		16m⧄	150C	100			Si*	DO30⧄
13	S4210	100	104	120C	1 5k		2 5 Ø⧄	175J	.60 Ø	104	25A		5.0mØ	150C	100	280		Si△	DO8△
14	1N1661	100	116	120C	3 0k			175J	1 3	200	25		10m	150	100			Si	S14d
15	10912A	100	125	150	1 7k	8 3m		200J	1.3	125	25C		10m⧄	150C	100			Si	DO8
16	1N1474	100	150					190J	1 5	150	25J	60m			100			Si	M56f
17	1N2437	100	150	75C	1 2k			175B	1 1	70	25		10m	150B	100			Si△	DO8
18♦#	15C1	100	150	90C	2 0k	10m		150S	1 5	150	40A	6.0m	30m	150	100			Si	S12J
19	1N3085	100	150	100C	3 0k§			200C	1 2	150	150C		25m	150C	100			Si	DO30
20	1N4587	100	150	110	3 0k			200A	1 4	150	110		30m	200	100			Si	DO8⧄
21#	S1PN125	100 %	150	110B	3 3k			150J	1 1	150			30m		100			Si*	S319⧄
22#	S1BR125	100 %	150	115B	3 3k			150J	1 1	150			40m		100			Si*	F19
23#	S1KN125	100 %	150	115B	3 3k			170J	1 1	150			30m		100			Si*	F80⧄
24#	45M10	100	150	116B	3 0k	10m		175A	1.5 †	500	175J		20m		100			Si	S8m
25#	SU101A,K	100 †	150	120C	600		30	150C	1 2	30	25C	200u	2 0m	150C	100			Si△	S168a⧄
26#	S1LN125	100 %	150	125B	3 3k			150J	1 1	150			30m		100			Si*	M521⧄
27	150K10A	100 †	150	150C	3 0k§	8 3m		200J	1 2	150 †	150C		16m⧄	150C	100			Si*	DO8⧄
28	ST710	100	160	25A	3 0k			190J	1 2	160	25A		40m	25	100			Si	Z28
29	ST1010	100	160	25	3 0k			190J	1 2	160	25		40m	25	100			Si	Z27
30	1N4879	100 $	160	120C	2 2k			150C	1.3	160	120C		10m	120C	100	400		Si	DO9
31	S5110	100	160	120C	2 2k		3 Ø⧄	175J	60 Ø	160	25A		10mØ	150C	100	280		Si△	DO9△
32	1N1282	100 *	160	125C	1 3k			190J	1 3	210	25J		40m	25	100			Si	S14g
33	1N1292	100 *	160	125C	1.3k			190J	1.3	210	25J		40m	25	100			Si	S8e
34	1N3261	100 †	160	125C	2 0k			190J	1 25	160	125C		12m	125C	100			Si	DO9⧄
35	160E10	100	160	150C	5 0k	4 0m		190J	1 0	160	25C		40m	25C	100			Si	S83△⧄
36	175E10	100	175	150C	5 0k	4 0m		190J	1 0	175	25C		40m	25C	100			Si	S83△⧄
37	175F10	100	175	150C	5 0k	4 0m		190J	1.0	175	25C		40m	25C	100			Si	M56a△⧄
38	1N1478	100	200					190J	1.5	200	25J	100m						Si	M56c
39	SCDAS1	100	200	55A	900			150A				50u	500u	100A	100			Si	M495
40	SCNAS1	100	200	55A	900			150A				50u	500u	100A	100			Si	M495
41	SCPAS1	100	200	55A	900			150A				50u	500u	100A	100			Si	M495
42	200UB10	100	200	115C	3.5k§	8.3m		165J	1.25	200 †	115C		10m⧄	115C	100			Si*	S279⧄
43	S1BN200	100 %	200	120B	4 0k			150B	600mØ	190	25B		40m	125C	100			Si	F19a
44	411B	100	200	130	3 0k	8 3m		200J	1.5	125	130C		8.0m⧄	130C	100			Si	DO8
45	MR1221FB	100	200	138C	3.6k	8.3m		190C	.40 Ø	160	150C		20m	150C	100			Si△	M227
46	MR1221FL	100	200	138C	3 6k	8 3m		190C	40 Ø	160	150C		20m	150C	100			Si△	M228
47	MR1221SB	100	200	138C	3 6k	8 3m		190C	40 Ø	160	150C		20m	150C	100			Si△	S199a
48	MR1221SL	100	200	138C	3.6k	8 3m		190C	40 Ø	160	150C		20m	150C	100			Si△	S87b
49▼#	20C1	100	220	100C	3 5k	10m		150S	1.5	220	40A	5 0m			100			Si	S184
50	410B	100	220	110C	3 0k	8 3m		190J	1 3	150	110C		10m⧄	110	100			Si	DO8
51▼#	1S2342	100	240	92C	5 0k§	8.3m		150J	1.2	400	25C		30m	150J	100			Si△	M568
52♦#	FD200B2	100	240	92C	5 0k§	8 3m		150J	1.2	400	25C		30m	150J	100			Si△	M568
53	1N1671	100 *	240	120C	1 8k			190J	1 25	300	25J		50m	25	100			Si	S14f
54	1N3162	100 *	240	120C	3 0k			190J	1 25	240	25C		16m	125C	100			Si	S14f2
55	1N1331	100 *	240	125C	1 8k			190J	1.25	300	25J		50m	25	100			Si	S14f2
56	1N1377	100 *	240	125C	1 8k			190J	1 25	300	25J		50m	25	100			Si	S14h
57	240E10	100	240	150C	7.5k	4 0m		190J	1 0	240	25C		50m	25C	100			Si	S83△⧄
58	240F10	100	240	150C	7 5k	4 0m		190J	1 0	240	25C		50m	25C	100			Si	M56a△⧄
59	ST810	100	250	25A	5 0k			190J	1 2	250	25		50m	25	100			Si	Z27
60	ST910	100	250	25A	5.0k			190J	1 2	250	25		50m	25	100			Si	Z28
61	A96A	100	250	70C	3 3k	8 3m		125J	1 25	250	25		16m	70C	100			Si	S120b
62	A97A	100	250	70C	3 3k	8.3m		125J	1 25	250	25		16m	70C	100			Si	S120b
63▼#	25C1	100	250	90C	4 0k	10m		150S	1 5	250	90C	8 0m	45m	150	100			Si	S184
64	1N2055	100	250	100C	4 5k§			200C	1 3 †	250	135C		25m	135	80			Si	DO9
65	CH119A	100 †	250	100C	4.0k			200S	1 3	250	25C		15m	100C	100			Si	DO8⧄
66#	70M10	100	250	107B	4 0k	10m		175A	1.5 †	800	175J		20m		100			Si	S8n
67	1N4880	100 $	250	120C	4 0k			150C	1 2	250	120C		10m	120C	100	400		Si	DO9
68	S5310	100	250	120C	4 0k		4 Ø⧄	175J	60 Ø	250	25A		10mØ	150C	100	280		Si△	DO9△
69	1N3735	100	250	130C	4 5k	8 3m		200C	1.1 △	250	130C		16m	130B	100			Si	DO9⧄
70	A90A	100	250	130B	4 5k	8 3m		200J	400mØ	250	130B		16m	130B	100			Si	DO9
71	A91A	100	250	130B	4 5k	8 3m		200J	400mØ	250	130B		16m	130B	100			Si	DO9
72	70S10	100	250	135C	4 5k§	8 3m		200J	1.25	250 †	135C		25m⧄	135C	100			Si*	S8b2⧄
73	70T10△	100	250	135C	4 5k§	8 3m		200J	1.25	250 †	135C		25m⧄	135C	100			Si*	S8b1⧄
74#	S21N100H	100	270	75C	3 4k	10m		175J	1 45	600	25A	30m	80m	175C	100			Si△	M199
75	1N4045	100	275	120C	5 0k			190J	1 35	275	120C		15m	120C	100			Si	DO9⧄
76	CS131A	100 †	275	120C	4 0k			200	1 3	275	25C		16m⧄	130C	100			Si	DO9
77	275E10	100	275	150C	7 5k	4 0m		190J	1 0	275	25C		50m	25C	100			Si	S83△⧄
78	275F10	100	275	150C	7 5k	4 0m		190J	1.0	275	25C		50m	25C	100			Si	M56a△⧄
79#	S1EN270	100 %	290	125B	1 5k	20m		160B†	975	340			50m	125B	100			Si*	M307
80#	S1FN270	100 %	290	125B	1 5k	20m		160B†	975	340			50m	125B	100			Si*	M357c
81#	S1GN270	100 %	290	125B	1 5k	20m		160B†	975	340			50m	125B	100			Si*	M357a
82♦#	S1HN270	100 %	290	125B	7.2k	10m		160B†	975m	340			50m	125B	100			Si*	M366a
83▼#	30C1	100	300	90C	5.0k	10m		150S				15m	75m	150					
84▼#	40C1	100	300	100C	5 0k	10m		150S	1 5	300	40A	10m			100			Si	M366
85	S1EN301	100	300	100B	5 1k	10m	410	100B	.65 Ø	300	100B		35m	100B	100			Si	M307
86	S1FN301	100	300	100B	5 1k	10m	410	100B	65 Ø	300	100B		35m	100B	100			Si	M248
87	S1GN301	100	300	100B	5 1k	10m	410	100B	65 Ø	300	100B		35m	100B	100			Si	M248a
88	S1HN301	100	300	100B	5 1k	10m	410	100B	.65 Ø	300	100B		35m	100B	100			Si	M370
89	300U10A	100 †	300	120C	5 0k§	8 3m		200J	1 4	300 †	120C		16m⧄	120C	100			Si*	DO9⧄
90	MR1231FB	100	300	135C	5 0k	8 3m		190J	40 Ø	240	150C		35m	150C	100			Si	M227a⧄
91	MR1231FL	100	300	135C	5 0k	8 3m		190J	40 Ø	240	150C		35m	150C	100			Si	M228b⧄
92	MR1231SB	100	300	135C	5 0k	8 3m		190J	40 Ø	240	150C		35m	150C	100			Si	S199b⧄
93	MR1231SL	100	300	135C	5 0k	8 3m		190J	40 Ø	240	150C		35m	150C	100			Si	S87c⧄
94#	S1EN290	100 %	310	125B	1 6k	20m		160B†	.975	340			50m	125B	100			Si*	M307
95#	S1FN290	100 %	310	125B	1 6k	20m		160B†	975	340			50m	125B	100			Si*	M357c
96#	S1GN290	100 %	310	125B	1 6k	20m		160B†	975	340			50m	125B	100			Si*	M357a
97♦#	S1HN290	100 %	310	125B	7 2k	10m		160B†	975m	340			50m	125B	100			Si*	M366a
98#	S1EN310	100 %	330	125B	1 7k	20m		160B†	90	400			50m	125B	100			Si*	M307
99#	S1FN310	100 %	330	125B	1 7k	20m		160B†	90	400			50m	125B	100			Si*	M357c
100#	S1GN310	100 %	330	125B	1 7k	20m		160B†	90	400			50m	125B	100			Si*	M357a
101#	S1HN310	100 %	330	125B	1 7k	20m		160B†	.90	400			50m	125B	100			Si*	M366a
102#	S1EN300	100 %	340	125B	2 0k	20m		160B	900m	340			50m	125	100			Si*	M307
103▼#	S1HN300	100 %	340	125B	7.2k	10m		160B	900m	340			50m	125	100			Si*	M307
104#	S1GN350	100 %	370	15B	2 0k	20m		160B†	90	400			50m	125B	100			Si*	M357a
105#	S1EN350	100 %	370	125B	2 0k	20m		160B†	90	400			50m	125B	100			Si*	M307
106#	S1FN350	100 %	370	125B	2 0k	20m		160B†	90	400			50m	125B	100			Si*	M357c
107♦#	S1HN350	100 %	370	125B	7 8k	10m		160B†	900m	400			50m	125B	100			Si*	M366a
108	A396A	100	400	70C	3 3k	8 3m		125C	1 3 Ø	400	25		16m	70C	100			Si	M377a
109	1N3586	100	400	120C				190J	1 1	520	25C		75m	25C	100			Si	S83a△
110	A390A	100	400	145	4 5k			200J	.40	400	130C		16m	130C	100			Si△	M377a

SYMBOLS AND CODES EXPLAINED IN INTERPRETER

5. RECTIFIERS

IN ORDER OF (1) PIV, (2) MAX AVG FWD CURRENT (3) TEMPERATURE, and (4) TYPE No.

LINE No	4 TYPE No.	1 PIV (V)	MAX AVG FWD DC CURRENT 2 Io (A)	3 at TEMP (°C)	MAX RATINGS @ 25°C SURGE CUR. PEAK 1 Cy (A)	PULSE WIDTH (s)	DISS. (W)	MAX. TEMP (°C)	MAXIMUM FORWARD VOLTAGE DROP Vf (V)	at If (A)	at TEMP (°C)	MAX. REVERSE CURRENT Ir @25°C & Vr (A)	Ir at T & Vr (A)	TEMP T (°C)	TEST VOLT Vr (V)	AVALANCHE RATINGS MAX V BKDN. (V)	MIN SLOPE (A/V)	DESCRIPTION MAT.	DWG. No.
1	MR1241FB	100	400	150C	8 0k	8 3m		190J	40 Ø	400	150C		50m	150C	100			Si	M227b☑
2	MR1241FL	100	400	150C	8 0k	8 3m		190J	40 Ø	400	150C		50m	150C	100			Si	M228a☑
3	MR1241SB	100	400	150C	8 0k	8 3m		190J	40 Ø	400	150C		50m	150C	100			Si	S199c☑
4	MR1241SL	100	400	150C	8 0k	8.3m		190J	40 Ø	400	150C		50m	150C	100			Si	S87d☑
5	450E10	100	450	150C	12k	4.0m		190J	1.1	450	25C		75m	25C	100			Si	S83a△☑
6	450F10	100	450	150C	12k	4 0m		190J	1.1	450	25C		75m	25C	100			Si	M56b△☑
7	783B	100	485	130C	5 0k	8 3m		190J	1 9	400	130C		10m☑	130C	100			Si	
8#	S1GR311	100	490	100B	7 5k			175J	670mØ	490			25m		100			Si△	M522
9#	S1HR311	100	490	100B	7 5k			175J	670mØ	490			25m		100			Si△	M523
10	500UDF10A	100 †	500	130C	9.0k§	8 3m		200J	1.35 †	500 †	130C		30m	130C	100			Si	M448$
11	784B	100	650	150C	8 0k	8 3m		190J	1.3	500	150C		10m☑		100			Si	
12	MR1261	100	650	150C	12k	8 3m		190J	.40 Ø	650	150C		100m	150C	100			Si	M228c☑
13	MR2081HA	100 †	750	150C	12k	8 3m		150A	50 Ø	750	150C	4 0m	80m	150C	100			Si△	M228c#☑
14#	S1BR501	100	830	100B	16k	10m	850	165J	470mØ	800			20m	100B	100			Si△	M429☑
15	A540A	100	1 0k		10k			200J	1 08		150C		50m	200J	200			Si△	M463
16	MR1291	100 $	1000	150C	18k	8 3m		190C	40 Ø	1k	150C		200m	150C	70			Si△	M306†
17	MR2101HA	100 †	1100	150C	18k	8 3m		150A	50 Ø	1 1k	150C	5 0m	100m	150C	100			Si△	M427#☑
18	A570A	100	1 5k	75C	15k	8 3m		200J	400mØ		130C		50m	200J	100			Si	M463
19#	0300	105 #	50	50A	30			150J	1 2 △	50	25A	1 0u			50			Si*	A9h△
20#	0310	105 #	50	50A	30			150J	1 2 △	50	25A	10u			50			Si*	A9h△
21#	0320	105 #	50	50A	30			150J	1.2 △	50	25A	10u			50			Si*	A9h△
22	1N249C	110	20	150C	350			175C	60	20	25		3 6m	150C	110			Si△	D05△
23#	SD120	120	.03	25A$				150A				10u			120			Si	
24#	LPA2H	120	.23	25A	3 0	10m	25	150A	1 09	23	25A	01u	01m	100A	120	190		Si#	D07
25	ED3001	120 *	50	50	20	8 3m	1 0	100A	1 5 △	1 0	25	10u	03m	100	100			Si△	A1bk
26	ED3001A	120 *	75	50	25	8 3m	1 0	100A	1 3 △	1 0	25	10u	03m	100	100			Si△	A1bk
27#	BY122	120	800m	35A	15	10m	2 2	150A	3 2	3 0	25A							Si△	M117d*
28	ED3001B	120 *	1 0	50	30	8 3m	1 0	100A	1.1 △	1.0	25	10u	03m	100	100			Si△	A1bk
29#	BY164	120	1 4	40A	25		2.7	150J										Si	
30#	1S446△	120	3.0	100	1 5	20m	300	150A	1 5	3 0	25					220		Si	S4a☑
31	1N5180	120	4 0	25A	100			175A	1 25	4 0	25A	5 0u	.10m	100A	100			Si	A146e
32	JAN1N1184,R	120	35	150C	500	8 3m		150A	1 4 †	110	25	20u	3.0m	150C	100			Si	D05
33#	SJ103H	125	1 0	30A	32	10m		150J	1 0	750m	25A	10u	50u	120A	125			Si△	A31n
34	JAN1N249B,RB	125	20	150C	350	8 3m		150C	1 3 †	60	25C	5 0m	1 5m	150C	100			Si	D05☑
35	1N3952	130 *	20	25A$				200S	74	20	25		5 0u	150	130			Si	D07
36#	MA102	135 #	6 0	25$	25			75					10m	25	25			Ge*	C24
37	LA200	140	75	50A	35			150C	1 0	75	25A	2 0u				299			A1ew
38	LAA200	140	1 0	50A	50			150C	90	1 0	25A	2 0u				299			A1bc
39#	B4Y2-140M	140	2 0	25A	10 †			150J										Si	C113
40	LAB200	140	2 0	50A	80			150C	1 0	2 0	25A	15u				299			A1bc
41	LAC200	140	3 0	25A	300			150C	1 0	3 0	25A	45u				299			A1ey
42#	B4Y5-140M	140	5 0	25A	20 †			150J										Si	C113
43#	B4Y10-140M	140	10	25A				150S										Si	M479
44#	B4Y20-140M	140	20	25A	80 †			150S										Si	M479a
45	1N998	150 ☑					25	200S	1 0	20	25A	1 0n	3 0u	150	125			Si	D07
46	P1E5	150	05	50	30			175	1 0	05	25	10u	.50m	100	150			Si	M343
47	JAN1N458	150 *	55m	25				150A	1 0	7 0m	25	25n	5 0u	150	125			Si	A1dd
48#	1S358	150	10	25	40	1		150	1 2	10	25A	10u		25A	100			Si*	A1ce
49#	1S458	150	10	25A	50			150J	1 1	10	25A	50u			130			Si*	D07
50	P2E5	150	10	50	30			175	1 0	10	25	10u	50m	100	150			Si	M343
51#	BA194	150	150m	150J	2 0	1 2	600m	175J	920m§	400m	65	200n	25u	100	150			Si	A31g
52#	1S121☑	150	20	25A	1 0	1		150A	1 0	20	25A	10u	.01m	100	150			Si△	A1
53	CD1124	150	20	25$	2 5			200A					100uØ	100A	150			Si	A1bz
54	PS015	150	200m	25A	3 2	10m		200A	1 0	100m	25A		100u☑	100A	150			Si	A60p
55	P3E5	150	20	50	30			175	1.0	.20	25	10u	50m	100	150			Si	M343
56	1N2015	150	20	150A$				175A	1 5	50	25	1 0u	50m☑	150	150			Si	D012
57	1N3074	150	20	150A$				175J	1 5	50	25		50m	150	150			Si	A84
58#	LPA3H	150	23	25A	3 0	10m	25	150A	1 09	23	25A	01u	01m	100A	150	260		Si#	D07
59	S46	150	25	25$	20				1.35	40	25	10u			150			Si	A54
60#	BYX26-150	150	25	55A	2 5			100A	.90	.25	25A	1 0u	10m	100A	150	280		Si	D07
61	P4E5	150	30	50	30			175	1 0	30	25	10u	50m	100	150			Si	M343
62	1N601	150	30	100A	2 0	100m		170S	1 5	20	25	25u△			150			Si	D01
63	1N601A	150	30	100A	2 0	100m		170S	1 5	.40	25	1 0u△			150			Si	D01
64	AM415	150	40	25A				150A	1 2	40	25A		30m☑	150A	150			Si	D07
65	PS415	150	40	25A	3 3	10m		200A	1 5	50	25A		50m☑	150A	150			Si	A60p
66	P5E5	150	.40	50	30			175	1 0	.40	25	10u	50m	100	150			Si	M343
67#	DA002	150	50	25	40	10m	60	100	1 0	1 0	25	1 0u			150	260		Si△	A3k
68	MT023	150	50	25A	10		50	175A	1 0	50 ☑	25A	200n	15u	150A	150			Si	A60e
69	MT023A	150	50	25A	10		50	175A	1 0	50 ☑	25A	25n	5 0u	150A	150			Si	A60e
70	PS115	150	50	30A	3 3			200A	1 5	.50	25A		.50m☑	150A	150			Si	A47
71	P6E5	150	50	50	30			175	1 0	50	25	10u	50m	100	150			Si	M343
72	1N1030	150	.50	100A	30 §	4 0m		150A	1 5	50	25A	200u			150			Si	A73b
73	P7E5	150	60	50	30			175	1 0	60	25	10u	50m	100	150			Si	M343
74	1N2074	150	75	25A$									25m	100A	150			Si	A53
75	1N1646	150 †	75	50A	15			165A	.50 Ø	.25	150A		30mØ	150A	150			Si	A53
76	AM015	150	75	150A				150A	1 0	25m	25A		300u☑	150A	150			Si	D07
77	1N609	150	80	100A	3 0	8 3m		150A	1 5	20	25A	25u△			150			Si	D04
78	1N609A	150	.80	100A	3 0	8.3m		150A	1 5	40	25A	1 0u△			150			Si	D04
79#	SSiB0510	150	.85	45A	50	10m		150J	1 0	1 0	25J	1 0u			150			Si△	M441
80	GJ6M	150	1 0	25A	6 0			90J	1 0									Ge	S33
81	UR115Ø	150	1 0	25A	25	8 3m			1 0	1.0 ☑	25A	3 0u	05m	100A	150			Si	A146f
82#	BY135	150	1 0	50A	50			150J	1 3	2 0	25J	5 0u			150			Si△	A171d
83#	BYY31	150	1 0	50A	50			150J	1 3	2 0	25J	5 0u			150			Si△	D013
84	CJ1 5	150	1 0	50	50			150	1 1	1 0	50	5 0u	200u	100	165			Si△	D015
85	CL1 5	150	1 0	50A	50			150A	1 1	1 0	50A	5.0u	200u	100A	165			Si△	D027
86	CM1 5	150	1 0	50	50			150	1 1	1 0	50	5 0u	200u	100	165			Si△	D027
87	HAR15	150	1 0	75A	30	8 3m	1 0	175A	1 0	1 0	25	500n	15u	100	150	350		Si	A196a
88	1N1036	150	1 0	100A	30 §	4 0m		170C	1 5	1 0	25A	200u			150			Si	S65a
89	1N1042	150	1 0	100A	30 §	4 0m		170C	1 5	1 0	25A	200u			150			Si	S66b
90	1N1048	150	1 0	100A	30 §	4 0m		170C	1 5	1 0	25A	200u			150			Si	S68b
91#	SSiB0610	150	1 1	45A	50	10m		160J	1 0	2.0	25J	1 0u			150			Si△	A3v
92#	SSiC1710	150	1 1	45A	100	10m		150J										Si△	M441
93#	SSiB0110	150	1 25	45A	50	10m		180J	1 1	2.5	25J	1.0u			150			Si△	A31v
94	1N1054	150	1 5	100A	60 §	4 0m		150A	1 5	1 5	25A	1 0m			150			Si	A167v
95#	SSiC0810	150	1 6	45A	100	10m		180J	1 0	3 0	20J	1 0u			150			Si△	A31v
96	1N1229B	150	1 6	50$	30				1 2	1 0	25	10u	300u	150	150			Si	S25a
97	1N1219	150	1 6	135C	20			175J	1 5	2.5	25J	500u	1.5m	150J	150			Si	D01
98	1N1229	150	1 6	135C	20			175J	1 5	2.5	25J	500u	1 5m	150J	150			Si	S25
99	1N1219B	150 †	1 6	140C	25			175S	1 7	1.3	25	300uØ	10m△	25	150			Si	D01
100	1N1229A	150	1 6	140C	20			175J	1 5	2.5	25J	50u	50m	150J	150			Si	S25
101	1N1539	150	1 6	140C	20			175J	1.5	2 5	25J	50u	.50m	150J	150			Si	D04
102	1N1219A	150	1 6	175J$	20			175J	1 5	2 5	25J	50u	.50m	150J	150			Si	D01
103	UR215Ø	150	2 0	25A	40	8 3m			1 0	2 ☑	25A	3 0u	05m	100A	150			Si	A146f
104#	DS11	150	2.0	75J$	60			170J	.75	2.0	25	200u			100			Si△	
105	1N2350	150	3 0	50C	15			150A	1 1	1 0	25							Si	S19h☑
106#	1S1660	150	3 0	50A	90			150J	1.2	3 0	25A		1 0	150J	150			Si	S336
107	3C15	150	3.0	150				190	1 1	6 0	25		50m	150	150			Si	D04△☑
108#	BYY88	150	4.0	50B	50			150J	1 3	2 0	25J	5.0u			150			Si△	M41a
109#	SSiC1310	150	4 0	120C	100	10m		150J	1.1	7 0	20J	1 0u			150			Si△	S112b△
110	1N1060	150	5.0	100A	60 §	4 0m		170C	1 5	5.0	25A	1 0m			150			Si	S67a

SYMBOLS AND CODES EXPLAINED IN INTERPRETER

5. RECTIFIERS

IN ORDER OF (1) PIV, (2) MAX AVG FWD CURRENT (3) TEMPERATURE, and (4) TYPE No.

LINE No	4 TYPE No	1 PIV (V)	MAX AVG FWD DC CURRENT 2 Io (A)	3 at TEMP (°C)	MAX RATINGS @ 25°C SURGE CUR. PEAK 1 Cy (A)	PULSE WIDTH (s)	DISS (W)	MAX. TEMP (°C)	MAXIMUM FORWARD VOLTAGE DROP Vf (V)	at If (A)	at TEMP (°C)	MAX. REVERSE CURRENT Ir @25°C & Vr (A)	Ir at T & Vr (A)	TEMP T (°C)	TEST VOLT Vr (V)	AVALANCHE RATINGS MAX V BKDN (V)	MIN SLOPE (A/V)	DESCRIPTION MAT.	DWG No.
1	1N1066	150	5 0	100A	60 §	4 0m		170C	1 5	5 0	25A	1 0m			150			Si	S66c
2	1N1072	150	5 0	100A	60 §	4 0m		100	1.5	5.0	25A	1 0m			150			Si	S68c
3	366C	150 †	5 0	145C	100			180J	1.1	5.0	25C		10m	180	150			Si	S27
4	407C	150	5 0	150C	125	8 3m		175J	1 1	5 0	25C		2 0m⊘	175J	150			Si	DO4
5#	1S1662	150	6 0	50A	200			150J	1 2	6 0	25A		1 3	150J	150			Si	S336
6	6F15	150	6 0	55B$	50			190B					3 0m⊘	150	150			Si△	DO4
7	1N1343	150	6 0	150C	66		9 5	190J	1 2	10	25J		10m	25	150			Si	S26
8	1N1343A	150 †	6 0	150B$	150			200J	64 ⊘	6 0	150B		2 3m⊘	150B	150			Si*	DO4
9	1N1343B	150	6 0	150C	150			190J	1 1	6 0			02m	25C	150			Si△	DO4△
10	KR602CA	150	6 0	150S$	75			175S	1 2	6 0	150S		1 0m	150S	150			Si	DO10
11	KS602CA	150	6 0	150C$	75			175C	1.2 △	6.0	25		1 0m⊘	150C	150			Si△	DO4
12	1N2795	150	8 5	25A	75			175A	1 25	15	150C		5 0m	150C	150			Si	DO5
13	367C	150 †	10	130C	150			180J	1.2	10	25C		10m	180C	150			Si	S27
14	408C	150	10	145C	175	8 3m		175J	1 2	10	25C		2 0m⊘	175J	150			Si	DO4
15	1N2021	150 †	10	150C	110	8 3m		175C	1 5	25	25		5 0m	150C	150			Si	DO5
16#	1S1652	150	12	50A	200			150J	1 2	12	25A		1 5	150J	150			Si	S335
17▼#	SSiE2710	150	12	110C	250	10m		110	1 35	23	25J		2 0m	110J				Si△	M324a
18▼#	SSiE2810	150	12	110C	250	10m		110	1 35	23	25J		2 0m	110J				Si△	M324a
19	1N1201	150 *	12	150C	100		18	190J	1 4	20	25J	10u			150			Si	S27
20	1N1201A	150	12	150B$	240			150B	1 3	12	25A		3 0m	150A	150			Si△	DO4△⊘
21	1N1201B	150	12	150C$	250			150B	1 1	12	25A		1 0m	150A	150			Si	DO4△
22	UR123CA	150	12	150S$	240			175S	1 2	12	25		3 0m	150S	150			Si	DO10
23	12F15	150	12	155B$	65			190B					3.0m⊘	150	150			Si	DO4
24#	5M15	150	15	79B	300	10m		130A	1.3 †	50	130J		5 0m		150			Si	S193a
25	1N1078	150	15	100A	150 §	4 0m		170C	1 5	15	25A	20m			150			Si	S68d
26	15Q3	150	15	100A$				150	1 5	15			20m	25	150			Si	S68
27	368C	150	15	125C	240	8 3m		180J	1 3	15	25C		2 0m⊘	130C	150			Si	DO4
28	409C	150	15	125C	250	8 3m		175J	1 3	15	25C		2 0m⊘	175J	150			Si	DO4
29	703C	150	15	150C$	250			150C	1 22				5 0m	175J	150			Si	M78
30	1N3617	150	16	155B$	300			175B					2 3m	175B	150			Si△	DO4
31#	TH40A	150	20	100C	100	10m		125J	1 2	20	100C		1 0m	150J	200			Si△	M81
32	TR150△	150	20	100C$				175A	2.0				10m⊘	100C	150			Si	DO5
33	417C	150	20	150C	350	8 3m		175J	1 05	20	25C		2 0m⊘	150C	150			Si	DO5
34	2115	150	22	120C	200			175J	60 ⊘	22	25A		1.0m⊘	150C	150	350		Si△	DO4△
35	S2115	150	22	120C	200		1 ⊘⊘	175J	60 ⊘	22	25A		1 0m⊘	150C	150	350		Si△	DO4△
36	1N1193A	150	22	150B$	100	1		200J	1 2	60	25C		5 0m	175C	150			Si	DO5
37#	1S1654	150	25	50A	300			150J	1 2	25	25A		2 0	150J	150			Si	S335
38#	SSiE1310	150	25	135C	350	10m		150J	1 1	45	25J	20u			150			Si△	S290△
39#	SSiE1410	150	25	135C	350	10m		150J	1 1	45	25J	20u			150			Si△	S290△
40	25C15	150	25	140				190J	1 0	25	25C		20m	25	150			Si	DO5△⊘
41	25F15	150	25	140				190J	1 0	25	25C		20m	25	150			Si	M56△⊘
42	1N1193	150 *	25	145C	125		30	190J	1 4	30	25J	10u			150			Si	S29
43	418C	150	25	145C	400	8 3m		175J	1 1	25	25C		2 0m⊘	145C	150			Si	DO5
44#	SSiE1110	150	25	150C	400	10m		150J	1.0	30	20J	10u			150			Si△	M324a
45#	SSiE1210	150	25	150C	400	10m		150J	1.0	30	20J	10u			150			Si△	M324a
46	3115	150	30	25A	200		4 0 ⊘	50A	60 ⊘	34	25A		1 0m⊘	150C	150	350		Si△	DO5△
47	3215	150	33	25A	600		7 0 ⊘	150A	.60 ⊘	45	25A		2 0m⊘	150C	150	350		Si△	DO5△#
48	1N1185	150	35	140C	500	8 3		140C	1 7	35	140C							Si	S29a
49	35F15	150	35	140	900			190J	1 1	50	25		20m	25	50			Si	M56△⊘
50	371C	150 †	35	140C	500	8 3m		190J	1 2	35	25C		20m	190J	150			Si	DO5
51	127350AZ	150	35	150	500	8 3m		200J	1 3	35	25C		5.0m⊘	150C	150			Si	DO21
52	TR152	150	37	65C$				175S	1.5	50	25C		5.0m⊘	150C	150			Si	DO5
53#	10M15	150	40	104B	800	10m		130A	1 2 †	120	130J		10m		150			Si	S4s
54	419C	150	40	120C	500	8 3m		175J	1 2	40	25C		2.0m⊘	120C	150			Si	DO5
55	40HF15	150	40	140C	350			180J	1 3	40	140C		7 0m	140C	150			Si	S21b⊘
56	1N1185A	150	40	150B$	200	1		200J	1 1	100	25C		5 0m	175C	150			Si	DO5
57	127351AZ	150	44	150	700	8 3m		200J	1 3	40	25C		5 0m⊘	150C	150			Si	DO21
58	1N2448	150	45	60C	300			175B	1.1	20	25		5 0m⊘	150B	150			Si△	DO5
59#	1S1643	150	50	90A	1 0k			150J	1.2	50	25A		10	150J	150			Si	S199f
60	S3415	150	50	120C	600		2 ⊘⊘	175J	60 ⊘	50	25A		2 0m⊘	150C	150	350		Si△	DO5△
61	50C15	150	50	140	400	1	55	190J	1.1	50	25		20m	150	50			Si	DO5△⊘
62	1N1680	150	50	150C	700	8 3m		165C	1.2	1 1	150C		25m	150C	150			Si	S8q
63	MR1202	150	50	150C	800	8 3m		190J	40 ⊘	50	150C		10m	150C	150			Si	M226⊘
64	1N2460	150	60	60C	450			175B	1.1	30	25		5 0m⊘	150B	150			Si△	DO5
65	1N2130	150	60	100C	700 §			175C	1.4	60	115C		30m△	175C	120			Si	DO5
66	1N2130A	150	60	100C	900 §			200C	1.3	60	140C		30m△	200C	120			Si	DO5
67#	20M15	150	60	126B	1 0k	10m		175A	1.5 †	180	175J		10m		150			Si	S4t
68	TR153	150	65	75C				175C	1.5	100	25C		5 0m⊘	150C	150			Si	DO5
69	70H15	150	70	125C	1 2k§	8 3m		200J	1 3	70 †	125C		10m⊘	125C	150			Si*	DO5⊘
70	70H15A	150 †	70	125C	1 2k§	8 3m		200J	1 3	70	125C		10m⊘	125C	150			Si△	DO5⊘
71	1N1398	150 †	70	150C	1 2k			190J	1 25	70	150C		30m	150C	150			Si	S14b
72	1N3141	150	70	150C	1 2k			175S	90 △	70	190J		15m⊘	150C	150			Si	S206
73	CH109AZ2	150	70	150C	1 5k	8 3m		200C	1 3 △	150	150C		15m⊘	150C	150			Si*	S53△
74	75E15	150	75	150C	850	4 0m		190J	1 0	90	25C		40m	25C	150			Si	S83a△⊘
75	75F15	150	75	150C	850	4 0m		190J	1.0	90	25C		40m	25C	150			Si	M56a△⊘
76#	1S1645	150	100	50A	2 0k			150J	1 2	100	25A		10	150J	150			Si	S199g
77	1N2428	150	100	75C	950			175B	1 1	50	25		10m⊘	150B	150			Si△	DO8
78	MR1212SB	150	100	135C	2 0k§	8 3m	160	190J	400m⊘	80 †	150C		15m	150C	150			Si△	S199
79	MR1212SL	150	100	135C	2 0k§	8.3m	160	190J	400m⊘	80 †	150C		15m	150C	150			Si△	S87a
80	MR1812SB	150	100	135C	2 0k§	8 3m	160	190J	400m⊘	80 †	150C		15m	150C	150			Si△	S199m
81	MR1812SL	150	100	135C	2 0k§	8 3m	160	190J	400m⊘	80 †	150C		15m	150C	150			Si△	S87f
82	100E15	150	100	150C	2 0k	4 0m		190J	1 0	140	25C		40m	25C	150			Si	S83△⊘
83	100F15	150	100	150C	2 0k	4 0m		190J	1.0	140	25C		40m	25C	150			Si	M56a△⊘
84	150L15A	150 †	100	150C	3.0k§	8 3m		200J	1.2	150 †	150C		16m⊘	150C	150			Si*	DO30⊘
85	S4215	150	104	120C	1.5k		2 5 ⊘⊘	175J	60 ⊘	104	25A		5 0m⊘	150C	150	350		Si△	DO8△
86	1N1662	150	116	120C	3 0k			175J	1.3	200	25		10m	150	150			Si	S14d
87	10912AZ	150	125	150	1 7k	8 3m		200J	1 3	125	25C		10m⊘	150C	150			Si	DO8
88	45L15	150	150	70A	3 0k§	10m		190J	52 ⊘	150 †			20m⊘		150			Si*	DO30⊘
89	1N2438	150	150	75C	1 2k			175B	1 1	70	25		10m	150B	150			Si△	DO8
90#	45M15	150	150	116B	3 0k	10m		175A	1 5 †	500	175J		20m		150			Si	S8m
91	150K15A	150 †	150	150C	3 0k§	8 3m		200J	1.2	150 †	150C		16m⊘	150C	150			Si*	DO8⊘
92	S5115	150	160	120C	2 2k		3 ⊘⊘	175J	60 ⊘	160	25A		10m⊘	150C	150	350		Si△	DO9△
93	1N1283	150 *	160	125C	1 3k			190J	1.3	210	25J		40m	25	150			Si	S14g
94	1N1293	150 *	160	125C	1 3k			190J	1.3	210	25J		40m	25	150			Si	S8e
95	1N3262	150 †	160	125C	2 0k			190J	1 25	160	125C		12m	125C	100			Si	DO9⊘
96	160E15	150	160	150C	5 0k	4 0m		190J	1.0	160	25C		40m	25C	150			Si	S83△⊘
97	160F15	150	160	150C	5 0k	4 0m		190J	1.0	160	25C		40m	25C	150			Si	M56a△⊘
98	175E15	150	175	150C	5 0k	4 0m		190J	1.0	175	25C		40m	25C	150			Si	S83△⊘
99	175F15	150	175	150C	5 0k	4 0m		190J	1.0	175	25C		40m	25C	150			Si	M56a△⊘
100#	1S1647	150	200	60A	4.0k			150J	1.2	200	25A		30	150J	150			Si	S199h
101	411C	150	200	130	3 0k	8 3m		200J	1.5	125	130C		8.0m⊘	130C	150			Si	DO8
102	MR1222FB	150	200	138C	3 6k	8 3m		190C	40 ⊘	160	150C		20m	150C	150			Si△	M227
103	MR1222FL	150	200	138C	3 6k	8 3m		190C	40 ⊘	160	150C		20m	150C	150			Si△	M228
104	MR1222SB	150	200	138C	3 6k	8.3m		190C	40 ⊘	160	150C		20m	150C	150			Si△	S199a
105	MR1222SL	150	200	138C	3 6k	8 3m		190C	40 ⊘	160	150C		20m	150C	150			Si△	S8g
106	410C	150	220	110C	3 0k	8 3m		190J	1 3	150	110C		10m⊘	110	150			Si	DO8
107	1N1672	150 *	240	120C	1 8k			190J	1.25	300	25J		50m	25	150			Si	S1f
108	1N3163	150 *	240	120C	3 0k			190J	1 25	240	25C		16m	125C	150			Si	S14f2
109	1N1332	150 *	240	125C	1 8k			190J	1 25	300	25J		50m	25	150			Si	S14f2
110	1N1378	150 *	240	125C	1 8k			190J	1 25	300	25J		50m	25	150			Si	S14h

SYMBOLS AND CODES EXPLAINED IN INTERPRETER

5. RECTIFIERS

IN ORDER OF (1) PIV, (2) MAX AVG FWD CURRENT (3) TEMPERATURE, and (4) TYPE No.

LINE No.	TYPE No.	1 PIV (V)	MAX AVG FWD DC CURRENT 2 Io (A)	3 at TEMP (°C)	MAX RATINGS @ 25°C SURGE CUR. PEAK 1 Cy (A)	PULSE WIDTH (s)	DISS. (W)	MAX. TEMP (°C)	MAXIMUM FORWARD VOLTAGE DROP Vf (V)	at If (A)	at TEMP (°C)	MAX. REVERSE CURRENT Ir @25°C & Vr (A)	Ir at T & Vr (A)	TEMP T (°C)	TEST VOLT Vr (V)	AVALANCHE RATINGS MAX V BKDN. (V)	MIN SLOPE (A/V)	MAT.	DESCRIPTION DWG. No.
1	240E15	150	240	150C	7.5k	4.0m		190J	1 0	240	25C		50m	25C	150			Si	S83△⊠
2	240F15	150	240	150C	7 5k	4 0m		190J	1.0	240	25C		50m	25C	150			Si	M56a△⊠
3	1N2056	150	250	100C	4.5k§			200C	1 3 †	250	135C		25m	135	120			Si	DO9
4	CH119AZ	150 †	250	100C	4 0k			200S	1.3	250	25C		13m	100C	150			Si	DO8⊠
5#	70M15	150	250	107B	4 0k	10m		175A	1 5 †	800	175J		20m		150			Si	S8n
6	S5315	150	250	120C	4 0k		4 ∅⊠	175J	60 ∅	250	25A		10m∅	150C	150	350		Si△	DO9△
7	70U15A	150 †	250	130C	4 5k§	8 3m		200J	1 3	250 †	130C		16m⊠	130C	150			Si*	DO9⊠
8	70S15	150	250	135C	4 5k§	8.3m		200J	1 25	250 †	135C		25m⊠	135C	150			Si*	S8b2⊠
9	70T15△	150	250	135C	4 5k§	8 3m		200J	1.25	250 †	135C		25m⊠	135C	150			Si*	S8b1⊠
10	1N4046	150	275	120C	5 0k			190J	1 35	275	120C		15m	120C	150			Si	DO9⊠
11	CS131AZ	150 †	275	120C	4.0k			200	1 3	275	25C		16m⊠	130C	150			Si	DO9
12	275E15	150	275	150C	7 5k	4 0m		190J	1 0	275	25C		50m	25C	150			Si	S83△⊠
13	275F15	150	275	150C	7 5k	4 0m		190J	1 0	275	25C		50m	25C	150			Si	M56a△⊠
14	300U15A	150 †	300	120C	5.0k§	8.3m		200J	1 4	300 †	120C		16m⊠	120C	150			Si*	DO9⊠
15	MR1232FB	150	300	135C	5 0k	8 3m		190J	40 ∅	240	150C		35m	150C	150			Si	M227a⊠
16	MR1232FL	150	300	135C	5 0k	8 3m		190J	40 ∅	240	150C		35m	150C	150			Si	M228b⊠
17	MR1232SB	150	300	135C	5 0k	8 3m		190J	40 ∅	240	150C		35m	150C	150			Si	S199b⊠
18	MR1232SL	150	300	135C	5 0k	8 3m		190J	40 ∅	240	150C		35m	150C	150			Si	S87c⊠
19	400E15	150	400	150C	12k	4 0m		190J	1 1	450	25C		75m	25C	150			Si	S83a△⊠
20	400F15	150	400	150C	12k	4 0m		190J	1 1	450	25C		75m	25C	150			Si	M56b△⊠
21	MR1242FB	150	400	150C	8 0k	8 3m		190J	40 ∅	400	150C		50m	150C	150			Si	M227b⊠
22	MR1242FL	150	400	150C	8 0k	8 3m		190J	40 ∅	400	150C		50m	150C	150			Si	M228a⊠
23	MR1242SB	150	400	150C	8 0k	8 3m		190J	40 ∅	400	150C		50m	150C	150			Si	S199c⊠
24	MR1242SL	150	400	150C	8 0k	8.3m		190J	40 ∅	400	150C		50m	150C	150			Si	S87d⊠
25	450E15	150	450	150C	12k	4 0m		190J	1 1	450	25C		75m	25C	150			Si	S83a△⊠
26	450F15	150	450	150C	12k	4 0m		190J	1 1	450	25C		75m	25C	150			Si	M56b△⊠
27	784C	150	650	150C	8 0k	8.3m		190J	1 3	500	150C		10m⊠		150			Si	
28	MR1262	150	650	150C	12k	8 3m		190J	40 ∅	650	150C		100m	150C	150			Si	M228c⊠
29	MR1292	150 $	1 0k	150C	18k	8 3m		190C	40 ∅	1 0k	150C		200m	150C	105			Si△	M306†
30#	0301	160 #	50	50A	30			150J	1.2 △	50	25A	1.0u			100			Si*	A9h△
31#	0311	160 #	50	50A	30			150J	1 2 △	50	25A	10u			100			Si*	A9h△
32#	0321	160 #	50	50A	30			150J	1 2 △	50	25A	10u			100			Si*	A9h△
33#	S2M2	160	60	25A	8 0		7 3	125				1 0u	05m	125J	160			Si△	DO14
34#	S2CN1	160	1 5	40A	45		1 7	150A				10u	25m	150J	160			Si△	A31n
35#	GEX542	160	10	25A	450	10		65J	550m	8 0	25A		15m	65A	160				S16
36#	S2BR25	160 †	40	120B	250	20m		140B	1 2	40			20m		160			Si*	S122⊠
37#	S2CR25	160 †	40	120B	250	20m		140B	1 2	40			20m		160			Si*	S123⊠
38#	S2DR25	160 †	40	120B	250	20m		140B	1 2	40			20m		160			Si*	S125⊠
39#	S2ER25	160 †	40	120B	250	20m		140B	1 2	40			20m		160			Si*	S124⊠
40#	S2BR30	160 †	44	125B	250	20m		140B	1 1	44			16m		200			Si*	S122⊠
41#	S2CR30	160 †	44	125B	250	20m		140B	1 1	44			16m		200			Si*	S123⊠
42#	S2DR30	160 †	44	125B	250	20m		140B	1 1	44			16m		200			Si*	S125⊠
43#	S2ER30	160 †	44	125B	250	20m		140B	1 1	44			16m		200			Si*	S124⊠
44#	S2AN70	160 †	77	115B	450	20m		150B	1 0	70			30m		200			Si	F19
45#	S2BR70	160 †	77	115B	450	20m		150B	1 0	70			40m		200			Si	F19
46#	S2AN125	160 †	175	125B	1 1k	20m		150B	1 1	175			30m		200			Si	F19
47#	B40C600†	170	500m∅	45A	30	10m		150J										Si△	M550
48#	B40C3200-2200†	170	2.2 ∅	45A	100	10m		150J										Si△	M551
49#	B40C5000-3000†	170	3 0 ∅	45A	100	10m		150J										Si△	M552
50	6RS20PH6RGD1	180	065	25				85A	12 5			40u			135				M19
51	1N254	190	40	135C	1 5			150A	1 5	50	135C		01m	135C	150			Si	S11a
52	G5C3	200		150C	1 5k			175J	1 3	200	25C		5 0m	150C	200			Si	DO8
53#	SD200	200	022	25A$				150A				10u			200			Si	
54	JAN1N459	200 *	40m	25				150A	1 0	3 0m	25	25n	5 0u	150	175			Si	A1dd
55	1N881	200	05	25A$	50			200S	60	05			02m		200			Si	A1bz
56	P1F5	200	05	50	30			175	1 0	05	25	10u	50m	100	200			Si	M343
57	1N870	200	10	25A$	1.0			200S	60	10			02m		200			Si	A1bz
58#	1S459	200	10	25A	50			150J	1 3	10	25A	50u			180			Si*	DO7
59	10R2B	200	10	25	60			175	2 0	10	25	5 0u	50m	100	200			Si	
60	PS2413	200	10	25A$					2 0	5m	25A	5.0u			200			Si	C15
61	S202	200	10	25$	15				1.2	15	25	100u			200			Si	A54
62	P2F5	200	10	50	30			175	1 0	10	25	10u	50m	100	200			Si	M343
63	1N92	200 ∅	10	55A$	25			95A	19 ∅	10	55A		95m∅	55A	200			Ge*	DO3
64	1N368	200	10	55A				85S	48	10	55A		30m	55A	150			Ge	DO3
65	1N361	200	10	100$				150C	2 0	20	25C		250u∅	100A	200			Si	DO2
66	1N3755	200	13	65A	30			100A	1 0	13	25	5 0u			200			Si△	C13
67	1N859	200	15	25A$	1 5			200S	60	15			02m		200			Si	A1bz
68	S92⊠	200	15	25$	25				90	15	25	950u			200			Si	A54
69	M69A	200	15	50	50	8 3m		175	1 2		25	10u						Si	A3h
70#	SM150S	200	15	50	32	20m	15	120	1 0	20	50	10u			200			Si	A138a
71	CER69A	200	15	75A	48	4.0m		150A	1 2	15	100	10u△	20m	100	200			Si	DO27
72	1N361A	200	15	100$	10			150	60 ∅	25	25C	1 0u	15u	100A	200			Si	DO2
73	1N678	200	20	25A	2 0	1		175A	1 0	40	25A	1 0u	20m∅	150A	200			Si	DO7
74	1N848	200	20	25A$	2 0			200S	60	20			02m		200			Si	A1bz
75	A1C1	200	20	25	60			175A	50		150	1.0u	50m	150	200			Si	A84a
76	A1C5	200	20	25	60			175A	50		150	5 0u	50m	150	200			Si	A84a
77	A1C9	200	20	25	60			175A	50		150	10u	50m	150	200	100	200u	Si	A84a
78	B1C1	200	20	25	60			175A	50		150	1 0u	.50m	150	200			Si	A1rx
79	B1C5	200	20	25	60			175A	50		150	5 0u	50m	150	200			Si	A1rx
80	B1C9	200	20	25	60			175A	50		150	10u	50m	150	200	100	200u	Si	A1rx
81#	BY183-200	200	200m	25A	2 0	10m		100J	1 2	100m		1.0u			200			Si△	DO7
82	CD1125	200	20	25$	2 5			200A					100u∅	100A	200			Si	A1bz
83#	M22	200	20	25A	3 0	10m	25	150A†	1 0	20 †	25		15m	125A	200			Si△	DO7
84	PS020	200	200m	25A	3 2	10m		200A	1 0	100m	25A		100u⊠	100A	200			Si	A60p
85	K1C5	200	20	50	60			150C	2 0	20	25	5 0u	50m	100C	200			Si	
86	P3F5	200	20	50	30			175	1 0	20	25	10u	50m	100	200			Si	M343
87	S92△	200 ∅	20	85A$	5 0 §			100S	1 5	20	85A		1 0m	85A	200			Si	DO2
88	AM23	200	20	100C$	8 0 §	8 0m		125A	1 25	20	25C		30m⊠	100C	200			Si	DO4
89	1N337	200	20	150C$	5 0			175B	2 0	40	25		10m⊠	150C	200			Si	DO4
90	1N346	200	20	150C$	5 0			175B	2 0	40	25		50m⊠	150C	200			Si	DO4
91	1N2016	200	20	150A$				175A	1 5	50	25	1 0u	50m⊠	150	200			Si	DO12
92	1N3075	200	20	150A$				175J	1 5	50	25		50m	150	200			Si	A84
93	CODI552	200	25	25$	20			100	1 1	40	25	10u			200			Si	A52g
94	S217	200	25	25$								500u			200			Si	A54
95	M69B	200	25	50	50	8 3m		175	1 2		25	10u						Si	A3h
96	CER69B	200	25	75A	48	4 0m		150A	1 2	25	100	10u△	20m	100	200			Si	DO27
97	S92H	200 *	25	85A$	5 0 §			150S	1 5	25	85A		50m	85A	200			Si	DO2
98	1N318	200	25	100$				200	2 0	40	25C		300u∅	100A	200			Si	DO2
99	1N318A	200	25	100$	10			200	60 ∅	40	25C	1 0u∅	15u∅	100A	200			Si	DO2
100	1N531	200	30	25A$	3 0	3 0m		150A	2 0	30	25A	7 5u			200			Si	DO3
101	1N1703	200	30	50A	8 0			125A	1 7	1 0	25A		30m∅	100A	200			Si	A53
102	P4F5	200	30	50	30			175	1 0	30	25	10u	50m	100	200			Si	M343
103	1N441	200 †	30	100A	15			165A	1.5	30	25	75u			200			Si	DO2
104	1N602	200	30	100A	2 0	100m		170S	1 5	20	25	25u△			200			Si	DO1
105	1N602A	200	30	100A	2.0	100m		170S	1 5	40	25	1.0u△			200			Si	DO1
106	1N679	200	40	25A	2.0	1		175A	1.0	40	25A	1 0u	20m∅	150A	200			Si	DO7
107	AM420	200	40	25A				150A	1 2	40	25A		30m⊠	150A	200			Si	DO7
108#	BYX60-200	200	400m	25A	2 5	1 0	600m	125A	1 2	400m	25A	1 0u	50u	100A	200			Si△	DO7
109	PS420	200	40	25A	3 3	10m		200A	1 5	50	25A		50m⊠	150A	200			Si	A60p
110	K2C5	200	40	50	60			150C	2.0	40	25	5 0u	50m	100C	200			Si	

SYMBOLS AND CODES EXPLAINED IN INTERPRETER

5. RECTIFIERS

IN ORDER OF (1) PIV, (2) MAX AVG FWD CURRENT (3) TEMPERATURE, and (4) TYPE No.

LINE No.	4 TYPE No.	1 PIV (V)	MAX AVG FWD DC CURRENT 2 Io (A)	3 at TEMP (°C)	MAX RATINGS @ 25°C SURGE CUR PEAK 1 Cy (A)	PULSE WIDTH (s)	DISS. (W)	MAX TEMP (°C)	MAXIMUM FORWARD VOLTAGE DROP Vf (V)	at If (A)	at TEMP (°C)	MAX. REVERSE CURRENT Ir @25°C & Vr (A)	Ir at T & Vr (A)	TEMP T (°C)	AVALANCHE RATINGS TEST VOLT Vr (V)	MAX V BKDN. (V)	MIN SLOPE (A/V)	DESCRIPTION MAT.	DWG No.
1	P5F5	200	40	50	30			175	1 0	40	25	10u	50m	100	200			Si	M343
2	1N325	200	40	100$				200	2 0	65	25C		300u∅	100A	200			Si	DO2
3	1N325A	200	40	100$	10			200	.60 ∅	65	25C	1.0u	16u	100A	200			Si	DO2
4	AM22	200 †	40	100C$	10 §	8 0m		125A	1.25	40	25C		.30m∅	150C	200			Si	DO4
5#	MT24	200	40	100A	2 0	1	50	200A	1 2	40 †	25		10m	150A	200			Si	DO7
6	JAN1N254	200 §	40	135A$	1 5	1		135A	1.5	50	25	10u			150			Si	S11a
7	1N336	200	40	150C$	10			175B	2.0	80	25		.10m∅	150C	200			Si	DO4
8	1N345	200	40	150C$	10			175B	2 0	80	25		50m∅	150C	200			Si	DO4
9#	BY125△	200	.425	50A	4 5	101m		100A	1 3	1 4	25A	1 0u	.02m	70A	200			Si△	C42j
10#	SG205	200	45	50A	10			150A	1.1	50	25A	50u	30m	150A	200			Si△	C42
11	A2C4	200	475	25	40	8 3m		175	1 2	50	25	1 0u	.50m	150	200			Si	A84
12	1N1253	200	.50	25A	15			165A	1 0 ∅	50	25A		.50m	125A	200			Si	A53
13	1N2082	200	50	25$	15			150A	75 ∅	50	25	350u∅			200			Si	A53
14	1N3228	200	500m	25$	12				3 3	500m			500u	150	200			Si	A1cs
15	BR22†	200	500m	25	20	8 0m		150	1 1	500m	50	5 0u			220			Si△	M533
16	CODI5524	200	50	25$	20			100	1 1	40	25	10u			200			Si	M45
17#	D25C	200	50	25A	30	10m	55	150A	1 2	50 †	25		.15m	125A	200			Si△	A100
18#	J200	200	50	25A	10			175A	1 1	50	25A	5 0u		25A	200			Si△	DO7
19	MB259	200	50	25	10	8 3m	2 0	175A	1 0	2 ∅	25	1 0u	.06m	100	200			Si	A60f
20	MT020A	200	50	25A	10		50	175A	1 0	50 ∅	25A	25n	5.0u	150A	200			Si	A60e
21	S17	200	50	25	15			150A	1 2	80	25	100u			200			Si	A54
22	S17A	200	50	25A$	15				1 2	.80	25	50u			200			Si	A54
23	WR200	200	50	25A	3.3			200	1.25	50	25A		10m	100	200			Si	DO7
24	PS120	200	50	30A	3 3			200A	1 5	50	25A		50m∅	150A	200			Si	A47
25	1N5215	200 †	50	40A	50 §			175A	1 2	1 0	75A		20m	75A	200			Si	A31r
26#	1S1221	200	50	40A	25	10m		120J	.95 △	50	25A	30u		25J	200			Si△	
27#	S2E20	200	50	40	25	20m		120	.95	50	25	30u			200	300		Si	A185a
28	5E2	200	500m	50	50 §			175	1 1	500m	50	2 0u	50u	100	220			Si△	DO27
29	5J2	200	500m	50	50 §			175	1 1	500m	50	2 0u	50u	100	220			Si△	DO15
30#	20AS	200	50	50A	15			100A	1 15	50	25A	10u			200			Si△	DO3
31	M69C	200	50	50	50	8 3m		175	1 2		25	10u						Si	A3h
32	P6F5	200	50	50	30			175	1 0	50	25	10u	.50m	100	200			Si	M343
33#	S05-02	200	500m	50	45	10m		125	1 0	500m	25	10u		25	200				A171a
34#	SE05S	200	50	50	48	20m	55	120	1 1	50	50	10u			200			Si	M98a
35#	SW05S	200	50	50	48	20m	55	120	1 1	50	50	10u			200			Si	A221d
36	1N1709	200	50	55A	10			125A	1 3	1 0	25A		.40m∅	150A	200			Si	A53
37#	SD1Z	200	50	60A	45	10m		100S	1 0	1 5	25A	10u△			200			Si△	A221b
38#	1S1942	200	500m	65A	35			125J	1 2	500m	25A		400m	125J	200			Si	A1bs
39#	1S312	200	50	70	25	10m		150	1 1	1 0	25	10u		25	200			Si	TO1
40#	DD 003	200	50	70A$	45			100A	.82	50	25A		01m	100A	200			Si△	A3k
41	1N3748	200	50	75A	20	8 0m		150A	1 5	50	25A	5 0u			200			Si	A1cm
42	CER69C	200	50	75A	48	4 0m		150A	1 2	50	100	10u△	20m	100	200			Si	DO27
43	1T502	200 †	50 ∅	85A	35			100A	1 2	.30	25	10u	.25m	100	200			Si	A3x
44	2T502	200 †	50 ∅	85A	35			100A	1.2	.30	25	10u	25m	100	200			Si	DO1
45	3T502	200 †	50 ∅	85A	35			100A	1 2	.30	25	10u	.25m	100	200			Si	DO13
46	4T502	200 †	50 ∅	85A	35			100A	1 2	30	25	10u	.25m	100	200			Si	DO7
47	ERD200	200 †	50 ∅	85	35			100A	1.2	30	25	10u	.25m	100	200			Si	M166
48	1N551	200 †	50	100A	4 0	3 0m		150A	1 5	50	25A	1 0u			200			Si	DO4
49	1N1031	200	50	100A	30 §	4 0m		150A	1 5	50	25A	200u			200			Si	A73b
50	1N1082	200	50	100A	30 §	4 0m		150A	1 5	500	25A	2.0m			200			Si	F22
51	20S5	200	50	100				175J	1 3	1 8	25C		2 0m	25C	200			Si	S41b
52	S101	200	50	100$	15				1 0	.80	25	100u			200			Si	A54
53	S222	200	50	100$	15				1 0	80	25	2 0u	300u	150	200			Si	A54
54	S252	200	50	100$	60				1 2	80	25		500u	100	200			Si	A54
55	TKF20	200	50	100A	30	8 3m		175A	1 1	1.0	25A	10u	50m∅	100A	200			Si	A84
56	1N3082	200	50	150A	15			200A	1 0	75	25A		20m	150A	200			Si	A84
57	JAN1N3189	200	50	150A$	30	8 3m		175A	1.0	.75	25	5 0u	.50m	150A	200			Si	A31a
58	1N3545	200	60	25A	15			200A	1 0	.50	25A	.20u	75m	175A	200			Si	A1
59	A2C1	200	60	25	60			175A	50		150	1 0u	.50m	150	200			Si	A84a
60	A2C5	200	60	25	60			175A	50		150	5 0u	50m	150	200			Si	A84a
61	A2C9	200	60	25	60			175A	50		150	10u	.50m	150	200	100	200u	Si	A84a
62	B2C1	200	60	25	60			175A	50		150	1 0u	50m	150	200			Si	A1rx
63	B2C5	200	60	25	60			175A	.50		150	5 0u	.50m	150	200			Si	A1rx
64	B2C9	200	60	25	60			175A	.50		150	10u	50m	150	200	100	200u	Si	A1rx
65	ER21	200	60	25A	15			150A	1 25	50	25		75u	100	200			Si	A3t
66	TM23	200	60	25C				125C	2 0	.20	25	30u∅	7 0u	100	200			Si	S145
67	1N1693	200 †	60	50A	20			115A	60	25	100A		50m∅	100A	200			Si	DO3
68#	1S147	200	60	50A	20			120S	1 2	60	25A	30u	25m	100A	200			Si△	A50
69#	5D2	200	60	50A	40	10m		150S	1 2	3 0	25A		100m	100	200			Si	A1bp
70	K3C5	200	60	50	60			150C	2 0	60	25	5 0u	50m	100C	200			Si	
71	P7F5	200	60	50	30			175	1 0	60	25	10u	50m	100	200			Si	M343
72	SD92	200	60	50A	10			125A	1 5	90	25		1 0m	100	200			Si	DO3
73	SM220	200	60	50$	20			150	1 2	95	25	10u			200			Si	A84
74	5MA2	200	625	100	50			140J	92	63	25		20m	100	200			Si	F29
75#	5E2	200	70	40A	11	10m		125J	1 0	50	25J	2 5u	.20m	125B	200			Si	A35a
76	1N1488	200 †	75	25A	15			140A	55 ∅	25	125A		.30m∅	125A	200			Si*	DO3
77	1N2069	200	75	25A	22			100A	1 2	50	25A	10u	20m	100A	200			Si	A1es
78	1N2069A	200	75	25A	22			100A	1 0	50	25A	5 0u	.50m	100A	200			Si	A1es
79	1N2075	200	75	25A$									.25m	100A	200			Si	A53
80	1N2105	200 ∅	75	25$				200	1 2	75	25	300u			200			Si△	A53
81	1N3239	200	75	25$	15				2 2	75			500u	150	200			Si	A1cs
82	1N3656	200	75	25A	15			200A	1 2	.50	25A	10u	30m	100A	200			Si	A60
83	75R2B	200	75	25	60			175	2 0	.75	25	5 0u	50m	100	200			Si	
84	A3C1	200	75	25	60			175A	50		150	1 0u	50m	150	200			Si	A84a
85	A3C5	200	75	25	60			175A	50		150	5 0u	50m	150	200			Si	A84a
86	A3C9	200	75	25	60			175A	50		150	10u	.50m	150	200	100	200u	Si	A84a
87	B3C1	200	75	25	60			175A	50		150	1 0u	50m	150	200			Si	A1rx
88	B3C5	200	75	25	60			175A	50		150	5 0u	.50m	150	200			Si	A1rx
89	B3C9	200	75	25	60			175A	50		150	10u	50m	150	200	100	200u	Si	A1rx
90	BR42†	200	750m	25	20	8 0m		150	1 1	750m	25	5 0u			220			Si△	M533
91	CODI532	200	75	25$	35			150	1 1	.80	25	1.0u			200			Si	A52g
92	CODI612	200	75	25$	35			150	1.1	.80	25	1 0u			200			Si	A9j
93	MB260	200	75	25	15	8.3m	2 0	175A	1 0	4 ∅	25	1 0u	.06m	100	200			Si	A60f
94	MB271	200	75	25	15	8 3m	2 0	175A	1 2	50 ∅	25	2 0u	75u	100	200			Si	A60f
95	PT520	200	75	25A	15	8 0m		125A	1 5	50	25A		.50m∅	100A	200			Si	DO2
96	S92A	200	75	25$	25				.90	1 2	25	950u			200			Si	A54
97	TS2	200	75	25A	25			125	1 2	75	25A	5.0u						Si	A1ev
98	UPI2069	200	750m	25A	22			100A	1 2	500m	25A	10u	200u	100A	200			Si	A1bg
99	UPI2069A	200	750m	25A	22			100A	1.0	500m	25A	5 0u	500u	100A	200			Si	A1bg
100	UT113	200	75	25A	15	8 3m	1 0		1 2	.50 ∅	25A	2 0u	75u	100A	200			Si	A146f
101	XS17	200	75	25	15							100u			200			Si	A54
102	XS17A	200	75	25	15							50u			200			Si	A54
103#	ZS172	200	750m	25A	70 §			150A	1 2	750m	25A	5 0u	150u	100A	200			Si	A52f
104#	ZR62	200	75	35A	30	10m		150A	1 1	75	25A	10u	.15m	100A	200			Si	A42
105	7E2	200	750m	50	60 §			175	1 1	750m	25	2 0u	50u	100	220			Si△	DO27
106	7J2	200	750m	50	60 §			175	1.1	750m	25	2 0u	50u	100	220			Si△	DO15
107	1N441B	200 †	75	50A	15			165A	1 5	75	25A	.75u	100m	150A	200			Si△	DO3
108	1N538	200 †	.75	50A	15			150A	1 0	.50	25A	10u	20m	150A	200			Si△	DO3
109	1N1082A	200	75	50$	35				1 0	1 0	25	10u			200			Si	F22
110	1N1647	200 †	.75	50A	15			165A	50 ∅	25	150A		30m∅	150A	200			Si	A53

SYMBOLS AND CODES EXPLAINED IN INTERPRETER

5. RECTIFIERS

IN ORDER OF (1) PIV, (2) MAX AVG FWD CURRENT (3) TEMPERATURE, and (4) TYPE No.

LINE No	4 TYPE No.	1 PIV (V)	MAX AVG FWD DC CURRENT 2 Io (A)	3 at TEMP (°C)	MAX RATINGS @ 25°C SURGE CUR. PEAK 1 Cy (A)	PULSE WIDTH (s)	DISS. (W)	MAX TEMP (°C)	MAXIMUM FORWARD VOLTAGE DROP Vf (V)	at If (A)	at TEMP (°C)	MAX. REVERSE CURRENT Ir @25°C & Vr (A)	Ir at T & Vr (A)	TEMP T (°C)	TEST VOLT Vr (V)	AVALANCHE RATINGS MAX V BKDN. (V)	MIN SLOPE (A/V)	MAT.	DESCRIPTION DWG. No.
1	1N2092	200 †	75	50A	15			100A	50 ∅	.50	85A		25m∅	85A	200			Si△	M21
2	1N2611	200	75	50A	30			175A	1 1	50	25A	10u	50m	150A	200			Si	A31a
3	1N4365	200	75	50A	35	2 0m		175	1 1	75	25	1.0u	30m	175	200			Si	DO3
4#	1S032	200	75	50A	40			150A	1 25		25A	2 0u			200			Si△	A89
5#	1S41	200	75	50A	25			150J	1 2	1 0	25A	5 0u	25m	150A	200			Si△	DO1
6#	1S101⊘	200	75	50A	40			150A	1 0		150A	10u			200			Si△	A89
7#	2G8	200	75	50A	15			150A	1 1	75	25A	750n			200			Si△	DO3
8	A3C3	200 †	75	50A	35			175A	1 1	50	25	10u△	30m⊘	150	200			Si	A84
9	D200	200	75	50	15		1 0	175	1 0	75	25	5 0u			200			Si	A50
10	DK752	200	750m	50A	60			175A	1 2	750m	25A	10u	100u	100	200			Si	DO27
11	H200	200	75	50	15		1 0	175	1 0	75	25	5 0u			200			Si	DO3
12	M69	200	75	50	50	8 3m		175	1.2		25	10u						Si	A3h
13#	P200A	200	75	50	50	10m		150	1 0	1 0	25	10u			200			Si	DO29
14#	S1S	200	75	50	48	20m	83	120	1.1	.75	50	10u			200			Si	
15	SD92A	200	75	50A	15			125A	1 3	1 2	25		50m	100	200			Si	DO3
16	SM20	200	75	50$	35			175	1 1	50	25	10u			200			Si	A84
17▼	SM20#	200	750m	50$	35			175†	1 1	500m	25	10u			200			Si	A84
18#	SW1S	200	75	50	48	20m	83	120	1 1	75	50				200			Si	
19	TK20	200	750m	50A	15			175C	1 1	500m⊘	25		300u⊘	150	200			Si	A84
20	1N1440	200	75	55A	30			150A	1.0	75	55A		1 0m	55A	200			Si	A1gz
21	1N2482	200	75	55	30			150A	1 2	75	55		1 0m	55	200			Si	A3c
22	1N2485	200	75	55A	75	4 0m		150	1 0			1 0m			200			Si	A6b
23	1N3277	200	75	70A	25	8 0m		150A	1 2	75	25	5 0u			200			Si	A1cm
24	1N2860	200	750m	75A	16			125A	1 2	500m	75A		400u∅	100A	200			Si	
25	1N3193	200	75	75A				100A	1 2	50	25A	5 0u	20m	75A	200			Si△	A50
26	1N3253	200	75	75A				100A	1 2	.50	25A	5.0u	20m	75A	200			Si△	A50a
27	1N3639	200	.75	75A	40			100	1 2	.75	25	10u			200			Si	DO13
28	CER69	200	75	75A	48	4 0m		150A	1 2	75	100	10u△	20m	100	200			Si	DO27
29	MR1337-3	200	75	75A	30 §			175A	1 1	1 0	25A		25m	25A	200			Si	A31a
30	S82	200	75	80$	15				1 2	1 2	25	20u			200			Si	A54
31	1N1557	200	75	100C				150	1 4	60	25		1 0m	100A	200			Si	DO2
32	AM020	200	75	150A				150A	1 0	25m	25A		300u⊘	150A	200			Si	DO7
33	1N1101	200	77	55A	15	8 0m		175A	1 5	12	25A		30m	150A	200			Si	DO1
34#	D28	200	80	25A	30	10m	1 0	150A	1 2	.80 †	25		15m	125A	200			Si△	A100
35	EM402	200	80	25	50				1 1	80	25	10u	20m	85A	200				A1bg
36	PE402	200	80	35A$	50			135A	1 1	80	25	10u	20m∅	85A	200			Si	A3w
37#	SR1FM4	200	800m	40A	50			130J	1 2 †§	3 0	25A	100m	300u	130J	200				A1bv
38#	1S1343	200	80	50A	40	8.3m		150J	1 2	3 0	25A	10u∅	50m∅	150J	200			Si△	A89b
39	K4C5	200	80	50	60			150C	2 0	80	25	5 0u	.50m	100C	50			Si	
40#	SR1C4	200	800m	50A	40 §	8 3m		150J	1 2	3 0	25A	10u	500u	150J	200			Si△	A34d
41#	DH4R2	200	80	55	45	8 3m		150	60 ∅	40	85		40m	85	140			Si	M152
42	1N610	200	80	100A	3 0	8 3m		150A	1 5	20	25A	25u△			200			Si	DO4
43	1N610A	200	80	100A	3 0	8 3m		150A	1 5	40	25A	1 0u△			200			Si	DO4
44	A4C1	200	85	25	60			175A	50		150	1 0u	.50m	150	200			Si	A84a
45	A4C5	200	.85	25	60			175A	50		150	5 0u	.50m	150	200			Si	A84a
46	A4C9	200	.85	25	60			175A	.50		150	10u	50m	150	200	100	200u	Si	A84a
47	B4C1	200	85	25	60			175A	50		150	1 0u	50m	150	200			Si	A1rx
48	B4C5	200	85	25	60			175A	.50		150	5 0u	50m	150	200			Si	A1rx
49	B4C9	200	85	25	60			175A	50		150	10u	50m	150	200	100	200u	Si	A1rx
50	SM120	200	85	50$	45			150	1.0	1 5	25	10u			200			Si	A84
51	SM720	200	85	50	35			125A	1 0	50	25	01u	20m	150	200			Si	A84
52	ST12⊘	200	95	55A	75	4 0m		100A	1 0			1 0m			200			Si	C23
53	NS1002	200	1 0		60	8.3m			1 2	1 0		10u			200				
54	1N3248	200	1 0	25$	20				1 1	1 0			500u	150	200			Si	A1cs
55	100R2B	200	1 0	25	60			175	2 0	1 0	25	5.0u	.50m	100	200			Si	
56#	0701	200	1 0	25	30	10m		125J	1 1	1 0	25	5 0u			200			Si	A1bu
57	A5C1	200	1 0	25	60			175A	50		150	1.0u	50m	150	200			Si	A84a
58	A5C5	200	1 0	25	60			175A	50		150	5 0u	50m	150	200			Si	A84a
59	A5C9	200	1 0	25	60			175A	.50		150	10u	50m	150	200	100	200u	Si	A84a
60	B5C1	200	1 0	25	60			175A	50		150	1.0u	.50m	150	200			Si	A1rx
61	B5C5	200	1.0	25	60			175A	50		150	5 0u	50m	150	200			Si	A1rx
62	B5C9	200	1 0	25	60			175A	50		150	10u	50m	150	200	100	200u	Si	A1rx
63	BR52†	200	1.00	25	25	8 0m		150	1 10	1.0	25	5 0u			220			Si△	M533
64	BR82B†	200	1 00	25	50	8 0m		150	1 10	1 0	25	5 0u			220			Si△	M535
65#	E21	200	1 0	25A	50	10m		150A	1 2	1 0 †	25A	1 0u	200u	125A	200			Si△	DO29
66#	GJ3M	200	1 0	25A	8 0			70J	1 0									Ge	S33
67	MB245	200	1 0	25	20	8 3m	2 0	175A	1 0	60 ⊘	25	1 0u	75u	100	200			Si	A60f
68	NPC0200	200	1 0	25	25			150A	1 1	1 0	25	30u						Si	A3n
69	S1020	200	1.0	25A	35			175A	.50 ∅	.25	150A		.50m∅	150A	200	400		Si△	A1gf
70	SD2△	200	1 0 ∅	25A	50			100A	1 0	1.0	25A	5.0u			200				A1ev
71	SLA13AB	200	1 0	25	60	8 3m		150A	1 0	1 0	25	1 0u	10m	100	200			Si	A69
72	SLA13C	200	1 0	25	60	8 3m		150A	1.1	1 0	25	5.0u	.25m	100	200			Si	A69
73	UR120∅	200	1 0	25A	25	8 3m			1 0	1 0 ⊘	25A	3 0u	50u	100A	200			Si	A146f
74	UT234	200	1 0	25A	20	8.3m	4 0	175A	1 0	40 ⊘	25A	2 0u	75u	100A	200			Si	A60
75	VE28X†	200 †	1 0	25	25	8 3m	1 0	150	1.5	1.0	25	10	10	150	200			Si△	M548
76	PE502	200	1 0	35$	60			135A	1 1	1 0	25		250m	100	200			Si	A3w
77	1N5005	200 †	1 0	40A	35 §			150A	1.3 †	1 0	40A		1.0m	40A	200			Si	DO13
78	1N5056	200 †	1 0	40A	30 §			125A	1.4 †	1 0	50A		.25m	100A	200			Si	DO29
79	1N5211	200 †	1 0	40A	50 §			175A	1 2	1 0	75A		20m	75A	200			Si	A31q
80	VE27†	200 †	1 0	40	25	8 3m		150	1 2	1 0	40	10	10	150A	200	700		Si△	M548
81	VE28†	200 †	1 0	40	25	8 3m		150	1 2	1.0	40	10	10	150A	200			Si△	M548
82#	BYX36/300	200	1 0	45A	30	10m		125A	1 2 †	1.0	25A	1.0u	.12m	125A	200			Si△	DO7
83	1B2	200	1 0	50C$	11			150C	2 0	1.0	25	2 0u	05m	100	200			Si	M79
84	1C2⊘	200	1 0	50C$	11			150C	2 0	1 0	25	2 0u	05m	100	200			Si	M116a
85	1E2	200	1 0	50A	75 §			175A	1 1	1 0	25A	2 0u	05m	100	200			Si	DO27
86	JAN1N4383	200 $	1 0	50A	50	8 3m		200A	1 2 †	3 0	25	1 0u	200u	150	200			Si	DO29
87#	1S1062	200	1 0	50A	60	10m	1 0	150A	1 0	1 5	25	10u	.10m	125	200	450		Si	A52j
88	10C2△	200 †	1 0	50A				175A	1 2 △	1 0	25A	10u						Si	A50
89	A5C2	200	1 0	50	60	8 3m		175	1 0	1 0	25	10u	50m	150	200			Si	A84
90	AA200	200	1 0	50	15		1 0	100	.90	1 0	25	5.0u			200			Si	A3p
91	BTB200	200	1 0	50	50	8 0m		150A	1 1	1 0	50	10						Si	DO27
92	BTM200	200	1 0	50	30	8 0m		150A	1.1	1 0	50	10						Si	A1ry
93	CJ2	200	1 0	50	50			150	1 1	1.0	50	5 0u	200u	100	220			Si△	DO15
94	CL2⊘	200	1 0	50A	50			150A	1.1	1.0	50A	5 0u	200u	100A	220			Si△	DO27
95	CM2	200	1 0	50	50			150	1 1	1 0	50	5 0u	200u	100	220			Si△	DO27
96	E2	200	1.0	50	75 §			175	1 1	1 0	25	2 0u	50u	100	220			Si△	DO27
97	EM2	200	1 0	50	75 §			175	1 1	1 0	25	2 0u	50u	100	220			Si△	DO41
98♦#	F14B	200	1 0	50A	45			175J	1.0	1 0	25	50u	300u	100	200			Si	A249a
99	HA200	200	1.0	50	15		1.0	175	.90	1.0	25	5.0u			200			Si	DO3
100	K5C5	200	1 0	50	60			150C	2.0	1 0	25	5 0u	50m	100C	200			Si	
101#	M9257A	200	1 0	50A				150A	1.0	1 0	25A		.50m	150A	200			Si	
102#	PA200	200	1.0	50A	50			175A	1.0	1.0	25A	5 0u		25A	200	500		Si△	DO29
103▼#	PCP2†	200	1.0	50	50			125S	2.0	1 0	25	10	100u	150	200			Si	M584
104	PF20†	200	1.0	50	50	8 3m		125	1 0	1.0	25	5 0u			200			Si	M544
105	TA200	200	1.0	50	15		1.0	100	.90	1 0	25	5 0u			200			Si	M21
106	1N152	200 ∅	1.0	55A$	25	33m		85S	.70	50	55A		1 9m	55A	200			Ge	M124
107♦	1N4245	200	1.0	55A	25	8 3m		160A	1.2	1 0	55A	1.0u	25u	125	200			Si	A1tc
108	CE502	200	1.0	55A$	50			150A	1.1	1 0	25		.10m	100	200			Si	A1cs
109	EM502	200	1.0	55A$	50			150A	1.1	1 0	25		10m	100	200			Si	A1bx
110	S12⊘	200	1.0	55A	50	8 3m		150A	1 0	1.0	25A	10u	50u	100A	200			Si	A1sd

SYMBOLS AND CODES EXPLAINED IN INTERPRETER

5. RECTIFIERS

IN ORDER OF (1) PIV, (2) MAX AVG FWD CURRENT (3) TEMPERATURE, and (4) TYPE No.

LINE No	4 TYPE No.	1 PIV (V)	MAX AVG FWD DC CURRENT 2 Io (A)	3 at TEMP (°C)	MAX RATINGS @ 25°C SURGE CUR. PEAK 1 Cy (A)	PULSE WIDTH (s)	DISS. (W)	MAX. TEMP (°C)	MAXIMUM FORWARD VOLTAGE DROP Vf (V)	at If (A)	at TEMP (°C)	MAX. REVERSE CURRENT Ir @25°C & Vr (A)	Ir at T & Vr (A)	TEMP T (°C)	TEST VOLT Vr (V)	AVALANCHE RATINGS MAX V BKDN. (V)	MIN SLOPE (A/V)	DESCRIPTION MAT.	DWG. No.
1	SC2#	200	1 0	55$	50			175	1 2	1.0	25	1.0u	50u	125	200			Si	A1bs
2	SCA2	200	1 0	55$	50			175	1 2	1.0	25	1 0u	50m	125	200			Si	A1bs
3	SCE2	200	1 0	55$	50			175S	1 0	1.0	25	1.0u	50u	125	200				A1sd
4	SEN120	200	1 0	55	50	8 3m		170A	1.0	1 0	25	5 0u	300u	150	200			Si△	DO15
5#	SH4D2	200 ∅	1 0	55A	45	8 3m		115	60 ∅	50	85		40m∅	85	140			Si	M215
6	1N3866	200	1 0	60A	10 §			200A	1 1	1.0	25	10n	5 0u	125	200			Si	A1ds
7#	BY126/200	200	1 0	60A	40	10		150J	1 5	5.0	25J	10u			300			Si	DO27
8#	1S1886	200	1 0	65A	60			150J	1 2	1 5	25A		400m	150J	200			Si	A1jw
9	1N3757	200	1 0	70A	30			150A	1 0	1 5	25	5 0u			200			Si	A1cm
10	1D2	200	1 0	75C	35			150C	2 0	1 0	50C	2.0u	05m	100C	200			Si	M116*
11	1N2860A	200 †	1 0	75A	40			135	1 2	1 0	75A		50m	135	200			Si	DO1
12♦	1N4003	200	1 0	75A	30	8 3m		175A	1.6	1.0	75A	10u	30u∅	75A	200			Si	DO41
13	1N5059	200 †	1 0	75A	50 §			175A	1 2	1 0	75A		15m	75A	200			Si	A94g
14	5A2	200	1 0	75A	50	8.3m			.95	1 0	25A	10u						Si	DO27
15	10D2	200	1 0	75A	50	8.3m			95	1.0	25A	10u						Si	DO39
16	CA102DA	200	1 0	75A	15			150A	1 2	1 0	25C		3.0m∅	125C	200			Si	A32
17	CB20#	200	1 0	75A	50	8.0m		175A	1 1	1 0	25A	2 0u	50u	100	200			Si△	A1bg
18	CC102DA	200	1 0	75A	15			150A	1 2	1.0	25C		3 0m∅	125C	200			Si	C8
19	CF102DA	200	1 0	75A	1 5			150A	1.2	1.0	25C		3.0m∅	125C	200			Si	F8
20	CP102DA	200	1 0	75A	15			150A	1 2	1 0	25C		3.0m∅	125C	200			Si	C9
21	ER183	200	1 0	75A	30 §			175J	1 1	1.0	25A	10u	50m∅	75A	200			Si	DO27
22▼	GER4003	200	1 0	75	30			175	1 1	1.0	25	100u						Si	A249b
23	HAR20	200	1 0	75A	30	8 3m	1 0	175A	1 0	1.0	25	500n	15u	100	200	500		Si	A196a
24▼	HEP156-RT	200	1 0	75$	30			175†										Si	DO41
25▼	HEP176-RT†	200	1 0	75$	32													Si	M604*
26	J2	200	1 0	75A	50	8.0m	1 0	175A	1 0	1.0	25A	5 0u	50u	100A	200			Si	DO15
27	MR2066	200	1 0	75	30	8.3m		175J	80 ∅	1.0	25	25u	50m	75	200			Si△	A1ba
28	MR2273	200	1 0	75	30	8 3m		175J	1.1	1.0	25	10u	05m	100	200			Si△	A1ba
29	1F2	200	1 0	100	50		1 0	150C	1 3	2 0	25	2 0u	50u	100	220			Si△	F22
30	1N1037	200	1 0	100A	30 §	4 0m		170C	1 5	1.0	25A	200u			200			Si	S65a
31	1N1043	200	1 0	100A	30 §	4 0m		170C	1.5	1.0	25A	200u			200			Si	S66b
32	1N1049	200	1 0	100A	30 §	4 0m		170C	1 5	1 0	25A	200u			200			Si	S68b
33	1N1552	200	1.0	100C				150	1.4	.60	25		1.0m	100A	200			Si	DO4
34	1N3189	200	1 0	100C	30	8 3m		175C	1 0	75 †	25C	5 0u	50m	150C	200			Si	A31a
35	1N4383	200 †	1 0	100A	50			175A	1 3	1 0	100		25m∅	150	200			Si	DO29
36	AM21	200 †	1 0	100C$	20 §	8.0m		125A	1 25	1 0	25C		30m∅	100C	200			Si	DO4
37	G100D	200 †	1 0	100A	70			175A										Si	A50b
38	MR200	200	1 0	100A	50	8 0m		150A	1 0	1 0	25A	2 0u	100u	100	200			Si	A1dk
39	R200	200	1 0	100	50 §	8 0u		150A	1 0	1.0 †	25	2.0u△	100u	100	200			Si	
40	SI200E	200	1 0	100A	50			150C	1 0	1.0	25A	5.0u			200			Si	DO27
41	SLA200LCD†	200	1 0	100					1 0	1.0		1.0u	100u	100	200			Si	M547
42	SM512	200	1 0	100$	45			150†	1 0	1.0	25	10u			200			Si	A84
43	1N2027	200 †	1 0	150C	25	8 3m		175C	2 0	2.0	25		50m	150C	200			Si	DO4
44♦	A50	200	1 0	150C$	25			150C	1 0	1 0	25	10u	1.0m	150C	200			Si	DO2
45	AM24	200	1 0	150C$	20 §	8 0m		175A	1 25	1 0	25C		50m	150C	200			Si	DO4
46	BY103△	200	1 0	150C$	25			150C	90	1 0	25C	4 0u	.50m	150C	200			Si	DO2
47	BY113△	200	1.0	150C$	25			150C	.80	1 0	25C	1.0u	.10m	150C	200			Si	DO2
48	BY123	200	1 0	150C$	25			150C	1.0	1.0	25	10u	1.0m	150C	200			Si	DO2
49	E1C3	200	1 0	150	200			175	1 3	1 0	150	10u	1 0m	150	200			Si	DO4
50#	SD92S	200	1 1	40A	40	10m		170A	1 0	60	25A	50u	200m	150A	200			Si△	DO3
51	HC69F	200	1 1	50A	50	8.0m		175A	1.2	1.1	25	10u			200			Si	F29
52	MH69	200	1 1	50	50	8 3m		175	1 2		25	10u						Si	A3h
53	HC69	200	1 1	75A	75	4 0m		150A	1 2	1 1	100	10u△	20m	100	200			Si	DO27
54	A6C1	200	1 2	25	60			175A	50		150	1.0u	.50m	150	200			Si	A84a
55	A6C5	200	1 2	25	60			175A	.50		150	5 0u	50m	150	200			Si	A84a
56	A6C9	200	1 2	25	60			175A	.50		150	10u	50m	150	200	100	200u	Si	A84a
57	B6C1	200	1 2	25	60			175A	.50		150	1.0u	.50m	150	200			Si	A1rx
58	B6C5	200	1 2	25	60			175A	50		150	5.0u	50m	150	200			Si	A1rx
59	B6C9	200	1 2	25	60			175A	.50		150	10u	.50m	150	200	100	200u	Si	A1rx
60#	DD2323	200 †	1 2	25A	45			150A	1 0	1 0	25	1.0u	20m	150A	200			Si△	A31k
61	S229	200	1 2	25$	45				1.75	2.0	25	200u			200			Si	A54
62	K6C5	200	1 2	50	60			150C	2 0	1.2	25	5.0u	50m	100C	200			Si	
63	TM22	200	1 25	25C				125C	2 0	.80	25		30m∅	100C	200			Si	S145
64	UT242	200	1 25	25A	20	8 3m	4 0	175A	1 0	50 ∅	25A	2 0u	75u	100A	200			Si	A60
65#	F21	200	1 3	25A	70	10m		150A†	1 2	1 3 †	25		.20m	125A	200			Si△	DO13
66	RA132DA	200	1 3	55A$	60			150A	1.2	1 3	25		30m∅	150	200			Si	A34
67	1N1909	200 ∅	1 5	25A	30	16m	2 0	250	1 0	1 0	25	10u			200			Si△	A86
68	1N2291	200	1.5	25	100			150	60	1.5	25		50m	150	200			Si△	S35
69	1N2641	200	1 5	25A	15	8 3m		165A	1 3	1 5	25A	300u			200			Si	M124
70#	1S021	200	1.5	25A	125			150A	1 25	5 0	25A		05m	100C	200			Si△	A89
71#	1S152	200	1 5	25A	15			140	1 3 △	1 0		5 0u△			200			Si*	S42
72	150R2B	200	1 5	25	60			175	2 0	1 5	25	5 0u	50m	100	200			Si	
73	A7C1	200	1.5	25	60			175A	.50		150	1.0u	.50m	150	200			Si	A84a
74	A7C5	200	1 5	25	60			175A	50		150	5.0u	50m	150	200			Si	A84a
75	A7C9	200	1.5	25	60			175A	.50		150	10u	.50m	150	200	100	200u	Si	A84a
76	A121-2†	200	1 50	25	25	8.0m		150	1.10	1 0	25	5.0u			220			Si△	M531
77	A132-2†	200	1 50	25	50	8.0m		150	1 10	1.0	25	5 0u			220			Si△	M532
78	A168-2†	200	1.5	25	50	8 0m		125	1.1	1 0	25	5.0u			240			Si	M575
79	B7C1	200	1 5	25	60			175A	50		150	1 0u	50m	150	200			Si	A1rx
80	B7C5	200	1.5	25	60			175A	.50		150	5.0u	50m	150	200			Si	A1rx
81	B7C9	200	1.5	25	60			175A	.50		150	10u	.50m	150	200	100	200u	Si	A1rx
82	BR82D†	200	1 50	25	50	8 0m		150	1.10	1 0	25	5 0u			220			Si△	M536
83	CODI5324	200	1 5	25$	35			150	1.1	.80	25	1 0u			200			Si	M45
84	M1C1	200	1.5	25	250			175A	50		150	2.0u	5 0m	150	200			Si	A1ep
85	M1C5	200	1 5	25	250			175A	50		150	10u	5 0m	150	200			Si	A1ep
86	M1C9	200	1 5	25	250			175A	.50		150	10u	5.0m	150	200	100	200u	Si	A1ep
87	MB237	200	1 5	25	25	8.3m	2 0	175A	1.0	80 ∅	25	200n	15u	100	200			Si	A60f
88	S236	200	1 5	25$	55				1 75	2 5	25	200u			200			Si	A54
89#	SA2M1	200	1 5	25A	47		2 0	150A	2 0	10	25J	10u	300u	150J	200	250 ∅		Si△	DO27
90	SI2	200	1 5	25A	80			150C	1 0	1.5	25A	1.0u			200			Si	A1bc
91	UT252	200	1 5	25A	25	8.3m		175A	1.0	75 ∅	25A	2 0u	75u	100A	200			Si	A60
92#	ZR12	200	1 5	25A	80	10m		150A	1.0	1 5	25A	5.0u	20m	100A	200			Si	A6a
93#	ZR12T	200	1 5	25A	80	10m		150A	1.0	1 5	25A	5.0u	20m	100A	200			Si	S164
94#	ZS272	200	1 5	25A	70 §			150A	1 2	1 5	25A	5 0u	150u	100A	200			Si	A52f
95#	BYX22-200	200	1.5	30A	55	8 3m		150A	2 4	15	25A	2.0u	120u	125A	200			Si	A163
96	SCBR2	200	1 5	30C	20			150										Si	M45a*
97#	SL203M	200	1.5	30A	30	2 0m		125C	1.34	7.5	25A	5 0u	110u	100C	200			Si△	S33
98	1N4818	200 †	1 5	40	50			170	1.3	1.5	40		.25m	40	200			Si	DO27
99#	1S921∅	200	1 5	40A	80	10m		150J	1.05 △	1.5	25A		.80m	150J	200			Si△	A56
100#	S2A20	200	1 5	40A	80	10m		150J	1.05 △	1 5	25A		.80m	25A	200			Si△	A56
101#	S3M1	200	1 5	40A	47		2 0	170A				10u	300u	150	200			Si△	DO27
102#	1S1072	200	1 5	50A	60	10m	1 0	150A	1.0	1 5	25	10u	.10m	125	200	450		Si	A52j
103	1 5E2	200	1 5	50A	75 §			175A	1 1	1 5	25A	2 0u	50u	100	220			Si△	DO27
104	1 5J2	200	1 5	50	75 §			175	1 1	1 5	25A	2 0u	50u	100	220			Si△	DO15
105	DRS102	200	1 5	50A	50 §	8 3m		125A	1.0	1 0	25A	10u	200u	125A	200			Si	A168c
106	K7C5	200	1.5	50	60			150C	2.0	1 5	25	5 0u	50m	100	200			Si	
107	P100D	200	1 5	50	50	8 0m	1 0	170	1.0	1.0	25	5.0u						Si	DO27
108	P150D	200	1 5	50	50	8.3m	1 0	150	1 0	1.0	25	5 0u							DO27
109#	SE1 5S	200	1 5	50	63	20m	1 6	120	1 1	1.5	50	10u			200			Si	M99
110	1N1564	200	1.5	55A	70	8 3m		175A	1 2	.50	25A	5 0u	50m	100	200			Si△	C12

SYMBOLS AND CODES EXPLAINED IN INTERPRETER

5. RECTIFIERS

IN ORDER OF (1) PIV, (2) MAX AVG FWD CURRENT (3) TEMPERATURE, and (4) TYPE No.

LINE No	4 TYPE No.	1 PIV (V)	MAX AVG FWD DC CURRENT 2 Io (A)	3 at TEMP (°C)	MAX RATINGS @ 25°C SURGE CUR. PEAK 1 Cy (A)	PULSE WIDTH (s)	DISS. (W)	MAX. TEMP (°C)	MAXIMUM FORWARD VOLTAGE DROP Vf (V)	at If (A)	at TEMP (°C)	MAX. REVERSE CURRENT Ir @25°C & Vr (A)	Ir at T & Vr (A)	TEMP T (°C)	TEST VOLT Vr (V)	AVALANCHE RATINGS MAX V BKDN. (V)	MIN SLOPE (A/V)	MAT.	DESCRIPTION DWG No.
1	1N2392	200	1 5	55A	35			150A	1 2	1 5	25		30m∅	150A	200			Si	A32
2	1N2401	200	1 5	55A	35			150A	1 2	1 5	25		30m∅	150A	200			Si	C8
3	1N2410	200	1 5	55A	35			150A	1.2	1 5	25		.30m∅	150A	200			Si	C9
4	1N2419	200	1 5	55A	35			150A	1 2	1 5	25		30m∅	150A	200			Si	F8
5▼#	1S1850	200	1 5	60A	50	10m		120J	900m	750m	25A	10u			200			Si	M594c⊘
6▼#	SA2Z	200	1 5	60A	100	10m		140J	930m	1.5	25A	10u			200			Si	A268
7	1N5393	200	1 5	70C	50 §			170C	1 4	1 5	70C		30m	150	200			Si	DO15
8	1N2848	200 †	1 5	75C	15			165A	65 ∅	50	150C		30m∅	150C	200			Si*	S35
9▼	CTN200	200	1 5	75	50			175A	1.0			10u			200			Si	M594*
10▼	CTP200	200	1 5	75	50			175A	1 0			10u			200			Si	M594a*
11▼	VB200	200	1.5	75	50			175A	1 0			10u			200			Si	M594b*
12	1N1116	200 †	1.5	85C	15			170A	65 ∅	1 5	150		30m∅	150	200			Si	DO4
13	1N1055	200	1.5	100A	60 §	4 0m		150A	1 5	1 5	25A	1 0m			200			Si	A167v
14	1N1086	200	1 5	100A	60 §	4 0m		150A	1.5	1 5	25A	2 0m			200			Si	F22h
15	1N1451	200	1 5	100C$				190J	1.0	2 4	150C		5 0m	25C	200			Si	S41a
16	1N1618	200	1 5	100A$	100	4 0m		100A	1 2	1 5	25		5 0m	25	200			Si	A52
17#	1WS2	200	1 5	100C	25 §	10m		125J	1 5	5 0	100C		1 5m	125J	200			Si*	A19a
18	20F1	200	1 5	100				175J	1 0	2 4	25C		10m	25C	200			Si	S41a
19	1N1447	200	1 5	120C				175J	1 3	1 8	25A		2 0m	25C	200			Si	S41b
20	1N1230B	200	1 6	50$	30				1 2	1 0	25	10u	.30m	150	200			Si	S25a
21	S1220	200	1.6	120C	35		15 ∅⊘	175J	1 0 ∅	1 0	25A		10m∅	100C	200	1.8k		Si△	DO13△
22	1N1220	200	1 6	135C	20			175J	1.5	2 5	25J	500u	1.5m	150J	200			Si	DO1
23	1N1230	200	1.6	135C	20			175J	1.5	2 5	25J	500u	1 5m	150J	200			Si	S25
24	1N1220B	200 †	1 6	140C	25			175$	1 7	1.3	25	300u∅	10m△	25	200			Si	DO1
25	1N1230A	200	1 6	140C	20			175J	1 5	2 5	25J	50u	.50m	150J	200			Si	S25
26	1N1540	200	1 6	140C	20			175J	1.5	2 5	25J	50u	50m	150J	200			Si	DO4
27	1N1220A	200	1 6	175J$	20			175J	1.5	2 5	25J	50u	50m	150J	200			Si	DO1
28	MDA922-4†	200 †	1 8	55A	100			175J	1 1	750m	25J	20u			200			Si△	M535a
29#	10B2	200	1 8	125B	40	10m		175A	1 1	3 0	25A	50u	50m	150A	200			Si△	DO1
30	NS2002	200	2 0		200	8 3m			1 2	2 0		25u			200				
31	1N3611	200 §	2.0	25A	20		4 0	200A	1 0	75	25A	10u	30m	150A	200			Si	A60
32	1N3938	200	2 0	25A	60	1 0m	1 8	175A	1 1	6 0	25A	5.0u△	50m	150A	200	500	15u△	Si△	DO13
33	200R2B	200	2 0	25	60			175	2 0	2 0	25	5 0u	50m	100	200			Si	
34	AB200	200	2 0	25	15		3 0	100	1.25	1 0	25	5 0u			200			Si	A3q
35	BR72A†	200	2 00	25	25	8 0m		150	1 20	1 0	25	5 0u			220			Si△	M534
36#	F22	200	2 0	25A	70	10m	3 0	150A†	1.2	2 0 †	25		20m	125A	200			Si△	DO13
37	GR18	200	2.0	25	20			125	1.1	1 0	25	10u	30m	150	200			Si	A1ry
38	M2C1	200	2.0	25	250			175A	50		150	2 0u	5 0m	150	200			Si	A1ep
39	M2C5	200	2 0	25	250			175A	.50		150	10u	5.0m	150	200			Si	A1ep
40	M2C9	200	2 0	25	250			175A	50		150	10u	5 0m	150	200	100	200u	Si	A1ep
41	MB229	200	2 0	25	25	8 3m	2 0	175A	1.0 △	1 0 ⊘	25	25n	5 0u	100	200			Si	A60f
42	S35⊘	200	2 0	25$	20				1 2	3 0	25	100u			200			Si	S48
43	SEN2A2†	200	2 0	25	30	8 3m		150A	1.2	1 0		10u	100u	100	200			Si	M79b
44	SEN220	200	2 0	25	150	8 3m		170A	1.2	2 0	50		25u	50	200			Si△	DO27
45	SLA23A	200	2 0	25	80	8 3m		150A	95	2 0	25	1 0u	10m	100	200			Si	A69
46	SLA23B	200	2 0	25	80	8 3m		150A	1.0	2 0	25	1 0u	10m	100	200			Si	A69
47	SLA23C	200	2 0	25	80	8 3m		150A	1 0	2 0	25	5 0u	25m	100	200			Si	A69
48	UR220∅	200	2.0	25A	40	8 3m			1.0	2 0 ⊘	25A	3 0u	05m	100A	200			Si	A146f
49	UT262	200	2 0	25A	30	8 3m		175A	1.0	90 ⊘	25A	2 0u	75u	100A	200			Si	A60
50	UT2020	200	2 0	25A	60	8 3m		175A	1.0	1 0 ⊘		5 0u	10m	100A	200			Si	A146m
51	VS248X†	200 †	2 0	25	35	8 3m		150	1 5	2 0	25	10	10	150	200			Si△	M532a
52#	SR3AM4	200	2 0	40A	150 §	8 3m		150J	1.1	10	25A	100u	1 0m	150J	200			Si△	A1fn
53	VS247†	200 †	2.0	40	8 0	8 3m		150	1 2	2 0	25	10	10	150	200	700		Si△	M532a
54	VS248†	200 †	2.0	40	8 0	8 3m		150	1 2	2.0	25	10	10	150	200			Si△	M532a
55	1N4517	200	2 0	50A	100 §			175A	1 2	2 0	50A		1.0m	175A	200			Si	A52c
56	20A2	200	2 0	50	50			170A	1.3	2 0	50	10u	25m	50	200			Si	DO27
57	A1423BC1AB1	200	2 0	50A				150A	900m	100m	25A	5 0u	100u	150A	200			Si	M205h
58	B172-20	200	2 0	50	60			150C	2.0	2 0	25	5.0u	50m	100	200			Si	
59	BFW200†	200	2 0	50A	50			100C	1.1	1.0	25A								M40a
60▼	FW200†	200	2 0	50A	50			125A	900m	1.0	25A	5 0u						Si	M40a
61	K8C5	200	2 0	50	60			150C	2.0	2 0	25	5 0u	50m	100	200			Si	
62▼#	MCP2†	200	2 0	50	50			125S				10u	100u	125	200			Si	S349
63	PD20	200	2 0	50A	50			125A	90	1 0	25A	5 0u						Si	M40a*
64	SI2A	200	2 0	50A	80			150C	1 0	3.0	25A	1 0u			200			Si	A1bc
65	BH4R2†	200	2 0	55	45	8 3m		115	1 2 ∅	1 0	85		800u∅	85	140			Si	M151
66	2F2	200	2 0	75C	50			150C	1 3	2 0	25C	2 0u	50u	100C	220			Si△	F22
67	HB200	200	2 0	75A	200			175C	1 0	2 0	25A	5 0u			200			Si	A179b
68	1N1086A	200	2 0	100A	100	4 0m		100A				25n			200			Si	F42
69	FB200†	200	2 0	100	50 §	8 0m		150A	1 0	1 0	25	10u†						Si△	M79a
70#	1S1352	200	2 0	124C	40	8 3m		150J	1 2	3 0	25A	10u∅	500u∅	150J	200			Si△	S48c
71#	SR2B4	200	2 0	124C	60			150J	1 2 †§	3 0	25C	10u	500u	150J	200				S157a
72	40267	200	2 0	150C	35	2 0m		110A	3 0	15	25A	10u			200			Si△	DO1
73#	PSL12A	200 #	2 4	25A	18	10m		150A	80	15	25C		2.5m	100C	100			Si	S225
74	250R2B	200	2 5	25	250			175	2 0	2 5	25	5 0u	1 0m	100	200			Si	
75	M3C1	200	2 5	25	250			175A	50		150	2 0u	5 0m	150	200			Si	A1ep
76	M3C5	200	2 5	25	250			175A	50		150	10u	5.0m	150	200			Si	A1ep
77	M3C9	200	2 5	25	250			175A	50		150	10u	5.0m	150	200	100	200u	Si	A1ep
78#	SL203F	200	2 5	30A	30	2 0m		150C	1 05	7 5	25A	5 0u	110u	100C	200			Si△	DO1
79#	0242	200	2 5	45	100	10m		150J	1 5	7 8	25	5 0u			150			Si	S87e
80▼#	SG5F	200	2 5	60A	250	10m		150J	1.1	10	25A	100u			200			Si	M610
81#	SJ203F	200 †	2 5	100A	30			150A	1 0	.75	25A	10u	.30m	150A	200			Si△	DO3
82#	BYX38/300	200	2 5	125B	38 §	10m		150J	1 7	5 0	25J	10u	.20m	125J	200			Si△	DO4⊘
83#	BYX38/300R	200	2 5	125B	38 §	10		150J	1 7	5 0	25J	10u	200u	125J	200			Si△	DO4
84	1N2526	200	2 5	150C$	50			150C	1 2	4 0	25C	4 0u	50m	150C	200			Si△	DO10
85	1N2537	200	2 5	150C$	50			150C	1 0	4 0	25C	1 0u	10m	150C	200			Si△	DO10
86	1N2548	200	2 5	150C$	50			150C	1 5	4 0	25C	10u	1 0m	150C	200			Si△	DO10
87	BY203	200	2 5	150C$	50			150C	1 2	2.5	25C	4 0u	50m	150C	200			Si△	DO4
88	BY213	200	2 5	150C$	50			150C	1 0	2 5	25C	1.0u	10m	150C	200			Si△	DO4
89	BY223	200	2 5	150C$	50			150C	1 5	2 5	25C	10u	1 0m	150C	200			Si△	DO4
90	BY303	200	2 5	150C$	50			150C	1 2	2 5	25C	4 0u	50m	150C	200			Si	S35
91	BY313	200	2 5	150C$	50			150C	1 0	2 5	25C	1 0u	10m	150C	200			Si	S35
92	BY323	200	2 5	150C$	50			150C	1 5	2 5	25C	10u	1.0m	150C	200			Si	S35
93	MA20	200	2 5	150B	30			190B	1 0 △	2 5	150B	15u△						Si△	DO4
94	TM21	200	2 7	25C				125C	2 0	2.0	25		30m⊘	100	200			Si	S145
95	NS3002	200	3 0		300	8 3m			1 2	3 0		25u			200				
96	1N2705	200	3 0	25A	15	8 3m		165A	1 3	3 0	25A	200u			200			Si	M125
97	1N2728	200	3 0	25A	15	8 3m		165A	1 3	3 0	25A	300u			200			Si	M126a
98	1N2753	200	3 0	25A	15	8 3m		165A	1 3	3 0	25A	300u			200			Si	M126a
99	1N3981	200	3 0	25A	30		4 0	200A	1 0	90	25A	10u	10m	100	200			Si	A60
100	3AF2	200	3 0	25A	150			150C	1 2	3 0	25A	300u			200			Si	A222
101	300R2B	200	3 0	25	250			175	2 0	3 0	25	5 0u	1.0m	100	200			Si	
102	AC200	200	3 0	25A	50			150C	1 0	3 0	25A	5 0u			200			Si	A1ey
103	BR82A†	200	3 0	25	50	8 0m		150	1 2	1 5	25	5 0u			220			Si△	M534
104▼	HEP162-RT	200	3.0	25$	300			175†										Si	A179
105▼	HEPR0082-RT	200	3 0	25$	300			175†										Si	M603
106▼	HEPR0092-RT	200	3 0	25$	300			175†										Si	A179
107	M4C1	200	3 0	25	250			175A	50		150	2 0u	5 0m	150	200			Si	A1ep
108	M4C5	200	3 0	25	250			175A	50		150	10u	5 0m	150	200			Si	A1ep
109	M4C9	200	3.0	25	250			175A	50		150	10u	5 0m	150	200	100	200u	Si	A1ep
110	UT3020	200	3 0	25A	80	8 3m		175A	1 0	2 0 ⊘		5 0u	10m	100A	200			Si	A146m

SYMBOLS AND CODES EXPLAINED IN INTERPRETER

5. RECTIFIERS

IN ORDER OF (1) PIV, (2) MAX AVG FWD CURRENT (3) TEMPERATURE, and (4) TYPE No.

LINE No.	4 TYPE No.	1 PIV (V)	MAX AVG FWD DC CURRENT 2 Io (A)	3 at TEMP (°C)	MAX RATINGS @ 25°C SURGE CUR PEAK 1 Cy (A)	PULSE WIDTH (s)	DISS. (W)	MAX. TEMP (°C)	MAXIMUM FORWARD VOLTAGE DROP Vf (V)	at If (A)	at TEMP (°C)	MAX. REVERSE CURRENT Ir @25°C & Vr (A)	Ir at T & Vr (A)	TEMP T (°C)	TEST VOLT Vr (V)	AVALANCHE RATINGS MAX V BKDN. (V)	MIN SLOPE (A/V)	MAT.	DESCRIPTION DWG. No.
1	3BR2†	200	3.00	30	20	8.0m		125C											M530
2	1N4999	200 †	3 0	40A	300 §			175A	1.0 †	3.0	75A		2.0m	175A	200			Si	M176a
3	1N1124	200	3 0	50A	25 §			150A	1.1	1.0	25A		.30m⊠	150A	200			Si△	DO4
4	1N4141	200	3 0	50A	300	8 3m		175A	1.0	3.0	50A		100u	50A	200			Si	DO7
5	A138-2†	200	3.0	50	50	8 0m		150	1 1	3 0	25	5 0u			240			Si	M79c
6	CH302DA	200	3.0	50A	15			150A	1.2	1.0	25C		3.0m∅	125C	200			Si	S152a
7	CK302DA	200	3.0	50A	15			150A	1 2	1.0	25C		3.0m∅	125C	200			Si	S153
8	CS302DA	200	3.0	50A	15			150A	1 2	1.0	25C		3.0m∅	125C	200			Si	S152
9	HAB020	200	3 0	50	300	8.3m		150A	1.1	3.0	25	5.0u	150u	100	200			Si	A1ez
10	S3A2	200	3 0	50A	300			150C	1 0	3.0	25A	1 0u			200			Si	A1ez
11#	S8-02	200	3 0	50	200	10m		150	1.1	8 0	25	50u			200			Si	S19m
12	1N5199	200	3 0	55A	300 §	8 3m		175A	1 0	3.0	55A		7 6 △	175A	200			Si	A1rv
13	JAN1N5199	200	3.0	55A	300			175A	1 0	3.0	25	5 0u	.12m	100	200			Si	A1et
14	3S2E	200	3 0	55$	250			150A	95 △	3.0	100A	10u	100u	100	200			Si	A1rv
15	SLA5199	200	3 0	55	300			175	1.0	3.0	25	5.0u	.12m	100	200			SL	A31a
16	1N4721	200	3.0	75A	300			175A	1.0	3.0	75		2.0m	175	200			Si	A179a⊠
17	HC200	200	3 0	75	300		3 0	175	1.0	1 0	25		1.0m	25	200			Si	A179
18	MR2071	200	3 0	75	300	8.3m		175J	50 ∅	3.0	75	1.0m	3.0m	75	200			Si△	A179a
19	MR2371	200	3 0	75	300	8 3m		175J	1 0	3.0	25	1 0m	3.0m	75	200			Si△	M173
20	S52△	200	3 0	80$	20				1 3	5 0	25	100u			200			Si	S48
21#	S2BR2	200 %	3 0	95B	53			130B	55 ∅	1 5	25		2.0m	125	200			Si	S81
22	3E2	200	3 0	100	200	8 0m	3 0	175	1 2	3.0	100	10u	100u	50	220			Si△	A1ec
23#	FD23	200	3.0	100C	70	10m		150C	1.4	10	25C		300u	125C	200			Si△	DO13
24	HR200	200	3 0	100	300 §	8 0u		150A	1.0	3 0 †	25	5.0u△	250u	100	200			Si	A1sm
25	1N5402	200	3.0	105C	200 §			170C	1 2	3 0	105C		50m	150C	200			Si	A3q
26	SEN320	200	3 0	105C	200	8 3m		170A	1 2	3 0	25	5 0u	500u	150	200			Si△	DO27
27#	1S411	200	3 0	125S	33			150S	1 6	10	25S	5.0u	300u	150	200			Si	S61△
28#	1S432	200	3 0	125B				150	1.6		25	5.0u			200			Si△	A89
29	30S2	200	3.0	125	150 §			175J	1 0 †	3 0	25	5 0u	300u	125	200			Si	A1ed
30#	D2003	200	3.0	125B$	35			125B	1 5	3.0	25		30m	125B	200			Si△	S4c
31	S411	200	3 0	125A				150A	1.6	10	25A	5.0u	.30m	150	200			Si△	S24c⊠
32#	3F20	200	3.0	140B	40	10m		175A	1 0	1.0	25A	50u	50m	150A	200			Si	DO4
33	1N1583	200	3 0	150C				175B	1 5	6 0	25C		50m⊠	150	200			Si	DO4
34	E2C3	200	3 0	150	200			175	1 3	3 0	150	10u	1.0m	150	200			Si	DO4
35#	S2M3	200 %	3 0	150J	180			150J	1 2	3 0			500u		200			Si△	A52d
36	1N1576	200	3 5	25C$	70			150C	1.2	3 5	25A	5 0u	50m	125A	200			Si△	S175
37	350R2B	200	3 5	25	250			175	2.0	3 5	25	5 0u	1.0m	100	200			Si	
38	1N3570	200	3 5	85B	35			165A	.50 ∅	2 5	150A		40m	150A	200			Si	DO4
39	1N2673	200	3 6	25A	15	8 3m		165A	1.3	3.6	25A	300u			200			Si	M126a
40	1N2742	200	3.6	25A	15	8 3m		165A	1.3	3.6	25A	300u			200			Si	M126c
41	400R2B	200	4 0	25	250			175	2 0	4 0	25	5 0u	1 0m	100	200			Si	
42#	G2004	200	4 0	25A	100	10m	4 5	150A	1.2	4.0 †	25		3.0m	125C	200			Si△	DO4
43#	P2004	200	4 0	25A	100	10m	4 5	150A	1 2	4 0 †	25		3.0m	125C	200			Si△	S95a
44#	SJ204F	200 †	4 0	25A	15			200A	1 0	75	25A	10u	1.5m	200A	200			Si△	DO3
45	UT4020	200	4.0	25A	100	8.3m		175A	1.0	3.0 ⊠		5 0u	10m	100A	200			Si	A146m
46	1N2513	200	4.0	30C	30			165	1.1	1.5	25	2.0u			200			Si△	DO4△
47	1N2519	200	4 0	30C	25			150C				2.0u	.25m	150C	200			Si△	S117
48	4F2	200	4 0	75	300	8.0m	3 0	175B	1.3	4.0	25	100u	500u	100	220			Si△	F22
49	450R2B	200	4.5	25	250			175	2.0	4.5	25	5 0u	1.0m	100	200			Si	
50	MR20	200	4.5	150B	70			185B	1.0 △	4.5	150B	20u△						Si△	DO4
51	1N1614	200	5 0					175A	1.5	10	25A							Si	DO4
52	1N2230	200	5 0	25$	20			150	60	1.5	25		500u	150	200			Si△	DO4
53	1N2230A	200	5 0	25$	100			150	.60	5 0	25		350u	150	200			Si△	DO4
54	1N2231	200	5.0	25$	20			150	.60	1.5	25		500u	150	200			Si△	S35
55	1N2231A	200	5 0	25$	100			150	.60	5.0	25		350u	150	200			Si△	S35
56#	1S751	200	5 0	25A	30			85J	.75	5 0	25A	5 0m		25A	200			Ge	C63
57	500R2B	200	5 0	25	250			175	2.0	5.0	25	5 0u	1.0m	100	200			Si	
58	5BR2†	200	5 00	30	35	8.0m		125C											M530
59▼#	5PM2†	200	5.0	50	125			150J	2.0	5.0			50u	150	200			Si	M585
60	S5A2	200	5.0	50A	300			150C	1.1	5 0	25A	1.0u			200			Si	A1ez
61#	S20-02	200	5 0	50	600	10m		150	1.1	60	25	50u		25	200			Si	S19p
62	1N1061	200	5 0	100A	60 §	4.0m		170C	1 5	5 0	25A	1 0m			200			Si	S67a
63	1N1067	200	5 0	100A	60 §	4 0m		170C	1.5	5 0	25A	1.0m			200			Si	S66c
64	1N1073	200	5 0	100A	60 §	4 0m		170C	1.5	5.0	25A	1.0m			200			Si	S68c
65	1N1090	200	5 0	100A	60 §	4 0m		170C	1.5	5.0	25A	2.0m			200			Si	F22h
66	1N1090A	200	5 0	100A					1 5	5.0	100A		5.0m	100A	200			Si	F73
67	20F5	200	5 0	100				175J	1.1	13	25C		10m	25A	200			Si	S41a
68#	SJ203E,K	200 †	5 0	100C	30		3 0	150A	1 0	75	25C	10u	.30m	150C	200			Si△	DO4⊠
69	VRE200X	200	5 0	100	75	8 3m		150	1 5	10	25	2.0	5 0	150	200			Si△	M249*
70	VRF200X	200	5 0	100	75	8.3m		150	1 5	10	25	2.0	5.0	150	200			Si△	M249*
71	VRG200X	200	5 0	100	75	8 3m		150	1.5	10	25	2 0	5.0	150	200			Si△	M249*
72	366D	200 †	5.0	145C	100			180J	1.1	5.0	25C		10m	180	200			Si	S27
73	1N1614A	200	5 0	150C	150			190J	1 1	6.0	25		.50m	150	200			Si△	DO4△
74	407D	200	5 0	150C	125	8 3m		175J	1 1	5.0	25C		2 0m⊠	175J	200			Si	DO4
75	E3C3	200	5 0	150	200			175	1 3	5.0	150	10u	1 0m	150	200			Si	DO4
76	F1C3	200	5.0	150C	200			175J	1.3	30	25C		1.0m	150C	200			Si	DO5
77	550R2B	200	5 5	25	250			175	2 0	5.5	25	5 0u	1.0m	100	200			Si	
78	NS6002	200	6 0		300	8 3m			1 2	6 0		25u			200				
79#	1S689	200	6 0	25A	25			91S	60	5.0	25A							Ge*	C63b
80	6A200	200	6 0	25	300	8 0m		175	1.2	6.0	25	25u						Si	S19f
81	600R2B	200	6 0	25	250			175	2 0	6.0	25	5.0u	1.0m	100	200			Si	
82	BR92A†	200	6 0	25	150	8 0m		150	1 2	3.0	25	10u			220			Si△	M537
83#	G2006	200	6 0	25A	140	10m	8 0	150A	1 2	6.0 †	25		3.0m	125C	200			Si△	DO4
84#	MA103	200 #	6 0	25$	25			75					10m	25	25			Ge*	C24
85#	P2006	200	6.0	25A	140	10m	8 0	150A	1 2	6.0 †	25		3.0m	125C	200			Si△	S95a
86	SLA200†	200	6 0	25				150A				1.0u	75u	100	200				M545
87#	42R2	200	6 0	75A	75 §	10m		150C	1.2	6.0	25C		2 5m	150C	200			Si△	DO4⊠
88	VH247†	200 †	6 0	80	25	8 3m		150	1.2	6.0	25	10	10	150A	200	700		Si△	M532a
89	VH248†	200 †	6 0	80	25	8 3m		150	1.2	6.0	25	10	10	150A	200			Si△	M532a
90#	6F20	200	6 0	100A	120 §	10m		190J	65	6.0	100B		2.5m	100B	200			Si△	DO4⊠
91#	BYX50-200	200	6.0	110B	80 §	10m		150J	1 95	20	25J		1 4m	125J	200			Si	DO4⊠
92#	S2AN6	200 %	6 0	125B	125		6 5	150J	470m∅	6.0 †			2 0m	125B				Si△	DO4⊠
93#	S6-203K	200	6 0	125C	130	10m		150J	1 5	32	25A	20u	500u	150C	200			Si△	DO4⊠
94	1N1344	200	6 0	150C	66		9 5	190J	1.2	10	25J		10m	25	200			Si	S26
95	1N1344A	200 †	6 0	150B$	150			200J	.64 ∅	6.0	150B		2 0m∅	150B	200			Si*	DO4
96	1N1344B	200	6 0	150C	150			190J	1 1	6.0			02m	25C	200			Si△	DO4△
97	1N2149	200	6 0	150C$	150			150	1.2	10	25	4 0u	50m	150A	200			Si	DO10
98	1N2149A	200	6 0	150C$	150			150	1 0	10	25	1.0u	10m	150	200			Si	DO10
99	1N2493	200	6 0	150C				190J	1 1	6 0	25		2 0m⊠	150C	200			Si	DO4
100	1N2567	200	6.0	150C$	150			150C	1 5	10	25C	10u	1 0m	150C	200			Si△	DO10
101	BY403	200	6 0	150C$	150			150C	1.2	6 0	25C	4 0u	500u	150C	200			Si	S35
102	BY413	200	6 0	150C$	150			150C	1 0	6 0	25C	1.0u	.10m	150C	200			Si	S35
103	BY423	200	6 0	150C$	150			150C	1 5	6.0	25C	10u	1.0m	150C	200			Si	S35
104	BY703	200	6 0	150C$	150			150C	1 2	6.0	25C	4 0u	50m	150C	200			Si△	DO4
105	BY713	200	6 0	150C$	150			150C	1.0	6 0	25C	1 0u	10m	150C	200			Si△	DO4
106	BY723	200	6 0	150C$	150			150C	1 5	6.0	25C	10u	1.0m	150C	200			Si△	DO4
107	E4C3	200	6 0	150	200			175	1 3	6 0	150	10u	1 0m	150	200			Si	DO4
108	KR602DA	200	6.0	150S$	75			175S	1 2	6.0	150S		1 0m	150S	200			Si	DO10
109	1N1614R	200	7 0	150B	150			190A	700m	1 0	190J	10u	1.0m	190J	200			Si	DO4
110	1N2694	200	7 2	25A	15	8 3m		165A	1.3	7.2	25A	300u			200			Si	M126e

SYMBOLS AND CODES EXPLAINED IN INTERPRETER

5. RECTIFIERS

IN ORDER OF (1) PIV, (2) MAX AVG FWD CURRENT (3) TEMPERATURE, and (4) TYPE No.

LINE No.	4 TYPE No.	1 PIV (V)	MAX AVG FWD DC CURRENT 2 Io (A)	3 at TEMP (°C)	MAX RATINGS @ 25°C SURGE CUR. PEAK 1 Cy (A)	PULSE WIDTH (s)	DISS. (W)	MAX. TEMP (°C)	MAXIMUM FORWARD VOLTAGE DROP Vf (V)	at If (A)	at TEMP (°C)	MAX. REVERSE CURRENT Ir @25°C & Vr (A)	Ir at T & Vr (A)	TEMP T (°C)	TEST VOLT Vr (V)	AVALANCHE RATINGS MAX V BKDN. (V)	MIN SLOPE (A/V)	MAT.	DESCRIPTION DWG. No.
1	UT5120	200	7.5	100C	150	8.3m		175A	1.0	5 0 ⊘	25	10u	30m	100	200			Si	S277⊘
2	MS20⊘	200	7.5	150B	140			185B	1 0 △	7.5	150B	20u△						Si△	DO4
3#	ZR22	200	8.0	25A	80	10m		150A	1 2	5.0	25A	5 0u	.20m	100A	200			Si	S235
4#	ZR202	200	8.0	25A$	160	1 0m		150	1 2	5 0	25A	5 0u	200u	100A	200			Si△	S61△
5#	1S926	200	8.0	40A	430	10m		150J	1.05 △	20	25A		4.0m	150J	200			Si	S50
6▼#	8PT2$	200	8.0	40A	250	10m		150J	20	8.0			25m	150	200			Si	M588
7#	S5B20	200	8.0	40A	430	10m		150J	1.05 △	20	25A		4.0m	25A	200			Si△	S50
8#	S8-02F	200	8.0	50	200	10m		150	1.1	8.0	25	50u			200			Si	M389
9	PA20†	200	8.0	55	300	8 3m		150	1.0	2 0	25	10u	100u	100	200			Si	M542
10#	SX752	200	8.0	125A	100	10m		160J	1.2	8.0	25J		1.0m	100J	200				S31a
11	E5C3	200	8.0	150	200			175	1 3	8.0	150	10u	1.0m	150	200			Si	DO4
12	1N2796	200	8.5	25A	75			175A	1.25	15	150C		5.0m	150C	200			Si	DO5
13	UT6120	200	9 0	100C	175	8 3m		175A	1.0	6.0 ⊘	25	10u	30m	100	200			Si	S277⊘
14	1N2786	200	10		180			150A	1 2	10			10m	150	200			Si	DO5⊘
15	1N2250	200	10	25$	200			150	60	10	25		1.0m	150	200			Si△	DO4
16	1N2250A	200	10	25C$	200			150	.60	10	25		50m	150	200			Si△	DO4
17	1N2251	200	10	25$	200			150	60	10	25		1.0m	150	200			Si△	S35
18	1N2251A	200	10	25C$	200			150	.60	10	25		50m	150	200			Si△	S35
19	BR102A†	200	10	25	200	8.0m		150	1 2	5 0	25	10u			220			Si△	M538
20#	DD4523	200	10	25	120	2.0m	10	150	1 0	10	25	10u		25	200			Si	S19
21#	G2010	200	10	25A	230	10m	17	150A	1 1	10 †	25		3 0m	125C	200			Si△	DO4
22#	MA232	200	10	25$	50			150					4 5m	125	125			Si△	S74
23#	MA240	200	10	25$	50			150					4 5m	125	300			Si△	M38
24#	P2010	200	10	25A	230	10m	17	150A	1 1	10 †	25		3 0m	125C	200			Si△	S95a
25#	SJ204E,K	200 †	10	25C	15		4 3	200C	1 0	75	25C	10u	1.5m	200C	200			Si△	DO4⊘
26▼#	10PM2†	200	10	40A	250	10m		150J	2 0	10			25m	150	200			Si	M586
27#	0601	200	10	45	300	10m		150J	1 4	30	25	100u			75			Si	S87e
28#	62R2	200	10	75A	115 §	10m		150C	1 1	10	25C		6 0m	150C	200			Si△	DO4⊘
29	1N1622	200	10	100A$	150	4 0m		100A	1.2	10	25		5.0m	25	200			Si	S43
30	1N4436†	200 †	10	100	100 §	8.3m	4.0	160A	1 2	10	100		1.0m⊘	100	200	500		Si	M249
31#	1S421	200	10	100B	200			175S	1.5	30	25A		50u	100	200			Si	S61△
32	S421	200	10	100A	200	10m		175A	1 5	30	25A		50u	100	200			Si△	S24c⊘
33	VR200X†	200 †	10	100	75	8 3m		150	1.5	10	25	2 0	5 0	150	200			Si△	M249
34	VRA200X	200	10	100	75	8 3m		150	1 5	10	25	2 0	5.0	150	200			Si△	M249*
35	VRB200X	200	10	100	75	8 3m		150	1 5	10	25	2.0	5.0	150	200			Si△	M249*
36	VRC200X	200	10	100	75	8.3m		150	1 5	10	25	2.0	5.0	150	200			Si△	M249*
37	VRD200X	200	10	100	75	8 3m		150	1 5	10	25	2 0	5.0	150	200			Si△	M249*
38#	1S162	200	10	120B	200			175	1.6	50	25J		5.0m	175J	200			Si△	S103
39#	SA2AN12	200	10	120B	210			150J	470m⊘	10			2 0m		200			Si△	DO4⊘
40#	D2010	200	10	125C$	130			125B	1.5	10	25		30m	125B	200			Si△	S4c
41#	S2AN12	200 %	10	125B	210			150J	500m⊘	9.5	25B		2 0m	125B				Si△	DO4⊘
42	367D	200 †	10	130C	150			180J	1.2	10	25C		10m	180C	200			Si	S27
43	408D	200	10	145C	175	8 3m		175J	1.2	10	25C		2 0m⊘	175J	200			Si	DO4
44	1N250	200	10	150$				175S	1 5	25	25		5 0m⊘	150C	200			Si	DO5
45	40110	200	10	150C	140 §			175C	.60	10	150C	75u△	1 5m⊘	150C	200			Si△	DO4
46	E6C3	200	10	150	200			175	1 3	10	150	10u	1 0m	150	200			Si	DO4
47	F2C3	200	10	150C	200			175J	1 3	30	25C		1.0m	150C	200			Si	DO5
48#	2WMT2	200	11	100C	220 §	10m		125J	1 5	40	100C		7 0m	125J	200			Si*	DO5
49▼	HEPR0132-RT	200	12	25$	300			190†										Si	DO4
50	SL200	200	12	50A	300			175C	1.4	12	25A		2 0m	150A	200			Si	DO4⊘
51#	8AN20	200	12	55A	210	10m		140B	65 ⊘	13	25A		10m	120J	200			Si	S4q⊘#
52#	2AF2	200	12	60A	140 §	10m	1 8	190J	95	12			2 0m	150J	200			Si	M324b#⊘
53#	2AF2LV	200 #	12	60A	140 §	10m	1 8	190J	95	12			2 0m	150J	200			Si	M324d#⊘
54	1N5326	200	12	100C	200 §			175C	1.0	12	100C		5 0m	100C	125			Si	A185b
55#	12F20	200	12	100A	150 §	10m		190J	.65	12	100B		2 5m	100B	200			Si△	DO4⊘
56	20J3P	200	12	100A	150	4 0m		100A	1 3			5.0m			200			Si	S23
57	UT8120	200	12	100C	200	8 3m		175A	1 0	8 0 ⊘	25	10u	30m	100	200			Si	S277⊘
58#	SR10L4S	200	12	120C	200			150J	1 2 †	40	25C		1.5m⊘	150J	200			Si	S249a
59	1N4506	200	12	135C	240		10	175C	1 4	12			2.5m	135C	200	250		Si	DO4
60#	2AF2LH	200 #	12	140A	140 §	10m	1.8	190J	95	12			2 0m	150J	200			Si	M324c#⊘
61#	2AF2PLH	200 ⊘	12	140B	160 §	10m		190B	55 ⊘	12 †	25A		1 5m	150B	200			Si	M324c⊘
62#	2AF2PLV	200 ⊘	12	140B	160 §	10m		190B	55 ⊘	12 †	25A		1 5m	150B	200			Si	M324d⊘
63#	2AF2PPF	200 ⊘	12	140B	160 §	10m		190B	550m⊘	12 †	25A		1 5m	150B	200			Si	M324f⊘
64#	2AF2PPP	200 ⊘	12	140B	160 §	10m		190B	550m⊘	12 †	25A		1.5m	150B	200			Si	M324e⊘
65	1N1202	200 *	12	150C	100		18	190J	1 4	20	25J	10u			200			Si	S27⊘
66	1N1202A	200	12	150B$	240			150B	1 3	12	25A		3 0m	150A	200			Si△	DO4△⊘
67	JAN1N1202A,RA	200 $	12	150C	240	8 3m		200C	1 35	38	25	50u	1.0m	150	200			Si	DO4⊘
68	1N1202B	200	12	150C$	250			150B	1 1	12	25A		1.0m	150A	200			Si△	DO4△
69	1N2578	200 .	12	150C$	250			150C	1.2	20	25C	8.0u	1 0m	150C	200			Si△	DO10
70	1N2589	200 ⊘	12	150C	250			150C	1 0	12		2 0u	.20m	150C	200			Si△	DO10
71	1N2600	200	12	150C$	250			150C	1 5	20	25C	20u	2 0m	150C	200			Si△	DO10
72	BY503	200	12	150C$	250			150C	1 2	12	25C	8 0u	1 0m	150C	200			Si	S35
73	BY513	200	12	150C$	250			150C	1 0	12	25C	2 0u	20m	150C	200			Si	S35
74	BY523	200	12	150C$	250			150C	1.5	12	25C	20u	2.0m	150C	200			Si	S35
75	BY803	200	12	150C$	250			150C	1 2	12	25C	8 0u	1.0m	150C	200			Si△	DO4
76	BY813	200	12	150C$	250			150C	1 0	12	25C	2 0u	20m	150C	200			Si△	DO4
77	BY823	200	12	150C$	250			150C	1 5	12	25C	20u	2 0m	150C	200			Si	DO4
78	E7C3	200	12	150	200			175	1.3	12	150	10u	1 0m	150	200			Si	DO4
79	MR1122	200	12	150C	300 §			190J	1 0	12	25C	500u			200			Si△	DO4
80	TR1122	200	12	150C	300 §			190J	1 2	12	25C	50u	40m⊘	150C	200			Si	DO4
81	UR123DA	200	12	150S$	240			175S	1.2	12	25		3 0m	150S	200			Si	DO10
82#	SU212	200	12	175C$	150			175S	1 2	12	25		4.0m	150C	200			Si△	M80
83	VTE200	200 †	12 5	100C	250	8.3m	4 0	180J	1 5	25	25C		5 0m	180	200	700		Si△	Z62*
84	VTF200	200 †	12 5	100C	250	8.3m	4 0	180J	1 5	25	25C		5.0m	180	200	700		Si△	Z62*
85	VTG200	200 †	12 5	100C	250	8.3m	4 0	180J	1 5	25	25C		5 0m	180	200	700		Si△	Z62*
86	MT20	200	14	150B	240			185B	1 0 △	14	150B	100u△						Si△	DO4
87▼	HEP153-RT	200	15	25$	250			175†										Si	DO5
88▼	HEPR0162-RT	200	15	25$	250			175†										Si	DO5
89▼#	15PT2$	200	15	40A	250	10m		150J	2.0	15			25m	150	200			Si	M589
90#	SC215	200	15	50A	150			160J	1.1	15	25A	100u	.50m	100A	200			Si△	DO4
91	SCDA2	200	15	55A	300			150A	1 0	3 0	25A	10u	100u	100A	200			Si	M497
92	SCNA2	200	15	55A	300			150A	1 0	3.0	25A	10u	100u	100A	200			Si	M497
93	SCPA2	200	15	55A	300			150A	1 0	3.0	25A	10u	100u	100A	200			Si	M497
94	15GS2	200	15	75C	150	8 3m		150J	1 5	32	25A	20u	500u	150C	200			Si△	DO4⊘
95#	5M20	200	15	79B	300	10m		130A	1 3 †	50	130J		5.0m		200			Si	S193a
96	1N1079	200	15	100A	150 §	4.0m		170C	1 5	15	25A	20m			200			Si	S68d
97	20Q3	200	15	100A$	150	4.0m		150	1.5	15	25		20m	25	200			Si	S68
98#	RN2015	200	15	100C	350	10m	25	125C	1 2	15 †	25		3.0m	125C	200			Si△	DO5
99#	SR10F4S	200	15	115C	200			150J	1 2 †	40	25C		1.5m⊘	150J	200			Si	M337a
100#	SR10N4S	200	15	115C	200			150J	1.2 †§	40	25C		1 5m	150J	200				C112
101#	S2AN15	200	15	120B	220			150J	490m⊘	15			3 0m		200			Si△	S324⊘
102#	S2BN15	200	15	120B	220			150J	490m⊘	15			3.0m		200			Si△	S320⊘
103	368D	200	15	125C	240	8.3m		180J	1.3	15	25C		2.0m⊘	130C	200			Si	DO4
104	409D	200	15	125C	250	8.3m		175J	1.3	15	25C		2 0m⊘	175J	200			Si	DO4
105	BYY22	200	15	135C	100 §	1		150J	.90	1.0	25		2.0m	125C	200			Si	S72c
106	BYY23	200	15	135C	100 §	1		150J	90	1 0	25		2.0m	125C	200			Si	S72c
107#	SR10J4S	200	15	140C	200	8 3m		175	1 2	40	25C		3.0m	175J	200	400	300u	Si△	M337
108	1N3210	200	15	150C	250	8 3m		175C	1 5	40	25C	1 0m	10m	150C	200			Si	S4n
109	703D	200	15	150	250	8 3m	15	175J	1 2	40	25	2 0m	5 0m	175J	200			Si△	M78
110	F3C3	200	15	150C	200			175J	1.3	30	25C		1.0m	150C	200			Si	DO5

SYMBOLS AND CODES EXPLAINED IN INTERPRETER

5. RECTIFIERS

IN ORDER OF (1) PIV, (2) MAX AVG FWD CURRENT (3) TEMPERATURE, and (4) TYPE No.

LINE No.	4 TYPE No.	1 PIV (V)	MAX AVG FWD DC CURRENT 2 Io (A)	3 at TEMP (°C)	MAX RATINGS @ 25°C SURGE CUR. PEAK 1 Cy (A)	PULSE WIDTH (s)	DISS. (W)	MAX. TEMP (°C)	MAXIMUM FORWARD VOLTAGE DROP Vf (V)	at If (A)	at TEMP (°C)	MAX. REVERSE CURRENT Ir @25°C & Vr (A)	Ir at T & Vr (A)	TEMP T (°C)	TEST VOLT Vr (V)	AVALANCHE RATINGS MAX V BKDN. (V)	MIN SLOPE (A/V)	DESCRIPTION MAT.	DWG. No.
1#	16F20	200	16	100B	350	10m	17	190	55	16	100		2 5m	175	200			Si	DO4
2	1N3618	200	16	155B$	300			175B					2.0m	175B	200			Si△	DO4
3	2020	200	16 5	25A	200		4 0 Ø	150A	60 Ø	19	25A		1 0mØ	150C	200	400		Si△	DO4#△
4#	SK203K	200	17 5	85C	230	10m		150J	1.4	50	25A	20u	500u	150C	200			Si△	DO4⧄
5	S5978D,9D	200	18					150C	1.2										A1ss#
6#	BYY20/200	200 %	18	25	200	10m		175J	1 05	18	25		2.0m	125	75			Si	M38
7#	BYY21/200	200 %	18	25	200	10m		175J	1.3	60	25		2.0m	125	75			Si	M38
8#	S2BR8	200 %	18	120B	188		18	140B	.60 Ø	18	25		10m	125	200			Si	S122a
9	40210	200	18	150C	250 §			175A	650mØ	18	150C	100u	2 5mØ	150C	200			Si△	DO5⧄
10	V200	200	18	150	300			175	1 7	18	25		2.0m	25	200			Si	DO21
11	1N2274	200	20	25$	400			150	60	20	25		1.0m	150	200			Si△	DO4
12#	22R2	200	20	25A	250 §	10m	25	150J	50	20	25J		4.5m	150J	200			Si	DO5⧄
13#	MA252	200	20	25$	100			150					6.0m	125	125			Si△	S72a
14#	1S931	200	20	40A	1 1k	10m		150J	1.05 △	40	25A		10m	150J	200			Si△	S51
15▼#	20PM2†	200	20	40A	250	10m		150J	2.0	20			25m	150	200			Si	M587
16#	S8B20	200	20	40A	100	10m		150J	1.05 △	40	25A		10m	25A	200			Si△	S51
17#	S20-02F	200	20	50	600	10m		150	1.1	60	25	10u		25	200			Si	S19p
18#	21PT20	200 *	20	100B	360 §	8.3m		170J	1.2 †	20	25		1.6m	140B	200			Si	M471
19#	BYX28/200,A,B	200	20	100	350	10m		175J	1 35	60	25		3.0m	125	85			Si	Z59⧄
20	TR200	200	20	100C$				175A	2.0				10mØ	100C	200			Si	DO5
21	A40B	200	20	110B	300			175B	1.2	20	25J	1.0m			200			Si	S88
22	A41B	200	20	110C	300			175J	1.2	20	25J	1 0m			200			Si	S88
23	A44B	200	20	110C	300			175J	1 2	20	25J	1 0m	8.0mØ	150J	200			Si	M76⧄
24#	1S172	200	20	120B	400			175	1.6	100	25J		12m	175J	200			Si△	S102
25#	S2AN20	200	20	120B	250			150J	480mØ	20			3.0m		200			Si△	S324⧄
26#	S2BN20	200	20	120B	250			150J	480mØ	20			3.0m		200			Si△	S320⧄
27	417D	200	20	150C	350	8.3m		175J	1 05	20	25C		2 0m⧄	150C	200			Si	DO5
28	F4C3	200	20	150C	600			175J	1.3	50	25C		2 0m	150C	200			Si	DO5
29	TM29	200	21	75C				190S	1 2	12	25		2.0m⧄	150	200			Si	S145
30#	3WM2	200	21	100C	220 §	10m		125J	1 4	60	100C		14m	125J	200			Si*	S8
31	1N2784	200	22	40A$	200			175C	1.5	25	25C		1.0m	150C	200			Si	DO4⧄
32	MR752	200 †	22	60	400			175J	900m	6.0	25A	250u	1 0m	150J	200			Si△	A264
33	1N3964	200	22	120C$	200		4 0 Ø	150A	.60 Ø	26	25A		1 0mØ	150C	200	400		Si△	DO4△#
34	1N1194A	200	22	150	100	1		200J	1.2	60	25C		5 0m	175C	200			Si	DO5
35	1N1455	200	25					190J	1 5	25	25J	25m						Si	M56d
36#	25B20T†	200	25		700	20m		150A				20m			200				M563
37	1N3493	200	25	25C	300	8 3m		175C	1 7	18	150C	1 0u	8 0m	150C	200			Si	DO21
38▼	HEP600-RT	200	25	25$	300			175†										Si	DO21⧄
39▼	HEP601-RT	200	25	25$	300			175†										Si	DO21
40▼	HEPR0222-RT	200	25	25$	300			175†										Si	DO21⧄
41	PB20†	200	25	55	300	8.3m		150	1 0	3.0	25	10u	100u	100	200			Si	M542
42	PBU20†	200	25	55	300	8 3m		150	1.0	3.0	25	10u	100u	100	200			Si	M542a
43▼	S25A20	200	25	55	300	8 3		150	1 0	3.0	25	10u	100u	100	50			Si	M542
44#	4AF2	200	25	60A	350 §	10m	80	190J	95	25			3 0m	150J	200			Si	M324b#⧄
45#	4AF2LV	200 #	25	60A	350 §	10m	80	190J	95	25			3.0m	150J	200			Si	M324d#⧄
46	25P20	200	25	100C	300			175J	7 0 Ø	25 †	25C		7 0m⧄	150C	200			Si△	M38ab⧄
47#	BYX21/200	200	25	100	300	10m		175J	1.45	60	25		3 0m	125	85			Si	M324⧄
48	VT200†	200 †	25	100	250	8.3m		180	1 5	25	25		5 0	180	200	700		Si△	M560
49	VTA200	200 †	25	100C	250	8.3m	4 0	180J	1 5	25	25C		5 0m	180	200	700		Si△	Z62*
50	VTB200	200 †	25	100C	250	8.3m	4 0	180J	1.5	25	25C		5.0m	180	200	700		Si△	Z62*
51	VTC200	200 †	25	100C	250	8 3m	4 0	180J	1 5	25	25C		5 0m	180	200	700		Si△	Z62*
52	VTD200	200 †	25	100C	250	8 3m	4 0	180J	1.5	25	25C		5 0m	180	200	700		Si△	Z62*
53	VY200X†	200 †	25	100	150	8 3m		150	1.8	25	25	2 0	5 0	150	200			Si△	M560
54#	BYX21L400	200	25	120C	250	10		175J	1.6 †	80	25J		3.0m	125J	180			Si	M80a⧄
55#	SR20F4S	200	25	120C	400			150J	1.2 †	80	25C		1.5mØ	150J	200			Si	M337a
56#	SR25A4S	200	25	120C	600			150J	1.2 †§	80	25C		3.0m	150J	200				S249b
57#	DD7123	200	25	139B	400	10m	30	175S	1 3	25	25B	10u	500u	150C	200			Si△	S52d⧄
58#	4AF2LH	200 #	25	140A	350 §	10m	80	190J	95	25			3.0m	150J	200			Si	M324c#⧄
59#	4AF2PLH	200 Ø	25	140B	400 §	10m		190	.55 Ø	25 †	25A		2 0m	150B	200			Si	M324c
60#	4AF2PLV	200 Ø	25	140B	400 §	10m		190	.55 Ø	25 †	25A		2.0m	150B	200			Si	M324d
61#	4AF2PPF	200 Ø	25	140B	400 §	10m		190	550mØ	25 †	25A		2.0m	150B	200			Si	M324f⧄
62#	4AF2PPP	200 Ø	25	140B	400 §	10m		190	550mØ	25 †	25A		2.0m	150B	200			Si	M324e⧄
63	1N1194	200 *	25	145C	125		30	190J	1.4	30	25J	10u			200			Si	S29
64	1N2156	200 Ø	25	145B	400			200J	60 Ø	25	145B		4.0mØ	145B	200			Si*	DO5⧄
65	418D	200	25	145C	400	8.3m		175J	1 1	25	25C		2 0m⧄	145C	200			Si	DO5
66	F5C3	200	25	150C	600			175J	1.3	90	25C		2 0m	150C	200			Si	DO5
67	PBT20$	200	27 5	55	300	8 3m		150	1.0	3.0	25	10u	100u	100	200			Si	M543
68#	ZR32C	200	30	20A$	400	10m		140A	1 2	30	25	500u	2 0m	100	200			Si△	S38
69	1N1436	200	30	25B	160	1	38	175A	1 2	60	25		5 0m	150B	200				S143
70	3120	200	30	25A	200		4 0 Ø	150A	.60 Ø	34	25A		1 0mØ	150C	200	400		Si△	DO5#△
71▼#	30PT2$	200	30	40A	250	10m		150J	2.0	30			25m	150	200			Si	M590
72	PBC20	200	30	55C	300			150C	1.0	3.0	25C	10u	100u	100C	200			Si	M447⧄
73	1N3661	200 †	30	100C$	400 §			175C	.70 Ø	25	25		4.0m⧄	150	200			Si	DO21
74	PZ140B	200 †	30	100C	400			175C	70 Ø	2 0	25C		4 0m⧄	150C	200	550		Si	DO21⧄
75#	3C2	200	30	110C	500	10m		150J	1 5	30	40A		3 0m	25	200			Si*	S181
76#	S2AN31	200	30	120B	347			150J	600mØ	30			4.0m		200			Si△	S325⧄
77#	S2BN31	200	30	120B	347			150J	600mØ	30			4.0m		200			Si△	S321⧄
78	G3C3	200	30	150C	1 5k			175J	1.3	200	25C		5.0m	150C	200			Si	DO8
79#	15AN20	200	34	20A	500	10m		140B	700mØ	25	25A		20m	120J	200			Si	S241a⧄#
80	1N1459	200	35					190J	1 5	35	25J	25m						Si	M56d
81#	DD.713	200 *	35	25A				100A	92	35	25A		1 0m	150A	200			Si	S125c
82▼	HEPR0253-RT	200	35	25$	400			190†										Si	DO5
83	1N4525	200	35	115C	500		20	175C	1.4	35			3 5m	115C	200	250		Si	DO5
84	1N1186	200	35	140C	500	8.3		140C	1 7	35	140C							Si	S29a
85#	32R2	200	35	140C	500 §	10m		200J	1 3	35	25C		10m	150C	200			Si△	DO5⧄
86	371D	200 †	35	140C	500	8.3m		190J	1.2	35	25C		20m	190J	200			Si	DO5
87	127350B	200	35	150	500	8 3m		200J	1.3	35	25C		5.0m⧄	150C	200			Si	DO21
88#	SUT201K	200	36	85C	600	10m		150J	1 6	90	25A	200u	3 0m	150C	200			Si△	DO5⧄
89	1N250A	200	37	120C$	600			175J	1 5	50	25		2 0m	150C	200			Si	DO5
90	1N250B	200	37	120C$	350			175J	1.5	50	25		2.0m	150C	200			Si	DO5
91	1N1304	200	37	120C$	600			175C	1 5	50	25		2 0m	150C	200			Si	DO5
92#	40B20T†	200	40		1 1k	20m						20u			200				M563
93#	BYX52-300	200	40	25C	650			175J	1.8	150	25J		1.6m	125J	200			Si	DO5⧄
94#	1S936	200	40	40A	2 7k	10m		150J	1 05	100	25A		20m	150J	200			Si△	#
95	S12C20	200	40	40A	2.7k	10m		150J	1.05	100	25		20m	25A	200			Si△	#
96#	K2040	200	40	90C	800	10m	44	125C	1.2	40 †	25		4.0m	125C	200			Si△	S245
97#	6WM2	200	40	100C	650 §	10m		125J	1.4	110	100C		14m	125J	200			Si*	S8
98#	10M20	200	40	104B	800	10m		130A	1.2 †	120	130J		10m		200			Si	S4s
99▼#	4C2	200	40	110C	700	10m		150S	1.5	40	40A	3.0m	12m	150	200			Si*	S181
100	419D	200	40	120C	500	8.3m		175J	1.2	40	25C		2.0m⧄	120C	200			Si	DO5
101#	S2AN40	200	40	120B	485			150J	500mØ	40			4.0m		200			Si△	S325⧄
102#	S2BN40	200	40	120B	485			150J	500mØ	40			4.0m		200			Si△	S321⧄
103	40HF20	200 †	40	140C	500 §	8 3m		180J	1.3	40 †	140C		7.0m⧄	140C	200			Si△	S21e⧄
104	1N1186A	200	40	150	200	1		200J	1.1	100	25C		5 0m	175C	200			Si	DO5
105#	BYZ14	200	40	150J	800	10m		150J	.80	1.0	25C		10m	150J	400			Si△	S72j
106#	BYZ15	200	40	150J	800	10m		150J	.80	1.0	25C		10m	150J	400			Si△	S72k
107	G4C3	200	40	150C	1 5k			175J	1.3	200	25C		5.0m	150C	200			Si	DO8
108	127351B	200	44	150	700	8 3m		200J	1.3	44	25C		5.0m⧄	150C	200			Si	DO21
109#	25AN20	200	45	20A	700	10m		140B	700mØ	40	25A		20m	120J	200			Si	S241a⧄#
110	TR324	200	45	50C	300			175C	1.5	50	25C	1.0m△	8 0m⧄	150	200			Si	M78

SYMBOLS AND CODES EXPLAINED IN INTERPRETER

5. RECTIFIERS

IN ORDER OF (1) PIV, (2) MAX AVG FWD CURRENT (3) TEMPERATURE, and (4) TYPE No.

LINE No.	4 TYPE No.	1 PIV (V)	MAX AVG FWD DC CURRENT 2 Io (A)	3 at TEMP (°C)	MAX RATINGS @ 25°C SURGE CUR. PEAK 1 Cy (A)	PULSE WIDTH (s)	DISS. (W)	MAX. TEMP (°C)	MAXIMUM FORWARD VOLTAGE DROP Vf (V)	at If (A)	at TEMP (°C)	MAX. REVERSE CURRENT Ir @25°C & Vr (A)	Ir at T & Vr (A)	TEMP T (°C)	TEST VOLT Vr (V)	AVALANCHE RATINGS MAX V BKDN. (V)	MIN SLOPE (A/V)	MAT.	DESCRIPTION DWG. No.
1	1N2449	200	45	60C	300			175B	1 1	20	25		5 0mØ	150B	200			Si△	DO5
2	1N1463	200	50					190J	1.5	50	25J	50m						Si	M56c
3	SLEA2†	200	50		150	16m			1.0	3.0	25	5.0u	100u	100	200			Si	M546
4#	MA262	200	50	25$	250			150					11m	125	200			Si△	S72
5	1N2788	200	50	40A$	600			175C	1.5	100	25C		2.0m	150C	200			Si	DO5Ø
6	1N413B	200	50	100C	525 §			175C	1 5	50	175C		25m	175C	200			Si	DO8
7#	SL203A,K	200 †	50	100C	150		10	150C	1.2	10	25C	50u	1 5m	150C	200			Si△	DO4Ø
8	1N3968	200	50	120C$	600		7.0 Ø	150A	.60 Ø	60	25A		2 0mØ	150C	200	400		Si△	DO5△#
9	50C20	200	50	140	400	1	55	190J	1.1	50	25		20m	150	50			Si	DO5△Ø
10	1N2174	200	50	150C	525			175C	1.5	50	150C		25m	150C				Si	DO8
11	1164B	200	50	150	1.0k	8 3m		200J	1.2	40	25C		4.0mØ	175J	200	550		Si	DO5
12	MR1203	200	50	150C	800	8 3m		190J	.40 Ø	50	150C		10m	150C	200			Si	M226Ø
13#	S500-2	200	55	50	3.7k	20m		120	1 2	500	50	1.0m			200			Si	M189
14#	S2AN55	200	55	125B	935			150J	500mØ	55			6 0m		200			Si△	Ø
15#	S2BN55	200	55	125B	935			150J	500mØ	55			6 0m		200			Si△	S322Ø
16#	S2GN55	200	55	125B	935			150J	500mØ	55			6 0m		200			Si△	S322Ø
17	1N2461	200	60	60C	450			175B	1 1	30	25		5.0mØ	150B	200			Si△	DO5
18#	SB201K	200	60	85C	700	10m		150J	1.7	210	25A	200u	3 0m	150C	200			Si△	S168aØ
19#	SBT201K	200	60	85C	700	10m		150J	1 7	210	25A	200u	3 0m	150C	200			Si△	S168aØ
20	1N2131	200	60	100C	700 §			175C	1 4	60	115C		30m△	175C	160			Si	DO5
21	1N2131A	200	60	100C	900 §			200C	1 3	60	140C		30m△	200C	160			Si	DO5
22#	KS2060	200	60	110C	1 5k	10m	67	150C	1 2	60 †	25		5 0m	125C	200			Si△	S245
23#	25G20	200	60	112B	850 §	10m	60	190B	.55 Ø	25	25A							Si*	DO5Ø
24#	20M20	200	60	126B	1 0k	10m		175A	1.5 †	180	175J		10m		200			Si	S4t
25	H5C3	200	60	150C	3 0k			175J	1 3	300	25C		10m	150C	200			Si	DO9
26	TR203	200	65	75C				175C	1 5	100	25C		5 0mØ	150C	200			Si	DO5
27#	45AR20	200	70	25A	1.1k	10m		140B	70 Ø	90	25A		25m	120J	200			Si	S8j#
28	1N4136	200	70	100C	750 §			175C	1 6	70	100C		48m	175C	200			Si	DO5
29#	BYX34/200	200	70	100B	1 0k	10m	30	150J	1 7	250	150J		25m	125J	200	515		Si	S12cØ
30#	S2AN71	200	70	120B	1.2k			150J	470mØ	70			6 0m		200			Si△	Ø
31#	S2BN71	200	70	120B	1 2k			150J	470mØ	70			6.0m		200			Si△	S323Ø
32#	S2GN71	200	70	120B	1 2k			150J	470mØ	70			6.0m		200			Si△	S322Ø
33	70H20	200	70	125C	1 2k§	8 3m		200J	1 3	70 †	125C		10mØ	125C	200			Si*	DO5Ø
34	70H20A	200 †	70	125C	1 2k§	8 3m		200J	1.3	70	125C		10mØ	125C	200			Si△	DO5Ø
35	1N1399	200 †	70	150C	1 2k			190J	1 25	70	150C		30m	150C	200			Si	S14b
36	1N3142	200	70	150C	1.2k			175S	90 △	70	190J		15mØ	150C	200			Si	S206
37	CH109B2	200	70	150C	1 5k	8.3m		200C	1 3 △	150	150C		15mØ	150C	200			Si*	S53△
38	J4C3	200	70	150C	4 0k			175J	1 2	300	25C		10m	150C	200			Si	DO9
39	J5C3	200	70	150C	4 0k			175J	1.2	300	25C		10m	150C	50			Si	DO9
40	20JH3	200	72		150	4 0m		100A	1 2									Si	S11fØ
41	1N1467	200	75					190J	1 5	75	25J	50m						Si	M56c
42#	10WM2	200	75	100C	1 0k§	10m		125J	1 5	200	100C		20m	125J	200			Si*	M43a
43▼	75E20	200	75	150C	850	4 0m		190J	1 0	90	25C		40m	25C	200			Si	S83a△Ø
44	75F20	200	75	150C	850	4 0m		190J	1.0	90	25C		40m	25C	200			Si	M56a△Ø
45#	1S941Ø	200	80	40A	5 4k	10m		150J	1.05	200	25A		40m	150J	200			Si△	M26#
46#	S16B20	200	80	40A	5 4k	10m		120J	1 05 △	200	25A		40m	25A	200			Si△	M26#
47#	8C2	200 †	80	100J	1 2k		100	150J	1.3	80	100C		5 0mØ	25J	200			Si*	S110a
48	1N1471	200	100					190J	1.5	100	25J	60m			100			Si	M56f
49	ST620	200	100	25A	1 6k			190J	1 2	100	25A		5 0m	25	200			Si	Z29
50#	70BN20	200	100	40A	1.8k	10m		140B	70 Ø	130	25A		30m	120J	200			Si	S8kØ#
51▼#	101R2S	200	100	50C	1 6k			175J	1.6	500	25	25m		175J	200			Si	S357
52	1N2429	200	100	75C	950			175B	1 1	50	25		10mØ	150B	200			Si△	DO8
53#	10C2Ø	200 †	100	100J	1.5k		120	150J	1 2	100	100C		5 0mØ	25J	200			Si*	S110a
54#	1S432R	200	100	105B	1 6k			175J	1.6	500	25J		25m	175J	200			Si△	S12f
55#	SR100K4S	200	100	120C	1 6k			120†	1.0 †	105	25C		6 0m	150J	200			Si	M228d
56	1N3289	200	100	130C	1 6k	8 3m		200C	1 5	100	130C		24m	130B	200			Si	DO8
57	1N3289A	200	100	130C	2 3k			200C	1 25	100	130C		24m	130C	200			Si	DO8
58	1N3289R	200	100	130B	1 6k			200A	900m	100	200J		22	200J	200			Si	DO8
59	A70B	200	100	130B	1.6k	8.3m		200J	600mØ	100	130B		9 5m	130B	200			Si	DO8
60	A71B	200	100	130B	1.6k	8.3m		200J	600mØ	100	130B		9.5m	130B	200			Si	DO8
61	MR1213SB	200	100	135C	2.0k§	8.3m	160	190J	400mØ	80 †	150C		15m	150C	200			Si△	S199
62	MR1213SL	200	100	135C	2.0k§	8 3m	160	190J	400mØ	80 †	150C		15m	150C	200			Si△	S87a
63	MR1813SB	200	100	135C	2.0k§	8 3m	160	190J	400mØ	80 †	150C		15m	150C	200			Si△	S199m
64	MR1813SL	200	100	135C	2.0k§	8 3m	160	190J	400mØ	80 †	150C		15m	150C	200			Si△	S87f
65	100E20	200	100	150C	2 0k	4 0m		190J	1 0	140	25C		40m	25C	200			Si	S83△Ø
66▼	100F20△	200	100	150C	2.0k	4 0m		190J	1.0	140	25C		40m	25C	200			Si	M56a△Ø
67	150L20A	200 †	100	150C	3.0k§	8.3m		200J	1.2	150 †	150C		16mØ	150C	200			Si*	DO30Ø
68	1N3972	200	104	120C$	1 5k		12 Ø	150A	60 Ø	120	25A		5 0mØ	150C	200	400		Si△	DO8△#
69	S4220	200	104	120C	1.5k		2.5 ØØ	175J	.60 Ø	104	25A		5.0mØ	150C	200	400		Si	DO8△
70#	S200-02F	200	110	50	4.0k	10m		150	1.3	600	25	20m			200			Si	M189a
71	1N1663	200	116	120C	3.0k			175J	1.3	200	25		10m	150	200			Si	S14d
72	10912B	200	125	150	1.7k	8 3m		200J	1.3	125	25C		10mØ	150C	200			Si	DO8
73#	125BN20	200	130	20A	3.0k	10m		140B	700mØ	180	25A		40m	120J	200			Si	S120aØ#
74#	BYX32/200	200 †	130	135C	1.6k			190J	1.7	500	190J		20m	175J	200			Si△	S203bØ
75	1N1475	200	150					190J	1.5	150	25J	60m			100			Si	M56f
76	1N2439	200	150	75C	1 2k			175B	1.1	70	25		10m	150B	200			Si△	DO8
77♦#	15C2	200	150	90C	2.0k	10m		150S	1.5	150	40A	6 0m	30m	150	200			Si	S12j
78	1N3086	200	150	100C	3.0k§			200C	1.2	150	150C		17m	150C	200			Si	DO30
79	1N4588	200	150	110	3.0k			200A	1.4	150	110		30m	200	200			Si	DO8Ø
80#	S2PN125	200 %	150	110B	3 3k			150J	1.1	150			30m		200			Si*	S319Ø
81#	S2BR125	200 %	150	115B	3.3k			150J	1.1	150			40m		200			Si*	F19
82#	S2KN125	200 %	150	115B	3.3k			170J	1.1	150			30m		200			Si*	F80Ø
83#	45M20	200	150	116B	3.0k	10m		175A	1.5 †	500	175J		20m		200			Si	S8m
84#	SU201A,K	200 †	150	120C	600		30	150C	1.2	30	25C	200u	2.0m	150C	200			Si△	S168aØ
85#	S2LN125	200 %	150	125B	3.3k			150J	1.1	150			30m		200			Si*	M521Ø
86	150K20A	200 †	150	150C	3.0k§	8 3m		200J	1.2	150 †	150C		16mØ	150C	200			Si*	DO8Ø
87	ST720	200	160	25A	3.0k			190J	1.2	160	25A		40m	25	200			Si	Z28
88	ST1020	200	160	25	3.0k			190J	1 2	160	25		40m	25	200			Si	Z27
89#	ST1	200	160	110C	3.8k	10m	190	150C	1.3	160 †	25		4.0m	125C	200			Si△	S245a
90	S5120	200	160	120C	2.2k		3 0 ØØ	175J	.60 Ø	160	25A		10mØ	150C	200	400		Si△	DO9△
91	1N1284	200 *	160	125C	1.3k			190J	1 3	210	25J		40m	25	200			Si	S14g
92	1N1294	200 *	160	125C	1 3k			190J	1.3	210	25J		40m	25	200			Si	S8e
93	1N3263	200 †	160	125C	2 0k			190J	1.25	160	125C		12m	125C	200			Si	DO9Ø
94	160E20	200	160	150C	5 0k	4 0m		190J	1 0	160	25C		40m	25C	200			Si	S83△Ø
95	175E20	200	175	150C	5 0k	4 0m		190J	1.0	175	25C		40m	25C	200			Si	S83△Ø
96	175F20	200	175	150C	5.0k	4 0m		190J	1.0	175	25C		40m	25C	200			Si	M56a△Ø
97#	200BN20	200	180	20A	7 5k	10m		140B	700mØ	240	25A		40m	120J	200			Si	S120aØ#
98	SCDAS2	200	200	55A	900			150A				50u	500u	100A	200			Si	M495
99	SCNAS2	200	200	55A	900			150A				50u	500u	100A	200			Si	M495
100	SCPAS2	200	200	55A	900			150A				50u	500u	100A	200			Si	M495
101#	T21△	200	200	110C	3.8k	10m	240	150C	1.3	200 †	25		4.0m	125C	200			Si△	S246
102	200UB20	200	200	115C	3 5k§	8 3m		165J	1.25	200 †	115C		10mØ	115C	200			Si*	S279Ø
103#	S2BN200	200 %	200	120B	4 0k		250	150B	600mØ	190	25B		40m	125C	200			Si	S14e
104	411D	200	200	130	3 0k	8 3m		200J	1 5	125	130C		8.0mØ	130C	200			Si	DO8
105	MR1223FB	200	200	138C	3 6k	8 3m		190C	40 Ø	160	150C		20m	150C	200			Si△	M227
106	MR1223FL	200	200	138C	3 6k	8 3m		190C	.40 Ø	160	150C		20m	150C	200			Si△	M228
107	MR1223SB	200	200	138C	3 6k	8 3m		190C	.40 Ø	160	150C		20m	150C	200			Si△	S199
108	MR1223SL	200	200	138C	3 6k	8 3m		190C	.40 Ø	160	150C		20m	150C	200			Si△	S87b
109#	20C2	200	220	100C$	3 3k	10m		150	1 2	220	25		5.0m	25	200			Si	S184
110	410D	200	220	110C	3 0k	8.3m		190J	1.3	150	110C		10mØ	110	200			Si	DO8

SYMBOLS AND CODES EXPLAINED IN INTERPRETER

5. RECTIFIERS

IN ORDER OF (1) PIV, (2) MAX AVG FWD CURRENT (3) TEMPERATURE, and (4) TYPE No.

LINE No.	TYPE No.	PIV (V)	MAX AVG FWD DC CURRENT Io (A)	at TEMP (°C)	MAX RATINGS @ 25°C SURGE CUR. PEAK 1 Cy (A)	PULSE WIDTH (s)	DISS. (W)	MAX. TEMP (°C)	MAXIMUM FORWARD VOLTAGE DROP Vf (V)	at If (A)	at TEMP (°C)	MAX. REVERSE CURRENT Ir @25°C & Vr (A)	Ir at T & Vr (A)	TEMP T (°C)	TEST VOLT Vr (V)	AVALANCHE RATINGS MAX V BKDN. (V)	MIN SLOPE (A/V)	DESCRIPTION MAT.	DWG. No.
1▼#	1S2343	200	240	92C	5.0k§	8.3m		150J	1.2	400	25C		30m	150J	200			Si△	M568
2♦#	FD200B4	200	240	92C	5.0k§	8.3m		150J	1.2	400	25C		30m	150J	200			Si△	M568
3	1N1673	200 *	240	120C	1.8k			190J	1.25	300	25J		50m	25	200			Si	S14f
4	1N3164	200 *	240	120C	3.0k			190J	1.25	240	25C		16m	125C	200			Si	S14f2
5	1N1333	200 *	240	125C	1.8k			190J	1.25	300	25J		50m	25	200			Si	S14f2
6	1N1379	200 *	240	125C	1.8k			190J	1.25	300	25J		50m	25	200			Si	S14h
7	240E20	200	240	150C	7.5k	4.0m		190J	1.0	240	25C		50m	25C	200			Si	S83△Ø
8	240F20	200	240	150C	7 5k	4.0m		190J	1.0	240	25C		50m	25C	200			Si	M56a△Ø
9	ST820	200	250	25A	5.0k			190J	1.2	250	25		50m	25	200			Si	Z27
10	ST920	200 *	250	25A	5.0k			190J	1.2	250	25		50m	25	200			Si	Z28
11▼#	251F2S	200	250	50	4.5k			175J	1.45	1.0k	25J							Si	S12f Ø
12	A96B	200	250	70C	3 3k	8.3m		125J	1.25	250	25		16m	70C	200			Si	S120b
13	A97B	200	250	70C	3.3k	8 3m		125J	1.25	250	25		16m	70C	200			Si	S120b
14♦#	25C2	200	250	90C	4 0k	10m		150S	1.5	250	90C	8.0m	45m	150	200			Si	S184
15	1N2057	200	250	100C	4.5k§			200C	1.3 †	250	135C		17m	135	160			Si	DO9
16	CH119B	200 †	250	100C	4 0k			200S	1.3	250	25C		13m	100C	200			Si	DO8Ø
17#	70M20	200	250	107B	4.0k	10m		175A	1.5 †	800	175J		20m		200			Si	S8n
18	1N3976	200	250	120C$	4.0k		25 Ø	150A	.60 Ø	250	25A		10mØ	150C	200	400		Si△	DO9△#
19#	BYX33/200	200	250	120A	4 0k	10m		190J	1.8	1.2k	190J		50m	175J	200			Si△	M294Ø
20	1N3736	200	250	130C	4.5k	8.3m		200C	1.1 △	250	130C		16m	130B	200			Si	DO9Ø
21	A90B	200	250	130B	4.5k	8.3m		200J	400mØ	250	130B		16m	130B	200			Si	DO9
22	A91B	200	250	130B	4.5k	8.3m		200J	400mØ	250	130B		16m	130B	200			Si	DO9
23	70S20	200	250	135C	4.5k§	8.3m		200J	1.25	250 †	135C		25mØ	135C	200			Si*	S8bØ
24	70T20△	200	250	135C	4.5k§	8.3m		200J	1.25	250 †	135C		25mØ	135C	200			Si*	S8bØ
25#	S21N200H	200	270	75C	3.4k	10m		175J	1.45	600	25A	30m	80m	175C	200			Si△	M199
26	1N4047	200	275	120C	5.0k			190J	1.35	275	120C		15m	120C	200			Si	DO9Ø
27	CS131B	200 †	275	120C	4 0k			200	1.3	275	25C		16mØ	130C	200			Si	DO9
28	275E20	200	275	150C	7.5k	4.0m		190J	1.0	275	25C		50m	25C	200			Si	S83△Ø
29	275F20	200	275	150C	7.5k	4.0m		190J	1.0	275	25C		50m	25C	200			Si	M56a△Ø
30#	S2EN270	200 %	290	125B	1 5k	20m		160B†	975	340			50m	125B	200			Si*	M307
31#	S2FN270	200 %	290	125B	1.5k	20m		160B†	.975	340			50m	125B	200			Si*	M357c
32#	S2GN270	200 %	290	125B	1.5k	20m		160B†	.975	340			50m	125B	200			Si*	M357a
33♦#	S2HN270	200 %	290	125B	7 2k	10m		160B†	975m	340			50m	125B	200			Si*	M366a
34#	40C2	200	300	100C	5 0k	10m		150J		400			10m	25J				Si*	M366
35	S2EN301	200	300	100B	5 1k	10m	410	100B	650mØ	300	100B		35m	100B	200			Si	M307
36	S2FN301	200	300	100B	5.1k	10m	410	100B	650mØ	300	100B		35m	100B	200			Si	M248
37	S2GN301	200	300	100B	5 1k	10m	410	100B	650mØ	300	100B		35m	100B	200			Si	M248a
38	S2HN301	200	300	100B	5.1k	10m	410	100B	650mØ	300	100B		35m	100B	200			Si	M370
39#	TA3002R	200	300	100C	6.0k	10m			1.4	1.0k			15m	150C	200				S316
40#	T31	200	300	105C	5 0k	10m	350	150C	1.3	300 †	25		4.0m	125C	200			Si△	S246
41	300U20A	200 †	300	120C	5.0k§	8 3m		200J	1 4	300 †	120C		16mØ	120C	200			Si*	DO9Ø
42	MR1233FB	200	300	135C	5.0k	8.3m		190J	.40 Ø	240	150C		35m	150C	200			Si	M228bØ
43	MR1233FL	200	300	135C	5.0k	8.3m		190J	.40 Ø	240	150C		35m	150C	200			Si	M227aØ
44	MR1233SB	200	300	135C	5.0k	8.3m		190J	.40 Ø	240	150C		35m	150C	200			Si	S199bØ
45	MR1233SL	200	300	135C	5.0k	8.3m		190J	40 Ø	240	150C		35m	150C	200			Si	S87cØ
46#	30C2	200	300	150	4.5k							810m	4.5	150	1 5				
47#	S2EN290	200 %	310	125B	1.6k	20m		160B†	.975	340			50m	125B	200			Si*	M307
48#	S2FN290	200 %	310	125B	1.6k	20m		160B†	975	340			50m	125B	200			Si*	M357c
49#	S2GN290	200 %	310	125B	1.6k	20m		160B†	.975	340			50m	125B	200			Si*	M357a
50♦#	S2HN290	200 %	310	125B	7.2k	10m		160B†	975m	340			50m	125B	200			Si*	M366a
51#	S2EN310	200 %	330	125B	1.7k	20m		160B†	.90	400			50m	125B	200			Si*	M307
52#	S2FN310	200 %	330	125B	1 7k	20m		160B†	.90	400			50m	125B	200			Si*	M357c
53#	S2GN310	200 %	330	125B	1 7k	20m		160B†	.90	400			50m	125B	200			Si*	M357a
54#	S2HN310	200 %	330	125B	1.7k	20m		160B†	.90	400			50m	125B	200			Si*	M366a
55#	S2EN300	200 %	340	125B	2.0k	20m		160B	900m	340			50m	125	200			Si*	M307
56▼#	S2HN300	200 %	340	125B	7.2k	10m		160B	900m	340			50m	125	200			Si*	M307
57#	S2EN350	200 %	370	125B	2 0k	20m		160B†	.90	400			50m	125B	200			Si*	M307
58#	S2FN350	200 %	370	125B	2.0k	20m		160B†	.90	400			50m	125B	200			Si*	M357c
59#	S2GN350	200 %	370	125B	2 0k	20m		160B†	.90	400			50m	125B	200			Si*	M357a
60♦#	S2HN350	200 %	370	125B	7 8k	10m		160B†	900m	400			50m	125B	200			Si*	M366a
61	A396B	200	400	70C	3.3k	8.3m		125C	1.3 Ø	400	25		16m	70C	200			Si	M377a
62	1N1479	200	400	120C	8 0k			190J	1 1	520	25C		75m	25C	200			Si	M56b△
63	1N3587	200	400	120C				190J	1.1	520	25C		75m	25C	200			Si	S83a△
64	A390B	200	400	145	4.5k			200J	.40	400	130C		16m	130C	200			Si△	M377a
65	MR1243FB	200	400	150C	8 0k	8 3m		190J	.40 Ø	400	150C		50m	150C	200			Si	M227bØ
66	MR1243FL	200	400	150C	8 0k	8 3m		190J	.40 Ø	400	150C		50m	150C	200			Si	M228aØ
67	MR1243SB	200	400	150C	8 0k	8.3m		190J	.40 Ø	400	150C		50m	150C	200			Si	S199cØ
68	MR1243SL	200	400	150C	8.0k	8.3m		190J	.40 Ø	400	150C		50m	150C	200			Si	S87dØ
69	450E20	200	450	150C	12k	4 0m		190J	1.1	450	25C		75m	25C	200			Si	S83a△Ø
70	450F20	200	450	150C	12k	4 0m		190J	1 1	450	25C		75m	25C	200			Si	M56b△Ø
71	783D	200	485	130C	5 0k	8 3m		190J	1 9	400	130C		10mØ	130C	200			Si	
72#	S2GR311	200	490	100B	7 5k			175J	670mØ	490			25m		200			Si△	M522
73#	S2HR311	200	490	100B	7 5k			175J	670mØ	490			25m		200			Si△	M523
74	500UDF20A	200 †	500	130C	9 0k§	8.3m		200J	1.35 †	500 †	130C		30m	130C	200			Si	M448$
75	A295B	200	500	130C	7.0k	8.3m		200J					15mØ	130C				Si	S132a
76	A296B	200	500	130C	7 0k	8.3m		200J					15mØ	130C				Si	S247
77	784D	200	650	150C	8 0k	8.3m		190J	1.3	500	150C		10mØ		200			Si	
78	MR1263	200	650	150C	12k	8 3m		190J	.40 Ø	650	150C		100m	150C	200			Si	M228cØ
79	MR2082HA	200 †	750	150C	12k	8.3m		150A	.50 Ø	750	150C	4 0m	80m	150C	200			Si△	M228c#Ø
80#	S2BR501	200	830	100B	16k	10m	850	165J	470mØ	800			20m	100B	200			Si△	M429Ø
81	A540B	200	1.0k		10k			200J	1.08		150C		50m	200J	300			Si△	M463
82	MR1293	200 $	1 0k	150C	18k	8.3m		190C	.40 Ø	1.0k	150C		200m	150C	140			Si△	M306†
83	MR2102HA	200 †	1100	150C	18k	8.3m		150A	50 Ø	1 1k	150C	5 0m	100m	150C	200			Si△	M427#Ø
84	A570B	200	1.5k	75C	15k	8 3m		200J	400mØ		130C		50m	200J	200			Si	M463
85	LA300	210	75	50A	35			150C	1.0	.75	25A	2.0u				399			A1ew
86	LAA300	210	1 0	50A	50			150C	90	1.0	25A	2.0u				399			A1bc
87	LAB300	210	2 0	50A	80			150C	1.0	2.0	25A	15u				399			A1bc
88	LAC300	210	3 0	25A	300			150C	1.0	3.0	25A	45u				399			A1ey
89#	B4Y20-210M	210	20	25A	80 †			150S										Si	M479a
90	1N250C	220	20	150C	350			175C	.60	20	25		3.4m	150C	220			Si	DO5△
91	CD1123	225 *	.20	25$				200A				200n			225			Si	A1bz
92	1N645	225	40	25A	3 0	15m	.60	150A	1 0	40	25	200n	15u	100	225			Si△	A1
93#	1S111Ø	225	.40	25A	8 0			150A	1 0	.40	25A	20u	01m	100	225			Si△	A1
94	MT020	225	50	25A	10		.50	175A	1 0	50 Ø	25A	200n	15u	150A	225			Si	A60e
95	MB252	225	75	25	15	8 3m	2 0	175A	11	40 Ø	25	200n	15u	100	225			Si	A60f
96	UT211	225	75	25A	15		1 0	175A	1.0	.40	25	200n	15u	100A	225			Si	A146f
97	DI645	225	75	75A$	25			150A	1.2	1.2	25	200n	15u	100	225			Si	A1bn
98▼#	SSiE2715	225	12	110C	250	10m		110	1.35	23	25J		2 0m	110J				Si△	M324a
99▼#	SSiE2815	225	12	110C	250	10m		110	1 35	23	25J		2.0m	110J				Si△	M324a
100	JAN1N538	240 *	.25	150A$	15	8 0m		150A	1 1	50	25A	10u	35mØ	150A	200			Si	A6d
101#	S3M2	240	60	25A	8.0		7.3	125				1 0u	.05m	125J	240			Si△	DO14
102	JAN1N3611	240	1 0	100A	30	8.3m		175A	1.1 †	1 0	25	1 0u	300u	150A	200			Si	A1rt
103#	S3CN1	240	1 5	40A	45		1.7	150A				10u	25m	150J	240			Si△	A31n
104	JAN1N1614,R	240 *	10	25C	100	8 3m		150C	1.5 †	15	25	50u	.50m	150C	200			Si	DO4
105	JAN1N1186,R	240	35	150C	500	8 3m		150A	1.4 †	110	25	20u	3.0m	150C	200			Si	DO5
106#	S3BR25	240 †	40	120B	250	20m		140B	1.2	40			20m		240			Si*	S122Ø
107#	S3CR25	240 †	40	120B	250	20m		140B	1.2	40			20m		240			Si*	S123Ø
108#	S3DR25	240 †	40	120B	250	20m		140B	1.2	40			20m		240			Si*	S125Ø
109#	S3ER25	240 †	40	120B	250	20m		140B	1.2	40			20m		240			Si*	S124Ø
110#	S3BR30	240 †	44	125B	250	20m		140B	1.1	44			16m		300			Si*	S122Ø

SYMBOLS AND CODES EXPLAINED IN INTERPRETER

5. RECTIFIERS

IN ORDER OF (1) PIV, (2) MAX AVG FWD CURRENT (3) TEMPERATURE, and (4) TYPE No.

LINE No.	4 TYPE No.	1 PIV (V)	MAX AVG FWD DC CURRENT 2 Io (A)	3 at TEMP (°C)	MAX RATINGS @ 25°C SURGE CUR. PEAK 1 Cy (A)	PULSE WIDTH (s)	DISS. (W)	MAX. TEMP (°C)	MAXIMUM FORWARD VOLTAGE DROP Vf (V)	at If (A)	at TEMP (°C)	MAX. REVERSE CURRENT Ir @25°C & Vr (A)	Ir at T & Vr (A)	TEMP T (°C)	TEST VOLT Vr (V)	AVALANCHE RATINGS MAX V BKDN. (V)	MIN SLOPE (A/V)	MAT.	DESCRIPTION DWG. No.
1#	S3CR30	240 †	44	125B	250	20m		140B	1 1	44			16m		300			Si*	S123Ø
2#	S3DR30	240 †	44	125B	250	20m		140B	1 1	44			16m		300			Si*	S125Ø
3#	S3ER30	240 †	44	125B	250	20m		140B	1 1	44			16m		300			Si*	S124Ø
4	JAN1N3289,R	240	75	150C	1 6k	8.3m		200C	1 4	235	25C		30m	200C	200			Si	Z20
5#	S3AN70	240 †	77	115B	450	20m		150B	1.0	70			30m		300			Si	F19
6#	S3BR70	240 †	77	115B	450	20m		150B	1.0	70			40m		300			Si	F19
7	JAN1N3263,R	240	160	125	2 0k	8.3m		175C	1 4 †	500	25	80m	15m	150	200			Si	DO9Ø
8#	S3AN125	240 †	175	125B	1 1k	20m		150B	1.1	175			30m		300			Si	F19
9	JAN1N3164,R	240	175	150C	3.0k	8.3m		175C	1 4 †	750	25	50m	40m	175C	200			Si	DO9Ø
10	G5D3	250		150C	1.5k			175J	1 3	200	25C		5.0m	150C	250			Si	DO8
11#	1S204	250	10	25	40	1		150	1.2	10	25A	10u		25A	200			Si*	A1ce
12	CD1126	250	.20	25§	2.5			200A					100uØ	100A	250			Si	A1bz
13	MC025	250	20	25A§	1 0			200J	1.0	.20	25A		02m	100A	250			Si△	A2a
14	PS025	250	200m	25A	3 2	10m		200A	1.0	100m	25A		100uØ	100A	250			Si	A60p
15	1N2017	250	20	150A§				175A	1.5	50	25	1 0u	.50mØ	150	250			Si	DO12
16	1N3076	250	20	150A§				175J	1 5	.50	25		50m	150	250			Si	A84
17#	1S208/2SJ2A	250	40	25	1 5	1		150	1.2	.50	25A	20u		25A	200			Si△	A164
18	AM425	250	.40	25A				150A	1.2	.40	25A		30mØ	150A	250			Si	DO7
19	PS425	250	40	25A	3 3	10m		200A	1 5	.50	25A		.50mØ	150A	250			Si	A60p
20	PS125	250	50	30A	3 3			200A	1 5	50	25A		50mØ	150A	250			Si	A47
21	ED3002	250 *	50	50	20	8.3m	1 0	100A	1.5 △	1.0	25	10u	03m	100	200			Si△	A1bk
22#	DG11	250	50	75A§	15			75J	25	50	25	500u			250			Ge	S113
23	1N2076	250	.75	25A§									.25m	100A	250			Si	A53
24	PT525	250	75	25A	15	8.0m		125A	1 5	50	25A		.50mØ	100A	250			Si	DO2
25	1N1648	250 †	75	50A	15			165A	.50 Ø	.25	150A		.30mØ	150A	250			Si	A53
26	ED3002A	250 *	75	50	25	8.3m	1 0	100A	1 3 △	1.0	25	10u	.03m	100	200			Si△	A1bk
27	AM025	250	75	150A				150A	1 0	25m	25A		300uØ	150A	250			Si	DO7
28	UR125Ø	250	1 0	25A	25	8 3m			1 0	1 Ø	25A	3 0u	05m	100A	250			Si	A146f
29#	SJ203H	250	1 0	30A	32	10m		150J	1 0	750m	25A	10u	50u	120A	250			Si△	A31n
30	ED3002B	250 *	1 0	50	30	8 3m	1 0	100A	1 1 △	1.0	25	10u	.03m	100	200			Si△	A1bk
31	E1D3	250	1 0	150	200			175	1 3	1.0	150	10u	1.0m	150	250			Si	DO4
32	UR225Ø	250	2 0	25A	40	8.3m			1 0	2 Ø	25A	3 0u	05m	100A	250			Si	A146f
33	E2D3	250	3.0	150	200			175	1.3	3 0	150	10u	1.0m	150	250			Si	DO4
34	1N1124A	250	3 3	50B	25			175B	1.1	1 0	25B	10u	20m	150B	200			Si	DO4
35	JAN1N1124A,RA	250	3 3	50C	25	8 3m		150C	2.2 †	10	25C	5 0u	20m	150C	200			Si	DO4Ø
36	E3D3	250	5.0	150	200			175	1 3	5.0	150	10u	1.0m	150	250			Si	DO4
37	F1D3	250	5.0	150C	200			175J	1.3	30	25C		1 0m	150C	250			Si	DO5
38	E4D3	250	6 0	150	200			175	1 3	6 0	150	10u	1 0m	150	250			Si	DO4
39	KR602EA	250	6 0	150S§	75			175S	1.2	6.0	150S		1 0m	150S	250			Si	DO10
40	KS602EA	250	6 0	150C§	75			175C	1 2 △	6 0	25		1.0mØ	150C	250			Si△	DO4
41	E5D3	250	8 0	150	200			175	1.3	8.0	150	10u	1.0m	150	250			Si	DO4
42	1N2797	250	8 5	25A	75			175A	1 25	15	150C		5 0m	150C	250			Si	DO5
43	1N2022	250 †	10	150C	110	8 3m		175C	1 5	25	25		5 0m	150C	250			Si	DO5
44	E6D3	250	10	150	200			175	1 3	10	150	10u	1.0m	150	250			Si	DO4
45	F2D3	250	10	150C	200			175J	1 3	30	25C		1.0m	150C	250			Si	DO5
46	E7D3	250	12	150	200			175	1 3	12	150	10u	1.0m	150	250			Si	DO4
47	UR123EA	250	12	150S§	240			175S	1 2	12	25		3.0m	150S	250			Si	DO10
48	US123EA	250	12	150C§	240			175C	1 2 △	12	25A		3 0mØ	150C	250			Si△	DO4
49	F3D3	250	15	150C	200			175J	1 3	30	25C		1 0m	150C	250			Si	DO5
50	2025	250	16 5	25A	200		4 0 Ø	50A	60 Ø	19	25A		1 0mØ	150C	250	500		Si△	DO4△#
51	JAN1N250B,RB	250	20	150C	350	8 3m		150C	1 3 †	60	25C	5 0m	1.5m	150C	200			Si	DO5Ø
52	F4D3	250	20	150C	600			175J	1 3	50	25C		2 0m	150C	250			Si	DO5
53	2125	250	22	120C	200			175J	60 Ø	22	25A		1.0mØ	150C	250	500		Si△	DO4△
54	S2125	250	22	120C	200		1 ØØ	175J	.60 Ø	22	25A		1 0mØ	150C	250	500		Si△	DO4△
55	303E	250 *	22	135C	12		30	190J	1 4	30	25	10u			250			Si	S29
56	F5D3	250	25	150C	600			175J	1.3	90	25C		2 0m	150C	250			Si	DO5
57	3125	250	30	25A	200		4.0 Ø	150A	60 Ø	34	25A		1 0mØ	150C	250	500		Si△	DO5#△
58	G3D3	250	30	150C	1 5k			175J	1 3	200	25C		5.0m	150C	250			Si	DO8
59	3225	250	33	25A	600		7 0 Ø	150A	60 Ø	45	25A		2 0mØ	150C	250	500		Si△	DO5△#
60	302E	250 *	35	135C	210		55	190J	1.2	50	25	20u			250			Si	S29
61	TR252	250	37	65C				175S	1 5	50	25C		5 0mØ	150C	250			Si	DO5
62	G4D3	250	40	150C	1 5k			175J	1 3	200	25C		5 0m	150C	250			Si	DO8
63	1N2450	250	45	60C	300			175B	1 1	20	25		5 0mØ	150B	250			Si△	DO5
64	S3425	250	50	120C	600		2 ØØ	175J	60 Ø	50	25A		2 0mØ	150C	250	500		Si△	DO5△
65	1N1681	250	50	150C	700	8.3m		165C	1 2	1 1	150C		25m	150C	250			Si	S8q
66	MR1204	250	50	150C	800	8 3m		190J	40 Ø	50	150C		10m	150C	250			Si△	M226
67	1N2462	250	60	60C	450			175B	1 1	30	25		5 0mØ	150B	250			Si△	DO5
68	1N2132	250	60	100C	700 §			175C	1 4	60	115C		30m△	175C	200			Si	DO5
69	1N2132A	250	60	100C	900 §			200C	1.3	60	140C		30m△	200C	200			Si	DO5
70	H5D3	250	60	150C	3 0k			175J	1.3	300	25C		10m	150C	250			Si	DO9
71	TR253	250	65	75C				175C	1 5	100	25C		5 0mØ	150C	250			Si	DO5
72	70H25	250	70	125C	1 2k§	8 3m		200J	1 3	70 †	125C		10mØ	125C	250			Si*	DO5Ø
73	70H25A	250 †	70	125C	1.2k§	8.3m		200J	1 3	70	125C		10mØ	125C	250			Si△	DO5Ø
74	300E	250 *	70	150C	1.2k			190J	1.2 Ø				30m	190J	250			Si	S14b
75	J4D3	250	70	150C	4.0k			175J	1.2	300	25C		10m	150C	250			Si	DO9
76	J5D3	250	70	150C	4.0k			175J	1.2	300	25C		10m	150C	50			Si	DO9
77	1N2430	250	100	75C	950			175B	1.1	50	25		10mØ	150B	250			Si△	DO8
78	MR1214SB	250	100	135C	2.0k§	8.3m	160	190J	400mØ	80 †	150C		15m	150C	250			Si△	S199
79	MR1214SL	250	100	135C	2.0k§	8.3m	160	190J	400mØ	80 †	150C		15m	150C	250			Si△	S87a
80	MR1814SB	250	100	135C	2.0k§	8 3m	160	190J	400mØ	80 †	150C		15m	150C	250			Si△	S199m
81	MR1814SL	250	100	135C	2.0k§	8.3m	160	190J	400mØ	80 †	150C		15m	150C	250			Si△	S87f
82	150L25A	250 †	100	150C	3.0k§	8 3m		200J	1.2	150 †	150C		16mØ	150C	250			Si*	DO30Ø
83	S4225	250	104	120C	1.5k		2 5 ØØ	175J	.60 Ø	104	25A		5.0mØ	150C	250	500		Si△	DO8△
84	45L25	250	150	70A	3 0k§	10m		190J	52 Ø	150 †			20mØ		250			Si*	DO30Ø
85	1N2440	250	150	75C	1 2k			175B	1.1	70	25		10m	150B	250			Si△	DO8
86	150K25A	250 †	150	150C	3.0k§	8.3m		200J	1 2	150 †	150C		16mØ	150C	250			Si*	DO8Ø
87	S5125	250	160	120C	2.2k		3 ØØ	175J	60 Ø	160	25A		10mØ	150C	250	500		Si△	DO9△
88	1N3264	250 †	160	125C	2.0k			190J	1.25	160	125C		12m	125C	250			Si	DO9Ø
89	322E	250	160	125C	1 3k			190J	1.3	210	25		40m	25	250			Si	S8e
90	411E	250	200	130	3.0k	8.3m		200J	1.5	125	130C		8.0mØ	130C	250			Si	DO8
91	MR1224FB	250	200	138C	3 6k	8.3m		190C	.40 Ø	160	150C		20m	150C	250			Si△	M227
92	MR1224FL	250	200	138C	3 6k	8.3m		190C	.40 Ø	160	150C		20m	150C	250			Si△	M228
93	MR1224SB	250	200	138C	3 6k	8.3m		190C	.40 Ø	160	150C		20m	150C	250			Si△	S199a
94	MR1224SL	250	200	138C	3 6k	8.3m		190C	.40 Ø	160	150C		20m	150C	250			Si△	S87b
95	410E	250	220	110C	3 0k	8.3m		190J	1.3	150	110C		10mØ	110	250			Si	DO8
96	1N3165	250 *	240	120C	3 0k			190J	1.25	240	25C		16m	125C	250			Si	S14f2
97	339E	250 *	240	120C	1.8k			190J	1.25	300	25J		50m	25	250			Si	S14f
98	1N2058	250	250	100C	4.5k§			200C	1.3 †	250	135C		17m	135	200			Si	DO9
99	S5325	250	250	120C	4.0k		4 ØØ	175J	.60 Ø	250	25A		10mØ	150C	250	500		Si△	DO9△
100	70U25A	250 †	250	130C	4 5k§	8.3m		200J	1.3	250 †	130C		16mØ	130C	250			Si*	DO9Ø
101	70S25	250	250	135C	4.5k§	8.3m		200J	1.25	250 †	135C		25mØ	135C	250			Si*	S8b2Ø
102	70T25	250	250	135C	4 5k§	8.3m		200J	1.25	250 †	135C		25mØ	135C	250			Si*	S8b1Ø
103	1N4048	250	275	120C	5.0k			190J	1.35	275	120C		15m	120C	250			Si	DO9Ø
104	300U25A	250 †	300	120C	5 0k§	8.3m		200J	1.4	300 †	120C		16mØ	120C	250			Si*	DO9Ø
105	MR1234FB	250	300	138C	5.0k	8 3m		190C	.40 Ø	240	150C		35m	150C	250			Si△	M227a
106	MR1234FL	250	300	138C	5.0k	8 3m		190C	.40 Ø	240	150C		35m	150C	250			Si△	M228b
107	MR1234SB	250	300	138C	5.0k	8.3m		190C	.40 Ø	240	150C		35m	150C	250			Si△	S199b
108	MR1234SL	250	300	138C	5.0k	8.3m		190C	.40 Ø	240	150C		35m	150C	250			Si△	S87c
109	MR1244FB	250	450	145C	8 0k	8.3m		190C	.40 Ø	400	150C		50m	150C	250			Si△	M227b
110	MR1244FL	250	450	145C	8 0k	8.3m		190C	.40 Ø	400	150C		50m	150C	250			Si△	M228a

SYMBOLS AND CODES EXPLAINED IN INTERPRETER

5. RECTIFIERS

IN ORDER OF (1) PIV, (2) MAX AVG FWD CURRENT (3) TEMPERATURE, and (4) TYPE No.

LINE No.	TYPE No.	1 PIV (V)	MAX AVG FWD DC CURRENT 2 Io (A)	3 at TEMP (°C)	MAX RATINGS @ 25°C SURGE CUR. PEAK 1 Cy (A)	PULSE WIDTH (s)	DISS. (W)	MAX. TEMP (°C)	MAXIMUM FORWARD VOLTAGE DROP Vf (V)	at If (A)	at TEMP (°C)	MAX. REVERSE CURRENT Ir @25°C & Vr (A)	Ir at T & Vr (A)	TEMP T (°C)	TEST VOLT Vr (V)	AVALANCHE RATINGS MAX V BKDN (V)	MIN SLOPE (A/V)	DESCRIPTION MAT.	DWG. No.
1	MR1244SB	250	450	145C	8 0k	8.3m		190C	.40 Ø	400	150C		50m	150C	250			Si△	S199c
2	MR1244SL	250	450	145C	8.0k	8 3m		190C	.40 Ø	400	150C		50m	150C	250			Si△	S87d
3	784E	250	650	150C	8 0k	8.3m		190J	1.3	500	150C		10m⊘		250			Si	
4	MR1264	250	700	145C	12k	8 3m		190C	40 Ø	650	150C		100m	150C	50			Si△	M228c
5	MR1294	250 $	1000	150C	18k	8.3m		190C	40 Ø	1k	150C		200m	150C	175			Si△	M306†
6	JAN1N645	270	400m	25A	5 0 §	8 3m		150A	1 0 †	400m	25	25n	15u	150A	225			Si	A1dd
7#	0302	270 Ø	.50	50A	30			150J	1.2 △	50	25A	1 0u			200			Si*	A9h△
8#	0312	270 Ø	50	50A	30			150J	1 2 △	50	25A	10u			200			Si*	A9h△
9#	0322	270 Ø	.50	50A	30			150J	1.2 △	50	25A	10u			200			Si*	A9h△
10#	1S689A	270	6 0	25A	25			91S	.60	5.0	25A							Ge*	C63b
11	LA400	280	75	50A	35			150C	1 0	75	25A	2 0u				499			A1ew
12	BY179†	280	1 0	40A	25	10m	2.0	125J										Si△	M502
13	LAA400	280	1 0	50A	50			150C	90	1 0	25A	2 0u				499			A1bc
14#	B4Y2-280M	280	2 0	25A	10 †			150J										Si	C113
15	LAB400	280	2 0	50A	80			150C	1 0	2 0	25A	15u				499			A1bc
16	LAC400	280	3.0	25A	300			150C	1 0	3 0	25A	45u				499			A1ey
17#	B4Y5-280M	280	5 0	25A	20 †			150J										Si	C113
18#	B4Y10-280M	280	10	25A				150S										Si	M479
19#	B4Y20-280M	280	20	25A	80 †			150S										Si	M479a
20	G5E3	300		150C	1 5k			175J	1 3	200	25C		5.0m	150C	300			Si	DO8
21	1N882	300	05	25A$	50			200S	60	05			.02m		300			Si	A1bz
22	P1G5	300	05	50	30			175	1 0	05	25	10u	.50m	100	300			Si	M343
23	1N93	300 Ø	075	55A$	25			95A	.18 Ø	08	55A		.60m⊘	55A	300			Ge*	DO3
24	1N315	300	075	55A	25			85A	.48	.10	55A		42m	55A	300			Ge	DO3
25	1N681	300	075	150A	3 0			175A	1 0	20	25A		20m	150A	300			Si	DO7
26	1N871	300	10	25A$	1 0			200S	60	10			02m		300			Si	A1bz
27	10R3B	300	10	25	60			175	2 0	10	25	5 0u	50m	150	300			Si	
28	S203	300	10	25$	15				1 2	15	25	100u			300			Si	A54
29	P2G5	300	10	50	30			175	1.0	10	25	10u	50m	100	300			Si	M343
30	1N860	300	15	25A$	1 5			200S	60	15			02m		300			Si	A1bz
31	S93△	300	15	25$	25				90	12	25	600u			300			Si	A54
32	1N682	300	15	150A	5 0			175A	1 0	.40	25A		20m	150A	300			Si	DO7
33	A5D2	300 †	15	200A	45			200A	1 0	.75	25	1 0u△	20m⊘	150	300			Si	A84
34	JAN1N93A	300 #	175	40A	25	8 3m		90A	55	50	25	400u			200			Ge	DO3
35	1N849	300	.20	25A$	2 0			200S	60	20			02m		300			Si	A1bz
36	A1D1	300	20	25	60			175A	50		150	1 0u	.50m	150	300			Si	A84a
37	A1D5	300	20	25	60			175A	.50		150	5 0u	.50m	150	300			Si	A84a
38	A1D9	300	20	25	60			175A	.50		150	10u	50m	150	300	100	200u	Si	A84a
39	B1D1	300	20	25	60			175A	50		150	1.0u	.50m	150	300			Si	A1rx
40	B1D5	300	20	25	60			175A	50		150	5.0u	50m	150	300			Si	A1rx
41	B1D9	300	20	25	60			175A	50		150	10u	.50m	150	300	100	200u	Si	A1rx
42#	BY183-300	300	200m	25A	2 0	10m		100J	1.2	100m		1 0u			300			Si△	DO7
43	CD1127	300	20	25$	2 5			200A					100u⊘	100A	300			Si	A1bz
44	PS030	300	200m	25A	3 2	10m		200A	1 0	100m	25A		100u⊘	100A	300			Si	A60p
45	TM33	300	.20	25C				125C	2 0	20	100C		30m⊘	100C	300			Si	S145
46	K1D5	300	.20	50	60			150C	2 0	20	25	5 0u	.50m	100C	300			Si	
47	P3G5	300	20	50	30			175	1.0	.20	25	10u	.50m	100	300			Si	M343
48	S93⊘	300 Ø	20	85A$	5.0 §			100S	1 5	20	85A		1.0m	85A	300			Si	DO2
49	AM33	300	20	100C$	8 0 §	8 0m		125A	1 25	20	25C		30m⊘	100C	300			Si	DO4
50	1N335	300	20	150C$	5 0			175B	2 0	40	25		.20m⊘	150C	300			Si	DO4
51	1N344	300	20	150C$	5 0			175B	2 0	40	25		.50m⊘	150C	300			Si	DO4
52	1N2018	300	.20	150A$				175A	1 5	50	25	1.0u	.50m⊘	150	300			Si	DO12
53	1N3077	300	20	150A$				175J	1 5	50	25		.50m	150	300			Si	A84
54	CODI553	300	25	25$	20			100	1 1	40	25	10u			300			Si	A52g
55	S93H	300 *	.25	85A$	5 0 §			150S	1 5	25	85A		50m	85A	300			Si	DO2
56	1N532	300	30	25A$	3 0	3 0m		150A	2 0	30	25A	10u			300			Si	DO3
57	1N1704	300	30	50A	8 0			125A	1 7	1 0	25A		30m⊘	100A	300			Si	A53
58	P4G5	300	30	50	30			175	1 0	30	25	10u	50m	100	300			Si	M343
59	1N442	300 †	.30	100A	15			165A	1 5	.30	25	1 0u			300			Si	DO2
60	1N603	300	.30	100A	2 0	100m		170S	1 5	.20	25	25u△			300			Si	DO1
61	1N603A	300	30	100A	2.0	100m		170S	1 5	40	25	1 0u△			300			Si	DO1
62	1N646	300	40	25A	3 0	15m	.60	150A	1.0	40	25	200n	15u	100	300			Si△	A1
63#	1S112⊘	300	.40	25A	8 0			150A	1.0	.40	25A	.20u	.01m	100	300			Si△	A1
64	AM430	300	40	25A				150A	1.2	40	25A		30m⊘	150A	300			Si	DO7
65#	BYX60-300	300	400m	25A	2 5	1 0	600m	125A	1 2	400m	25A	1.0u	50u	100A	300			Si△	DO7
66	PS430	300	40	25A	3 3	10m		200A	1 5	50	25A		50m⊘	150A	300			Si	A60p
67	K2D5	300	40	50	60			150C	2 0	.40	25	5.0u	.50m	100C	300			Si	
68	P5G5	300	40	50	30			175	1 0	40	25	10u	50m	100	300			Si	M343
69	AM32	300 †	40	100C$	10 §	8 0m		125A	1 25	40	25C		.30m⊘	150C	300			Si	DO4
70	1N334	300	40	150C$	10			175B	2 0	.80	25		20m⊘	150C	300			Si	DO4
71	1N343	300	.40	150C$	10			175B	2 0	80	25		50m⊘	150C	300			Si	DO4
72#	SG305	300	45	50A	10			150A	1 1	50	25A	50u	30m	150A	300			Si△	C42
73	A2D4	300	475	25	40	8 3m		175	1 2	.50	25	1.0u	50m	150	300			Si	A84
74	1N1254	300	50	25A	15			165A	1 0 Ø	.50	25A		50m	125A	300			Si	A53
75	1N2083	300	.50	25$	15			150A	.75 Ø	.50	25	350u⊘			300			Si	A53
76	CODI5534	300	50	25$	20			100	1 1	40	25	10u			300			Si	M45
77	MB261	300	50	25	10	8 3m	2 0	175A	1 0	.2 ⊘	25	1 0u	06m	100	300			Si	A60f
78	MT030	300	.50	25A	10		.50	175A	1 0	50 ⊘	25A	200n	15u	150A	300			Si	A60e
79	MT030A	300	50	25A	10		50	175A	1.0	.50 ⊘	25A	25n	5 0u	150A	300			Si	A60e
80	S31	300	50	25$	15				1.2	80	25	100u			300			Si	A54
81	WR300	300	50	25A	3 3			200	1.25	.50	25A		10m	100	300			Si	DO7
82	PS130	300	50	30A	3 3			200A	1 5	50	25A		50m⊘	150A	300			Si	A47
83	5E3	300	500m	50	50 §			175	1.1	500m	50	2.0u	50u	100	330			Si△	DO27
84	.5J3	300	500m	50	50 §			175	1 1	500m	50	2.0u	50u	100	330			Si△	DO15
85#	30AS	300	50	50A	15			100A	1.15	50	25A	10u			300			Si△	DO3
86	P6G5	300	50	50	30			175	1.0	50	25	10u	50m	100	300			Si	M343
87	1N1710	300	50	55A	10			125A	1.3	1.0	25A		.40m⊘	150A	300			Si	A53
88#	1S313	300	.50	70	25	10m		150	1 1	1.0	25	10u		25	300			Si	TO1
89	1T503	300 †	50 Ø	85A	35			100A	1.2	.30	25	10u	25m	100	300			Si	A3x
90	2T503	300 †	50 Ø	85A	35			100A	1.2	.30	25	10u	25m	100	300			Si	DO1
91	3T503	300 †	50 Ø	85A	35			100A	1 2	30	25	10u	.25m	100	300			Si	DO13
92	4T503	300 †	50 Ø	85A	35			100A	1.2	.30	25	10u	.25m	100	300			Si	DO7
93	ERD300	300 †	50 Ø	85	35			100A	1 2	.30	25	10u	.25m	100	300			Si	M166
94	1N552	300 †	50	100A	4 0	3.0m		150A	1.5	.50	25A	1.5u			300			Si	DO4
95	1N1032	300	50	100A	30 §	4 0m		150A	1.5	50	25A	200u			300			Si	A73b
96	1N1083	300	.50	100A	30 §	4 0m		150A	1 5	500	25A	2 0m			300			Si	F22
97#	1S559	300	.50	100A	15			150A	1.1	.50	25	50u			300			Si△	C42
98	30S5△	300	500m	100				175J	1 3	1 8	25C		2 0m	25C	300			Si	S41b
99	S223	300	.50	100$	15				1 0	.80	25	2.0u	300u	150	300			Si	A54
100	S253	300	.50	100$	60				1.2	80	25		500u	100	300			Si	A54
101	1N3546	300	60	25A	15			200A	1.0	.50	25A	.20u	75m	175A	300			Si	A1
102	A2D1	300	60	25	60			175A	50		150	1.0u	50m	150	300			Si	A84a
103	A2D5	300	.60	25	60			175A	50		150	5.0u	.50m	150	300			Si	A84a
104	A2D9	300	60	25	60			175A	50		150	10u	.50m	150	300	100	200u	Si	A84a
105	B2D1	300	60	25	60			175A	.50		150	1.0u	.50m	150	300			Si	A1rx
106	B2D5	300	60	25	60			175A	50		150	5.0u	50m	150	300			Si	A1rx
107	B2D9	300	60	25	60			175A	50		150	10u	50m	150	300	100	200u	Si	A1rx
108	ER31	300	.60	25A	15			150A	1 25	50	25		75u	100	300			Si	A3t
109	1N1694	300 †	60	50A	20			115A	60	25	100A		50m⊘	100A	300			Si	DO3
110#	1S148	300	60	50A	20			120S	1.2	.60	25A	30u	25m	100A	300			Si△	A50

SYMBOLS AND CODES EXPLAINED IN INTERPRETER

5. RECTIFIERS

IN ORDER OF (1) PIV, (2) MAX AVG FWD CURRENT (3) TEMPERATURE, and (4) TYPE No.

LINE No.	4 TYPE No.	1 PIV (V)	MAX AVG FWD DC CURRENT 2 Io (A)	3 at TEMP (°C)	MAX RATINGS @ 25°C SURGE CUR. PEAK 1 Cy (A)	PULSE WIDTH (s)	DISS. (W)	MAX. TEMP (°C)	MAXIMUM FORWARD VOLTAGE DROP Vf (V)	at If (A)	at TEMP (°C)	MAX. REVERSE CURRENT Ir @25°C & Vr (A)	Ir at T & Vr (A)	TEMP T (°C)	TEST VOLT Vr (V)	AVALANCHE RATINGS MAX V BKDN. (V)	MIN SLOPE (A/V)	MAT.	DESCRIPTION DWG. No.
1	K3D5	300	60	50	60			150C	2 0	60	25	5.0u	.50m	100C	300			Si	
2	P7G5	300	60	50	30			175	1 0	60	25	10u	50m	100	300			Si	M343
3	SD93	300	60	50A	10			125A	1 5	90	25		1 0m	100	300			Si	DO3
4	SM230	300	60	50$	20			150	1 2	95	25	10u			300			Si	A84
5	1N1489	300 †	75	25A	15			140A	.55 Ø	25	125A		30mØ	125A	300			Si*	DO3
6	1N2077	300	.75	25A$									.25m	100A	300			Si	A53
7	1N2106	300 Ø	75	25$				200	1 2	75	25	300u			300			Si△	A53
8	75R3B	300	75	25	60			175	2 0	75	25	5 0u	50m	150	300			Si	
9	A3D1	300	75	25	60			175A	.50		150	1.0u	50m	150	300			Si	A84a
10	A3D5	300	.75	25	60			175A	50		150	5 0u	50m	150	300			Si	A84a
11	A3D9	300	75	25	60			175A	.50		150	10u	50m	150	300	100	200u	Si	A84a
12	B3D1	300	75	25	60			175A	.50		150	1.0u	50m	150	300			Si	A1rx
13	B3D5	300	75	25	60			175A	50		150	5.0u	50m	150	300			Si	A1rx
14	B3D9	300	75	25	60			175A	.50		150	10u	50m	150	300	100	200u	Si	A1rx
15	CODI533	300	75	25$	35			150	1 1	80	25	1 0u			300			Si	A52g
16	CODI613	300	75	25$	35			150	1 1	80	25	1 0u			300			Si	A9j
17	MB253	300	75	25	15	8 3m	2 0	175A	1 0	40 ∅	25	200n	15u	100	300			Si	A60f
18	MB262	300	75	25	15	8 3m	2 0	175A	1 0	.4 ∅	25	1 0u	.06m	100	300			Si	A60f
19	MB272	300	75	25	15	8 3m	2 0	175A	1 2	50 ∅	25	2 0u	75u	100	300			Si	A60f
20	PT530	300	.75	25A	15	8 0m		125A	1 5	50	25A		.50m∅	100A	300			Si	DO2
21	S93A	300	75	25$	25				90	1 2	25	600u			300			Si	A54
22	UT114	300	75	25A	15	8 3m	1 0		1 2	50 ∅	25A	2 0u	75u	100A	300			Si	A146f
23	UT212	300	75	25A	15		1 0	175A	1 0	40	25	200n	15u	100A	300			Si	A146f
24	XS31	300	75	25	15							100u			300			Si	A54
25#	ZR63	300	75	35A	30	10m		150A	1 1	75	25A	10u	15m	100A	300			Si	A42
26	7E3	300	750m	50	60 §			175	1.1	750m	25	2 0u	50u	100	330			Si△	DO27
27	7J3	300	750m	50	60 §			175	1 1	750m	25	2 0u	50u	100	330			Si△	DO15
28	1N442B	300 †	75	50A	15			165A	1 5	75	25A	1 0u	200m	150A	300			Si△	DO3
29	1N539	300	75	50A	15			150A	1 0	50	25A	10u	20m	150A	300			Si△	DO3
30	1N1083A	300	75	50$	35				1 0	1 0	25	10u			300			Si	F22
31	1N1649	300 †	75	50A	15			165A	.50 Ø	25	150A		30mØ	150A	300			Si	A53
32	1N2093	300 †	75	50A	15			100A	50 Ø	50	85A		25mØ	85A	300			Si△	M21
33	1N2612	300	75	50A	30			175A	1 1	50	25A	10u	50m	150A	300			Si	A31a
34	1N4366	300	75	50A	35	2 0m		175	1 1	75	25	1 0u	30m	175	300			Si	DO3
35#	1S42	300	75	50A	25			150J	1 2	1 0	25A	5 0u	25m	150A	300			Si△	DO1
36#	3G8	300	75	50A	15			150A	1 1	75	25A	1.0u			300			Si△	DO3
37	A3D3	300 †	75	50A	35			175A	1 1	50	25	10u△	30m∅	150	300			Si	A84
38	A300	300	75	50	15		1 0	100	1 0	75	25	5 0u			300			Si	A3p
39	D300	300	75	50	15		1 0	175	1 0	75	25	5 0u			300			Si	A50
40	DK753	300	750m	50A	60			175A	1 2	750m	25A	10u	100u	100	300			Si	DO27
41	H300	300	75	50	15		1 0	175	1.0	75	25	5 0u			300			Si	DO3
42	SD93A	300	75	50A	15			125A	1 3	1 2	25		50m	100	300			Si	DO3
43	SM30	300	75	50$	35			175†	1 1	50	25	10u			300			Si	A84
44▼	SM30#	300	750m	50$	35			175†	1 1	500m	25	10u			300			Si	A84
45	TK30	300	75	50A	15			175C	1 1	.50 ∅	25		300u∅	150	300			Si	A84
46	1N153	300 Ø	75	55A$	25	33m		85S	70	50	55A		1 2m	55A	300			Ge	M124
47	1N1441	300	75	55A	30			150A	1 0	75	55A		1 0m	55A	300			Si	A1gz
48	1N2486	300	75	55A	75	4 0m		150	1 0			1 0m			300			Si	A6b
49	1N2861	300	750m	75A	16			125A	1 2	500m	75A		300u∅	100A	300			Si	
50	DI646	300	75	75A	25			150A	1 2	1 2	25	200n	15u	100	300			Si	A1bn
51	MR1337-4	300	75	75A	30 §			175A	1 1	1 0	25A		25m	25A	300			Si	A31a
52	S26	300	75	80A	15				1 2	1 2	25	200u			300			Si	A54
53	S83	300	75	80$	15				1 2	1 2	25	20u			300			Si	A54
54	1N1558	300	75	100C				150	1 4	60	25		1 0m	100A	300			Si	DO2
55	AM030	300	75	150A				150A	1 0	25m	25A		300u∅	150A	300			Si	DO7
56	1N1102	300	77	55A	15	8 0m		175A	1 5	12	25A		30m	150A	300			Si	DO1
57	PE403	300	80	35A$	50			135A	1 1	80	25	10u	.20mØ	85A	300			Si	A3w
58	1N5057	300 †	80	40A	30 §			125A	1 4 †	80	40A		.25m	100A	400			Si	DO29
59#	SR1FM6	300	800m	40A	50			130J	1 2 †§	3 0	25A	10u	300u	130J	300				A1bv
60#	1S1344	300	80	50A	40	8 3m		150J	1 2	3 0	25A	10u∅	50mØ	150J	300			Si△	A89b
61	K4D5	300	80	50	60			150C	2 0	80	25	5 0u	500u	100C	50			Si	
62#	SR1C6	300	800m	50A	40 §	8 3m		150J	1 2	3 0	25A	10u	500u	150J	300			Si△	A34d
63	1N611	300	80	100A	3 0	8 3m		150A	1 5	20	25A	25u△			300			Si	DO4
64	1N611A	300	80	100A	3 0	8 3m		150A	1 5	40	25A	1 0u△			300			Si	DO4
65	A4D1	300	85	25	60			175A	.50		150	1.0u	.50m	150	300			Si	A84a
66	A4D5	300	85	25	60			175A	50		150	5 0u	.50m	150	300			Si	A84a
67	A4D9	300	85	25	60			175A	50		150	10u	.50m	150	300	100	200u	Si	A84a
68	B4D1	300	85	25	60			175A	50		150	1 0u	50m	150	300			Si	A1rx
69	B4D5	300	85	25	60			175A	50		150	5 0u	50m	150	300			Si	A1rx
70	B4D9	300	85	25	60			175A	50		150	10u	50m	150	300	100	200u	Si	A1rx
71#	SSiB0520	300	85	45A	50	10m		150J	1 0	1 0	25J	1 0u			300			Si△	M441
72	SM130	300	85	50$	45			150	1 0	1 5	25	10u			300			Si	A84
73	SM730	300	85	50	35			150A	1.0	50	25	.01u	20m	150	300			Si	A84
74	NS1003	300	1 0		60	8 3m			1 2	1 0		10u			300				
75	100R3B	300	1 0	25	60			175	2 0	1 0	25	5 0u	.50m	150	300			Si	
76	A5D1	300	1 0	25	60			175A	50		150	1 0u	50m	150	300			Si	A84a
77	A5D5	300	1 0	25	60			175A	.50		150	5.0u	50m	150	300			Si	A84a
78	A5D9	300	1 0	25	60			175A	.50		150	10u	50m	150	300	100	200u	Si	A84a
79	B5D1	300	1 0	25	60			175A	50		150	1.0u	.50m	150	300			Si	A1rx
80	B5D5	300	1 0	25	60			175A	50		150	5 0u	50m	150	300			Si	A1rx
81	B5D9	300	1 0	25	60			175A	50		150	10u	50m	150	300	100	200u	Si	A1rx
82#	GJ5M	300	1 0	25A	8 0			70J	1 0									Ge	S33
83	MB246	300	1 0	25	20	8 3m	2 0	175A	1 0	60 ∅	25	1.0u	75u	100	300			Si	A60f
84	S1030	300	1 0	25A	35			175A	50 Ø	25	150A		50mØ	150A	300	550		Si△	A1gf
85	SLA14AB	300	1 0	25	60	8 3m		150A	1 0	1 0	25	1 0u	10m	100	300			Si	A69
86	SLA14C	300	1 0	25	60	8 3m		150A	1 1	1.0	25	5 0u	25m	100	300			Si	A69
87	10C3	300 †	1 0	50A				175A	1 2 △	1 0	25A	10u						Si	A50
88	AA300	300	1 0	50	15		1 0	100	90	1 0	25	5.0u			300			Si	A3p
89#	BYY32	300	1 0	50A	50			150J	1 3	2.0	25J	5 0u			300			Si△	DO13
90	CJ3	300	1 0	50	50			150	1 1	1 0	50	5 0u	200u	100	330			Si△	DO15
91	CL3∅	300	1 0	50A	50			150A	1 1	1 0	50A	5 0u	200u	100A	330			Si△	DO27
92	CM3	300	1 0	50	50			150	1 1	1 0	50	5 0u	200u	100	330			Si△	DO27
93	E3	300	1 0	50	75 §			175	1 1	1.0	25	2 0u	50u	100	330			Si△	DO27
94	EM3	300	1 0	50	75 §			175	1 1	1.0	25	2 0u	50u	100	330			Si△	DO41
95♦#	F14C	300	1 0	50A	45			175J	1 0	1 0	25	50u	300u	100	300			Si	A249a
96	HA300	300	1 0	50	15		1 0	175	90	1 0	25	5 0u			300			Si	DO3
97	J3	300	1 0	50	75 §			175	1 1	1 0	25	2 0u	50u	100	330			Si△	DO15
98	K5D5	300	1 0	50	60			150C	2 0	1 0	25	5 0u	50m	100C	300			Si	
99	TA300	300	1 0	50	15		1 0	100	90	1.0	25	5 0u			300			Si	M21
100	SCA3	300	1 0	55$	50			175	1 2	1 0	25	1.0u	50m	125	300	480		Si	A1bs
101	SEN130	300	1 0	55	50	8.3m		170A	1 0	1 0	25	5 0u	300u	150	300			Si△	DO15
102#	SH4D3	300 Ø	1 0	55A	45	8 3m		115	60 Ø	.50	85		40mØ	85	180			Si	M215
103#	BY126/300	300	1 0	60A	40	10		150J	1 5	5 0	25J	10u			450			Si	DO27
104	1N2861A	300 †	1 0	75A	40			135	1 2	1.0	75A		50m	135	300			Si	DO1
105	5A3	300	1 0	75A	50	8.3m			.95	1 0	25A	10u						Si	DO27
106	5MA3	300	1 0	75	50 §			170A	92	1 0	25		200m	100	300			Si	F29
107	10D3	300	1 0	75A	50	8 3m			95	1 0	25A	10u						Si	DO39
108	CA102FA	300	1 0	75A	15			150A	1 2	1 0	25C		3 0mØ	125C	300			Si	A32
109	CC102FA	300	1 0	75A	15			150A	1 2	1 0	25C		3 0mØ	125C	300			Si	C8
110	CF102FA	300	1 0	75A	1 5			150A	1 2	1 0	25C		3 0mØ	125C	300			Si	F8

SYMBOLS AND CODES EXPLAINED IN INTERPRETER

5. RECTIFIERS

IN ORDER OF (1) PIV, (2) MAX AVG FWD CURRENT (3) TEMPERATURE, and (4) TYPE No.

LINE No	4 TYPE No	1 PIV (V)	MAX AVG FWD DC CURRENT 2 Io (A)	3 at TEMP (°C)	MAX RATINGS @ 25°C SURGE CUR. PEAK 1 Cy (A)	PULSE WIDTH (s)	DISS. (W)	MAX. TEMP (°C)	MAXIMUM FORWARD VOLTAGE DROP Vf (V)	at If (A)	at TEMP (°C)	MAX. REVERSE CURRENT Ir @25°C & Vr (A)	Ir at T & Vr (A)	TEMP T (°C)	TEST VOLT Vr (V)	AVALANCHE RATINGS MAX V BKDN. (V)	MIN SLOPE (A/V)	DESCRIPTION MAT.	DWG. No.
1	CP102FA	300	1 0	75A	15			150A	1.2	1.0	25C		3.0mØ	125C	300			Si	C9
2	1F3	300	1 0	100	50		1 0	150C	1.3	2 0	25	2.0u	50u	100	330			SiΔ	F22
3	1N1038	300	1 0	100A	30 §	4 0m		170C	1.5	1 0	25A	200u			300			Si	S65a
4	1N1044	300	1.0	100A	30 §	4 0m		170C	1.5	1.0	25A	200u			300			Si	S66b
5	1N1050	300	1.0	100A	30 §	4 0m		170C	1.5	1 0	25A	200u			300			Si	S68b
6	1N1553	300	1 0	100				150	1.4	.60	25		1.0m	100A	300			Si	DO4
7	AM31	300 †	1 0	100C$	20 §	8.0m		125A	1.25	1.0	25C		.30m∅	100C	300			Si	DO4
8	DSR1203	300	1.0	100					1.1	1.0		100n							A266
9	SI300E	300	1.0	100A	50			150C	1 0	1 0	25A	5.0u			300			Si	DO27
10	SM31	300	1 0	100$	45			200A	1 0	1.2	25	1 0u			300			Si	A84
11	SM513	300	1 0	100$	45			150†	1 0	1 0	25	10u			300			Si	A84
12	1N2028	300 †	1 0	150C	25	8.3m		175C	2.0	2.0	25		.50m	150C	300			Si	DO4
13	AM34	300	1 0	150C$	20 §	8 0m		175A	1.25	1.0	25C		.50m	150C	300			Si	DO4
14	BY104∅	300	1 0	150C$	25			150C	.90	1 0	25C	4 0u	.50m	150C	300			Si	DO2
15	BY114Δ	300	1.0	150C$	25			150C	80	1 0	25C	1 0u	10m	150C	300			Si	DO2
16	BY124∅	300	1 0	150C$	25			150C	1.0	1.0	25	10u	1 0m	150C	300			Si	DO2
17	E1E3	300	1 0	150	200			175	1.3	1 0	150	10u	1.0m	150	300			Si	DO4
18#	SSiB0620	300	1 1	45A	50	10m		160J	1.0	2.0	25J	1.0u			300			SiΔ	A3v
19#	SSiC1720	300	1.1	45A	100	10m		150J										SiΔ	M441
20	HC300F	300	1 1	50A	50	8 0m		175A	1.2	1.1	25	10u			300			Si	F29
21	A6D1	300	1.2	25	60			175A	.50		150	1.0u	50m	150	300			Si	A84a
22	A6D5	300	1.2	25	60			175A	.50		150	5.0u	.50m	150	300			Si	A84a
23	A6D9	300	1.2	25	60			175A	.50		150	10u	.50m	150	300	100	200u	Si	A84a
24	B6D1	300	1.2	25	60			175A	.50		150A	1.0u	50m	150	300			Si	A1rx
25	B6D5	300	1 2	25	60			175A	.50		150A	5 0u	50m	150	300			Si	A1rx
26	B6D9	300	1 2	25	60			175A	50		150A	10u	50m	150	300	100	200u	Si	A1rx
27	K6D5	300	1 2	50	60			150C	2.0	1.2	25	5.0u	.50m	100C	300			Si	
28	TM32	300	1 25	25C$				125C	2.0	80	25		30m∅	100C	300			Si	S145
29#	SSiB0120	300	1 25	45A	50	10m		180J	1.1	2 5	25J	1 0u			300			SiΔ	A31v
30	RA132FA	300	1.3	55A$	60			150A	1.2	1 3	25		.30mØ	150	300			Si	A34
31	1N1910	300 Ø	1 5	25A	30	16m	2 0	250	1.0	1 0	25	10u			300			SiΔ	A86
32	1N2291A	300	1.5	25$	20			150	600m	1 5	25		100u	150	300			SiΔ	DO4
33	1N2292	300	1 5	25	100			150	.60	1.5	25		.50m	150	300			SiΔ	S35
34	1N2292A	300	1 5	25$	20			150	.60	1 5	25		100u	150	300			SiΔ	DO4
35	1N2644	300	1 5	25A	15	8 3m		165A	1.3	1.5	25A	300u			300			Si	M124
36#	1S153	300	1 5	25A	15			140	1.3 Δ	1 0		5.0uΔ			300			Si*	S42
37	150R3B	300	1 5	25	60			175	2.0	1 5	25	5 0u	50m	150	300			Si	
38	A7D1	300	1 5	25	60			175A	50		150	1.0u	.50m	150	300			Si	A84a
39	A7D5	300	1 5	25	60			175A	50		150	5 0u	50m	150	300			Si	A84a
40	A7D9	300	1 5	25	60			175A	.50		150	10u	50m	150	300	100	200u	Si	A84a
41	A168-3†	300	1 5	25	50	8 0m		125	1.1	1 0	25	5 0u			360			Si	M575
42	B7D1	300	1.5	25	60			175A	.50		150A	1.0u	50m	150	300			Si	A1rx
43	B7D5	300	1 5	25	60			175A	.50		150A	5.0u	50m	150	300			Si	A1rx
44	B7D9	300	1 5	25	60			175A	.50		150A	10u	50m	150	300	100	200u	Si	A1rx
45	CODI5334	300	1 5	25$	35			150	1.1	.80	25	1.0u			300			Si	M45
46	M1D1	300	1 5	25	250			175A	.50		150	2 0u	5.0m	150	300			Si	A1ep
47	M1D5	300	1 5	25	250			175A	50		150	10u	5.0m	150	300			Si	A1ep
48	M1D9	300	1.5	25	250			175A	.50		150	10u	5 0m	150	300	100	200u	Si	A1ep
49	MB238	300	1 5	25	25	8 3m	2 0	175A	1.0	.80 ∅	25	200n	15u	100	300			Si	A60f
50	PS2345	300	1.5	25A$				175A	1 0	20	25A	6.0u			300			Si	M22
51	S231	300	1 5	25$	55				1 75	2 5	25	200u			300			Si	A54
52#	SA3M1	300	1 5	25A	47		2 0	150A	2.0	10	25J	10u	300u	150J	300	375 Ø		SiΔ	DO27
53	SI3	300	1 5	25A	80			150C	1 0	1.5	25A	1.0u			300			Si	A1bc
54#	ZR13	300	1 5	25A	80	10m		150A	1.0	1 5	25A	5.0u	.20m	100A	300			Si	A6a
55#	ZR13T	300	1 5	25A	80	10m		150A	1.0	1.5	25A	5 0u	20m	100A	300			Si	S164
56	1N4819	300 †	1 5	40	50			170	1 3	1 5	40		.25m	40	300			Si	DO27
57#	S2A30	300	1.5	40A	80	10m		150J	1.05 Δ	1.5	25A		.53m	25A	300			SiΔ	A56
58#	S4M1	300	1 5	40A	47		2 0	170A				10u	300u	150	300			SiΔ	DO27
59	1 5E3	300	1 5	50A	75 §			175A	1 1	1 5	25A	2 0u	50u	100	330			SiΔ	DO27
60	1 5J3	300	1 5	50	75 §			175	1.1	1.5	25A	2.0u	50u	100	330			SiΔ	DO15
61	A14C	300	1 5	50	50			175J	1 0	1.0	25J	5.0u			300			Si	A94g
62	K7D5	300	1 5	50	60			150C	2 0	1 5	25	5.0u	.50m	100	300			Si	
63	1N1565	300	1 5	55A	70	8 3m		175A	1 2	.50	25A	5 0u	.50m	100	300			SiΔ	C12
64	1N2393	300	1.5	55A	35			150A	1.2	1.5	25		.30mØ	150A	300			Si	A32
65	1N2402	300	1.5	55A	35			150A	1 2	1 5	25		.30mØ	150A	300			Si	C8
66	1N2411	300	1.5	55A	35			150A	1 2	1.5	25		30mØ	150A	300			Si	C9
67	1N2420	300	1 5	55A	35			150A	1 2	1 5	25		30mØ	150A	300			Si	F8
68	1N5394	300	1 5	70C	50 §			170C	1 4	1 5	70C		30m	150	300			Si	DO15
69	1N2849	300 †	1 5	75C	15			165A	65 Ø	.50	150C		30mØ	150C	300			Si*	S35
70▼	CTN300	300	1 5	75	50			175A	1 0			10u			300			Si	M594*
71▼	CTP300	300	1.5	75	50			175A	1.0			10u			300			Si	M594a*
72▼	VB300	300	1 5	75	50			175A	1 0			10u			300			Si	M594b*
73	1N1117	300 †	1 5	85C	15			170A	65 Ø	1 5	150		30mØ	150	300			Si	DO4
74	1N1056	300	1 5	100A	60 §	4 0m		150A	1.5	1 5	25A	1 0m			300			Si	A167v
75	1N1087	300	1.5	100A	60 §	4.0m		150A	1.5	1 5	25A	2.0m			300			Si	F22h
76	1N1452	300	1 5	100C$				190J	1.0	2 4	150C		5.0m	25C	300			Si	S41a
77	1N1619	300	1 5	100A$	100	4.0m		100A	1.2	1 5	25		5.0m	25	300			Si	A52
78	30F1	300	1 5	100				175J	1.0	2 4	25C		10m	25C	300			Si	S41a
79	1N1448	300	1 5	120C				175J	1.3	1 8	25A		2.0m	25C	300			Si	S41b
80#	SSiC0820	300	1 6	45A	100	10m		180J	1.0	3 0	20J	1 0u			300			SiΔ	A31v
81	1N1231B	300	1 6	50$	30				1.2	1 0	25	10u	300u	150	300			Si	S25a
82	S1230	300	1 6	120C	35		15 ØØ∅	175J	1.0 Ø	1.0	25A		10mØ	100C	300	1.8k		SiΔ	DO13Δ
83	1N1221	300	1 6	135C	20			175J	1.5	2 5	25J	500u	1 5m	150J	300			Si	DO1
84	1N1231	300	1 6	135C	20			175J	1.5	2 5	25J	500u	1.5m	150J	300			Si	S25
85	1N1221B	300 †	1.6	140C	25			175$	1.7	1.3	25	300uØ	10mΔ	25	300			Si	DO1
86	1N1231A	300	1 6	140C	20			175J	1.5	2.5	25J	50u	50m	150J	300			Si	S25
87	1N1541	300	1 6	140C	20			175J	1 5	2.5	25J	50u	.50m	150J	300			Si	DO4
88	1N1221A	300	1 6	175J$	20			175J	1 5	2 5	25J	50u	50m	150J	300			Si	DO1
89	MDA922-5†	300 †	1 8	55A	100			175J	1 1	750m	25J	20u			300			SiΔ	M535a
90#	10B3	300	1 8	125B	40	10m		175A	1.1	3.0	25A	50u	50m	150A	300			SiΔ	DO1
91#	SSiC1120	300	1 9	45A	100	10m		180J	1 0	3 0	20J	1 0u			300			SiΔ	A230
92	NS2003	300	2 0		200	8 3m			1.2	2 0		25u			300				
93	200R3B	300	2 0	25	60			175	2.0	2.0	25	5 0u	50m	150	300			Si	
94	AB300	300	2.0	25	15		3 0	100	1.25	1 0	25	5 0u			300			Si	A3q
95	GR19	300	2.0	25	20			125	1.1	1.0	25	10u	.30m	150	300			Si	A1ry
96	M2D1	300	2.0	25	250			175A	.50		150	2 0u	5.0m	150	300			Si	A1ep
97	M2D5	300	2 0	25	250			175A	50		150	10u	5.0m	150	300			Si	A1ep
98	M2D9	300	2 0	25	250			175A	50		150	10u	5.0m	150	300	100	200u	Si	A1ep
99	MB230	300	2.0	25	25	8.3m	2 0	175A	1.0	1.0 ∅	25	25n	5.0u	100	300			Si	A60f
100	SEN230	300	2.0	25	150	8 3m		170A	1.2	2.0	50		25u	50	300			SiΔ	DO27
101	SLA24A	300	2.0	25	80	8.3m		150A	.95	2 0	25	1.0u	10m	100	300			Si	A69
102	SLA24B	300	2.0	25	80	8.3m		150A	1.0	2.0	25	1 0u	.10m	100	300			Si	A69
103	SLA24C	300	2.0	25	80	8 3m		150A	1.0	2 0	25	5.0u	.25m	100	300			Si	A69
104#	SR3AM6	300	2 0	40A	150 §	8.3m		150J	1.1	10	25A	100u	1.0m	150J	300			SiΔ	A1fn
105	1N5173	300	2.0	50A	200			175A	1.2 †	2.0	50A		25u	50A	300			Si	DO27
106	20A3	300	2.0	50	50			170A	1.3	2.0	50	10u	.25m	50	300			Si	DO27
107	B172-30	300	2.0	50	60			150C	2.0	2.0	25	5.0u	50m	100	300			Si	
108	BFW300†	300	2.0	50A	50			100C	1.1	1.0	25A								M40a
109▼	FW300†	300	2.0	50A	50			125A	900m	1.0	25A	5 0u						Si	M40a
110	K8D5	300	2 0	50	60			150C	2.0	2.0	25	5 0u	.50m	100	300			Si	

SYMBOLS AND CODES EXPLAINED IN INTERPRETER

5. RECTIFIERS

IN ORDER OF (1) PIV, (2) MAX AVG FWD CURRENT (3) TEMPERATURE, and (4) TYPE No.

LINE No	4 TYPE No	1 PIV (V)	MAX AVG FWD DC CURRENT 2 Io (A)	3 at TEMP (°C)	MAX RATINGS @ 25°C SURGE CUR PEAK 1 Cy (A)	PULSE WIDTH (s)	DISS. (W)	MAX. TEMP (°C)	MAXIMUM FORWARD VOLTAGE DROP Vf (V)	at If (A)	at TEMP (°C)	MAX. REVERSE CURRENT Ir @25°C & Vr (A)	Ir at T & Vr (A)	TEMP T (°C)	TEST VOLT Vr (V)	AVALANCHE RATINGS MAX V BKDN. (V)	MIN SLOPE (A/V)	MAT.	DESCRIPTION DWG. No.
1	SI3A	300	2 0	50A	80			150C	1 0	3 0	25A	1 0u			300			Si	A1bc
2	BH4R3†	300	2 0	55	45	8 3m		115	1 2 ∅	1.0	85		800u∅	85	210			Si	M151
3	2F3	300	2 0	75C	50			150C	1 3	2 0	25C	2 0u	50u	100C	330			Si△	F22
4	HB300	300	2 0	75A	200			175C	1.0	2 0	25A	5.0u			300			Si	A179b
5	1N1087A	300	2.0	100A	100	4 0m		100A				25n			300			Si	F42
6#	1S1353	300	2 0	124C	40	8 3m		150J	1 2	3.0	25A	10u∅	50m∅	150J	300			Si△	S48c
7#	SR2B6	300	2 0	124C	60			150J	1 2 †§	3 0	25C	10u	500u	150J	300				S157a
8	250R3B	300	2.5	25	250			175	2 0	2 5	25	10u	1.0m	150	300			Si	
9	M3D1	300	2.5	25	250			175A	.50		150	2.0u	5.0m	150	300			Si	A1ep
10	M3D5	300	2 5	25	250			175A	.50		150	10u	5.0m	150	300			Si	A1ep
11	M3D9	300	2 5	25	250			175A	50		150	10u	5.0m	150	300	100	200u	Si	A1ep
12#	0243	300	2.5	45	100	10m		150J	1.5	7 8	25	5 0u			200			Si	S87e
13#	SJ303F	300 †	2 5	100A	30			150A	1 0	75	25A	10u	.30m	150A	300			Si△	DO3
14	1N2527	300	2 5	150C$	50			150C	1.2	4 0	25C	4.0u	50m	150C	300			Si△	DO10
15	1N2538	300	2 5	150C$	50			150C	1 0	4.0	25C	1 0u	10m	150C	300			Si△	DO10
16	1N2549	300	2 5	150C$	50			150C	1 5	4 0	25C	10u	1 0m	150C	300			Si△	DO10
17	BY204	300	2 5	150C$	50			150C	1 2	2.5	25C	4.0u	.50m	150C	300			Si△	DO4
18	BY214	300	2.5	150C$	50			150C	1 0	2 5	25C	1.0u	.10m	150C	300			Si△	DO4
19	BY224	300	2 5	150C$	50			150C	1 5	2 5	25C	10u	1 0m	150C	300			Si△	DO4
20	BY304	300	2 5	150C$	50			150C	1.2	2 5	25C	4.0u	.50m	150C	300			Si	S35
21	BY314	300	2 5	150C$	50			150C	1 0	2.5	25C	1 0u	.10m	150C	300			Si	S35
22	BY324	300	2 5	150C$	50			150C	1 5	2 5	25C	10u	1 0m	150C	300			Si	S35
23	MA30	300	2 5	150B	30			190B	1 0 △	2 5	150B	15u△						Si△	DO4
24	TM31	300	2.7	25C				125C	2.0	2 0	25		30m∅	100	300			Si	S145
25	NS3003	300	3 0		300	8 3m			1 2	3 0		25u			300				
26	1N2708	300	3.0	25A	15	8 3m		165A	1 3	3.0	25A	200u			300			Si	M125
27	1N2731	300	3 0	25A	15	8.3m		165A	1.3	3.0	25A	300u			300			Si	M126a
28	1N2756	300	3 0	25A	15	8 3m		165A	1 3	3 0	25A	300u			300			Si	M126a
29	3AF4	300	3 0	25A	150			150C	1 2	3 0	25A	300u			200			Si	A222
30	30R3	300	3.0	25	200	8 0m	3 0	25	1 0	3 0	25	10u	50u	100	300			Si	A1rz
31	300R3B	300	3 0	25	250			175	2 0	3.0	25	10u	1 0m	150	300			Si	
32	AC300	300	3 0	25A	50			150C	1 0	3 0	25A	5 0u			300			Si	A1ey
33	M4D1	300	3 0	25	250			175A	.50		150	2 0u	5 0m	150	300			Si	A1ep
34	M4D5	300	3 0	25	250			175A	50		150	10u	5.0m	150	300			Si	A1ep
35	M4D9	300	3 0	25	250			175A	50		150	10u	5.0m	150	300	100	200u	Si	A1ep
36#	SSiC1220	300	3 0	45A	100	10m		180J	1 0	3.0	20J	1 0u			300			Si△	A231
37	1N1125	300	3 0	50A	25 §			150A	1 1	1 0	25A		30m∅	150A	300			Si△	DO4
38#	1S1661	300	3 0	50A	90			150J	1 2	3.0	25A		1 0	150J	300			Si	S336
39	3A300	300	3.0	50	300	8.0m		175	1 2	3 0	25	500u			300			Si	A1eq
40	A138-3†	300	3 0	50	50	8 0m		150	1 1	3 0	25	5 0u			360			Si	M79c
41	CH302FA	300	3 0	50A	15			150A	1 2	1 0	25C		3 0m∅	125C	300			Si	S152a
42	CK302FA	300	3 0	50A	15			150A	1 2	1 0	25C		3.0m∅	125C	300			Si	S153
43	CS302FA	300	3 0	50A	15			150A	1.2	1 0	25C		3.0m∅	125C	300			Si	S152
44	S3A3	300	3 0	50A	300			150C	1 0	3 0	25A	1 0u			300			Si	A1ez
45#	S8-03	300	3 0	50	200	10m		150	1 1	8 0	25	50u			300			Si	S19m
46	S300	300	3.0	50	25		10	175	1 0	1.0	25	5 0u				300		Si	DO4
47	HC300	300	3.0	75A	300			175C	1.0	3.0	25A		2 0m	175A	300			Si	A179b
48	MR1033A,B	300	3 0	75A	300	8 3m	4 0	175J	.90	3 0	25A	500u	1 5m	75A	300			Si△	Z44
49	MR2072	300	3 0	75	300	8 3m		175J	50 ∅	3 0	75	1.0m	3.0m	75	300			Si△	A179a
50	MR2372	300	3 0	75	300	8 3m		175J	1 0	3 0	25	1 0m	3.0m	75	300			Si△	M173
51#	3F30△	300	3 0	80A	40	10m		175A	1 1	3 0	25J	50u	.50m	150J	300			Si	DO4
52	S53△	300	3 0	80$	20				1 3	5 0	25	100u			300			Si	S48
53#	S3BR2	300 %	3 0	95B	53			130J	55 ∅	1.5	25		2.0m	125	300			Si	S81
54	1N5403	300	3 0	105C	200 §			170C	1 2	3 0	105C		50m	150C	300			Si	A3q
55	SEN330	300	3 0	105C	200	8 3m		170A	1.2	3 0	25	5 0u	500u	150	300			Si△	DO27
56	30S3	300	3 0	125	150 §			175J	1 0 †	3 0	25	5 0u	300u	125	300			Si	A1ed
57#	D3003	300	3.0	125B	35			125B	1 5	3 0	25		.30m	125B	300			Si△	S4c
58	1N1584	300	3 0	150C				175B	1 5	6 0	25C		.50m∅	150	300			Si	DO4
59	3C30	300	3 0	150				190	1 1	6 0	25		50m	150	300			Si	DO4△∅
60	E2E3	300	3 0	150	200			175	1 3	3.0	150	10u	1 0m	150	300			Si	DO4
61#	S3M3	300 %	3.0	150J	180			150J	1 2	3 0			500u		300			Si△	A52d
62	1N1125A	300	3 3	50B	25			170A	1.1	1 0	25A	10u	.20m	150A	300	360		Si△	DO4
63	1N1577	300	3 5	25C$	70			150C	1 2	3 5	25A	5 0u	50m	125A	300			Si△	S175
64	350R3B	300	3 5	25	250			175	2 0	3.5	25	10u	1 0m	150	300			Si	
65	1N3571	300	3 5	85B	35			165A	50 ∅	2.5	150A		40m	150A	300			Si	DO4
66	1N2677	300	3 6	25A	15	8 3m		165A	1 3	3 6	25A	300u			300			Si	M126a
67	1N2744	300	3 6	25A	15	8 3m		165A	1 3	3 6	25A	300u			300			Si	M126c
68	400R3B	300	4 0	25	250			175	2 0	4 0	25	10u	1 0m	150	300			Si	
69#	SJ304F	300 †	4 0	25A	15			200A	1 0	75	25A	10u	1.5m	200A	300			Si△	DO3
70	1N2514	300	4 0	30C	30			165	1.1	1 5	25	2 0u			300			Si△	DO4△
71	1N2520	300	4 0	30C	25			150C				2.0u	.30m	150C	300			Si△	S117
72#	BYY89	300	4 0	50B	50			150J	1 3	2 0	25J	5.0u			300			Si△	M41a
73	4F3	300	4.0	75	300	8.0m	3 0	175B	1 3	4 0	25	100u	500u	100	330			Si△	F22
74#	SSiC1320	300	4 0	120C	100	10m		150J	1 1	7.0	20J	1 0u			300			Si△	S112b△
75	450R3B	300	4 5	25	250			175	2.0	4.5	25	10u	1 0m	150	300			Si	
76	MR30	300	4 5	150B	70			185B	1.0 △	4 5	150B	20u△						Si△	DO4
77	1N2232	300	5 0	25$	200			150	60	1 5	25		500u	150	300			Si△	DO4
78	1N2232A	300	5 0	25$	100			150	60	5 0	25		350u	150	300			Si△	DO4
79	1N2233	300	5 0	25$	20			150	60	1 5	25		500u	150	300			Si△	S35
80	1N2233A	300	5 0	25$	100			150	60	5 0	25		350u	150	300			Si△	S35
81	500R3B	300	5.0	25	250			175	2 0	5 0	25	10u	1.0m	150	300			Si	
82#	BY118∅	300	5 0	25			5 0	150J	1 2	14	25	100u			300			Si	C50
83	S5A3	300	5 0	50A	300			150C	1 1	5.0	25A	1.0u			300			Si	A1ez
84	1N1062	300	5 0	100A	60 §	4 0m		170C	1.5	5.0	25A	1 0m			300			Si	S67a
85	1N1068	300	5.0	100A	60 §	4 0m		170C	1.5	5 0	25A	1 0m			300			Si	S66c
86	1N1074	300	5 0	100A	60 §	4 0m		170C	1.5	5.0	25A	1.0m			300			Si	S68c
87	1N1091	300	5.0	100A	60 §			170C	1 5	5 0	25A	2.0m			300			Si	F22h
88	1N1091A	300	5.0	100A					1 5	5.0	100A		5 0m	100A	300			Si	F73
89	30F5	300	5 0	100				175J	1.1	13	25C		10m	25A	300			Si	S41a
90	366F	300 †	5.0	145C	100			180J	1 1	5.0	25C		10m	180	300			Si	S27
91	407F	300	5.0	150C	125	8 3m		175J	1.1	5.0	25C		2 0m∅	175J	300			Si	DO4
92	E3E3	300	5.0	150	200			175	1.3	5 0	150	10u	1 0m	150	300			Si	DO4
93	F1E3	300	5.0	150C	200			175J	1 3	30	25C		1 0m	150C	300			Si	DO5
94	SL3	300	5 0	150A	150			175C	1 1	5 0	25A	5 0u			300			Si	DO4∅
95	550R3B	300	5 5	25	250			175	2 0	5 5	25	10u	1.0m	150	300			Si	
96	NS6003	300	6.0		300	8 3m			1.2	6 0		25u			300				
97	6A300	300	6 0	25	300	8 0m		175	1.2	6.0	25	25u						Si	S19f
98	600R3B	300	6 0	25	250			175	2.0	6 0	25	10u	1 0m	150	300			Si	
99#	G3006	300	6 0	25A	140	10m	8.0	150A	1 2	6.0 †	25		3.0m	125C	300			Si△	DO4
100#	P3006	300	6.0	25A	140	10m	8.0	150A	1 2	6 0 †	25		3.0m	125C	300			Si△	S95a
101	SLA300†	300	6.0	25				150A				1 0u	75u	100	300				M545
102#	1S1663	300	6 0	50A	200			150J	1.2	6 0	25A		1.3	150J	300			Si	S336
103	6F30	300	6.0	55B$	50			190B					3.0m∅	150	300			Si△	DO4
104#	BYX50-300	300	6.0	110B	80 §	10m		150J	1.95	20	25J		1.4m	125J	300			Si	DO4∅
105#	BYX48/300	300	6.0	125B	90 §			175J	1.8 †	15	25J		.20m	125J	200			Si△	DO4∅
106#	S3AN6	300 %	6 0	125B	125		6.5	150J	470m∅	6 0 †			2.0m	125B				Si△	DO4∅
107	1N1345	300	6.0	150C	66		9.5	190J	1 2	10	25J		10m	25	300			Si	S26
108	1N1345A	300 †	6 0	150B$	150			200J	.64 ∅	6.0	150B		1.8m∅	150B	300			Si*	DO4
109	1N1345B	300	6 0	150C	150			190J	1 1	6.0			.02m	25C	300			Si△	DO4△
110	1N2150	300	6.0	150C$	150			150	1 2	10	25	4 0u	.50m	150A	300			Si	DO10

SYMBOLS AND CODES EXPLAINED IN INTERPRETER

5. RECTIFIERS

IN ORDER OF (1) PIV, (2) MAX AVG FWD CURRENT (3) TEMPERATURE, and (4) TYPE No.

LINE No.	4 TYPE No.	1 PIV (V)	MAX AVG FWD DC CURRENT 2 Io (A)	3 at TEMP (°C)	MAX RATINGS @ 25°C SURGE CUR. PEAK 1 Cy (A)	PULSE WIDTH (s)	DISS (W)	MAX. TEMP (°C)	MAXIMUM FORWARD VOLTAGE DROP Vf (V)	at If (A)	at TEMP (°C)	MAX. REVERSE CURRENT Ir @25°C & Vr (A)	Ir at T & Vr (A)	TEMP T (°C)	TEST VOLT Vr (V)	AVALANCHE RATINGS MAX V BKDN. (V)	MIN SLOPE (A/V)	DESCRIPTION MAT.	DWG. No.
1	1N2150A	300	6 0	150C$	150			150	1 0	10	25	1.0u	10m	150	300			Si	DO10
2	1N2494	300	6.0	150C				190J	1 1	6 0	25		2.0m∅	150C	300			Si	DO4
3	1N2568	300	6 0	150C$	150			150C	1 5	10	25C	10u	1.0m	150C	300			Si△	DO10
4	BY404	300	6.0	150C$	150			150C	1 2	6 0	25C	4.0u	.50m	150C	300			Si	S35
5	BY414	300	6 0	150C$	150			150C	1 0	6.0	25C	1.0u	.10m	150C	300			Si	S35
6	BY424	300	6 0	150C$	150			150C	1.5	6.0	25C	10u	1.0m	150C	300			Si	S35
7	BY704	300	6 0	150C$	150			150C	1 2	6 0	25C	4.0u	.50m	150C	300			Si△	DO4
8	BY714	300	6.0	150C$	150			150C	1 0	6.0	25C	1.0u	10m	150C	300			Si△	DO4
9	BY724	300	6.0	150C$	150			150C	1.5	6.0	25C	10u	1.0m	150C	300			Si△	DO4
10	E4E3	300	6.0	150	200			175	1 3	6.0	150	10u	1.0m	150	300			Si	DO4
11	KR602FA	300	6 0	150S$	75			175S	1 2	6 0	150S		1 0m	150S	300			Si	DO10
12#	SiD01E	300	7 0	90C	60	10m		140J	1 25	6 0	25	100u		25	200			Si	A31u
13	1N2696	300	7 2	25A	15	8 3m		165A	1 3	7.2	25A	300u			300			Si	M126e
14	MS30	300	7 5	150B	140			185B	1 0 △	7.5	150B	20u△						Si△	DO4
15#	ZR23	300	8 0	25A	80	10m		150A	1 2	5 0	25A	5 0u	.20m	100A	300			Si	S235
16#	S5B30	300	8 0	40A	430	10m		150J	1 05 △	20	25A		2 7m	25A	300			Si△	S50
17#	S8-03F	300	8 0	50	200	10m		150	1 1	8.0	25	50u			300			Si	M389
18#	SX753	300	8 0	125A	100	10m		160J	1 2	8.0	25J		1 0m	100J	300				S31a
19	E5E3	300	8 0	150	200			175	1 3	8 0	150	10u	1 0m	150	300			Si	DO4
20	1N2798	300	8 5	25A	75			175A	1 25	15	150C		5 0m	150C	300			Si	DO5
21#	SiD02E	300	9 5	90C	110	10m		140J	1 15	6 0	25J	100u		25J	200			Si	A31u
22	1N2252	300	10	25C$	200			150	60	10	25		1.0m	150	300			Si△	DO4
23	1N2252A	300	10	25C$	200			150	.60	10	25		50m	150	300			Si△	DO4
24	1N2253	300	10	25$	200			150	60	10	25		1 0m	150	300			Si△	S35
25	1N2253A	300	10	25C$	200			150	60	10	25		.50m	150	300			Si△	S35
26#	G3010	300	10	25A	230	10m	17	150A	1 1	10 †	25		3 0m	125C	300			Si△	DO4
27#	MA233	300	10	25$	50			150					4 5m	125	125			Si△	S74
28#	P3010	300	10	25A	230	10m	17	150A	1 1	10 †	25		3.0m	125C	300			Si△	S95a
29#	SJ304E,K	300 †	10	25C	15		4 3	200C	1 0	75	25C	10u	1.5m	200C	300			Si△	DO4∅
30#	0602	300	10	45	300	10m		150J	1.4	30	25	100u			150			Si	S87e
31	1N1623	300	10	100A$	150	4 0m		100A	1 2	10	25		5 0m	25	300			Si	S43
32#	1S163	300	10	120B	200			175	1 6	50	24J		3.0m	175J	300			Si△	S103
33#	SA3AN12	300	10	120B	210			150J	470m∅	10			2.0m		300			Si△	DO4∅
34#	BYX42/300	300	10	125B	125 §			175J	1 4 †	15	25J		.20m	125J	200			Si△	DO4∅
35#	D3010	300	10	125B	130			125B	1.5	10	25		30m	125B	300			Si△	S4c
36#	S3AN12	300 %	10	125B	210			150J	500m∅	9 5	25B		2.0m	125B				Si△	DO4∅
37	367F	300 †	10	130C	150			180J	1.2	10	25C		10m	180C	300			Si	S27
38	408F	300	10	145C	175	8 3m		175J	1 2	10	25C		2.0m∅	175J	300			Si	DO4
39	1N2023	300 †	10	150C	110	8 3m		175C	1 5	25	25		5 0m	150C	300			Si	DO5
40	40111	300	10	150C	140 §			175C	60	10	150C	75u△	1.5m∅	150C	300			Si△	DO4
41#	BYY67	300	10	150J	200			125C	80 ∅	10	25		2.0m	125B	300			Si△	S72c
42#	BYY68	300	10	150J	200			125C	80 ∅	10	25		2 0m	125B	300			Si△	S72d
43	E6E3	300	10	150	200			175	1.3	10	150	10u	1.0m	150	300			Si	DO4
44	F2E3	300	10	150C	200			175J	1 3	30	25C		1 0m	150C	300			Si	DO5
45#	1S1653	300	12	50A	200			150J	1 2	12	25A		1 5	150J	300			Si	S335
46	SL300	300	12	50A	300			175C	1 4	12	25A		2 0m	150A	300			Si	DO4∅
47#	8AN30	300	12	55A	210	10m		140B	65 ∅	13	25A		10m	120J	300			Si	S4q∅#
48#	SiD03E	300	12	85C	120	10m		140J	1 55	20	25J	500u		25J	200			Si	M346
49	1N5410	300	12	100C	200 §			175C	1 0 †	12	100C		5 0m	100C	200			Si	DO4
50	2N5410	300	12	100C	200 §			175C	1 0 †	12	100C		5 0m	100C	200			Si	DO4
51	30J3P	300	12	100A	150	4 0m		100A	1 3			2 5m			300			Si	S23
52#	SR10L6S	300	12	120C	200			150J	1 2 †	40	25C		1 5m∅	150J	300			Si	S249a
53	1N1203	300 *	12	150C	100		18	190J	1 4	20	25J	10u			300			Si	S27
54	1N1203A	300	12	150B$	240			150B	1 3	12	25A		3 0m	150A	300			Si△	DO4△∅
55	1N1203B	300	12	150C$	250			150B	1 1	12	25A		1 0m	150A	300			Si△	DO4△
56	1N2579	300	12	150C$	250			150C	1 2	20	25C	8 0u	1 0m	150C	300			Si△	DO10
57	1N2590	300 ∅	12	150C	250			150C	1 0	12		2 0u	20m	150C	300			Si△	DO10
58	1N2601	300	12	150C$	250			150C	1 5	20	25C	20u	2 0m	150C	300			Si△	DO10
59	BY504	300	12	150C$	250			150C	1 2	12	25C	8 0u	1.0m	150C	300			Si	S35
60	BY514	300	12	150C$	250			150C	1 0	12	25C	2 0u	.20m	150C	300			Si	S35
61	BY524	300	12	150C$	250			150C	1 5	12	25C	20u	2 0m	150C	300			Si	S35
62	BY804	300	12	150C$	250			150C	1 2	12	25C	8 0u	1 0m	150C	300			Si△	DO4
63	BY814	300	12	150C$	250			150C	1 0	12	25C	2.0u	20m	150C	300			Si△	DO4
64	BY824	300	12	150C$	250			150C	1 5	12	25C	20u	2 0m	150C	300			Si	DO4
65	E7E3	300	12	150	200			175	1 3	12	150	10u	1 0m	150	300			Si	DO4
66	MR1123	300	12	150C	300 §			190J	1 0	12	25C	500u			300			Si△	DO4
67	TR1123	300	12	150C	300 §			190J	1.2	12	25C	50u	40m∅	150C	300			Si	DO4
68	UR123FA	300	12	150S$	240			175S	1.2	12	25		3 0m	150S	300			Si	DO10
69	12F30	300	12	155B$	65			190B					3.0m∅	150	300			Si△	DO4
70#	SU312	300	12	175C$	150			175S	1 2	12	25		4.0m	150C	300			Si△	M80
71	MT30	300	14	150B	240			185B	1 0 △	14	150B	100u△						Si△	DO4
72#	SC315	300	15	50A	150			160J	1 1	15	25A	100u	50m	100A	300			Si△	DO4
73	SCDA3	300	15	55A	300			150A	1 0	3 0	25A	10u	100u	100A	300			Si	M497
74	SCNA3	300	15	55A	300			150A	1 0	3 0	25A	10u	100u	100A	300			Si	M497
75	SCPA3	300	15	55A	300			150A	1 0	3 0	25A	10u	100u	100A	300			Si	M497
76#	5M30	300	15	79B	300	10m		130A	1 3 †	50	130J		5 0m		300			Si	S193a
77	1N1080	300	15	100A	150 §	4 0m		170C	1 5	15	25A	20m			300			Si	S68d
78	30Q3	300	15	100A$				150	1 5	15			20m	25	300			Si	S68
79#	RN3015	300	15	100C	350	10m	25	125C	1 2	15 †	25		3 0m	125C	300			Si△	DO5
80#	SR10F6S	300	15	115C	200			150J	1 2 †	40	25C		1 5m∅	150J	300			Si	M337a
81#	SR10N6S	300	15	115C	200			150J	1 2 †§	40	25C		1 5m	150J	300				C112
82#	S3AN15	300	15	120B	220			150J	490m∅	15			3 0m		300			Si△	S324∅
83#	S3BN15	300	15	120B	220			150J	490m∅	15			3 0m		300			Si△	S320∅
84	368F	300	15	125C	240	8 3m		180J	1 3	15	25C		2 0m∅	130C	300			Si	DO4
85	409F	300	15	125C	250	8 3m		175J	1.3	15	25C		2 0m∅	175J	300			Si	DO4
86#	SR10J6S	300	15	140C	200	8 3m		175	1 2	40	25C		3 0m	175J	300	500	400u	Si△	M337
87	1N3211	300	15	150C	250	8 3m		175C	1 5	40	25C	1 0m	10m	150C	300			Si	S4n
88	703F	300	15	150	250	8 3m	15	175J	1 2	40	25	2.0m	5 0m	175J	300			Si△	M78
89	F3E3	300	15	150C	200			175J	1 3	30	25C		1 0m	150C	300			Si	DO5
90	1N3619	300	16	155B$	300			175B					1 8m	175B	300			Si△	DO4
91	2030	300	16 5	25A	200		4 0 ∅	150A	60 ∅	19	25A		1 0m∅	150C	300	550		Si△	DO4#△
92	S5978E,9E	300	18					150C	1 2										A1ss#
93#	S3BR8	300 %	18	120B	188		18	140B	60 ∅	18	25		10m	125	300			Si	S122a
94	40211	300	18	150C	250 §			175A	650m∅	18	150C	100u	2.5m∅	150C	300			Si△	DO5∅
95	V300	300	18	150	300			175	1 7	18	25		2 0m	25	300			Si	DO21
96	1N2275	300	20	25$	400			150	60	20	25		1 0m	150	300			Si△	DO4
97#	MA253	300	20	25$	100			150					6 0m	125	125			Si△	S72a
98#	S8B30	300	20	40A	100	10m		150J	1 05 △	40	25A		6.7m	25A	300			Si△	S51
99	A40C	300	20	110B	300			175B	1 2	20	25J		1.0	25J	300			Si	S88
100	A41C	300	20	110C	300			175J	1 2	20	25J	1 0m			300			Si	S88
101	A44C	300	20	110C	300			175J	1 2	20	25J	1 0m	6 0m∅	150J	300			Si	M76∅
102#	1S173	300	20	120B	400			175	1 6	100	25J		9 0m	175J	300			Si△	S102
103#	S3AN20	300	20	120B	250			150J	480m∅	20			3.0m		300			Si△	S324∅
104#	S3BN20	300	20	120B	250			150J	480m∅	20			3.0m		300			Si△	S320∅
105	1N1195A	300	20	150C	350			175C	60	20	25		3 2m	150C	300			Si△	DO5△
106	417F	300	20	150C	350	8 3m		175J	1 05	20	25C		2.0m∅	150C	300			Si	DO5
107	F4E3	300	20	150C	600			175J	1 3	50	25C		2.0m	150C	300			Si	DO5
108	TM39	300	21	75C				190S	1 2	12	25		2.0m∅	150	300			Si	S145
109	2130	300	22	120C	200			175J	60 ∅	22	25A		1.0m∅	150C	300	550		Si△	DO4△
110	S2130	300	22	120C	200		1 ∅∅	175J	60 ∅	22	25A		1.0m∅	150C	300	550		Si△	DO4△

SYMBOLS AND CODES EXPLAINED IN INTERPRETER

5. RECTIFIERS

IN ORDER OF (1) PIV, (2) MAX AVG FWD CURRENT (3) TEMPERATURE, and (4) TYPE No.

LINE No.	4 TYPE No.	1 PIV (V)	MAX AVG FWD DC CURRENT 2 Io (A)	3 at TEMP (°C)	MAX RATINGS @ 25°C SURGE CUR. PEAK 1 Cy (A)	PULSE WIDTH (s)	DISS. (W)	MAX. TEMP (°C)	MAXIMUM FORWARD VOLTAGE DROP Vf (V)	at If (A)	at TEMP (°C)	MAX. REVERSE CURRENT Ir @25°C & Vr (A)	Ir at T & Vr (A)	TEMP T (°C)	TEST VOLT Vr (V)	AVALANCHE RATINGS MAX V BKDN. (V)	MIN SLOPE (A/V)	MAT.	DESCRIPTION DWG. No.
1	1N1456	300	25					190J	1.5	25	25J	25m						Si	M56d
2	1N3494	300 †	25	25C	300	8 3m		175C	1 7	18	150C	1 0u	6 0m	150C	300			Si	DO21
3#	1S1655	300	25	50A	300			150J	1.2	25	25A		2.0	150J	300			Si	S335
4▼	S25A30	300	25	55	300	8 3		150	1 0	3 0	25	10u	100u	100	50			Si	M542
5	25P30	300	25	100C	300			175J	7 0 Ø	25 †	25C		7.0mØ	150C	300			Si△	M38ab⧄
6#	SR20F6S	300	25	120C	400			150J	1 2 †	80	25C		1 5mØ	150J	300			Si	M337a
7#	SR25A6S	300	25	120C	600			150J	1.2 †§	80	25C		3.0m	150J	300				S249b
8#	SSiE1320	300	25	135C	350	10m		150J	1 1	45	25J	20u			300			Si△	S290△
9#	SSiE1420	300	25	135C	350	10m		150J	1.1	45	25J	20u			300			Si△	S290△
10	1N1195	300 *	25	145C	125		30	190J	1 4	30	25J	10u			300			Si	S29
11	1N2157	300 Ø	25	145B	400			200J	60 Ø	25	145B		3 5mØ	145B	300			Si*	DO5⧄
12	418F	300	25	145C	400	8 3m		175J	1 1	25	25C		2 0m⧄	145C	300			Si	DO5
13	F5E3	300	25	150C	600			175J	1 3	90	25C		2 0m	150C	300			Si	DO5
14#	SSiE1120	300	25	150C	350	10m		150J	1 0	40	25J	20u			300			Si△	M324a
15#	SSiE1220	300	25	150C	350	10m		150J	1 0	40	25J	20u			300			Si△	M324a
16#	ZR33C	300	30	20A$	400	10m		140A	1 2	30	25	500u	2 0m	100	300			Si△	S38
17	3130	300	30	25A	200		4 0 Ø	150A	60 Ø	34	25A		1 0mØ	150C	300	550		Si△	DO5#△
18	1N3662	300 †	30	100C	400 §			175C	70 Ø	25	25		3.5m⧄	150	300			Si	DO21
19#	S3AN31	300	30	120B	347			150J	600mØ	30			4 0m		300			Si△	S325⧄
20#	S3BN31	300	30	120B	347			150J	600mØ	30			4.0m		300			Si△	S321⧄
21	G3E3	300	30	150C	1.5k			175J	1 3	200	25C		5 0m	150C	300			Si	DO8
22#	15AN30	300	34	20A	500	10m		140B	700mØ	25	25A		20m	120J	300			Si	S241a⧄#
23	1N1460	300	35					190J	1 5	35	25J	25m						Si	M56d
24	1N2282	300	35	25$	400			150	60	35	25		5 0m	150	300			Si△	DO5
25▼	HEPR0254-RT	300	35	25$	400			190†										Si	DO5
26#	SR30B6	300	35	100C	600	8 3m		150	1 3	50			10mØ	150J	300			Si	S19d
27	1N1187	300	35	140C	500	8.3		140C	1.7	35	140C							Si	S29a
28	371F	300 †	35	140C	500	8.3m		190J	1 2	35	25C		20m	190J	300			Si	DO5
29	127350C	300	35	150	500	8.3m		200J	1 3	35	25C		4 5m⧄	150C	300			Si	DO21
30	TR302	300	37	65C				175S	1 5	50	25C		5.0m⧄	150C	300			Si	DO5
31	1N1306	300	37	120C$	600			175C	1 5	50	25		2 0m	150C	300			Si	DO5
32#	K3040	300	40	90C	800	10m	44	125C	1 2	40 †	25		4 0m	125C	300			Si△	S245
33	1N5409	300	40	100C	1 0k§			175C	1 2 †	40	100C		5 0m	100C	200			Si	DO5
34#	10M30	300	40	104B	800	10m		130A	1 2 †	120	130J		10m		300			Si	S4s
35	1N1480	300	40	120C	8 0k			190J	1 1	520	25C		75m	25C	300			Si	M56b
36	419F	300	40	120C	500	8 3m		175J	1 2	40	25C		2 0m⧄	120C	300			Si	DO5
37#	S3AN40	300	40	120B	485			150J	500mØ	40			4 0m		300			Si△	S325⧄
38#	S3BN40	300	40	120B	485			150J	500mØ	40			4 0m		300			Si△	S321⧄
39	40HF30	300 †	40	140C	500 §	8.3m		180J	1 3	40 †	140C		7.0m⧄	140C	300			Si△	S21e⧄
40	1N1187A	300	40	150C	800		68	200C	65	40	150C	15uØ	2 5m⧄	150	300			Si△	DO5
41#	BYY73	300	40	150J	800			150J	1 0 Ø	40	25		2 0m	125C	300			Si△	S72b
42#	BYY74	300	40	150J	800			150J	1 0 Ø	40	25		2 0m	125C	300			Si△	S72e
43	G4E3	300	40	150C	1 5k			175J	1 3	200	25C		5 0m	150C	300			Si	DO8
44	127351C	300	44	150	700	8 3m		200J	1 3	44	25C		4 5m⧄	150C	300			Si	DO21
45#	25AN30	300	45	20A	700	10m		140B	700mØ	40	25A		20m	120J	300			Si	S241a⧄#
46	TR325	300	45	50C	300			175C	1 5	50	25C	1 0m△	6 0m⧄	150	300			Si	M78
47	1N2451	300	45	60C	300			175B	1 1	20	25		5 0mØ	150B	300			Si△	DO5
48	1N1464	300	50					190J	1 5	50	25J	50m						Si	M56c
49	SLEA3†	300	50		150	16m			1 0	3 0	25	5 0u	100u	100	300			Si	M546
50#	MA263	300	50	25$	250			150					11m	125	300			Si△	S72
51#	SSiF2020	300	50	85C	500	10m		160J										Si△	S72m△
52#	1S1644	300	50	90A	1 0k			150J	1 2	50	25A		10	150J	300			Si	S199f
53#	SJ303E,K	300 †	50	100C	30		3 0	150A	1 0	.75	25C	10u	30m	150C	300			Si△	DO4⧄
54	S3430	300	50	120C	600		2 ØØ⧄	175J	60 Ø	50	25A		2 0mØ	150C	300	550		Si△	DO5△
55	50C30	300	50	140	400	1	55	190J	1 1	50	25		20m	150	50			Si	DO5△⧄
56	1N1682	300	50	150C	700	8 3m		165C	1 2	1 1	150C		25m	150C	300			Si	S8q
57	MR1205	300	50	150C	800	8 3m		190J	.40 Ø	50	150C		10m	150C	300			Si	M226⧄
58#	S500-3	300	55	50	3 7k	20m		120	1 2	500		50u	1 0		300			Si	M189
59#	S3AN55	300	55	125B	935			150J	500mØ	55			6 0m		300			Si△	⧄
60#	S3BN55	300	55	125B	935			150J	500mØ	55			6 0m		300			Si△	S322⧄
61#	S3GN55	300	55	125B	935			150J	500mØ	55			6 0m		300			Si△	S322⧄
62	1N2463	300	60	60C	450			175B	1 1	30	25		5 0mØ	150B	300			Si△	DO5
63	1N2133	300	60	100C	700 §			175C	1 4	60	115C		30m△	175C	240			Si	DO5
64	1N2133A	300	60	100C	900 §			200C	1 3	60	140C		30m△	200C	240			Si	DO5
65#	KS3060	300	60	110C	1 5k	10m	67	150C	1 2	60 †	25		5 0m	125C	300			Si△	S245
66#	20M30	300	60	126B	1 0k	10m		175A	1 5 †	180	175J		10m		300			Si	S4t
67	H5E3	300	60	150C	3 0k			175J	1 3	300	25C		10m	150C	300			Si	DO9
68	TR303	300	65	75C				175C	1 5	100	25C		5 0m⧄	150C	300			Si	DO5
69#	45AR30	300	70	25A	1 1k	10m		140B	70 Ø	90	25A		25m	120J	300			Si	S8j#
70#	BYX34/300	300	70	100B	1 0k	10m	30	150J	1 7	250	150J		17m	125J	300	640		Si	S12c⧄
71#	S3AN71	300	70	120B	1 2k			150J	470mØ	70			6 0m		300			Si△	⧄
72#	S3BN71	300	70	120B	1 2k			150J	470mØ	70			6 0m		300			Si△	S323⧄
73#	S3GN71	300	70	120B	1 2k			150J	470mØ	70			6 0m		300			Si△	S322⧄
74	70H30	300	70	125C	1 2k§	8 3m		200J	1 3	70 †	125C		10m⧄	125C	300			Si*	DO5⧄
75	70H30A	300 †	70	125C	1 2k§	8 3m		200J	1 3	70	125C		10m⧄	125C	300			Si△	DO5⧄
76	1N1400	300 †	70	150C	1 2k			190J	1 25	70	150C		30m	150C	300			Si	S14b
77	CH109C2	300	70	150C	1 5k	8 3m		200C	1 3 △	150	150C		15mØ	150C	300			Si*	S53△
78	J4E3	300	70	150C	4 0k			175J	1 2	300	25C		10m	150C	300			Si	DO9
79	J5E3	300	70	150C	4 0k			175J	1 2	300	25C		10m	150C	50			Si	DO9
80	30JH3	300	72		150	4 0m		100A	1 2									Si	S11f⧄
81	1N1468	300	75					190J	1 5	75	25J	50m						Si	M56c
82	75E30	300	75	150C	850	4 0m		190J	1 0	90	25C		40m	25C	300			Si	S83a△⧄
83	75F30	300	75	150C	850	4 0m		190J	1 0	90	25C		40m	25C	300			Si	M56a△⧄
84#	S16B30	300	80	40A	5 4k	10m		120J	1 05 △	200	25A		26m	25A	300			Si△	M26#
85	1N1472	300	100					190J	1 5	100	25J	60m			100			Si	M56f
86	ST630	300	100	25A	1 6k			190J	1.2	100	25A		5 0m	25	300			Si	Z29
87#	70BN30	300	100	40A	1 8k	10m		140B	70 Ø	130	25A		30m	120J	300			Si	S8k⧄#
88#	TH1003	300	100	40A	950	10m		175S	95	100	25A		30m	150J	300			Si△	S101
89#	1S1646	300	100	50A	2 0k			150J	1 2	100	25A		10	150J	300			Si	S199g
90▼#	101R3S	300	100	50C	1 6k			175J	1 6	500	25	22m		175J	300			Si	S357
91	1N2431	300	100	75C	950			175B	1 1	50	25		10mØ	150B	300			Si△	DO8
92#	1S433R	300	100	105B	1 6k			175J	1 6	500	25J		22m	175J	300			Si△	S12f
93#	SR100K6S	300	100	120C	1 6k			120†	1 0 †	105	25C		6 0m	150J	300			Si	M228d
94	1N3290	300	100	130C	1 6k	8 3m		200C	1 5	100	130C		24m	130B	300			Si	DO8
95	1N3290A	300	100	130C	2 3k			200C	1 25	100	130C		24m	130C	300			Si	DO8
96	1N3290R	300	100	130B	1 6k			200A	900m	100	200J		23	200J	300			Si	DO8
97	A70C	300	100	130B	1 6k	8 3m		200J	600mØ	100	130B		9 5m	130B	300			Si	DO8
98	A71C	300	100	130B	1 6k	8 3m		200J	600mØ	100	130B		9 5m	130B	300			Si	DO8
99	MR1215SB	300	100	135C	2 0k§	8 3m	160	190J	400mØ	80 †	150C		15m	150C	300			Si△	S199
100	MR1215SL	300	100	135C	2 0k§	8 3m	160	190J	400mØ	80 †	150C		15m	150C	300			Si△	S87a
101	MR1815SB	300	100	135C	2 0k§	8 3m	160	190J	400mØ	80 †	150C		15m	150C	300			Si△	S199m
102	MR1815SL	300	100	135C	2 0k§	8 3m	160	190J	400mØ	80 †	150C		15m	150C	300			Si△	S87f
103	100E30	300	100	150C	2 0k	4 0m		190J	1 0	140	25C		40m	25C	300			Si	S83△⧄
104	100F30	300	100	150C	2 0k	4 0m		190J	1 0	140	25C		40m	25C	300			Si	M56a△⧄
105▼	100F30△	300	100	150C	2 0k	4 0m		190J	1 0	140	25C		40m	25C	300			Si	M56a△⧄
106	150L30A	300 †	100	150C	3 0k§	8 3m		200J	1 2	150 †	150C		16m⧄	150C	300			Si*	DO30⧄
107	S4230	300	104	120C	1 5k		2 5 ØØ⧄	175J	60 Ø	104	25A		5 0mØ	150C	300	550		Si△	DO8△
108#	S200-03F	300	110	50	4 0k	10m		150	1 3	600	25	20m			300			Si	M189a
109	1N1664	300	116	120C	3 0k			175J	1 3	200	25		10m	150	300			Si	S14d
110	10912C	300	125	150	1 7k	8 3m		200J	1 3	125	25C		8 0m⧄	150C	300			Si	DO8

SYMBOLS AND CODES EXPLAINED IN INTERPRETER

5. RECTIFIERS

IN ORDER OF (1) PIV, (2) MAX AVG FWD CURRENT (3) TEMPERATURE, and (4) TYPE No.

LINE No.	4 TYPE No.	1 PIV (V)	MAX AVG FWD DC CURRENT 2 Io (A)	3 at TEMP (°C)	MAX RATINGS @ 25°C SURGE CUR. PEAK 1 Cy (A)	PULSE WIDTH (s)	DISS. (W)	MAX. TEMP (°C)	MAXIMUM FORWARD VOLTAGE DROP Vf (V)	at If (A)	at TEMP (°C)	MAX. REVERSE CURRENT Ir @25°C & Vr (A)	Ir at T & Vr (A)	TEMP T (°C)	TEST VOLT Vr (V)	AVALANCHE RATINGS MAX V BKDN. (V)	MIN SLOPE (A/V)	DESCRIPTION MAT.	DWG. No.
1#	125BN30	300	130	20A	3.0k	10m		140B	700mØ	180	25A		40m	120J	300			Si	S120a☑#
2	1N1476	300	150					190J	1 5	150	25J	60m			100			Si	M56f
3	1N2441	300	150	75C	1 2k			175B	1.1	70	25		10m	150B	300			Si△	DO8
4	1N3087	300	150	100C	3.0k§			200C	1.2	150	150C		17m	150C	300			Si	DO30
5	1N4589	300	150	110	3 0k			200A	1.4	150	110		28m	200	300			Si	DO8☑
6#	S3PN125	300 %	150	110B	3 3k			150J	1.1	150			30m		300			Si*	S319☑
7#	S3BR125	300 %	150	115B	3.3k			150J	1 1	150			40m		300			Si*	F19
8#	S3KN125	300 %	150	115B	3.3k			170J	1.1	150			30m		300			Si*	F80☑
9#	45M30	300	150	116B	3.0k	10m		175A	1 5 †	500	175J		20m		300			Si	S8m
10#	S3LN125	300 %	150	125B	3 3k			150J	1.1	150			30m		300			Si*	M521☑
11	150K30A	300 †	150	150C	3.0k§	8.3m		200J	1.2	150 †	150C		16m☑	150C	300			Si*	DO8☑
12	ST730	300	160	25A	3 0k			190J	1 2	160	25A		40m	25	300			Si	Z28
13	ST1030	300	160	25	3.0k			190J	1.2	160	25		40m	25	300			Si	Z27
14#	SSiK2120	300	160	92C	2 7k	10m		160J	1.3	500	20J	200u	2 0m	150J	300			Si△*	S72m△
15	DRS163	300	160	115C	2 5k	8.3m	170	175J	1 45	160 †	115C	5.0m	15m	115C	300			Si△	S219a☑
16	S5130☑	300	160	120C	2.2k		3 Ø☑	175J	.60 Ø	160	25A		10mØ	150C	300	550		Si△	DO9△
17	1N1285	300 *	160	125C	1 3k			190J	1.3	210	25J		40m	25	300			Si	S14g
18	1N1295	300 *	160	125C	1.3k			190J	1.3	210	25J		40m	25	300			Si	S8e
19	1N3265	300 †	160	125C	2.0k			190J	1 25	160	125C		12m	125C	300			Si	DO9☑
20	160E30	300	160	150C	5 0k	4 0m		190J	1 0	160	25C		40m	25C	300			Si	S83△☑
21	175E30	300	175	150C	5.0k	4 0m		190J	1.0	175	25C		40m	25C	300			Si	S83△☑
22	175F30	300	175	150C	5.0k	4.0m		190J	1.0	175	25C		40m	25C	300			Si	M56a△☑
23#	200BN30	300	180	20A	7.5k	10m		140B	700mØ	240	25A		40m	120J	300			Si	S120a☑#
24	SCDAS3	300	200	55A	900			150A				50u	500u	100A	300			Si	M495
25	SCNAS3	300	200	55A	900			150A				50u	500u	100A	300			Si	M495
26	SCPAS3	300	200	55A	900			150A				50u	500u	100A	300			Si	M495
27#	1S1648	300	200	60A	4 0k			150J	1.2	200	25A		30	150J	300			Si	S199h
28	DRS203	300	200	110C	3.5k	8.3m	220	175J	1.40	200 †	110C	5.0m	15m	110C	300			Si△	S210a☑
29	200UB30	300	200	115C	3.5k§	8.3m		165J	1.25	200 †	115C		10m☑	115C	300			Si*	S279☑
30#	S3BN200	300 %	200	120B	4.0k		250	150B	.60 Ø	190	25B		40m	125C	300			Si	F19a
31	411F	300	200	130	3.0k	8 3m		200J	1.5	125	130C		8.0m☑	130C	300			Si	DO8
32	MR1225FB	300	200	138C	3 6k	8.3m		190C	40 Ø	160	150C		20m	150C	300			Si△	M227
33	MR1225FL	300	200	138C	3.6k	8.3m		190C	.40 Ø	160	150C		20m	150C	300			Si△	M228
34	MR1225SB	300	200	138C	3.6k	8.3m		190C	40 Ø	160	150C		20m	150C	300			Si△	S199a
35	MR1225SL	300	200	138C	3 6k	8 3m		190C	40 Ø	160	150C		20m	150C	300			Si△	S87b
36#	SSiK0420	300	210	110C	2 7k	10m		150J	1.3	500	20J	200u	2 0m	150J	300			Si△*	M444#
37	410F	300	220	110C	3 0k	8 3m		190J	1.3	150	110C		10m☑	110	300			Si	DO8
38	1N1674	300 *	240	120C	1.8k			190J	1 25	300	25J		50m	25	300			Si	S14f
39	1N3166	300 *	240	120C	3 0k			190J	1.25	240	25C		16m	125C	300			Si	S14f2
40	1N1334	300 *	240	125C	1.8k			190J	1.25	300	25J		50m	25	300			Si	S14f2
41	1N1380	300 *	240	125C	1 8k			190J	1 25	300	25J		50m	25	300			Si	S14h
42	240E30	300	240	150C	7.5k	4 0m		190J	1.0	240	25C		50m	25C	300			Si	S83△☑
43	240F30	300	240	150C	7 5k	4 0m		190J	1.0	240	25C		50m	25C	300			Si	M56a△☑
44	ST830	300	250	25A	5 0k			190J	1.2	250	25		50m	25	300			Si	Z27
45	ST930	300	250	25A	5 0k			190J	1 2	250	25		50m	25	300			Si	Z28
46▼#	251F3S	300	250	50	4 5k			175J	1.45	1.0k	25J							Si	S12f☑
47	A96C	300	250	70C	3.3k	8 3m		125J	1.25	250	25		16m	70C	300			Si	S120b
48	A97C	300	250	70C	3.3k	8.3m		125J	1 25	250	25J		16m	70C	300			Si	S120b
49	1N2059	300	250	100C	4 5k§			200C	1 3 †	250	135C		17m	135	240			Si	DO9
50	CH119C	300 †	250	100C	4.0k			200S	1.3	250	25C		12m	100C	300			Si	DO8☑
51#	70M30	300	250	107B	4 0k	10m		175A	1.5 †	800	175J		20m		300			Si	S8n
52	DRS243	300	250	110C	4 5k	8 3m	280	175J	1 40	250 †	110C	5 0m	15m	110C	300			Si△	S210a☑
53	S5330	300	250	120C	4.0k		4 Ø☑	175J	60 Ø	250	25A		10mØ	150C	300	550		Si△	DO9△
54	1N3737	300	250	130C	4 5k	8 3m		200C	1.1 △	250	130C		16m	130B	300			Si	DO9☑
55	A90C	300	250	130B	4 5k	8 3m		200J	400mØ	250	130B		16m	130B	300			Si	DO9
56	A91C	300	250	130B	4 5k	8 3m		200J	400mØ	250	130B		16m	130B	300			Si	DO9
57	70S30	300	250	135C	4 5k§	8.3m		200J	1 25	250 †	135C		25m☑	135C	300			Si*	S8b2☑
58	70T30	300	250	135C	4.5k§	8.3m		200J	1.25	250 †	135C		25m☑	135C	300			Si*	S8b1☑
59#	S21N300H	300	270	75C	3 4k	10m		175J	1.45	600	25A	30m	80m	175C	300			Si△	M199
60	1N4049	300	275	120C	5 0k			190J	1.35	275	120C		15m	120C	300			Si	DO9☑
61	CS131C	300 †	275	120C	4.0k			200	1 3	275	25C		16m☑	130C	300			Si	DO9
62	275E30	300	275	150C	7.5k	4.0m		190J	1 0	275	25C		50m	25C	300			Si	S83△☑
63	275F30	300	275	150C	7 5k	4 0m		190J	1.0	275	25C		50m	25C	300			Si	M56a△☑
64#	S3EN270	300 %	290	125B	1 5k	20m		160B†	.975	340			50m	125B	300			Si*	M307
65#	S3FN270	300 %	290	125B	1 5k	20m		160B†	.975	340			50m	125B	300			Si*	M357c
66#	S3GN270	300 %	290	125B	1 5k	20m		160B†	.975	340			50m	125B	300			Si*	M357a
67♦#	S3HN270	300 %	290	125B	7.2k	10m		160B†	975m	340			50m	125B	300			Si*	M366a
68	S3EN301	300	300	100B	5 1k	10m	410	100B	65 Ø	300	100B		35m	100B	300			Si	M307
69	S3FN301	300	300	100B	5 1k	10m	410	100B	65 Ø	300	100B		35m	100B	300			Si	M248
70	S3GN301	300	300	100B	5 1k	10m	410	100B	.65 Ø	300	100B		35m	100B	300			Si	M248a
71	S3HN301	300	300	100B	5 1k	10m	410	100B	65 Ø	300	100B		35m	100B	300			Si	M370
72	300U30A	300 †	300	120C	5 0k§	8 3m		200J	1 4	300 †	120C		16m☑	120C	300			Si*	DO9☑
73	MR1235FB	300	300	135C	5 0k	8 3m		190J	40 Ø	240	150C		35m	150C	300			Si	M227a☑
74	MR1235FL	300	300	135C	5.0k	8.3m		190J	.40 Ø	240	150C		35m	150C	300			Si	M228b☑
75	MR1235SB	300	300	135C	5 0k	8 3m		190J	40 Ø	240	150C		35m	150C	300			Si	S199b☑
76	MR1235SL	300	300	135C	5 0k	8 3m		190J	40 Ø	240	150C		35m	150C	300			Si	S87c☑
77#	S3EN290	300 %	310	125B	1 6k	20m		160B†	.975	340			50m	125B	300			Si*	M307
78#	S3FN290	300 %	310	125B	1 6k	20m		160B†	975	340			50m	125B	300			Si*	M357c
79#	S3GN290	300 %	310	125B	1 6k	20m		160B†	975	340			50m	125B	300			Si*	M357a
80♦#	S3HN290	300 %	310	125B	7 2k	10m		160B†	975m	340			50m	125B	300			Si*	M366a
81#	S3EN310	300 %	330	125B	1 7k	20m		160B†	90	400			50m	125B	300			Si*	M307
82#	S3FN310	300 %	330	125B	1 7k	20m		160B†	90	400			50m	125B	300			Si*	M357c
83#	S3GN310	300 %	330	125B	1 7k	20m		160B†	90	400			50m	125B	300			Si*	M357a
84#	S3HN310	300 %	330	125B	1 7k	20m		160B†	.90	400			50m	125B	300			Si*	M366a
85#	S3EN300	300 %	340	125B	2.0k	20m		160B	900m	340			50m	125	300			Si*	M307
86▼#	S3HN300	300 %	340	125B	7 2k	10m		160B	900m	340			50m	125	300			Si*	M307
87#	S3EN350	300 %	370	125B	2 0k	20m		160B†	90	400			50m	125B	300			Si*	M307
88#	S3FN350	300 %	370	125B	2 0k	20m		160B†	90	400			50m	125B	300			Si*	M357c
89#	S3GN350	300 %	370	125B	2 0k	20m		160B†	.90	400			50m	125B	300			Si*	M357a
90♦#	S3HN350	300 %	370	125B	7 8k	10m		160B†	900m	400			50m	125B	300			Si*	M366a
91	A396C	300	400	70C	3.3k	8.3m		125C	1 3 Ø	400	25		16m	70C	300			Si	M377a
92	1N3588	300	400	120C				190J	1.1	520	25C		75m	25C	300			Si	S83a△
93	A390C	300	400	145	4 5k			200J	40	400	130C		16m	130C	300			Si△	M377a
94	MR1245FB	300	400	150C	8 0k	8.3m		190J	40 Ø	400	150C		50m	150C	300			Si	M227b☑
95	MR1245FL	300	400	150C	8 0k	8 3m		190J	.40 Ø	400	150C		50m	150C	300			Si	M228a☑
96	MR1245SB	300	400	150C	8 0k	8.3m		190J	.40 Ø	400	150C		50m	150C	300			Si	S199c☑
97	MR1245SL	300	400	150C	8 0k	8 3m		190J	.40 Ø	400	150C		50m	150C	300			Si	S87d☑
98	450E30	300	450	150C	12k	4.0m		190J	1.1	450	25C		75m	25C	300			Si	S83a△☑
99	450F30	300	450	150C	12k	4.0m		190J	1.1	450	25C		75m	25C	300			Si	M56b△☑
100	783F	300	485	130C	5 0k	8.3m		190J	1.9	400	130C		10m☑	130C	300			Si	
101#	S3GR311	300	490	100B	7 5k			175J	670mØ	490			25m		300			Si△	M522
102#	S3HR311	300	490	100B	7.5k			175J	670mØ	490			25m		300			Si△	M523
103	500UDF30A	300 †	500	130C	9.0k§	8.3m		200J	1.35 †	500 †	130C		30m	130C	300			Si	M448$
104	A295C	300	500	130C	7 0k	8 3m		200J					15mØ	130C				Si	S132a
105	A296C	300	500	130C	7.0k	8 3m		200J					15mØ	130C				Si	S247
106	784F	300	650	150C	8 0k	8.3m		190J	1.3	500	150C		10m☑		300			Si	
107	MR1265	300	650	150C	12k	8 3m		190J	.40 Ø	650	150C		100m	150C	300			Si	M228c☑
108#	S3BR502	300	750	100B	11k	10m	900	165J	625mØ	700			20m	100B	300			Si△	M429
109	MR2083HA	300 †	750	150C	12k	8 3m		150A	50 Ø	750	150C	4.0m	80m	150C	300			Si△	M228c#☑
110#	S3BR501	300	830	100B	16k	10m	850	165J	470mØ	800			20m	100B	300			Si△	M429☑

SYMBOLS AND CODES EXPLAINED IN INTERPRETER

5. RECTIFIERS

IN ORDER OF (1) PIV, (2) MAX AVG FWD CURRENT (3) TEMPERATURE, and (4) TYPE No.

LINE No.	4 TYPE No.	1 PIV (V)	MAX AVG FWD DC CURRENT 2 Io (A)	3 at TEMP (°C)	MAX RATINGS @ 25°C SURGE CUR. PEAK 1 Cy (A)	PULSE WIDTH (s)	DISS. (W)	MAX. TEMP (°C)	MAXIMUM FORWARD VOLTAGE DROP Vf (V)	at If (A)	at TEMP (°C)	MAX. REVERSE CURRENT Ir @25°C & Vr (A)	Ir at T & Vr (A)	TEMP T (°C)	TEST VOLT Vr (V)	AVALANCHE RATINGS MAX V BKDN. (V)	MIN SLOPE (A/V)	MAT.	DESCRIPTION DWG No.
1	A540C	300	1 0k		10k			200J	1 08		150C		50m	200J	400			Si△	M463
2	MR1295	300 $	1000	150C	18k	8.3m		190C	.40 Ø	1k	150C		200m	150C	210			Si△	M306†
3	MR2103HA	300 †	1100	150C	18k	8.3m		150A	50 Ø	1.1k	150C	5.0m	100m	150C	300			Si△	M427#⊠
4	A570C	300	1 5k	75C	15k	8 3m		200J	400mØ		130C		50m	200J	300			Si	M463
5#	B80C600†	320	500mØ	45A	30	10m		150J										Si△	M550
6#	S4M2	320	.60	25A	8 0		7 3	125				1 0u	05m	125J	320			Si△	DO14
7#	S4CN1	320	1 5	40A	45		1 7	150A				10u	25m	150J	320			Si△	A31n
8#	B80C3200-2200†	320	2.2 Ø	45A	100	10m		150J										Si△	M551
9#	B80C5000-3000†	320	3 0 Ø	45A	100	10m		150J										Si△	M552
10	S4BR25	320 †	40	120B	250	20m		140B	1 2	40			20m		320			Si*	S122⊠
11#	S4CR25	320 †	40	120B	250	20m		140B	1 2	40			20m		320			Si*	S123⊠
12#	S4DR25	320 †	40	120B	250	20m		140B	1 2	40			20m		320			Si*	S125⊠
13#	S4ER25	320 †	40	120B	250	20m		140B	1.2	40			20m		320			Si*	S124⊠
14#	S4BR30	320 †	44	125B	250	20m		140B	1 1	44			16m		400			Si*	S122⊠
15#	S4CR30	320 †	44	125B	250	20m		140B	1 1	44			16m		400			Si*	S123⊠
16#	S4DR30	320 †	44	125B	250	20m		140B	1 1	44			16m		400			Si*	S125⊠
17#	S4ER30	320 †	44	125B	250	20m		140B	1 1	44			16m		400			Si*	S124⊠
18#	S4AN70	320 †	77	115B	450	20m		150B	1.0	70			30m		400			Si	F19
19#	S4BR70	320 †	77	115B	450	20m		150B	1 0	70			40m		400			Si	F19
20#	S20N400H	320	170	85C	3 5k§	8.0m	320	150	1 2	170	85C				240			Si	M199
21#	S4AN125	320 †	175	125B	1 1k	20m		150B	1 1	175			30m		400			Si	F19
22#	MA203	330	15	50$	1 5			100				50u			330			Si△	A1ft
23	G5F3	350		150C	1 5k			175J	1 3	200	25C		5.0m	150C	350			Si	DO8
24#	1S205	350	10	25	40	1		150	1 2	10	25A	10u		25A	300			Si*	A1ce
25	1N362	350	10	100$				150C	2.0	20	25C		250uØ	100A	350			Si	DO2
26	1N362A	350	.15	100A$	10			150	60 Ø	25	25C	1 0u	35u	100A	350			Si	DO2
27	PS035	350	.20	25A	3 2	10m		200A	1.0	.10	25A		100u⊠	100A	350			Si	A60p
28	1N2019	350	20	150A$				175A	1.5	50	25	1 0u	50m⊠	150	350			Si	DO12
29	1N3078	350	.20	150A$				175J	1 5	50	25		50m	150	350			Si	A84
30	1N319A	350	25	100$	10			200	.60 Ø	.40	25C	1 0uØ	40uØ	100A	350			Si	DO2
31	1N319	350	25	150$				200	2 0	30	25C		300uØ	100A	350			Si	DO2
32	AM435	350	.40	25A				150A	1 2	40	25A		30m⊠	150A	350			Si	DO7
33	PS435	350	.40	25A	3 3	10m		200A	1 5	.50	25A		50m⊠	150A	350			Si	A60p
34	1N326	350	40	100$				200	2 0	65	25C		300uØ	100A	350			Si	DO2
35	1N326A	350	40	100$	10			200	.60 Ø	65	25C	1 0u	40u	100A	350			Si	DO2
36	1N3183	350	50	25A	4.0	1		150A	1 0	25	25	30u	02m	100	350			Si	M82
37	PS135	350	.50	30A	3 3			200A	1 5	50	25A		50m⊠	150A	350			Si	A47
38	ED3003	350 *	.50	50	20	8 3m	1 0	100A	1 5 △	1 0	25	10u	03m	100	300			Si△	A1bk
39	1N1650	350 †	75	50A	15			165A	.50 Ø	25	150A		30mØ	150A	350			Si	A53
40	ED3003A	350 *	75	50	25	8 3m	1 0	100A	1 3 △	1 0	25	10u	.03m	100	300			Si△	A1bk
41	LA500	350	75	50A	35			150C	1 0	75	25A	2.0u				599			A1ew
42	AM035	350	75	150A				150A	1 0	25m	2 5A		300u⊠	150A	350			Si	DO7
43	ED3003B	350 *	1 0	50	30	8 3m	1 0	100A	1 1 △	1.0	25	10u	.03m	100	300			Si△	A1bk
44	LAA500	350	1 0	50A	50			150C	90	1.0	25A	2 0u				599			A1bc
45	E1F3	350	1 0	150	200			175	1 3	1 0	150	10u	1.0m	150	350			Si	DO4
46	LAB500	350	2 0	50A	80			150C	1 0	2 0	25A	15u				599			A1bc
47	LAC500	350	3.0	25A	300			150C	1 0	3.0	25A	45u				599			A1ey
48	E2F3	350	3.0	150	200			175	1 3	3 0	150	10u	1.0m	150	350			Si	DO4
49	E3F3	350	5 0	150	200			175	1 3	5 0	150	10u	1 0m	150	350			Si	DO4
50	F1F3	350	5 0	150C	200			175J	1 3	30	25C		1.0m	150C	350			Si	DO5
51	E4F3	350	6.0	150	200			175	1 3	6 0	150	10u	1 0m	150	350			Si	DO4
52	KS602GA	350	6 0	150C$	75			175C	1.2 △	6 0	25		1 0mØ	150C	350			Si△	DO4
53	E5F3	350	8 0	150	200			175	1 3	8.0	150	10u	1.0m	150	350			Si	DO4
54	1N2799	350	8 5	25A	75			175A	1.25	15	150C		5.0m	150C	350			Si	DO5
55	1N2024	350 †	10	150C	110	8 3m		175C	1.5	25	25		5.0m	150C	350			Si	DO5
56	E6F3	350	10	150	200			175	1.3	10	150	10u	1 0m	150	350			Si	DO4
57	F2F3	350	10	150C	200			175J	1.3	30	25C		1.0m	150C	350			Si	DO5
58	E7F3	350	12	150	200			175	1.3	12	150	10u	1.0m	150	350			Si	DO4
59	US123GA	350	12	150C$	240			175C	1.2 △	12	25A		3 0mØ	150C	350			Si△	DO4
60	F3F3	350	15	150C	200			175J	1 3	30	25C		1 0m	150C	350			Si	DO5
61	2035	350	16 5	25A	200		4 0 Ø	150A	60 Ø	19	25A		1.0mØ	150C	350	600		Si△	DO4△#
62#	B4Y20-350M	350	20	25A	80 †			150S										Si	M479a
63	F4F3	350	20	150C	600			175J	1 3	50	25C		2.0m	150C	350			Si	DO5
64	2135	350	22	120C	200			175J	60 Ø	22	25A		1 0mØ	150C	350	600		Si△	DO4△
65	S2135	350	22	120C	200		1 ØØ	175J	.60 Ø	22	25A		1 0mØ	150C	350	600		Si△	DO4△
66	303G	350 *	22	135C	12		30	190J	1 4	30	25	10u			350			Si	S29
67	F5F3	350	25	150C	600			175J	1.3	90	25C		2 0m	150C	350			Si	DO5
68	3135	350	30	25A	200		4.0 Ø	50A	.60 Ø	34	25A		1.0mØ	150C	350	600		Si△	DO5#△
69	G3F3	350	30	150C	1.5k			175J	1 3	200	25C		5 0m	150C	350			Si	DO8
70	3235△	350	33	25A	600		7 0 Ø	50A	.60 Ø	45	25A		2.0mØ	150C	350	600		Si△	DO5△#
71	302G	350 *	35	135C	210		55	190J	1.2	50	25	20u			350			Si	S29
72	TR352	350	37	65C				175S	1.5	50	25C		5.0m⊠	150C	350			Si	DO5
73	G4F3	350	40	150C	1 5k			175J	1 3	200	25C		5 0m	150C	350			Si	DO8
74	1N2452	350	45	60C	300			175B	1 1	20	25		5.0mØ	150B	350			Si△	DO5
75	S3435	350	50	120C	600		2 ØØ	175J	.60 Ø	50	25A		2.0mØ	150C	350	600		Si△	DO5△
76	1N1683	350	50	150C	700	8 3m		165C	1 2	1 1	150C		25m	150C	350			Si	S8q
77	MR1206	350	50	150C	800	8 3m		190J	.40 Ø	50	150C		10m	150C	350			Si△	M226
78	1N2464	350	60	60C	450			175B	1 1	30	25		5.0mØ	150B	350			Si△	DO5
79	1N2134	350	60	100C	700 §			175C	1 4	60	115C		30m△	175C	280			Si	DO5
80	1N2134A	350	60	100C	900 §			200C	1 3	60	140C		30m△	200C	280			Si	DO5
81	H5F3	350	60	150C	3.0k			175J	1 3	300	25C		10m	150C	350			Si	DO9
82	TR353	350	65	75C				175C	1 5	100	25C		5 0m⊠	150C	350			Si	DO5
83	300G	350 †	70	150C	1 2k			190J	1 25	70	150C		30m	150C	350			Si	S14b
84	J4F3	350	70	150C	4 0k			175J	1 2	300	25C		10m	150C	350			Si	DO9
85	J5F3	350	70	150C	4 0k			175J	1.2	300	25C		10m	150C	50			Si	DO9
86	1N2432	350	100	75C	950			175B	1 1	50	25		10mØ	150B	350			Si△	DO8
87	MR1216SB	350	100	135C	2 0k§	8 3m	160	190J	400mØ	80 †	150C		15m	150C	350			Si△	S199
88	MR1216SL	350	100	135C	2 0k§	8 3m	160	190J	400mØ	80 †	150C		15m	150C	350			Si△	S87a
89	MR1816SB	350	100	135C	2 0k§	8 3m	160	190J	400mØ	80 †	150C		15m	150C	350			Si△	S199m
90	MR1816SL	350	100	135C	2.0k§	8 3m	160	190J	400mØ	80 †	150C		15m	150C	350			Si△	S87f
91	S4235	350	104	120C	1 5k		2 5 ØØ	175J	.60 Ø	104	25A		5.0mØ	150C	350	600		Si△	DO8△
92	1N2442	350	150	75C	1 2k			175B	1 1	70	25		10m	150B	350			Si△	DO8
93	S5135	350	160	120C	2 2k		3 ØØ	175J	60 Ø	160	25A		10mØ	150C	350	600		Si△	DO9△
94	1N3266	350 †	160	125C	2 0k			190J	1 25	160	125C		12m	125C	350			Si	DO9⊠
95	322G	350	160	125C	1 3k			190J	1 3	210	25		40m	25	350			Si	S8e
96	MR1226FB	350	200	138C	3.6k	8 3m		190C	.40 Ø	160	150C		20m	150C	350			Si△	M227
97	MR1226FL	350	200	138C	3 6k	8 3m		190C	40 Ø	160	150C		20m	150C	350			Si△	M228
98	MR1226SB	350	200	138C	3 6k	8 3m		190C	40 Ø	160	150C		20m	150C	350			Si△	S199a
99	MR1226SL	350	200	138C	3 6k	8 3m		190C	40 Ø	160	150C		20m	150C	350			Si△	S87b
100	1N3167	350 *	240	120C	3.0k			190J	1 25	240	25C		16m	125C	350			Si	S14f2
101	339G	350 *	240	120C	1 8k			190J	1 25	300	25J		50m	25	350			Si	S14f
102	1N2060	350	250	100C	4 5k§			200C	1.3 †	250	135C		17m	135	280			Si	DO9
103	S5335	350	250	120C	4 0k		4 ØØ	175J	60 Ø	250	25A		10mØ	150C	350	600		Si△	DO9△
104	70S35	350	250	135C	4.5k§	8 3m		200J	1.25	250 †	135C		25m⊠	135C	350			Si*	S8b2⊠
105	70T35	350	250	135C	4.5k§	8 3m		200J	1.25	250 †	135C		25m⊠	135C	350			Si*	S8b1⊠
106	MR1236FB	350	300	138C	5.0k	8 3m		190C	.40 Ø	240	150C		35m	150C	350			Si△	M227a
107	MR1236FL	350	300	138C	5.0k	8.3m		190C	.40 Ø	240	150C		35m	150C	350			Si△	M228b
108	MR1236SB	350	300	138C	5.0k	8.3m		190C	.40 Ø	240	150C		35m	150C	350			Si△	S199b
109	MR1236SL	350	300	138C	5.0k	8.3m		190C	.40 Ø	240	150C		35m	150C	350			Si△	S87c
110	MR1246FB	350	450	145C	8.0k	8.3m		190C	.40 Ø	400	150C		50m	150C	350			Si△	M227b

SYMBOLS AND CODES EXPLAINED IN INTERPRETER

5. RECTIFIERS

IN ORDER OF (1) PIV, (2) MAX AVG FWD CURRENT (3) TEMPERATURE, and (4) TYPE No.

LINE No	4 TYPE No	1 PIV (V)	MAX AVG FWD DC CURRENT 2 Io (A)	3 at TEMP (°C)	MAX RATINGS @ 25°C SURGE CUR. PEAK 1 Cy (A)	PULSE WIDTH (s)	DISS. (W)	MAX TEMP (°C)	MAXIMUM FORWARD VOLTAGE DROP Vf (V)	at If (A)	at TEMP (°C)	MAX. REVERSE CURRENT Ir @25°C & Vr (A)	Ir at T & Vr (A)	TEMP T (°C)	TEST VOLT Vr (V)	AVALANCHE RATINGS MAX V BKDN (V)	MIN SLOPE (A/V)	MAT.	DESCRIPTION DWG. No.
1	MR1246FL	350	450	145C	8 0k	8 3m		190C	40 Ø	400	150C		50m	150C	350			Si△	M228a
2	MR1246SB	350	450	145C	8 0k	8 3m		190C	40 Ø	400	150C		50m	150C	350			Si△	S199c
3	MR1246SL	350	450	145C	8 0k	8 3m		190C	40 Ø	400	150C		50m	150C	350			Si△	S87d
4	MR1266	350	700	145C	12k	8 3m		190C	40 Ø	650	150C		100m	150C	50			Si△	M228c
5	MR1296	350 $	1000	150C	18k	8 3m		190C	40 Ø	1k	150C		200m	150C	245			Si△	M306†
6	1N2115	365	30 Ø	50A	10			100A	.80 Ø	20	25		25m	85	365			Si△	M21
7	1N255	380	.40	135C	1 5			150A	1 5	.50	135C		01m	135C	350			Si	S11a
8	1N158	380	50	55A	25			85S	1 4	50	55A		.80m	55A	380			Ge	M418
9	G5G3	400		150C	1 5k			175J	1.3	200	25C		5.0m	150C	400			Si	DO8
10	S238	400	20m	25$	15				1 2	30m	25	1 0m			400			Si	A54
11	1N883	400	05	25A$	50			200S	60	.05			02m		400			Si	A1bz
12	S13	400	05	25	15				1 2	08	25	10u			400			Si	A54
13	P1H5	400	05	50	30			175	1 0	.05	25	10u	50m	100	400			Si	M343
14	1N683	400	075	150A	3 0			175A	1 0	.20	25A		20m	150A	400			Si	DO7
15	1N872	400	10	25A$	1 0			200S	60	10			02m		400			Si	A1bz
16	10R4B	400	10	25	60			175	2 0	10	25	5.0u	50m	100	400			Si	
17	PS2414	400	10	25A$					2 0	5m	25A	5 0u			400			Si	C15
18	S204	400	.10	25$	15				1 2	.15	25	100u			400			Si	A54
19	P2H5	400	10	50	30			175	1 0	10	25	10u	50m	100	400			Si	M343
20	40265	400	125m	65A	30m	2 0m		175A	1 0	125m	25A	6.0u	400u	65A	400			Si△	C105
21	1N3756	400	13	65A	30			100A	1 0	.13	25	5.0u			400			Si△	C13
22	1N861	400	15	25A$	1 5			200S	60	15			02m		400			Si	A1bz
23	M70A	400	15	50	50	8 3m		175	1 2		25	10u						Si	A3h
24#	SM150A	400	15	50	32	20m	15	120	1 0	20			50m	10	400			Si	A138a
25#	SH1	400	15	70A	15	10m		100S	1 0	30	25A	10u	.20m	100A	400			Si△	A171
26	CER70A	400	15	75A	48	4 0m		150A	1 2	15	100	10u△	.20m	100	400			Si	DO27
27	1N684	400	15	150A	5 0			175A	1 0	40	25A		20m	150A	400			Si	DO7
28	1N850	400	20	25A$	2 0			200S	60	20			02m		400			Si	A1bz
29	A1E1	400	20	25	60			175A	50		150	1 0u	50m	150	400			Si	A84a
30	A1E5	400	20	25	60			175A	50		150	5 0u	50m	150	400			Si	A84a
31	A1E9	400	20	25	60			175A	50		150	10u	50m	150	400	100	200u	Si	A84a
32	B1E1	400	20	25	60			175A	50		150A	1 0u	50m	150	400			Si	A1rx
33	B1E5	400	20	25	60			175A	50		150A	5.0u	50m	150	400			Si	A1rx
34	B1E9	400	20	25	60			175A	50		150A	10u	50m	150	400	100	200u	Si	A1rx
35#	BY183-400	400	200m	25A	2 0	10m		100J	1 2	100m		1 0u			400			Si△	DO7
36#	M42	400	20	25A	3 0	10m	25	150A†	1 0	20 †	25		15m	125A	400			Si△	DO7
37	PS040	400	20	25A	3 2	10m		200A	1 0	10	25A		100u⊘	100A	400			Si	A60p
38	TM43	400	20	25C				125C	2 0	20	100C		30m⊘	100C	400			Si	S145
39	K1E5	400	20	50	60			150C	2 0	20	25	5 0u	50m	100C	400			Si	
40	P3H5	400	20	50	30			175	1 0	20	25	10u	50m	100	400			Si	M343
41	S103	400	20	70$	15				1 3	30	25							Si	A54
42	S94	400	20	85A$	5 0			85A	1 5				1 0m	85A	400			Si	DO2
43	AM43	400	20	100C$	8 0 §	8 0m		125A	1 25	20	25C		30m⊘	100C	400			Si	DO4
44	1N333	400	20	150C$	5 0			175B	2 0	40	25		20m⊘	150C	400			Si	DO4
45	1N342	400	20	150C$	5 0			175B	2 0	40	25		.50m⊘	150C				Si	DO4
46	1N2020	400	20	150A$				175A	1.5	50	25	1 0u	50m⊘	150	400			Si	DO12
47	1N3079	400	20	150A$				175J	1 5	50	25		.50m	150	400			Si	A84
48	CODI554	400	25	25$	20			100	1 1	40	25	10u			400			Si	A52g
49	S19	400	25	25	15			150A	1 2	40	25	1 5m			400			Si	A54
50	S219	400	25	25$	15				1 3	40	25	100u			400			Si	A54
51	M70B	400	25	50	50	8 3m		175	1.2		25	10u						Si	A3h
52	CER70B	400	25	75A	48	4 0m		150A	1 2	25	100	10u△	20m	100	400			Si	DO27
53	1N533	400	30	25A$	3 0	3.0m		150A	2 0	30	25A	15u			400			Si	DO3
54	1N1705	400	.30	50A	8 0			125A	1 7	1 0	25A		30m⊘	100A	400			Si	A53
55	P4H5	400	30	50	30			175	1 0	30	25	10u	50m	100	400			Si	M343
56	1N443	400 †	30	100A	15			165A	1 5	30	25	1 5u			400			Si	DO2
57	1N604	400	30	100A	2 0	100m		170S	1 5	20	25	25u△			400			Si	DO1
58	1N604A	400	30	100A	2 0	100m		170S	1 5	40	25	1 5u△			400			Si	DO1
59	S106	400	30	100$	15				1 2	30	25	100u			400			Si	A54
60	1N647	400	40	25A	3 0	15m	60	150A	1 0	40	25	20u	02m	100	400			Si△	A1
61	1N673	400 ⊘	40	25A	3 0		25	200	1 0	25		1 0u			300			Si	A87
62#	1S113⊘	400	40	25A	8 0			150A	1 0	40	25A	20u	01m	100	400			Si△	A1
63	AM440	400	40	25A				150A	1 2	40	25A		30m⊘	150A	400			Si	DO7
64#	BYX60-400	400	400m	25A	2 5	1 0	600m	125A	1 2	400m	25A	500n	50u	100A	400			Si△	DO7
65#	M4HZ	400	40	25C	3 0	10m		150C†	1 0	40 †	25	10u		125A	400		10u△	Si△	DO7
66	PS440	400	40	25A	3 3	10m		200A	1 5	.50	25A		50m⊘	150A	400			Si	A60p
67	4D4	400	40	50	20			150A	1 3	1 0	25		30u	100	400			Si	A52a
68	K2E5	400	40	50	60			150C	2 0	.40	25	5 0u	50m	100C	400			Si	
69	P5H5	400	40	50	30			175	1 0	.40	25	10u	50m	100	400			Si	M343
70	S104	400	40	70$	15				1 2	.65	25	25u			400			Si	A54
71	AM42	400 †	40	100C$	10 §	8 0m		125A	1 25	.40	25C		30m⊘	150C	400			Si	DO4
72#	MT44	400	40	100A	2 0	1	50	200A	1 2	40 †	25		10m	150A	400			Si△	DO7
73	S102	400	40	100$	15				1 2	65	25		100u	100	400			Si	A54
74	JAN1N255	400 *	40	135A$	1 5	1		135A	1 5	.50	25	10u			350			Si	S11a
75	1N332	400	40	150C$	10			175B	2 0	.80	25		20m⊘	150C	400			Si	DO4
76	1N341	400	40	150C$	10			175B	2 0	.80	25		50m⊘	150C	400			Si	DO4
77	A2E4	400	475	25	40	8 3m		175	1 2	50	25	1 0u	50m	150	400			Si	A84
78#	MA215	400	50		60		1 0	70A	1 0	.50	25	12u			400			Si△	C18h
79	1N1255	400	50	25A	15			165A	1 0 Ø	.50	25A		50m	125A	400			Si	A53
80	1N1255A	400 $	50	25A	5 0			175A	1 0	50	25							Si	A82d
81	1N2084	400	50	25$	15			150A	75 Ø	.50	25	350u⊘			400			Si	A53
82	BR24†	400	500m	25	20	8 0m		150	1 1	500m	50	5 0u			440			Si△	M533
83	CODI5544	400	50	25$	20			100	1 1	40	25	10u			400			Si	M45
84#	D45C	400	50	25A	30	10m	55	150A	1 2	50 †	25		15m	125A	400			Si△	A100
85#	J400	400	50	25A	10			175A	1 1	50	25A	5 0u		25A	400			Si△	DO7
86	MB263	400	.50	25	10	8 3m	2 0	175A	1 0	2 ⊘	25	1 0u	06m	100	400			Si	A60f
87	MT040	400	50	25A	10		50	175A	1 0	50 ⊘	25A	200n	15u	150A	400			Si	A60e
88	MT040A	400	50	25A	10		50	175A	1 0	50 ⊘	25A	25n	5 0u	150A	400			Si	A60e
89	S16△	400	500m	25	15			150A	1 2	800m	25	100u			400			Si	A54
90	S16A	400	50	25A$	15				1 2	80	25	50u			400			Si	A54
91	S235	400	50	25$	15				1 2	80	25	150u			400			Si	A54
92	WR400	400	.50	25A	3 3			200	1 25	50	25A		10m	100	400			Si	DO7
93	PS140	400	50	30A	3 3			200A	1 5	50	25A		50m⊘	150A	400			Si	A47
94	1N5216	400 †	50	40A	50 §			175A	1 2	1.0	75A		20m	75A	400			Si	A31r
95	5E4	400	500m	50	50 §			175	1 1	500m	50	2 0u	50u	100	440			Si△	DO27
96	5J4	400	500m	50	50 §			175	1 1	500m	50	2 0u	50u	100	440			Si△	DO15
97#	40AS	400	50	50A	15			100A	1 15	50	25A	10u			400			Si△	DO3
98	M70C	400	50	50	50	8 3m		175	1 2		25	10u						Si	A3h
99	P6H5	400	.50	50	30			175	1.0	50	25	10u	50m	100	400			Si	M343
100#	SO5-04	400	500m	50	45	10m		125	1 0	500m	25	10u		25	400				A171a
101#	SE05A	400	50	50	48	20m	55	120	1 1	50	50	10u			400			Si	M98a
102#	SW05A	400	50	50	48	20m	55	120	1 1	50	50	10u			400			Si	A221d
103	1N1711	400	50	55A	10			125A	1 3	1.0	25A		.40m⊘	150A	400			Si	A53
104#	DD 056	400	500m	55C	25	10m	600m		1 0	1 0	25	1 0u△			400			Si	A3k
105#	SD1△	400	50	60A	45	10m		100S	1 0	1.5	25A	10u			400			Si△	A221b
106#	1S1943	400	500m	65A	35			125J	1 2	500m	25A		400m	125J	400			S	A1bs
107#	1S314	400	50	70	25	10m		150	1 1	1 0	25	10u		25	400			Si	TO1
108#	1S1230	400	50	70	35	10m		150	1 1	1 0	25	10u		25	400			Si	DO1
109#	DD 006	400	50	70A$	45			100A	.82	50	25A		01m	100A	400			Si△	A3k
110	1N1763	400	50	75A	35			100A	3 0	50	25	100u	1 0m	100	400			Si△	A53

SYMBOLS AND CODES EXPLAINED IN INTERPRETER

5. RECTIFIERS

IN ORDER OF (1) PIV, (2) MAX AVG FWD CURRENT (3) TEMPERATURE, and (4) TYPE No.

LINE No.	4 TYPE No.	1 PIV (V)	MAX AVG FWD DC CURRENT 2 Io (A)	3 at TEMP (°C)	MAX RATINGS @ 25°C SURGE CUR. PEAK 1 Cy (A)	PULSE WIDTH (s)	DISS. (W)	MAX. TEMP (°C)	MAXIMUM FORWARD VOLTAGE DROP Vf (V)	at If (A)	at TEMP (°C)	MAX. REVERSE CURRENT Ir @25°C & Vr (A)	Ir at T & Vr (A)	TEMP T (°C)	TEST VOLT Vr (V)	AVALANCHE RATINGS MAX V BKDN. (V)	MIN SLOPE (A/V)	MAT.	DESCRIPTION DWG. No.
1	1N3749	400	50	75A	20	8.0m		150A	1.5	.50	25A	5 0u			400			Si	A1cm
2	CER70C	400	50	75A	48	4 0m		150A	1 2	50	100	10u△	20m	100	400			Si	DO27
3	1T504	400 †	50 ∅	85A	35			100A	1.2	.30	25	10u	25m	100	400			Si	A3x
4	2T504	400 †	.50 ∅	85A	35			100A	1 2	30	25	10u	.25m	100	400			Si	DO1
5	3T504	400 †	.50 ∅	85A	35			100A	1.2	30	25	10u	25m	100	400			Si	DO13
6	4T504	400 †	50 ∅	85A	35			100A	1 2	30	25	10u	25m	100	400			Si	DO7
7	ERD400	400 †	50 ∅	85	35			100A	1 2	30	25	10u	25m	100	400			Si	M166
8	1N553	400 †	50	100A	4 0	3 0m		150A	1.5	50	25A	2.5u			400			Si	DO4
9	1N1033	400	50	100A	30 §	4 0m		150A	1 5	50	25A	200u			400			Si	A73b
10	1N1084	400	50	100A	30 §	4 0m		150A	1 5	500	25A	2 0m			400			Si	F22
11	1N1169A	400	50	100$	20			150	1 2	80	25C	100u		25A	400			Si	DO2
12	40S5	400	50	100				175J	1 3	1 8	25C		2 0m	25C	400			Si	S41b
13	CP100	400	50	100					1 0		25								M84ac
14	CP101	400	50	100					1 0		25								M84ad
15	EG100	400	50	100	50			125A	1 0	50	25	10m			400			Si	DO29
16	S100∅	400	50	100$	15				1 0	80	25	100u			400			Si	A54
17	S105	400	50	100$	15				1 2	55	25	25u			400			Si	A54
18	S108	400	50	100$	15				2 0	65	25	250u			400			Si	A54
19	S224△	400	50	100$	15				1 0	80	25	2 0u	300u	150	400			Si	A54
20	S254	400	50	100$	60				1 2	80	25		500u	100	400			Si	A54
21	TKF40	400	50	100A	30	8 3m		175A	1 1	1 0	25A	10u	50m∅	100A	400			Si	A84
22	1N3083	400	50	150A	15			200A	1 0	75	25A		20m	150A	400			Si	A84
23	JAN1N3190	400	50	150A$	30	8 3m		175A	1 0	75	25	5 0u	50m	150A	400			Si	A31a
24	1N3547	400	60	25A	15			200A	1 0	50	25A	20u	75m	175A	400			Si	A1
25	A2E1	400	60	25	60			175A	50		150	1 0u	50m	150	400			Si	A84a
26	A2E5	400	60	25	60			175A	50		150	5 0u	50m	150	400			Si	A84a
27	A2E9	400	60	25	60			175A	50		150	10u	50m	150	400	100	200u	Si	A84a
28	B2E1	400	60	25	60			175A	50		150A	1 0u	50m	150	400			Si	A1rx
29	B2E5	400	60	25	60			175A	.50		150A	5 0u	50m	150	400			Si	A1rx
30	B2E9	400	60	25	60			175A	50		150A	10u	50m	150	400	100	200u	Si	A1rx
31	ER41	400	60	25A$	15			150A	1 25	50	25		75u	100	400			Si	A3t
32#	S5M2	400	60	25A	8 0		7 3	125				1 0u	05m	125J	400			Si△	DO14
33	S16B	400	60	25A$	15				1 2	95	25	10u			400			Si	A54
34	S243	400	60	25$	15				1 2	95	25	100u			400			Si	A54
35	1N1695	400 †	60	50A	20			115A	60	25	100A		50m∅	100A	400			Si	DO3
36#	1S149	400	60	50A	20			120S	1 2	60	25A	30u	25m	100A	400			Si△	A50
37#	5D4	400	60	50A	40	10m		150S	1 2	3 0	25A		50m	100	400			Si	A1bp
38	K3E5	400	60	50	60			150C	2 0	60	25	5 0u	50m	100C	400			Si	
39	P7H5	400	60	50	30			175	1 0	60	25	10u	50m	100	400			Si	M343
40	SD94	400	60	50A	10			125A	1 5	90	25		80m	100	400			Si	DO3
41	SM240	400	60	50$	20			150	1 2	95	25	10u			400			Si	A84
42#	1HY40	400	60 ∅	75A	40	10m		150S	1 15	60	25A							Si△	DO3
43	CY40	400	60 ∅	75A	40	10m		150	1 15	60	75A				400			Si△	A31j
44	5MA4	400	625	100	50			140J	92	63	25		20m	100	400			Si	F29
45#	BY158	400	65	60	60	10m		130A	1 3	65	25	10u	10m	60	400	800		Si	DO29
46	1N1490	400 †	75	25A	15			140A	55 ∅	25	125A		30m∅	125A	400			Si*	DO3
47	1N2070	400	75	25A	22			100A	1 2	50	25A	10u	20m	100A	400			Si	A1es
48	1N2070A	400	75	25A	22			100A	1 0	50	25A	5 0u	.50m	100A	400			Si	A1es
49	1N2078	400	75	25A$									25m	100A	400			Si	A53
50	1N2107	400 ∅	75	25$				200	1 2	75	25	300u			400			Si△	A53
51	1N3240	400	75	25$	15				2 2	75			500u	150	400			Si	A1cs
52	1N3657	400	75	25A	15			200A	1 2	50	25A	10u	30m	100A	400			Si	A60
53	75R4B	400	75	25	60			175	2 0	75	25	5 0u	50m	100	400			Si	
54	A3E1	400	75	25	60			175A	50		150	1 0u	50m	150	400			Si	A84a
55	A3E5	400	75	25	60			175A	50		150	5 0u	50m	150	400			Si	A84a
56	A3E9	400	75	25	60			175A	50		150	10u	50m	150	400	100	200u	Si	A84a
57	B3E1	400	.75	25	60			175A	50		150A	1 0u	50m	150	400			Si	A1rx
58	B3E5	400	75	25	60			175A	50		150A	5 0u	50m	150	400			Si	A1rx
59	B3E9	400	75	25	60			175A	50		150A	10u	50m	150	400	100	200u	Si	A1rx
60	BR44†	400	750m	25	20	8 0m		150	1 1	750m	25	5 0u			440			Si△	M533
61	CODI534	400	75	25$	35			150	1 1	80	25	1 0u			400			Si	A52g
62	CODI614	400	75	25$	35			150	1 1	.80	25	1 0u			400			Si	A9j
63#	DD 236	400	75	25A$				100A	1 0	75	25A		1 0m	25A	400			Si	DO3
64#	DD 266	400	75	25$	25				1 0	30	25A		50u	100	400			Si	DO3
65	ED3004A	400	75	25	25			100A				10u	03m	100	400	450			A1bk
66	MB254	400	75	25	15	8 3m	2 0	175A	1 0	40 ∅	25	200n	15u	100	400			Si	A60f
67	MB264	400	75	25	15	8 3m	2 0	175A	1 0	4 ∅	25	1 0u	06m	100	400			Si	A60f
68	MB273	400	75	25	15	8 3m	2 0	175A	1 2	50 ∅	25	2 0u	75u	100	400			Si	A60f
69	PT540	400	75	25A	15	8 0m		125A	1 5	50	25A		50m∅	100A	400			Si	DO2
70	TS4	400	75	25A	25			125	1 2	75	25A	5 0u						Si	A1ev
71	UPI2070	400	750m	25A	22			100A	1 2	500m	25A	10u	200u	100A	400			Si	A1bg
72	UPI2070A	400	750m	25A	22			100A	1 0	500m	25A	5 0u	500u	100A	400			Si	A1bg
73	UT115	400	75	25A	15	8 3m	1 0		1 2	50 ∅	25A	2 0u	75u	100A	400			Si	A146f
74	UT213	400	750m	25A	15		1 0	175A	1 0	400m	25	200n	15u	100A	400			Si	A146f
75	XS16	400	75	25	15							100u			400			Si	A54
76	XS16A	400	75	25	15							50u			400			Si	A54
77#	ZS174	400	750m	25A	70 §			150A	1 2	750m	25A	5 0u	150u	100A	400			Si	A52f
78#	ZR64	400	75	35A	30	10m		150A	1 1	75	25A	10u	15m	100A	400			Si	A42
79	7E4	400	750m	50	60 §			175	1 1	750m	25	2 0u	50u	100	440			Si△	DO27
80	7J4	400	750m	50	60 §			175	1 1	750m	25	2 0u	50u	100	440			Si△	DO15
81	1N443B	400 †	75	50A	15			165A	1 5	75	25A	1 5u	200m	150A	400			Si△	DO3
82	1N540	400 †	75	50A	15			150A	1 0	50	25A	10u	20m	150A	400			Si△	DO3
83	1N1084A	400	75	50$	35				1 0	1 0	25	10u			400			Si	F22
84	1N1651	400 †	75	50A	15			165A	50 ∅	25	150A		30m∅	150A	400			Si	A53
85	1N2094	400 †	75	50A	15			100A	50 ∅	50	85A		25m∅	85A	400			Si△	M21
86	1N2116	400	75	50A	15			100A					70m△	100A	400			Si	DO12
87	1N2613	400	.75	50A	30			175A	1 1	50	25A	10u	50m	150A	400			Si	A31a
88	1N4367	400	75	50A	35	2 0m		175	1 1	75	25	1 0u	30m	175	400			Si	DO3
89#	1S034	400	75	50A	40			150A	1 25		25A	2 0u			400			Si△	A89
90#	1S43	400	75	50A	25			150J	1.2	1 0	25A	5 0u	25m	150A	400			Si△	DO1
91#	1S103∅	400	75	50A	40			150A	1 0		150A	10u			400			Si△	A89
92#	4G8	400	75	50A	15			150A	1 1	75	25A	1 5u			400			Si	DO3
93	A3E3	400 †	75	50A	35			175A	1 1	50	25	10u△	30m∅	150	400			Si	A84
94	A400	400	75	50	15		1 0	100	1 0	75	25	5 0u			400			Si	A3p
95	D400	400	75	50	15		1 0	175	1 0	75	25	5 0u			400			Si	A50
96	DK754	400	750m	50A	60			175A	1 2	750m	25A	10u	100u	100	400			Si	DO27
97	H400	400	75	50	15		1 0	175	1 0	75	25	5 0u			400			Si	DO3
98	M70	400	75	50	50	8 3m		175	1 2		25	10u						Si	A3h
99#	P400A	400	75	50	50	10m		150	1 0	1.0	25	10u			400			Si	DO29
100#	S1A	400	75	50	48	20m	83	120	1 1	75	50	10u			400			Si	A6a
101	SD94A	400	75	50A	15			125A	1 3	1 2	25		40m	100	400			Si	DO3
102	SD500	400	75	50	5.0			125A	1 2	50	25		70m	100	500			Si	A6a
103	SM40	400	75	50$	35			175†	1 1	50	25	10u			400			Si	A84
104#	SW1A	400	75	50	48	20m	83	120	1 1	75	50				400			Si	
105	TK40	400	750m	50A	15			175C	1 1	500m∅	25		300u∅	150	400			Si	A84
106	1N2483	400	75	55	30			150A	1 2	75	55		1 0m	55	400			Si	A3c
107	1N2487	400	75	55A	75	4 0m		150	1.0			1 0m			400			Si	A6b
108	1N3278	400	75	70A	25	8 0m		150A	1.2	75	25	5 0u			400			Si	A1cm
109	1N2862	400	750m	75A	16			125A	1.2	500m	75A		300u∅	100A	400			Si	DO1
110	1N3194	400	75	75A				100A	1 2	50	25A	5 0u	20m	75A	400			Si△	A50

SYMBOLS AND CODES EXPLAINED IN INTERPRETER

5. RECTIFIERS

IN ORDER OF (1) PIV, (2) MAX AVG FWD CURRENT (3) TEMPERATURE, and (4) TYPE No.

LINE No	4 TYPE No	1 PIV (V)	MAX AVG FWD DC CURRENT 2 Io (A)	3 at TEMP (°C)	MAX RATINGS @ 25°C SURGE CUR. PEAK 1 Cy (A)	PULSE WIDTH (s)	DISS. (W)	MAX. TEMP (°C)	MAXIMUM FORWARD VOLTAGE DROP Vf (V)	at If (A)	at TEMP (°C)	MAX. REVERSE CURRENT Ir @25°C & Vr (A)	Ir at T & Vr (A)	TEMP T (°C)	TEST VOLT Vr (V)	AVALANCHE RATINGS MAX V BKDN. (V)	MIN SLOPE (A/V)	MAT.	DESCRIPTION DWG. No.
1	1N3254	400	75	75A				100A	1 2	50	25A	5.0u	20m	75A	400			Si△	A50a
2	1N3640	400	75	75A	40			100	1.2	.75	25	10u			400			Si	DO13
3	CER70	400	75	75A	48	4.0m		150A	1.2	.75	100	10u△	.20m	100	400			Si	DO27
4	DI647	400	75	75A	25			150A	1 2	1.2	25	200n	15u	100	400			Si	A1bn
5	MR1337-5	400	.75	75A	30 §			175A	1.1	1 0	25A		25m	25A	400			Si	A31a
6	S84	400	75	80$	15				1 2	1.2	25	20u			400			Si	A54
7	1N1559	400	75	100C				150	1.4	60	25		1 0m	100A	400			Si	DO2
8	AM040	400	.75	150A				150A	1.0	25m	25A		300u∅	150A	400			Si	DO7
9	1N1103	400	.77	55A	15	8 0m		175A	1 5	12	25A		.30m	15A	400			Si	DO1
10	1N1169	400	79	80A	6 0			95A	90	50	25A		3.5m∅	100A	400			Si△	A3k
11#	D45CZ	400	80	25A	30	10m		150A	1 2	8 †	25	10u		125A	400	750		Si△	A100
12#	D48	400	80	25A	30	10m	1 0	150A	1.2	.8 †	25		15m	125A	400			Si△	A100
13	EM404	400	.80	25	50				1 1	80	25	10u	20m	85A	400				A1bg
14	PE404	400	.80	35A$	50			135A	1 1	80	25	10u	.20m∅	85A	400			Si	A3w
15	1N5058	400 †	.80	40A	30 §			125A	1 4 †	80	40A		.25m	100A	600			Si	DO29
16#	SR1FM8	400	800m	40A	50			130J	1 2 †§	3 0	25A	10u	300u	130J	400				A1bv
17#	1S1345	400	80	50A	40	8 3m		150J	1 2	3 0	25A	10u∅	50m∅	150J	400			Si	A89b
18	8D4	400	80	50	40			150A	1.1	1.0	25		.20u	100	400			Si	A52a
19	K4E5	400	.80	50	60			150C	2 0	.80	25	5 0u	.50m	100C	50			Si	
20#	SR1C8	400	800m	50A	40 §	8 3m		150J	1.2	3 0	25A	10u	500u	150J	400			Si△	A34d
21#	DH4R4	400	80	55	45	8 3m		150	.60 ∅	40	85		400u	85	280			Si	M152
22	1N612	400	.80	100A	3 0	8.3m		150A	1.5	20	25A	25u△			400			Si	DO4
23	1N612A	400	.80	100A	3.0	8 3m		150A	1.5	40	25A	1 5u△			400			Si	DO4
24	A4E1	400	85	25	60			175A	.50		150	1.0u	.50m	150	400			Si	A84a
25	A4E5	400	85	25	60			175A	.50		150	5.0u	.50m	150	400			Si	A84a
26	A4E9	400	85	25	60			175A	50		150	10u	50m	150	400	100	200u	Si	A84a
27	B4E1	400	85	25	60			175A	.50		150A	1 0u	.50m	150	400			Si	A1rx
28	B4E5	400	85	25	60			175A	.50		150A	5 0u	.50m	150	400			Si	A1rx
29	B4E9	400	85	25	60			175A	.50		150A	10u	.50m	150	400	100	200u	Si	A1rx
30	SM140	400	85	50$	45			150	1.0	1.5	25	10u			400			Si	A84
31	SM740	400	85	50	35			125A	1.0	50	25	01u	20m	150	400			Si	A84
32	ST14∅	400	95	55A	75	4 0m		100A	1.0			1 0m			400			Si	C23
33#	DS0.9-04A	400	1 0		40	10m		150	1 20	3 0		5 0u	1.0m	150					
34	NS1004	400	1 0		60	8 3m			1.2	1 0		10u			400				
35	1N1415	400	1 0	25	10			200	1.1	1 0	25		2.0u	25	320			Si	A154
36	1N3249	400	1.0	25$	20				1.1	1 0			500u	150	400			Si	A1cs
37	100R4B	400	1 0	25	60			175	2.0	1 0	25	5 0u	50m	100	400			Si	
38#	0702	400	1 0	25	30	10m		125J	1 1	1.0	25	5 0u			400			Si	A1bu
39	A5E1	400	1 0	25	60			175A	.50		150	1.0u	50m	150	400			Si	A84a
40	A5E5	400	1.0	25	60			175A	50		150	5 0u	50m	150	400			Si	A84a
41	A5E9	400	1 0	25	60			175A	.50		150	10u	50m	150	400	100	200u	Si	A84a
42	B5E1	400	1 0	25	60			175A	50		150A	1 0u	.50m	150	400			Si	A1rx
43	B5E5	400	1 0	25	60			175A	50		150A	5 0u	50m	150	400			Si	A1rx
44	B5E9	400	1 0	25	60			175A	50		150A	10u	50m	150	400	100	200u	Si	A1rx
45	BR54†	400	1 00	25	25	8 0m		150	1.10	1 0	25	5 0u			440			Si△	M533
46	BR84B†	400	1 00	25	50	8 0m		150	1 10	1 0	25	5 0u			440			Si△	M535
47#	E41	400	1.0	25A	50	10m		150A	1 2	1 0 †	25A	1 0u	200u	125A	400			Si△	DO29
48	EM504	400	1 0	25	50				1 1	1 0	25	1 0u	10m	100A	400				A1bg
49	MB247	400	1.0	25	20	8 3m	2 0	175A	1.0	.60 ∅	25	1 0u	75u	100	400			Si	A60f
50	NPC0400	400	1.0	25	25			150A	1 1	1 0	25	30u						Si	A3n
51	S1040	400	1 0	25A	35			175A	50 ∅	25	150A		50m∅	150A	400	650		Si△	A1gf
52	SD4	400	1.0 ∅	25A	50			100A	1.0	1 0	25A	5.0u			400				A1ev
53	SLA15AB	400	1.0	25	60	8 3m		150A	1 0	1 0	25	1.0u	10m	100	400			Si	A69
54	SLA15C	400	1.0	25	60	8.3m		150A	1 1	1 0	25	5 0u	.25m	100	400			Si	A69
55	UT235	400	1 0	25A	20	8 3m	4 0	175A	1.0	40 ∅	25A	2 0u	75u	100A	400			Si	A60
56	VE48X†	400 †	1.0	25	25	8.3m	1 0	150	1 5	1.0	25	10	10	150	400			Si△	M548
57#	BYX22-400	400	1.0	30	55	10m		150	2 4	15	25	2 0u	.12m	125	200			Si	A163
58#	DD2066	400	1 0	35A$	30			100A	1 0	1 0	25A		.02m	100A	400			Si△	DO3
59	PE504	400	1 0	35A$	60			135A	1 1	1 0	25A		25m∅	100A	400			Si	A3w
60	1N5006	400 †	1 0	40A	35 §			150A	1 3 †	1 0	40A		1 0m	40A	400			Si	DO13
61	1N5212	400 †	1 0	40A	50 §			175A	1 2	1 0	75A		20m	75A	400			Si	A31q
62	VE47†	400 †	1 0	40	25	8.3m		150	1 2	1.0	40	10	10	150A	400	900		Si△	M548
63	VE48†	400 †	1 0	40	25	8 3m		150	1.2	1.0	40	10	10	150A	400			Si△	M548
64#	BYX36/600	400	1 0	45A	30	10m		125A	1 2 †	1 0	25A	1 0u	12m	125A	400			Si△	DO7
65	1B4	400	1 0	50C$	11			150C	2 0	1.0	25	2 0u	05m	100	400			Si	M79
66	1C4∅	400	1 0	50C$	11			150C	2.0	1 0	25	2.0u	05m	100	400			Si	M116a
67	JAN1N4384	400 $	1 0	50A	50	8 3m		200A	1.2 †	3.0	25	1 0u	200u	150	400			Si	DO29
68#	1S844	400	1 0	50	50	10m			1 0	1 0	25A		1 0m	150J	400				A200
69#	1S1063	400	1 0	50A	60	10m	1 0	150A	1 0	1 5	25	10u	10m	125	400	700		Si	A52ı
70	10C4△	400 †	1 0	50A				175A	1 2 △	1.0	25A	10u						Si	A50
71	A5E2	400	1 0	50	60	8 3m		175	1.0	1 0	25	10u	50m	150	400			Si	A84
72	AA400	400	1 0	50	15		1 0	100	90	1.0	25	5.0u			400			Si	A3p
73	BTB400	400	1 0	50	50	8.0m		150A	1 1	1.0	50	10						Si	DO27
74	BTM400	400	1 0	50	30	8 0m		150A	1 1	1 0	50	10						Si	A1ry
75	CJ4	400	1 0	50	50			150	1 1	1.0	50	5.0u	200u	100	440			Si△	DO15
76	CL4	400	1 0	50A	50			150A	1.1	1 0	50A	5 0u	200u	100A	440			Si△	DO27
77	CM4	400	1.0	50	50			150	1 1	1.0	50	5 0u	200u	100	440			Si△	DO27
78	E4	400	1 0	50	75 §			175	1 1	1.0	25	2 0u	50u	100	440			Si△	DO27
79	EM4	400	1 0	50	75 §			175	1 1	1 0	25	2 0u	50u	100	440			Si△	DO41
80♦#	F14D	400	1 0	50A	45			175J	1 0	1.0	25	50u	300u	100	400			Si	A249a
81	HA400	400	1 0	50	15		1 0	175	90	1 0	25	5 0u			400			Si	DO3
82	K5E5	400	1 0	50	60			150C	2 0	1 0	25	5 0u	50m	100C	400			Si	
83#	M9257B	400	1 0	50A				150A	1.0	1 0	25A		50m	150A	400			Si	
84#	PA400	400	1 0	50A	50			175A	1 0	1.0	25A	5 0u		25A	400	750		Si△	DO29
85▼#	PCP4†	400	1.0	50	50			125S	2 0	1 0	25	10	100u	150	400			Si	M584
86	PF40†	400	1 0	50	50	8 3m		125	1.0	1.0	25	5 0u			400			Si	M544
87	TA400	400	1 0	50	15		1 0	100	90	1.0	25	5.0u			400			Si	M21
88♦	1N4246	400	1 0	55A	25	8 3m		160A	1 2	1 0	55A	1 0u	25u	125	400			Si	A1tc
89	CE504	400	1 0	55A$	50			150A	1 1	1.0	25		.10m	100	400			Si	A1cs
90	S14∅	400	1.0	55A	50	8.3m		150A	1.0	1.0	25A	10u	50u	100A	400			Si	A1sd
91	SC4	400	1 0	55$	50			175	1 2	1.0	25	1 0u	50u	125	400			Si	A1bs
92	SCA4	400	1.0	55$	50			175	1.2	1.0	25	1 0u	50m	125	400	600		Si	A1bs
93	SCE4	400	1 0	55$	50			175S	1.0	1 0	25	1 0u	50u	125	400				A1sd
94	SEN140	400	1 0	55	50	8 3m		170A	1.0	1 0	25	5 0u	300u	150	400			Si△	DO15
95#	SH4D4	400 #	1 0	55A	45	8 3m		115	60 ∅	.50	85		40m∅	85	210			Si	M215
96	1N3867	400	1.0	60A	10 §			200A	1.1	1.0	25	10n	5.0u	125	400			Si	A1ds
97#	BY126/400	400	1 0	60A	40	10		150J	1.5	5 0	25J	10u			600			Si	DO27
98▼#	S7	400	1 0	60A	250	10m		130J	950m	1.0	25A	10u			400			Si	A1tq
99#	1S1887	400	1 0	65A	60			150J	1.2	1 5	25A		400m	150J	400			Si	A1jw
100	1N3758	400	1.0	70A	30			150A	1 0	1.5	25	5 0u			400			Si	A1cm
101	1D4	400	1 0	75C	35			150C	2.0	1.0	50C	2 0u	.05m	100C	400			Si	M116*
102	1N1763A	400 †	1 0	75A	40			135	1.2	1.0	75A		50m	135	400			Si	DO1
103	1N2862A	400 †	1 0	75A	40			135	1.2	1.0	75A		50m	135	400			Si	DO1
104♦	1N4004	400	1 0	75A	30	8 3m		175A	1.6	1.0	75A	10u	30u∅	75A	400			Si	DO41
105	1N5060	400 †	1.0	75A	50 §			175A	1.2	1.0	75A		.15m	75A	400			Si	A94g
106	5A4	400	1 0	75A	50	8.3m			95	1.0	25A	10u						Si	DO27
107	10D4	400	1 0	75A	50	8 3m			95	1.0	25A	10u						Si	DO39
108	CA102HA	400	1 0	75A	15			150A	1.2	1 0	25C		3.0m∅	125C	400			Si	A32
109	CB40	400	1 0	75A	50	8.0m		175A	1 1	1.0	25A	2.0u	05m	100	400			Si△	A1bg
110	CC102HA	400	1 0	75A	15			150A	1.2	1.0	25C		3 0m∅	125C	400			Si	C8

SYMBOLS AND CODES EXPLAINED IN INTERPRETER

5. RECTIFIERS

IN ORDER OF (1) PIV, (2) MAX AVG FWD CURRENT (3) TEMPERATURE, and (4) TYPE No.

LINE No.	4 TYPE No.	1 PIV (V)	MAX AVG FWD DC CURRENT 2 Io (A)	3 at TEMP (°C)	MAX RATINGS @ 25°C SURGE CUR. PEAK 1 Cy (A)	PULSE WIDTH (s)	DISS. (W)	MAX. TEMP (°C)	MAXIMUM FORWARD VOLTAGE DROP Vf (V)	at If (A)	at TEMP (°C)	MAX. REVERSE CURRENT Ir @25°C & Vr (A)	Ir at T & Vr (A)	TEMP T (°C)	TEST VOLT Vr (V)	AVALANCHE RATINGS MAX V BKDN. (V)	MIN SLOPE (A/V)	DESCRIPTION MAT.	DWG. No.
1	CF102HA	400	1 0	75A	1 5			150A	1.2	1 0	25C		3.0mØ	125C	400			Si	F8
2	CP102HA	400	1 0	75A	15			150A	1 2	1 0	25C		3 0mØ	125C	400			Si	C9
3	ER184	400	1 0	75A	30 §			175J	1.1	1 0	25A	10u	.50mØ	75A	400			Si	DO27
4▼	GER4004	400	1 0	75	30			175	1.1	1 0	25	100u						Si	A249b
5▼	HEP157-RT	400	1 0	75$	30			175†										Si	DO41
6▼	HEP177-RT†	400	1 0	75$	32													Si	M604*
7	J4	400	1 0	75A	50	8 0m	1 0	175A	1 0	1.0	25A	5 0u	50u	100A	400			Si	DO15
8	MR2067	400	1 0	75	30	8 3m		175J	80 Ø	1 0	25	25u	.50m	75	400			Si△	A1ba
9	MR2272	400	1 0	75	30	8.3m		175J	1.1	1.0	25	10u						Si△	A1ba
10	1F4	400	1.0	100	50		1 0	150C	1.3	2 0	25	2.0u	50u	100	440			Si△	F22
11	1N1039	400	1 0	100A	30 §	4 0m		170C	1 5	1 0	25A	200u			400			Si	S65a
12	1N1045	400	1.0	100A	30 §	4 0m		170C	1.5	1 0	25A	200u			400			Si	S66b
13	1N1051	400	1 0	100A	30 §	4 0m		170C	1 5	1 0	25A	200u			400			Si	S68b
14	1N1554	400	1.0	100C				150	1.4	.60	25		1.0m	100A	400			Si	DO4
15	1N3190	400	1 0	100C	30	8 3m		175C	1 0	.75 †	25C	5.0u	50m	150C	400			Si	A31a
16	1N4384	400 †	1.0	100A	50			175A	1 3	1.0	100		.25m	150	400			Si	DO29
17	AM41	400 †	1 0	100C$	20 §	8 0m		125A	1 25	1 0	25C		30m⊘	100C	400			Si	DO4
18	G100G	400 †	1 0	100A	70			175A										Si	A50b
19	MR400	400	1 0	100A	50	8 0m		150A	1.0	1 0	25A	2 0u	100u	100	400			Si	A1dk
20	R400	400	1 0	100	50 §	8 0u		150A	1 0	1.0 †	25	2.0u△	100u	100	400			Si	
21	SI400E	400	1.0	100A	50			150C	1 0	1 0	25A	5.0u			400			Si	DO27
22	SLA400LCD†	400	1.0	100					1 0	1 0		1 0u	100u	100	400			Si	M547
23	SM514	400	1 0	100$	45			150†	1 0	1.0	25	10u			400			Si	A84
24	1N2029	400 †	1.0	150C	25	8 3m		175C	2.0	2.0	25		.50m	150C	400			Si	DO4
25	AM44	400	1.0	150C$	20 §	8 0m		175A	1 25	1.0	25C		50m	150C	400			Si	DO4
26	BY105⊘	400	1 0	150C$	25			150C	.90	1.0	25C	4 0u	50m	150C	400			Si	DO2
27	BY115	400	1.0	150C$	25			150C	80	1 0	25C	1.0u	10m	150C	400			Si	DO2
28	BY125⊘	400	1.0	150C$	25			150C	1 0	1.0	25	10u	1 0m	150C	400			Si	DO2
29	E1G3	400	1 0	150	200			175	1 3	1.0	150	10u	1 0m	150	400			Si	DO4
30#	PH204	400	1.0	150C	25			150C	1 0	1 0	25	10u	1.0m	150C	656			Si	DO2
31#	SD94S	400	1 1	40A	40	10m		170A	1 0	1 6	7A	50u	200m	150A	200			Si△	DO3
32	HC70F	400	1 1	50A	50	8 0m		175A	1 2	1 1	25	10u			400			Si	F29
33	MH70	400	1 1	50	50	8 3m		175	1.2		25	10u						Si	A3h
34	1N4089	400	1 1	85A	75			150S	1.2	1 1	85		20m	85	400			Si	A3t
35	HC700	400	1 1	100A	30			150A	1 0	1 1	100A	2 0u	05mØ	100	400			Si△	A3c
36	A6E1	400	1 2	25	60			175A	50		150	1.0u	50m	150	400			Si	A84a
37	A6E5	400	1.2	25	60			175A	50		150	5 0u	50m	150	400			Si	A84a
38	A6E9	400	1.2	25	60			175A	50		150	10u	50m	150	400	100	200u	Si	A84a
39	B6E1	400	1 2	25	60			175A	.50		150A	1.0u	.50m	150	400			Si	A1rx
40	B6E5	400	1.2	25	60			175A	50		150A	5 0u	50m	150	400			Si	A1rx
41	B6E9	400	1 2	25	60			175A	50		150A	10u	.50m	150	400	100	200u	Si	A1rx
42#	DD2326	400 †	1 2	25A	45			150A	1.0	1 0	25	1.0u	20m	150A	400			Si△	A31k
43	K6E5	400	1.2	50	60			150C	2.0	1 2	25	5 0u	50m	100C	400			Si	
44#	F41Z	400	1 25	25A	30	10m		150A	1 2	1 3 †	25A		1 0m	150A	400			Si△	DO13
45	TM42	400	1.25	25C				125C	2.0	80	25		30m⊘	100C	400			Si	S145
46	UT244	400	1 25	25A	20	8 3m	4 0	175A	1 0	.50 ⊘	25A	2 0u	75u	100A	400			Si	A60
47#	DS1 2-04A	400	1.3		60	10m		150	1 20	4.0		5 0u	1 0m	150					
48#	F41	400	1 3	25A	70	10m		150A†	1.2	1.3 †	25		20m	125A	400			Si△	DO13
49	RA132HA	400	1.3	55A$	60			150A	1.2	1 3	25		30mØ	150	400			Si	A34
50#	SKE1/02	400 %	1.4	45A	50 §	70m	1 2	160	1 3	3 1 ⊘	25		100uØ	130	125			Si	C42s
51#	BY174	400 $	1.4	50A	40	10m		150A	1.2	1 0	25	1 0u		25	400			Si△	DO27
52	1N1911	400 Ø	1.5	25A	30	16m	2 0	250	1.0	1.0	25	10u			400			Si△	A86
53	1N2293	400	1.5	25	100			150	.60	1 5	25		50m	150	400			Si△	S35
54	1N2293A	400	1 5	25$	20			150	60	1.5	25		100u	150	400			Si△	DO4
55	1N2647	400	1.5	25A	15	8 3m		165A	1.3	1 5	25A	300u			400			Si	M124
56#	1S023	400	1 5	25A	125			150A	1.25	5 0	25A		.05m	100C	400			Si△	A89
57#	1S154	400	1 5	25A	15			125	1 3 △	1 0		5 0u△			400			Si*	S42
58	150R4B	400	1 5	25	60			175	2 0	1 5	25	5.0u	50m	100	400			Si	
59	A7E1	400	1 5	25	60			175A	50		150	1 0u	.50m	150	400			Si	A84a
60	A7E5	400	1 5	25	60			175A	50		150	5 0u	.50m	150	400			Si	A84a
61	A7E9	400	1 5	25	60			175A	50		150	10u	50m	150	400	100	200u	Si	A84a
62	A121-4†	400	1 50	25	25	8 0m		150	1 10	1 0	25	5 0u			440			Si△	M531
63	A132-4†	400	1 50	25	50	8 0m		150	1.10	1.0	25	5 0u			440			Si△	M532
64	A168-4†	400	1 5	25	50	8 0m		125	1 1	1 0	25	5.0u			480			Si	M575
65	B7E1	400	1.5	25	60			175A	50		150A	1.0u	.50m	150	400			Si	A1rx
66	B7E5	400	1 5	25	60			175A	50		150A	5 0u	50m	150	400			Si	A1rx
67	B7E9	400	1 5	25	60			175A	50		150	10u	50m	150	400	100	200u	Si	A1rx
68	BR84D†	400	1 50	25	50	8 0m		150	1 10	1 0	25	5 0u			440			Si△	M536
69	CODI5344	400	1 5	25$	35			150	1 1	80	25	1 0u			400			Si	M45
70#	DA006	400	1.5	25	40	10m	60	100	1 0	1 0	25	1.0u			400	750		Si△	A3k
71	M1E1	400	1.5	25	250			175A	50		150	2 0u	5.0m	150	400			Si	A1ep
72	M1E5	400	1.5	25	250			175A	50		150	10u	5 0m	150	400			Si	A1ep
73	M1E9	400	1.5	25	250			175A	50		150	10u	5 0m	150	400	100	200u	Si	A1ep
74	MB239	400	1.5	25	25	8 3m	2 0	175A	1 0	80 ⊘	25	200n	15u	100	400			Si	A60f
75#	SA4M1	400	1.5	25A	47		2 0	150A	2 0	10	25J	10u	300u	150J	400	500 Ø		Si△	DO27
76	SI4	400	1.5	25A	80			150C	1.0	1 5	25A	1 0u			400			Si	A1bc
77	UT254	400	1.5	25A	25	8 3m		175A	1 0	75 ⊘	25A	2 0u	75u	100A	400			Si	A60
78#	ZR14	400	1 5	25A	80	10m		150A	1.0	1 5	25A	5 0u	.20m	100A	400			Si	A6a
79#	ZR14T	400	1 5	25A	80	10m		150A	1 0	1 5	25A	5 0u	20m	100A	400			Si	S164
80#	ZS274	400	1.5	25A	70 §			150A	1.2	1 5	25A	5 0u	150u	100A	400			Si	A52f
81	SCBR4	400	1.5	30C	20			150										Si	M45a*
82#	SL403M	400	1.5	30A	30	2 0m		125C	1 34	7 5	25A	5 0u	110u	100C	400			Si△	S33
83	1N4820	400 †	1 5	40	50			170	1.3	1 5	40		25m	40	400			Si	DO27
84#	1S922⊘	400	1.5	40A	80	10m		150J	1 05 △	1.5	25A		.40m	150J	400			Si△	A56
85#	S2A40	400	1.5	40A	80	10m		150J	1 05 △	1 5	25A		.40m	25A	400			Si△	A56
86#	S5CN1	400	1.5	40A	45		1 7	150A				10u	.25m	150J	400			Si△	A31n
87#	S5M1	400	1 5	40A	47		2 0	170A				10u	300u	150	400			Si△	DO27
88#	1S1073	400	1.5	50A	60	10m	1 0	150A	1 0	1 5	25	10u	10m	125	400	700		Si	A52j
89	1.5E4	400	1.5	50A	75 §			175A	1.1	1.5	25A	2.0u	50u	100	440			Si△	DO27
90	1 5J4	400	1.5	50	75 §			175	1 1	1 5	25A	2 0u	50u	100	440			Si△	DO15
91	DRS104	400	1.5	50A	50 §	8 3m		125A	1 0	1.0	25A	10u	200u	125A	400			Si	A168c
92	K7E5	400	1.5	50	60			150C	2 0	1 5	25	5 0u	50m	100	400			Si	
93	P100G	400	1.5	50	50	8 0m	1 0	170	1 0	1 0	25	5 0u						Si	DO27
94	P150G	400	1.5	50	50	8 3m	1 0	150	1 0	1.0	25	5 0u							DO27
95#	SE1 5A	400	1 5	50	63	20m	1 6k	120	1 1	1.5	50				400			Si	M99a
96	1N1566	400	1 5	55A	70	8 3m		175A	1 2	50	25A	5 0u	.50m	100	400			Si△	C12
97	1N2394	400	1.5	55A	35			150A	1 2	1 5	25		30mØ	150A	400			Si	A32
98	1N2403	400	1 5	55A	35			150A	1 2	1 5	25		30mØ	150A	400			Si	C8
99	1N2412	400	1 5	55A	35			150A	1.2	1 5	25		30mØ	150A	400			Si	C9
100	1N2421	400	1 5	55A	35			150A	1.2	1.5	25		30mØ	150A	400			Si	F8
101▼#	1S1851	400	1.5	60A	50	10m		120J	950m	750m	25A	10u			400			Si	M594c⊘
102▼#	SA2	400	1.5	60A	100	10m		140J	930m	1.5	25A	10u			400			Si	A268
103	1N5395	400	1.5	70C	50 §			170C	1.4	1.5	70C		30m	150	400			Si	DO15
104#	DD2026	400	1.5	70A$	45	10m		150A	1 0	1.0	25A		20m	150A	400			Si	DO3
105	1N2850	400 †	1 5	75C	15			165A	65 Ø	.50	150C		.30mØ	150C	400			Si*	S35
106▼	CTN400	400	1.5	75	50			175A	1.0			10u			400			Si	M594*
107▼	CTP400	400	1.5	75	50			175A	1 0			10u			400			Si	M594a*
108▼	VB400	400	1.5	75	50			175A	1.0			10u			400			Si	M594b*
109	1N1118	400 †	1.5	85C	15			170A	65 Ø	1 5	150		.30mØ	150	400			Si	DO4
110	1N1057	400	1.5	100A	60 §	4.0m		150A	1 5	1.5	25A	1 0m			400			Si	A167v

SYMBOLS AND CODES EXPLAINED IN INTERPRETER

5. RECTIFIERS

IN ORDER OF (1) PIV, (2) MAX AVG FWD CURRENT (3) TEMPERATURE, and (4) TYPE No.

LINE No	4 TYPE No.	1 PIV (V)	MAX AVG FWD DC CURRENT 2 Io (A)	3 at TEMP (°C)	MAX RATINGS @ 25°C SURGE CUR. PEAK 1 Cy (A)	PULSE WIDTH (s)	DISS. (W)	MAX. TEMP (°C)	MAXIMUM FORWARD VOLTAGE DROP Vf (V)	at If (A)	at TEMP (°C)	MAX. REVERSE CURRENT Ir @25°C & Vr (A)	Ir at T & Vr (A)	TEMP T (°C)	TEST VOLT Vr (V)	AVALANCHE RATINGS MAX V BKDN. (V)	MIN SLOPE (A/V)	MAT.	DESCRIPTION DWG. No.
1	1N1088	400	1.5	100A	60 §	4 0m		150A	1.5	1.5	25A	2 0m			400			Si	F22h
2	1N1453	400	1.5	100C$				190J	1.0	2 4	150C		5.0m	25C	400			Si	S41a
3	1N1620	400	1.5	100A$	100	4 0m		100A	1.2	1.5	25		5.0m	25	400			Si	A52
4#	1WS4	400	1.5	100C	25 §	10m		125J	1.5	5 0	100C		1.5m	125J	400			Si*	A19a
5	40F1	400	1.5	100				175J	1.0	2 4	25C		10m	25C	400			Si	S41a
6	1N1449	400	1.5	120C				175J	1.3	1.8	25A		2.0m	25C	400			Si	S41b
7	1N1232B	400	1.6	50$	30				1 2	1.0	25	10u	300u	150	400			Si	S25a
8	S1240	400	1.6	120C	35		15 ØØ	175J	1.0 Ø	1 0	25A		.10mØ	100C	400	1 8k		Si△	DO13△
9	1N1222	400	1 6	135C	20			175J	1.5	2 5	25J	500u	1.5m	150J	400			Si	DO1
10	1N1232	400	1 6	135C	20			175J	1 5	2 5	25J	500u	1 5m	150J	400			Si	S25
11	1N1222B	400 †	1 6	140C	25			175$	1 7	1 4	25	300uØ	10m△	25	400			Si	DO1
12	1N1232A	400	1 6	140C	20			175J	1.5	2 5	25J	50u	50m	150J	400			Si	S25
13	1N1542	400	1 6	140C	20			175J	1.5	2.5	25J	50u	.50m	150J	400			Si	DO4
14	1N1222A	400	1 6	175J$	20			175J	1 5	2 5	25J	50u	.50m	150J	400			Si	DO1
15	MDA922-6†	400 †	1 8	55A	100			175J	1.1	750m	25J	20u			400			Si△	M535a
16#	10B4	400	1 8	125B	40	10m		175A	1 1	3 0	25A	50u	.50m	150A	400			Si△	DO1
17	NS2004	400	2 0		200	8 3m			1.2	2.0		25u			400				
18	1N3612	400 §	2.0	25A	20		4.0	200A	1 0	75	25A	10u	.30m	150A	400			Si	A60
19	1N3939	400	2.0	25A	60	1 0m	1 8	175A	1.1	6 0	25A	5.0u△	.50m	150A	400	750	15u△	Si△	DO13
20	200R4B	400	2 0	25	60			175	2 0	2 0	25	5.0u	.50m	100	400			Si	
21	AB400	400	2.0	25	15		3 0	100	1.25	1 0	25	5 0u			400			Si	A3g
22	BR74A†	400	2.00	25	25	8 0m		150	1.20	1 0	25	5.0u			440			Si△	M534
23#	F42	400	2.0	25A	70	10m	3 0	150A†	1.2	2 0 †	25		.20m	125A	400			Si△	DO13
24#	F42Z	400	2 0	25A	70	10m		150A	1.2	2 0 †	25A		1 0m	150A	400			Si△	DO13
25	GR20	400	2 0	25	20			125	1.1	1.0	25	10u	30m	150	400			Si	A1ry
26	M2E1	400	2 0	25	250			175A	.50		150	2 0u	5.0m	150	400			Si	A1ep
27	M2E5	400	2 0	25	250			175A	.50		150	10u	5 0m	150	400			Si	A1ep
28	M2E9	400	2 0	25	250			175A	50		150	10u	5 0m	150	400	100	200u	Si	A1ep
29	MB231	400	2 0	25	25	8 3m	2.0	175A	1.0	1 0 Ø	25	25n	5.0u	100	400			Si	A60f
30	SEN2A4†	400	2.0	25	30	8 3m		150A	1 2	1 0		10u	100u	100	200			Si	M79b
31	SEN240	400	2.0	25	150	8 3m		170A	1 2	2 0	50		25u	50	400			Si△	DO27
32	SLA25A	400	2 0	25	80	8 3m		150A	95	2 0	25	1 0u	10m	100	400			Si	A69
33	SLA25B	400	2.0	25	80	8 3m		150A	1.0	2 0	25	1 0u	.10m	100	400			Si	A69
34	SLA25C	400	2 0	25	80	8 3m		150A	1 0	2.0	25	5 0u	.25m	100	400			Si	A69
35	UT264	400	2 0	25A	30	8 3m		175A	1 0	90 Ø	25A	2 0u	75u	100A	400			Si	A60
36	UT2040	400	2 0	25A	60	8 3m		175A	1 0	1 Ø	25A	5 0u	.10m	100A	400			Si	A146m
37	VS448X†	400 †	2 0	25	35	8 3m		150	1.5	2 0	25	10	10	150	400			Si△	M532a
38#	SR3AM8	400	2.0	40A	150 §	8 3m		150J	1 1	10	25A	100u	1.0m	150J	400			Si△	A1fn
39	VS447†	400 †	2.0	40	8.0	8 3m		150	1.2	2 0	25	10	10	150	400	900		Si△	M532a
40	VS448†	400 †	2 0	40	8 0	8 3m		150	1 2	2.0	25	10	10	150	400			Si△	M532a
41	1N5174	400	2 0	50A	200			175A	1.2 †	2.0	50A		25u	50A	400			Si	DO27
42	20A4	400	2 0	50	50			170A	1.3	2 0	50	10u	.25m	50	400			Si	DO27
43	A1423DC1AB1	400	2 0	50A				150A	900m	100m	25A	5.0u	100u	150A	400			Si	M205h
44	B172-40	400	2 0	50	60			150C	2.0	2 0	25	5.0u	.50m	100	400			Si	
45	BFW400†	400	2 0	50A	50			100C	1.1	1 0	25A								M40a
46▼	FW400†	400	2.0	50A	50			125A	900m	1 0	25A	5 0u						Si	M40a
47	K8E5	400	2 0	50	60			150C	2 0	2.0	25	5.0u	.50m	100	400			Si	
48▼#	MCP4†	400	2 0	50	50			125S				10u	100u	125	400			Si	S349
49	PD40	400	2.0	50A	50			125A	.90	1 0	25A	5.0u						Si	M40a*
50	Si4A	400	2 0	50A	80			150C	1 0	3 0	25A	1 0u			400			Si	A1bc
51	BH4R4†	400	2 0	55	45	8 3m		115	1 2 Ø	1 0	85		800uØ	85	280			Si	M151
52	2F4△	400	2 0	75C	50			150C	1 3	2 0	25C	2.0u	50u	100C	440			Si△	F22
53	HB400	400	2 0	75A	200			175C	1 0	2 0	25A	5 0u			400			Si	A179b
54	1N1088A	400	2 0	100A	100	4 0m		100A				25n			400			Si	F42
55	FB400†	400	2 0	100	50 §	8 0m		150A	1 0	1 0	25	10u†						Si△	M79a
56#	1S1354	400	2 0	124C	40	8 3m		150J	1.2	3 0	25A	10uØ	.50mØ	150J	400			Si△	S48c
57#	SR2B8	400	2 0	124C	60			150J	1 2 †§	3.0	25C	10u	500u	150J	400				S157a
58#	DS2-04A	400	2 2		120	10m		150	1 2	3 0		5.0u	1.0m	150					
59	250R4B	400	2 5	25	250			175	2 0	2.5	25	10u	1 0m	100	400			Si	
60	M3E1	400	2 5	25	250			175A	.50		150	2 0u	5.0m	150	400			Si	A1ep
61	M3E5	400	2 5	25	250			175A	.50		150	10u	5 0m	150	400			Si	A1ep
62	M3E9	400	2 5	25	250			175A	.50		150	10u	5 0m	150	400	100	200u	Si	A1ep
63#	DD3076	400	2 5	30A$	45			100A	1 0	2 5	25A		.05m	100A	400			Si△	S191
64#	SL403F	400	2 5	30A	30	2 0m		150C	1 05	7 5	25A	5.0u	110u	100C	400			Si△	DO1
65♦#	SKN2.5/04	400	2 5	45A	120 §	10m		190A	1 0 §	2 5	25J	50u			280			Si	S352b
66#	DD3026	400	2 5	65A$	45			150A	1.0	1 0	25A		40m	150A	400			Si△	S164a
67#	SJ403F	400 †	2.5	100A	30			150A	1 0	.75	25A	10u	.30m	150A	400			Si△	DO3
68#	BYX38/600	400	2 5	125B	38 §	10m		150J	1 7	5 0	25J	10u	20m	125J	400			Si△	DO4Ø
69#	BYX38/600R	400	2 5	125B	38 §	10		150J	1 7	5.0	25J	10u	200u	125J	400			Si△	DO4
70#	OA210	400 †	2 5	125B	40	8 3m		150J	1 5	5 0			120u	125J	400			Si	A6f
71	1N2528	400	2 5	150C$	50			150C	1.2	4.0	25C	4 0u	50m	150C	400			Si△	DO10
72	1N2539	400	2 5	150C$	50			150C	1 0	4 0	25C	1 0u	.10m	150C	400			Si△	DO10
73	1N2550	400	2 5	150C$	50			150C	1 5	4 0	25C	10u	1.0m	150C	400			Si△	DO10
74	BAV205	400	2 5	150C$	50			150C	1 2	2 5	25C	4.0u	500u	150C	400	520		Si	DO4
75	BAV215	400	2 5	150C$	50			150C	1 0	2.5	25C	1 0u	10m	150C	400	520		Si	DO4
76	BAV225	400	2 5	150C$	50			150C	1 5	2 5	25C	10u	1 0m	150C	400	520		Si	DO4
77	BAV305	400	2 5	150C$	50			150C	1 2	2 5	25C	4.0u	.50m	150C	400	520		Si	S35
78	BAV315	400	2 5	150C$	50			150C	1 0	2.5	25C	1.0u	.10m	150C	400	520		Si	S35
79	BAV325	400	2 5	150C$	50			150C	1 5	2 5	25C	10u	1.0m	150C	400	520		Si	S35
80	BY205	400	2 5	150C$	50			150C	1.2	2.5	25C	4 0u	50m	150C	400			Si△	DO4
81	BY215	400	2 5	150C$	50			150C	1 0	2.5	25C	1.0u	10m	150C	400			Si△	DO4
82	BY225	400	2 5	150C$	50			150C	1 5	2 5	25C	10u	1 0m	150C	400			Si△	DO4
83	BY305	400	2 5	150C$	50			150C	1.2	2.5	25C	4 0u	50m	150C	400			Si	S35
84	BY315	400	2 5	150C$	50			150C	1 0	2 5	25C	1 0u	10m	150C	400			Si	S35
85	BY325	400	2 5	150C$	50			150C	1 5	2 5	25C	10u	1 0m	150C	400			Si	S35
86	MA40	400	2 5	150B	30			190B	1 0 △	2.5	150B	15u△						Si△	DO4
87	TM41	400	2 7	25C				125C	2 0	2.0	25		30mØ	100	400			Si	S145
88	NS3004	400	3 0		300	8 3m			1 2	3 0		25u			400				
89	1N2711	400	3 0	25A	15	8 3m		165A	1 3	3.0	25A	200u			400			Si	M125
90	1N2734	400	3 0	25A	15	8 3m		165A	1 3	3.0	25A	300u			400			Si	M126a
91	1N2759	400	3 0	25A	15	8.3m		165A	1 3	3.0	25A	300u			400			Si	M126a
92	1N3982	400	3 0	25A	30		4 0	200A	1 0	90	25A	10u	10m	100	400			Si	A60
93	300R4B	400	3 0	25	250			175	2 0	3 0	25	10u	1 0m	100	400			Si	
94	AC400	400	3 0	25A	50			150C	1 0	3 0	25A	5 0u			400			Si	A1ey
95	BR84A†	400	3 0	25	50	8 0m		150	1 2	1.5	25	5 0u			440			Si△	M534
96▼	HEPR0084-RT	400	3 0	25$	300			175†										Si	M603
97▼	HEPR0094-RT	400	3 0	25$	300			175†										Si	A179
98	M4E1	400	3 0	25	250			175A	50		150	2 0u	5 0m	150	400			Si	A1ep
99	M4E5	400	3.0	25	250			175A	50		150	10u	5.0m	150	400			Si	A1ep
100	M4E9	400	3 0	25	250			175A	50		150	10u	5 0m	150	400	100	200u	Si	A1ep
101	UT3040	400	3 0	25A	80	8 3m		175A	1 0	2.0 Ø		5 0u	100u	100A	400			Si	A146m
102	3BR4†	400	3 00	30	20	8 0m		125C											M530
103	1N5000	400 †	3 0	40A	300 §			175A	1.0 †	3 0	75A		2.0m	175A	400			Si	M176a
104	1N1126	400	3 0	50A	25 §			150A	1 1	1 0	25A		30mØ	150A	400			Si△	DO4
105	1N4142	400	3 0	50A	300			175A	1 0	3 0	50A		10m	50A	400			Si	A1en
106#	3GC12	400	3 0	50A	90			150J	1 2	3 0	25A		1.0	150J	400			Si	S19s
107	A138-4†	400	3 0	50	50	8 0m		150	1 1	3 0	25	5 0u			420			Si	M79c
108	CH302HA	400	3 0	50A	15			150A	1 2	1.0	25C		3 0mØ	125C	400			Si	S152a
109	CK302HA	400	3 0	50A	15			150A	1 2	1 0	25C		3 0mØ	125C	400			Si	S153
110	CS302HA	400	3 0	50A	15			150A	1 2	1 0	25C		3 0mØ	125C	400			Si	S152

SYMBOLS AND CODES EXPLAINED IN INTERPRETER

5. RECTIFIERS

IN ORDER OF (1) PIV, (2) MAX AVG FWD CURRENT (3) TEMPERATURE, and (4) TYPE No.

LINE No	4 TYPE No.	1 PIV (V)	MAX AVG FWD DC CURRENT 2 Io (A)	3 at TEMP (°C)	MAX RATINGS @ 25°C SURGE CUR. PEAK 1 Cy (A)	PULSE WIDTH (s)	DISS. (W)	MAX. TEMP (°C)	MAXIMUM FORWARD VOLTAGE DROP Vf (V)	at If (A)	at TEMP (°C)	MAX. REVERSE CURRENT Ir @25°C & Vr (A)	Ir at T & Vr (A)	TEMP T (°C)	TEST VOLT Vr (V)	AVALANCHE RATINGS MAX V BKDN. (V)	MIN SLOPE (A/V)	MAT.	DESCRIPTION DWG. No.
1	HAB040	400	3 0	50	300	8 3m		150A	1.1	3 0	25	5 0u	150u	100	400			Si	A1ez
2	S3A4	400	3.0	50A	300			150C	1 0	3 0	25A	1 0u			400			Si	A1ez
3#	S8-04	400	3 0	50	200	10m		150	1 1	8 0	25	50u			400			Si	S19m
4	S400⊘	400	3 0	50	25		10	175	1 0	1 0	25	5 0u				400		Si	DO4
5	1N5200	400	3 0	55A	300 §	8 3m		175A	1.0	3 0	55A		7 6m△	175A	400			Si	A1rv
6	JAN1N5200	400	3 0	55A	300			175A	1.0	3 0	25	5 0u	.12m	100	400			Si	A1et
7	3S4E	400	3 0	55$	250			150A	.95 △	3 0	100A	10u	100u	100	400			Si	A1rv
8	SLA5200	400	3 0	55	300			175	1 0	3 0	25	5 0u	12m	100	400			SL	A31a
9	1N4722	400	3 0	75A	300			175A	1.0	3 0	75		2 0m	175	400			Si	A179a⊘
10	HC400	400	3 0	75	300		3 0	175	1 0	1 0	25		1 0m	25	400			Si	A179
11	MR2073	400	3 0	75	300	8 3m		175J	.50 ⊘	3 0	75	1 0m	3 0m	75	400			Si△	A179a
12	MR2373	400	3 0	75	300	8 3m		175J	1 0	3 0	25	1 0m	3 0m	75	400			Si△	M173
13	S54△	400	3 0	80$	20				1 3	5 0	25	100u			400			Si	S48
14	S4BR2	400 %	3 0	95B	53	35m		130B	55 ⊘	1 5	25		2 0m	125	400			Si	S81
15	3E4	400	3 0	100	200	8 0m	3 0	175	1 2	3 0	100	10u	100u	50	440			Si△	A1ec
16#	FD43	400	3 0	100C	70	10m		150C	1 4	10	25C		300u	125C	400			Si△	DO13
17	HR400	400	3 0	100	300 §	8 0u		150A	1 0	3 0 †	25	5 0u△	250u	100	400			Si	A1sm
18	1N5404	400	3 0	105C	200 §			170C	1 2	3 0	105C		50m	150C	400			Si	A3g
19	SEN340	400	3 0	105C	200	8 3m		170A	1 2	3 0	25	5 0u	500u	150	400			Si△	DO27
20#	1S413	400	3 0	125S	33			150S	1 6	10	25S	5 0u	300u	150	400			Si	S61△
21#	1S434	400	3 0	125B				150	1 6		25	5 0u			400			Si△	A89
22	30S4	400	3 0	125	150 §			175J	1 0 †	3 0	25	5 0u	300u	125	400			Si	A1ed
23#	D4003	400	3 0	125B$	35			125B	1.5	3 0	25		30m	125B	400			Si△	S4c
24	S413	400	3 0	125A				150A	1 6	10	25A	5 0u	30m	150	400			Si△	S24c⊘
25#	3F40	400	3 0	140B	40	10m		175A	1 0	1 0	25A	50u	.50m	150A	400			Si	DO4
26	1N1585	400	3 0	150C				175B	1 5	6 0	25C		50m⊘	150	400			Si	DO4
27	E2G3	400	3 0	150	200			175	1 3	3.0	150	10u	1 0m	150	400			Si	DO4
28#	S4M3	400 %	3 0	150J	180			150J	1 2	3 0			500u		400			Si△	A52d
29	1N1578	400	3 5	25C$	70			150C	1 2	3 5	25A	5 0u	50m	125A	400			Si△	S175
30	350R4B	400	3.5	25	250			175	2 0	3 5	25	10u	1 0m	100	400			Si	
31	1N3572	400	3 5	85B	35			165A	50 ⊘	2 5	150A		40m	150A	400			Si	DO4
32	1N2681	400	3 6	25A	15	8 3m		165A	1 3	3 6	25A	300u			400			Si	M126a
33	1N2746	400	3 6	25A	15	8 3m		165A	1 3	3 6	25A	300u			400			Si	M126c
34	400R4B	400	4 0	25	250			175	2 0	4 0	25	10u	1 0m	100	400			Si	
35#	G4004	400	4 0	25A	100	10m	4 5	150A	1 2	4 †	25		3 0m	125C	400			Si△	DO4
36#	P4004	400	4 0	25A	100	10m	4 5	150A	1 2	4 †	25		3 0m	125C	400			Si△	S95a
37#	SJ404F	400 †	4 0	25A	15			200A	1 0	75	25A	10u	1 5m	200A	400			Si△	DO3
38	1N2515	400	4 0	30A	30			165	1 1	1 5	25	2 0u			400			Si△	DO4△
39	1N2521	400	4 0	30C	25			150C				2 0u	30m	150C	400			Si△	DO4
40	4F4	400	4.0	75	300	8 0m	3 0	175B	1 3	4 0	25	100u	500u	100	440			Si△	F22
41	450R4B	400	4 5	25	250			175	2 0	4 5	25	10u	1 0m	100	400			Si	
42	MR40#	400	4 5	150B	70			185B	1 0	4 5	150B	20u△						Si△	DO4
43	1N1615	400	5 0					175A	1 5	10	25A							Si	DO4
44	1N2234	400	5 0	25$	20			150	.60	1 5	25		500u	150	400			Si△	DO4
45	1N2234A	400	5 0	25$	100			150	60	5 0	25		350u	150	400			Si△	DO4
46	1N2235	400	5 0	25$	20			150	60	1 5	25		500u	150	400			Si△	S35
47	1N2235A	400	5 0	25$	100			150	60	5 0	25		350u	150	400			Si△	S35
48	500R4B	400	5 0	25	250			175	2 0	5 0	25	10u	1 0m	100	400			Si	
49	5BR4†	400	5 00	30	35	8 0m		125C											M530
50#	SKN5/04	400	5 0	45A	160	10m		190A	1 0	10	150								S352b
51▼#	5PM4†	400	5 0	50	125			150J	2 0	5 0			50u	150	400			Si	M585
52	S5A4	400	5 0	50A	300			150C	1 1	5 0	25A	1 0u			400			Si	A1ez
53#	S20-04	400	5 0	50	600	10m		150	1 1	60	25	50u		25	400			Si	S19p
54	1N1063	400	5 0	100A	60 §	4 0m		170C	1 5	5 0	25A	1 0m			400			Si	S67a
55	1N1069	400	5 0	100A	60 §	4 0m		170C	1 5	5 0	25A	1 0m			400			Si	S66c
56	1N1075	400	5 0	100A	60 §	4 0m		170C	1 5	5 0	25A	1 0m			400			Si	S68c
57	1N1092	400	5 0	100A	60 §	4 0m		170C	1 5	5 0	25A	2 0m			400			Si	F22h
58	1N1092A	400	5 0	100A					1 5	5 0	100A		5 0m	100A	400			Si	F73
59	40F5	400	5 0	100				175J	1 1	13	25C		10m	25A	400			Si	S41a
60	VRE400X	400	5 0	100	75	8 3m		150	1 5	10	25	2 0	5 0	150	400			Si△	M249*
61	VRF400X	400	5 0	100	75	8.3m		150	1 5	10	25	2 0	5 0	150	400			Si△	M249*
62	VRG400X	400	5 0	100	75	8 3m		150	1 5	10	25	2 0	5 0	150	400			Si△	M249*
63#	DS6-04A	400	5 0	132	180	10m		150	1 35	15		5 0u	2.0m	150					
64	366H	400 †	5 0	145C	100			180J	1 1	5 0	25C		10m	180	400			Si	S27
65	1N1615A	400	5 0	150C	150			190J	1 1	6 0	25		50m	150	400			Si△	DO4△
66	407H	400	5 0	150C	125	8 3m		175J	1 1	5 0	25C		2 0m⊘	175J	400			Si	DO4
67	E3G3	400	5 0	150	200			175	1 3	5 0	150	10u	1 0m	150	400			Si	DO4
68	F1G3	400	5 0	150C	200			175J	1 3	30	25C		1 0m	150C	400			Si	DO5
69	550R4B	400	5 5	25	250			175	2 0	5 5	25	10u	1 0m	100	400			Si	
70	NS6004	400	6 0		300	8 3m			1 2	6 0		25u			400				
71	6A400	400	6 0	25	300	8 0m		175	1 2	6 0	25	25u						Si	S19f
72	600R4B	400	6 0	25	250			175	2 0	6 0	25	10u	1 0m	100	400			Si	
73	BR94A†	400	6 0	25	150	8 0m		150	1 2	3 0	25	10u			440			Si△	M537
74#	DD4026	400	6 0	25	50	10m	7 2	150	1 1	6 0	25	5 0u		25	400			Si	S19
75#	DD4066	400	6 0	25	50	10m	7 2	100	1 1	6 0	25	5 0u		25	400			Si	S19
76#	G4006	400	6 0	25A	140	10m	8 0	150A	1 2	6 †	25		3 0m	125C	400			Si△	DO4
77#	P4006	400	6 0	25A	140	10m	8 0	150A	1 2	6 †	25		3 0m	125C	400			Si△	S95a
78	SLA400†	400	6 0	25				150A				1 0u	75u	100	400				M545
79#	6GC12	400	6 0	50A	200			150J	1 2	6 0	25A		1 3	150J	400			Si	S19s
80#	44R2	400	6 0	75A	75 §	10m		150C	1 2	6 0	25C		2 5m	150C	400			Si△	DO4⊘
81	VH447†	400 †	6 0	80	25	8 3m		150	1 2	6 0	25	10	10	150A	400	900		Si△	M532a
82	VH448†	400 †	6 0	80	25	8 3m		150	1 2	6 0	25	10	10	150	400			Si△	M532a
83#	6F40	400	6 0	100A	120 §	10m		190J	65	6 0	100B		2 5m	100B	400			Si△	DO4⊘
84#	BYX50-400	400	6 0	110B	80 §	10m		150J	1 95	20	25J		1 4m	125J	400			Si	DO4⊘
85#	S4AN6	400 %	6 0	125B	125		6 5	150J	470m⊘	6 0 †			2 0m	125B				Si△	DO4⊘
86#	S6-403K	400	6 0	125C	130	10m		150J	1 5	32	25A	20u	500u	150C	400			Si△	DO4⊘
87	1N1346	400	6 0	150C	66		9 5	190J	1 2	10	25J		10m	25	400			Si	S26
88	1N1346A	400 †	6 0	150B$	150			200J	64 ⊘	6 0	150B		1 5m⊘	150B	400			Si*	DO4
89	1N1346B	400	6 0	150C	150			190J	1 1	6 0			02m	25C	400			Si△	DO4△
90	1N2151	400	6 0	150C$	150			150	1 2	10	25	4 0u	50m	150A	400			Si	DO10
91	1N2151A	400	6 0	150C$	150			150	1 0	10	25	1 0u	10m	150	400			Si	DO10
92	1N2495	400	6 0	150C				190J	1 1	6 0	25		2.0m⊘	150C	400			Si	DO4
93	1N2569	400	6 0	150C$	150			150C	1 5	10	25C	10u	1 0m	150C	400			Si△	DO10
94	BAV405	400	6 0	150C$	150			150C	1 2	6 0	25C	4 0u	50m	150C	400	520		Si	S35
95	BAV415	400	6 0	150C$	150			150C	1 0	6 0	25C	1 0u	10m	150C	400	520		Si	S35
96	BAV425	400	6 0	150C$	150			150C	1 5	6 0	25C	10u	1 0m	150C	400	520		Si	S35
97	BAV705	400	6 0	150C$	150			150C	1 2	6 0	25C	4 0u	50m	150C	400	520		Si	DO4
98	BAV715	400	6 0	150C$	150			150C	1 0	6.0	25C	1 0u	10m	150C	400	520		Si	DO4
99	BAV725	400	6 0	150C$	150			150C	1 5	6 0	25C	10u	1 0m	150C	400	520		Si	DO4
100	BY405	400	6 0	150C$	150			150C	1 2	6 0	25C	4 0u	50m	150C	400			Si	S35
101	BY415	400	6 0	150C$	150			150C	1 0	6 0	25C	1 0u	10m	150C	400			Si	S35
102	BY425	400	6 0	150C$	150			150C	1 5	6 0	25C	10u	1 0m	150C	400			Si	S35
103	BY705	400	6 0	150C$	150			150C	1 2	6 0	25C	4 0u	50m	150C	400			Si△	DO4
104	BY715	400	6.0	150C$	150			150C	1 0	6 0	25C	1 0u	10m	150C	400			Si△	DO4
105	BY725	400	6 0	150C$	150			150C	1 5	6 0	25C	10u	1 0m	150C	400			Si△	DO4
106	E4G3	400	6.0	150	200			175	1 3	6 0	150	10u	1 0m	150	400			Si	DO4
107	KR602HA	400	6 0	150S$	75			175S	1 2	6 0	150S		1 0m	150S	400			Si	DO10
108	1N1615R	400	7 0	150B	150			190A	700m	1 0	190J	10u	1 0m	190J	400			Si	DO4
109	1N2698	400	7 2	25A	15	8 3m		165A	1 3	7 2	25A	300u			400			Si	M126e
110	UT5140	400	7 5	100C	150	8 3m		175A	1 0	5 0	25	10u	30m	100	400			Si	S277

SYMBOLS AND CODES EXPLAINED IN INTERPRETER

5. RECTIFIERS

IN ORDER OF (1) PIV, (2) MAX AVG FWD CURRENT (3) TEMPERATURE, and (4) TYPE No.

LINE No.	4 TYPE No.	1 PIV (V)	MAX AVG FWD DC CURRENT 2 Io (A)	3 at TEMP (°C)	MAX RATINGS @ 25°C SURGE CUR. PEAK 1 Cy (A)	PULSE WIDTH (s)	DISS. (W)	MAX TEMP (°C)	MAXIMUM FORWARD VOLTAGE DROP Vf (V)	at If (A)	at TEMP (°C)	MAX. REVERSE CURRENT Ir @25°C & Vr (A)	Ir at T & Vr (A)	TEMP T (°C)	TEST VOLT Vr (V)	AVALANCHE RATINGS MAX V BKDN (V)	MIN SLOPE (A/V)	DESCRIPTION MAT.	DWG. No.
1	MS40∅	400	7 5	150B	140			185B	1.0	7 5	150B	20u△						Si△	DO4
2#	ZR24	400	8 0	25A	80	10m		150A	1 2	5 0	25A	5 0u	20m	100A	400			Si	S235
3#	ZR204	400	8 0	25A$	160	1 0m		150	1.2	5 0	25A	5.0u	20m	100A	400			Si	S61△
4#	1S927	400	8 0	40A	430	10m		150J	1 05 △	20	25A		2.0m	150J	400			Si△	S50
5▼#	8PT4$	400	8 0	40A	250	10m		150J	2 0	8.0			13m	150	400			Si	M588
6#	S5B40	400	8 0	40A	430	10m		150J	1.05 △	20	25A		2.0m	25A	400			Si△	S50
7#	S8-04F	400	8.0	50	200	10m		150	1 1	8.0	25	50u			400			Si	M389
8	PA40†	400	8 0	55	300	8 3m		150	1 0	2 0	25	10u	100u	100	400			Si	M542
9#	SX754	400	8.0	125A	100	10m		160J	1.2	8.0	25J		1.0m	100J	400				S31a
10	E5G3	400	8 0	150	200			175	1 3	8.0	150	10u	1.0m	150	400			Si	DO4
11	1N2800	400	8 5	25A	75			175A	1.25	15	150C		5.0m	150C	400			Si	DO5
12	UT6140	400	9 0	100C	175	8 3m		175A	1 0	6 0	25	10u	.30m	100	400			Si	S277
13#	DS9-04A	400	9 0	125	240	10m			1 3	27									
14	1N2787	400	10		180			150A	1.2	10			10m	150	400			Si	DO5∅
15	1N2254	400	10	25C$	200			150	60	10	25		1.0m	150	400			Si	DO4
16	1N2254A	400	10	25C$	200			150	60	10	25		.50m	150	400			Si	DO4
17	1N2255	400	10	25$	200			150	60	10	25		1.0m	150	400			Si△	S35
18	1N2255A	400	10	25C$	200			150	.60	10	25		50m	150	400			Si△	S35
19	BR104A†	400	10	25	200	8.0m		150	1 2	5.0	25	10u			440			Si△	M538
20#	DD4526	400	10	25	120	2.0m	10	150	1 0	10	25	10u		25	400			Si	S19
21#	G4HZ	400	10	25C	230	10m	18	150C	1 1	10 †	25		3.0m	125C	400	750	25u△	Si△	DO4
22#	G4010	400	10	25A	230	10m	17	150A	1 1	10 †	25		3.0m	125C	400			Si△	DO4
23#	P4HZ	400	10	25C	230	10m	18	125C†	1 1	10 †	25		3.0u	125C	400	750	25 △	Si△	S95a
24#	P4010	400	10	25A	230	10m	17	150A	1 1	10 †	25		3 0m	125C	400			Si△	S95a
25#	SJ404E,K	400 †	10	25C	15		4 3	200C	1 0	.75	25C	10u	1.5m	200C	400			Si△	DO4∅
26▼#	10PM4†	400	10	40A	250	10m		150J	2 0	10			13m	150	400			Si	M586
27#	64R2	400	10	75A	115 §	10m		150C	1.1	10	25C		3.0m	150C	400			Si△	DO4∅
28	1N1624	400	10	100A$	150	4 0m		100A	1.2	10	25		5.0m	25	400			Si	S43
29	1N4437†	400 †	10	100	100 §	8.3m	4 0	160A	1.2	10	100		1.0m∅	100	400	700		Si	M249
30#	1S423	400	10	100B	200			175S	1.5	30	25A		50u	100	400			Si	S61△
31	S423	400	10	100A	200	10m		175A	1 5	30	25A		50u	100	400			Si△	S24c∅
32	VR400X†	400 †	10	100	75	8 3m		150	1.5	10	25	2 0	5.0	150	400			Si△	M249
33	VRA400X	400	10	100	75	8 3m		150	1 5	10	25	2 0	5.0	150	400			Si△	M249*
34	VRB400X	400	10	100	75	8 3m		150	1 5	10	25	2.0	5.0	150	400			Si△	M249*
35	VRC400X	400	10	100	75	8 3m		150	1 5	10	25	2 0	5.0	150	400			Si△	M249*
36	VRD400X	400	10	100	75	8 3m		150	1 5	10	25	2 0	5.0	150	400			Si△	M249*
37#	1S164	400	10	120B	200			175	1 6	50	25J		2.0m	175J	400			Si△	S103
38#	SA4AN12	400	10	120B	210			150J	470m∅	10			2 0m		400			Si△	DO4∅
39#	D4010	400	10	125C$	130			125B	1.5	10	25		.30m	125B	400			Si△	S4c
40#	S4AN12	400 %	10	125B	210			150J	500m∅	9.5	25B		2.0m	125B				Si△	DO4∅
41	367H	400 †	10	130C	150			180J	1 2	10	25C		10m	180C	400			Si	S27
42	408H	400	10	145C	175	8.3m		175J	1 2	10	25C		2.0m∅	175J	400			Si	DO4
43	1N2025	400 †	10	150C	110	8 3m		175C	1.5	25	25		5 0m	150C	400			Si	DO5
44	40112	400	10	150C	140 §			175C	60	10	150C	75u△	1 0m∅	150C	400			Si△	DO4
45	E6G3	400	10	150	200			175	1.3	10	150	10u	1 0m	150	400			Si	DO4
46	F2G3	400	10	150C	200			175J	1 3	30	25C		1.0m	150C	400			Si	DO5
47#	2WMT4	400	11	100C	220 §	10m		125J	1.5	40	100C		7 0m	125J	400			Si*	DO5
48▼	HEPR0134-RT	400	12	25$	300			190†										Si	DO4
49#	12GC11	400	12	50A	300			150J	1 2	12	25A		2 4	150J	400			Si	S19n
50	SL400	400	12	50A	300			175C	1.4	12	25A		2 0m	150A	400			Si	DO4∅
51#	8AN40	400	12	55A	210	10m		140B	65 ∅	13	25A		10m	120J	400			Si	S4q∅#
52#	2AF4	400	12	60A	140 §	10m	1 8	190J	95	12			2 0m	150J	400			Si	M324b#∅
53#	2AF4LV	400 #	12	60A	140 §	10m	1 8	190J	.95	12			2.0m	150J	400			Si	M324d#∅
54#	12F40	400	12	100A	150 §	10m		190J	.65	12	100B		2 5m	100B	400			Si△	DO4∅
55	40J3P	400	12	100A	150	4.0m		100A	1.3			2.5m			400			Si	S23
56	UT8140	400	12	100C	200	8.3m		175A	1 0	8.0 ∅	25	10u	30m	100	400			Si	S277∅
57#	1S1575	400	12	120C	200			150J	1 2	12	25A		2 4m	150J	400			Si	S19n
58▼#	SR10A8	400	12	120C	200 §	8 3m		150J	1.52	35	25C		3 0m	150J	400			Si△	S19t
59#	SR10L8S	400	12	120C	200			150J	1.2 †	40	25C		1 5m∅	150J	400			Si	S249a
60	1N4507	400	12	135C	240		10	175C	1 4	12			2 5m	135C	400	500		Si	DO4
61#	2AF4LH	400 #	12	140A	140 §	10m	1 8	190J	.95	12			2 0m	150J	400			Si	M324c#∅
62#	2AF4PLH	400 ∅	12	140B	160 §	10m		190B	55 ∅	12 †	25A		1.5m	150B	400			Si	M324c∅
63#	2AF4PLV	400 ∅	12	140B	160 §	10m		190B	55 ∅	12 †	25A		1 5m	150B	400			Si	M324d∅
64#	2AF4PPF	400 ∅	12	140B	160 §	10m		190B	550m∅	12 †	25A		1.5m	150B	400			Si	M324f∅
65#	2AF4PPP	400 ∅	12	140B	160 §	10m		190B	550m∅	12 †	25A		1 5m	150B	400			Si	M324e∅
66	1N1204	400 *	12	150C	100		18	190J	1 4	20	25J	10u			400			Si	S27∅
67	1N1204A	400	12	150B$	240			150B	1.3	12	25A		3.0m	150A	400			Si△	DO4△∅
68	JAN1N1204A,RA	400 $	12	150C	240	8.3m		200C	1 35	38	25	50u	1 0m	150	400			Si	DO4∅
69	1N1204B	400	12	150C$	250			150B	1 1	12			1.0m	150A	400			Si△	DO4△
70	1N2580	400	12	150C$	250			150C	1 2	20	25C	8 0u	1.0m	150C	400			Si△	DO10
71	1N2591	400 ∅	12	150C	250			150C	1.0	12		2 0u	20m	150C	400			Si△	DO10
72	1N2602	400	12	150C$	250			150C	1 5	20	25C	20u	2 0m	150C	400			Si△	DO10
73	BAV505	400	12	150C$	250			150C	1 2	12	25C	8.0u	1.0m	150C	400	520		Si	S35
74	BAV515	400	12	150C$	250			150C	1.0	12	25C	2.0u	20m	150C	400	520		Si	S35
75	BAV525	400	12	150C$	250			150C	1 5	12	25C	20u	2.0m	150C	400	520		Si	S35
76	BAV805	400	12	150C$	250			150C	1 2	12	25C	8.0u	1.0m	150C	400	520		Si	DO4
77	BAV815	400	12	150C$	250			150C	1 0	12	25C	2.0u	.20m	150C	400	520		Si	DO4
78	BAV825	400	12	150C$	250			150C	1 5	12	25C	20u	2.0m	150C	400	520		Si	DO4
79	BY505	400	12	150C$	250			150C	1 2	12	25C	8.0u	1 0m	150C	400			Si	S35
80	BY515	400	12	150C$	250			150C	1 0	12	25C	2.0u	.20m	150C	400			Si	S35
81	BY525	400	12	150C$	250			150C	1 5	12	25C	20u	2.0m	150C	400			Si	S35
82	BY805	400	12	150C$	250			150C	1 2	12	25C	8 0u	1.0m	150C	400			Si△	DO4
83	BY815	400	12	150C$	250			150C	1 0	12	25C	2.0u	.20m	150C	400			Si△	DO4
84	BY825	400	12	150C$	250			150C	1.5	12	25C	20u	2 0m	150C	400			Si	DO4
85	E7G3	400	12	150	200			175	1 3	12	150	10u	1 0m	150	400			Si	DO4
86	MR1124	400	12	150C	300 §			190J	1.0	12	25C	500u			400			Si△	DO4
87	TR1124	400	12	150C	300 §			190J	1.2	12	25C	50u	40m∅	150C	400			Si	DO4
88	UR123HA	400	12	150S$	240			175S	1 2	12	25		3 0m	150S	400			Si	DO10
89#	SU412	400	12	175C$	150			175S	1.2	12	25		3 0m	150C	400			Si△	M80
90	VTE400	400 †	12.5	100C	250	8.3m	4 0	180J	1.5	25	25C		5 0m	180	400	900		Si△	Z62*
91	VTF400	400 †	12 5	100C	250	8 3m	4 0	180J	1 5	25	25C		5 0m	180	400	900		Si△	Z62*
92	VTG400	400 †	12 5	100C	250	8 3m	4 0	180J	1 5	25	25C		5.0m	180	400	900		Si△	Z62*
93♦#	SKN12/04	400	12.5	125C	200 §	10m		180A	1.0 §	10	25J	150u			280			Si	S353∅
94	MT40	400	14	150B	240			185B	1 0 △	14	150B	100u△						Si△	DO4
95▼	HEPR0164-RT	400	15	25$	250			175†										Si	DO5
96▼#	15PT4$	400	15	40A	250	10m		150J	2 0	15			13m	150	400			Si	M589
97#	SC415	400	15	50A	150			160J	1 1	15	25A	100u	50m	100A	400			Si△	DO4
98	SCDA4	400	15	55A	300			150A	1 0	3 0	25A	10u	100u	100A	400			Si	M497
99	SCNA4	400	15	55A	300			150A	1 0	3 0	25A	10u	100u	100A	400			Si	M497
100	SCPA4	400	15	55A	300			150A	1.0	3.0	25A	10u	100u	100A	400			Si	M497
101	15GS4	400	15	75C	150	8 3m		150J	1 5	32	25A	20u	500u	150C	400			Si△	DO4∅
102#	5M40	400	15	79B	300	10m		130A	1 3 †	50	130J		5.0m		400			Si	S193a
103	40Q3	400	15	100A$	150	4 0m		150	1.5	15	25		20m	25	400			Si	S68
104	40Q4	400	15	100A$	150	4.0m		150	1.5	15	25		20m	25	400			Si	S68
105#	RN4015	400	15	100C	350	10m	25	125C	1.2	15 †	25		3.0m	125C	400			Si△	DO5
106#	SR10F8S	400	15	115C	200			150J	1 2 †	40	25C		1.5m∅	150J	400			Si	M337a
107#	SR10N8S	400	15	115C	200			150J	1.2 †§	40	25C		1.5m	150J	400				C112
108#	S4AN15	400	15	120B	220			150J	490m∅	15			3 0m		400			Si△	S324∅
109#	S4BN15	400	15	120B	220			150J	490m∅	15			3.0m		400			Si△	S320∅
110	368H	400	15	125C	240	8.3m		180J	1.3	15	25C		2.0m∅	130C	400			Si	DO4

SYMBOLS AND CODES EXPLAINED IN INTERPRETER

5. RECTIFIERS

IN ORDER OF (1) PIV, (2) MAX AVG FWD CURRENT (3) TEMPERATURE, and (4) TYPE No.

LINE No.	4 TYPE No.	1 PIV (V)	MAX AVG FWD DC CURRENT 2 Io (A)	3 at TEMP (°C)	MAX RATINGS @ 25°C SURGE CUR. PEAK 1 Cy (A)	PULSE WIDTH (s)	DISS. (W)	MAX. TEMP (°C)	MAXIMUM FORWARD VOLTAGE DROP Vf (V)	at If (A)	at TEMP (°C)	MAX. REVERSE CURRENT Ir @25°C & Vr (A)	Ir at T & Vr (A)	TEMP T (°C)	TEST VOLT Vr (V)	AVALANCHE RATINGS MAX V BKDN. (V)	MIN SLOPE (A/V)	MAT.	DESCRIPTION DWG. No.
1	409H	400	15	125C	250	8.3m		175J	1.3	15	25C		2.0m∅	175J	400			Si	DO4
2#	SR10J8S	400	15	140C	200	8.3m		175	1.2	40	25C		3.0m	175J	400	700	500u	Si△	M337
3	1N3212	400	15	150C	250	8.3m		175C	1.5	40	25C	1.0m	10m	150C	400			Si	S4n
4	703H	400	15	150	250	8.3m	15	175J	1.2	40	25	2.0m	5.0m	175J	400			Si△	M78
5#	BYY24	400	15	150J$	200 §	10m	14	150J	.90	1.0	25C		2.0m	125C	400			Si△	S72c
6#	BYY25	400	15	150J$	200 §	10m	14	150J	.90	1 0	25C		2.0m	125C	400			Si△	S72d
7	F3G3	400	15	150C	200			175J	1.3	30	25C		1 0m	150C	400			Si	DO5
8#	16F40	400	16	100B	350	10m	17	190	.55	16	100		2.0m	175	400			Si	DO4
9	1N3620	400	16	155B$	300			175B					1.5m	175B	400			Si△	DO4
10	2040	400	16.5	25A	200		4.0 ∅	150A	.60 ∅	19	25A		1.0m∅	150C	400	650		Si△	DO4#△
11#	SK403K	400	17.5	85C	230	10m		150J	1.4	50	25A	20u	500u	150C	400			Si△	DO4∅
12	S5978F,9F	400	18					150C	1.2										A1ss#
13#	S4BR8	400 %	18	120B	188		18	140B	.60 ∅	18	25		10m	125	400			Si	S122a
14	40212	400	18	150C	250 §			175A	650m∅	18	150C	100u	2.0m∅	150C	400			Si△	DO5∅
15	V400	400	18	150	300			175	1.7	18	25		2.0m	25	400			Si	DO21
16#	24R2	400	20	25A	250 §	10m	25	150J	.50	20	25J		2.5m	150J	400			Si	DO5∅
17#	1S932	400	20	40A	1.1k	10m		150J	1.05 △	40	25A		5.0m	150J	400			Si△	S51
18▼#	20PM4†	400	20	40A	250	10m		150J	2.0	20			13m	150	400			Si	M587
19#	S8B40	400	20	40A	100	10m		150J	1.05 △	40	25A		5.0m	25A	400			Si△	S51
20#	S20-04F	400	20	50	600	10m		150	1 1	60	25	10u		25	400			Si	S19p
21#	21PT40	400 *	20	100B	360 §	8.3m		170J	1.2 †	20	25		1.6m	140B	400			Si	M471
22#	BYX13/400	400	20	100C	600	10m	35	150J	2.0	100	25C		2.0m	125C	200			Si	S72c∅
23#	BYX28/400,A,B	400	20	100	350	10m		175J	1 35	60	25		1.5m	125	180			Si	Z59∅
24	A40D	400	20	110B	300			175B	1.2	20	25J	1 0m			400			Si	S88
25	A41D	400	20	110C	300			175J	1 2	20	25J	1.0m			400			Si	S88
26	A44D	400	20	110C	300			175J	1 2	20	25J	1.0m	5 0m∅	150J	400			Si	M76∅
27#	1S174	400	20	120B	400			175	1.6	100	25J		7.0m	175J	400			Si△	S102
28#	S4AN20	400	20	120B	250			150J	480m∅	20			3.0m		400			Si△	S324∅
29#	S4BN20	400	20	120B	250			150J	480m∅	20			3.0m		400			Si△	S320∅
30#	BYY16	400	20	125A	320 §	1		150J	.80	1.0	25		2.0m	125C	400			Si	S72j
31#	DS22-04A	400	20	125	380	10m		150	1 4	60		10u	4.0m	150					
32♦#	SKN20/04	400	20	125C	270 §	10m		180A	1.0 §	4 5	25J	150u			280			Si	S171s∅
33	1N1196A	400	20	150C	350			175C	60	20	25		2.5m	150C	400			Si△	DO5△
34	417H	400	20	150C	350	8 3m		175J	1 05	20	25C		2.0m∅	150C	400			Si	DO5
35	F4G3	400	20	150C	600			175J	1 3	50	25C		2.0m	150C	400			Si	DO5
36	TM49	400	21	75C				190S	1 2	12	25		2 0m∅	150	400			Si	S145
37#	3WM4	400	21	100C	220 §	10m		125J	1 4	60	100C		14m	125J	400			Si*	S8
38	1N2785	400	22	40A$	200			175C	1.5	25	25C		1.0m	150C	400			Si	DO4∅
39	MR754	400 †	22	60	400			175J	900m	6 0	25A	250u	1.0	150J	400			Si△	A264
40	1N3965	400	22	120C$	200		4 0 ∅	150A	.60 ∅	26	25A		1.0m∅	150C	400	650		Si△	DO4△#
41	1N1457	400	25					190J	1.5	25	25J	25m						Si	M56d
42#	25B40T†	400	25		700	20m		150A				20m			400				M563
43	1N3495	400 †	25	25C	300	8 3m		175C	1 7	18	150C	1.0u	4 0m	150C	400			Si	DO21
44#	25GC12	400	25	50A	600			150J	1 2	25	25A		6 0	150J	400			Si	S19n
45	PB40†	400	25	55	300	8.3m		150	1 0	3.0	25	10u	100u	100	400			Si	M542
46	PBU40†	400	25	55	300	8 3m		150	1.0	3.0	25	10u	100u	100	400			Si	M542a
47▼	S25A40	400	25	55	300	8 3		150	1 0	3 0	25	10u	100u	100	50			Si	M542
48#	4AF4	400	25	60A	350 §	10m	80	190J	95	25			3.0m	150J	400			Si	M324b#∅
49#	4AF4LV	400 #	25	60A	350 §	10m	80	190J	.95	25			3 0m	150J	400			Si	M324d#∅
50	25P40	400	25	100C	300			175J	7 0 ∅	25 †	25C		7.0m	150C	400			Si△	M38ab∅
51	VT400†	400 †	25	100	250	8 3m		180	1 5	25	25		5.0	180	400	900		Si△	M560
52	VTA400	400 †	25	100C	250	8 3m	4 0	180J	1 5	25	25C		5.0m	180	400	900		Si△	Z62*
53	VTB400	400 †	25	100C	250	8.3m	4 0	180J	1 5	25	25C		5 0m	180	400	900		Si△	Z62*
54	VTC400	400 †	25	100C	250	8 3m	4 0	180J	1 5	25	25C		5 0m	180	400	900		Si△	Z62*
55	VTD400	400 †	25	100C	250	8 3m	4 0	180J	1.5	25	25C		5.0m	180	400	900		Si△	Z62*
56	VY400X†	400 †	25	100	150	8 3m		150	1 8	25	25	2 0	5 0	150	400			Si△	M560
57#	1S1841	400	25	110C	300			150J	1.2	25	25A		6.0	150J	400			Si	S19n
58#	SR20F8S	400	25	120C	400			150J	1.2 †	80	25C		1.5m∅	150J	400			Si	M337a
59#	SR25A8S	400	25	120C	600			150J	1 2 †§	80	25C		3 0m	150J	400				S249b
60#	DD7126	400	25	139B	400	10n	30	175S	1.3	25	25B	10u	500u	150C	400			Si△	S52d∅
61#	4AF4LH	400 #	25	140A	350 §	10m	80	190J	.95	25			3 0m	150J	400			Si	M324c#∅
62#	4AF4PLH	400 ∅	25	140B	400 §	10m		190	55 ∅	25 †	25A		2.0m	150B	400			Si	M324c
63#	4AF4PLV	400 ∅	25	140B	400 §	10m		190	55 ∅	25 †	25A		2 0m	150B	400			Si	M324d
64#	4AF4PPF	400 ∅	25	140B	400 §	10m		190	550m∅	25 †	25A		2 0m	150B	400			Si	M324f∅
65#	4AF4PPP	400 ∅	25	140B	400 §	10m		190	550m∅	25 †	25A		2 0m	150B	400			Si	M324e∅
66	1N1196	400 *	25	145C	125		30	190J	1 4	30	25J	10u			400			Si	S29
67	1N2158	400 ∅	25	145B	400			200J	60 ∅	25	145B		3 0m∅	145B	400			Si*	DO5∅
68	418H	400	25	145C	400	8.3m		175J	1 1	25	25C		2.0m∅	145C	400			Si	DO5
69	F5G3	400	25	150C	600			175J	1 3	90	25C		2.0m	150C	400			Si	DO5
70	PBT40$	400	27.5	55	300	8 3m		150	1 0	3 0	25	10u	100u	100	400			Si	M543
71#	ZR34C	400	30	20A$	400	10m		140A	1 2	30	25	500u	2.0m	100	400			Si△	S38
72	1N1437	400	30	25B	160	1	38	175A	1 2	60	25		5.0m	150B	400				S143
73	3140	400	30	25A	200		4 0 ∅	150A	60 ∅	34	25A		1.0m∅	150C	400	650		Si△	DO5#△
74▼#	30PT4$	400	30	40A	250	10m		150J	2 0	30			13m	150	400			Si	M590
75	PBC40	400	30	55C	300			150C	1.0	3 0	25C	10u	100u	100C	400			Si	M447∅
76	1N3663	400 †	30	100C$	400 §			175C	70 ∅	25	25		3.0m∅	150	400			Si	DO21
77	PZ140D	400 †	30	100C	400			175C	.70 ∅	2 0	25C		3 0m∅	150C	400	750		Si	DO21∅
78#	3C4	400	30	110C	500	10m		150J	1.5	30	40A		3.0m	25	400			Si*	S181
79#	S4AN31	400	30	120B	347			150J	600m∅	30			4.0m		400			Si△	S325∅
80#	S4BN31	400	30	120B	347			150J	600m∅	30			4 0m		400			Si△	S321∅
81	G3G3	400	30	150C	1 5k			175J	1.3	200	25C		5.0m	150C	400			Si	DO8
82#	15AN40	400	34	20A	500	10m		140B	700m∅	25	25A		20m	120J	400			Si	S241a∅#
83	1N1461	400	35					190J	1 5	35	25J	25m						Si	M56d
84	1N2283	400	35	25$	400			150	60	35	25		5.0m	150	400			Si△	DO5
85#	DA2026	400	35	25	45	10m	1 8	150	1 0	1 0	25	1.0u	20m	150	400	750		Si△	DO3
86#	DD 716	400 *	35	25A				100A	92	35	25A		1.0m	150A	400			Si	S125c
87▼	HEPR0255-RT	400	35	25$	400			190†										Si	DO5
88#	R4HZ	400	35	50C	250	10m	35	175C†	1.5	20 †	25		3.0m	150C	400	750		Si△	DO5
89#	D22-400B	400	35	80C	500 §	10m		150J	1 35	40	25J	1 0m		25J	400			Si	S4u%
90#	D22-400C	400	35	80C	500 §	10m		150J	1 35	40	25J	1 0m		25J	400			Si	S69e%
91#	DA776	400	35	80B	300	10m	46	125	1 3	100	25	15u	50m	125	400			Si△	S143a
92#	DB776	400	35	80B	300	10m	46	125	1 3	100	25	15u	.50m	125	400			Si△	S143a
93	371H	400 †	35	100C	500	8.3m		160J	1 2	35	25C		20m	160J	400			Si	DO5
94#	R43HZ	400	35	100C	500	10m		150C	1 5	110	25C		5.0m	150C	400			Si△	DO5
95	1N4526	400	35	115C	500		20	175C	1 4	35			3 5m	115C	400	500		Si	DO5
96	1N1188	400	35	140C	500	8 3		140C	1 7	35	140C							Si	S29a
97#	34R2	400	35	140C	500 §	10m		200J	1 3	35	25C		10m	150C	400			Si△	DO5∅
98#	DA716	400	35	140B				150A	.92	35	25A		1.0m	150A	400			Si△	S4m∅
99	127350D	400	35	150	500	8 3m		200J	1.3	35	25C		4.0m∅	150C	400			Si	DO21
100#	SUT401K	400	36	85C	600	10m		150J	1 6	90	25A	200u	3.0m	150C	400			Si△	DO5∅
101	TR402	400	37	65C				175S	1 5	50	25C		5 0m∅	150C	400			Si	DO5
102#	40B40T†	400	40		1 1k	20m						20u			400				M563
103#	BYX52-600	400	40	25C	650			175J	1.8	150	25J		1.6m	125J	400			Si	DO5∅
104#	1S937	400	40	40A	2.7k	10m		150J	1.05	100	25A		10m	150J	400			Si△	#
105	S12C40	400	40	40A	2 7k	10m		150J	1.05	100	25		10m	25A	400			Si△	#
106#	K4040	400	40	90C	800	10m	44	125C	1.2	40 †	25		4.0m	125C	400			Si△	S245
107#	6WM4	400	40	100C	650 §	10m		125J	1.4	110	100C		14m	125J	400			Si*	S8
108#	10M40	400	40	104B	800	10m		130A	1.2 †	120	130J		10m		400			Si	S4s
109▼#	4C4	400	40	110C	700	10m		150S	1 5	40	40A	3.0m	12m	150	400			Si*	S181
110	419H	400	40	120C	500	8 3m		175J	1.2	40	25C		2.0m∅	120C	400			Si	DO5

SYMBOLS AND CODES EXPLAINED IN INTERPRETER

5. RECTIFIERS

IN ORDER OF (1) PIV, (2) MAX AVG FWD CURRENT (3) TEMPERATURE, and (4) TYPE No.

LINE No.	4 TYPE No.	1 PIV (V)	MAX AVG FWD DC CURRENT 2 Io (A)	3 at TEMP (°C)	MAX RATINGS @ 25°C SURGE CUR. PEAK 1 Cy (A)	PULSE WIDTH (s)	DISS (W)	MAX. TEMP (°C)	MAXIMUM FORWARD VOLTAGE DROP Vf (V)	at If (A)	at TEMP (°C)	MAX. REVERSE CURRENT Ir @25°C & Vr (A)	Ir at T & Vr (A)	TEMP T (°C)	TEST VOLT Vr (V)	AVALANCHE RATINGS MAX V BKDN. (V)	MIN SLOPE (A/V)	DESCRIPTION MAT.	DWG. No.
1#	DS42-04A	400	40	120	1 1k	10m		150	1 15	60		20u	4 0m	150					
2#	S4AN40	400	40	120B	485			150J	500mØ	40			4 0m		400			Si△	S325☑
3#	S4BN40	400	40	120B	485			150J	500mØ	40			4 0m		400			Si△	S321☑
4#	S5BR25	400 †	40	120B	250	20m		140B	1 2	40			20m		400			Si*	S122☑
5#	S5CR25	400 †	40	120B	250	20m		140B	1.2	40			20m		400			Si*	S123☑
6#	S5DR25	400 †	40	120B	250	20m		140B	1 2	40			20m		400			Si*	S125☑
7#	S5ER25	400 †	40	120B	250	20m		140B	1.2	40			20m		400			Si*	S124☑
8	40HF40	400 †	40	140C	500 §	8 3m		180J	1 3	40 †	140C		7.0m☑	140C	400			Si△	S21e☑
9	1N1188A	400	40	150C	800		68	200C	.65	40	150C	15uØ	2 2m☑	150	400			Si△	DO5
10#	BYY15	400	40	150J	800 §	10m		150J	80	1 0	25		2 0m	125C	400			Si	S72j
11	G4G3	400	40	150C	1 5k			175J	1 3	200	25C		5 0m	150C	400			Si	DO8
12#	S5BR30	400 †	44	125B	250	20m		140B	1.1	44			16m		500			Si*	S122☑
13#	S5CR30	400 †	44	125B	250	20m		140B	1.1	44			16m		500			Si*	S123☑
14#	S5DR30	400 †	44	125B	250	20m		140B	1 1	44			16m		500			Si*	S125☑
15#	S5ER30	400 †	44	125B	250	20m		140B	1.1	44			16m		500			Si*	S124☑
16	127351D	400	44	150	700	8 3m		200J	1.3	44	25C		4 0m☑	150C	400			Si	DO21
17#	25AN40	400	45	20A	700	10m		140B	700mØ	40	25A		20m	120J	400			Si	S241a☑#
18#	25ANS	400	45	20A	700	10m		140B	700mØ	40	25A		20m	120J	400			Si	S241a☑#
19	TR326	400	45	50C	300			175C	1.5	50	25C	1 0m△	4 0m☑	150	400			Si	M78
20	1N2453	400	45	60C	300			175B	1 1	20	25		5.0mØ	150B	400			Si△	DO5
21♦#	SKN45/04	400	45	125C	600 §	10m		180A	1.2 §	60	25J	300u			280			Si	S171t☑
22	1N1465	400	50					190J	1.5	50	25J	50m						Si	M56c
23	SLEA4†	400	50		150	16m			1 0	3 0	25	5 0u	100u	100	400			Si	M546
24	1N2789	400	50	40A$	600			175C	1.5	100	25C		2.0m	150C	400			Si	DO5☑
25#	SJ403E,K	400 †	50	100C	30		3 0	150A	1.0	75	25C	10u	.30m	150C	400			Si△	DO4☑
26#	SL403A,K	400 †	50	100C	150		10	150C	1.2	10	25C	50u	1 5m	150C	400			Si△	DO4☑
27#	D42-400	400	50	115C	1 0k§	10m		150J	1 15	60	25J	1.0m		25J	400			Si	S171q%
28	1N3969	400	50	120C$	600		7 0 Ø	150A	.60 Ø	60	25A		2 0mØ	150C	400	650		Si△	DO5△#
29	50C40	400	50	140	400	1	55	190J	1.1	50	25		20m	150	50			Si	DO5△☑
30	1N1684	400	50	150C	700	8 3m		165C	1.2	1 1	150C		25m	150C	400			Si	S8q
31	1164D	400	50	150	1 0k	8.3m		200J	1.2	40	25C		3.0m☑	175J	400	750		Si	DO5
32	MR1207	400	50	150C	800	8 3m		190J	.40 Ø	50	150C		10m	150C	400			Si	M226☑
33#	S500-4	400	55	50	3.7k	20m		120	1 2	500	50	1 0m			400			Si	M189
34#	S4AN55	400	55	125B	935			150J	500mØ	55			6.0m		400			Si△	☑
35#	S4BN55	400	55	125B	935			150J	500mØ	55			6.0m		400			Si△	S322☑
36#	S4GN55	400	55	125B	935			150J	500mØ	55			6.0m		400			Si△	S322☑
37	1N2465	400	60	60C$	450			175B	1.1	30	25		5.0mØ	150B	400			Si△	DO5
38#	SB401K	400	60	85C	700	10m		150J	1 7	210	25A	200u	3.0m	150C	400			Si△	S168a☑
39#	SBT401K	400	60	85C	700	10m		150J	1.7	210	25A	200u	3.0m	150C	400			Si△	S168a☑
40	1N2135	400	60	100C	700 §			175C	1.4	60	115C		30m△	175C	320			Si	DO5
41	1N2135A	400	60	100C	900 §			200C	1.3	60	140C		30m△	200C	320			Si	DO5
42#	K46HZ	400	60	110C	1 2k	10m	70	150C	1.2	60 †	25		5 0m	125C	400	750	50u△	Si△	S245
43#	KS4060	400	60	110C	1 5k	10m	67	150C	1.2	60 †	25		5.0m	125C	400			Si△	S245
44#	25G40	400	60	112B	850 §	10m	60	190B	55 Ø	25	25A							Si*	DO5☑
45#	20M40	400	60	126B	1 0k	10m		175A	1 5 †	180	175J		10m		400			Si	S4t
46	H5G3	400	60	150C	3 0k			175J	1 3	300	25C		10m	150C	400			Si	DO9
47	TR403	400	65	75C				175C	1 5	100	25C		5.0m☑	150C	400			Si	DO5
48#	45AR40	400	70	25A	1 1k	10m		140B	70 Ø	90	25A		25m	120J	400			Si	S8j#
49#	45ARS	400	70	25A	1 1k	10m		140B	70 Ø	90	25A		25m	120J	400			Si	S8j#
50	1N4137	400	70	100C	750 §			175C	1 6	70	100C		36m	175C	400			Si	DO5
51#	BYX34/400	400	70	100B	1 0k	10m	30	150J	1.7	250	150J		12m	125J	400	770		Si	S12c☑
52#	S4AN71	400	70	120B	1 2k			150J	470mØ	70			6 0m		400			Si△	☑
53#	S4BN71	400	70	120B	1 2k			150J	470mØ	70			6.0m		400			Si△	S323☑
54#	S4GN71	400	70	120B	1 2k			150J	470mØ	70			6 0m		400			Si△	S322☑
55	70H40	400	70	125C	1 2k§	8 3m		200J	1 3	70 †	125C		10m☑	125C	400			Si*	DO5☑
56	70H40A	400 †	70	125C	1 2k§	8 3m		200J	1 3	70	125C		10m☑	125C	400			Si△	DO5☑
57	1N1401	400 †	70	150C	1 2k			190J	1 25	70	150C		30m	150C	400			Si	S14b
58	CH109D2	400	70	150C	1 5k	8 3m		200C	1 3 △	150	150C		15mØ	150C	400			Si*	S53△
59	J4G3	400	70	150C	4 0k			175J	1 2	300	25C		10m	150C	400			Si	DO9
60	J5G3	400	70	150C	4 0k			175J	1 2	300	25C		10m	150C	50			Si	DO9
61	40JH3	400	72		150	4 0m		100A	1 2									Si	S11f☑
62	1N1469	400	75					190J	1 5	75	25J	50m						Si	M56c
63#	10WM4	400	75	100C	1 0k§	10m		125J	1 5	200	100C		20m	125J	400			Si*	M43a
64	75E40	400	75	150C	850	4 0m		190J	1 0	90	25C		40m	25C	400			Si	S83a△☑
65	75F40	400	75	150C	850	4 0m		190J	1 0	90	25C		40m	25C	400			Si	M56a△☑
66#	S5AN70	400 †	77	115B	450	20m		150B	1 0	70			30m		500			Si	F19
67#	S5BR70	400 †	77	115B	450	20m		150B	1.0	70			40m		500			Si	F19
68#	1S942☑	400	80	40A	5 4k	10m		150J	1 05	200	25A		20m	150J	400			Si△	M26#
69#	S16B40	400	80	40A	5 4k	10m		120J	1.05 △	200	25A		20m	25A	400			Si△	M26#
70#	8C4	400 †	80	100J	1 2k		100	150J	1 3	80	100C		5.0mØ	25J	400			Si*	S110a
71	1N1473	400	100					190J	1 5	100	25J	60m			100			Si	M56f
72	ST640	400	100	25A	1 6k			190J	1.2	100	25A		5.0m	25	400			Si	Z29
73#	70BN40	400	100	40A	1 8k	10m		140B	70 Ø	130	25A		30m	120J	400			Si	S8k☑#
74#	70BNS	400	100	40A	1 8k	10m		140B	70 Ø	130	25A		30m	120J	400			Si	S8k☑#
75#	TH1004	400	100	40A	950	10m		175S	95	100	25A		30m	150J	400			Si△	S101
76▼#	101R4S	400	100	50C	1 6k			175J	1 6	500	25	20m		175J	400			Si	S357
77	1N2433	400	100	75C	950			175B	1 1	50	25		10mØ	150B	400			Si△	DO8
78#	10C4☑	400 †	100	100J	1 5k		120	150J	1 2	100	100C		5.0mØ	25J	400			Si*	S110a
79#	1S434R	400	100	105B	1 6k			175J	1 6	500	25J		20m	175J	400			Si△	S12f
80#	SR100K8S	400	100	120C	1 6k			120†	1.0 †	105	25C		6.0m	150J	400			Si	M228d
81♦#	SKN100/04	400	100	125C	1 5k§	10m		180A	1.0 §	48	25J	500u			280			Si	S171v
82	1N3291	400	100	130C	1 6k	8 3m		200C	1 5	100	130C		24m	130B	400			Si	DO8
83	1N3291A	400	100	130C	2 3k			200C	1 25	100	130C		24m	130C	400			Si	DO8
84	1N3291R	400	100	130B	1.6k			200A	900m	100	200J		23	200J	400			Si	DO8
85	A70D	400	100	130B	1.6k	8 3m		200J	600mØ	100	130B		9 0m	130B	400			Si	DO8
86	A71D	400	100	130B	1 6k	8.3m		200J	600mØ	100	130B		9.0m	130B	400			Si	DO8
87	MR1217SB	400	100	135C	2.0k§	8 3m	160	190J	400mØ	80 †	150C		15m	150C	400			Si△	S199
88	MR1217SL	400	100	135C	2.0k§	8.3m	160	190J	400mØ	80 †	150C		15m	150C	400			Si△	S87a
89	MR1817SB	400	100	135C	2 0k§	8 3m	160	190J	400mØ	80 †	150C		15m	150C	400			Si△	S199m
90	MR1817SL	400	100	135C	2 0k§	8.3m	160	190J	400mØ	80 †	150C		15m	150C	400			Si△	S87f
91	100E40	400	100	150C	2 0k	4 0m		190J	1 0	140	25C		40m	25C	400			Si	S83△☑
92	100F40	400	100	150C	2 0k	4.0m		190J	1 0	140	25C		40m	25C	400			Si	M56a△☑
93▼	100F40△	400	100	150C	2 0k	4 0m		190J	1 0	140	25C		40m	25C	400			Si	M56a△☑
94	150L40A	400 †	100	150C	3.0k§	8 3m		200J	1 2	150 †	150C		16m☑	150C	400			Si*	DO30☑
95#	AS4☑	400	100	150	4 0k	20m		150										Si	
96	1N3973	400	104	120C$	1 5k		12 Ø	150A	.60 Ø	120	25A		5.0mØ	150C	400	650		Si△	DO8△#
97#	S200-04F	400	110	50	4 0k	10m		150	1.3	600	25	20m			400			Si	M189a
98	1N1665	400	116	120C	3 0k			175J	1 3	200	25		10m	150	400			Si	S14d
99	10912D	400	125	150	1 7k	8 3m		200J	1.3	125	25C		7 0m☑	150C	400			Si	DO8
100#	125BN40	400	130	20A	3 0k	10m		140B	700mØ	180	25A		40m	120J	400			Si	S120a☑#
101#	125BNS	400	130	20A	3 0k	10m		140B	700mØ	180	25A		40m	120J	400			Si	S120a☑#
102♦#	SKN130/04	400	130	125C	2 0k§	10m		180A	1.0 §	60	25J	500u			280			Si	S171u☑
103#	BYX32/400	400 †	130	135C	1 6k			190J	1 7	500	190J		20m	175J	400			Si△	S203b☑
104	1N1477	400	150					190J	1 5	150	25J	60m			100			Si	M56f
105	1N2443	400	150	75C$	1 2k			175B	1 1	70	25		10m	150B	400			Si△	DO8
106♦#	15C4	400	150	90C	2 0k	10m		150S	1 5	150	40A	6 0m	30m	150	400			Si	S12j
107	1N3088	400	150	100C	3 0k§			200C	1 2	150	150C		17m	150	400			Si	DO30
108♦#	BYX23/400	400	150	100A	1 6k§	10m	30	190J	1 6	500	25J		30m	175J	400			Si△	S128
109	1N4590	400	150	110	3 0k			200A	1 4	150	110		28m	200	100			Si	DO8☑
110#	S4PN125	400 %	150	110B	3 3k			150J	1 1	150			30m		400			Si*	S319☑

SYMBOLS AND CODES EXPLAINED IN INTERPRETER

5. RECTIFIERS

IN ORDER OF (1) PIV, (2) MAX AVG FWD CURRENT (3) TEMPERATURE, and (4) TYPE No.

LINE No.	4 TYPE No.	1 PIV (V)	MAX AVG FWD DC CURRENT 2 Io (A)	3 at TEMP (°C)	MAX RATINGS @ 25°C SURGE CUR. PEAK 1 Cy (A)	PULSE WIDTH (s)	DISS. (W)	MAX TEMP (°C)	MAXIMUM FORWARD VOLTAGE DROP Vf (V)	at If (A)	at TEMP (°C)	MAX REVERSE CURRENT Ir @25°C & Vr (A)	Ir at T & Vr (A)	TEMP T (°C)	TEST VOLT Vr (V)	AVALANCHE RATINGS MAX V BKDN. (V)	MIN SLOPE (A/V)	MAT.	DESCRIPTION DWG. No.
1#	S4BR125	400 %	150	115B	3 3k			150J	1 1	150			40m		400			Si*	F19
2#	S4KN125	400 %	150	115B	3 3k			170J	1 1	150			30m		400			Si*	F80Ø
3#	45M40	400	150	116B	3 0k	10m		175A	1 5 †	500	175J		20m		400			Si	S8m
4#	SU401A,K	400 †	150	120C	600		30	150C	1 2	30	25C	200u	2 0m	150C	400			Si△	S168aØ
5#	BYX14/400	400	150	125C	3.0k	10m	240	190J	1 8	750	175C		15m	175C	200			Si	M294Ø
6#	S4LN125	400 %	150	125B	3 3k			150J	1 1	150			30m		400			Si*	M521Ø
7	150K40A	400 †	150	150C	3.0k§	8 3m		200J	1 2	150 †	150C		16mØ	150C	400			Si*	DO8Ø
8	ST740	400	160	25A	3.0k			190J	1 2	160	25A		40m	25	400			Si	Z28
9	ST1040	400	160	25	3.0k			190J	1.2	160	25		40m	25	400			Si	Z27
10#	DS110-04A	400	160	75	3 2k	10m		150	1 4	500		40u	6 0m	150					
11#	D100-400	400	160	95C	1 8k§	10m		150J	1.05	90	25J	3 0m		25J	400			Si	S96b%
12#	ST2△	400	160	110C	3 8k	10m	190	150C	1.3	160 †	25		4.0m	125C	400			Si△	S245a
13	DRS164	400	160	115C	2 5k	8 3m	170	175J	1 45	160 †	115C	5 0m	15m	115C	400			Si△	S210aØ
14	S5140	400	160	120C	2.2k		3 ØØ	175J	60 Ø	160	25A		10mØ	150C	400	650		Si△	DO9△
15	1N1286	400 *	160	125C	1 3k			190J	1 3	210	25J		40m	25	400			Si	S14g
16	1N1296	400 *	160	125C	1 3k			190J	1 3	210	25J		40m	25	400			Si	S8e
17	1N3267	400 †	160	125C	2 0k			190J	1 25	160	125C		12m	125C	400			Si	DO9Ø
18	160E40	400	160	150C	5 0k	4 0m		190J	1 0	160	25C		40m	25C	400			Si	S83△Ø
19♦#	SKN170/04	400	170	125C	3 0k§	10m		180A	1 0 §	80	25J	700u			280			Si	S171w
20#	S5AN125	400 †	175	125B	1 1k	20m		150B	1 1	175			30m		500			Si	F19
21	175E40	400	175	150C	5 0k	4 0m		190J	1 0	175	25C		40m	25C	400			Si	S83△Ø
22	175F40	400	175	150C	5 0k	4 0m		190J	1 0	175	25C		40m	25C	400			Si	M56a△Ø
23#	200BN40	400	180	20A	7 5k	10m		140B	700mØ	240	25A		40m	120J	400			Si	S120aØ#
24#	200BNS	400	180	20A	7 5k	10m		140B	700mØ	240	25A		40m	120J	400			Si	S120aØ#
25	SCDAS4	400	200	55A	900			150A				50u	500u	100A	400			Si	M495
26	SCNAS4	400	200	55A	900			150A				50u	500u	100A	400			Si	M495
27	SCPAS4	400	200	55A	900			150A				50u	500u	100A	400			Si	M495
28	DRS204	400	200	110C	3 5k	8 3m	220	175J	1 40	200 †	110C	5 0m	15m	110C	400			Si△	S210aØ
29#	T22△	400	200	110C	3 8k	10m	240	150C	1 3	200 †	25		4 0m	125C	400			Si△	S246
30	200UB40	400	200	115C	3 5k§	8 3m		165J	1 25	200 †	115C		10mØ	115C	400			Si*	S279Ø
31	S4BN200	400 %	200	120B	4 0k		250	150B	60 Ø	190	25B		40m	125C	400			Si	F19a
32	411H	400	200	130	3 0k	8 3m		200J	1 5	125	130C		8 0mØ	130C	400			Si	DO8
33	MR1227FB	400	200	138C	3 6k	8 3m		190C	40 Ø	160	150C		20m	150C	400			Si△	M227
34	MR1227FL	400	200	138C	3 6k	8 3m		190C	40 Ø	160	150C		20m	150C	400			Si△	M228
35	MR1227SB	400	200	138C	3 6k	8 3m		190C	40 Ø	160	150C		20m	150C	400			Si△	S199a
36	MR1227SL	400	200	138C	3 6k	8 3m		190C	40 Ø	160	150C		20m	150C	400			Si△	S87b
37#	20C4	400	220	100C$	3 3k	10m		150	1 2	220	25		5 0m	25	400			Si	S184
38	410H	400	220	110C	3 0k	8 3m		190J	1 3	150	110C		10mØ	110	400			Si	DO8
39▼#	1S2344	400	240	92C	5 0k§	8.3m		150J	1 2	400	25C		30m	150J	400			Si△	M568
40♦#	FD200B8	400	240	92C	5 0k§	8 3m		150J	1 2	400	25C		30m	150J	400			Si△	M568
41	1N1675	400 *	240	120C	1 8k			190J	1 25	300	25J		50m	25	400			Si	S14f
42	1N3168	400 *	240	120C	3 0k			190J	1 25	240	25C		16m	125C	400			Si	S14f2
43	1N1335	400 *	240	125C	1 8k			190J	1 25	300	25J		50m	25	400			Si	S14f2
44	1N1381	400 *	240	125C	1 8k			190J	1 25	300	25J		50m	25	400			Si	S14h
45♦#	SKN240/04	400	240	125C	5 0k§	10m		180A	1 0 §	125	25J	1 0m			280			Si	S171wØ
46	240E40	400	240	150C	7 5k	4 0m		190J	1 0	240	25C		50m	25C	400			Si	S83△Ø
47	240F40	400	240	150C	7 5k	4 0m		190J	1 0	240	25C		50m	25C	400			Si	M56a△Ø
48#	BYX27/400	400	250		4 0k	10m	80k	19J	1 8	1 2k	190J		50m	175J	400	800		Si	M105
49	ST840	400	250	25A	5 0k			190J	1 2	250	25		50m	25	400			Si	Z27
50	ST940	400	250	25A	5.0k			190J	1 2	250	25		50m	25	400			Si	Z28
51▼#	251F4S	400	250	50	4 5k			175J	1 45	1 0k	25J							Si	S12fØ
52	A96D	400	250	70C	3 3k	8 3m		125J	1 25	250	25		16m	70C	400			Si	S120b
53	A97D	400	250	70C	3 3k	8 3m		125J	1.25	250	25J		16m	70C	400			Si	S120b
54♦#	25C4	400	250	90C	4 0k	10m		150S	1 5	250	90C	8 0m	45m	150	400			Si	S184
55	1N2061	400	250	100C	4 5k§			200C	1 3 †	250	135C		17m	135	320			Si	DO9
56	CH119D	400 †	250	100C	4 0k			200S	1 3	250	25C		10m	100C	400			Si	DO8Ø
57#	SSiL9920	400	250	100C	6 1k	10m		150J	1 3	785	25J		40m	150J				Si△*	M572a
58#	70M40	400	250	107B	4 0k	10m		175A	1.5 †	800	175J		20m		400			Si	S8n
59	DRS244	400	250	110C	4 5k	8 3m	280	175J	1 40	250 †	110C	5 0m	15m	110C	400			Si△	S210aØ
60	1N3977	400	250	120C$	4 0k		25 Ø	150A	60 Ø	250	25A		10mØ	150C	400	650		Si△	DO9△#
61#	BYX33/400	400	250	120A	4 0k	10m		190J	1 8	1 2k	190J		50m	175J	400			Si△	M294Ø
62	1N3738	400	250	130C	4 5k	8 3m		200C	1 1 △	250	130C		16m	130B	400			Si	DO9Ø
63	A90D	400	250	130B	4 5k	8.3m		200J	400mØ	250	130B		16m	130B	400			Si	DO9
64	A91D	400	250	130B	4 5k	8.3m		200J	400mØ	250	130B		16m	130B	400			Si	DO9
65	70S40	400	250	135C	4 5k§	8 3m		200J	1 25	250 †	135C		25mØ	135C	400			Si*	S8b2Ø
66	70T40	400	250	135C	4 5k§	8 3m		200J	1 25	250 †	135C		25mØ	135C	400			Si*	S8b1Ø
67#	S21N400H	400	270	75C	3 4k	10m		175J	1 45	600	25A	30m	80m	175C	400			Si△	M199
68	1N4050	400	275	120C	5 0k			190J	1 35	275	120C		15m	120C	400			Si	DO9Ø
69	CS131D	400 †	275	120C	4 0k			200	1 3	275	25C		16mØ	130C	400			Si	DO9
70	275E40	400	275	150C	7 5k	4 0m		190J	1 0	275	25C		50m	25C	400			Si	S83△Ø
71	275F40	400	275	150C	7 5k	4 0m		190J	1 0	275	25C		50m	25C	400			Si	M56a△Ø
72#	S20N500JA	400	285	70C	4 5k	10m		150J	1 25	600	25A	5.0m	30m	150C	400			Si△	M378Ø
73#	S4EN270	400 %	290	125B	1 5k	20m		160B†	975	340			50m	125B	400			Si*	M307
74#	S4FN270	400 %	290	125B	1 5k	20m		160B†	975	340			50m	125B	400			Si*	M357c
75#	S4GN270	400 %	290	125B	1 5k	20m		160B†	975	340			50m	125B	400			Si*	M357a
76♦#	S4HN270	400 %	290	125B	7 2k	10m		160B†	975m	340			50m	125B	400			Si*	M366a
77#	40C4	400	300	100C	5 0k	10m		150J		400			10m	25J				Si*	M366
78#	S4EN301	400	300	100B	5 1k	10m	410	100B	65 Ø	300	100B		35m	100B	400			Si	M307
79#	S4FN301	400	300	100B	5 1k	10m	410	100B	65 Ø	300	100B		35m	100B	400			Si	M248
80#	S4GN301	400	300	100B	5 1k	10m	410	100B	65 Ø	300	100B		35m	100B	400			Si	M248a
81#	S4HN301	400	300	100B	5 1k	10m	410	100B	65 Ø	300	100B		35m	100B	400			Si	M370
82#	TA3004R	400	300	100C	6 0k	10m			1 4	1.0k			15m	150C	400				S316
83#	T32	400	300	105C	5 0k	10m	350	150C	1 3	300 †	25		4.0m	125C	400			Si△	S246
84▼#	YSD212P4K38	400	300	105B	6 6k	10m		185J	1 21	1.0k	150J		28m	185J	400			Si	S365
85	300U40A	400 †	300	120C	5 0k§	8.3m		200J	1 4	300 †	120C		16mØ	120C	400			Si*	DO9Ø
86	MR1237FB	400	300	135C	5 0k	8 3m		190J	40 Ø	240	150C		35m	150C	400			Si	M227aØ
87	MR1237FL	400	300	135C	5 0k	8 3m		190J	40 Ø	240	150C		35m	150C	400			Si	M228bØ
88	MR1237SB	400	300	135C	5 0k	8 3m		190J	40 Ø	240	150C		35m	150C	400			Si	S199bØ
89	MR1237SL	400	300	135C	5 0k	8 3m		190J	40 Ø	240	150C		35m	150C	400			Si	S87cØ
90#	30C4	400	300	150	4 5k							810m	4 5	150	1 5				
91#	S4EN290	400 %	310	125B	1 6k	20m		160B†	975	340			50m	125B	400			Si*	M307
92#	S4FN290	400 %	310	125B	1 6k	20m		160B†	.975	340			50m	125B	400			Si*	M357c
93#	S4GN290	400 %	310	125B	1 6k	20m		160B†	975	340			50m	125B	400			Si*	M357a
94♦#	S4HN290	400 %	310	125B	7 2k	10m		160B†	975m	340			50m	125B	400			Si*	M366a
95#	SSiL9820	400	320	96C	6 7k	10m		150J	1 35	1 0k	25J		40m	150J				Si△*	M572
96#	S30N500JA3	400	320	100C	4 8k	10m		175J	1 15	600	25A	2 0m	30m	175C	400			Si△	M378
97#	S30N500JA4	400	320	100C	4 8k	10m		175J	1.25	600	25A	2 0m	30m	175C	400			Si△	M378
98♦#	SKN320/04	400	320	125C	8 0k§	10m		180A	1 0 §	200	25J	1 5m			280			Si	S17x
99#	S4EN310	400 %	330	125B	1 7k	20m		160B†	90	400			50m	125B	400			Si*	M307
100#	S4FN310	400 %	330	125B	1 7k	20m		160B†	90	400			50m	125B	400			Si*	M357c
101#	S4GN310	400 %	330	125B	1 7k	20m		160B†	90	400			50m	125B	400			Si*	M357a
102#	S4HN310	400 %	330	125B	1 7k	20m		160B†	90	400			50m	125B	400			Si*	M366a
103#	S4EN300	400 %	340	125B	2 0k	20m		160B	900m	340			50m	125	400			Si*	M307
104▼#	S4HN300	400 %	340	125B	7 2k	10m		160B	900m	340			50m	125	400			Si*	M307
105#	DS250-04L	400	350		6 0k	10m		150	1.20										
106#	S4EN350	400 %	370	125B	2 0k	20m		160B†	90	400			50m	125B	400			Si*	M307
107#	S4FN350	400 %	370	125B	2 0k	20m		160B†	90	400			50m	125B	400			Si*	M357c
108#	S4GN350	400 %	370	125B	2 0k	20m		160B†	90	400			50m	125B	400			Si*	M357a
109♦#	S4HN350	400 %	370	125B	7 8k	10m		160B†	900m	400			50m	125B	400			Si*	M366a
110	A396D	400	400	70C	3 3k	8 3m		125C	1 3 Ø	400	25		16m	70C	400			Si	M377a

SYMBOLS AND CODES EXPLAINED IN INTERPRETER

5. RECTIFIERS

IN ORDER OF (1) PIV, (2) MAX AVG FWD CURRENT (3) TEMPERATURE, and (4) TYPE No.

LINE No	4 TYPE No	1 PIV (V)	MAX AVG FWD DC CURRENT 2 Io (A)	3 at TEMP (°C)	MAX RATINGS @ 25°C SURGE CUR. PEAK 1 Cy (A)	PULSE WIDTH (s)	DISS. (W)	MAX TEMP (°C)	MAXIMUM FORWARD VOLTAGE DROP Vf (V)	at If (A)	at TEMP (°C)	MAX. REVERSE CURRENT Ir @25°C & Vr (A)	Ir at T & Vr (A)	TEMP T (°C)	TEST VOLT Vr (V)	AVALANCHE RATINGS MAX V BKDN. (V)	MIN SLOPE (A/V)	DESCRIPTION MAT.	DWG No.
1#	D250-400	400	400	80C	5 5k§	10m		150J	1.10	220	25J	5.0m		25J	400			Si	M486%
2	1N1481	400	400	120C	8 0k			190J	1 1	520	25C		75m	25C	400			Si	M56b
3	1N3589	400	400	120C				190J	1 1	520	25C		75m	25C	400			Si	S83a△
4	A390D	400	400	145	4 5k			200J	40	400	130C		16m	130C	400			Si△	M377a
5	MR1247FB	400	400	150C	8 0k	8 3m		190J	40 Ø	400	150C		50m	150C	400			Si	M227b⊘
6	MR1247FL	400	400	150C	8 0k	8.3m		190J	40 Ø	400	150C		50m	150C	400			Si	M228a⊘
7	MR1247SB	400	400	150C	8 0k	8.3m		190J	.40 Ø	400	150C		50m	150C	400			Si	S199c⊘
8	MR1247SL	400	400	150C	8 0k	8.3m		190J	40 Ø	400	150C		50m	150C	400			Si	S87d⊘
9▼#	YSD211P4K38	400	410	105B	6 6k	10m		185J	1 21	1.0k	150J		28m	185J	400			Si	S365
10#	SSiN9920	400	450	100C	11k	10m		150J	1 25	1.4k	25J		50m	150J				Si△*	M573
11	450E40	400	450	150C	12k	4 0m		190J	1 1	450	25C		75m	25C	400			Si	S83a△⊘
12	450F40	400	450	150C	12k	4.0m		190J	1 1	450	25C		75m	25C	400			Si	M56b△⊘
13	783H	400	485	130C	5 0k	8 3m		190J	1 9	400	130C		10m⊘	130C	400			Si	
14#	S4GR311	400	490	100B	7 5k			175J	670mØ	490			25m		400			Si△	M522
15#	S4HR311	400	490	100B	7 5k			175J	670mØ	490			25m		400			Si△	M523
16#	D300-400	400	500	80C	5 5k§	10m		150J	1.20	400	25J	5.0m		25J	400			Si	M486a%
17	500UDF40A	400 †	500	130C	9.0k§	8.3m		200J	1 35 †	500 †	130C		30m	130C	400			Si	M448$
18	A295D	400	500	130C	7 0k	8.3m		200J					15mØ	130C				Si	S132a
19	A296D	400	500	130C	7 0k	8 3m		200J					15mØ	130C				Si	S247
20	784H	400	650	150C	8 0k	8 3m		190J	1 3	500	150C		10m⊘		400			Si	
21	MR1267	400	650	150C	12k	8.3m		190J	40 Ø	650	150C		100m	150C	400			Si	M228c⊘
22#	D450-400	400	700	85C	10k§	10m		150J	1 10	500	25J	6.0m		25J	400			Si	M486b%
23#	S4BR502	400	750	100B	11k	10m	900	165J	625mØ	700			20m	100B	300			Si△	M429
24	MR2084HA	400 †	750	150C	12k	8.3m		150A	50 Ø	750	150C	4.0m	80m	150C	400			Si△	M228c#⊘
25#	S4BR501	400	830	100B	16k	10m	850	165J	470mØ	800			20m	100B	400			Si△	M429⊘
26	A540D	400	1 0k		10k			200J	1.08		150C		50m	200J	500			Si△	M463
27	MR1297	400 $	1000	150C	18k	8.3m		190C	.40 Ø	1k	150C		200m	150C	280			Si△	M306†
28	MR2104HA	400 †	1100	150C	18k	8 3m		150A	50 Ø	1.1k	150C	5 0m	100m	150C	400			Si△	M427#⊘
29	A570D	400	1 5k	75C	15k	8.3m		200J	400mØ		130C		50m	200J	400			Si	M463
30	LA600	420	.75	50A	35			150C	1 0	.75	25A	2 0u				699			A1ew
31	LAA600	420	1 0	50A	50			150C	.90	1.0	25A	2.0u				699			A1bc
32	LAB600	420	2 0	50A	80			150C	1.0	2.0	25A	15u				699			A1bc
33	LAC600	420	3 0	25A	300			150C	1.0	3.0	25A	45u				699			A1ey
34#	B4Y5-420M	420	5 0	25A	20 †			150J										Si	C113
35#	B4Y20-420M	420	20	25A	80 †			150S										Si	M479a
36	S232	425	.75	25$	15				1.3	1 2	25	100u			425			Si	A54
37	1N5206	440	2 0	25A	25			175A	1.1	2 0	25A	3.0u	10m	100A	400			Si	A146d
38	1N5207	440	4 0	25A	100			175A	1 25	4 0	25A	5 0u	10m	100A	400			Si	A146e
39#	1S206	450	10	25	40	1		150	1.2	10	25A	10u		25A	400			Si*	A1ce
40#	BY139	450	165	50A	4 5 §	10m		85A	1 2	52	25A	2 0u	13m	85A	450			Si△	C42j
41#	1S209/2SJ4A	450	40	25	1 5	1		150	1 2	.50	25A	20u		25A	400			Si△	A164
42	ED3004	450 *	50	50	20	8.3m	1.0	100A	1.5 △	1.0	25	10u	.03m	100	400			Si△	A1bk
43	BY114⊘	450	55	50A				70A	1 5	5.0	25	10u			450			Si△	A163
44#	BY130	450	80	50A	55 §	1 0m		125A	1 5	5 0	25A	5.0u	10m	70A	450			Si△	A3f
45#	BY33	450	1 0	50A	50			150J	1.3	2 0	25J	5.0u			450			Si△	DO13
46	ED3004B	450 *	1 0	50	30	8 3m	1 0	100A	1 1 △	1 0	25	10u	.03m	100	400			Si△	A1bk
47#	BY101△	450	1 1	50A	55 §	1 0m		160S	1 5	5.0	25A	10u	10m	75A	650			Si△	DO1
48	2045	450	16 5	25A	200		4 0 Ø	150A	60 Ø	19	25A		1.0mØ	150C	450	725		Si△	DO4△#
49	2145	450	22	120C	200			175J	.60 Ø	22	25A		1 0mØ	150C	450	725		Si△	DO4△
50	S2145	450	22	120C	200		1 Ø⊘	175J	.60 Ø	22	25A		1 0mØ	150C	450	725		Si△	DO4△
51#	SSiE1330	450	25	135C	350	10m		150J	1 1	45	25J	20u			450			Si△	S290△
52#	SSiE1430	450	25	135C	350	10m		150J	1.1	45	25J	20u			450			Si△	S290△
53#	SSiE1130	450	25	150C	350	10m		150J	1.0	40	25J	20u			450			Si△	M324a
54#	SSiE1230	450	25	150C	350	10m		150J	1.0	40	25J	20u			450			Si△	M324a
55	3145	450	30	25A	200		4 0 Ø	150A	60 Ø	34	25A		1 0mØ	150C	450	725		Si△	DO5△#
56	3245	450	33	25A	600		7 0 Ø	150A	60 Ø	45	25A		2.0mØ	150C	450	725		Si△	DO5△#
57	S3445	450	50	120C	600		2 Ø⊘	175J	.60 Ø	50	25A		2.0mØ	150C	450	725		Si△	DO5△
58	1N1685	450	50	150C	700	8.3m		165C	1.2	1.1	150C		25m	150C	450			Si	S8q
59	1N2136	450	60	100C	700 §			175C	1 4	60	115C		30m△	175C	360			Si	DO5
60	1N2136A	450	60	100C	900 §			200C	1 3	60	140C		30m△	200C	360			Si	DO5
61	4145⊘	450	92	25A	1 5k		12 Ø	150A	.60 Ø	120	25A		5.0mØ	150C	450	725		Si△	DO8△#
62	S4245	450	104	120C	1 5k		2 5 Ø⊘	175J	.60 Ø	104	25A		5.0mØ	150C	450	725		Si△	DO8△
63	S5145	450	160	120C	2 2k		3 Ø⊘	175J	.60 Ø	160	25A		10mØ	150C	450	725		Si△	DO9△
64	1N2062	450	250	100C	4.5k§			200C	1.3 †	250	135C		17m	135	360			Si	DO9
65	S5345	450	250	120C	4.0k		4 Ø⊘	175J	.60 Ø	250	25A		10mØ	150C	450	725		Si△	DO9△
66	70S45	450	250	135C	4 5k§	8 3m		200J	1.25	250 †	135C		25m⊘	135C	450			Si*	S8b2⊘
67	70T45	450	250	135C	4.5k§	8 3m		200J	1.25	250 †	135C		25m⊘	135C	450			Si*	S8b1⊘
68	JAN1N540	480 *	25	150A$	15	8.0m		150A	1 1	50	25A	10u	.35m⊘	150A	400			Si	A6d
69	JAN1N647	480	400m	25A	5.0 §	8.3m		150A	1.0 †	400m	25	25n	15u	150A	400			Si	A1dd
70	JAN1N1084	480	750m	100A	30	8 3m		150A	1 0 †	3.0	25	5.0u	500u	150C	400			Si	F76
71	JAN1N3612	480	1 0	100A	30	8.3m		175A	1.1 †	1.0	25	1 0u	300u	150A	400			Si	A1rt
72	JAN1N1615,R	480 *	10	25C	100	8 3m		150C	1 5 †	15	25	50u	.50m	150C	400			Si	DO4
73	JAN1N1188,R	480	35	150C	500	8.3m		150A	1 4 †	110	25	20u	3.0m	150C	400			Si	DO5
74#	S6BR25	480 †	40	120B	250	20m		140B	1.2	40			20m		480			Si*	S122⊘
75#	S6CR25	480 †	40	120B	250	20m		140B	1 2	40			20m		480			Si*	S123⊘
76#	S6DR25	480 †	40	120B	250	20m		140B	1 2	40			20m		480			Si*	S125⊘
77#	S6ER25	480 †	40	120B	250	20m		140B	1 2	40			20m		480			Si*	S124⊘
78#	S6BR30	480 †	44	125B	250	20m		140B	1 1	44			16m		600			Si*	S122⊘
79#	S6CR30	480 †	44	125B	250	20m		140B	1 1	44			16m		600			Si*	S123⊘
80#	S6DR30	480 †	44	125B	250	20m		140B	1.1	44			16m		600			Si*	S125⊘
81#	S6ER30	480 †	44	125B	250	20m		140B	1.1	44			16m		600			Si*	S124⊘
82	JAN1N3291,R	480	75	150C	1 6k	8 3m		200C	1.4	235	25C		30m	200C	400			Si	Z20
83#	S6AN70	480 †	77	115B	450	20m		150B	1.0	70			30m		600			Si	F19
84#	S6BR70	480 †	77	115B	450	20m		150B	1 0	70			40m		600			Si	F19
85	JAN1N3267,R	480	160	125	2 0k	8.3m		175C	1 4 †	500	25	80m	15m	150	400			Si	DO9⊘
86#	S6AN125	480 †	175	125B	1.1k	20m		150B	1 1	175			30m		600			Si	F19
87	JAN1N3168,R	480	175	150C	3 0k	8 3m		175C	1 4 †	750	25	50m	40m	175C	400			Si	DO9⊘
88#	S20N600JA	480	285	70C	4.5k	10m		150J	1 25	600	25A	5.0m	30m	150C	480			Si△	M378⊘
89#	0304	490 *	50	50A	30			150J	1 2 △	.50	25A	1.0u			400			Si*	A9h△
90#	0314	490 *	50	50A	30			150J	1 2 △	.50	25A	10u			400			Si*	A9h△
91#	0324	490 *	50	50A	30			150J	1.2 △	.50	25A	.10u			400			Si*	A9h△
92	G5H3	500		150C	1 5k			175J	1 3	200	25C		5 0m	150C	500			Si	DO8
93	1N884	500	.05	25A$	50			200S	60	.05			02m		500			Si	A1bz
94#	BYY10	500	50m	25$	5 0			125	1 0	50m	25	50u			500			Si	F9b
95	S230	500	50m	25$	15				1 2	80m	25	100u			500			Si	A54
96	P1K5	500	05	50	30			175	1 0	05	25	10u	50m	100	500			Si	M343
97	1N685	500	075	150A	3 0			175A	1 0	.20	25A		20m	150A	500			Si	DO7
98	1N873	500	10	25A$	1 0			200S	60	.10			02m		500			Si	A1bz
99	10R5B	500	10	25	60			175	2 0	.10	25	5.0u	50m	150	500			Si	
100	S205	500	10	25$	15				1 2	15	25	100u			500			Si	A54
101	P2K5	500	.10	50	30			175	1 0	10	25	10u	.50m	100	500			Si	M343
102	1N363	500	.10	100$				150C	2 0	.20	25C		250mØ	100A	500			Si	DO2
103	1N862	500	15	25A$	1.5			200S	60	15			02m		500			Si	A1bz
104	M500A	500	15	50	50	8 3m		175	1.2		25	10u						Si	A3h
105	CER500A	500	.15	75A	48	4 0m		150A	1.2	15	100	10u△	20m	100	500			Si	DO27
106	1N363A	500	15	100A$	10			150	60 Ø	25	25C	2.0u	.04m	100A	500			Si	DO2
107	1N686	500	15	150A	5.0			175A	1.0	.40	25A		20m	150A	500			Si	DO7
108	A5F2	500 †	15	200A	45			200A	1.0	.75	25	1 0u△	20m⊘	150	500			Si	A84
109	1N851	500	20	25A$	2 0			200S	.60	.20			.02m		500			Si	A1bz
110	A1F1	500	20	25	60			175A	.50		150	1 0u	.50m	150	500			Si	A84a

SYMBOLS AND CODES EXPLAINED IN INTERPRETER

5. RECTIFIERS

IN ORDER OF (1) PIV, (2) MAX AVG FWD CURRENT (3) TEMPERATURE, and (4) TYPE No.

LINE No.	4 TYPE No	1 PIV (V)	MAX AVG FWD DC CURRENT 2 Io (A)	3 at TEMP (°C)	MAX RATINGS @ 25°C SURGE CUR PEAK 1 Cy (A)	PULSE WIDTH (s)	DISS. (W)	MAX TEMP (°C)	MAXIMUM FORWARD VOLTAGE DROP Vf (V)	at If (A)	at TEMP (°C)	MAX. REVERSE CURRENT Ir @25°C & Vr (A)	Ir at T & Vr (A)	TEMP T (°C)	TEST VOLT Vr (V)	AVALANCHE RATINGS MAX V BKDN. (V)	MIN SLOPE (A/V)	MAT.	DESCRIPTION DWG. No.
1	A1F5	500	.20	25	60			175A	50		150	5.0u	.50m	150	500			Si	A84a
2	A1F9	500	20	25	60			175A	50		150	10u	.50m	150	500	100	200u	Si	A84a
3	B1F1	500	.20	25	60			175A	50		150	1 0u	50m	150	500			Si	A1rx
4	B1F5	500	20	25	60			175A	50		150	5.0u	50m	150	500			Si	A1rx
5	B1F9	500	.20	25	60			175A	.50		150	10u	.50m	150	500	100	200u	Si	A1rx
6#	BY183-500	500	200m	25A	2 0	10m		100J	1 2	100m		1 0u			500			Si△	DO7
7	PS050	500	20	25A	3 2	10m		200A	1 0	10	25A		100m⊘	100A	500			Si	A60p
8	K1F5	500	20	50	60			150C	2 0	20	25	5 0u	.50m	100C	500			Si	
9	P3K5	500	20	50	30			175	1 0	.20	25	10u	50m	100	500			Si	M343
10	AM53	500	20	100C$	8 0 §	8 0m		125A	1.25	.20	25C		30m⊘	100C	500			Si	DO4
11	S107	500	20	100$	15				1 2	30	25	100u			500			Si	A54
12	1N3080	500	.20	150A$				175J	1.5	.50	25		50m	150	500			Si	A84
13	CODI555	500	25	25$	20			100	1.1	40	25	10u			500			Si	A52g
14	S19A	500	25	25A$	15				1.2	40	25	1 5m			500			Si	A54
15	M500B	500	25	50	50	8 3m		175	1 2		25	10u						Si	A3h
16	CER500B	500	25	75A	48	4 0m		150A	1.2	25	100	10u△	20m	100	500			Si	DO27
17	1N320	500	.25	100$				200	2 0	40	25C		300m⊘	100A	500			Si	DO2
18	1N320A	500	25	100$	10			200	60 ⊘	40	25C	2 0u⊘	40u⊘	100A	500			Si	DO2
19	1N534	500	30	25A$	3 0	3 0m		150A	2 0	30	25A	17 m			500			Si	DO3
20	1N1706	500	30	50A	8 0			125A	1 7	1 0	25A		30m⊘	100A	500			Si	A53
21	P4K5	500	.30	50	30			175	1.0	30	25	10u	.50m	100	500			Si	M343
22	1N444	500 †	30	100A	15			150A	1 5	30	25	1 7m			500			Si	DO2
23	1N605	500	30	100A	2 0	100m		170S	1.5	20	25	25u△			500			Si	DO1
24	1N605A	500	30	100A	2 0	100m		170S	1 5	40	25	2 0u△			500			Si	DO1
25	1N1256	500	.32	25A	15			165A	1 0 ⊘	32	25A		.50m	125A	500			Si	A53
26	1N648	500	40	25A	3 0	15m	60	150A	1 0	40	25	20u	02m	100	500			Si△	A1
27	AM450	500	40	25A				150A	1 2	.40	25A		30m⊘	150A	500			Si	DO7
28#	BYX60-500	500	400m	25A	2 5	1 0	600m	125A	1 2	400m	25A	500n	50u	100A	500			Si△	DO7
29	PS450	500	40	25A	3 3	10m		200A	1 5	.50	25A		.50m⊘	150A	500			Si	A60p
30	K2F5	500	40	50	60			150C	2 0	40	25	5 0u	.50m	100C	500			Si	
31	P5K5	500	40	50	30			175	1 0	40	25	10u	50m	100	500			Si	M343
32	1N327	500	.40	100$				200	2 0	65	25C		300u⊘	100A	500			Si	DO2
33	1N327A	500	40	100$	10			200	60 ⊘	65	25C	2 0u	40u	100A	500			Si	DO2
34	AM52	500 †	40	100C$	10 §	8 0m		125A	1.25	40	25C		30m⊘	150C	500			Si	DO4
35#	SG505	500	45	50	10			150A	1 1	50	25A	50u	30m	150A	500			Si△	C42
36	A2F4	500	475	25	40	8 3m		175	1 2	50	25	1 0u	50m	150	500			Si	A84
37	1N2085	500	500m	25$	15			150A	750m⊘	500m	25	350u⊘			500			Si	A53
38	1N3184	500	50	25A	4 0	1		150A	1 0	.25	25	30u	02m	100	500			Si	M82
39	1N3229	500	50	25$	12				3 3	50			500u	150	500			Si	A1cs
40	CODI5554	500	50	25$	20			100	1 1	40	25	10u			500			Si	M45
41	MB265	500	50	25	10	8 3m	2 0	175A	1 0	2 ⊘	25	1 0u	06m	100	500			Si	A60f
42	MT050	500	50	25A	10		50	175A	1.0	50 ⊘	25A	200n	15u	150A	500			Si	A60e
43	MT050A	500	50	25A	10		50	175A	1 0	50 ⊘	25A	25n	5 0u	150A	500			Si	A60e
44	S15⊘	500	50	25	15				1 2	80	25	15u			500			Si	A54
45	S18A	500	50	25A$	15				1 2	80	25	50u			500			Si	A54
46	PS150	500	.50	30A	3 3			200A	1 5	50	25A		50m⊘	150A	500			Si	A47
47	5E5	500	500m	50	50 §			175	1 1	500m	50	2 0u	50u	100	550			Si△	DO27
48	5J5	500	500m	50	50 §			175	1 1	500m	50	2 0u	50u	100	550			Si△	DO15
49#	50AS	500	50	50A	15			100A	1 15	50	25A	10u			500			Si△	DO3
50	M500C	500	50	50	50	8.3m		175	1 2		25	10u						Si	A3h
51	P6K5	500	50	50	30			175	1 0	50	25	10u	50m	100	500			Si	M343
52	1N1712	500	50	55A	10			125A	1 3	1 0	25A		40m⊘	150A	500			Si	A53
53#	1S315	500	50	70	25	10m		150	1 1	1 0	25	10u		25	500			Si	TO1
54#	1S1231	500	50	70	35	10m		150	1 1	1 0	25	10u		25	500			Si	DO1
55	1N1764	500	50	75A	35			100A	3 0	50	25	100u	1 0m	100	500			Si△	A53
56	CER500C	500	50	75A	48	4 0m		150A	1 2	50	100	10u△	20m	100	500			Si	DO27
57	S18	500	50	80	15				1 2	80	25	100u			500			Si	A54
58	1T505	500 †	50 ⊘	85A	35			100A	1 2	30	25	10u	25m	100	500			Si	A3x
59	2T505	500 †	50 ⊘	85A	35			100A	1 2	30	25	10u	25m	100	500			Si	DO1
60	3T505	500 †	.50 ⊘	85A	35			100A	1.2	.30	25	10u	25m	100	500			Si	DO13
61	4T505	500 †	50 ⊘	85A	35			100A	1 2	30	25	10u	25m	100	500			Si	DO7
62	ERD500	500 †	50 ⊘	85	35			100A	1 2	30	25	10u	25m	100	500			Si	M166
63	1N554	500 †	.50	100A	4 0	3 0m		150A	1 5	50	25A	3 5u			500			Si	DO4
64#	1S558	500	.50	100A	15			150A	1 1	50	25	50u			500			Si△	C42
65	50M	500	50	100A	30	4 0m		150	1 5			2 0m			500			Si	F22
66	50S5	500	50	100				175J	1 3	1 8	25C		2 0m	25C	500			Si	S41b
67	EG100H	500	50	100	50			125A	1 0	50	25	10m			500			Si	DO29
68	S255	500	50	100$	60				1 2	80	25		500u	100	500			Si	A54
69	S95	500	55	50$	15				1 2	90	25		650u	100	500			Si	A54
70	1N3548	500	60	25A	15			200A	1 0	50	25A	20u	75m	175A	500			Si	A1
71	A2F1	500	60	25	60			175A	50		150	1 0u	50m	150	500			Si	A84a
72	A2F5	500	60	25	60			175A	50		150	5.0u	50m	150	500			Si	A84a
73	A2F9	500	60	25	60			175A	50		150	10u	500u	150	500	100	200	Si	A84a
74	B2F1	500	60	25	60			175A	50		150	1 0u	50m	150	500			Si	A1rx
75	B2F5	500	60	25	60			175A	50		150	5.0u	50m	150	500			Si	A1rx
76	B2F9	500	60	25	60			175A	.50		150	10u	50m	150	500	100	200u	Si	A1rx
77	ER51	500	60	25A	15			150A	1 25	50	25		75u	100	500			Si	A3t
78#	S6M2	500	60	25A	8 0		7 3	125				1 0u	05m	125J	500			Si△	DO14
79	S18B	500	60	25A$	15				1 2	95	25	100u			500			Si	A54
80	TM53	500	60	25C				125C	2 0	20	25		.30m⊘	100C	500			Si	S145
81	1N1696	500 †	60	50A	20			115A	60	25	100A		50m⊘	100A	500			Si	DO3
82#	1S150	500	60	50A	20			120S	1 2	60	25A	30u	25m	100A	500			Si△	A50
83	K3F5	500	60	50	60			150C	2 0	60	25	5.0u	50m	100C	500			Si	
84	P7K5	500	60	50	30			175	1 0	.60	25	10u	50m	100	500			Si	M343
85	SD95	500	60	50A	10			125A	1 5	90	25		65m	100	500			Si	DO3
86	SM250	500	60	50$	20			150	1.2	95	25	10u			500			Si	A84
87#	1HY50	500	60 ⊘	75A	40	10m		150S	1.15	60	25A							Si△	DO3
88	CY50	500	60 ⊘	75A	40	10m		150	1 15	.60	75A				500			Si△	A31j
89	5MA5	500	625	100	50			140J	92	63	25		20m	100	500			Si	F29
90	1N1491	500 †	75	25A	15			120A	55 ⊘	25	125A		30m⊘	125A	500			Si*	DO3
91	1N2079	500	75	25A$									25m	100A	500			Si	A53
92	1N2108	500 ⊘	75	25$				200	1 2	75	25	300u			500			Si△	A53
93	75R5B	500	75	25	60			175	2.0	75	25	5 0u	50m	150	500			Si	
94	A3F1	500	75	25	60			175A	50		150	1 0u	50m	150	500			Si	A84a
95	A3F5	500	75	25	60			175A	50		150	5 0u	50m	150	500			Si	A84a
96	A3F9	500	75	25	60			175A	50		150	10u	.50m	150	500	100	200u	Si	A84a
97	B3F1	500	75	25	60			175A	.50		150	1 0u	50m	150	500			Si	A1rx
98	B3F5	500	.75	25	60			175A	50		150	5.0u	50m	150	500			Si	A1rx
99	B3F9	500	75	25	60			175A	.50		150	10u	.50m	150	500	100	200u	Si	A1rx
100	CODI535	500	75	25$	35			150	1 1	80	25	1 0u			500			Si	A52g
101	CODI615	500	75	25$	35			150	1 1	80	25	1 0u			500			Si	A9j
102	DI55	500	.75	25$	25			100	1 1	75	25	10u			500			Si	A1cm
103	MB255	500	75	25	15	8.3m	2 0	175A	1 0	40 ⊘	25	200n	15u	100	500			Si	A60f
104	MB266	500	75	25	15	8 3m	2 0	175A	1 0	4 ⊘	25	1 0u	06m	100	500			Si	A60f
105	MB274	500	75	25	15	8 3m	2 0	175A	1 2	50 ⊘	25	2.0u	75u	100	500			Si	A60f
106	PT550	500	75	25A	15	8.0m		125A	1.5	50	25A		.50m⊘	100A	500			Si	DO2
107	UT117	500	.75	25A	15	8.3m	1 0		1.2	50 ⊘	25A	2 0u	75u	100A	500			Si	A146f
108	UT214	500	75	25A	15		1 0	175A	1 0	40	25	200n	15u	100A	500			Si	A146f
109	XS18	500	75	25	15							100u			500			Si	A54
110	1N444B	500 †	75	35A	15			165A	1 5	75	25A	1 7u	200m	150A	500			Si△	DO3

SYMBOLS AND CODES EXPLAINED IN INTERPRETER

5. RECTIFIERS

IN ORDER OF (1) PIV, (2) MAX AVG FWD CURRENT (3) TEMPERATURE, and (4) TYPE No.

LINE No	4 TYPE No.	1 PIV (V)	MAX AVG FWD DC CURRENT 2 Io (A)	3 at TEMP (°C)	MAX RATINGS @ 25°C SURGE CUR PEAK 1 Cy (A)	PULSE WIDTH (s)	DISS (W)	MAX. TEMP (°C)	MAXIMUM FORWARD VOLTAGE DROP Vf (V)	at If (A)	at TEMP (°C)	MAX. REVERSE CURRENT Ir @25°C & Vr (A)	Ir at T & Vr (A)	TEMP T (°C)	TEST VOLT Vr (V)	AVALANCHE RATINGS MAX V BKDN. (V)	MIN SLOPE (A/V)	DESCRIPTION MAT.	DWG No.
1	1N1095	500	75	35A	15			165A	50 ∅	25	150A		30m∅	150A	500			Si	DO3
2	7E5	500	750m	50	60 §			175	1 1	750m	25	2.0u	50u	100	550			Si△	DO27
3	7J5	500	750m	50	60 §			175	1 1	750m	25	2 0u	50u	100	550			Si△	DO15
4	1N1652	500 †	75	50A	15			165A	.50 ∅	25	150A		30m∅	150A	500			Si	A53
5	1N2095	500 †	75	50A	15			100A	.50 ∅	50	85A		.25m∅	85A	500			Si△	M21
6	1N2614	500	75	50A	30			175A	1 1	50	25A	10u	50m	150A	500			Si	A31a
7	1N4368	500	75	50A	35	2 0m		175	1 1	75	25	1 0u	30m	175	500			Si	DO3
8#	1S44∅	500	75	50A	25			150J	1 2	1.0	25A	5 0u	35m	150A	500			Si△	DO1
9#	5G8	500	75	50A	15			150A	1 1	75	25A	1 7u			500			Si△	DO3
10	A3F3	500 †	75	50A	35			175A	1 1	50	25	10u△	30m∅	150	500			Si	A84
11	A500	500	75	50	15		1 0	100	1 0	75	25	5 0u			500			Si	A3p
12	CER500F	500	75	50A	50	8 0m		175A	1 2	75	25	10u			500			Si	F29
13	D500	500	75	50	15		1 0	175	1 0	75	25	5 0u			500			Si	A50
14	DK755	500	750m	50A	60			175A	1 2	750m	25A	10u	100u	100	500			Si	DO27
15	H500	500	75	50	15		1 0	175	1 0	75	25	5.0u			500			Si	DO3
16	M500	500	75	50	50	8.3m		175	1 2		25	10u						Si	A3h
17	SD95A	500	75	50A	15			125A	1 3	1 2	25		30m	100	500			Si	DO3
18	SM50	500	75	50$	35			175†	1.1	.50	25	10u			500			Si	A84
19	TK50	500	75	50A	15			175C	1 1	50	25		300u∅	150	500			Si	A84
20	1N2488	500	75	55A	75	4 0m		150	1 0			1 0m			500			Si	A6b
21	1N2863	500	750m	75A	16			125A	1 2	500m	75A		300u∅	100A	500			Si	DO1
22	CER500	500	75	75A	48	4 0m		150A	1 2	.75	100	10u△	20m	100	500			Si	DO27
23	DI648	500	75	75A	25			150A	1 2	1 2	25	200n	15u	100	500			Si	A1bn
24	S85	500	75	80$	15				1 2	1.2	25	20u			500			Si	A54
25	1N1560	500	75	100C				150	1.4	60	25		1 0m	100A	500			Si	DO2
26	AM050	500	75	150A				150A	1 0	03	25A		30m∅	150A	500			Si	DO7
27	1N1104	500	77	55A	15	8 0m		175A	1 5	12	25A		30m	150A	500			Si	DO1
28	1N1486	500	78	50A	20			150J	50 ∅				3 5m	100A	500			Si	A34a
29	PE405	500	80	35A$	50			135A	1 1	80	25	10u	.20m∅	85A	500			Si	A3w
30#	SR1FM10	500	800m	40A	50			130J	1 2 †§	3.0	25A	10u	300u	130J	500				A1bv
31	K4F5	500	80	50	60			150C	2 0	80	25	5 0u	.50m	100C	50			Si	
32▼#	S15	500	800m	60A	15	10m		140J	1 5	1 0	25A	10u			500			Si	A268a
33	1N613	500	80	100A	3 0	8 3m		150A	1 5	.20	25A	25u△			500			Si	DO4
34	1N613A	500	80	100A	3 0	8 3m		150A	1 5	40	25A	2 0u△			500			Si	DO4
35	A4F1	500	85	25	60			175A	.50		150	1 0u	50m	150	500			Si	A84a
36	A4F5	500	85	25	60			175A	50		150	5 0u	50m	150	500			Si	A84a
37	A4F9	500	85	25	60			175A	50		150	10u	50m	150	500	100	200u	Si	A84a
38	B4F1	500	85	25	60			175A	50		150	1.0u	50m	150	500			Si	A1rx
39	B4F5	500	85	25	60			175A	.50		150	5 0u	.50m	150	500			Si	A1rx
40	B4F9	500	85	25	60			175A	50		150	10u	.50m	150	500	100	200u	Si	A1rx
41	SM150	500	85	50$	45			150	1 0	1 5	25	10u			500			Si	A84
42	SM750	500	85	50	35			125A	1 0	50	25	01u	.20m	150	500			Si	A84
43	TM56	500	95	35C				175A	2 0	20	25		.50m∅	150	500			Si	DO4
44	NS1005	500	1 0		60	8 3m			1 2	1 0		10u			500				
45	1N2268	500	1 0	25$	20			150	60	1 0	25		350u	150	500			Si△	DO4
46	1N2269	500	1 0	25$	20			150	600m	1 0	25		350u	150	500			Si△	S35
47	100R5B	500	1 0	25	60			175	2 0	1.0	25	5 0u	.50m	150	500			Si	
48	A5F1	500	1 0	25	60			175A	.50		150	1.0u	50m	150	500			Si	A84a
49	A5F5	500	1 0	25	60			175A	50		150	5 0u	50m	150	500			Si	A84a
50	A5F9	500	1 0	25	60			175A	50		150	10u	50m	150	500	100	200u	Si	A84a
51	B5F1	500	1 0	25	60			175A	50		150	1.0u	.50m	150	500			Si	A1rx
52	B5F5	500	1 0	25	60			175A	50		150	5 0u	50m	150	500			Si	A1rx
53	B5F9	500	1 0	25	60			175A	50		150	10u	50m	150	500	100	200u	Si	A1rx
54	MB248	500	1 0	25	20	8 3m	2 0	175A	1.0	60 ∅	25	1 0u	75u	100	500			Si	A60f
55	S1050	500	1 0	25A	35			175A	50 ∅	25	150A		50m∅	150A	500	800		Si△	A1gf
56	SLA16AB	500	1 0	25	60	8 3m		150A	1 0	1 0	25	1.0u	10m	100	500			Si	A69
57	SLA16C	500	1 0	25	60	8 3m		150A	1 1	1 0	25	5 0u	.25m	100	500			Si	A69
58	UT237	500	1 0	25A	20	8.3m	4 0	175A	1 0	40 ∅	25A	2 0u	75u	100A	500			Si	A60
59#	ZR15	500	1 0	25A	80	10m		150A	1 0	1 5	25A	5.0u	20m	100A	500			Si	A6a
60#	ZR15T	500	1.0	25A	80	10m		150A	1 0	1 5	25A	5 0u	20m	100A	500			Si	S164
61#	SJ403H	500	1 0	30A	32	10m		150J	1 0	750m	25A	10u	50u	120A	500			Si△	A31n
62	10C5	500 †	1 0	50A				175A	1 2 △	1.0	25A	10u						Si	A50
63	AA500	500	1 0	50	15		1 0	100	90	1 0	25	5 0u			500			Si	A3p
64	CJ5	500	1 0	50	50			150	1 1	1 0	50	5.0u	200u	100	550			Si△	DO15
65	CL5△	500	1 0	50A	50			150A	1 1	1 0	50A	5 0u	200u	100A	550			Si△	DO27
66	CM5	500	1 0	50	50			150	1 1	1 0	50	5 0u	200u	100	550			Si△	DO27
67	E5	500	1 0	50	75 §			175	1 1	1 0	25	2 0u	50u	100	550			Si△	DO27
68	EM5	500	1 0	50	75 §			175	1 1	1.0	25	2.0u	50u	100	550			Si△	DO41
69♦#	F14E	500	1 0	50A	45			175J	1 0	1 0	25	50u	300u	100	500			Si	A249a
70	HA500	500	1 0	50	15		1 0	175	90	1 0	25	5 0u			500			Si	DO3
71	J5	500	1 0	50	75 §			175	1 1	1.0	25	2 0u	50u	100	550			Si△	DO15
72	K5F5	500	1 0	50	60			150C	2 0	1 0	25	5.0u	.50m	100C	500			Si	
73	TA500	500	1 0	50	15		1 0	100	90	1 0	25	5 0u			500			Si	M21
74	SCA5	500	1 0	55$	50			175	1.2	1.0	25	1 0u	50m	125	500	720		Si	A1bs
75	SEN150	500	1 0	55	50	8 3m		170A	1 0	1.0	25	5 0u	300u	150	500			Si△	DO15
76#	SH4D5	500 ∅	1 0	55A	45	8 3m		115	60 ∅	50	85		40m∅	85	350			Si	M215
77#	BY127/500	500	1 0	60A	40	10		150J	1 5	5 0	25J	10u			750			Si	DO27
78	1N1764A	500 †	1 0	75A	40			135	1 2	1 0	75A		.50m	135	500			Si	DO1
79	1N2863A	500 †	1 0	75A	40			135	1 2	1 0	75A		50m	135	500			Si	DO1
80	5A5	500	1 0	75A	50	8 3m			.95	1 0	25A	10u						Si	DO27
81	10D5	500	1 0	75A	50	8 3m			95	1 0	25A	10						Si	DO39
82	CA102KA	500	1 0	75A	15			150A	1 2	1 0	25C		3 0m∅	125C	500			Si	A32
83	CC102KA	500	1 0	75A	15			150A	1 2	1 0	25C		3 0m∅	125C	500			Si	C8
84	CF102KA	500	1 0	75A	1.5			150A	1 2	1 0	25C		3 0m∅	125C	500			Si	F8
85	CP102KA	500	1 0	75A	15			150A	1 2	1 0	25C		3 0m∅	125C	500			Si	C9
86	1N1555	500	1 0	100C				150	1 4	60	25		1 0m	100A	500			Si	DO4
87	AM51	500 †	1.0	100C$	20 §	8 0m		125A	1 25	1.0	25C		30m∅	100C	500			Si	DO4
88	DSR1205	500	1 0	100					1.1	1.0		100n							A266
89	SI500E	500	1 0	100A	50			150C	1 0	1 0	25A	5 0u			500			Si	DO27
90#	SM51	500	1 0	100$	45			200A	1 0	1 2	25	1 0u			500			Si	A84
91	SM515	500	1 0	100$	45			150†	1 0	1.0	25	10u			500			Si	A84
92	1N2030	500 †	1 0	150C	25	8 3m		175C	2.0	2 0	25		.50m	150C	500			Si	DO4
93	AM54	500	1 0	150C$	20 §	8 0m		175A	1 25	1 0	25C		.50m	150C	500			Si	DO4
94	BY106	500	1 0	150C$	25			150C	90	1 0	25C	4.0u	50m	150C	500			Si	DO2
95	BY116	500	1 0	150C$	25			150C	80	1 0	25C	1 0u	10m	150C	500			Si	DO2
96	BY126	500	1 0	150C$	25			150C	1 0	1.0	25	10u	1 0m	150C	500			Si	DO2
97	E1H3	500	1 0	150	200			175	1 3	1 0	150	10u	1 0m	150	500			Si	DO4
98	HC500F	500	1 1	50A	50	8 0m		175A	1.2	1 1	25	10u			500			Si	F29
99	MH500	500	1 1	50	50	8 3m		175	1 2		25	10u						Si	A3h
100	HC500△	500	1 1	75A	75	4 0m		150A	1 2	1.1	100	10u△	20m	100	500			Si	DO27
101	A6F1	500	1 2	25	60			175A	50		150	1 0u	.50m	150	500			Si	A84a
102	A6F5	500	1 2	25	60			175A	50		150	5 0u	.50m	150	500			Si	A84a
103	A6F9	500	1 2	25	60			175A	50		150	10u	50m	150	500	100	200u	Si	A84a
104	B6F1	500	1 2	25	60			175A	50		150	1.0u	50m	150	500			Si	A1rx
105	B6F5	500	1 2	25	60			175A	50		150	5 0u	50m	150	500			Si	A1rx
106	B6F9	500	1 2	25	60			175A	50		150	10u	50m	150	500	100	200u	Si	A1rx
107	K6F5	500	1 2	50	60			150C	2 0	1 2	25	5 0u	.50m	100C	500			Si	
108	TM52	500	1 25	25C				125C	2 0	.80	25		.30m∅	100C	500			Si	S145
109	UT245	500	1 25	25A	20	8 3m	4 0	175A	1 0	50 ∅	25A	2 0u	75u	100A	500			Si	A60
110	TM55	500	1 25	35C				175C	2 0	80	25		50m	150	500			Si	S145

SYMBOLS AND CODES EXPLAINED IN INTERPRETER

5. RECTIFIERS

IN ORDER OF (1) PIV, (2) MAX AVG FWD CURRENT (3) TEMPERATURE, and (4) TYPE No.

LINE No	4 TYPE No.	1 PIV (V)	MAX AVG FWD DC CURRENT 2 Io (A)	3 at TEMP (°C)	MAX RATINGS @ 25°C SURGE CUR PEAK 1 Cy (A)	PULSE WIDTH (s)	DISS. (W)	MAX. TEMP (°C)	MAXIMUM FORWARD VOLTAGE DROP Vf (V)	at If (A)	at TEMP (°C)	MAX. REVERSE CURRENT Ir @25°C & Vr (A)	Ir at T & Vr (A)	TEMP T (°C)	TEST VOLT Vr (V)	AVALANCHE RATINGS MAX V BKDN. (V)	MIN SLOPE (A/V)	DESCRIPTION MAT.	DWG. No.
1	RA132KA	500	1 3	55A$	60			150A	1 2	1 3	25		.30mØ	150	500			Si	A34
2	1N1912	500 Ø	1 5	25A	30	16m	2 0	250	1.0	1 0	25	10u			500			SiΔ	A86
3	1N2218	500	1 5	25$	20			150	60	1 5	25		500u	150	500			SiΔ	DO4
4	1N2219	500	1 5	25$	20			150	60	1 5	25		500u	150	500			SiΔ	S35
5#	1S155	500	1 5	25A	15			125	1.3 Δ	1 0		5 0uΔ			500			Si*	S42
6	150R5B	500	1 5	25	60			175	2 0	1 5	25	5 0u	.50m	150	500			Si	
7	A7F1	500	1 5	25	60			175A	.50		150	1 0u	50m	150	500			Si	A84a
8	A7F5	500	1 5	25	60			175A	.50		150	5 0u	50m	150	500			Si	A84a
9	A7F9	500	1 5	25	60			175A	50		150	10u	50m	150	500	100	200u	Si	A84a
10	A168-5†	500	1 5	25	50	8 0m		125	1 1	1.0	25	5 0u			550			Si	M575
11	B7F1	500	1 5	25	60			175A	50		150	1 0u	50m	150	500			Si	A1rx
12	B7F5	500	1 5	25	60			175A	50		150	5 0u	50m	150	500			Si	A1rx
13	B7F9	500	1 5	25	60			175A	50		150	10u	50m	150	500	100	200u	Si	A1rx
14	CODI5354	500	1 5	25$	35			150	1 1	80	25	1 0u			500			Si	M45
15	M1F1	500	1 5	25	250			175A	50		150	2 0u	5 0m	150	500			Si	A1ep
16	M1F5	500	1 5	25	250			175A	50		150	10u	5.0m	150	500			Si	A1ep
17	M1F9	500	1 5	25	250			175A	.50		150	10u	5.0m	150	500	100	200u	Si	A1ep
18	MB240	500	1 5	25	25	8.3m	2 0	175A	1 0	80 ⧄	25	200n	15u	100	500			Si	A60f
19#	SA5M1	500	1 5	25A	47		2 0	150A	2.0	10	25J	10u	300u	150J	500	625 Ø		SiΔ	DO27
20	SI5	500	1 5	25A	80			150C	1 0	1 5	25A	1 0u			500			Si	A1bc
21	UT255	500	1 5	25A	25	8 3m	1 0	175A	1.0	75 ⧄	25A	2 0u	75u	100A	500			Si	A60
22	1N4821	500 †	1 5	40	50			170	1 3	1 5	40		25m	40	500			Si	DO27
23#	S2A50	500	1 5	40A	80	10m		150J	1 05 Δ	1 5	25A		.32m	25A	500			SiΔ	A56
24#	S6CN1	500	1 5	40A	45		1 7	150A				10u	25m	150J	500			SiΔ	A31n
25#	S6M1	500	1 5	40A	47		2 0	170A				10u	300u	150	500			SiΔ	DO27
26	1N2851	500 †	1 5	50C	15			150A	65 Ø	50	150C		.30mØ	150C	500			Si*	S35
27	1 5E5	500	1 5	50A	75 §			175A	1 1	1 5	25A	2 0u	50u	100	550			SiΔ	DO27
28	1.5J5	500	1 5	50	75 §			175	1 1	1 5	25A	2 0u	50u	100	550			SiΔ	DO15
29	A14E	500	1 5	50	50			175J	1 0	1 0	25J	5 0u			500			Si	A94g
30	K7F5	500	1 5	50	60			150C	2 0	1.5	25	5 0u	50m	100	500			Si	
31	1N1567	500	1 5	55C	70	8 3m		175A	1 2	50	25A	5 0u	50m	100A	500			SiΔ	C12
32	1N2395	500	1 5	55A	35			150A	1 2	1 5	25		30mØ	150A	500			Si	A32
33	1N2404	500	1 5	55A	35			150A	1 2	1 5	25		30mØ	150A	500			Si	C8
34	1N2413	500	1 5	55A	35			150A	1 2	1 5	25		30mØ	150A	500			Si	C9
35	1N2422	500	1 5	55A	35			150A	1 2	1 5	25		30m	150A	500			SiΔ	F8
36▼#	SB2	500	1 5	60A	100	10m		150J	930m	1 5	25A	10u			500			Si	A268
37	1N1119	500 †	1 5	70C$	15			155A	65 Ø	1 5	150		30mØ	150	500			Si	DO4
38	1N5396	500	1 5	70C	50 §			170C	1 4	1 5	70C		30m	150	500			Si	DO15
39▼	CTN500	500	1 5	75	50			175A	1 0			10u			500			Si	M594*
40▼	CTP500	500	1 5	75	50			175A	1 0			10u			500			Si	M594a*
41▼	VB500	500	1 5	75	50			175A	1 0			10u			500			Si	M594b*
42	50F1	500	1 5	100				175J	1 0	2 4	25C		10m	25C	500			Si	S41a
43	50J1	500	1 5	100A	100			150C	85	1 5	25A	2 5m			500			Si	A52
44	1N1233B	500	1 6	50$	30				1 2	1 0	25	10u	300u	150	500			Si	S25a
45	S1250	500	1 6	120C	35		15 Ø⧄	175J	1 0 Ø	1 0	25A		10mØ	100C	500	1 8k		SiΔ	DO13Δ
46	1N1223	500	1 6	135C	20			175J	1 5	2 5	25J	500u	1 5m	150J	500			Si	DO1
47	1N1233	500	1 6	135C	20			175J	1 5	2 5	25J	500u	1 5m	150J	500			Si	S25
48	1N1223B	500 †	1 6	140C	25			175$	1 7	1 3	25	300uØ	10 Δ	25	500			Si	DO1
49	1N1233A	500	1 6	140C	20			175J	1 5	2 5	25J	50u	50m	150J	500			Si	S25
50	1N1543	500	1 6	140C	20			175J	1 5	2 5	25J	50u	50m	150J	500			Si	DO4
51	1N1223A	500	1 6	175J$	20			175J	1 5	2 5	25J	50u	.50m	150J	500			Si	DO1
52#	10B5	500	1 8	125B	40	10m		175A	1 1	3 0	25A	50u	.50m	150A	500			SiΔ	DO1
53	NS2005	500	2 0		200	8 3m			1 2	2 0		25u			500				
54	200R5B	500	2 0	25	60			175	2 0	2.0	25	5 0u	.50m	150	500			Si	
55	AB500	500	2 0	25	15		3 0	100	1 25	1 0	25	5 0u			500			Si	A3q
56	GR21	500	2 0	25	20			125	1 1	1.0	25	10u	30m	150	500			Si	A1ry
57	M2F1	500	2 0	25	250			175A	50		150	2 0u	5 0m	150	500			Si	A1ep
58	M2F5	500	2 0	25	250			175A	50		150	10u	5 0m	150	500			Si	A1ep
59	M2F9	500	2 0	25	250			175A	50		150	10u	5 0m	150	500	100	200u	Si	A1ep
60	MB232	500	2 0	25	25	8 3m	2 0	175A	1 0 Δ	1 0 ⧄	25	25n	5 0u	100	500			Si	A60f
61	SEN250	500	2.0	25	150	8 3m		170A	1 2	2 0	50		25u	50	500			SiΔ	DO27
62	SLA26A	500	2 0	25	80	8 3m		150A	95	2 0	25	1 0u	10m	100	500			Si	A69
63	SLA26B	500	2 0	25	80	8 3m		150A	1 0	2 0	25	1 0u	10m	100	500			Si	A69
64	SLA26C	500	2 0	25	80	8 3m		150A	1 0	2 0	25	5 0u	25m	100	500			Si	A69
65	UT265	500	2 0	25A	30	8 3m	4 0	175A	1 0	90 ⧄	25A	2 0u	75u	100A	500			Si	A60
66#	SR3AM10	500	2 0	40A	150 §	8 3m		150J	1 1	10	25A	100u	1 0m	150J	500			SiΔ	A1fn
67	1N5175	500	2 0	50A	200			175A	1 2 †	2 0	50A		25u	50A	500			Si	DO27
68	20A5	500	2 0	50	50			170A	1 3	2 0	50	10u	25m	50	500			Si	DO27
69	20C5	500	2 0	50A	30	100m		175A	95	3 0		5 0u			500			Si	A86
70	B172-50	500	2 0	50	60			150C	2 0	2 0	25	5 0u	50m	100	500			Si	
71	BFW500†	500	2 0	50A	50			100C	1 1	1 0	25A								M40a
72▼	FW500†	500	2 0	50A	50			125A	900m	1 0	25A	5 0u						Si	M40a
73	K8F5	500	2 0	50	60			150C	2 0	2 0	25	5 0u	50m	100	500			Si	
74	SI5A	500	2 0	50A	80			150C	1 0	3 0	25A	1 0u			500			Si	A1bc
75	BH4R5†	500	2 0	55	45	8.3m		115	1 2 Ø	1 0	85		800uØ	85	350			Si	M151
76	HB500	500	2 0	75A	200			175C	1 0	2 0	25A	5 0u			500			Si	A179b
77	50LA	500	2 0	100A	100	4.0m		100A				25n			500			Si	F42
78	250R5B	500	2 5	25	250			175	2 0	2 5	25	10u	1 0m	150	500			Si	
79	M3F1	500	2 5	25	250			175A	50		150	2 0u	5 0m	150	500			Si	A1ep
80	M3F5	500	2 5	25	250			175A	50		150	10u	5 0m	150	500			Si	A1ep
81	M3F9	500	2 5	25	250			175A	50		150	10u	5 0m	150	500	100	200u	Si	A1ep
82#	0245	500	2 5	45	100	10m		150J	1 5	7 8	25	5 0u			400			Si	S87e
83	1N2529	500	2 5	150C$	50			150C	1 2	4 0	25C	4 0u	50m	150C	500			SiΔ	DO10
84	1N2540	500	2 5	150C$	50			150C	1 0	4 0	25C	1 0u	.10m	150C	500			SiΔ	DO10
85	1N2551	500	2 5	150C$	50			150C	1 5	4 0	25C	10u	1 0m	150C	500			SiΔ	DO10
86	BAV206	500	2 5	150C$	50			150C	1 2	2 5	25C	4 0u	50m	150C	500	650		Si	DO4
87	BAV216	500	2 5	150C$	50			150C	1 0	2 5	25C	1 0u	10m	150C	500	650		Si	DO4
88	BAV226	500	2 5	150C$	50			150C	1 5	2 5	25C	10u	1 0m	150C	500	650		Si	DO4
89	BAV306	500	2 5	150C$	50			150C	1 2	2 5	25C	4 0u	50m	150C	500	650		Si	S35
90	BAV316	500	2 5	150C$	50			150C	1.0	2 5	25C	1.0u	10m	150C	500	650		Si	S35
91	BAV326	500	2 5	150C$	50			150C	1 5	2 5	25C	10u	1 0m	150C	500	650		Si	S35
92	BY206	500	2 5	150C$	50			150C	1 2	2 5	25C	4 0u	50m	150C	500			SiΔ	DO4
93	BY216	500	2 5	150C$	50			150C	1 0	2.5	25C	1 0u	10m	150C	500			SiΔ	DO4
94	BY226	500	2 5	150C$	50			150C	1 5	2 5	25C	10u	1 0m	150C	500			SiΔ	DO4
95	BY306	500	2 5	150C$	50			150C	1 2	2 5	25C	4 0u	50m	150C	500			Si	S35
96	BY316	500	2 5	150C$	50			150C	1 0	2 5	25C	1 0u	.10m	150C	500			Si	S35
97	BY326	500	2 5	150C$	50			150C	1 5	2 5	25C	10u	1 0m	150C	500			Si	S35
98	MA50	500	2 5	150B	30			190B	1 0 Δ	2 5	150B	15uΔ						SiΔ	DO4
99	TM51	500	2 7	25C				125C	2 0	2 0	25		30m⧄	100	500			Si	S145
100	NS3005	500	3 0		300	8 3m			1 2	3.0		25u			500				
101	300R5B	500	3 0	25	250			175	2.0	3 0	25	10u	1 0m	150	500			Si	
102	AC500	500	3 0	25A	50			150C	1 0	3 0	25A	5.0u			500			Si	A1ey
103	M4F1	500	3 0	25	250			175A	50		150	2 0u	5 0m	150	500			Si	A1ep
104	M4F5	500	3 0	25	250			175A	.50		150	10u	5 0m	150	500			Si	A1ep
105	M4F9	500	3 0	25	250			175A	50		150	10u	5.0m	150	500	100	200u	Si	A1ep
106	1N1127	500	3 0	50A	25 §			150A	1 1	1 0	25A		30m⧄	150A	500			SiΔ	DO4
107	3A500	500	3.0	50	300	8 0m		175	1 2	3 0	25	500u			500			Si	A1eq
108	A138-5†	500	3 0	50	50	8 0m		150	1 1	3 0	25	5 0u			550			Si	M79c
109	CH302KA	500	3 0	50A	15			150A	1 2	1 0	25C		3.0mØ	125C	500			Si	S152a
110	CK302KA	500	3 0	50A	15			150A	1 2	1 0	25C		3 0mØ	125C	500			Si	S153

SYMBOLS AND CODES EXPLAINED IN INTERPRETER

5. RECTIFIERS

IN ORDER OF (1) PIV, (2) MAX AVG FWD CURRENT (3) TEMPERATURE, and (4) TYPE No.

LINE No.	4 TYPE No.	1 PIV (V)	MAX AVG FWD DC CURRENT 2 Io (A)	3 at TEMP (°C)	MAX RATINGS @ 25°C SURGE CUR PEAK 1 Cy (A)	PULSE WIDTH (s)	DISS. (W)	MAX. TEMP (°C)	MAXIMUM FORWARD VOLTAGE DROP Vf (V)	at If (A)	at TEMP (°C)	MAX. REVERSE CURRENT Ir @25°C & Vr (A)	Ir at T & Vr (A)	TEMP T (°C)	TEST VOLT Vr (V)	AVALANCHE RATINGS MAX V BKDN. (V)	MIN SLOPE (A/V)	MAT.	DESCRIPTION DWG. No.
1	CS302KA	500	3 0	50A	15			150A	1.2	1 0	25C		3.0mØ	125C	500			Si	S152
2	S3A5	500	3.0	50A	300			150C	1.0	3 0	25A	1.0u			500			Si	A1ez
3	S500Ø	500	3 0	50	25		10	175	1.0	1.0	25	5.0u				500		Si	DO4
4	HC500#	500	3.0	75A	300			175C	1.0	3.0	25A		2 0m	175A	500			Si	A179b
5	MR1035A,B	500	3.0	75A	300	8 3m	4 0	175J	90	3.0	25A	500u	1.5m	75A	500			SiΔ	Z44
6	MR2074	500	3.0	75	300	8.3m		175J	.50 Ø	3.0	75	1.0m	3.0m	75	500			SiΔ	A179a
7	MR2374	500	3.0	75	300	8.3m		175J	1.0	3.0	25	1 0m	3.0m	75	500			SiΔ	M173
8#	3F50	500	3.0	80A	40	10m		175A	1.1	3.0	25J	50u	.50m	150J	500			SiΔ	DO4
9	S55Ø	500	3.0	80$	20				1.3	5 0	25	100u			500			Si	S48
10	S5BR2	500 %	3.0	95B	53			130B	.55 Ø	1.5	25		2.0m	125	500			Si	S81
11	1N5405	500	3.0	105C	200 §			170C	1.2	3 0	105C		.50m	150C	500			Si	A3q
12	SEN350	500	3.0	105C	200	8.3m		170A	1.2	3.0	25	5.0u	500u	150	500			SiΔ	DO27
13	30S5Ø	500	3.0	125	150 §			175J	1.0 †	3 0	25	5.0u	300u	125	500			Si	A1ed
14#	D5003	500	3.0	125B	35			125B	1.5	3 0	25		.30m	125B	500			SiΔ	S4c
15	1N1586	500	3.0	150C				175B	1.5	6.0	25C		50mØ	150	500			Si	DO4
16	E2H3	500	3.0	150	200			175	1 3	3 0	150	10u	1.0m	150	500			Si	DO4
17#	S5M3	500 %	3 0	150J	180			150J	1.2	3.0			500u		500			SiΔ	A52d
18	1N1126A	500	3.3	50B	25			175B	1.1	1 0	25B	10u	.20m	150B	400			Si	DO4
19	JAN1N1126A,RA	500	3.3	50C	25	8.3m		150C	2.2 †	10	25C	5.0u	.20m	150C	400			Si	DO4Ø
20	1N1127A	500	3.3	50B	25			170A	1.1	1.0	25A	10u	.20m	150A	500	600		SiΔ	DO4
21	350R5B	500	3.5	25	250			175	2.0	3.5	25	10u	1.0m	150	500			Si	
22	1N3573	500	3.5	85B	35			165A	.50 Ø	2.5	150A		.40m	150A	500			Si	DO4
23	400R5B	500	4.0	25	250			175	2.0	4.0	25	10u	1.0m	150	500			Si	
24	1N2516	500	4 0	30C	30			165	1.1	1 5	25	2 0u			500			SiΔ	DO4Δ
25	1N2522	500	4.0	30C	25			150C				2.0u	.35mØ	150C	500			SiΔ	S117
26	4F5	500	4.0	75	300	8.0m	3 0	175B	1.3	4.0	25	100u	500u	100	550			SiΔ	F22
27	450R5B	500	4.5	25	250			175	2.0	4.5	25	10u	1.0m	150	500			Si	
28	MR50	500	4.5	150B	70			185B	1.0 Δ	4.5	150B	20uΔ						SiΔ	DO4
29	1N2236	500	5.0	25$	20			150	.60	1 5	25		500u	150	500			SiΔ	DO4
30	1N2236A	500	5.0	25$	100			150	.60	5 0	25		350u	150	500			SiΔ	DO4
31	1N2237	500	5 0	25$	20			150	60	1.5	25		500u	150	500			SiΔ	S35
32	1N2237A	500	5 0	25$	100			150	.60	5.0	25		350u	150	500			SiΔ	S35
33	500R5B	500	5.0	25	250			175	2.0	5.0	25	10u	1.0m	150	500			Si	
34	S5A5	500	5 0	50A	300			150C	1.1	5 0	25A	1 0u			500			Si	A1ez
35	50F5	500	5.0	100				175J	1.1	13	25C		10m	25A	500			Si	S41a
36	50LF	500	5.0	100A					1.5	5 0	100A		5.0m	100A	500			Si	F73
37	366K	500 †	5.0	145C	100			180J	1.1	5 0	25C		10m	180	500			Si	S27
38	407K	500	5.0	150C	125	8 3m		175J	1 1	5.0	25C		2.0mØ	175J	500			Si	DO4
39	E3H3	500	5.0	150	200			175	1.3	5.0	150	10u	1.0m	150	500			Si	DO4
40	F1H3	500	5 0	150C	200			175J	1.3	30	25C		1.0m	150C	500			Si	DO5
41	SL5	500	5.0	150A	150			175C	1.1	5.0	25A	5 0u			500			Si	DO4Ø
42	550R5B	500	5.5	25	250			175	2.0	5.5	25	10u	1.0m	150	500			Si	
43	NS6005	500	6 0		300	8 3m			1.2	6.0		25u			500				
44	6A500	500	6.0	25	300	8.0m		175	1.2	6 0	25	25u						Si	S19f
45	600R5B	500	6.0	25	250			175	2.0	6 0	25	10u	1.0m	150	500			Si	
46#	G5006	500	6.0	25A	140	10m	8 0	150A	1.2	6 0 †	25		3.0m	125C	500			SiΔ	DO4
47#	P5006	500	6 0	25A	140	10m	8.0	150A	1 2	6 0 †	25		3.0m	125C	500			SiΔ	S95a
48	SLA500†	500	6 0	25				150A				1.0u	75u	100	500				M545
49	6F50	500	6 0	55B$	50			190B					3.0mØ	150	500			SiΔ	DO4
50#	BYX50-500	500	6.0	110B	80 §	10m		150J	1 95	20	25J		1.4m	125J	500			Si	DO4Ø
51#	S5AN6	500 %	6.0	125B	125		6 5	150J	470mØ	6 0 †			2.0m	125B				SiΔ	DO4Ø
52	1N1347	500	6.0	150C	66		9.5	190J	1.2	10	25J		10m	25	500			Si	S26
53	1N1347A	500 †	6 0	150B$	150			200J	.64 Ø	6.0	150B		1.3mØ	150B	500			Si*	DO4
54	1N1347B	500	6 0	150C	150			190J	1.1	6.0			.02m	25C	500			SiΔ	DO4Δ
55	1N2152	500	6 0	150C$	150			150	1.2	10	25	4 0u	.50m	150A	500			Si	DO10
56	1N2152A	500	6.0	150C$	150			150	1.0	10	25	1.0u	.10m	150	500			Si	DO10
57	1N2496	500	6.0	150C				190J	1 1	6.0	25		2.0mØ	150C	500			Si	DO4
58	1N2570	500	6 0	150C$	150			150C	1.5	10	25C	10u	1.0m	150C	500			SiΔ	DO10
59	BAV406	500	6.0	150C$	150			150C	1.2	6 0	25C	4.0u	50m	150C	500	650		Si	S35
60	BAV416	500	6.0	150C$	150			150C	1.0	6.0	25C	1.0u	.10m	150C	500	650		Si	S35
61	BAV426	500	6.0	150C	150			150C	1.5	6.0	25C	10u	1.0m	150C	500	650		Si	S35
62	BAV706	500	6.0	150C$	150			150C	1.2	6.0	25C	4 0u	.50m	150C	500	650		Si	DO4
63	BAV716	500	6.0	150C$	150			150C	1.0	6 0	25C	1.0u	10m	150C	500	650		Si	DO4
64	BAV726	500	6.0	150C$	150			150C	1.5	6.0	25C	10u	1.0m	150C	500	650		Si	DO4
65	BY406	500	6.0	150C$	150			150C	1.2	6 0	25C	4.0u	.50m	150C	500			Si	S35
66	BY416	500	6.0	150C$	150			150C	1 0	6 0	25C	1.0u	.10m	150C	500			Si	S35
67	BY426	500	6.0	150C$	150			150C	1.5	6.0	25C	10u	1.0m	150C	500			Si	S35
68	BY706	500	6.0	150C$	150			150C	1.2	6 0	25C	4.0u	.50m	150C	500			SiΔ	DO4
69	BY716	500	6 0	150C$	150			150C	1.0	6.0	25C	1.0u	.10m	150C	500			SiΔ	DO4
70	BY726	500	6 0	150C$	150			150C	1.5	6.0	25C	10u	1.0m	150C	500			SiΔ	DO4
71	E4H3	500	6 0	150	200			175	1.3	6.0	150	10u	1.0m	150	500			Si	DO4
72	KR602KA	500	6.0	150S$	75			175S	1.2	6.0	150S		1.0m	150S	500			Si	DO10
73	MS50Ø	500	7 5	150B	140			185B	1.0 Δ	7 5	150B	20uΔ						SiΔ	DO4
74#	S5B50	500	8.0	40A	430	10m		150J	1.05 Δ	20	25A		1.6m	25A	500			SiΔ	S50
75	E5H3	500	8.0	150	200			175	1.3	8.0	150	10u	1.0m	150	500			Si	DO4
76	1N2256	500	10	25C$	200			150	.60	10	25		1.0m	150	500			SiΔ	DO4
77	1N2256A	500	10	25C$	200			150	.60	10	25		.50m	150	500			SiΔ	DO4
78	1N2257	500	10	25$	200			150	.60	10	25		1.0m	150	500			SiΔ	S35
79	1N2257A	500	10	25C$	200			150	.60	10	25		.50m	150	500			SiΔ	S35
80#	G5010	500	10	25A	230	10m	17	150A	1.1	10 †	25		3 0m	125C	500			SiΔ	DO4
81#	P5010	500	10	25A	230	10m	17	150A	1.1	10 †	25		3.0m	125C	500			SiΔ	S95a
82	50J2P	500	10	100A	150	4 0m			1 3			2 5m			500			Si	S43
83#	1S165	500	10	120B	200			175	1.6	50	25J		2.0m	175J	500			SiΔ	S103
84#	SA5AN12	500	10	120B	210			150J	470mØ	10			2.0m		500			SiΔ	DO4Ø
85	BYY69	500	10	125	175			150J											S72c
86	BYY70	500	10	125	175			150J											S72c
87#	D5010	500	10	125B	130			125B	1 5	10	25		.30m	125B	500			SiΔ	S4c
88#	S5AN12	500 %	10	125B	210			150J	500mØ	9.5	25B		2.0m	125B				SiΔ	DO4Ø
89	367K	500 †	10	130C	150			180J	1.2	10	25C		10m	180C	500			Si	S27
90	408K	500	10	145C	175	8 3m		175J	1.2	10	25C		2.0mØ	175J	500			Si	DO4
91	40113	500	10	150C	140 §			175C	.60	10	150C	75uΔ	.85mØ	150C	500			SiΔ	DO4
92	E6H3	500	10	150	200			175	1.3	10	150	10u	1 0m	150	500			Si	DO4
93	F2H3	500	10	150C	200			175J	1 3	30	25C		1 0m	150C	500			Si	DO5
94	TR501	500	10	150$				175$	1 5	25	25		5.0mØ	150C	500			Si	DO5
95	SCPD2	500	11	55A	300			150A	1.0	3.0	25A	110u	200u	100A	500			Si	M496
96	SCPN2	500	11	55A	300			150A	1 0	3.0	25A	110u	200u	100A	500			Si	M496
97	SCPP2	500	11	55A	300			150A	1.0	3.0	25A	110u	200u	100A	500			Si	M496
98	SL500	500	12	50A	300			175C	1 4	12	25A		2.0m	150A	500			Si	DO4Ø
99#	8AN50	500	12	55A	210	10m		140B	.65 Ø	13	25A		10m	120J	500			Si	S4qØ#
100♦	A129E	500	12	64	150	8.3m		125	1.55	12	64		6 0m	125	500			Si	DO4
101	50J3P	500	12	100A	150	4.0m		100A	1.3			2.5m			500			Si	S23
102▼#	SR10A10	500	12	120C	200 §	8 3m		150J	1 52	35	25C		3.0m	150J	500			SiΔ	S19t
103#	SR10D10	500	12	120C	200	8.3m		150	1 3	20			3.0mØ	150J	500			Si	S19c
104#	SR10L10S	500	12	120C	200			150J	1.2 †	40	25C		1.5mØ	150J	500			Si	S249a
105	1N1205	500 *	12	150C	100		18	190J	1.4	20	25J	10u			500			Si	S27
106	1N1205A	500	12	150B$	240			150B	1.3	12			3.0m	150A	500			SiΔ	DO4ΔØ
107	1N1205B	500	12	150C$	250			150B	1 1	12			1.0m	150A	500			SiΔ	DO4Δ
108	1N2581	500	12	150C$	250			150C	1 2	20	25C	8.0u	1.0m	150C	500			SiΔ	DO10
109	1N2592	500 Ø	12	150C	250			150C	1 0	12		2.0u	20m	150C	500			SiΔ	DO10
110	1N2603	500	12	150C$	250			150C	1 5	20	25C	20u	2 0m	150C	500			SiΔ	DO10

SYMBOLS AND CODES EXPLAINED IN INTERPRETER

5. RECTIFIERS

IN ORDER OF (1) PIV, (2) MAX AVG FWD CURRENT (3) TEMPERATURE, and (4) TYPE No.

LINE No.	TYPE No.	4 1 PIV (V)	MAX AVG FWD DC CURRENT 2 Io (A)	3 at TEMP (°C)	MAX RATINGS @ 25°C SURGE CUR. PEAK 1 Cy (A)	PULSE WIDTH (s)	DISS. (W)	MAX. TEMP (°C)	MAXIMUM FORWARD VOLTAGE DROP Vf (V)	at If (A)	at TEMP (°C)	MAX. REVERSE CURRENT Ir @25°C & Vr (A)	Ir at T & Vr (A)	TEMP T (°C)	TEST VOLT Vr (V)	AVALANCHE RATINGS MAX V BKDN. (V)	MIN SLOPE (A/V)	MAT.	DESCRIPTION DWG. No.
1	BAV506	500	12	150C$	250			150C	1 2	12	25C	8.0u	1.0m	150C	500	650		Si	S35
2	BAV516	500	12	150C$	250			150C	1.0	12	25C	2.0u	.20m	150C	500	650		Si	S35
3	BAV526	500	12	150C$	250			150C	1.5	12	25C	20u	2.0m	150C	500	650		Si	S35
4	BAV806	500	12	150C$	250			150C	1.2	12	25C	8.0u	1.0m	150C	500	650		Si	DO4
5	BAV816	500	12	150C$	250			150C	1 0	12	25C	2.0u	.20m	150C	500	650		Si	DO4
6	BAV826	500	12	150C$	250			150C	1 5	12	25C	20u	2.0m	150C	500	650		Si	DO4
7	BY506	500	12	150C$	250			150C	1 2	12	25C	8.0u	1.0m	150C	500			Si	S35
8	BY516	500	12	150C$	250			150C	1.0	12	25C	2 0u	.20m	150C	500			Si	S35
9	BY526	500	12	150C$	250			150C	1 5	12	25C	20u	2.0m	150C	500			Si	S35
10	BY806	500	12	150C$	250			150C	1.2	12	25C	8.0u	1 0m	150C	500			Si△	DO4
11	BY816	500	12	150C$	250			150C	1.0	12	25C	2.0u	.20m	150C	500			Si△	DO4
12	BY826	500	12	150C$	250			150C	1 5	12	25C	20u	2.0m	150C	500			Si	DO4
13	E7H3	500	12	150	200			175	1.3	12	150	10u	1.0m	150	500			Si	DO4
14	MR1125	500	12	150C	300 §			190J	1.0	12	25C	500u			500			Si△	DO4
15	TR1125	500	12	150C	300 §			190J	1 2	12	25C	50u	.40m∅	150C	500			Si	DO4
16	UR123KA	500	12	150S$	240			175S	1.2	12	25		3.0m	150S	500			Si	DO10
17	12F50	500	12	155B$	65			190B					3.0m∅	150	500			Si△	DO4
18#	SU512	500	12	175C$	150			175S	1 2	12	25		3 0m	150C	500			Si△	M80
19	MT50	500	14	150B	240			185B	1 0 △	14	150B	100u△						Si△	DO4
20#	SC515	500	15	50A	150			160J	1.1	15	25A	100u	.50m	100A	500			Si△	DO4
21#	5M50	500	15	79B	300	10m		130A	1.3 †	50	130J		5.0m		500			Si	S193a
22#	RN5015	500	15	100C	350	10m	25	125C	1 2	15 †	25		3.0m	125C	500			Si△	DO5
23#	SR10F10S	500	15	115C	200			150J	1 2 †§	40	25C		1.5m	150J	500				M337a
24#	SR10N10S	500	15	115C	200			150J	1.2 †§	40	25C		1.5m	150J	500				C112
25#	S5AN15	500	15	120B	220			150J	490m∅	15			3.0m		500			Si△	S324∅
26#	S5BN15	500	15	120B	220			150J	490m∅	15			3 0m		500			Si△	S320∅
27	368K	500	15	125C	240	8.3m		180J	1 3	15	25C		2.0m∅	130C	500			Si	DO4
28	409K	500	15	125C	250	8 3m		175J	1.3	15	25C		2.0m∅	175J	500			Si	DO4
29	1N3213	500	15	150C	350			175A	1.5	40	75	1.0u	10m	150	350			Si	S4h
30	F3H3	500	15	150C	200			175J	1 3	30	25C		1 0m	150C	500			Si	DO5
31	VS500	500	15	150C$	250			175A	1.5	15	25A	1 0u			500			Si	S21b
32	1N3621	500	16	155B$	300			175B					1 3m	175B	500			Si△	DO4
33	S5978G,9G	500	18					150C	1 2										A1ss#
34#	S5BR8	500 %	18	120B	188		18	140B	.60 ∅	18	25		10m	125	500			Si	S122a
35	40213	500	18	150C	250 §			175A	650m∅	18	150C	100u	1 7m∅	150C	500			Si△	DO5∅
36	V500	500	18	150C	300			175A	1.2	25	25A		4 0m	150A	500				DO21∅
37	2050	500	19	25A	200		4 0 ∅	150A	60 ∅	19	25A		10m∅	150C		800		Si△	DO4△
38	1N2276	500	20	25$	400			150	60	20	25		1 0m	150	500			Si△	DO4
39#	S8B50	500	20	40A	100	10m		150J	1 05 △	40	25A		4.0m	25A	500			Si△	S51
40	A40E	500	20	110B	300			175B	1 2	20	25J	1 0m			500			Si	S88
41	A41E	500	20	110C	300			175J	1 2	20	25J	1.0m			500			Si	S88
42	A44E	500	20	110C	300			175J	1 2	20	25J	1 0m	4 5m∅	150J	500			Si	M76∅
43#	1S175	500	20	120B	400			175	1.6	100	25J		6 0m	175J	500			Si△	S102
44#	S5AN20	500	20	120B	250			150J	480m∅	20			3 0m		500			Si△	S324∅
45#	S5BN20	500	20	120B	250			150J	480m∅	20			3 0m		500			Si△	S320∅
46	1N1197A	500	20	150C	350			175C	.60	20	25		2.2m	150C	500			Si△	DO5△
47	JAN1N2135A,RA	500	20	150C	350	8 3m		150C	1 3 †	60	25C	5.0m	1.5m	150C	400			Si	DO5∅
48	417K	500	20	150C	350	8.3m		175J	1 05	20	25C		2 0m∅	150C	500			Si	DO5
49	F4H3	500	20	150C	600			175J	1 3	50	25C		2 0m	150C	500			Si	DO5
50	TM59	500	21	75C				190S	1 2	12	25		2 0m∅	150	500			Si	S145
51	2150	500	22	120C	200			175J	60 ∅	22	25A		1 0m∅	150C	500	800		Si	DO4
52	S2150	500	22	120C	200		1 ∅∅	175J	.60 ∅	22	25A		1 0m∅	150C	500	800		Si△	DO4△
53▼	S25A50	500	25	55	300	8 3		150	1 0	3.0	25	10u	100u	100	50			Si	M542
54▼	A139E	500	25	75	400	8.3m		125	1.85	25	75		6.0m	125	500			Si	DO5
55	25P50	500	25	100C	300			175J	7 0 ∅	25 †	25C		7 0m∅	150C	500			Si△	M38ab∅
56	25PW50	500	25	100C	300			175J	70 ∅	25 †	25C		4.0m∅	150C	500			Si△	DO21∅
57#	SR20F10S	500	25	120C	400			150J	1 2 †§	80	25C		3.0m	150J	500				M337a
58#	SR25A10S	500	25	120C	600			150J	1.2 †§	80	25C		3.0m	150J	500				S249b
59	25F50	500	25	140				190J	1.0	25	25C		20m	25	500			Si	M56△∅
60	1N1197	500 *	25	145C	125		30	190J	1.4	30	25J	10u			500			Si	S29
61	1N2159	500 ∅	25	145B	400			200J	60 ∅	25	145B		2 5m∅	145B	500			Si*	DO5∅
62	418K	500	25	145C	400	8.3m		175J	1.1	25	25C		2.0m∅	145C	500			Si	DO5
63	F5H3	500	25	150C	600			175J	1 3	90	25C		2.0m	150C	500			Si	DO5
64#	ZR35C	500	30	20A$	400	10m		140A	1 2	30	25	500u	2.0m	100	500			Si△	S38
65	1N3664	500 †	30	100C	400 §			175C	70 ∅	25	25		2 5m∅	150	500			Si	DO21
66#	S5AN31	500	30	120B	347			150J	600m∅	30			4 0m		500			Si△	S325∅
67#	S5BN31	500	30	120B	347			150J	600m∅	30			4 0m		500			Si△	S321∅
68	G3H3	500	30	150C	1 5k			175J	1 3	200	25C		5.0m	150C	500			Si	DO8
69#	15AN50	500	34	20A	500	10m		140B	700m∅	25	25A		20m	120J	500			Si	S241a∅#
70	3150	500	34	25A	200		4 0 ∅	150A	60 ∅	34	25A		1 0m∅	150C		800		Si△	DO5△#
71	1N2284	500	35	25$	400			150	60	35	25		5 0m	150	500			Si△	DO5
72▼	HEPR0256-RT	500	35	25$	400			190†										Si	DO5
73	371K	500 †	35	100C	500	8 3m		160J	1.2	35	25C		20m	160J	500			Si	DO5
74#	SR30B10	500	35	100C	600	8 3m		150	1 3	50			10m∅	150J	500			Si	S19d
75	1N1189	500	35	140C	500	8 3		140C	1 7	35	140C							Si	S29a
76	35F50	500	35	140	900			190J	1 1	50	25		20m	25	50			Si	M56△∅
77	127350E	500	35	150	500	8.3m		200J	1.3	35	25C		3 5m∅	150C	500			Si	DO21
78	TR502	500	37	65C				175S	1 5	50	25C		5.0m∅	150C	500			Si	DO5
79#	K5040	500	40	90C	800	10m	44	125C	1 2	40 †	25		4.0m	125C	500			Si△	S245
80#	10M50	500	40	104B	800	10m		130A	1 2 †	120	130J		10m		500			Si	S4s
81	419K	500	40	120C	500	8 3m		175J	1.2	40	25C		2.0m∅	120C	500			Si	DO5
82#	S5AN40	500	40	120B	485			150J	500m∅	40			4 0m		500			Si△	S325∅
83#	S5BN40	500	40	120B	485			150J	500m∅	40			4.0m		500			Si△	S321∅
84	40HF50	500 †	40	140C	500 §	8.3m		180J	1.3	40 †	140C		7.0m∅	140C	500			Si△	S21e∅
85	1N1189A	500	40	150C	800		68	200C	65	40	150C	15u∅	2.0m∅	150	500			Si△	DO5
86#	BYY75	500	40	150J	800			100B	1 0 ∅	40	25		1 7m	125B	500			Si△	S72b
87#	BYY76	500	40	150J	800			100B	1 0 ∅	40	25		1.7m	125B	500			Si△	S72e
88	G4H3	500	40	150C	1.5k			175J	1.3	200	25C		5 0m	150C	500			Si	DO8
89	127351E	500	44	150	700	8.3m		200J	1 3	44	25C		3 5m∅	150C	500			Si	DO21
90#	25AN50	500	45	20A	700	10m		140B	700m∅	40	25A		20m	120J	500			Si	S241a∅#
91	1N2454	500	45	60C	300			175B	1 1	20	25		5 0m∅	150B	500			Si△	DO5
92	S3450	500	50	120C	600		2 ∅∅	175J	60 ∅	50	25A		2 0m∅	150C	500	800		Si△	DO5△
93	50C50	500	50	140	400	1	55	190J	1 1	50	25		20m	150	50			Si	DO5△∅
94	1N1686	500	50	150C	700	8 3m		165C	1 2	1 1	150C		25m	150C	500			Si	S8q
95	MR1208	500	50	150C	800	8 3m		190J	40 ∅	50	150C		10m	150C	500			Si	M226∅
96#	S500-5	500	55	50	3.7k	20m		120	1 2	500	50	1 0m			500			Si	M189
97#	S5AN55	500	55	125B	935			150J	500m∅	55			6 0m		500			Si△	∅
98#	S5BN55	500	55	125B	935			150J	500m∅	55			6.0m		500			Si△	S322∅
99#	S5GN55	500	55	125B	935			150J	500m∅	55			6.0m		500			Si△	S322∅
100	1N2466	500	60	60C	450			175B	1.1	30	25		5.0m∅	150B	500			Si△	DO5
101	1N2137	500	60	100C	700 §			175C	1.4	60	115C		30m△	175C	400			Si	DO5
102	1N2137A	500	60	100C	900 §			200C	1.3	60	140C		30m△	200C	400			Si	DO5
103#	KS5060	500	60	110C	1 5k	10m	67	150C	1.2	60 †	25		5.0m	125C	500			Si△	S245
104#	20M50	500	60	126B	1.0k	10m		175A	1.5 †	180	175J		10m		500			Si	S4t
105	H5H3	500	60	150C	3.0k			175J	1.3	300	25C		10m	150C	500			Si	DO9
106	TR503	500	65	75C				175C	1 5	100	25C		5 0m∅	150C	500			Si	DO5
107#	45AR50	500	70	25A	1.1k	10m		140B	70 ∅	90	25A		25m	120J	500			Si	S8j#
108#	BYX34/500	500	70	100B	1 0k	10m	30	150J	1.7	250	150J		10m	125J	500	900		Si	S12c∅
109#	SR70C10	500	70	119C	1 5k§	8 3m		150J	1 6	220	25C		30m	150J	500			Si△	S333
110#	S5AN71	500	70	120B	1 2k			150J	470m∅	70			6.0m		500			Si△	∅

SYMBOLS AND CODES EXPLAINED IN INTERPRETER

5. RECTIFIERS

IN ORDER OF (1) PIV, (2) MAX AVG FWD CURRENT (3) TEMPERATURE, and (4) TYPE No.

LINE No	4 TYPE No.	1 PIV (V)	MAX AVG FWD DC CURRENT 2 Io (A)	3 at TEMP (°C)	MAX RATINGS @ 25°C SURGE CUR. PEAK 1 Cy (A)	PULSE WIDTH (s)	DISS. (W)	MAX. TEMP (°C)	MAXIMUM FORWARD VOLTAGE DROP Vf (V)	at If (A)	at TEMP (°C)	MAX. REVERSE CURRENT Ir @25°C & Vr (A)	Ir at T & Vr (A)	TEMP T (°C)	TEST VOLT Vr (V)	AVALANCHE RATINGS MAX V BKDN. (V)	MIN SLOPE (A/V)	MAT.	DESCRIPTION DWG. No.
1#	S5BN71	500	70	120B	1.2k			150J	470mØ	70			6 0m		500			Si△	S323Ø
2#	S5GN71	500	70	120B	1 2k			150J	470mØ	70			6.0m		500			Si△	S322Ø
3	70H50	500	70	125C	1.2k§	8 3m		200J	1 3	70 †	125C		10mØ	125C	500			Si*	DO5Ø
4	70H50A	500 †	70	125C	1.2k§	8 3m		200J	1.3	70	125C		10mØ	125C	500			Si△	DO5Ø
5	1N1402	500 †	70	150C	1 2k			190J	1.25	70	150C		30m	150C	500			Si	S14b
6	CH109E2	500	70	150C	1.5k	8 3m		200C	1.3 △	150	150C		15mØ	150C	500			Si*	S53△
7	J4H3	500	70	150C	4 0k			175J	1 2	300	25C		10m	150C	500			Si	DO9
8	J5H3	500	70	150C	4.0k			175J	1.2	300	25C		10m	150C	50			Si	DO9
9	50JH3	500	72		150	4 0m		100A	1 2									Si	S11fØ
10	75E50	500	75	150C	850	4 0m		190J	1 0	90	25C		40m	25C	500			Si	S83a△Ø
11	75F50	500	75	150C	850	4 0m		190J	1.0	90	25C		40m	25C	500			Si	M56a△Ø
12#	S16B50	500	80	40A	5 4k	10m		120J	1 05 △	200	25A		16m	25A	500			Si△	M26#
13	ST650	500	100	25A	1.6k			190J	1 2	100	25A		5 0m	25	500			Si	Z29
14#	70BN50	500	100	40A	1 8k	10m		140B	70 Ø	130	25A		30m	120J	500			Si	S8kØ#
15#	TH1005	500	100	40A	950	10m		175S	95	100	25A		20m	150J	500			Si△	S101
16	1N2434	500	100	75C	950			175B	1.1	50	25		10mØ	150B	500			Si△	DO8
17#	1S435R	500	100	105B	1 6k			175J	1 6	500	25J		16m	175J	500			Si△	S12f
18	1N3292	500	100	130C	1 6k	8 3m		200C	1 5	100	130C		21m	130B	500			Si	DO8
19	1N3292A	500 †	100	130C	1.6k	8 3m		200C	1 5	100	130C		21m	130C	500			Si	DO8Ø
20	1N3292B	500	100	130C	2 3k			200C	1 25	100	130C		21m	130C	500			Si	DO8
21	1N3292R	500	100	130B	1.6k			200A	900m	100	200J		20	200J	500			Si	DO8
22	A70E	500	100	130B	1 6k	8 3m		200J	600mØ	100	130B		9 0m	130B	500			Si	DO8
23	A71E	500	100	130B	1 6k	8 3m		200J	600mØ	100	130B		9 0m	130B	500			Si	DO8
24	MR1218SB	500	100	135C	2 0k§	8.3m	160	190J	400mØ	80 †	150C		15m	150C	500			Si△	S199
25	MR1218SL	500	100	135C	2 0k§	8 3m	160	190J	400mØ	80 †	150C		15m	150C	500			Si△	S87a
26	MR1818SB	500	100	135C	2 0k§	8 3m	160	190J	400mØ	80 †	150C		15m	150C	500			Si△	S199m
27	MR1818SL	500	100	135C	2 0k§	8 3m	160	190J	400mØ	80 †	150C		15m	150C	500			Si△	S87f
28	100E50	500	100	150C	2.0k	4 0m		190J	1.0	140	25C		40m	25C	500			Si	S83△Ø
29	100F50	500	100	150C	2 0k	4.0m		190J	1 0	140	25C		40m	25C	500			Si	M56a△Ø
30▼	100F50△	500	100	150C	2 0k	4 0m		190J	1 0	140	25C		40m	25C	500			Si	M56a△Ø
31	150L50A	500 †	100	150C	3.0k§	8 3m		200J	1 2	150 †	150C		13mØ	150C	500			Si*	DO30Ø
32	S4250	500	104	120C	1 5k		2 5 ØØ	175J	60 Ø	104	25A		5 0mØ	150C	500	800		Si△	DO8△
33#	S12P500E	500	110	75C	2.0k	10m		175J	1 35	300	25A	1.0m	15m	175C	500			Si△	F56m
34	1N1666	500	116	120C	3 0k			175J	1 3	200	25		10m	150	500			Si	S14d
35#	S10N500E3	500	125	100C			160	150	.97	125	100C	6.0m	20m	100C	500			Si	F56m
36#	S10N500E4	500	125	100C			160	150	1 03	125	100C	6.0m	20m	100C	500			Si	F56m
37#	S10N500E5	500	125	100C			160	150	1 08	125	100C	6 0m	20m	100C	500			Si	F56m
38	10912E	500	125	150	1 7k	8 3m		200J	1 3	125	25C		6.0mØ	150C	500			Si	DO8
39#	125BN50	500	130	20A	3 0k	10m		140B	700mØ	180	25A		40m	120J	500			Si	S120aØ#
40	1N2444	500	150	75C	1 2k			175B	1.1	70	25		10m	150B	500			Si△	DO8
41#	S11P500E	500	150	75C	2 2k	10m		175J	1 35	300	25A	1.0m	15m	175C	500			Si△	F56m
42#	SD503K	500	150	75C	2 2k	10m		175J	1.35	300	25A	1.0m	15m	175C	500			Si△	Ø
43	1N3089	500	150	100C	3 0k§			200C	1 2	150	150C		17m	150C	500			Si	DO30
44	1N4591	500	150	110	3 0k			200A	1 4	150	110		25m	200	100			Si	DO8Ø
45#	S5PN125	500 %	150	110B	3 3k			150J	1 1	150			30m		500			Si*	S319Ø
46#	S5BR125	500 %	150	115B	3.3k			150J	1 1	150			40m		500			Si*	F19
47#	S5KN125	500 %	150	115B	3 3k			170J	1 1	150			30m		500			Si*	F80Ø
48#	45M50	500	150	116B	3 0k	10m		175A	1 5 †	500	175J		20m		500			Si	S8m
49#	S5LN125	500 %	150	125B	3.3k			150J	1 1	150			30m		500			Si*	M521Ø
50	150K50A	500 †	150	150C	3 0k§	8.3m		200J	1 2	150 †	150C		13mØ	150C	500			Si*	DO8Ø
51	ST750	500	160	25A	3 0k			190J	1 2	160	25A		40m	25	500			Si	Z28
52	ST1050	500	160	25	3 0k			190J	1 2	160	25		40m	25	500			Si	Z27
53	DRS165	500	160	115C	2 5k	8 3m	170	175J	1.45	160 †	115C	5 0m	15m	115C	500			Si△	S201aØ
54	S5150	500	160	120C	2 2k		3 ØØ	175J	.60 Ø	160	25A		10mØ	150C	500	800		Si△	DO9△
55	1N1287	500 *	160	125C	1 3k			190J	1 3	210	25J		40m	25	500			Si	S14g
56	1N1297	500 *	160	125C	1 3k			190J	1 3	210	25J		40m	25	500			Si	S8e
57	1N3268	500 †	160	125C	2 0k			190J	1 25	160	125C		12m	125C	500			Si	DO9Ø
58	160E50	500	160	150C	5 0k	4 0m		190J	1 0	160	25C		40m	25C	500			Si	S83△Ø
59	160F50	500	160	150C	5 0k	4 0m		190J	1 0	160	25C		40m	25C	500			Si	M56a△Ø
60	175E50	500	175	150C	5 0k	4.0m		190J	1 0	175	25C		40m	25C	500			Si	S83△Ø
61	175F50	500	175	150C	5 0k	4 0m		190J	1 0	175	25C		40m	25C	500			Si	M56a△Ø
62#	200BN50	500	180	20A	7 5k	10m		140B	700mØ	240	25A		40m	120J	500			Si	S120aØ#
63#	S13N500E	500	190	75C	2 5k	10m		175J	1 35	300	25A	1 0m	15m	175C	500			Si△	F56m
64#	S20P500JA	500	200	100C	4 0k	10m		175J	1 25	600	25A		30m	175C	500			Si△	
65	DRS205	500	200	110C	3 5k	8 3m	220	175J	1 40	200 †	110C	5.0m	15m	110C	500			Si△	S210aØ
66	200UB50	500	200	115C	3 5k§	8 3m		165J	1.25	200 †	115C		10mØ	115C	500			Si*	S279Ø
67	S5BN200	500 %	200	120B	4.0k		250	150B	.60 Ø	190	25B		40m	125C	500			Si	F19a
68	411K	500	200	130	3 0k	8 3m		200J	1 5	125	130C		8 0mØ	130C	500			Si	DO8
69	MR1228FB	500	200	135C	3.6k	8 3m		190J	40 Ø	160	150		20m	150C	500			Si△	M227
70	MR1228FL	500	200	135C	3.6k	8 3m		190J	40 Ø	160	150		20m	150C	500			Si△	M228
71	MR1228SB	500	200	135C	3 6k	8 3m		190J	.40 Ø	160	150		20m	150C	500			Si△	S199a
72	MR1228SL	500	200	135C	3 6k	8 3m		190J	.40 Ø	160	150		20m	150C	500			Si△	S87b
73	410K	500	220	110C	3 0k	8 3m		190J	1.3	150	110C		10mØ	110	500			Si	DO8
74▼#	1S2345	500	240	92C	5 0k§	8 3m		150J	1.2	400	25C		30m	150J	500			Si△	M568
75	1N1676	500 *	240	120C	1 8k			190J	1 25	300	25J		50m	25	500			Si	S14f
76	1N3169	500 *	240	120C	3 0k			190J	1 25	240	25C		16m	125C	500			Si	S14f2
77	1N1336	500 *	240	125C	1 8k			190J	1.25	300	25J		50m	25	500			Si	S14f2
78	1N1382	500 *	240	125C	1 8k			190J	1.25	300	25J		50m	25	500			Si	S14h
79	240E50	500	240	150C	7 5k	4.0m		190J	1 0	240	25C		50m	25C	500			Si	S83△Ø
80	240F50	500	240	150C	7 5k	4 0m		190J	1.0	240	25C		50m	25C	500			Si	M56a△Ø
81	ST850	500	250	25A	5 0k			190J	1.2	250	25		50m	25	500			Si	Z27
82	ST950	500	250	25A	5 0k			190J	1 2	250	25		50m	25	500			Si	Z28
83	A96E	500	250	70C	3.3k	8 3m		125J	1 25	250	25		15m	70C	500			Si	S120b
84	A97E	500	250	70C	3.3k	8.3m		125J	1 25	250	25J		15m	70C	500			Si	S120b
85	1N2063	500	250	100C	4.5k§			200C	1.3 †	250	135C		17m	135	400			Si	DO9
86	CH119E	500 †	250	100C	4 0k			200S	1 3	250	25C		8 5m	100C	500			Si	DO8Ø
87#	1S735R	500	250	105B	4 5k			175J	1.45	1 0k	25J		60m	175J	500			Si△	S12e
88#	70M50	500	250	107B	4 0k	10m		175A	1.5 †	800	175J		20m		500			Si	S8n
89	DRS245	500	250	110C	4.5k	8.3m	280	175J	1 40	250 †	110C	5 0m	15m	110C	500			Si△	S210aØ
90	S5350	500	250	120C	4 0k		4 ØØ	175J	60 Ø	250	25A		10mØ	150C	500	800		Si△	DO9△
91	1N3739	500	250	130C	4 5k	8 3m		200C	1 1 △	250	130C		13m	130B	500			Si	DO9Ø
92	A90E	500	250	130B	4 5k	8 3m		200J	400mØ	250	130B		13m	130B	500			Si	DO9
93	A91E	500	250	130B	4 5k	8 3m		200J	400mØ	250	130B		13m	130B	500			Si	DO9
94	70S50	500	250	135C	4 5k§	8 3m		200J	1 25	250 †	135C		25mØ	135C	500			Si*	S8b2Ø
95	70T50	500	250	135C	4 5k§	8 3m		200J	1.25	250 †	135C		25mØ	135C	500			Si*	S8b1Ø
96#	S21N500H	500	270	75C	3.4k	10m		175J	1 45	600	25A	30m	80m	175C	500			Si△	M199
97	1N4051	500	275	120C	5.0k			190J	1.35	275	120C		15m	120C	500			Si	DO9Ø
98	CS131E	500 †	275	120C	4 0k			200	1 3	275	25C		15mØ	130C	500			Si	DO9
99	275E50	500	275	150C	7 5k	4.0m		190J	1.0	275	25C		50m	25C	500			Si	S83△Ø
100	275F50	500	275	150C	7 5k	4.0m		190J	1.0	275	25C		50m	25C	500			Si	M56a△Ø
101#	S5EN270	500 %	290	125B	1 5k	20m		160B†	.975	340			50m	125B	500			Si*	M307
102#	S5FN270	500 %	290	125B	1.5k	20m		160B†	975	340			50m	125B	500			Si*	M357c
103#	S5GN270	500 %	290	125B	1.5k	20m		160B†	.975	340			50m	125B	500			Si*	M357a
104♦#	S5HN270	500 %	290	125B	7.2k	10m		160B†	975m	340			50m	125B	500			Si*	M366a
105#	S5EN301	500	300	100B	5.1k	10m	410	100B	65 Ø	300	100B		35m	100B	500			Si	M307
106#	S5FN301	500	300	100B	5 1k	10m	410	100B	65 Ø	300	100B		35m	100B	500			Si	M248
107#	S5GN301	500	300	100B	5 1k	10m	410	100B	65 Ø	300	100B		35m	100B	500			Si	M248a
108#	S5HN301	500	300	100B	5 1k	10m	410	100B	65 Ø	300	100B		35m	100B	500			Si	M370
109	300U50A	500 †	300	120C	5 0k§	8 3m		200J	1.4	300 †	120C		13mØ	120C	500			Si*	DO9Ø
110	MR1238FB	500	300	135C	5.0k	8 3m		190J	.40 Ø	240	150C		35m	150C	500			Si	M227aØ

SYMBOLS AND CODES EXPLAINED IN INTERPRETER

5. RECTIFIERS

IN ORDER OF (1) PIV, (2) MAX AVG FWD CURRENT (3) TEMPERATURE, and (4) TYPE No.

LINE No.	4 TYPE No	1 PIV (V)	MAX AVG FWD DC CURRENT 2 Io (A)	3 at TEMP (°C)	MAX RATINGS @ 25°C SURGE CUR PEAK 1 Cy (A)	PULSE WIDTH (s)	DISS. (W)	MAX TEMP (°C)	MAXIMUM FORWARD VOLTAGE DROP Vf (V)	at If (A)	at TEMP (°C)	MAX. REVERSE CURRENT Ir @25°C & Vr (A)	Ir at T & Vr (A)	TEMP T (°C)	TEST VOLT Vr (V)	AVALANCHE RATINGS MAX V BKDN. (V)	MIN SLOPE (A/V)	MAT.	DESCRIPTION DWG. No.
1	MR1238FL	500	300	135C	5 0k	8.3m		190J	40 Ø	240	150C		35m	150C	500			Si	M228b⊘
2	MR1238SB	500	300	135C	5 0k	8 3m		190J	40 Ø	240	150C		35m	150C	500			Si	S199b⊘
3	MR1238SL	500	300	135C	5 0k	8.3m		190J	40 Ø	240	150C		35m	150C	500			Si	S87c⊘
4#	S5EN290	500 %	310	125B	1 6k	20m		160Bt	.975	340			50m	125B	500			Si*	M307
5#	S5FN290	500 %	310	125B	1 6k	20m		160Bt	975	340			50m	125B	500			Si*	M357c
6#	S5GN290	500 %	310	125B	1 6k	20m		160Bt	.975	340			50m	125B	500			Si*	M357a
7♦#	S5HN290	500 %	310	125B	7 2k	10m		160Bt	975m	340			50m	125B	500			Si*	M366a
8#	S30N600JA3	500	320	100C	4 8k	10m		175J	1 15	600	25A	2 0m	30m	175C	500			Si△	M378
9#	S30N600JA4	500	320	100C	4.8k	10m		175J	1.25	600	25A	2 0m	30m	175C	500			Si△	M378
10#	S5EN310	500 %	330	125B	1.7k	20m		160Bt	.90	400			50m	125B	500			Si*	M307
11#	S5FN310	500 %	330	125B	1 7k	20m		160Bt	.90	400			50m	125B	500			Si*	M357c
12#	S5GN310	500 %	330	125B	1 7k	20m		160Bt	90	400			50m	125B	500			Si*	M357a
13#	S5HN310	500 %	330	125B	1 7k	20m		160Bt	90	400			50m	125B	500			Si*	M366a
14#	S5EN300	500 %	340	125B	2 0k	20m		160B	900m	340			50m	125	500			Si*	M307
15▼#	S5HN300	500 %	340	125B	7 2k	10m		160B	900m	340			50m	125	500			Si*	M307
16#	S5EN350	500 %	370	125B	2 0k	20m		160Bt	90	400			50m	125B	500			Si*	M307
17#	S5FN350	500 %	370	125B	2 0k	20m		160Bt	90	400			50m	125B	500			Si*	M357c
18#	S5GN350	500 %	370	125B	2 0k	20m		160Bt	90	400			50m	125B	500			Si*	M357a
19♦#	S5HN350	500 %	370	125B	7 8k	10m		160Bt	900m	400			50m	125B	500			Si*	M366a
20	A396E	500	400	70C	3 3k	8 3m		125C	1 3 Ø	400	25		15m	70C	500			Si	M377a
21#	SR400C10	500	400	100C	10k§	8 3m		150J	1 40	1 2k	25C		30m	150J	500			Si△	S310
22	1N3590	500	400	120C				190J	1 1	520	25C		75m	25C	500			Si	S83a△
23	A390E	500	400	145	4 5k			200J	40	400	130C		15m	130C	500			Si△	M377a
24	400F50	500	400	150C	12k	4 0m		190J	1.1	450	25C		75m	25C	500			Si	M56b△⊘
25	MR1248FB	500	400	150C	8 0k	8 3m		190J	.40 Ø	400	150C		50m	150C	500			Si	M227b⊘
26	MR1248FL	500	400	150C	8 0k	8 3m		190J	40 Ø	400	150C		50m	150C	500			Si	M228a⊘
27	MR1248SB	500	400	150C	8 0k	8 3m		190J	40 Ø	400	150C		50m	150C	500			Si	S199c⊘
28	MR1248SL	500	400	150C	8 0k	8 3m		190J	40 Ø	400	150C		50m	150C	500			Si	S87d⊘
29	450E50	500	450	150C	12k	4 0m		190J	1 1	450	25C		75m	25C	500			Si	S83a△⊘
30	450F50	500	450	150C	12k	4 0m		190J	1 1	450	25C		75m	25C	500			Si	M56b△⊘
31	783K	500	485	130C	5 0k	8 3m		190J	1 9	400	130C		10m⊘	130C	500			Si	
32#	S5GR311	500	490	100B	7 5k			175J	670mØ	490			25m		500			Si△	M522
33#	S5HR311	500	490	100B	7 5k			175J	670mØ	490			25m		500			Si△	M523
34	500UDF50A	500 †	500	130C	9 0k§	8 3m		200J	1 35 †	500 †	130C		30m	130C	500			Si	M448$
35	A295E	500	500	130C	7 0k	8 3m		200J					15mØ	130C				Si	S132a
36	A296E	500	500	130C	7 0k	8 3m		200J					15mØ	130C				Si	S247
37▼#	1S2247	500	600	93C	10k§	8 3m		150J	1 85	1 9k	25C		30m	150J	500			Si△	M565
38#	FD500D10	500	600	93C	10k§	8 3m		150J	1 85	1 9k	25C		30m	150J	500			Si△	M565
39	784K	500	650	150C	8 0k	8 3m		190J	1 3	500	150C		10m⊘		500			Si	
40	MR1268	500	650	150C	12k	8 3m		190J	40 Ø	650	150C		100m	150C	500			Si	M228c⊘
41#	S5BR502	500	750	100B	11k	10m	900	165J	625mØ	700			20m	100B	300			Si△	M429
42#	S5BR501	500	830	100B	16k	10m	850	165J	470mØ	800			20m	100B	500			Si△	M429⊘
43	A540E	500	1 0k		10k			200J	1 08		150C		50m	200J	600			Si△	M463
44	MR2100HA	500 †	1100	150C	18k	8 3m		150A	50 Ø	1 1k	150C	5 0m	100m	150C	50			Si△	M427#⊘
45	A570E	500	1 5k	75C	15k	8 3m		200J	400mØ		130C		50m	200J	500			Si	M463
46#	1S207	550	10	25	40	1		150	1 2	10	25A	10u		25A	500			Si*	A1ce
47	ED3005	550 △	50	50	20	8 3m	1 0	100A	1 5 △	1 0	25	10u	03m	100	500			Si△	A1bk
48	ED3005A	550 △	75	50	25	8 3m	1 0	100A	1 3 △	1 0	25	10u	03m	100	500			Si△	A1bk
49	1N3106	550	75	75A	30			200A				50u			800			Si△	A86
50	ED3005B	550 △	1 0	50	30	8 3m	1 0	100A	1 1 △	1 0	25	10u	03m	100	500			Si△	A1bk
51	LA800	560	75	50A	35			150C	1 0	75	25A	2 0u				899			A1ew
52#	B4Y1-560M	560	1 0	25A	10 †			150J										Si	C113
53	LAA800	560	1 0	50A	50			150C	90	1 0	25A	2 0u				899			A1bc
54#	B4Y2-560M	560	2 0	25A	10 †			150J										Si	C113
55	LAB800	560	2 0	50A	80			150C	1 0	2 0	25A	15u				899			A1bc
56	LAC800	560	3 0	25A	300			150C	1 0	3 0	25A	45u				899			A1ey
57#	B4Y5-560M	560	5 0	25A	20 †			150J										Si	C113
58#	S7BR25	560 †	40	120B	250	20m		140B	1 2	40			20m		560			Si*	S122⊘
59#	S7CR25	560 †	40	120B	250	20m		140B	1 2	40			20m		560			Si*	S123⊘
60#	S7DR25	560 †	40	120B	250	20m		140B	1 2	40			20m		560			Si*	S125⊘
61#	S7ER25	560 †	40	120B	250	20m		140B	1 2	40			20m		560			Si*	S124⊘
62#	S7BR30	560 †	44	125B	250	20m		140B	1 1	44			16m		700			Si*	S122⊘
63#	S7CR30	560 †	44	125B	250	20m		140B	1 1	44			16m		700			Si*	S123⊘
64#	S7DR30	560 †	44	125B	250	20m		140B	1 1	44			16m		700			Si*	S125⊘
65#	S7ER30	560 †	44	125B	250	20m		140B	1 1	44			16m		700			Si*	S124⊘
66#	S7AN70	560 †	77	115B	450	20m		150B	1 0	70			30m		700			Si	F19
67#	S7BR70	560 †	77	115B	450	20m		150B	1 0	70			40m		700			Si	F19
68#	S7AN125	560 †	175	125B	1 1k	20m		150B	1 1	175			30m		700			Si	F19
69#	S20N700JA	560	285	70C	4 5k	10m		150J	1 25	600	25A	5 0m	30m	150C	560			Si△	M378⊘
70	1N256	570	20	135C	1 0			150C	1 5	50	135C		02m	135C	500			Si	S11a
71	G5K3	600		150C	1 5k			175J	1 3	200	25C		5 0m	150C	600			Si	DO8
72	1N885	600	05	25A$	50			200S	60	05			02m		600			Si	A1bz
73	S239	600	50m	25$	15				1 2	80m	25	100u			600			Si	A54
74	P1M5	600	05	50	30			175	1 0	05	25	10u	50m	100	600			Si	M343
75	1N687	600	075	150A	3 0			175A	1.0	20	25A		20m	150A	600			Si	DO7
76	1N874	600	10	25A$	1 0			200S	60	10			02m		600			Si	A1bz
77	10R6B	600	10	25	60			175	2 0	10	25	5 0u	50m	150	600			Si	
78	PS2415	600	10	25A$					2 0	5m	25A	5 0u			600			Si	C15
79	S206⊘	600	100m	25$	15				1 2	150m	25	100u			600			Si	A54
80	S218	600	.10	25$								500u			600			Si	A54
81#	1S1224	600	10	40A	6 0	10m		100J	1 5 △	10	25A	5 0u		25J	600			Si△	
82	P2M5	600	10	50	30			175	1 0	10	25	10u	50m	100	600			Si	M343
83	1N2373	600	10	100A	12	8 3m		150A	3 0	10	100A		100m	100A	600			Si	A1fu
84	1N1406	600	.125	75A	6 0			150	5 0	1 2	25	10u	10m	150A	600			Si	A53
85	1N863	600	15	25A$	1 5			200S	60	15			02m		600			Si	A1bz
86▼#	1S2313	600	150m	25A	10			125J	3 0	200m	25A	10u			600			Si	
87	M71A	600	15	50	50	8 3m		175	1 2		25	10u						Si	A3h
88#	SM150B	600	15	50	32	20m	15	120	1 0	.20	50	10u			600			Si	A138a
89	1N596	600	.15	55A	4 0	1 0m		150A	3 0 △	.17	25	25u△	10m⊘	75A	600			Si	A31x
90#	SH1A	600	15	70A	15	10m		100S	1.0	30	25A	10u	20m	100A	600			Si△	A171
91	CER71A	600	15	75A	48	4 0m		150A	1 2	15	100	10u△	20m	100	600			Si	DO27
92	1N689	600	15	150A	5 0			175A	1 0	40	25A		20m	150A	600			Si	DO7
93	1N852	600	20	25A$	2 0			200S	60	20			.02m		600			Si	A1bz
94	A1G1	600	20	25	60			175A	50		150	1 0u	50m	150	600			Si	A84a
95	A1G5	600	20	25	60			175A	50		150	5 0u	50m	150	600			Si	A84a
96	A1G9	600	20	25	60			175A	50		150	10u	50m	150	600	100	200u	Si	A84a
97	B1G1	600	20	25	60			175A	50		150	1 0u	50m	150	600			Si	A1rx
98	B1G5	600	20	25	60			175A	50		150	5 0u	50m	150	600			Si	A1rx
99	B1G9	600	20	25	60			175A	50		150	10u	50m	150	600	100	200u	Si	A1rx
100#	BY183-600	600	200m	25A	2 0	10m		100J	1 2	100m		1 0u			600			Si△	DO7
101#	M62	600	.20	25A	3 0	10m	25	150A†	1 0	20 †	25		15m	125A	600			Si△	DO7
102	PS060	600	20	25A	3 2	10m		200A	1 0	10	25A		100u⊘	100A	600			Si	A60p
103	TM63	600	20	25C				125C	2 0	20	100C		.30m⊘	100C	600			Si	S145
104	K1G5	600	.20	50	60			150C	2 0	20	25	5 0u	50m	100C	600			Si	
105	P3M5	600	.20	50	30			175	1 0	20	25	10u	50m	100	600			Si	M343
106	AM63	600	20	100C$	8 0 §	8 0m		125A	1 25	20	25C		30m⊘	100C	600			Si	DO4
107	JAN1N256	600	20	135A$	1 0	1		135C	2.0	50	25	20u			500			Si	S11a
108	1N3081	600	20	150A$				175J	1 5	50	25		50m	150	600			Si	A84
109	CODI556	600	.25	25$	20			100	1 1	40	25	10u			600			Si	A52g
110	S36△	600	25	25$	15				1 2	40	25	100u			600			Si	A54

SYMBOLS AND CODES EXPLAINED IN INTERPRETER

5. RECTIFIERS

IN ORDER OF (1) PIV, (2) MAX AVG FWD CURRENT (3) TEMPERATURE, and (4) TYPE No.

LINE No.	4 TYPE No.	1 PIV (V)	MAX AVG FWD DC CURRENT 2 Io (A)	3 at TEMP (°C)	MAX RATINGS @ 25°C SURGE CUR. PEAK 1 Cy (A)	PULSE WIDTH (s)	DISS. (W)	MAX. TEMP (°C)	MAXIMUM FORWARD VOLTAGE DROP Vf (V)	at If (A)	at TEMP (°C)	MAX. REVERSE CURRENT Ir @25°C & Vr (A)	Ir at T & Vr (A)	TEMP T (°C)	TEST VOLT Vr (V)	AVALANCHE RATINGS MAX V BKDN. (V)	MIN SLOPE (A/V)	MAT.	DESCRIPTION DWG No.
1	M71B	600	25	50	50	8.3m		175	1.2		25	10u						Si	A3h
2	CER71B	600	25	75A	48	4.0m		150A	1 2	25	100	10uΔ	.20m	100	600			Si	DO27
3	1N535	600	.30	25A$	3 0	3 0m		150A	2.0	30	25A	20u			600			Si	DO3
4	1N1257	600	30	25A	15			165A	1.0 ∅	.30	25A		.50m	125A	600			Si	A53
5▼#	1S2310	600	300m	25A	30			125J	1.2	500m	25A	10u			600			Si	
6	P4M5	600	.30	50	30			175	1 0	30	25	10u	.50m	100	600			Si	M343
7	1N445	600 †	30	100A	15			150A	1.5	.30	25	2 0u			600			Si	DO2
8	1N606	600	30	100A	2 0	100m		170S	1 5	.20	25	25uΔ			600			Si	DO1
9	1N606A	600	.30	100A	2 0	100m		170S	1.5	40	25	2.5uΔ			600			Si	DO1
10	1N649	600	40	25A	3 0	15m	60	150A	1.0	.40	25	200n	25u	100	600			SΔ	A1
11	1N947	600 ∅	.40	25A	3 0			200	1.0	.40	25		2.0u	25	480			Si	A87
12#	1S115∅	600	.40	25A	8 0			150A	1.0	40	25A	.20u	.01m	100	600			Si	A1
13#	166J2	600	40	25A	3 0	1	60	150A	1.0	40	25A	.50u	.06m	100A	600	1.0k		SiΔ	DO7
14	AM460	600	40	25A				150A	1.2	.40	25A		30m∅	150A	600			Si	DO7
15#	BYX60-600	600	400m	25A	2 5	1.0	600m	125A	1.2	400m	25A	500n	50u	100A	600			SiΔ	DO7
16#	M6HZ	600	40	25C	3 0	10m		150C†	1.0	40 †	25	10u		125A	600		10uΔ	SiΔ	DO7
17	PS460	600	.40	25A	3.3	10m		200A	1.5	.50	25A		50m∅	150A	600			Si	A60p
18	4D6	600	.40	50	20			150A	1 3	1.0	25		.30u	100	600			Si	A52a
19	K2G5	600	40	50	60			150C	2 0	.40	25	5 0u	.50m	100C	600			Si	
20	P5M5	600	40	50	30			175	1.0	.40	25	10u	.50m	100	600			Si	M343
21	AM62	600 †	40	100C$	10 §	8 0m		125A	1 25	.40	25C		.30m∅	150C	600			Si	DO4
22#	MT64	600	.40	100A	2 0	1	50	200A	1.2	.40 †	25		.10m	150A	600			SiΔ	DO7
23	A2G4	600	475	25	40	8.3m		175	1 2	50	25	1.0u	.50m	150	600			Si	A84
24	1N2086	600	50	25$	15			150A	.75 ∅	.50	25	350u∅			600			Si	A53
25	1N3230	600	.50	25$	12				3 3	50			500u	150	600			Si	A1cs
26	BR26†	600	500m	25	20	8 0m		150	1.1	500m	50	5 0u			660			SiΔ	M533
27	CODI5564	600	50	25$	20			100	1.1	.40	25	10u			600			Si	M45
28#	D65C	600	50	25A	30	10m	55	150A	1.2	.50 †	25		15m	125A	600			SiΔ	A100
29#	J600	600	50	25A	10			175A	1.1	50	25A	5 0u		25A	600			SiΔ	DO7
30	MB267	600	50	25	10	8 3m	2 0	175A	1.0	.2 ∅	25	1 0u	.06m	100	600			Si	A60f
31	MT060	600	50	25A	10		50	175A	1.0	50 ∅	25A	200n	25u	150A	600			Si	A60e
32	MT060A	600	50	25A	10		50	175A	1.0	.50 ∅	25A	25n	5.0u	150A	600			Si	A60e
33	S23Δ	600	.50	25	15			150A	1 2	.80	25	100u			600			Si	A54
34	S23A	600	50	25A$	15				1 2	1 2	25	50u			600			Si	A54
35	S30∅	600	50	25$	15			150A	1.2	.80	25	1.0u			600			Si	A54
36	PS160	600	.50	30A	3.3			200A	1.5	.50	25A		.50m∅	150A	600			Si	A47
37	1N5217	600 †	50	40A	50 §			175A	1.2	1.0	75A		.20m	75A	600			Si	A31r
38#	1S1222	600	50	40A	25	10m		120J	.95 Δ	.50	25A	30u		25J	600			SiΔ	
39#	S2E60	600	50	40	25	20m		120	.95	50	25	30u			600	750		Si	A185a
40	.5E6	600	500m	50	50 §			175	1.1	500m	50	2.0u	50u	100	660			SiΔ	DO27
41	5J6	600	500m	50	50 §			175	1 1	500m	50	2.0u	50u	100	660			SiΔ	DO15
42#	60AS	600	.50	50A	15			100A	1.15	.50	25A	10u			600			SiΔ	DO3
43	M71C	600	.50	50	50	8.3m		175	1 2		25	10u						Si	A3h
44	P6M5	600	50	50	30			175	1.0	50	25	10u	.50m	100	600			Si	M343
45#	S05-06	600	500m	50	45	10m		125	1 0	500m	25	10u		25	600				A171a
46#	SE05B	600	.50	50	48	20m	.55	130A	1 1	50	25	10u			600			Si	M98a
47#	SW05B	600	50	50	48	20m	.55	120	1 1	50	50	10u			600			Si	A221d
48#	SD1A	600	50	60A	45	10m		100S	1.0	1.5	25A	10u			600			SiΔ	A221b
49#	1S1944	600	500m	65A	35			125J	1.2	500m	25A		400m	125J	600			Si	A1bs
50#	1S1232	600	50	70	35	10m		150	1 1	1.0	25	10u		25	600			Si	DO1
51	1N3750	600	.50	75A	20	8.0m		150A	1 5	.50	25A	5.0u			600			Si	A1cm
52▼	40808	600	500m	75A	35	8 3u	500m	175A	1 2	1 0	25J	5 0u	200u	150J	600	1.1k		Si	DO26
53	CER71C	600	50	75A	48	4.0m		150A	1.2	.50	100	10uΔ	.20m	100	600			Si	DO27
54	1T506	600 †	.50 ∅	85A	35			100A	1 2	30	25	10u	.25m	100	600			Si	A3x
55	2T506	600 †	.50 ∅	85A	35			100A	1 2	30	25	10u	.25m	100	600			Si	DO1
56	3T506	600 †	.50 ∅	85A	35			100A	1.2	30	25	10u	.25m	100	600			Si	DO13
57	4T506	600 †	50 ∅	85A	35			100A	1 2	30	25	10u	25m	100	600			Si	DO7
58	ERD600	600 †	.50 ∅	85	35			100A	1 2	30	25	10u	.25m	100	600			Si	M166
59	1N555	600 †	50	100A	4.0	3 0m		150A	1 5	.50	25A	5.0u			600			Si	DO4
60	60M	600	50	100A	30	4 0m		150	1.5			2 0m			600			Si	F22
61	60S5	600	.50	100				175J	1 3	1 8	25C		2 0m	25C	600			Si	S41b
62	S256	600	500m	100$	60				1.2	800m	25		500u	100	600			Si	A54
63	TKF60	600	50	100A	30	8.3m		175A	1.1	1.0	25A	10u	.50m∅	100A	600			Si	A84
64	1N3084	600	50	150A	15			200A	1.0	.75	25A		.20m	150A	600			Si	A84
65	JAN1N3191	600	50	150A$	30	8 3m		175A	1 0	.75	25	5.0u	50m	150A	600			Si	A31a
66	1N3549	600	.60	25A	15			200A	1 0	.50	25A	.20u	75m	175A	600			Si	A1
67	A2G1	600	60	25	60			175A	50		150	1.0u	.50m	150	600			Si	A84a
68	A2G5	600	60	25	60			175A	50		150	5.0u	50m	150	600			Si	A84a
69	A2G9	600	60	25	60			175A	.50		150	10u	.50m	150	600	100	200u	Si	A84a
70	B2G1	600	.60	25	60			175A	.50		150	1 0u	.50m	150	600			Si	A1rx
71	B2G5	600	60	25	60			175A	50		150	5.0u	.50m	150	600			Si	A1rx
72	B2G9	600	60	25	60			175A	50		150	10u	.50m	150	600	100	200u	Si	A1rx
73	ER61	600	600m	25A	15			150A	1.25	500m	25		75u	100	600			Si	A3t
74	1N1697	600 †	.60	50A	20			115A	60	25	100A		.50m∅	100A	600			Si	DO3
75#	5D6	600	.60	50A	40	10m		150S	1.2	3.0	25A		50m	100	600			Si	A1bp
76	K3G5	600	.60	50	60			150C	2.0	.60	25	5 0u	.50m	100C	600			Si	
77	P7M5	600	.60	50	30			175	1 0	.60	25	10u	.50m	100	600			Si	M343
78	SD96	600	.60	50	11			125A	1.3	75	25							Si	A6a
79	SM260	600	600m	50$	20			150	1.2	950m	25	10u			600			Si	A84
80	5MA6	600	.625	100	50			140J	92	.63	25		20m	100	600			Si	F29
81#	R6	600	65	60A	50			130A	1.2	.65	25A	10u		25A	600			SiΔ	DO29
82	1N1492	600 †	75	25A	15			120A	55 ∅	25	120A		.30m∅	120A	600			Si*	DO3
83	1N2071	600	.75	25A	22			100A	1.2	.50	25A	10u	20m	100A	600			Si	A1es
84	1N2071A	600	.75	25A	22			100A	1.0	50	25A	5.0u	.50m	100A	600			Si	A1es
85	1N3241	600	750m	25$	15				2.2	750m			500u	150	600			Si	A1cs
86	1N3658	600	75	25A	15			200A	1.2	50	25A	10u	30m	100A	600			Si	A60
87	75R6B	600	.75	25	60			175	2.0	.75	25	5.0u	50m	150	600			Si	
88#	1096J2F	600	.75	25A	15	10m		150A	50 ∅	25	150A		.30m∅	135A	600			Si	DO13
89	A3G1	600	75	25	60			175A	.50		150	1 0u	.50m	150	600			Si	A84a
90	A3G5	600	.75	25	60			175A	.50		150	5.0u	.50m	150	600			Si	A84a
91	A3G9	600	.75	25	60			175A	.50		150	10u	.50m	150	600	100	200u	Si	A84a
92	B3G1	600	75	25	60			175A	.50		150	1.0u	.50m	150	600			Si	A1rx
93	B3G5	600	.75	25	60			175A	.50		150	5.0u	.50m	150	600			Si	A1rx
94	B3G9	600	.75	25	60			175A	.50		150	10u	50m	150	600	100	200u	Si	A1rx
95	BR46†	600	750m	25	20	8.0m		150	1 1	750m	25	5.0u			660			SiΔ	M533
96	CODI536	600	750m	25$	35			150	1 1	800m	25	1.0u			600			Si	A52g
97	CODI616	600	750m	25$	35			150	1.1	800m	25	1.0u			600			Si	A9j
98	MB256	600	750m	25	15	8.3m	2.0	175A	1.0	400m∅	25	200n	15u	100	600			Si	A60f
99	MB268	600	.75	25	15	8 3m	2 0	175A	1.0	.4 ∅	25	1.0u	.06m	100	600			Si	A60f
100	MB275	600	750m	25	15	8.3m	2 0	175A	1.2	500m∅	25	2.0u	75u	100	600			Si	A60f
101	PT560	600	750m	25A	15	8.0m		125A	1 5	500m	25A		500u∅	100A	600			Si	DO2
102	TS6	600	.75	25A	25			125	1.2	.75	25A	5.0u						Si	A1ev
103	UPI2071	600	750m	25A	22			100A	1 2	500m	25A	10u	200u	100A	600			Si	A1bg
104	UPI2071A	600	750m	25A	22			100A	1.0	500m	25A	5 0u	500u	100A	600			Si	A1bg
105	UT118	600	750m	25A	15	8 3m	1.0		1.2	500m∅	25A	2 0u	75u	100A	600			Si	A146f
106	UT215	600	750m	25A	15		1 0	175A	1 0	400m	25	200n	15u	100A	600			Si	A146f
107	XS23	600	75	25	15							100u			600			Si	A54
108	XS23A	600	.75	25	15							50u			600			Si	A54
109#	ZR66	600	750m	25$	23			150	1.1	750m	25	10n			600			Si	A42
110#	ZS176	600	750m	25A	70 §			150A	1.2	750m	25A	5.0u	150u	100A	600			Si	A52f

SYMBOLS AND CODES EXPLAINED IN INTERPRETER

5. RECTIFIERS

IN ORDER OF (1) PIV, (2) MAX AVG FWD CURRENT (3) TEMPERATURE, and (4) TYPE No.

LINE No.	4 TYPE No.	1 PIV (V)	MAX AVG FWD DC CURRENT 2 Io (A)	3 at TEMP (°C)	MAX RATINGS @ 25°C SURGE CUR. PEAK 1 Cy (A)	PULSE WIDTH (s)	DISS. (W)	MAX. TEMP (°C)	MAXIMUM FORWARD VOLTAGE DROP Vf (V)	at If (A)	at TEMP (°C)	MAX. REVERSE CURRENT Ir @25°C & Vr (A)	Ir at T & Vr (A)	TEMP T (°C)	TEST VOLT Vr (V)	AVALANCHE RATINGS MAX V BKDN. (V)	MIN SLOPE (A/V)	DESCRIPTION MAT.	DWG. No.
1	1N445B	600 †	75	30A	15			165A	1.5	.75	25A	2 0u	200m	150A	600			Si△	DO3
2	1N1096	600	75	30A	15			165A	50 ∅	25	150A		.30m∅	150A	600			Si	DO3
3	7E6	600	750m	50	60 §			175	1 1	750m	25	2.0u	50u	100	660			Si△	DO27
4	7J6	600	750m	50	60 §			175	1 1	750m	25	2.0u	50u	100	660			Si△	DO15
5	1N547	600 †	75	50A	15	8.0m		150A	1 1	25	150A		35m⊠	150A	600			Si	DO3
6	1N1653	600 †	75	50A	15			165A	50 ∅	25	150A		.30m∅	150A	600			Si	A53
7	1N2096	600 †	.75	50A	15			100A	50 ∅	50	85A		25m∅	85A	600			Si△	M21
8	1N2615	600	75	50A	30			175A	1 1	50	25A	10u	.50m	150A	600			Si	A31a
9	1N4369	600	75	50A	35	2.0m		175	1 1	75	25	1 0u	30m	175	600			Si	DO3
10#	1S036	600	75	50A	40			150A	1.25		25A	2 0u			600			Si△	A89
11#	1S45	600	75	50A	25			150J	1 2	1 0	25A	5 0u	35m	150A	600			Si△	DO1
12#	1S105⊠	600	75	50A	40			150A	1 0		150A	10u			600			Si△	A89
13#	6G8	600	75	50A	15			150A	1 1	75	25A	2 0u			600			Si△	DO3
14	A3G3	600 †	75	50A	35			175A	1 1	.50	25	10u△	.30m⊠	150	600			Si	A84
15	A600	600	.75	50	15		1 0	100	1.0	75	25	5.0u			600			Si	A3p
16	CER71F	600	.75	50A	50	8 0m		175A	1 2	75	25	10u			600			Si	F29
17	DK756	600	750m	50A	60			175A	1 2	750m	25A	10u	100u	100	600			Si	DO27
18	H600	600	75	50	15		1 0	175	1 0	75	25	5 0u			600			Si	DO3
19	M71	600	.75	50	50	8 3m		175	1 2		25	10u						Si	A3h
20#	P600A	600	.75	50	50	10m		150	1 0	1.0	25	10u			600			Si	DO29
21#	S1B	600	75	50	48	20m	83	120	1 1	75	50	10u			600			Si	A6a
22	SD96A	600	.75	50	17			125A	1 2	75	25							Si	A6a
23	SM60	600	75	50$	35			175†	1 1	50	25	10u			600			Si	A84
24#	SW1B	600	.75	50	48	20m	83	120	1.1	75	50				600			Si	
25	TK60	600	750m	50A	15			175C	1 2	500m	25		300u⊠	150	600			Si	A84
26	1N1105	600	75	55A	15	8 0m		175A	1 5	12	25A		.30m	150A	600			Si	DO1
27	1N2484	600	.75	55	30			150A	1 2	.75	55		1.0m	55	600			Si	A3c
28	1N2489	600	75	55A	75	4.0m		150				1.0m			600			Si	A6b
29	1N3279	600	75	70A	25	8 0m		150A	1.2	75	25	5 0u			600			Si	A1cm
30	1N2864	600	750m	75A	16			125A	1 2	500m	75A		300u∅	100A	600			Si	DO1
31	1N3195	600	75	75A				100A	1 2	50	25A	5 0u	.20m	75A	600			Si△	A50
32	1N3255	600	75	75A				100A	1 2	50	25A	5 0u	.20m	75A	600			Si△	A50a
33	1N3641	600	75	75A	40			100	1 2	75	25	10u			600			Si	DO13
34	CER71	600	75	75A	48	4 0m		150A	1 2	75	100	10u△	20m	100	600			Si	DO27
35	DI649	600	.75	75A	25			150A	1 2	1 2	25	20u	.01	00	600			Si	A1bn
36	S86	600	750m	80$	15				1 2	1 2	25	20u			600			Si	A54
37	AM060	600	750m	150A				150A	1 0	25m	25A		300u⊠	150A	600			Si	DO7
38#	D6HZ	600	80	25A	30	10m		150A	1 2	80 †	25	10u		125A	600	1 0k		Si△	A100
39#	D68	600	.80	25A	30	10m	1 0	150A	1 2	80 †	25		15m	125A	600			Si△	A100
40	EM406	600	80	25	50				1 1	80	25	10u	.20m	85A	600				A1bg
41	PE406	600	80	35A$	50			135A	1 1	80	25	10u	20m∅	85A	600			Si	A3w
42#	SR1FM12	600	800m	40A	50			130J	1 2 †§	3 0	25A	10u	300u	130J	600				A1bv
43#	OY1021	600	80 ∅	45A	60	10m		130J	1 3	5 0	25	100u		25	400			Si	M42
44#	1S1346	600	80	50A	40	8 3m		150J	1 2	3 0	25A	10u∅	50m∅	150J	600			Si△	A89b
45	8D6	600	80	50	40			150A	1.1	1.0	25		.20u	100	600			Si	A52a
46	K4G5	600	80	50	60			150C	2 0	80	25	5 0u	50m	100C	50			Si	
47#	SR1C12	600	800m	50A	40 §	8 3m		150J	1 2	3 0	25A	10u	500u	150J	600			Si△	A34d
48#	DH4R6	600	80	55	45	8.3m		115	.60 ∅	.40	85		.40m	85	420			Si	M152
49▼#	1S2306	600	800m	65A	60			150J	1.8	4 0	25A	10u			600			Si	A56a
50	1N614	600	80	100A	3 0	8 3m		150A	1 5	20	25A	25u△			600			Si	DO4
51	1N614A	600	80	100A	3 0	8 3m		150A	1 5	.40	25A	2 5u△			600			Si	DO4
52	A4G1	600	85	25	60			175A	.50		150	1 0u	.50m	150	600			Si	A84a
53	A4G5	600	.85	25	60			175A	50		150	5.0u	.50m	150	600			Si	A84a
54	A4G9	600	85	25	60			175A	.50		150	10u	.50m	150	600	100	200u	Si	A84a
55	B4G1	600	.85	25	60			175A	.50		150	1 0u	50m	150	600			Si	A1rx
56	B4G5	600	85	25	60			175A	50		150	5 0u	.50m	150	600			Si	A1rx
57	B4G9	600	.85	25	60			175A	50		150	10u	.50m	150	600	100	200u	Si	A1rx
58#	SSIB0540	600	.85	45A	50	10m		150J	1 0	1 0	25J	1 0u			600			Si△	M441
59	SM160	600	850m	50$	45			150	1 0	1.5	25	10u			600			Si	A84
60	SM760	600	.85	50	35			150A	1.0	.50	25	.01u	20m	150	600			Si	A84
61	TM66	600	.95	35C				175A	2.0	20	25		.50m∅	150	600			Si	DO4
62	ST16	600	.95	55A	75	4 0m		100A	1.0			1 0m			600			Si	C23
63	NS1006	600	1 0		60	8 3m			1.2	1 0		10u			600				
64	1N2270	600	1 0	25$	20			150	600m	1 0	25		350u	150	600			Si△	DO4
65	1N2271	600	1 0	25$	20			150	600m	1 0	25		350u	150	600			Si△	S35
66	1N3250	600	1 0	25$	20				1 1	1 0			500u	150	600			Si	A1cs
67	100R6B	600	1 0	25	60			175	2 0	1 0	25	5 0u	50m	150	600			Si	
68#	O704	600	1 0	25	30	10m		125J	1 1	1 0	25	5 0u			600			Si	A1bu
69	A5G1	600	1 0	25	60			175A	50		150	1 0u	50m	150	600			Si	A84a
70	A5G5	600	1 0	25	60			175A	.50		150	5 0u	.50m	150	600			Si	A84a
71	A5G9	600	1 0	25	60			175A	.50		150	10u	.50m	150	600	100	200u	Si	A84a
72	B5G1	600	1 0	25	60			175A	50		150	1.0u	50m	150	600			Si	A1rx
73	B5G5	600	1 0	25	60			175A	50		150	5 0u	50m	150	600			Si	A1rx
74	B5G9	600	1.0	25	60			175A	50		150	10u	50m	150	600	100	200u	Si	A1rx
75	BR56†	600	1.00	25	25	8 0m		150	1 10	1 0	25	5 0u			660			Si△	M533
76	BR86B†	600	1 00	25	50	8 0m		150	1.10	1 0	25	5 0u			660			Si△	M535
77#	E6HZ	600	1.0	25A	30	10m			1 2	1.0	25A		200u	125A	600	1 0k		Si	A1em
78#	E61	600	1 0	25A	50	10m		150A	1 2	1.0 †	25A	1.0u	200u	125A	600			Si△	DO29
79	EM506	600	1.0	25	50				1.1	1.0	25	1 0u	10m	100A	600				A1bg
80	MB249	600	1 0	25	20	8.3m	2 0	175A	1 0	600m⊠	25	1 0u	75u	100	600			Si	A60f
81	NPC0600	600	1.0	25	25			150A	1 1	1.0	25	30u						Si	A3n
82	S1060	600	1 0	25A	35			175A	50 ∅	25	150A		50m∅	150A	600	900		Si△	A1gf
83	SD6	600	1 0 ∅	25A	50			100A	1 0	1 0	25A	5.0u			600				A1ev
84	SLA17AB	600	1.0	25	60	8.3m		150A	1.0	1 0	25	1 0u	10m	100	600			Si	A69
85	SLA17C	600	1 0	25	60	8 3m		150A	1 1	1.0	25	5.0u	25m	100	600			Si	A69
86	UT238	600	1.0	25A	20	8 3m	4 0	175A	1 0	400m⊠	25A	2 0u	75u	100A	600			Si	A60
87	PE506	600	1.0	35A$	60			135A	1 1	1.0	25A		25m∅	100A	600			Si	A3w
88	1N5007	600 †	1 0	40A	35 §			150A	1 3 †	1 0	40A		1 0m	40A	600			Si	DO13
89	1N5213	600 †	1 0	40A	50 §			175A	1 2	1 0	75A		.20m	75A	600			Si	A31q
90	VE67†	600 †	1.0	40	25	8.3m		150	1.2	1.0	40	10	10	150A	600	1 1k		Si△	M548
91	VE68†	600 †	1.0	40	25	8 3m		150	1.2	1 0	40	10	10	150A	600			Si△	M548
92	1B6	600	1.0	50C$	11			150C	2 0	1 0	25	2 0u	.05m	100	600			Si	M79
93	1C6⊠	600	1 0	50C$	11			150C	2 0	1 0	25	2.0u	05m	100	600			Si	M116a
94	JAN1N4385	600 $	1 0	50A	50	8 3m		200A	1 2 †	3 0	25	1.0u	200u	150	600			Si	DO29
95#	1S846	600	1.0	50	50	10m			1 0	1 0	25A		.80m	150J	600				A200
96#	1S1064	600	1 0	50A	60	10m	1.0	150A	1 0	1 5	25	10u	.10m	25	600	950		Si	A52j
97	10C6△	600 †	1.0	50A				175A	1 2 △	1 0	25A	10u						Si	A50
98	A5G2	600	1 0	50	60	8 3m		175	1.0	1 0	25	10u	.50m	150	600			Si	A84
99	AA600	600	1.0	50	15		1.0	100	90	1.0	25	5.0u			600			Si	A3p
100	BTB600	600	1 0	50	50	8 0m		150A	1 1	1 0	50	10						Si	DO27
101	BTM600	600	1.0	50	30	8 0m		150A	1 1	1 0	50	10						Si	A1ry
102#	BY134	600	1 0	50A	50			150J	1.3	2 0	25J	5.0u			650			Si△	A171d
103#	BYY34	600	1.0	50A	50			150J	1 3	2.0	25J	5.0u			600			Si△	DO13
104	CJ6	600	1 0	50	50			150	1 1	1 0	50	5 0u	200u	100	660			Si△	DO15
105	CL6	600	1.0	50A	50			150A	1.1	1 0	50A	5.0u	200u	100A	660			Si△	DO27
106	CM6	600	1.0	50	50			150	1 1	1.0	50	5 0u	200u	100	660			Si△	DO27
107	E6	600	1.0	50	75 §			175	1 1	1 0	25	2.0u	50u	100	660			Si△	DO27
108	EM6	600	1.0	50	75 §			175	1.1	1 0	25	2.0u	50u	100	660			Si△	DO41
109♦#	F14F	600	1.0	50A	45			175J	1 0	1 0	25	50u	300u	100	600			Si	A249a
110	HA600	600	1.0	50	15		1.0	175	.90	1.0	25	5.0u			600			Si	DO3

SYMBOLS AND CODES EXPLAINED IN INTERPRETER

5. RECTIFIERS

IN ORDER OF (1) PIV, (2) MAX AVG FWD CURRENT (3) TEMPERATURE, and (4) TYPE No.

LINE No	4 TYPE No.	1 PIV (V)	MAX AVG FWD DC CURRENT 2 Io (A)	3 at TEMP (°C)	MAX RATINGS @ 25°C SURGE CUR. PEAK 1 Cy (A)	PULSE WIDTH (s)	DISS. (W)	MAX. TEMP (°C)	MAXIMUM FORWARD VOLTAGE DROP Vf (V)	at If (A)	at TEMP (°C)	MAX. REVERSE CURRENT Ir @25°C & Vr (A)	Ir at T & Vr (A)	TEMP T (°C)	TEST VOLT Vr (V)	AVALANCHE RATINGS MAX V BKDN. (V)	MIN SLOPE (A/V)	DESCRIPTION MAT.	DWG. No.
1	K5G5	600	1 0	50	60			150C	2 0	1 0	25	5.0u	50m	100C	600			Si	
2#	M9257C	600	1 0	50A				150A	1 0	1 0	25A		50m	150A	600			Si	
3#	PA600	600	1 0	50A	50			175A	1.0	1 0	25A	5 0u		25A	600	1 0k		Si△	DO29
4▼#	PCP6†	600	1 0	50	50			125S	2.0	1 0	25	10	100u	150	600			Si	M584
5	PF60†	600	1 0	50	50	8 3m		125	1 0	1 0	25	5 0u			600			Si	M544
6	TA600	600	1 0	50	15		1 0	100	90	1.0	25	5 0u			600			Si	M21
7♦	1N4247	600	1 0	55A	25	8 3m		160A	1 2	1 0	55A	1 0u	25u	125	600			Si	A1tc
8	CE506	600	1 0	55A$	50			150A	1 1	1 0	25		.10m	100	600			Si	A1cs
9	S16⊘	600	1 0	55A	50	8 3m		150A	1 0	1.0	25A	10u	50u	100A	600			Si	A1sd
10	SC6	600	1 0	55$	50			175	1 2	1 0	25	1 0u	50u	125	600			Si	A1bs
11	SCA6	600	1 0	55$	50			175	1 2	1 0	25	1 0u	500u	125	600	960		Si	A1bs
12	SCE6	600	1 0	55$	50			175S	1 0	1 0	25	1 0u	50u	125	600				A1sd
13	SEN160	600	1 0	55	50	8 3m		170A	1 0	1 0	25	5 0u	300u	150	600			Si△	DO15
14#	SH4D6	600 ∅	1 0	55A	45	8 3m		115	60 ∅	50	85		40m∅	85	420			Si	M215
15	1N3868	600	1 0	60A	10 §			200A	1 1	1 0	25	10n	5 0u	125	600			Si	A1ds
16#	BY127/600	600	1 0	60A	40	10		150J	1 5	5 0	25J	10u			900			Si	DO27
17#	1S1888	600	1 0	65A	60			150J	1 2	1 5	25A		400m	150J	600			Si	A1jw
18	1N3759	600	1 0	70A	30			150A	1 0	1 5	25	5 0u			600			Si	A1cm
19	1D6	600	1 0	75C	35			150C	2 0	1 0	50C	2 0u	05m	100C	600			Si	M116*
20	1N2864A	600 †	1 0	75A	40			135	1 2	1.0	75A		50m	135	600			Si	DO1
21♦	1N4005	600	1 0	75A	30	8 3m		175A	1 6	1 0	75A	10u	30u∅	75A	600			Si	DO41
22	1N5061	600 †	1 0	75A	50 §			175A	1 2	1 0	75A		10m	75A	600			Si	A94g
23	5A6	600	1 0	75A	50	8 3m			95	1 0	25A	10u						Si	DO27
24	10D6	600	1 0	75A	50	8 3m			95	1 0	25A	10						Si	DO39
25	CA102MA	600	1 0	75A	15			150A	1 2	1 0	25C		3 0m∅	125C	600			Si	A32
26	CB60	600	1 0	75A	50	8 0m		175A	1 1	1.0	25A	2.0u	05m	100	600			Si△	A1bg
27	CC102MA	600	1 0	75A	15			150A	1.2	1 0	25C		3 0m∅	125C	600			Si	C8
28	CF102MA	600	1 0	75A	1 5			150A	1 2	1 0	25C		3 0m∅	125C	600			Si	F8
29	CP102MA	600	1 0	75A	15			150A	1 2	1 0	25C		3 0m∅	125C	600			Si	C9
30	ER185	600	1 0	75A	30 §			175J	1 1	1 0	25A	10u	.50m∅	75A	600			Si	DO27
31▼	GER4005	600	1 0	75	30			175	1.1	1 0	25	100u						Si	A249b
32▼	HEP158-RT	600	1 0	75$	30			175†										Si	DO41
33▼	HEP178-RT†	600	1.0	75$	32													Si	M604*
34	J6	600	1.0	75A	50	8 0m	1 0	175A	1 0	1.0	25A	5 0u	50u	100A	600			Si	DO15
35	MR2068	600	1 0	75	30	8 3m		175J	80 ∅	1 0	25	25u	.50m	75	600			Si△	A1ba
36	1F6	600	1.0	100	50		1 0	150C	1 3	2 0	25	2 0u	50u	100	660			Si△	F22
37	1N3191	600	1 0	100C	30	8 3m		175C	1 0	.75 †	25C	5 0u	50m	150C	600			Si	A31a
38	1N4385	600 †	1.0	100A	50			175A	1 3	1 0	100		25m	150	600			Si	DO29
39	G100J	600 †	1 0	100A	70			175A										Si	A50b
40	MR600	600	1 0	100A	50	8 0m		150A	1 0	1 0	25A	2.0u	100u	100	600			Si	A1dk
41	R600	600	1 0	100	50 §	8 0u		150A	1 0	1 0 †	25	2 0u△	100u	100	600			Si	
42	SI600E	600	1 0	100A	50			150C	1 0	1 0	25A	5 0u			600			Si	DO27
43	SLA600LCD†	600	1 0	100					1 0	1 0		1 0u	100u	100	600			Si	M547
44	SM516	600	1 0	100$	45			150†	1 0	1 0	25	10u			600			Si	A84
45	1N2031	600 †	1 0	150C	25	8 3m		175C	2 0	2 0	25		50m	150C	600			Si	DO4
46	AM64	600	1 0	150C$	20 §	8 0m		175A	1 25	1 0	25C		50m	150C	600			Si	DO4
47	BY107	600	1.0	150C$	25			150C	90	1 0	25C	4 0u	.50m	150C	600			Si	DO2
48	BY117	600	1 0	150C$	25			150C	80	1 0	25C	1.0u	10m	150C	600			Si	DO2
49	BY127⊘	600	1 0	150C$	25			150C	1 0	1 0	25	10u	1.0m	150C	600			Si	DO2
50	E1K3	600	1 0	150	200			175	1 3	1 0	150	10u	1 0m	150	600			Si	DO4
51#	DS0 5A1	600	1.1	25J	60	10	97	150	1 4	3.3	25J	1 0m	2 0m	150	400			Si	Z3
52#	DS1.2A6	600	1 1	25J	60	10m	970m	150	1 40	3 3	25J	1 0m	2 0m	150	400			Si	
53#	SD96S	600	1 1	40A	40	10m		170A	1 0	.60	25A	50u	200m	150A	200			Si	DO3
54#	SSiB0640	600	1 1	45A	50	10m		160J	1 0	2 0	25J	1 0u			600			Si△	A3v
55#	SSiC1740	600	1 1	45A	100	10m		150J										Si△	M441
56	HC71F	600	1 1	50A	50	8 0m		175A	1 2	1 1	25	10u			600			Si	F29
57	MH71	600	1 1	50	50	8 3m		175	1 2		25	10u						Si	A3h
58	HC71	600	1 1	75A	75	4 0m		150A	1 2	1 1	100	10u△	20m	100	600			Si	DO27
59	A6G1	600	1 2	25	60			175A	50		150	1 0u	50m	150	600			Si	A84a
60	A6G5	600	1 2	25	60			175A	50		150	5 0u	50m	150	600			Si	A84a
61	A6G9	600	1 2	25	60			175A	50		150	10u	50m	150	600	100	200u	Si	A84a
62	B6G1	600	1 2	25	60			175A	.50		150	1 0u	50m	150	600			Si	A1rx
63	B6G5	600	1 2	25	60			175A	50		150	5 0u	50m	150	600			Si	A1rx
64	B6G9	600	1 2	25	60			175A	50		150	10u	50m	150	600	100	200u	Si	A1rx
65#	DD2327	600	1 2	25	45	10m		150	1 0	1 0	25	1 0u	200m	150	600			Si	
66#	ZR68	600	1 2	25$	58	1 0m		150A	1 1	750m	25	10n			800			Si	A42
67	K6G5	600	1 2	50	60			150C	2 0	1 2	25	5 0u	50m	100C	600			Si	
68#	1S1890	600	1 2	65A	60			175J	1 2	1 5	25A		400m	175J	600			Si	A56b
69	TM62	600	1 25	25C				125C	2 0	80	25		30m⊘	100C	600			Si	S145
70	UT247	600	1 25	25A	20	8 3m	4 0	175A	1 0	500m⊘	25A	2 0u	75u	100A	600			Si	A60
71	TM65	600	1 25	35C				175C	2 0	.80	25		50m	150	600			Si	S145
72#	SSiB0140	600	1 25	45A	50	10m		180J	1 1	2 5	25J	1 0u			600			Si△	A31v
73#	F61	600	1 3	25A	70	10m		150A†	1 2	1.3 †	25		20m	125A	600			Si△	DO13
74#	F61Z	600	1 3	25A	70	10m	1 3	150A†	1 2	1 3 †	25	10u		25A	600	1 0k	2 5u	Si△	DO13
75	RA132MA	600	1 3	55A$	60			150A	1 2	1 3	25		30m∅	150	600			Si	A34
76#	BY173	600 $	1 4	50A	40	10m		150A	1 2	1.0	25	1 0u		25	600			Si△	DO27
77	1N1913	600 ∅	1 5	25A	30	16m	2.0	250	1 0	1.0	25	10u			600			Si△	A86
78	1N2220	600	1 5	25$	20			150	600m	1 5	25		500u	150	600			Si△	DO4
79	1N2221	600	1 5	25$	20			150	600m	1.5	25		500u	150	600			Si△	S35
80	1N2650	600	1.5	25A	15	8 3m		165A	2 6	1 5	25A	300u			600			Si	M125
81#	1S025	600	1.5	25A	125			150A	1 25	5 0	25A		05m	100C	600			Si△	A89
82#	1S156	600	1.5	25A	15			120	1 3 △	1 0		5.0u△			600			Si*	S42
83	150R6B	600	1 5	25	60			175	2 0	1 5	25	5 0u	50m	150	600			Si	
84	A7G1	600	1 5	25	60			175A	50		150	1 0u	50m	150	600			Si	A84a
85	A7G5	600	1 5	25	60			175A	.50		150	5 0u	50m	150	600			Si	A84a
86	A7G9	600	1 5	25	60			175A	50		150	10u	50m	150	600	100	200u	Si	A84a
87	A121-6†	600	1.50	25	25	8 0m		150	1 10	1 0	25	5 0u			660			Si△	M531
88	A132-6†	600	1.50	25	50	8 0m		150	1 10	1 0	25	5 0u			660			Si△	M532
89	A168-6†	600	1 5	25	50	8 0m		125	1 1	1 0	25	5 0u			660			Si	M575
90	B7G1	600	1 5	25	60			175A	50		150	1 0u	50m	150	600			Si	A1rx
91	B7G5	600	1 5	25	60			175A	50		150	5 0u	.50m	150	600			Si	A1rx
92	B7G9	600	1 5	25	60			175A	50		150	10u	.50m	150	600	100	200u	Si	A1rx
93	BR86D†	600	1 50	25	50	8 0m		150	1 10	1 0	25	5 0u			660			Si△	M536
94	CODI5364	600	1 5	25$	35			150	1 1	800m	25	1 0u			600			Si	M45
95	M1G1	600	1.5	25	250			175A	50		150	2 0u	5.0m	150	600			Si	A1ep
96	M1G5	600	1.5	25	250			175A	50		150	10u	5 0m	150	600			Si	A1ep
97	M1G9	600	1 5	25	250			175A	50		150	10u	5 0m	150	600	100	200u	Si	A1ep
98	MB241	600	1.5	25	25	8 3m	2 0	175A	1 0	800m⊘	25	200n	15u	100	600			Si	A60f
99	PS2346	600	1.5	25A$				175A	1 0	20	25A	6 0u			600			Si	M22
100#	SA6M1	600	1.5	25A	47		2 0	150A	2.0	10	25J	10u	300u	150J	600	750 ∅		Si△	DO27
101	SI6	600	1 5	25A	80			150C	1.0	1 5	25A	1 0u			600			Si	A1bc
102	UT257	600	1 5	25A	25	8 3m		175A	1.0	750m⊘	25A	2.0u	75u	100A	600			Si	A60
103#	ZS276	600	1 5	25A	70 §			150A	1 2	1 5	25A	5 0u	150u	100A	600			Si	A52f
104#	BYX22-600	600	1 5	30A	55	8 3m		150A	2 4	15	25A				600			Si	A163
105	SCBR6	600	1 5	30C	20			150										Si	M45a*
106#	SL603M	600	1 5	30A	30	2 0m		125C	1 34	7 5	25A	5.0u	110u	100C	600			Si△	S33
107	1N4822	600 †	1 5	40	50			170	1 3	1 5	40		25m	40	600			Si	DO27
108#	1S923⊘	600	1.5	40A	80	10m		150J	1 05 △	1 5	25A		27m	150J	600			Si△	A56
109#	S2A60	600	1.5	40A	80	10m		150J	1 05 △	1 5	25A		27m	25A	600			Si△	A56
110#	S8M1	600	1.5	40A	47		2.0	170A				10u	300u	150	600			Si△	DO27

SYMBOLS AND CODES EXPLAINED IN INTERPRETER

5. RECTIFIERS

IN ORDER OF (1) PIV, (2) MAX AVG FWD CURRENT (3) TEMPERATURE, and (4) TYPE No.

LINE No.	4 TYPE No.	1 PIV (V)	MAX AVG FWD DC CURRENT 2 Io (A)	3 at TEMP (°C)	MAX RATINGS @ 25°C SURGE CUR PEAK 1 Cy (A)	PULSE WIDTH (s)	DISS. (W)	MAX. TEMP (°C)	MAXIMUM FORWARD VOLTAGE DROP Vf (V)	at If (A)	at TEMP (°C)	MAX. REVERSE CURRENT Ir @25°C & Vr (A)	Ir at T & Vr (A)	TEMP T (°C)	TEST VOLT Vr (V)	AVALANCHE RATINGS MAX V BKDN. (V)	MIN SLOPE (A/V)	DESCRIPTION MAT.	DWG. No.
1	1N2852	600 †	1 5	50C	15			150A	65 Ø	50	150C		30mØ	150C	600			Si*	S35
2#	1S1074	600	1 5	50A	60	10m	1 0	150A	1 0	1 5	25	10u	10m	125	600	950		Si	A52j
3	1 5E6	600	1 5	50A	75 §			175A	1 1	1.5	25A	2 0u	50u	100	660			SiΔ	DO27
4	1 5J6	600	1 5	50	75 §			175	1 1	1 5	25A	2 0u	50u	100	660			SiΔ	DO15
5	DRS106	600	1 5	50A	50 §	8 3m		125A	1 0	1 0	25A	10u	200u	125A	600			Si	A168c
6	K7G5	600	1 5	50	60			150C	2 0	1 5	25	5 0u	50m	100	600			Si	
7	P100J	600	1 5	50	50	8 0m	1 0	170	1 0	1 0	25	5 0u						Si	DO27
8	P150J	600	1 5	50	50	8 3m	1 0	150	1 0	1 0	25	5 0u							DO27
9#	SE1.5B	600	1 5	50	63	20m	1 6	120	1 1	1 5	50				600			Si	M99a
10	1N1568	600	1 5	55C	70	8 3m		175A	1.2	50	25A	5 0u	50m	100A	600			SiΔ	C12
11	1N2396	600	1 5	55A	35			150A	1 2	1.5	25		30m	150A	600			SiΔ	A32
12	1N2405	600	1 5	55A	35			150A	1 2	1 5	25		30m	150A	600			SiΔ	C8
13	1N2414	600	1 5	55A	35			150A	1 2	1 5	25		30m	150A	600			SiΔ	C9
14	1N2423	600	1 5	55A	35			150A	1 2	1.5	25		30m	150A	600			SiΔ	F8
15#	BYX45-600R	600	1 5	55A	40	10m	800 Ø	150J	1.45	5.0	25J		100u	125J	600	2.0k		Si	DO1
16▼#	SA2A	600	1 5	60A	100	10m		140J	930m	1 5	25A	10u			600			Si	A268
17	1N1120	600 †	1 5	70C$	15			155A	65 Ø	1 5	150		30mØ	150	600			Si	DO4
18	1N5397	600	1 5	70C	50 §			170C	1 4	1 5	70C		.30m	150	600			Si	DO15
19▼	CTN600	600	1 5	75	50			175A	1 0			10u			600			Si	M594*
20▼	CTP600	600	1 5	75	50			175A	1.0			10u			600			Si	M594a*
21▼	VB600	600	1 5	75	50			175A	1 0			10u			600			Si	M594b*
22#	1WS6	600	1 5	100C	25 §	10m		125J	1 5	5 0	100C		1 5m	125J	600			Si*	A19a
23	60F1	600	1 5	100				175J	1 0	2 4	25C		10m	25C	600			Si	S41a
24	60J1	600	1.5	100A	100			150C	85	1.5	25A	2.5m			600			Si	A52
25	60LA	600	1 5	100	100	4 0m		100A				25n			600			Si	F42
26#	SSiC0840	600	1 6	45A	100	10m		180J	1 0	3 0	20J	1 0u			600			SiΔ	A31v
27	1N1234B	600	1 6	50$	30				1 2	1 0	25	10u	.30m	150	600			Si	S25a
28	S1260	600	1 6	120C	35		15 ØØ	175J	1 0 Ø	1 0	25A		10mØ	100C	600	1 8k		SiΔ	DO13Δ
29	1N1224	600	1 6	135C	20			175J	1 5	2 5	25J	500u	1 5m	150J	600			Si	DO1
30	1N1234	600	1 6	135C	20			175J	1 5	2 5	25J	500u	1.5m	150J	600			Si	S25
31	1N1224B	600 †	1 6	140C	25			175$	1 7	1 2	25	300uØ	10mΔ	25	600			Si	DO1
32	1N1234A	600	1 6	140C	20			175J	1 5	2 5	25J	50u	50m	150J	600			Si	S25
33	1N1544	600	1 6	140C	20			175J	1 5	2.5	25J	50u	50m	150J	600			Si	DO4
34	1N1224A	600	1 6	175J$	20			175J	1 5	2 5	25J	50u	50m	150J	600			Si	DO1
35	MDA922-7†	600 †	1 8	55A	100			175J	1 1	750m	25J	20u			600			SiΔ	M535a
36#	10B6	600	1 8	125B	40	10m		175A	1 1	3.0	25A	50u	50m	150A	600			SiΔ	DO1
37#	SSiC1140	600	1 9	45A	100	10m		180J	1 0	3 0	20J	1 0u			600			SiΔ	A230
38	NS2006	600	2 0		200	8 3m			1 2	2 0		25u			600				
39	1N3613	600 §	2 0	25A	20		4 0	200A	1 0	75	25A	10u	30m	150A	600			Si	A60
40	1N3940	600	2 0	25A	60	1 0m	1 8	175A	1 1	6 0	25A	5 0uΔ	50m	150A	600	1.0k	15uΔ	SiΔ	DO13
41	200R6B	600	2 0	25	60			175	2 0	2 0	25	5 0u	.50m	150	600			Si	
42	AB600	600	2 0	25	15		3 0	100	1 25	1 0	25	5 0u			600			Si	A3g
43	BR76A†	600	2 00	25	25	8 0m		150	1 20	1 0	25	5 0u			660			SiΔ	M534
44#	F62	600	2 0	25A	70	10m	3 0	150A†	1 2	2 0 †	25		20m	125A	600			SiΔ	DO13
45#	F62Z	600	2 0	25A	70	10m	2 3	175A	1.2	2 0 †	25	10u		25A	600	1.0k	2 5u	SiΔ	DO13
46	GR22	600	2 0	25	20			125	1 1	1 0	25	10u	.30m	150	600			Si	A1ry
47	M2G1	600	2 0	25	250			175A	50		150	2 0u	5 0m	150	600			Si	A1ep
48	M2G5	600	2 0	25	250			175A	50		150	10u	5 0m	150	600			Si	A1ep
49	M2G9	600	2 0	25	250			175A	50		150	10u	5 0m	150	600	100	200u	Si	A1ep
50	MB233	600	2 0	25	25	8 3m	2 0	175A	1 0	1 0 Ø	25	25n	5 0u	100	600			Si	A60f
51	SEN2A6†	600	2 0	25	30	8 3m		150A	1 2	1 0		10u	100u	100	200			Si	M79b
52	SEN260	600	2 0	25	150	8 3m		170A	1 2	2 0	50		25u	50	600			SiΔ	DO27
53	SLA27A	600	2 0	25	80	8 3m		150A	95	2 0	25	1.0u	10m	100	600			Si	A69
54	SLA27B	600	2 0	25	80	8 3m		150A	1 0	2 0	25	1 0u	10m	100	600			Si	A69
55	SLA27C	600	2 0	25	80	8 3m		150A	1 0	2 0	25	5 0u	25m	100	600			Si	A69
56	UT267	600	2 0	25A	30	8 3m		175A	1 0	900 Ø	25A	2 0u	75u	100A	600			Si	A60
57	UT2060	600	2 0	25A	60	8 3m		175A	1 0	1 Ø	25A	5 0u	.10m	100A	600			Si	A146m
58#	SR3AM12	600	2 0	40A	150 §	8 3m		150J	1 1	10	25A	100u	1 0m	150J	600			SiΔ	A1fn
59	VS647†	600 †	2.0	40	8 0	8 3m		150	1 2	2 0	25	10	10	150	600	1 1k		SiΔ	M532a
60	VS648†	600 †	2 0	40	8 0	8 3m		150	1 2	2.0	25	10	10	150	600			SiΔ	M532a
61	1N5176	600	2 0	50A	200			175A	1 2 †	2 0	50A		25u	50A	600			Si	DO27
62	20A6	600	2 0	50	50			170A	1 3	2 0	50	10u	25m	50	600			Si	DO27
63	A1423MC1AB1	600	2 0	50A				150A	900m	100m	25A	5 0u	100u	150A	600			Si	M205h
64	B172-60	600	2 0	50	60			150C	2 0	2 0	25	5 0u	50m	100	600			Si	
65	BFW600†	600	2 0	50A	50			100C	1 1	1 0	25A								M40a
66▼	FW600†	600	2 0	50A	50			125A	900m	1 0	25A	5 0u						Si	M40a
67	K8G5	600	2 0	50	60			150C	2 0	2 0	25	5 0u	50m	100	600			Si	
68▼#	MCP6†	600	2 0	50	50			125S				10u	100u	125	600			Si	S349
69	PD60	600	2 0	50A	50			125A	90	1 0	25A	5 0u						Si	M40a*
70	SI6A	600	2 0	50A	80			150C	1 0	3 0	25A	1 0u			600			Si	A1bc
71	BH4R6†	600	2 0	55	45	8 3m		115	1 2 Ø	1.0	85		800uØ	85	420			Si	M151
72	2F6	600	2 0	75C	50			150C	1 3	2 0	25C	2.0u	50u	100C	660			SiΔ	F22
73	HB600	600	2 0	75A	200			175C	1 0	2 0	25A	5 0u			600			Si	A179b
74♦#	SiDA0 5K	600	2 0	85C	40 §	10m		150J	1 4	3 0	25J	2.0u		25J	600	1 1k		Si	A9a
75	FB600†	600	2 0	100	50 §	8 0m		150A	1 0	1 0	25	10u†						SiΔ	M79a
76#	1S1355	600	2.0	124C	40	8 3m		150J	1 2	3 0	25A	10uØ	50mØ	150J	600			SiΔ	S48c
77#	SR2B12	600	2 0	124C	60			150J	1 2 †§	3 0	25C	10u	500u	150J	600				S157a
78	250R6B	600	2 5	25	250			175	2 0	2 5	25	10u	1.0m	150	600			Si	
79	M3G1	600	2 5	25	250			175A	50		150	2 0u	5 0m	150	600			Si	A1ep
80	M3G5	600	2 5	25	250			175A	50		150	10u	5 0m	150	600			Si	A1ep
81	M3G9	600	2.5	25	250			175A	50		150	10u	5.0m	150	600	100	200u	Si	A1ep
82#	SL603F	600	2 5	30A	30	2 0m		150C	1 05	7 5	25A	5.0u	110u	100C	600			SiΔ	DO1
83#	SJ603F	600 †	2 5	100A	30			150A	1 0	75	25A	10u	30m	150A	600			SiΔ	DO3
84#	BYX38/900	600	2 5	125B	38 §	10m		150J	1 7	5 0	25J	10u	20m	125J	600			SiΔ	DO4Ø
85#	BYX38/900R	600	2 5	125B	38 §	10		150J	1 7	5 0	25J	10u	200u	125J	600			SiΔ	DO4
86	1N2530	600	2 5	150C$	50			150C	1 2	4 0	25C	4 0u	50m	150C	600			SiΔ	DO10
87	1N2541	600	2 5	150C$	50			150C	1.0	4 0	25C	1 0u	10m	150C	600			SiΔ	DO10
88	1N2552	600	2 5	150C$	50			150C	1 5	40	25C	10u	1 0m	150	600			SiΔ	DO10
89	BAV207	600	2 5	150C$	50			150C	1 2	2 5	25C	4 0u	50m	150C	600	720		Si	DO4
90	BAV217	600	2 5	150C$	50			150C	1 0	2 5	25C	1 0u	10m	150C	600	720		Si	DO4
91	BAV227	600	2 5	150C$	50			150C	1 5	2 5	25C	10u	1.0m	150C	600	720		Si	DO4
92	BAV307	600	2 5	150C$	50			150C	1 2	2 5	25C	4 0u	50m	150C	600	720		Si	S35
93	BAV317	600	2 5	150C$	50			150C	1 0	2 5	25C	1 0u	10m	150C	600	720		Si	S35
94	BAV327	600	2 5	150C$	50			150C	1 5	2 5	25C	10u	1.0m	150C	600	720		Si	S35
95	BY207	600	2 5	150C$	50			150C	1 2	2 5	25C	4 0u	50m	150C	600			SiΔ	DO4
96	BY217	600	2 5	150C$	50			150C	1 0	2 5	25C	1 0u	10m	150C	600			SiΔ	DO4
97	BY227	600	2 5	150C$	50			150C	1 5	2 5	25C	10u	1 0m	150C	600			SiΔ	DO4
98	BY307	600	2.5	150C$	50			150C	1 2	2 5	25C	4 0u	50m	150C	600			Si	S35
99	BY317	600	2 5	150C$	50			150C	1.0	2 5	25C	1.0u	.10m	150C	600			Si	S35
100	BY327	600	2 5	150C$	50			150C	1 5	2 5	25C	10u	1 0m	150C	600			Si	S35
101	MA60	600	2 5	150B	30			190B	1 0 Δ	2 5	150B	15uΔ						SiΔ	DO4
102	TM61	600	2 7	25C				125C	2 0	2 0	25		.30mØ	100	600			Si	S145
103	NS3006	600	3 0		300	8 3m			1.2	3 0		25u			600				
104	1N2714	600	3 0	25A	15	8 3m		165A	2 6	3.0	25A	200u			600			Si	M126a
105	1N2737	600	3 0	25A	15	8 3m		165A	2 6	3 0	25A	300u			600			Si	M126d
106	1N2762	600	3 0	25A	15	8.3m		165A	2.6	3.0	25A	300u			600			Si	M126d
107	1N3983	600	3 0	25A	30			200A	1.0	90	25A	10u	10m	100A	600			Si	A60
108	3AF6	600	3.0	25A	150			150C	1 2	3.0	25A	300u			200			Si	A222
109	30R6	600	3 0	25	200	8 0m	3 0	25	1 0	3 0	25	10u	50u	100	600			Si	A1rz
110	300R6B	600	3 0	25	250			175	2 0	3.0	25	10u	1 0m	150	600			Si	

SYMBOLS AND CODES EXPLAINED IN INTERPRETER

5. RECTIFIERS

IN ORDER OF (1) PIV, (2) MAX AVG FWD CURRENT (3) TEMPERATURE, and (4) TYPE No.

LINE No.	4 TYPE No.	1 PIV (V)	MAX AVG FWD DC CURRENT 2 Io (A)	3 at TEMP (°C)	MAX RATINGS @ 25°C SURGE CUR. PEAK 1 Cy (A)	PULSE WIDTH (s)	DISS. (W)	MAX. TEMP (°C)	MAXIMUM FORWARD VOLTAGE DROP Vf (V)	at If (A)	at TEMP (°C)	MAX. REVERSE CURRENT Ir @25°C & Vr (A)	Ir at T & Vr (A)	TEMP T (°C)	TEST VOLT Vr (V)	AVALANCHE RATINGS MAX V BKDN. (V)	MIN SLOPE (A/V)	DESCRIPTION MAT.	DWG. No.
1	AC600	600	3.0	25A	50			150C	1 0	3 0	25A	5 0u			600			Si	A1ey
2	BR86A†	600	3 0	25	50	8 0m		150	1.2	1 5	25	5.0u			660			Si△	M534
3▼	HEPR0086-RT	600	3 0	25$	300			175†										Si	M603
4▼	HEPR0096-RT	600	3 0	25$	300			175†										Si	A179
5	M4G1	600	3 0	25	250			175A	.50		150	2.0u	5.0m	150	600			Si	A1ep
6	M4G5	600	3.0	25	250			175A	.50		150	10u	5.0m	150	600			Si	A1ep
7	M4G9	600	3 0	25	250			175A	.50		150	10u	5 0m	150	600	100	200u	Si	A1ep
8	UT3060	600	3 0	25A	80	8 3m		175A	1.0	2 ∅		5.0u	10m	100A	600			Si	A146m
9	3BR6†	600	3.00	30	20	8.0m		125C											M530
10	1N5001	600 †	3 0	40A	300 §			175A	1.0 †	3.0	75A		1.0m	175A	600			Si	M176a
11#	SSiC1240	600	3 0	45A	100	10m		180J	1.0	3 0	20J	1 0u			600			Si△	A231
12	1N1128	600	3 0	50A	25 §			150A	1.1	1.0	25A		30m∅	150A	600			Si△	DO4
13	1N4143	600	3 0	50A	300			175A	1.0	3.0	50A		10m	50A	600			Si	A1en
14#	3JC12	600	3 0	50A	90			150J	1 2	3.0	25A		1.0	150J	600			Si	S193
15	A138-6†	600	3 0	50	50	8.0m		150	1.1	3.0	25	5 0u			660			Si	M79c
16	CH302MA	600	3 0	50A	15			150A	1.2	1.0	25C		3.0m∅	125C	600			Si	S152a
17	CK302MA	600	3.0	50A	15			150A	1.2	1.0	25C		3.0m∅	125C	600			Si	S153
18	CS302MA	600	3 0	50A	15			150A	1 2	1 0	25C		3.0m∅	125C	600			Si	S152
19	HAB060	600	3 0	50	300	8 3m		150A	1 1	3 0	25	5.0u	150u	100	600			Si	A1ez
20	S3A6	600	3.0	50A	300			150C	1.0	3 0	25A	1.0u			600			Si	A1ez
21#	S8-06	600	3.0	50	200	10m		150	1 1	8.0	25	50u			600			Si	S19m
22	S600	600	3 0	50	25		10	175	1.0	1 0	25	5.0u				600		Si	DO4
23	1N5201	600	3 0	55A	300 §	8.3m		175A	1 0	3 0	55A		7.6m△	175A	600			Si	A1rv
24	JAN1N5201	600	3.0	55A	300			175A	1.0	3.0	25	5 0u	12m	100	600			Si	A1et
25	3S6E	600	3 0	55$	250			150A	950m△	3.0	100A	10u	100u	100	600			Si	A1rv
26	SLA5201	600	3 0	55	300			175	1 0	3 0	25	5 0u	.12m	100	600			SL	A31a
27	1N4723	600	3 0	75A	300			175A	1.0	3.0	75		1.0m	175	600			Si	A179a∅
28	HC600	600	3.0	75	300		3 0	175	1.0	1.0	25		1.0m	25	600			Si	A179
29	MR2075	600	3 0	75	300	8 3m		175J	50 ∅	3 0	75	1 0m	3.0m	75	600			Si△	A179a
30	MR2375	600	3 0	75	300	8 3m		175J	1 0	3.0	25	1.0m	3.0m	75	600			Si△	M173
31	S56	600	3 0	80$	20				1 3	5.0	25	100u			600			Si	S48
32	S6BR2	600 %	3.0	95B	53			130B	55 ∅	1 5	25		2.0m	125	600			Si	S81
33	3E6	600	3 0	100	200	8 0m	3.0	175	1.2	3.0	100	10u	100u	50	660			Si△	A1ec
34#	FD63	600	3 0	100C	70	10m		150C	1.4	10	25C		300u	125C	600			Si△	DO13
35	HR600	600	3 0	100	300 §	8 0u		150A	1.0	3.0 †	25	5.0u△	250u	100	600			Si	A1sm
36	1N5406	600	3 0	105C	200 §			170C	1.2	3 0	105C		.50m	150C	600			Si	A3q
37	SEN360	600	3 0	105C	200	8 3m		170A	1 2	3 0	25	5 0u	500u	150	600			Si△	DO27
38#	1S415	600	3 0	125S	33			150S	1.6	10	25S	5 0u	300u	150	600			Si	S61△
39#	1S436	600	3 0	125B				150	1.6		25	5.0u			600			Si△	A89
40	30S6	600	3 0	125	150 §			175J	1.0 †	3.0	25	5.0u	300u	125	600			Si	A1ed
41#	D6003	600	3.0	125C	35			125B	1.5	3 0	25		.30m	125B	600			Si△	S4c
42	S415∅	600	3 0	125A				150A	1.6	10	25A	5 0u	300u	150	600			Si△	S24c∅
43	3F60∅	600	3 0	140B	40	10m		175A	1 0	1 0	25A	50u	500u	150A	600			Si	DO4
44	1N1587	600	3.0	150C				175B	1.5	6.0	25C		50m∅	150	600			Si	DO4
45	3C60	600	3 0	150				190	1.1	6 0	25		500u	150	600			Si	DO4△∅
46	E2K3	600	3 0	150	200			175	1 3	3.0	150	10u	1.0m	150	600			Si	DO4
47#	S6M3	600 %	3.0	150J	180			150J	1 2	3.0			500u		600			Si△	A52d
48	JAN1N2153	600	3.2	25A$	50	8 0m		150S	1.5	6 0	25	50u	.75m	150C	600			Si	S35
49	350R6B	600	3.5	25	250			175	2.0	3.5	25	10u	1.0m	150	600			Si	
50	1N3574	600	3.5	85B$	35			165A	50 ∅	2.5	150A		40m	150A	600			Si	DO4
51	1N2685	600	3 6	25A	15	8 3m		165A	2.6	3 6	25A	300u			600			Si	M126c
52	1N2748	600	3.6	25A	15	8 3m		165A	2 6	3 6	25A	300u			600			Si	M126g
53	400R6B	600	4 0	25	250			175	2.0	4.0	25	10u	1.0m	150	600			Si	
54#	G6004	600	4 0	25A	100	10m	4 5	150A	1.2	4 †	25		3.0m	125C	600			Si△	DO4
55#	P6004	600	4 0	25A	100	10m	4 5	150A	1.2	4 †	25		3.0m	125C	600			Si△	S95a
56#	SJ604F	600 †	4 0	25A	15			200A	1.0	75	25A	10u	1.5m	200A	600			Si△	DO3
57	UT4060	600	4 0	25A	100	8 3m		175A	1.0	3 ∅		5.0u	.10m	100A	600			Si	A146m
58	1N2517	600	4 0	30C	30			165	1.1	1.5	25	2 0u			600			Si△	DO4△
59	1N2523	600	4 0	30C	25			150C				2 0u	.40m	150C	600			Si△	DO4
60#	BYY90	600	4.0	50B	50			150J	1 3	2 0	25J	5.0u			600			Si△	M41a
61	4F6	600	4.0	75	300	8.0m	3 0	175B	1 3	4.0	25	100u	500u	100	660			Si△	F22
62#	SSiC1340	600	4 0	120C	100	10m		150J	1.1	7.0	20J	1 0u			600			Si△	S112b△
63	450R6B	600	4 5	25	250			175	2.0	4.5	25	10u	1 0m	150	600			Si	
64	1N1616	600	5 0					175A	1.5	10	25A							Si	DO4
65	1N2238	600	5 0	25$	20			150	600m	1.5	25		500u	150	600			Si△	DO4
66	1N2238A	600	5 0	25$	100			150	600m	5.0	25		350u	150	600			Si△	DO4
67	1N2239	600	5 0	25$	20			150	600m	1 5	25		500u	150	600			Si△	S35
68	1N2239A	600	5 0	25$	100			150	600m	5.0	25		350u	150	600			Si△	S35
69	500R6B	600	5.0	25	250			175	2 0	5.0	25	10u	1.0m	150	600			Si	
70#	G65HZ	600	5 0	25A	100	10m			1 2	5 0	25A		3 0m	125A	600	1 0k		Si	S19q
71	5BR6†	600	5 00	30	35	8 0m		125C											M530
72▼#	5PM6†	600	5.0	50	125			150J	2.0	5.0			50u	150	600			Si	M585
73	S5A6	600	5 0	50A	300			150C	1.1	5 0	25A	1 0u			600			Si	A1ez
74#	S20-06	600	5 0	50	600	10m		150	1.1	60	25	50u		25	600			Si	S19p
75	60F5	600	5.0	100				175J	1.1	13	25C		10m	25A	600			Si	S41a
76	60LF	600	5 0	100A					1 5	5.0	100A		5.0m	100A	600			Si	F73
77#	SJ603E,K	600 †	5 0	100C	30		3 0	150A	1.0	75	25C	10u	.30m	150C	600			Si△	DO4∅
78	366M	600 †	5 0	145C	100			180J	1.1	5.0	25C		10m	180	600			Si	S27
79	1N1616A	600	5 0	150C	150			190J	1.1	6.0	25		50m	150	600			Si△	DO4△
80	407M	600	5 0	150C	125	8.3m		175J	1 1	5.0	25C		2.0m∅	175J	600			Si	DO4
81	E3K3	600	5 0	150	200			175	1.3	5.0	150	10u	1.0m	150	600			Si	DO4
82	F1K3	600	5 0	150C	200			175J	1.3	30	25C		1.0m	150C	600			Si	DO5
83	MR60#	600	5 0	150B	70			185B	1.0	4.5	150B	20u△						Si△	DO4
84	550R6B	600	5 5	25	250			175	2.0	5.5	25	10u	1.0m	150	600			Si	
85	NS6006	600	6 0		300	8.3m			1 2	6 0		25u			600				
86	6A600	600	6.0	25	300	8 0m		175	1 2	6.0	25	25u						Si	S19f
87	600R6B	600	6.0	25	250			175	2 0	6 0	25	10u	1.0m	150	600			Si	
88	BR96A†	600	6 0	25	150	8 0m		150	1.2	3 0	25	10u			650			Si△	M537
89#	G6006	600	6 0	25A	140	10m	8 0	150A	1.2	6.0 †	25		3 0m	125C	600			Si△	DO4
90#	P6006	600	6.0	25A	140	10m	8 0	150A	1.2	6 †	25		3.0m	125C	600			Si△	S95a
91	SLA600†	600	6 0	25				150A				1.0u	75u	100	600				M545
92#	6JC12	600	6.0	50A	200			150J	1.2	6.0	25A		1.3	150J	600			Si	S19s
93#	46R2	600	6.0	75A	10 §			150C	1 2	6.0	25C		2.5m	150C	600			Si△	DO4∅
94#	46R2S	600	6.0	75A	75 §	10m		150C	1 2	6.0	25C		2 0m	150C	600	700 ∅		Si△	DO4∅
95	VH647†	600 †	6 0	80	25	8 3m		150	1.2	6 0	25	10	10	150A	600	1.1k		Si△	M532a
96	VH648†	600 †	6 0	80	25	8 3m		150	1 2	6.0	25	10	10	150	600			Si△	M532a
97#	6F60	600	6 0	100A	120 §	10m		190J	65	6 0	100B		2.5m	100B	600			Si△	DO4∅
98#	BYX50-600	600	6.0	110B	80 §	10m		150J	1 95	20	25J		1.4m	125J	600			Si	DO4∅
99#	BYX39/600	600	6 0	125B	100	10m		175J	2 0	20	25J		150m	125	600	1.8k		Si	DO4∅
100#	BYX48/600	600	6 0	125B	90 §			175J	1 8 †	15	25J		.20m	125J	400			Si△	DO4∅
101#	S6-603K	600	6.0	125C	130	10m		150J	1.5	32	25A	20u	500u	150C	600			Si△	DO4∅
102#	S6AN6	600 %	6 0	125B	125		6 5	150J	470m∅	6 0 †			2.0m	125B				Si△	DO4∅
103	1N1348	600	6.0	150C	66		9 5	190J	1 2	10	25J		10m	25	600			Si	S26
104	1N1348A	600 †	6 0	150B$	150			200J	.64 ∅	6.0	150B		1 0m∅	150B	600			Si*	DO4
105	1N1348B	600	6.0	150C$	150			190J	1.1	6.0			.02m	25C	600			Si△	DO4△
106	1N2153	600	6.0	150C	150			150	1 2	6 0	25	4 0u	50m	150A	600			Si	DO10
107	1N2153A	600	6 0	150C$	150			150	1 0	10	25	1 0u	.10m	150	600			Si	DO10
108	1N2497	600	6 0	150C				190J	1.1	6.0	25		2.0m∅	150C	600			Si	DO4
109	1N2571	600	6 0	150C$	150			150C	1 5	10	25C	10u	1.0m	150C	600			Si△	DO10
110	BAV407	600	6 0	150C$	150			150C	1 2	6 0	25C	4.0u	.50m	150C	600	720		Si	S35

SYMBOLS AND CODES EXPLAINED IN INTERPRETER

5. RECTIFIERS

IN ORDER OF (1) PIV, (2) MAX AVG FWD CURRENT (3) TEMPERATURE, and (4) TYPE No.

LINE No.	TYPE No.	1 PIV (V)	MAX AVG FWD DC CURRENT 2 Io (A)	3 at TEMP (°C)	MAX RATINGS @ 25°C SURGE CUR. PEAK 1 Cy (A)	PULSE WIDTH (s)	DISS. (W)	MAX. TEMP (°C)	MAXIMUM FORWARD VOLTAGE DROP Vf (V)	at If (A)	at TEMP (°C)	MAX. REVERSE CURRENT Ir @25°C & Vr (A)	Ir at T & Vr (A)	TEMP T (°C)	TEST VOLT Vr (V)	AVALANCHE RATINGS MAX V BKDN. (V)	MIN SLOPE (A/V)	MAT.	DESCRIPTION DWG. No.
1	BAV417	600	6.0	150C$	150			150C	1 0	6.0	25C	1.0u	.10m	150C	600	720		Si	S35
2	BAV427	600	6.0	150C	150			150C	1.5	6.0	25C	10u	1.0m	150C	600	720		Si	S35
3	BAV707	600	6.0	150C$	150			150C	1.2	6.0	25C	4.0u	.50m	150C	600	720		Si	DO4
4	BAV717	600	6.0	150C$	150			150C	1.0	6.0	25C	1.0u	.10m	150C	600	720		Si	DO4
5	BAV727	600	6.0	150C$	150			150C	1.5	6.0	25C	10u	1.0m	150C	600	720		Si	DO4
6	BY407	600	6.0	150C$	150			150C	1.2	6.0	25C	4.0u	.50m	150C	600			Si	S35
7	BY417	600	6.0	150C$	150			150C	1.0	6.0	25C	1.0u	.10m	150C	600			Si	S35
8	BY427	600	6 0	150C$	150			150C	1.5	6.0	25C	10u	1.0m	150C	600			Si	S35
9	BY707	600	6.0	150C$	150			150C	1 2	6 0	25C	4.0u	.50m	150C	600			Si△	DO4
10	BY717	600	6.0	150C$	150			150C	1.0	6.0	25C	1.0u	.10m	150C	600			Si△	DO4
11	BY727	600	6.0	150C$	150			150C	1.5	6.0	25C	10u	1.0m	150C	600			Si△	DO4
12	E4K3	600	6.0	150	200			175	1.3	6.0	150	10u	1.0m	150	600			Si	DO4
13	KR602MA	600	6.0	150S$	75			175S	1.2	6.0	150S		1.0m	150S	600			Si	DO10
14#	SiDO1L	600	7.0	90C	60	10m		140J	1.25	6.0	25	100u		25	400			Si	A31u
15	1N1616R	600	7.0	150B	150			190A	900m	1.0	190J	10u	1.0m	190J	600			Si	DO4
16	1N2700	600	7.2	25A	15	8.3m		165A	2.6	7.2	25A	300u			600			Si	M126j
17	UT5160	600	7.5	100C	150	8 3m		175A	1 0	5 ∅	25	10u	.30m	100	600			Si	S277∅
18	MS60	600	7.5	150B	140			185B	1.0 △	7 5	150B	20u△						Si△	DO4
19#	1S928	600	8.0	40A	430	10m		150J	1.05 △	20	25A		1.3m	150J	600			Si△	S50
20▼#	8PT6$	600	8.0	40A	250	10m		150J	2.0	8.0			8 0m	150	600			Si	M588
21#	S5B60	600	8.0	40A	430	10m		150J	1.05 △	20	25A		1.3m	25A	600			Si△	S50
22#	S8-06F	600	8.0	50	200	10m		150	1.1	8.0	25	50u			600			Si	M389
23	PA60†	600	8.0	55	300	8.3m		150	1.0	2.0	25	10u	100u	100	600			Si	M542
24	E5K3	600	8.0	150	200			175	1.3	8.0	150	10u	1.0m	150	600			Si	DO4
25	UT6160	600	9 0	100C	175	8.3m		175A	1.0	6 ∅	25	10u	.30m	100	600			Si	S277∅
26♦#	SiDA02K	600	9.4	85C	110 §	10m		135J	1 05	3.0	25J	5.0u		25J	600	1 1k		Si	A126b%
27#	SiDO2L	600	9.5	90C	110	10m		140J	1.15	6.0	25J	100u		25J	400			Si	A31u
28	1N2258	600	10	25C$	200			150	.60	10	25		1.0m	150	600			Si△	DO4
29	1N2258A	600	10	25C$	200			150	.60	10	25		.50m	150	600			Si△	DO4
30	1N2259	600	10	25$	200			150	600m	10	25		1.0m	150	600			Si△	S35
31	1N2259A	600	10	25C$	200			150	.60	10	25		.50m	150	600			Si△	S35
32	BR106A†	600	10	25	200	8.0m		150	1.2	5.0	25	10u			650			Si△	M538
33#	G6HZ	600	10	25C	230	10m	18	150C	1.1	10 †	25		3.0m	125C	600	1.0k	25u△	Si△	DO4
34#	G6010	600	10	25A	230	10m	17	150A	1 1	10 †	25		3.0m	125C	600			Si△	DO4
35#	P6HZ	600	10	25C	230	10m	18	125C†	1.1	10 †	25		3.0u	125C	600	1.0k	25u△	Si△	S95a
36#	P6010	600	10	25A	230	10m	17	150A	1.1	10 †	25		3.0m	125C	600			Si△	S95a
37#	SJ604E,K	600 †	10	25C	15		4.3	200C	1.0	75	25C	10u	1.5m	200C	600			Si△	DO4∅
38▼#	10PM6†	600	10	40A	250	10m		150J	2.0	10			8.0m	150	600			Si	M586
39#	0604	600	10	45	300	10m		150J	1.4	30	25	100u			300			Si	S87e
40#	66R2	600	10	75A	115 §	10m		150C	1 1	10	25C		2.0m	150C	600			Si△	DO4∅
41#	66R2S	600	10	75A	115 §	10m		150C	1.1	10	25C		2.0m	150C	600	700 ∅		Si△	DO4∅
42	1N4438†	600 †	10	100	100 §	8.3m	4.0	160A	1.2	10	100		1.0m∅	100	600	900		Si	M249
43#	1S425	600	10	100B	200			175S	1.5	30	25A		50u	100	600			Si	S61△
44	60J2P	600	10	100A	150	4.0m			1.3			2 5m			600			Si	S43
45	S425∅	600	10	100A	200	10m		175A	1.5	30			50u	100	600			Si△	S24c∅
46#	SSiDO440	600	10	110C	125	10m		160J										Si△	S4p△
47#	1S166	600	10	120B	200			175	1.6	50	25J		1.5m	175J	600			Si△	S103
48#	SA6AN12	600	10	120B	210			150J	470m∅	10			2.0m		600			Si△	DO4∅
49#	BYX42/600	600	10	125B	125 §			175J	1.4 †	15	25J		20m	125J	400			Si△	DO4∅
50	BYY71	600	10	125	175			150J											S72c
51	BYY72	600	10	125	175			150J											S72c
52#	D6010	600	10	125B	130			125B	1.5	10	25		30m	125B	600			Si△	S4c
53#	S6AN12	600 %	10	125B	210			150J	500m∅	9.5	25B		2.0m	125B				Si△	DO4∅
54	367M	600 †	10	130C	150			180J	1.2	10	25C		10m	180C	600			Si	S27
55	408M	600	10	145C	175	8 3m		175J	1.2	10	25C		2.0m∅	175J	600			Si	DO4
56	40114	600	10	150C	140 §			175C	60	10	150C	75u△	75m∅	150C	600			Si△	DO4
57	E6K3	600	10	150	200			175	1.3	10	150	10u	1.0m	150	600			Si	DO4
58	F2K3	600	10	150C	200			175J	1 3	30	25C		1.0m	150C	600			Si	DO5
59	TR601	600	10	150$				175S	1 5	25	25		5.0m∅	150C	600			Si	DO5
60#	2WMT6	600	11	100C	220 §	10m		125J	1.5	40	100C		7 0m	125J	600			Si*	DO5
61▼	HEPR0136-RT	600	12	25$	300			190†										Si	DO4
62#	12JC11	600	12	50A	300			150J	1 2	12	25A		2.4	150J	600			Si	S19n
63	SL600	600	12	50A	300			175C	1 4	12	25A		1.0m	150A	600			Si	DO4∅
64#	8AN60	600	12	55A	210	10m		140B	.65 ∅	13	25A		10m	120J	600			Si	S4q∅#
65▼	A129M	600	12	64	150	8 3m		125	1.55	12	64		6.0m	125	600			Si	DO4
66#	SiDO3L	600	12	85C	120	10m		140J	1.55	20	25J	500u		25J	400			Si	M346
67#	12F60	600	12	100A	150 §	10m		190J	65	12	100B		2 5m	100B	600			Si△	DO4∅
68	60J3P	600	12	100A	150	4 0m		100A	1.3			2 5m			600			Si	S23
69#	1S1576	600	12	120C	200			150J	1 2	12	25A		2.4m	150J	600			Si	S19n
70▼#	SR10A12	600	12	120C	200 §	8.3m		150J	1 52	35	25C		3 0m	150J	600			Si△	S19t
71#	SR10D12	600	12	120C	200	8 3m		150	1.3	20			3.0m∅	150J	600			Si	S19c
72#	BYX40-600	600 $	12	125B	200	10m		175	2.5	50	25		300u	125	600	2.0k		Si	DO4∅
73	1N4508	600	12	135C	240		10	175C	1.4	12			2 5m	135C	600	750		Si	DO4
74	1N1206	600 *	12	150C	100		18	190J	1 4	20	25J	10u			600			Si	S27∅
75	1N1206A	600	12	150B$	240			150B	1.3	12			3.0m	150A	600			Si△	DO4△∅
76	JAN1N1206A,RA	600 $	12	150C	240	8.3m		200C	1.35	38	25	50u	1.0m	150	600			Si	DO4∅
77	1N1206B	600	12	150C$	250			150B	1.1	12			1.0m	150A	600			Si△	DO4△
78	1N2582	600	12	150C$	250			150C	1.2	20	25C	8.0u	1.0m	150C	600			Si△	DO10
79	1N2593	600 ∅	12	150C	250			150C	1.0	12		2.0u	.20m	150C	600			Si△	DO10
80	1N2604	600	12	150C$	250			150C	1.5	20	25C	20u	2 0m	150C	600			Si△	DO10
81	BAV507	600	12	150C$	250			150C	1.2	12	25C	8.0u	1.0m	150C	600	720		Si	S35
82	BAV517	600	12	150C$	250			150C	1.0	12	25C	2.0u	.20m	150C	600	720		Si	S35
83	BAV527	600	12	150C$	250			150C	1 5	12	25C	20u	2 0m	150C	600	720		Si	S35
84	BAV807	600	12	150C$	250			150C	1.2	12	25C	8.0u	1.0m	150C	600	720		Si	DO4
85	BAV817	600	12	150C$	250			150C	1.0	12	25C	2 0u	.20m	150C	600	720		Si	DO4
86	BAV827	600	12	150C$	250			150C	1 5	12	25C	20u	2.0m	150C	600	720		Si	DO4
87	BY507	600	12	150C$	250			150C	1.2	12	25C	8.0u	1.0m	150C	600			Si	S35
88	BY517	600	12	150C$	250			150C	1.0	12	25C	2.0u	.20m	150C	600			Si	S35
89	BY527	600	12	150C$	250			150C	1.5	12	25C	20u	2.0m	150C	600			Si	S35
90	BY807	600	12	150C$	250			150C	1 2	12	25C	8.0u	1.0m	150C	600			Si△	DO4
91	BY817	600	12	150C$	250			150C	1.0	12	25C	2.0u	.20m	150C	600			Si△	DO4
92	BY827	600	12	150C$	250			150C	1.5	12	25C	20u	2.0m	150C	600			Si	DO4
93	E7K3	600	12	150	200			175	1 3	12	150	10u	1.0m	150	600			Si	DO4
94	MR1126	600	12	150C	300 §			190J	1.0	12	25C	500u			600			Si△	DO4
95	TR1126	600	12	150C	300 §			190J	1.2	12	25C	50u	40m∅	150C	600			Si	DO4
96	UR123MA	600	12	150S$	240			175S	1.2	12	25		3 0m	150S	600			Si	DO10
97	VTE600	600 †	12 5	100C	250	8 3m	4 0	180J	1 5	25	25C		5.0m	180	600	1.1k		Si△	Z62*
98	VTF600	600 †	12 5	100C	250	8.3m	4.0	180J	1.5	25	25C		5.0m	180	600	1.1k		Si△	Z62*
99	VTG600	600 †	12.5	100C	250	8 3m	4 0	180J	1 5	25	25C		5 0m	180	600	1.1k		Si△	Z62*
100	MT60	600	14	150B	240			185B	1.0 △	14	150B	100u△						Si△	DO4
101▼	HEPR0166-RT	600	15	25$	250			175†										Si	DO5
102▼#	15PT6$	600	15	40A	250	10m		150J	2.0	15			8.0m	150	600			Si	M589
103	SCDA6	600	15	55A	300			150A	1 0	3.0	25A	10u	100u	100A	600			Si	M497
104	SCNA6	600	15	55A	300			150A	1.0	3.0	25A	10u	100u	100A	600			Si	M497
105	SCPA6	600	15	55A	300			150A	1 0	3.0	25A	10u	100u	100A	600			Si	M497
106	15GS6	600	15	75C	150	8 3m		150J	1 5	32	25A	20u	500u	150C	600			Si△	DO4∅
107#	5M60	600	15	79B	300	10m		130A	1 3 †	50	130J		5.0m		600			Si	S193a
108#	RN6015	600	15	100C	350	10m	25	125C	1.2	15 †	25		3.0m	125C	600			Si△	DO5
109#	S6AN15	600	15	120B	220			150J	490m∅	15			3 0m		600			Si△	S324∅
110#	S6BN15	600	15	120B	220			150J	490m∅	15			3.0m		600			Si△	S320∅

SYMBOLS AND CODES EXPLAINED IN INTERPRETER

5. RECTIFIERS

IN ORDER OF (1) PIV, (2) MAX AVG FWD CURRENT (3) TEMPERATURE, and (4) TYPE No.

LINE No.	4 TYPE No	1 PIV (V)	MAX AVG FWD DC CURRENT 2 Io (A)	3 at TEMP (°C)	MAX RATINGS @ 25°C SURGE CUR. PEAK 1 Cy (A)	PULSE WIDTH (s)	DISS. (W)	MAX. TEMP (°C)	MAXIMUM FORWARD VOLTAGE DROP Vf (V)	at If (A)	at TEMP (°C)	MAX. REVERSE CURRENT Ir @25°C & Vr (A)	Ir at T & Vr (A)	TEMP T (°C)	TEST VOLT Vr (V)	AVALANCHE RATINGS MAX V BKDN. (V)	MIN SLOPE (A/V)	DESCRIPTION MAT.	DWG No.
1	368M	600	15	125C	240	8.3m		180J	1 3	15	25C		2.0m☑	130C	600			Si	DO4
2	409M	600	15	125C	250	8.3m		175J	1 3	15	25C		2 0m☑	175J	600			Si	DO4
3	1N3214	600	15	150C	350			175A	1 5	40	75	1.0u	10m	150	420			Si	S4h
4	F3K3	600	15	150C	200			175J	1.3	30	25C		1.0m	150C	600			Si	DO5
5	VS600	600	15	150C$	250			175A	1.5	15	25A	1 0u			600			Si	S21b
6#	16F60	600	16	100B	350	10m	17	190	55	16	100		1.5m	175	600			Si	DO4
7	1N3622	600	16	155B$	300			175B					1 0m	175B	600			Si△	DO4
8#	SK603K	600	17 5	85C	230	10m		150J	1 4	50	25A	20u	500u	150C	600			Si△	DO4☑
9	S5978H,9H	600	18					150C	1.2										A1ss#
10#	S6BR8	600 %	18	120B	188		18	140B	60 ∅	18	25		10m	125	600			Si	S122b
11	40214	600	18	150C	250 §			175A	650m∅	18	150C	100u	1.7m∅	150C	600			Si△	DO5☑
12	V600	600	18	150C	300			175A	1.2	25	25A		4.0m	150A	600				DO21☑
13	2060	600	19	25A	200		4 0 ∅	150A	600m∅	19	25A		10m∅	150C		900		Si△	DO4△
14	1N2277	600	20	25$	400			150	600m	20	25		1 0m	150	600			Si△	DO4
15#	26R2	600	20	25A	250 §	10m	25	150J	.50	20	25J		1.5m	150J	600			Si	DO5☑
16#	26R2S	600	20	25A	250 §	10m	25	150C	.50	20	25C		1.5m	150C	600	700 ∅		Si	DO5☑
17#	1S933	600	20	40A	1.1k	10m		150J	1 05 △	40	25A		3.3m	150J	600			Si△	S51
18▼#	20PM6†	600	20	40A	250	10m		150J	2.0	20			8.0m	150	600			Si	M587
19#	S8B60	600	20	40A	100	10m		150J	1 05 △	40	25A		3 3m	25A	600			Si△	S51
20#	S20-06F	600	20	50	600	10m		150	1.1	60	25	10u		25	600			Si	S19p
21#	21PT60	600 *	20	100B	360 §	8 3m		170J	1 2 †	20	25		1 6m	140B	600			Si	M471
22#	BYX13/600	600	20	100C	600	10m	35	150J	2 0	100	25C		2.0m	125C	300			Si	S72c☑
23	A40M	600	20	110B	300			175B	1 2	20	25J	1.0m			600			Si	S88
24	A41M	600	20	110C	300			175J	1 2	20	25J	1 0m			600			Si	S88
25	A44M	600	20	110C	300			175J	1.2	20	25J	1.0m	4 0m∅	150J	600			Si	M76☑
26#	1S176	600	20	120B	400			175	1.6	100	25J		5 0m	175J	600			Si△	S102
27#	S6AN20	600	20	120B	250			150J	480m∅	20			3.0m		600			Si△	S324☑
28#	S6BN20	600	20	120B	250			150J	480m∅	20			3.0m		600			Si△	S320☑
29#	BYX25/600	600	20	125B	360	10m		175J	1.8	50	25		1.0m	125J	600	1.0k		Si	Z19☑
30	1N1198A	600	20	150C	350			175C	.60	20	25		1 5m	150C	600			Si△	DO5
31	417M	600	20	150C	350	8 3m		175J	1.05	20	25C		2.0m☑	150C	600			Si	DO5
32	F4K3	600	20	150C	600			175J	1.3	50	25C		2.0m	150C	600			Si	DO5
33	TM69	600	21	75C				190S	1 2	12	25		2.0m☑	150	600			Si	S145
34#	3WM6	600	21	100C	220 §	10m		125J	1.4	60	100C		14m	125J	600			Si*	S8
35	MR756	600 †	22	60	400			175J	900m	6 0	25A	250u	1.0	150J	600			Si△	A264
36	1N3966	600	22	120C$	200		4.0 ∅	150A	.60 ∅	26	25A		1.0m∅	150C	600	900		Si△	DO4△#
37#	25B60T†	600	25		700	20m		150A				15m			600				M563
38#	25JC12	600	25	50A	600			150J	1.2	25	25A		6.0	150J	600			Si	S19n
39	PB60†	600	25	55	300	8 3m		150	1.0	3.0	25	10u	100u	100	600			Si	M542
40	PBU60†	600	25	55	300	8.3m		150	1.0	3 0	25	10u	100u	100	600			Si	M542a
41▼	S25A60	600	25	55	300	8.3		150	1.0	3 0	25	10u	100u	100	50			Si	M542
42▼	A139M	600	25	75	400	8.3m		125	1.85	25	75		6.0m	125	600			Si	DO5
43	25P60	600	25	100C	300			175J	7.0 ∅	25 †	25C		7.0m☑	150C	600			Si△	M38ab☑
44	25PW60	600	25	100C	300			175J	.70 ∅	25 †	25C		4.0m☑	150C	600			Si△	DO21☑
45	VT600†	600 †	25	100	250	8.3m		180	1.5	25	25		5.0	180	600	1.1k		Si△	M560
46	VTA600	600 †	25	100C	250	8 3m	4.0	180J	1.5	25	25C		5.0m	180	600	1 1k		Si△	Z62*
47	VTB600	600 †	25	100C	250	8.3m	4.0	180J	1.5	25	25C		5.0m	180	600	1.1k		Si△	Z62*
48	VTC600	600 †	25	100C	250	8.3m	4 0	180J	1.5	25	25C		5.0m	180	600	1.1k		Si△	Z62*
49	VTD600	600 †	25	100C	250	8 3m	4 0	180J	1.5	25	25C		5.0m	180	600	1 1k		Si△	Z62*
50#	1S1842	600	25	110C	300			150J	1.2	25	25A		6 0	150J	600			Si	S19n
51#	SSiE1340	600	25	135C	350	10m		150J	1.1	45	25J	20u			600			Si△	S290△
52#	SSiE1440	600	25	135C	350	10m		150J	1 1	45	25J	20u			600			Si△	S290△
53	25F60	600	25	140				190J	1.0	25	25C		20m	25	600			Si	M56△☑
54	1N1198	600 *	25	145C	125		30	190J	1.4	30	25J	10u			600			Si	S29
55	1N2160	600 ∅	25	145B	400			200J	60 ∅	25	145B		2.0m∅	145B	600			Si*	DO5☑
56	418M	600	25	145C	400	8 3m		175J	1.1	25	25C		2.0m☑	145C	600			Si	DO5
57	F5K3	600	25	150C	600			175J	1.3	90	25C		2.0m	150C	600			Si	DO5
58#	SSiE1140	600	25	150C	350	10m		150J	1.0	40	25J	20u			600			Si△	M324a
59#	SSiE1240	600	25	150C	350	10m		150J	1 0	40	25J	20u			600			Si△	M324a
60	PBT60$	600	27.5	55	300	8.3m		150	1 0	3.0	25	10u	100u	100	600			Si	M543
61	1N1438	600	30	25B	160	1	38	175A	1 2	60	25		5.0m	150B	600				S143
62	3160	600	30	25A	200		4.0 ∅	150A	.60 ∅	34	25A		1 0m∅	150C	600	900		Si△	DO5△#
63▼#	30PT6$	600	30	40A	250	10m		150J	2.0	30			8.0m	150	600			Si	M590
64	PBC60	600	30	55C	300			150C	1 0	3.0	25C	10u	100u	100C	600			Si	M447☑
65	1N3665	600 †	30	100C	400 §			175C	.70 ∅	25	25		2 0m☑	150	600			Si	DO21
66	PZ140F	600 †	30	100C	400			175C	.70 ∅	2.0	25C		2.0m☑	150C	600	950		Si	DO21☑
67#	3C6	600	30	110C	500	10m		150J	1.5	30	40A		3.0m	25	600			Si*	S181
68#	S6AN31	600	30	120B	347			150J	600m∅	30			4.0m		600			Si△	S325☑
69#	S6BN31	600	30	120B	347			150J	600m∅	30			4.0m		600			Si△	S321☑
70	G3K3	600	30	150C	1.5k			175J	1 3	200	25C		5.0m	150C	600			Si	DO8
71#	15AN60	600	34	20A	500	10m		140B	700m∅	25	25A		20m	120J	600			Si	S241a☑#
72	1N2285	600	35	25$	400			150	600m	35	25		5.0m	150	600			Si△	DO5
73▼	HEPR0257-RT	600	35	25$	400			190†										Si	DO5
74#	R6HZ	600	35	50C	250	10m	35	175C†	1.5	20 †	25		3 0m	150C	600	1.0k	40u△	Si△	DO5
75#	DA777	600	35	80B	300	10m	46	125	1.3	100	25	15u	.50m	125	400			Si△	S143a
76#	DB777	600	35	80B	300	10m	46	125	1.3	100	25	15u	.50m	125	400			Si△	S143a
77	371M	600 †	35	100C	500	8 3m		160J	1 2	35	25C		20m	160J	600			Si	DO5
78#	R63HZ	600	35	100C	500	10m		150C	1 5	110	25C		5.0m	150C	600			Si△	DO5
79#	SR30B12	600	35	100C	600	8.3m		150	1 3	50			10m∅	150J	600			Si	S19d
80	1N4527	600	35	115C	500		20	175C	1.4	35			3.5m	115C	600	750		Si	DO5
81	1N1190	600	35	140C	500	8.3		140C	1.7	35	140C							Si	S29a
82	35F60	600	35	140	900			190J	1 1	50	25		20m	25	50			Si	M56△☑
83#	36R2	600	35	140C	500 §	10m		200J	1 3	35	25C		10m	150C	600			Si△	DO5☑
84#	36R2S	600	35	140C	500 §	10m		200J	1.3	35	25C		10m	150C	600	700 ∅		Si△	DO5☑
85	127350F	600	35	150	500	8.3m		200J	1 3	35	25C		3.0m☑	150C	600			Si	DO31
86#	SUT601K	600	36	85C	600	10m		150J	1.6	90	25A	200u	3.0m	150C	600			Si△	DO5☑
87	TR602	600	37	65C				175S	1.5	50	25C		5.0m☑	150C	600			Si	DO5
88#	40B60T†	600	40		1 1k	20m						15u			600				M563
89#	BYX52-900	600	40	25C	650			175J	1 8	150	25J		1.6m	125J	600			Si	DO5☑
90#	1S938	600	40	40A	2.7k	10m		150J	1 05	100	25A		6.6m	150J	600			Si△	#
91	S12C60	600	40	40A	2 7k	10m		150J	1.05	100	25		6.7m	25A	600			Si△	#
92#	K6040	600	40	90C	800	10m	44	125C	1 2	40 †	25		4.0m	125C	600			Si△	S245
93#	6WM6	600	40	100C	650 §	10m		125J	1.4	110	100C		14m	125J	600			Si*	S8
94#	10M60	600	40	104B	800	10m		130A	1 2 †	120	130J		10m		600			Si	S4s
95▼#	4C6	600	40	110C	700	10m		150S	1.5	40	40A	3.0m	12m	150	600			Si*	S181
96	419M	600	40	120C	500	8.3m		175J	1.2	40	25C		2.0m☑	120C	600			Si	DO5
97#	S6AN40	600	40	120B	485			150J	500m∅	40			4.0m		600			Si△	S325☑
98#	S6BN40	600	40	120B	485			150J	500m∅	40			4.0m		600			Si△	S321☑
99	40HF60	600 †	40	140C	500 §	8 3m		180J	1 3	40 †	140C		7.0m☑	140C	600			Si△	S21e☑
100	1N1190A	600	40	150C	800		68	200C	65	40	150C	15u∅	1 8m☑	150	600			Si△	DO5
101#	BYY77	600	40	150J	800			100B	1 0 ∅	40	25		1.4m	125B	600			Si△	S72j
102#	BYY78	600	40	150J	800			100B	1 0 ∅	40	25		1.4m	125B	600			Si△	S72k
103	G4K3	600	40	150C	1.5k			175J	1.3	200	25C		5 0m	150C	600			Si	DO8
104	127351F	600	44	150	700	8.3m		200J	1.3	44	25C		3 0m☑	150C	600			Si	DO21
105#	25AN60	600	45	20A	700	10m		140B	700m∅	40	25A		20m	120J	600			Si	S241a☑#
106	1N2455	600	45	60C	300			175B	1.1	20	25		5.0m∅	150B	600			Si△	DO5
107#	BYX56-600	600	47	115B	800	10m		175J	1.8	150	25J		1.6m	125J	600	2.0k		Si	DO5☑
108	SLEA6†	600	50		150	16m			1.0	3 0	25	5.0u	100u	100	600			Si	M546
109#	SL603A,K	600 †	50	100C	150		10	150C	1 2	10	25C	50u	1.5m	150C	600			Si△	DO4☑
110	1N3970	600	50	120C$	600		7 0 ∅	150A	.60 ∅	60	25A		2.0m∅	150C	600	900		Si△	DO5△#

SYMBOLS AND CODES EXPLAINED IN INTERPRETER

5. RECTIFIERS

IN ORDER OF (1) PIV, (2) MAX AVG FWD CURRENT (3) TEMPERATURE, and (4) TYPE No.

LINE No.	4 TYPE No.	1 PIV (V)	MAX AVG FWD DC CURRENT 2 Io (A)	3 at TEMP (°C)	MAX RATINGS @ 25°C SURGE CUR. PEAK 1 Cy (A)	PULSE WIDTH (s)	DISS. (W)	MAX. TEMP (°C)	MAXIMUM FORWARD VOLTAGE DROP Vf (V)	at If (A)	at TEMP (°C)	MAX. REVERSE CURRENT Ir @25°C & Vr (A)	Ir at T & Vr (A)	TEMP T (°C)	TEST VOLT Vr (V)	AVALANCHE RATINGS MAX V BKDN. (V)	MIN SLOPE (A/V)	MAT.	DESCRIPTION DWG. No.
1	50C60	600	50	140	400	1	55	190J	1 1	50	25		20m	150	50			Si	DO5△☑
2	1N1687	600	50	150C	700	8.3m		165C	1.2	1 1	150C		25m	150C	600			Si	S8q
3	1164F	600	50	150	1.0k	8 3m		200J	1.2	40	25C		2.5m☑	175J	600	950		Si	DO5
4	MR1209	600	50	150C	800	8.3m		190J	.40 Ø	50	150C		10m	150C	600			Si	M226☑
5#	S500-6	600	55	50	3.7k	20m		120	1.2	500	50	1.0m			600			Si	M189
6#	S6AN55	600	55	125B	935			150J	500mØ	55			6.0m		600			Si△	☑
7#	S6BN55	600	55	125B	935			150J	500mØ	55			6.0m		600			Si△	S322☑
8#	S6GN55	600	55	125B	935			150J	500mØ	55			6.0m		600			Si△	S322☑
9	1N2467	600	60	60C	450			175B	1.1	30	25		5.0mØ	150B	600			Si△	DO5
10#	SB601K	600	60	85C	700	10m		150J	1.7	210	25A	200u	3.0m	150C	600			Si△	S168a☑
11#	SBT601K	600	60	85C	700	10m		150J	1.7	210	25A	200u	3.0m	150C	600			Si△	S168a☑
12	1N2138	600	60	100C	700 §			175C	1.4	60	115C		30m△	175C	480			Si	DO5
13	1N2138A	600	60	100C	900 §			200C	1.3	60	140C		30m△	200C	480			Si	DO5
14#	K66HZ	600	60	110C	1.2k	10m	70	150C	1.2	60 †	25		5.0m	125C	600	1.0k	50u△	Si△	S245
15#	KS6060	600	60	110C	1.5k	10m	67	150C	1.2	60 †	25		5.0m	125C	600			Si△	S245
16#	25G60	600	60	112B	850 §	10m	60	190B	.55 Ø	25	25A							Si*	DO5☑
17#	20M60	600	60	126B	1.0k	10m		175A	1.5 †	180	175J		10m		600			Si	S4t
18	H5K3	600	60	150C	3 0k			175J	1.3	300	25C		10m	150C	600			Si	DO9
19	TR603	600	65	75C				175C	1.5	100	25C		5.0m☑	150C	600			Si	DO5
20#	45AR60	600	70	25A	1.1k	10m		140B	.70 Ø	90	25A		25m	120J	600			Si	S8j#
21	1N4138	600	70	100C	750 §			175C	1.6	70	100C		24m	175C	600			Si	DO5
22#	SR70C12	600	70	119C	1 5k§	8 3m		150J	1.6	220	25C		30m	150J	600			Si△	S333
23#	S6AN71	600	70	120B	1.2k			150J	470mØ	70			6.0m		600			Si△	☑
24#	S6BN71	600	70	120B	1.2k			150J	470mØ	70			6.0m		600			Si△	S323☑
25#	S6GN71	600	70	120B	1 2k			150J	470mØ	70			6.0m		600			Si△	S322☑
26	70H60	600	70	125C	1 2k§	8 3m		200J	1.3	70 †	125C		10m☑	125C	600			Si*	DO5☑
27	70H60A	600 †	70	125C	1 2k§	8.3m		200J	1.3	70	125C		10m☑	125C	600			Si△	DO5☑
28	1N1403	600 †	70	150C	1 2k			190J	1.25	70	150C		30m	150C	600			Si	S14b
29	CH109F2	600	70	150C	1.5k	8 3m		200C	1.3 △	150	150C		15mØ	150C	600			Si*	S53△
30	J4K3	600	70	150C	4 0k			175J	1 2	300	25C		10m	150C	600			Si	DO9
31	J5K3	600	70	150C	4.0k			175J	1.2	300	25C		10m	150C	50			Si	DO9
32	60JH3	600	72		150	4 0m		100A	1.2									Si	S11f☑
33#	10WM6	600	75	100C	1.0k§	10m		125J	1.5	200	100C		20m	125J	600			Si*	M43a
34	75E60	600	75	150C	850	4 0m		190J	1.0	90	25C		40m	25C	600			Si	S83a△☑
35	75F60	600	75	150C	850	4 0m		190J	1.0	90	25C		40m	25C	600			Si	M56a△☑
36#	1S943	600	80	40A	5 4k	10m		150J	1 05	200	25A		13m	150J	600			Si△	M26#
37#	S16B60	600	80	40A	5 4k	10m		120J	1.05 △	200	25A		13m	25A	600			Si△	M26#
38#	8C6	600 †	80	100J	1.2k		100	150J	1.3	80	100C		5 0mØ	25J	600			Si*	S110a
39	ST660	600	100	25A	1.6k			190J	1.2	100	25A		5.0m	25	600			Si	Z29
40#	70BN60	600	100	40A	1 8k	10m		140B	.70 Ø	130	25A		30m	120J	600			Si	S8k☑#
41	1N2435	600	100	75C	950			175B	1 1	50	25		10mØ	150B	600			Si△	DO8
42#	10C6☑	600 †	100	100J	1 5k		120	150J	1 2	100	100C		5 0mØ	25J	600			Si*	S110a
43#	1S436R	600	100	105B	1.6k			175J	1.6	500	25J		13m	175J	600			Si△	S12f
44	1N3293	600	100	130C	1.6k	8 3m		200C	1.5	100	130C		17m	130B	600			Si	DO8
45	1N3293A	600	100	130C	2.3k			200C	1 25	100	130C		17m	130C	600			Si	DO8
46	1N3293R	600	100	130B	1 6k			200A	900m	100	200J		17	200J	600			Si	DO8
47	A70M	600	100	130B	1.6k	8 3m		200J	600mØ	100	130B		6.5m	130B	600			Si	DO8
48	A71M	600	100	130B	1 6k	8.3m		200J	600mØ	100	130B		6 5m	130B	600			Si	DO8
49	MR1219SB	600	100	135C	2 0k§	8.3m	160	190J	400mØ	80 †	150C		15m	150C	600			Si△	S199
50	MR1219SL	600	100	135C	2.0k§	8 3m	160	190J	400mØ	80 †	150C		15m	150C	600			Si△	S87a
51	MR1819SB	600	100	135C	2.0k§	8.3m	160	190J	400mØ	80 †	150C		15m	150C	600			Si△	S199m
52	MR1819SL	600	100	135C	2 0k§	8.3m	160	190J	400mØ	80 †	150C		15m	150C	600			Si△	S87f
53	100E60	600	100	150C	2 0k	4.0m		190J	1 0	140	25C		40m	25C	600			Si	S83△☑
54	100F60	600	100	150C	2 0k	4.0m		190J	1 0	140	25C		40m	25C	600			Si	M56a△☑
55	150L60A	600 †	100	150C	3 0k§	8 3m		200J	1 2	150 †	150C		12m☑	150C	600			Si*	DO30☑
56#	AS6☑	600	100	150	4 0k	20m		150										Si	
57	1N3974	600	104	120C$	1 5k		12 Ø	50A	.60 Ø	120	25A		5.0mØ	150C	600	900		Si△	DO8△#
58#	S200-06F	600	110	50	4 0k	10m		150	1 3	600	25	20m			600			Si	M189a
59#	S12P600E	600	110	75C	2 0k	10m		175J	1.35	300	25A	1.0m	15m	175C	600			Si△	F56m
60#	S10N600E3	600	125	100C			160	150	.97	125	100C	6.0m	20m	100C	600			Si	F56m
61#	S10N600E4	600	125	100C			160	150	1.03	125	100C	6.0m	20m	100C	600			Si	F56m
62#	S10N600E5	600	125	100C			160	150	1.08	125	100C	6.0m	20m	100C	600			Si	F56m
63	10912F	600	125	150	1 7k	8.3m		200J	1.3	125	25C		5.0m☑	150C	600			Si	DO8
64#	125BN60	600	130	20A	3 0k	10m		140B	700mØ	180	25A		40m	120J	600			Si	S120a☑#
65#	BYX32/600	600 †	130	135C	1 6k			190J	1.7	500	190J		17m	175J	600			Si△	S203b☑
66	1N2445	600	150	75C	1.2k			175B	1.1	70	25		10m	150B	600			Si△	DO8
67#	S11P600E	600	150	75C	2 2k	10m		175J	1 35	300	25A	1.0m	15m	175C	600			Si△	F56m
68#	SD603K	600	150	75C	2 2k	10m		175J	1.35	300	25A	1.0m	15m	175C	600			Si△	☑
69♦#	15C6	600	150	90C	2.0k	10m		150S	1 5	150	40A	6.0m	30m	150	600			Si	S12j
70	1N3090	600	150	100C	3.0k§			200C	1.2	150	150C		17m	150C	600			Si	DO30
71♦#	BYX23/600	600	150	100A	1 6k§	10m	30	190J	1 6	500	25J		24m	175J	600			Si△	S128
72	1N4592	600	150	110	3 0k			200A	1.4	150	110		20m	200	600			Si	DO8☑
73#	S6PN125	600 %	150	110B	3 3k			150J	1 1	150			30m		600			Si*	S319☑
74#	S6BR125	600 %	150	115B	3 3k			150J	1.1	150			40m		600			Si*	F19
75#	S6KN125	600 †	150	115B	3.3k			170J	1 1	150			30m		600			Si*	F80☑
76#	45M60	600	150	116B	3 0k	10m		175A	1 5 †	500	175J		20m		600			Si	S8m
77#	SU601A,K	600 †	150	120C	600		30	150C	1.2	30	25C	200u	2.0m	150C	600			Si△	S168a☑
78#	BYX14/600	600	150	125C	3 0k	10m	240	190J	1.8	750	25		15m	175C	300			Si	M294☑
79#	S6LN125	600 %	150	125B	3 3k			150J	1 1	150			30m		600			Si*	M521☑
80	150K60A	600 †	150	150C	3.0k§	8.3m		200J	1 2	150 †	150C		12m☑	150C	600			Si*	DO8☑
81	ST760	600	160	25A	3 0k			190J	1 2	160	25A		40m	25	600			Si	Z28
82	ST1060	600	160	25	3.0k			190J	1.2	160	25		40m	25	600			Si	Z27
83	DRS166	600	160	115C	2 5k	8 3m	170	175J	1 45	160 †	115C	5.0m	12m	115C	600			Si△	S210a☑
84	S5160	600	160	120C	2 2k		3 Ø☑	175J	.60 Ø	160	25A		10mØ	150C	600	900		Si△	DO9△
85	1N3269	600 †	160	125C	2 0k			190J	1 25	160	125C		12m	125C	600			Si	DO9☑
86	160E60	600	160	150C	5 0k	4 0m		190J	1.0	160	25C		40m	25C	600			Si	S83△☑
87	160F60	600	160	150C	5 0k	4 0m		190J	1.0	160	25C		40m	25C	600			Si	M56a△☑
88	175E60	600	175	150C	5 0k	4 0m		190J	1.0	175	25C		40m	25C	600			Si	S83△☑
89	175F60	600	175	150C	5 0k	4.0m		190J	1.0	175	25C		40m	25C	600			Si	M56a△☑
90#	200BN60	600	180	20A	7 5k	10m		140B	700mØ	240	25A		40m	120J	600			Si	S120a☑#
91#	S13N600E	600	190	75C	2.5k	10m		175J	1.35	300	25A	1.0m	15m	175C	600			Si△	F56m
92	SCDAS6	600	200	55A	900			150A				50u	500u	100A	600			Si	M495
93	SCNAS6	600	200	55A	900			150A				50u	500u	100A	600			Si	M495
94	SCPAS6	600	200	55A	900			150A				50u	500u	100A	600			Si	M495
95#	S20P600JA	600	200	100C	4 0k	10m		175J	1 25	600	25A		30m	175C	600			Si△	
96	DRS206	600	200	110C	3 5k	8 3m	220	175J	1.40	200 †	110C	5.0m	12m	110C	600			Si△	S210a☑
97	S6BN200	600 %	200	120B	4 0k		250	150B	600mØ	190	25B		40m	125C	600			Si	F19a
98	411M	600	200	130	3 0k	8 3m		200J	1.5	125	130C		8.0m☑	130C	600			Si	DO8
99	MR1229FB	600	200	135C	3 6k	8 3m		190J	.40 Ø	160	150		20m	150C	600			Si△	M227
100	MR1229FL	600	200	135C	3 6k	8 3m		190J	.40 Ø	160	150		20m	150C	600			Si△	M228
101	MR1229SB	600	200	135C	3 6k	8 3m		190J	40 Ø	160	150		20m	150C	600			Si△	S199a
102	MR1229SL	600	200	135C	3 6k	8.3m		190J	.40 Ø	160	150		20m	150C	600			Si△	S87b
103#	20C6△	600	220	100C$	3.3k	10m		150	1.2	220	25		5.0m	25	600			Si	S184
104	410M	600	220	110C	3 0k	8 3m		190J	1 3	150	110C		10m☑	110	600			Si	DO8
105#	SR200P12	600	240	75C	5 0k§	8 3m		150J	1.73	750	25C		30m	150J	600			Si△	S298☑
106♥#	1S2346	600	240	92C	5 0k§	8 3m		150J	1 2	400	25C		30m	150J	600			Si△	M568
107	1N3170	600 *	240	120C	3 0k			190J	1 25	240	25C		16m	125C	600			Si	S14f2
108	240E60	600	240	150C	7 5k	4 0m		190J	1 0	240	25C		50m	25C	600			Si	S83△☑
109	240F60	600	240	150C	7 5k	4 0m		190J	1 0	240	25C		50m	25C	600			Si	M56a△☑
110#	BYX27/600	600	250		4 0k	10m	80k	190J	1 8	1.2k	190J		42m	175J	600	1.0k		Si	M105

SYMBOLS AND CODES EXPLAINED IN INTERPRETER

5. RECTIFIERS

IN ORDER OF (1) PIV, (2) MAX AVG FWD CURRENT (3) TEMPERATURE, and (4) TYPE No.

LINE No.	TYPE No. [4]	PIV [1] (V)	MAX AVG FWD DC CURRENT Io [2] (A)	at TEMP [3] (°C)	MAX RATINGS @ 25°C SURGE CUR. PEAK 1 Cy (A)	PULSE WIDTH (s)	DISS. (W)	MAX. TEMP (°C)	MAXIMUM FORWARD VOLTAGE DROP Vf (V)	at If (A)	at TEMP (°C)	MAX. REVERSE CURRENT Ir @25°C & Vr (A)	Ir at T & Vr (A)	TEMP T (°C)	TEST VOLT Vr (V)	AVALANCHE RATINGS MAX V BKDN. (V)	MIN SLOPE (A/V)	MAT.	DESCRIPTION DWG. No.
1	ST860	600	250	25A	5 0k			190J	1.2	250	25		50m	25	600			Si	Z27
2	ST960	600	250	25A	5.0k			190J	1.2	250	25		50m	25	600			Si	Z28
3	A96M	600	250	70C	3 3k	8 3m		125J	1.25	250	25		12m	70C	600			Si	S120b
4	A97M	600	250	70C	3.3k	8.3m		125J	1.25	250	25J		12m	70C	600			Si	S120b
5♦#	25C6	600	250	90C	4.0k	10m		150S	1.5	250	90C	8.0m	45m	150	400			Si	S184
6	1N2064	600	250	100C	4 5k§			200C	1 3 †	250	135C		17m	135	480			Si	D09
7	CH119F	600 †	250	100C	4.0k			200S	1.3	250	25C		7.0m	100C	600			Si	D08⊠
8#	1S736R	600	250	105B	4.5k			175J	1.45	1.0k	25J		50m	175J	600			Si△	S12e
9#	70M60	600	250	107B	4 0k	10m		175A	1.5 †	800	175J		20m		600			Si	S8n
10	DRS246	600	250	110C	4.5k	8.3m	280	175J	1.40	250 †	110C	5.0m	12m	110C	600			Si△	S210a⊠
11	1N3978	600	250	120C$	4.0k		25 ∅	150A	.60 ∅	250	25A		10m∅	150C	600	900		Si	D09△#
12#	BYX33/600	600	250	120A	4 0k	10m		190J	1.8	1.2k	190J		42m	175J	600			Si△	M294⊠
13	1N3740	600	250	130C	4 5k	8 3m		200C	1.1 △	250	130C		12m	130B	600			Si	D09⊠
14	A90M	600	250	130B	4 5k	8.3m		200J	400m∅	250	130B		12m	130B	600			Si	D09
15	A91M	600	250	130B	4.5k	8 3m		200J	400m∅	250	130B		12m	130B	600			Si	D09
16	70S60	600	250	135C	4.5k§	8 3m		200J	1 25	250 †	135C		25m⊠	135C	600			Si*	S8b2⊠
17	70T60	600	250	135C	4 5k§	8.3m		200J	1.25	250 †	135C		25m⊠	135C	600			Si*	S8b1⊠
18#	S21N600H	600	270	75C	3.4k	10m		175J	1.45	600	25A	30m	80m	175C	600			Si△	M199
19	1N4052	600	275	120C	5.0k			190J	1.35	275	120C		15m	120C	600			Si	D09⊠
20	CS131F	600 †	275	120C	4.0k			200	1 3	275	25C		13m⊠	130C	600			Si	D09
21	275E60	600	275	150C	7.5k	4.0m		190J	1.0	275	25C		50m	25C	600			Si	S83△⊠
22	275F60	600	275	150C	7.5k	4.0m		190J	1.0	275	25C		50m	25C	600			Si	M56a△⊠
23#	S6EN270	600 %	290	125B	1.5k	20m		160B†	.975	340			50m	125B	600			Si*	M307
24#	S6FN270	600 %	290	125B	1 5k	20m		160B†	.975	340			50m	125B	600			Si*	M357c
25#	S6GN270	600 %	290	125B	1.5k	20m		160B†	.975	340			50m	125B	600			Si*	M357a
26♦#	S6HN270	600 %	290	125B	7 2k	10m		160B†	975m	340			50m	125B	600			Si*	M366a
27#	40C6	600	300	100C	5.0k	10m		150J		400			10m	25J				Si*	M366
28#	S6EN301	600	300	100B	5.1k	10m	410	100B	650m∅	300	100B		35m	100B	600			Si	M307
29#	S6FN301	600	300	100B	5.1k	10m	410	100B	650m∅	300	100B		35m	100B	600			Si	M248
30#	S6GN301	600	300	100B	5.1k	10m	410	100B	650m∅	300	100B		35m	100B	600			Si	M248a
31#	S6HN301	600	300	100B	5.1k	10m	410	100B	650m∅	300	100B		35m	100B	600			Si	M370
32#	TA3006R	600	300	100C	6.0k	10m			1.4	1.0k			15m	150C	600				S316
33▼#	YSD212P6K38	600	300	105B	6.6k	10m		185J	1.21	1.0k	150J		26m	185J	600			Si	S365
34	300U60A	600 †	300	120C	5 0k§	8.3m		200J	1.4	300 †	120C		12m⊠	120C	600			Si*	D09⊠
35	MR1239FB	600	300	135C	5 0k	8.3m		190J	.40 ∅	240	150C		35m	150C	600			Si	M227a⊠
36	MR1239FL	600	300	135C	5.0k	8.3m		190J	.40 ∅	240	150C		35m	150C	600			Si	M228b⊠
37	MR1239SB	600	300	135C	5.0k	8.3m		190J	.40 ∅	240	150C		35m	150C	600			Si	S199b⊠
38	MR1239SL	600	300	135C	5.0k	8.3m		190J	.40 ∅	240	150C		35m	150C	600			Si	S87c⊠
39#	30C6	600	300	150	4.5k							810m	4.5	150	1.5				
40#	S6EN290	600 %	310	125B	1 6k	20m		160B†	.975	340			50m	125B	600			Si*	M307
41#	S6FN290	600 %	310	125B	1.6k	20m		160B†	.975	340			50m	125B	600			Si*	M357c
42#	S6GN290	600 %	310	125B	1.6k	20m		160B†	.975	340			50m	125B	600			Si*	M357a
43♦#	S6HN290	600 %	310	125B	7.2k	10m		160B†	975m	340			50m	125B	600			Si*	M366a
44#	S30N700JA3	600	320	100C	4.8k	10m		175J	1.15	600	25A	2.0m	30m	175C	600			Si△	M378
45#	S30N700JA4	600	320	100C	4.8k	10m		175J	1.25	600	25A	2.0m	30m	175C	600			Si△	M378
46#	S6EN310	600 %	330	125B	1.7k	20m		160B†	.90	400			50m	125B	600			Si*	M307
47#	S6FN310	600 %	330	125B	1 7k	20m		160B†	.90	400			50m	125B	600			Si*	M357c
48#	S6GN310	600 %	330	125B	1.7k	20m		160B†	.90	400			50m	125B	600			Si*	M357a
49#	S6HN310	600 %	330	125B	1.7k	20m		160B†	.90	400			50m	125B	600			Si*	M366a
50#	S6EN300	600 %	340	125B	2.0k	20m		160B	900m	340			50m	125	600			Si*	M307
51▼#	S6HN300	600 %	340	125B	7.2k	10m		160B	900m	340			50m	125	600			Si*	M307
52#	S6EN350	600 %	370	125B	2.0k	20m		160B†	.90	400			50m	125B	600			Si*	M307
53#	S6FN350	600 %	370	125B	2.0k	20m		160B†	.90	400			50m	125B	600			Si*	M357c
54#	S6GN350	600 %	370	125B	2.0k	20m		160B†	.90	400			50m	125B	600			Si*	M357a
55♦#	S6HN350	600 %	370	125B	7.8k	10m		160B†	900m	400			50m	125B	600			Si*	M366a
56	A396M	600	400	70C	3.3k	8.3m		125C	1 3 ∅	400	25		12m	70C	600			Si	M377a
57#	SR400C12	600	400	100C	10k§	8.3m		150J	1.40	1.2k	25C		30m	150J	600			Si△	S310
58	1N3591	600	400	120C				190J	1 1	520	25C		75m	25C	600			Si	S83a△
59	A390M	600	400	145	4.5k			200J	.40	400	130C		12.	130C	600			Si△	M377a
60	400F60	600	400	150C	12k	4 0m		190J	1.1	450	25C		75m	25C	600			Si	M56b△⊠
61	MR1249FB	600	400	150C	8.0k	8.3m		190J	.40 ∅	400	150C		50m	150C	600			Si	M227b⊠
62	MR1249FL	600	400	150C	8.0k	8.3m		190J	.40 ∅	400	150C		50m	150C	600			Si	M228a⊠
63	MR1249SB	600	400	150C	8.0k	8.3m		190J	.40 ∅	400	150C		50m	150C	600			Si	S199c⊠
64	MR1249SL	600	400	150C	8.0k	8 3m		190J	.40 ∅	400	150C		50m	150C	600			Si	S87d⊠
65▼#	YSD211P6K38	600	410	105B	6.6k	10m		185J	1.21	1.0k	150J		26m	185J	600			Si	S365
66	450E60	600	450	150C	12k	4.0m		190J	1.1	450	25C		75m	25C	600			Si	S83a△⊠
67	450F60	600	450	150C	12k	4.0m		190J	1.1	450	25C		75m	25C	600			Si	M56b△⊠
68	783M	600	485	130C	5 0k	8.3m		190J	1.9	400	130C		10m⊠	130C	600			Si	
69#	S6GR311	600	490	100B	7.5k			175J	670m∅	490			25m		600			Si△	M522
70#	S6HR311	600	490	100B	7.5k			175J	670m∅	490			25m		600			Si△	M523
71	501V60B	600	500	120C	10k§	8.3m		200J	1.2	500 †	120C		16m∅	120C	600			Si△	S120g⊠
72#	150MA60	600	500	129B	9.0k	10m		175A	1.5 †	1.5k	175J		50m		600			Si	S8p
73#	1S1333R	600	500	130B	9.0k			175J	1.4	1.5k	25J		30m	175J	600			Si△	S12h
74	500UDF60A	600 †	500	130C	9.0k§	8.3m		200J	1 35 †	500 †	130C		30m	130C	600			Si	M448$
75	A295M	600	500	130C	7.0k	8.3m		200J					15m∅	130C				Si	S132a
76	A296M	600	500	130C	7.0k	8.3m		200J					15m∅	130C				Si	S247
77	501VR60B	600	500	135C	10k§	8.3m		200J	1.2	500 †	135C		16m∅	135C	600			Si△	S120g⊠
78▼#	1S2248	600	600	93C	10k§	8.3m		150J	1.85	1.9k	25C		30m	150J	600			Si△	M565
79#	FD500D12	600	600	93C	10k§	8.3m		150J	1.85	1.9k	25C		30m	150J	600			Si△	M565
80	784M	600	650	150C	8.0k	8.3m		190J	1.3	500	150C		10m⊠		600			Si	
81	MR1269	600	650	150C	12k	8.3m		190J	.40 ∅	650	150C		100m	150C	600			Si	M228c⊠
82#	S6BR502	600	750	100B	11k	10m	900	165J	625m∅	700			20m	100B	300			Si△	M429
83#	FD1000A12	600	800	106C	14k			150J	1.5 †	2.5k	25C		30m	150J	600			Si△	M509
84♦	801PD60B	600 †	800	135C	10k§	8.3m		200J	1.4	800 †	135C		16m∅	135C	600			Si△	J200b
85	A540M	600	1.0k		10k			200J	1.08		150C		50m	200J	700			Si△	M463
86	A570M	600	1.5k	75C	15k	8.3m		200J	400m∅		130C		50m	200J	600			Si	M463
87#	S8BR25	640 †	40	120B	250	20m		140B	1.2	40			20m		640			Si*	S122⊠
88#	S8CR25	640 †	40	120B	250	20m		140B	1.2	40			20m		640			Si*	S123⊠
89#	S8DR25	640 †	40	120B	250	20m		140B	1.2	40			20m		640			Si*	S125⊠
90#	S8ER25	640 †	40	120B	250	20m		140B	1.2	40			20m		640			Si*	S124⊠
91#	S8BR30	640 †	44	125B	250	20m		140B	1.1	44			16m		800			Si*	S122⊠
92#	S8CR30	640 †	44	125B	250	20m		140B	1.1	44			16m		800			Si*	S123⊠
93#	S8DR30	640 †	44	125B	250	20m		140B	1.1	44			16m		800			Si*	S125⊠
94#	S8ER30	640 †	44	125B	250	20m		140B	1.1	44			16m		800			Si*	S124⊠
95#	S8AN70	640 †	77	115B	450	20m		150B	1.0	70			30m		800			Si	F19
96#	S8BR70	640 †	77	115B	450	20m		150B	1.0	70			40m		800			Si	F19
97#	S8AN125	640 †	175	125B	1.1k	20m		150B	1.1	175			30m		800			Si	F19
98#	S20N800JA	640	285	70C	4 5k	10m		150J	1.25	600	25A	5.0m	30m	150C	640			Si△	M378⊠
99#	1S210/2SJ6A	650	.40	25	1.5	1		150	1.2	.50	25A	20u		25A	600			Si△	A164
100	ED3006	650 △	.50	50	20	8.3m	1.0	100A	1.5 △	1.0	25	10u	.03m	100	600			Si△	A1bk
101#	S8M2	650	.60	25A	8.0		7.3	125				1.0u	.05m	125J	650			Si△	D014
102	ED3006B	650 △	1.0	50	30	8 3m	1.0	100A	1.1 △	1.0	25	10u	.03m	100	600			Si△	A1bk
103#	S8CN1	650	1.5	40A	45		1.7	150A				10u	.25m	150J	650			Si△	A31n
104	S50△	650 ∅	3.0	80A$	100			150A	1.0	10	25	20u			500			Si△	S25
105#	SSiE2040	650	20	85C	250	10m		160J										Si△	S4p△
106#	SSiF2040	650	50	85C	500	10m		160J										Si△	S52c△
107#	SSiK2140	650	160	92C	2.7k	10m		160J	1.3	500	20J	200u	2.0m	150J	300			Si△*	S72m△
108#	SSiK0440	650	210	110C	2.7k	10m		150J	1.3	500	20J	200u	2.0m	150J	300			Si△*	M444#
109	1N2865	690	.70	25A	30			200A				50u			1.0k			Si△	A86
110	G5M3	700		150C	1.5k			175J	1.3	200	25C		5.0m	150C	700			Si	D08

SYMBOLS AND CODES EXPLAINED IN INTERPRETER

5. RECTIFIERS

IN ORDER OF (1) PIV, (2) MAX AVG FWD CURRENT (3) TEMPERATURE, and (4) TYPE No.

LINE No.	4 TYPE No.	1 PIV (V)	MAX AVG FWD DC CURRENT 2 Io (A)	3 at TEMP (°C)	MAX RATINGS @ 25°C SURGE CUR. PEAK 1 Cy (A)	PULSE WIDTH (s)	DISS. (W)	MAX. TEMP (°C)	MAXIMUM FORWARD VOLTAGE DROP Vf (V)	at If (A)	at TEMP (°C)	MAX. REVERSE CURRENT Ir @25°C & Vr (A)	Ir at T & Vr (A)	TEMP T (°C)	TEST VOLT Vr (V)	AVALANCHE RATINGS MAX V BKDN. (V)	MIN SLOPE (A/V)	DESCRIPTION MAT.	DWG. No.
1	1N886	700	05	25A$	50			200S	.60	.05			.02m		700			Si	A1bz
2	1N875	700	.10	25A$	1.0			200S	.60	.10			.02m		700			Si	A1bz
3	10R7B	700	10	25	60			175	2 0	.10	25	5.0u	.50m	150	700			Si	
4	1N864	700	.15	25A$	1.5			200S	60	15			02m		700			Si	A1bz
5	1N853	700	.20	25A$	2.0			200S	60	20			.02m		700			Si	A1bz
6	A1H1	700	20	25	60			175A	50		150	1 0u	50m	150	700			Si	A84a
7	A1H5	700	.20	25	60			175A	50		150	5.0u	50m	150	700			Si	A84a
8	A1H9	700	.20	25	60			175A	50		150	10u	50m	150	700	100	200u	Si	A84a
9	B1H1	700	.20	25	60			175A	.50		150	1.0u	.50m	150	700			Si	A1rx
10	B1H5	700	.20	25	60			175A	50		150	5 0u	.50m	150	700			Si	A1rx
11	B1H9	700	.20	25	60			175A	.50		150	10u	.50m	150	700	100	200u	Si	A1rx
12	K1H5	700	.20	50	60			150C	2.0	.20	25	5.0u	.50m	100C	700			Si	
13♦	1N2878	700	250m	25A				150S	2.0	250m	25A	500n			700	1.4k		Si	M122a
14♦	1N2879	700	250m	25A				150S	2 0	250m	25A	500n			700	1.4k		Si	A83w
15	1N1258	700	.28	25A	15			165A	1 0 Ø	28	25A		.50m	125A	700			Si	A53
16#	BYX60-700	700	400m	25A	2 5		600m	125A	1 2	400m	25A	450n	50u	100A	700			Si△	DO7
17	K2H5	700	40	50	60			150C	2 0	40	25	5 0u	.50m	100C	700			Si	
18	SM73	700	450m	50$	25			175A	1.5	800m	25	1 0u	500u	150	700			Si	A84
19	A2H4	700	.475	25A	25			175A	1.5	.50	25	1.0u△	.50m∅	150	700			Si	A84
20	1N3185	700	.50	25A	4.0	1		150A	2 0	25	25	.30u	.02m	100	700			Si	M82a
21	MT070	700	500m	25A	10		500m	175A	1.0	500m∅	25A	200n	25u	150A	700			Si	A60e
22	MT070A	700	500m	25A	10		500m	175A	1 0	500m∅	25A	25n	5.0u	150A	700			Si	A60e
23	5E7	700	500m	50	50 §			175	1 1	500m	50	2.0u	50u	100	770			Si△	DO27
24	.5J7	700	500m	50	50 §			175	1 1	500m	50	2.0u	50u	100	770			Si△	DO15
25	1T507	700 †	50 Ø	85A	35			100A	1.2	.30	25	10u	25m	100	700			Si	A3x
26	2T507	700 †	.50 Ø	85A	35			100A	1 2	30	25	10u	25m	100	700			Si	DO1
27	3T507	700 †	50 Ø	85A	35			100A	1.2	.30	25	10u	.25m	100	700			Si	DO13
28	4T507	700 †	50 Ø	85A	35			100A	1 2	.30	25	10u	25m	100	700			Si	DO7
29	ERD700	700 †	.50 Ø	85	35			100A	1 2	30	25	10u	25m	100	700			Si	M166
30	CP102	700	50	100					1.0		25								M84ae
31	S257	700	500m	100$	60				1.2	800m	25		500u	100	700			Si	A54
32	A2H1	700	.60	25	60			175A	50		150	1.0u	.50m	150	700			Si	A84a
33	A2H5	700	60	25	60			175A	.50		150	5.0u	.50m	150	700			Si	A84a
34	A2H9	700	.60	25	60			175A	.50		150	10u	.50m	150	700	100	200u	Si	A84a
35	B2H1	700	60	25	60			175A	50		150	1.0u	.50m	150	700			Si	A1rx
36	B2H5	700	.60	25	60			175A	.50		150	5.0u	50m	150	700			Si	A1rx
37	B2H9	700	60	25	60			175A	50		150	10u	50m	150	700	100	200u	Si	A1rx
38	K3H5	700	.60	50	60			150C	2.0	60	25	5.0u	.50m	100C	700			Si	
39	SM270	700	600m	50$	20			150	1.2	950m	25	10u			700			Si	A84
40#	1S46	700	.70	50A	25			150J	1.2	1 0	25A	5.0u	.50m	150A	700			Si△	DO1
41	1N2772	700	75	25A$	15			165S	1 8	75	25A	4.0u	10m	150	700			Si	A145
42	75R7B	700	.75	25	60			175	2.0	.75	25	5.0u	.50m	150	700			Si	
43	A3H1	700	75	25	60			175A	.50		150	1.0u	50m	150	700			Si	A84a
44	A3H5	700	75	25	60			175A	.50		150	5 0u	.50m	150	700			Si	A84a
45	A3H9	700	.75	25	60			175A	.50		150	10u	.50m	150	700	100	200u	Si	A84a
46	B3H1	700	75	25	60			175A	.50		150	1 0u	.50m	150	700			Si	A1rx
47	B3H5	700	.75	25	60			175A	.50		150	5.0u	.50m	150	700			Si	A1rx
48	B3H9	700	.75	25	60			175A	.50		150	10u	.50m	150	700	100	200u	Si	A1rx
49	CODI537	700	750m	25$	25			150	1.1	800m	25	1 0u			700			Si	A52g
50	CODI617	700	750m	25$	25			150	1.1	800m	25	1.0u			700			Si	A9j
51	7E7	700	750m	50	60 §			175	1.1	750m	25	2.0u	50u	100	770			Si△	DO27
52	7J7	700	750m	50	60 §			175	1.1	750m	25	2.0u	50u	100	770			Si△	DO15
53	A3H3	700 †	75	50A	35			175A	1.1	.50	25	10u△	.30m∅	150	700			Si	A84
54	DK757	700	750m	50A	60			175A	1.2	750m	25A	10u	100u	100	700			Si	DO27
55	LA900	700	75	50A	35			150C	1.0	.75	25A	2.0u				1 0k∅			A1ew
56	SM70	700	750m	50$	35			175†	1.1	500m	25	10u			700			Si	A84
57	K4H5	700	.80	50	60			150C	2.0	.80	25	5 0u	.50m	100C	50			Si	
58	A4H1	700	.85	25	60			175A	.50		150	1.0u	.50m	150	700			Si	A84a
59	A4H5	700	85	25	60			175A	.50		150	5.0u	.50m	150	700			Si	A84a
60	A4H9	700	85	25	60			175A	.50		150	10u	.50m	150	700	100	200u	Si	A84a
61	B4H1	700	.85	25	60			175A	.50		150	1.0u	.50m	150	700			Si	A1rx
62	B4H5	700	85	25	60			175A	.50		150	5.0u	.50m	150	700			Si	A1rx
63	B4H9	700	.85	25	60			175A	.50		150	10u	.50m	150	700	100	200u	Si	A1rx
64	SM170	700	850m	50$	45			150	1.0	1.5	25	10u			700			Si	A84
65	SM770	700	85	50	35			125A	1.0	.50	25	.01u	.20m	150	700			Si	A84
66#	DS0 9-07A	700	1.0		40	10m		150	1.20	3.0		5.0u	1.0m	150					
67	NS1007	700	1.0		60	8 3m			1 2	1 0		10u			700				
68	100R7B	700	1 0	25	60			175	2.0	1 0	25	5 0u	.50m	150	700			Si	
69	A5H1	700	1.0	25	60			175A	.50		150	1.0u	.50m	150	700			Si	A84a
70	A5H5	700	1.0	25	60			175A	.50		150	5.0u	.50m	150	700			Si	A84a
71	A5H9	700	1.0	25	60			175A	.50		150	10u	.50m	150	700	100	200u	Si	A84a
72	B5H1	700	1.0	25	60			175A	.50		150	1 0u	.50m	150	700			Si	A1rx
73	B5H5	700	1 0	25	60			175A	.50		150	5.0u	50m	150	700			Si	A1rx
74	B5H9	700	1.0	25	60			175A	.50		150	10u	.50m	150	700	100	200u	Si	A1rx
75	S1070	700	1.0	25A	35			175A	500m∅	250m	150A		500u∅	150A	700	1.0k		Si△	A1qf
76	CJ7	700	1.0	50	50			150	1.1	1 0	50	5.0u	200u	100	770			Si△	DO15
77	CL7	700	1 0	50A	50			150A	1.1	1.0	50A	5.0u	200u	100A	770			Si△	DO27
78	CM7	700	1.0	50	50			150	1.1	1 0	50	5 0u	200u	100	770			Si△	DO27
79	E7	700	1 0	50	75 §			175	1 1	1.0	25	2 0u	50u	100	770			Si△	DO27
80	EM7	700	1.0	50	75 §			175	1.1	1.0	25	2 0u	50u	100	770			Si△	DO41
81	J7	700	1.0	50	75 §			175	1.1	1.0	25	2.0u	50u	100	770			Si△	DO15
82	K5H5	700	1 0	50	60			150C	2.0	1.0	25	5.0u	.50m	100C	700			Si	
83	LAA1000	700	1 0	50A	50			150C	.90	1.0	25A	2.0u				1.0k∅			A1bc
84	CA102PA	700	1.0	55A$	60			150A	1 1	1 0	25		.30m	150	700			Si	A32
85	CC102PA	700	1 0	55A$	60			150A	1 1	1.0	25		.30m	150	700			Si	C8
86	CF102PA	700	1.0	55A$	60			150A	1.1	1.0	25		.30m	150	700			Si	F8
87#	BY127/700	700	1.0	60A	40	10		150J	1.5	5.0	25J	10u			1 0k			Si	DO27
88	CP102PA	700	1.0	75A	15			150A	1.2	1.0	25C		3.0m∅	125C	700			Si	C9
89	A5H2	700 †	1.0	100A	45			200A	1.0	.75	25	1.0u△	.20m∅	150	700			Si	A84
90	SM71	700	1.0	100$	45			200A	1 0	1 2	25	1.0u			700			Si	A84
91	SM517	700	1.0	100$	45			150†	1.0	1.0	25	10u			700			Si	A84
92	BY108	700	1 0	150C$	25			150C	.90	1.0	25C	4.0u	.50m	150C	700			Si	DO2
93	BY118△	700	1.0	150C$	25			150C	.80	1.0	25C	1.0u	.10m	150C	700			Si	DO2
94	BY128	700	1.0	150C$	25			150C	1.0	1 0	25	10u	1.0m	150C	700			Si	DO2
95	E1M3	700	1.0	150	200			175	1 3	1.0	150	10u	1.0m	150	700			Si	DO4
96	1N1225A	700	1.1	25A	25			145A	1.55	1.1	25A	50u		25A	700			Si	DO1
97	A6H1	700	1.2	25	60			175A	.50		150	1.0u	.50m	150	700			Si	A84a
98	A6H5	700	1 2	25	60			175A	.50		150	5 0u	50m	150	700			Si	A84a
99	A6H9	700	1.2	25	60			175A	.50		150	10u	.50m	150	700	100	200u	Si	A84a
100	B6H1	700	1 2	25	60			175A	.50		150	1 0u	.50m	150	700			Si	A1rx
101	B6H5	700	1.2	25	60			175A	.50		150	5.0u	50m	150	700			Si	A1rx
102	B6H9	700	1.2	25	60			175A	.50		150	10u	50m	150	700	100	200u	Si	A1rx
103	K6H5	700	1 2	50	60			150C	2.0	1.2	25	5.0u	.50m	100C	700			Si	
104#	DS1 2-07A	700	1.3		60	10m		150	1.20	4.0		5.0u	1.0m	150					
105	RA132PA	700	1.3	55A$	60			150A	1 2	1.3	25		.30m∅	150	700			Si	A34
106	1N1914	700 Ø	1.5	25A	30	16m	2 0	250	1 0	1.0	25	10u			700			Si△	A86
107	150R7B	700	1.5	25	60			175	2.0	1.5	25	5.0u	.50m	150	700			Si	
108	A7H1	700	1.5	25	60			175A	.50		150	1.0u	.50m	150	700			Si	A84a
109	A7H5	700	1.5	25	60			175A	.50		150	5.0u	.50m	150	700			Si	A84a
110	A7H9	700	1.5	25	60			175A	.50		150	10u	.50m	150	700	100	200u	Si	A84a

SYMBOLS AND CODES EXPLAINED IN INTERPRETER

5. RECTIFIERS

IN ORDER OF (1) PIV, (2) MAX AVG FWD CURRENT (3) TEMPERATURE, and (4) TYPE No.

LINE No.	TYPE No. [4]	PIV [1] (V)	MAX AVG FWD DC CURRENT Io [2] (A)	at TEMP [3] (°C)	MAX RATINGS @ 25°C SURGE CUR. PEAK 1 Cy (A)	PULSE WIDTH (s)	DISS. (W)	MAX. TEMP (°C)	MAXIMUM FORWARD VOLTAGE DROP Vf (V)	at If (A)	at TEMP (°C)	MAX. REVERSE CURRENT Ir @25°C & Vr (A)	Ir at T & Vr (A)	TEMP T (°C)	TEST VOLT Vr (V)	AVALANCHE RATINGS MAX V BKDN. (V)	MIN SLOPE (A/V)	DESCRIPTION MAT.	DWG. No.
1	A168-7†	700	1.5	25	50	8.0m		125	1.1	1.0	25	5.0u			770			Si	M575
2	B7H1	700	1 5	25	60			175A	.50		150	1 0u	.50m	150	700			Si	A1rx
3	B7H5	700	1.5	25	60			175A	.50		150	5.0u	.50m	150	700			Si	A1rx
4	B7H9	700	1 5	25	60			175A	.50		150	10u	.50m	150	700	100	200u	Si	A1rx
5	M1H1	700	1.5	25	250			175A	.50		150	2.0u	5.0m	150	700			Si	A1ep
6	M1H5	700	1.5	25	250			175A	.50		150	10u	5.0m	150	700			Si	A1ep
7	M1H9	700	1.5	25	250			175A	50		150	10u	5.0m	150	700	100	200u	Si	A1ep
8	1N5052	700 †	1.5	40A	50 §			170A	1.3	1 5	40A		.50m	170A	700			Si	DO27
9	1.5E7	700	1 5	50A	75 §			175A	1.1	1.5	25A	2 0u	50u	100	770			Si△	DO27
10	1.5J7	700	1.5	50	75 §			175	1.1	1.5	25A	2.0u	50u	100	770			Si△	DO15
11	K7H5	700	1 5	50	60			150C	2.0	1 5	25	5.0u	.50m	100	700			Si	
12	1N2397	700	1.5	55A	35			150A	1.2	1.5	25		.30m	150A	700			Si△	A32
13	1N2406	700	1.5	55A	35			150A	1.2	1.5	25		.30m	150A	700			Si△	C8
14	1N2415	700	1 5	55A	35			150A	1.2	1.5	25		.30m	150A	700			Si△	C9
15	1N2424	700	1 5	55A	35			150A	1.2	1.5	25		.30m	150A	700			Si△	F8
16▼#	AD2	700	1.5	60A	100	10m		140J	1 0	1 5	25A	10u			700			Si	A268
17▼	CTN700	700	1.5	75	50			175A	1.0			10u			700			Si	M594*
18▼	CTP700	700	1.5	75	50			175A	1.0			10u			700			Si	M594a*
19▼	VB700	700	1 5	75	50			175A	1 0			10u			700			Si	M594b*
20	1N1235A	700	1 6	50$	30				1.2	1 0	25	50u	500u	150	700			Si	S25a
21	1N1235B	700	1.6	50$	30				1.2	1 0	25	10u	300u	150	700			Si	S25a
22	S1270	700	1.6	120C	35		.15 ØØ	175J	1 0 Ø	1.0	25A		.10mØ	100C	700	1.8k		Si△	DO13△
23	1N1225	700	1.6	135C	20			175J	1.5	2 5	25J	500u	1.5m	150J	700			Si	DO1
24	1N1235	700	1 6	135C	20			175J	1 5	2.5	25J	500u	1.5m	150J	700			Si	S25
25	1N1225B	700 †	1.6	140C	25			175$	1.62	1.2	25	300uØ	10m△	25	700			Si	DO1
26	NS2007	700	2.0		200	8.3m			1.2	2.0		25u			700				
27	200R7B	700	2.0	25	60			175	2.0	2.0	25	5.0u	.50m	150	700			Si	
28	M2H1	700	2 0	25	250			175A	50		150	2.0u	5.0m	150	700			Si	A1ep
29	M2H5	700	2.0	25	250			175A	.50		150	10u	5.0m	150	700			Si	A1ep
30	M2H9	700	2.0	25	250			175A	50		150	10u	5.0m	150	700	100	200u	Si	A1ep
31	B172-70	700	2.0	50	60			150C	2.0	2.0	25	5.0u	50m	100	700			Si	
32▼	FW700†	700	2 0	50A	50			125A	900m	1.0	25A	5.0u						Si	M40a
33	K8H5	700	2.0	50	60			150C	2.0	2.0	25	5.0u	.50m	100	700			Si	
34	LAB1000	700	2.0	50A	80			150C	1 0	2.0	25A	15u				1.0kØ			A1bc
35#	DS2-07A	700	2 2		120	10m		150	1 2	3.0		5.0u	1 0m	150					
36	250R7B	700	2.5	25	250			175	2.0	2.5	25	10u	1 0m	150	700			Si	
37	M3H1	700	2 5	25	250			175A	.50		150	2.0u	5.0m	150	700			Si	A1ep
38	M3H5	700	2 5	25	250			175A	.50		150	10u	5.0m	150	700			Si	A1ep
39	M3H9	700	2 5	25	250			175A	50		150	10u	5 0m	150	700	100	200u	Si	A1ep
40	1N2531	700	2.5	150C$	50			150C	1.2	4.0	25C	4.0u	50m	150C	700			Si△	DO10
41	1N2542	700	2.5	150C$	50			150C	1 0	4.0	25C	1.0u	10m	150C	700			Si△	DO10
42	1N2553	700	2.5	150C$	50			150C	1.5	4.0	25C	10u	1.0m	150C	700			Si△	DO10
43	BAV208	700	2.5	150C$	50			150C	1.2	2.5	25C	4.0u	.50m	150C	700	840		Si	DO4
44	BAV218	700	2.5	150C$	50			150C	1.0	2.5	25C	1.0u	.10m	150C	700	840		Si	DO4
45	BAV228	700	2.5	150C$	50			150C	1.5	2.5	25C	10u	1.0m	150C	700	840		Si	DO4
46	BAV308	700	2.5	150C$	50			150C	1 2	2.5	25C	4.0u	50m	150C	700	840		Si	S35
47	BAV318	700	2.5	150C$	50			150C	1.0	2.5	25C	1.0u	.10m	150C	700	840		Si	S35
48	BAV328	700	2 5	150C$	50			150C	1.5	2.5	25C	10u	1.0m	150C	700	840		Si	S35
49	BY208	700	2.5	150C$	50			150C	1.2	2.5	25C	4.0u	50m	150C	700			Si△	DO4
50	BY218	700	2.5	150C$	50			150C	1.0	2.5	25C	1.0u	.10m	150C	700			Si△	DO4
51	BY228	700	2 5	150C$	50			150C	1.5	2.5	25C	10u	1.0m	150C	700			Si△	DO4
52	BY308	700	2.5	150C$	50			150C	1.2	2 5	25C	4.0u	.50m	150C	700			Si	S35
53	BY318	700	2 5	150C$	50			150C	1 0	2.5	25C	1.0u	.10m	150C	700			Si	S35
54	BY328	700	2.5	150C$	50			150C	1.5	2 5	25C	10u	1.0m	150C	700			Si	S35
55	NS3007	700	3 0		300	8 3m			1.2	3.0		25u			700				
56	300R7B	700	3.0	25	250			175	2.0	3 0	25	10u	1.0m	150	700			Si	
57	LAC1000	700	3.0	25A	300			150C	1.0	3.0	25A	45u				1.1k			A1ey
58	M4H1	700	3.0	25	250			175A	.50		150	2.0u	5 0m	150	700			Si	A1ep
59	M4H5	700	3 0	25	250			175A	.50		150	10u	5.0m	150	700			Si	A1ep
60	M4H9	700	3 0	25	250			175A	.50		150	10u	5.0m	150	700	100	200u	Si	A1ep
61	A138-7†	700	3 0	50	50	8.0m		150	1.1	3 0	25	5 0u			770			Si	M79c
62	CH302PA	700	3.0	50A	15			150A	1.2	1 0	25C		3 0mØ	125C	700			Si	S152a
63	CK302PA	700	3.0	50A	15			150A	1.2	1 0	25C		3.0mØ	125C	700			Si	S153
64	CS302PA	700	3.0	50A	15			150A	1.2	1.0	25C		3 0mØ	125C	700			Si	S152
65	LR703	700	3.0	50A	200	8.3m		170A	1.0	3 0		10u	500u	150A	700			Si	A52d
66	S57	700	3 0	80$	20				1.3	5.0	25	100u			700			Si	S48
67#	S7BR2	700 %	3.0	95B	53	20m		130B	550mØ	1 5	25		2.0m	125	700			Si	S81
68	3C70	700	3.0	150				190	1.1	6.0	25		.50m	150	700			Si	DO4△Ø
69	E2M3	700	3 0	150	200			175	1.3	3 0	150	10u	1.0m	150	700			Si	DO4
70#	S8M3	700 %	3.0	150J	180			150J	1.2	3.0			500u		800			Si△	A52d
71	350R7B	700	3.5	25	250			175	2.0	3.5	25	10u	1.0m	150	700			Si	
72	400R7B	700	4 0	25	250			175	2.0	4.0	25	10u	1.0m	150	700			Si	
73	450R7B	700	4.5	25	250			175	2.0	4 5	25	10u	1.0m	150	700			Si	
74	500R7B	700	5 0	25	250			175	2.0	5 0	25	10u	1.0m	150	700			Si	
75#	DS6-07A	700	5.0	132	180	10m		150	1.35	15		5.0u	2.0m	150					
76	407P	700	5.0	150C	125	8.3m		175J	1.1	5.0	25C		2.0mØ	175J	700			Si	DO4
77	E3M3	700	5 0	150	200			175	1.3	5.0	150	10u	1.0m	150	700			Si	DO4
78	F1M3	700	5.0	150C	200			175J	1.3	30	25C		1 0m	150C	700			Si	DO5
79	550R7B	700	5 5	25	250			175	2.0	5.5	25	10u	1.0m	150	700			Si	
80	NS6007	700	6.0		300	8.3m			1 2	6.0		25u			700				
81	600R7B	700	6.0	25	250			175	2.0	6.0	25	10u	1.0m	150	700			Si	
82	SLA700†	700	6.0	25				150A				1 0u	75u	100	700				M545
83#	S7AN6	700 %	6.0	125B	125		6 5	150J	470mØ	6.0 †			2.0m	125B				Si△	DO4Ø
84	1N2557	700	6 0	150C$	150			150C	1.2	10	25C	4.0u	.50m	150C	700			Si△	DO10
85	1N2561	700	6 0	150C$	150			150C	1.0	10	25C	1.0u	.10m	150C	700			Si△	DO10
86	1N2572	700	6.0	150C$	150			150C	1.5	10	25C	10u	1.0m	150C	700			Si△	DO10
87	1N3987	700	6.0	150C	50			150	1.5				1.0m	150	700			Si△	DO4
88	6A700	700	6 0	150C	150			200J	1.4 †	6.0	25C		.90m	150C	700			Si△	DO4
89	6C70	700	6.0	150				190	1.2	12	25		.50m	150	700			Si	DO4△Ø
90	6F70A	700	6.0	150C	50			190A	55	6.0	150		1.4m	150	700			Si	S19jØ
91	6F70B	700	6.0	150C	160			200A	55	6.0	150		1.2m	150	700			Si	S19jØ
92	441P	700	6.0	150C$	150			150C	1.4				.70m	150C	700			Si	DO4
93	446P	700	6 0	150C$	150			150C	1 4				.70m	150C	700			Si	DO4
94	BAV408	700	6.0	150C$	150			150C	1 2	6.0	25C	4 0u	50m	150C	700	840		Si	S35
95	BAV418	700	6.0	150C$	150			150C	1 0	6 0	25C	1 0u	.10m	150C	700	840		Si	S35
96	BAV428	700	6 0	150C$	150			150C	1.5	6 0	25C	10u	1.0m	150C	700	840		Si	S35
97	BAV708	700	6.0	150C$	150			150C	1.2	6 0	25C	4 0u	.50m	150C	700	840		Si	DO4
98	BAV718	700	6.0	150C$	150			150C	1 0	6 0	25C	1.0u	10m	150C	700	840		Si	DO4
99	BAV728	700	6.0	150C$	150			150C	1 5	6.0	25C	10u	1.0m	150C	700	840		Si	DO4
100	BY408	700	6 0	150C$	150			150C	1 2	6.0	25C	4 0u	.50m	150C	700			Si	S35
101	BY418	700	6 0	150C$	150			150C	1.0	6.0	25C	1.0u	10m	150C	700			Si	S35
102	BY428	700	6.0	150C$	150			150C	1.5	6.0	25C	10u	1.0m	150C	700			Si	S35
103	BY708	700	6.0	150C$	150			150C	1 2	6.0	25C	4 0u	.50m	150C	700			Si△	DO4
104	BY718	700	6.0	150C$	150			150C	1.0	6.0	25C	1 0u	10m	150C	700			Si△	DO4
105	BY728	700	6.0	150C$	150			150C	1 5	6 0	25C	10u	1.0m	150C	700			Si△	DO4
106	E4M3	700	6.0	150	200			175	1.3	6 0	150	10u	1.0m	150	700			Si	DO4
107	KR602PA	700	6.0	150S$	75			175S	1.2	6.0	150S		1.0m	150S	700			Si	DO10
108	KS602PA	700	6.0	150C$	75			175C	1 2 △	6.0	25		3.0mØ	150C	700			Si△	DO4
109	E5M3	700	8.0	150	200			175	1 3	8 0	150	10u	1.0m	150	700			Si	DO4
110#	DS9-07A	700	9 0	125	240	10m			1 3	27									

SYMBOLS AND CODES EXPLAINED IN INTERPRETER

5. RECTIFIERS

IN ORDER OF (1) PIV, (2) MAX AVG FWD CURRENT (3) TEMPERATURE, and (4) TYPE No.

LINE No.	4 TYPE No.	1 PIV (V)	MAX AVG FWD DC CURRENT 2 Io (A)	3 at TEMP (°C)	MAX RATINGS @ 25°C SURGE CUR. PEAK 1 Cy (A)	PULSE WIDTH (s)	DISS. (W)	MAX. TEMP (°C)	MAXIMUM FORWARD VOLTAGE DROP Vf (V)	at If (A)	at TEMP (°C)	MAX. REVERSE CURRENT Ir @25°C & Vr (A)	Ir at T & Vr (A)	TEMP T (°C)	TEST VOLT Vr (V)	AVALANCHE RATINGS MAX V BKDN. (V)	MIN SLOPE (A/V)	DESCRIPTION MAT.	DWG. No.
1#	S7AN12	700 %	10	125B	210			150J	500mØ	9 5	25B		2.0m	125B				Si△	DO4Ø
2	408P	700	10	145C	175	8.3m		175J	1.2	10	25C		2.0mØ	175J	700			Si	DO4
3	E6M3	700	10	150	200			175	1.3	10	150	10u	1.0m	150	700			Si	DO4
4	F2M3	700	10	150C	200			175J	1.3	30	25C		1.0m	150C	700			Si	DO5
5	1N2583	700	12	150C$	250			150C	1 2	20	25C	8 0u	1.0m	150C	700			Si△	DO10
6	1N2594	700 Ø	12	150C	250			150C	1.0	12		2 0u	.20m	150C	700			Si△	DO10
7	1N2605	700	12	150C$	250			150C	1 5	20	25C	20u	2 0m	150C	700			Si△	DO10
8	1N3670	700	12	150C	200													Si△	DO4
9	1N3670A	700	12	150C$	240			200C	1.35				90mØ	150C	700			Si	DO4Ø
10	1N4012	700	12	150C	200			175A	1 3	12	150A	10u	.50m	150A	700			Si	DO4
11	12A700	700	12	150C	240			200J	1.35 †	12	25C		90m	150C	700			Si△	DO4
12	12C70	700	12	150				190	1.5	24	25C		1.0m	150	50			Si	DO4△Ø
13	404P	700	12	150C$	240			150C	1.35				.90mØ	150C	700			Si	DO4
14	437P	700	12	150C$	240			150C	1 35				.90mØ	150C	700			Si	DO4
15	BAV508	700	12	150C$	250			150C	1.2	12	25C	8 0u	1.0m	150C	700	840		Si	S35
16	BAV518	700	12	150C$	250			150C	1.0	12	25C	2.0u	20m	150C	700	840		Si	S35
17	BAV528	700	12	150C$	250			150C	1 5	12	25C	20u	2 0m	150C	700	840		Si	S35
18	BAV808	700	12	150C$	250			150C	1 2	12	25C	8.0u	1.0m	150C	700	840		Si	DO4
19	BAV818	700	12	150C$	250			150C	1.0	12	25C	2.0u	.20m	150C	700	840		Si	DO4
20	BAV828	700	12	150C$	250			150C	1.5	12	25C	20u	2.0m	150C	700	840		Si	DO4
21	BY508	700	12	150C$	250			150C	1.2	12	25C	8.0u	1.0m	150C	700			Si	S35
22	BY518	700	12	150C$	250			150C	1.0	12	25C	2 0u	.20m	150C	700			Si	S35
23	BY528	700	12	150C$	250			150C	1.5	12	25C	20u	2.0m	150C	700			Si	S35
24	BY808	700	12	150C$	250			150C	1 2	12	25C	8.0u	1.0m	150C	700			Si△	DO4
25	BY818	700	12	150C$	250			150C	1.0	12	25C	2 0u	20m	150C	700			Si△	DO4
26	BY828	700	12	150C$	250			150C	1.5	12	25C	20u	2.0m	150C	700			Si	DO4
27	E7M3	700	12	150	200			175	1 3	12	150	10u	1 0m	150	700			Si	DO4
28	UR123PA	700	12	150S$	240			175S	1 2	12	25		3.0m	150S	700			Si	DO10
29	US123PA	700	12	150C$	240			175C	1.2 △	12	25A		3 0mØ	150C	700			Si△	DO4
30#	S7AN15	700	15	120B	220			150J	490mØ	15			3.0m		700			Si△	S324Ø
31#	S7BN15	700	15	120B	220			150J	490mØ	15			3.0m		700			Si△	S320Ø
32	368P	700	15	125C	240	8 3m		180J	1.3	15	25C		2.0mØ	130C	700			Si	DO4
33	409P	700	15	125C	250	8.3m		175J	1.3	15	25C		2.0mØ	175J	700			Si	DO4
34	F3M3	700	15	150C	200			175J	1.3	30	25C		1 0m	150C	700			Si	DO5
35	2070	700	16 5	25A	200		4.0 Ø	150A	600mØ	19	25A		1.0mØ	150C	700	1.0k		Si△	DO4△#
36#	S7BR8	700 %	18	120B	188		18	140B	.60 Ø	18	25		10m	125	700			Si	S122a
37	1N2278	700	20	25$	400			150	600m	20	25		1 0m	150	700			Si△	DO4
38#	S7AN20	700	20	120B	250			150J	480mØ	20			3 0m		700			Si△	S324Ø
39#	S7BN20	700	20	120B	250			150J	480mØ	20			3 0m		700			Si△	S320Ø
40#	DS22-07A	700	20	125	380	10m		150	1 4	60		10u	4 0m	150					
41	F4M3	700	20	150C	600			175J	1 3	50	25C		2 0m	150C	700			Si	DO5
42	2170	700	22	120C	200			175J	600mØ	22	25A		1.0mØ	150C	700	1 0k		Si△	DO4△
43	S2170	700	22	120C	200		1 0 ØØ	175J	600mØ	22	25A		1 0mØ	150C	700	1.0k		Si△	DO4△
44	25C70	700	25	140				190J	1 0	25	25C		20m	25	700			Si	DO5△Ø
45	25F70	700	25	140				190J	1 0	25	25C		20m	25	700			Si	M56△Ø
46	F5M3	700	25	150C	600			175J	1.3	90	25C		2 0m	150C	700			Si	DO5
47	3170	700	30	25A	200		4 0 Ø	150A	600mØ	34	25A		1 0mØ	150C	700	1 0k		Si△	DO5△#
48#	S7AN31	700	30	120B	347			150J	600mØ	30			4 0m		700			Si△	S325Ø
49#	S7BN31	700	30	120B	347			150J	600mØ	30			4 0m		700			Si△	S321Ø
50	G3M3	700	30	150C	1 5k			175J	1 3	200	25C		5 0m	150C	700			Si	DO8
51	3270	700	33	25A	600		7 0 Ø	150A	600mØ	45	25A		2 0mØ	150C	700	1 0k		Si△	DO5△Ø
52#	D22-700B	700	35	80C	500 §	10m		150J	1.35	40	25J	1.0m		25J	700			Si	S4u%
53#	D22-700C	700	35	80C	500 §	10m		150J	1 35	40	25J	1.0m		25J	700			Si	S69e%
54	1N3765	700	35	140C$	400			190B	1 8				5 0m	140B	700			Si	DO5
55	35C70△	700	35	140	900			190J	1 1	50	25		20m	25	700			Si	DO5△Ø
56	35F70	700	35	140	900			190J	1 1	50	25		20m	25	50			Si	M56△Ø
57#	DS42-07A	700	40	120	1 1k	10m		150	1.15	60		20u	4.0m	150					
58#	S7AN40	700	40	120B	485			150J	500mØ	40			4 0m		700			Si△	S325Ø
59#	S7BN40	700	40	120B	485			150J	500mØ	40			4.0m		700			Si△	S321Ø
60	40HF70	700	40	140C	500 §	8 3m		180J	1 3	40 †	140C		7 0mØ	140C	700			Si△	S21eØ
61	G4M3	700	40	150C	1 5k			175J	1 3	200	25C		5 0m	150C	700			Si	DO8
62	1N2456	700	45	60C	300			175B	1 1	20	25		5.0mØ	150B	700			Si△	DO5
63#	D42-700	700	50	115C	1.0k§	10m		150J	1 15	60	25J	1 0m		25J	700			Si	S171q%
64	S3470	700	50	120C	600		2 0 ØØ	175J	600mØ	50	25A		2 0mØ	150C	700	1.0k		Si△	DO5△
65	50C70	700	50	140	400	1	55	190J	1 1	50	25		20m	150	50			Si	DO5△Ø
66	1N1688	700	50	150C	700	8.3m		165C	1.2	1.1	150C		25m	150C	700			Si	S8q
67#	S500-7	700	55	50A$	3 7k	20m		120A	1 2 △	500	50A	1 0m△			700			Si	M189
68#	S7AN55	700	55	125B	935			150J	500mØ	55			6 0m		700			Si△	Ø
69#	S7BN55	700	55	125B	935			150J	500mØ	55			6 0m		700			Si△	S322Ø
70#	S7GN55	700	55	125B	935			150J	500mØ	55			6.0m		700			Si△	S322Ø
71	1N2468	700	60	60C	450			175B	1 1	30	25		5.0mØ	150B	700			Si△	DO5
72	H5M3	700	60	150C	3 0k			175J	1.3	300	25C		10m	150C	700			Si	DO9
73	402P	700	70	110C	1.0k	8 0m		200J	1 15	40	25C		1 6m	150C	700			Si	DO5
74	435P	700	70	110C	1 0k	8 0m		200J	1 15	40	25C		1.6m	150C	700			Si	DO5
75#	S7AN71	700	70	120B	1.2k			150J	470mØ	70			6 0m		700			Si△	Ø
76#	S7BN71	700	70	120B	1.2k			150J	470mØ	70			6 0m		700			Si△	S323Ø
77#	S7GN71	700	70	120B	1 2k			150J	470mØ	70			6 0m		700			Si△	S322Ø
78	70H70	700	70	125C	1 2k§	8 3m		200J	1.3	70 †	125C		7mØ	125C	700			Si*	DO5Ø
79	70H70A	700 †	70	125C	1 2k§	8.3m		200J	1.3	70	125C		7mØ	125C	700			Si△	DO5Ø
80	J4M3	700	70	150C	4 0k			175J	1 2	300	25C		10m	150C	700			Si	DO9
81	J5M3	700	70	150C	4 0k			175J	1 2	300	25C		10m	150C	50			Si	DO9
82	75E70	700	75	150C	850	4 0m		190J	1.0	90	25C		40m	25C	700			Si	S83a△Ø
83	75F70	700	75	150C	850	4 0m		190J	1 0	90	25C		40m	25C	700			Si	M56a△Ø
84	4170	700	92	25A	1.5k		12 Ø	150A	600mØ	120	25A		5 0mØ	150C	700	1.0k		Si△	DO8△#
85	FS503PA	700	100	80C$	950			175C	1 1	50	25		10m	150C	600			Si	DO8
86	A70S	700	100	130B	1 6k	8 3m		200J	600mØ	100	130B		6.0m	130B	700			Si	DO8
87	A71S	700	100	130B	1 6k	8.3m		200J	600mØ	100	130B		6.0m	130B	700			Si	DO8
88	100E70	700	100	150C	2 0k	4.0m		190J	1 0	140	25C		40m	25C	700			Si	S83△Ø
89	100F70	700	100	150C	2 0k	4 0m		190J	1 0	140	25C		40m	25C	700			Si	M56a△Ø
90	150L70A	700 †	100	150C	3 0k§	8 3m		200J	1.2	150 †	150C		11mØ	150C	700			Si*	DO30Ø
91	S4270	700	104	120C	1 5k		2 5 ØØ	175J	600mØ	104	25A		5 0mØ	150C	700	1.0k		Si△	DO8△
92#	S12P700E	700	110	75C	2 0k	10m		175J	1 35	300	25A	1.0m	15m	175C	700			Si△	F56m
93#	S10N700E3	700	125	100C			160	150	97	125	100C	6.0m	20m	100C	700			Si	F56m
94#	S10N700E4	700	125	100C			160	150	1 03	125	100C	6 0m	20m	100C	700			Si	F56m
95#	S10N700E5	700	125	100C			160	150	1 08	125	100C	6.0m	20m	100C	700			Si	F56m
96	45L70	700	150	70A	3 0k§	10m		190J	.52 Ø	150 †			20mØ		700			Si*	DO30Ø
97	FS703PA	700	150	75C$	1 2k			175C	1 1	70	25		10m	150C	700			Si	DO8
98#	S11P700E	700	150	75C	2 2k	10m		175J	1 35	300	25A	1 0m	15m	175C	700			Si△	F56m
99#	SD703K	700	150	75C	2.2k	10m		175J	1.35	300	25A	1 0m	15m	175C	700			Si△	Ø
100#	S7PN125	700 %	150	110B	3.3k			150J	1 1	150			30m		700			Si*	S319Ø
101#	S7BR125	700 %	150	115B	3 3k			150J	1 1	150			40m		700			Si*	F19
102#	S7KN125	700 %	150	115B	3 3k			170J	1.1	150			30m		700			Si*	F80Ø
103#	S7LN125	700 %	150	125B	3.3k			150J	1.1	150			30m		700			Si*	M521Ø
104	150K70A	700 †	150	150C	3 0k§	8.3m		200J	1.2	150 †	150C		11mØ	150C	700			Si*	DO8Ø
105#	DS110-07A	700	160	75	3.2k	10m		150	1.4	500		40u	6.0m	150					
106#	D100-700	700	160	95C	1.8k§	10m		150J	1 05	90	25J	3 0m		25J	700			Si	S96b%
107	DRS167	700	160	115C	2 5k	8 3m	170	175J	1.45	160 †	115C	5 0m	12m	115C	700			Si△	S210aØ
108	S5170	700	160	120C	2.2k		3 0 ØØ	175J	600mØ	160	25A		10mØ	150C	700	1 0k		Si△	DO9△
109	1N3270	700 †	160	125C	2 0k			190J	1 25	160	125C		12m	125C	700			Si	DO9Ø
110	160E70	700	160	150C	5.0k	4 0m		190J	1.0	160	25C		40m	25C	700			Si	S83△Ø

SYMBOLS AND CODES EXPLAINED IN INTERPRETER

5. RECTIFIERS

IN ORDER OF (1) PIV, (2) MAX AVG FWD CURRENT (3) TEMPERATURE, and (4) TYPE No.

LINE No.	TYPE No.	1 PIV (V)	MAX AVG FWD DC CURRENT 2 Io (A)	3 at TEMP (°C)	MAX RATINGS @ 25°C SURGE CUR. PEAK 1 Cy (A)	PULSE WIDTH (s)	DISS. (W)	MAX. TEMP (°C)	MAXIMUM FORWARD VOLTAGE DROP Vf (V)	at If (A)	at TEMP (°C)	MAX. REVERSE CURRENT Ir @25°C & Vr (A)	Ir at T & Vr (A)	TEMP T (°C)	TEST VOLT Vr (V)	AVALANCHE RATINGS MAX V BKDN. (V)	MIN SLOPE (A/V)	DESCRIPTION MAT.	DWG No.
1	160F70	700	160	150C	5.0k	4 0m		190J	1.0	160	25C		40m	25C	700			Si	M56a△⊘
2	175E70	700	175	150C	5 0k	4.0m		190J	1.0	175	25C		40m	25C	700			Si	S83△⊘
3	175F70	700	175	150C	5.0k	4.0m		190J	1.0	175	25C		40m	25C	700			Si	M56a△⊘
4#	S13N700E	700	190	75C	2.5k	10m		175J	1.35	300	25A	1 0m	15m	175C	700			Si△	F56m
5#	S20P700JA	700	200	100C	4.0k	10m		175J	1.25	600	25A		30m	175C	700			Si△	
6	DRS207	700	200	110C	3.5k	8.3m	220	175J	1.40	200 †	110C	5.0m	12m	110C	700			Si△	S210a⊘
7	S7BN200	700 %	200	120B	4.0k		250	150B	600m⊘	190	25B		40m	125C	700			Si	F19a
8	1N3171	700	240	105C	3 0k	8 3m		175C	1.9	240	105C		16m	105C	700			Si	DO9
9	1N3171A	700 *	240	120C	3.0k			190J	1.25	240	25C		16m	125C	700			Si	S14e
10	240E70	700	240	150C	7.5k	4.0m		190J	1.0	240	25C		50m	25C	700			Si	S83△⊘
11	240F70	700	240	150C	7.5k	4.0m		190J	1.0	240	25C		50m	25C	700			Si	M56a△⊘
12	A96S	700	250	70C	3.3k	8.3m		125J	1.25	250	25		12m						
13	A97S	700	250	70C	3 3k	8.3m		125J	1 25	250	25J		12m						
14	1N2065	700	250	100C	4.5k§			200C	1.3 †	250	135C		17m	135	560			Si	DO9
15#	SSiL9940	700	250	100C	6.1k	10m		150J	1.3	785	25J		40m	150J				Si△*	M572a
16	DRS247	700	250	110C	4.5k	8.3m	280	175J	1.40	250 †	110C	5.0m	12m	110C	700			Si△	S210a⊘
17	S5370	700	250	120C	4.0k		4 0 ⊘⊘	175J	600m⊘	250	25A		10m⊘	150C	700	1.0k		Si△	DO9△
18	70U70A	700 †	250	130C	4.5k§	8.3m		200J	1.3	250 †	130C		11m⊘	130C	700			Si*	DO9⊘
19	A90S	700	250	130B	4.5k	8.3m		200J	400m⊘	250	130B		11m	130B	700			Si	DO9
20	A91S	700	250	130B	4 5k	8.3m		200J	400m⊘	250	130B		11m	130B	700			Si	DO9
21	70S70	700	250	135C	4.5k§	8.3m		200J	1.25	250 †	135C		25m⊘	135C	700			Si*	S8b2⊘
22	70T70	700	250	135C	4.5k§	8.3m		200J	1.25	250 †	135C		25m⊘	135C	700			Si*	S8b1⊘
23#	S21N700H	700	270	75C	3.4k	10m		175J	1.45	600	25A	30m	80m	175C	700			Si△	M199
24	1N4053	700	275	120C	5.0k			190J	1 35	275	120C		15m	120C	700			Si	DO9⊘
25	275E70	700	275	150C	7.5k	4.0m		190J	1 0	275	25C		50m	25C	700			Si	S83△⊘
26	275F70	700	275	150C	7.5k	4.0m		190J	1.0	275	25C		50m	25C	700			Si	M56a△⊘
27#	S7EN270	700 %	290	125B	1.5k	20m		160B†	.975	34			50m	125B	700			Si	M307
28#	S7FN270	700 %	290	125B	1 5k	20m		160B†	.975	.34			50m	125B	700			Si	M357c
29#	S7GN270	700 %	290	125B	1.5k	20m		160B†	.975	.34			50m	125B	700			Si	M357a
30♦#	S7HN270	700 %	290	125B	7.2k	10m		160B†	975m	340			50m	125B	700			Si*	M366a
31#	S7EN301	700	300	100B	5.1k	10m	410	100B	650m⊘	300	100B		35m	100B	700			Si	M307
32#	S7FN301	700	300	100B	5.1k	10m	410	100B	650m⊘	300	100B		35m	100B	700			Si	M248
33#	S7GN301	700	300	100B	5.1k	10m	410	100B	650m⊘	300	100B		35m	100B	700			Si	M248a
34#	S7HN301	700	300	100B	5.1k	10m	410	100B	650m⊘	300	100B		35m	100B	700			Si	M370
35	300U70A	700 †	300	120C	5.0k§	8.3m		200J	1.4	300 †	120C		11m⊘	120C	700			Si*	DO9⊘
36#	S7EN290	700 %	310	125B	1.6k	20m		160B†	.975	.34			50m	125B	700			Si	M307
37#	S7FN290	700 %	310	125B	1.6k	20m		160B†	.975	340			50m	125B	700			Si*	M357c
38#	S7GN290	700 %	310	125B	1.6k	20m		160B†	.975	340			50m	125B	700			Si*	M357a
39♦#	S7HN290	700 %	310	125B	7.2k	10m		160B†	975m	340			50m	125B	700			Si*	M366a
40#	SSiL9840	700	320	96C	6.7k	10m		150J	1.35	1.0k	25J		40m	150J				Si△*	M572
41#	S30N800JA3	700	320	100C	4.8k	10m		175J	1.15	600	25A	2.0m	30m	175C	700			Si△	M378
42#	S30N800JA4	700	320	100C	4.8k	10m		175J	1 25	600	25A	2.0m	30m	175C	700			Si△	M378
43#	S7EN310	700 %	330	125B	1.7k	20m		160B†	.90	400			50m	125B	700			Si*	M307
44#	S7FN310	700 %	330	125B	1 7k	20m		160B†	.90	400			50m	125B	700			Si*	M357c
45#	S7GN310	700 %	330	125B	1.7k	20m		160B†	.90	400			50m	125B	700			Si*	M357a
46#	S7HN310	700 %	330	125B	1.7k	20m		160B†	.90	400			50m	125B	700			Si*	M366a
47#	S7EN300	700 %	340	125B	2.0k	20m		160B	900m	340			50m	125	700			Si*	M307
48▼#	S7HN300	700 %	340	125B	7.2k	10m		160B	900m	340			50m	125	700			Si*	M307
49#	DS250-07L	700	350		6.0k	10m		150	1.20										
50#	S7EN350	700 %	370	125B	2.0k	20m		160B†	.90	400			50m	125B	700			Si*	M307
51#	S7FN350	700 %	370	125B	2.0k	20m		160B†	.90	400			50m	125B	700			Si*	M357c
52#	S7GN350	700 %	370	125B	2.0k	20m		160B†	.90	400			50m	125B	700			Si*	M357a
53♦#	S7HN350	700 %	370	125B	7 8k	10m		160B†	900m	400			50m	125B	700			Si*	M366a
54	A396S	700	400	70C	3.3k	8 3m		125C	1.3 ⊘	400	25		12m	70C	700			Si	M377a
55#	D250-700	700	400	80C	5.5k§	10m		150J	1.10	220	25J	5 0m		25J	700			Si	M486%
56	A390S	700	400	145	4 5k			200J	400m	400	130C		12m	130C	700			Si△	M377a
57	400E70	700	400	150C	12k	4.0m		190J	1.1	450	25C		75m	25C	700			Si	S83a△⊘
58	400F70	700	400	150C	12k	4.0m		190J	1.1	450	25C		75m	25C	700			Si	M56b△⊘
59#	SSiN9940	700	450	100C	11k	10m		150J	1.25	1.4k	25J		50m	150J				Si△*	M573
60	450E70	700	450	150C	12k	4.0m		190J	1.1	450	25C		75m	25C	700			Si	S83a△⊘
61	450F70	700	450	150C	12k	4.0m		190J	1 1	450	25C		75m	25C	700			Si	M56b△⊘
62#	S7GR311	700	490	100B	7 5k			175J	670m⊘	490			25m		700			Si△	M522
63#	S7HR311	700	490	100B	7.5k			175J	670m⊘	490			25m		700			Si△	M523
64#	D300-700	700	500	80C	5 5k§	10m		150J	1.20	400	25J	5.0m		25J	700			Si	M486a%
65	500UDF70A	700 †	500	130C	9.0k§	8 3m		200J	1.35 †	500 †	130C		30m	130C	700			Si	M448$
66	A295S	700	500	130C	7.0k	8.3m		200J					15m⊘	130C				Si	S132a
67	A296S	700	500	130C	7.0k	8.3m		200J					15m⊘	130C				Si	S247
68#	D450-700	700	700	85C	10k§	10m		150J	1 10	500	25J	6.0m		25J	700			Si	M486b%
69#	S7BR502	700	750	100B	11k	10m	900	165J	625m⊘	700			20m	100B	300			Si△	M429
70	A540S	700	1 0k		10k			200J	1.08		150C		50m	200J	800			Si△	M463
71	A570S	700	1 5k	75C	15k	8.3m		200J	400m⊘		130C		50m	200J	700			Si	M463
72	JAN1N547	720 *	.25	150A$	15	8.0m		150A	1 2	.50	25A	10u	35m⊘	150A	600			Si	A6d
73	JAN1N649	720	400m	25A	5.0 §	8.3m		150A	1.0 †	400m	25	50n	25u	150A	600			Si	A1dd
74	1N2117	720	750m	50$								1.0u			720			Si	DO3
75	JAN1N3613	720	1.0	100A	30	8.3m		175A	1.1 †	1.0	25	1.0u	300u	150A	600			Si	A1rt
76	JAN1N1616,R	720 *	10	25C	100	8.3m		150C	1.5 †	15	25	50u	.50m	150C	800			Si	DO4
77	1N5435	720	12	25A	200			175A	1.1	12	25A	150u	300u	175A	600			Si	S292
78	JAN1N1190,R	720	35	150C	500	8.3m		150A	1.4 †	110	25	20u	3.0m	150C	600			Si	DO5
79#	S9BR25	720 †	40	120B	250	20m		140B	1.2	40			20m		720			Si*	S122⊘
80#	S9CR25	720 †	40	120B	250	20m		140B	1.2	40			20m		720			Si*	S123⊘
81#	S9DR25	720 †	40	120B	250	20m		140B	1.2	40			20m		720			Si*	S125⊘
82#	S9ER25	720 †	40	120B	250	20m		140B	1.2	40			20m		720			Si*	S124⊘
83#	S9BR30	720 †	44	125B	250	20m		140B	1.1	44			16m		900			Si*	S122⊘
84#	S9CR30	720 †	44	125B	250	20m		140B	1.1	44			16m		900			Si*	S123⊘
85#	S9DR30	720 †	44	125B	250	20m		140B	1.1	44			16m		900			Si*	S125⊘
86#	S9ER30	720 †	44	125B	250	20m		140B	1.1	44			16m		900			Si*	S124⊘
87	JAN1N3293,R	720	75	150C	1.6k	8.3m		200C	1 4	235	25C		20m	200C	600			Si	Z20
88#	S9AN70	720 †	77	115B	450	20m		150B	1.0	70			30m		900			Si	F19
89#	S9BR70	720 †	77	115B	450	20m		150B	1.0	70			40m		900			Si	F19
90	JAN1N3269,R	720	160	125	2.0k	8.3m		175C	1.4 †	500	25	80m	15m	150	600			Si	DO9⊘
91#	S9AN125	720 †	175	125B	1.1k	20m		150B	1.1	175			30m		900			Si	F19
92	JAN1N3170,R	720	175	150C	3 0k	8.3m		175C	1.4 †	750	25	50m	40m	175C	600			Si	DO9⊘
93#	S20N900JA	720	285	70C	4 5k	10m		150J	1.25	600	25A	5.0m	30m	150C	720			Si△	M378⊘
94	ED3007	750 △	50	50	20	8.3m	1 0	100A	1.5 △	1.0	25	10u	.03m	100	700			Si△	A1bk
95	ED3007A	750 △	.75	50	25	8.3m	1.0	100A	1.3 △	1.0	25	10u	.03m	100	700			Si△	A1bk
96#	BYY35	750	1.0	50A	50			150J	1.3	2.0	25J	5.0u			750			Si△	DO13
97	ED3007B	750 △	1.0	50	30	8.3m	1.0	100A	1.1 △	1.0	25	10u	.03m	100	700			Si△	A1bk
98	1N1128A	750	3.3	50B	25			175B	1.1	1.0	25B	10u	.20m	150B	750			Si	DO4
99	JAN1N1128A,RA	750	3.3	50C	25	8.3m		150C	2.2 †	10	25C	5.0u	.20m	150C	600			Si	DO4⊘
100	JAN1N1198A,RA	750	20	150C	350	8.3m		150C	1.3 †	60	25C	5.0m	1 5m	150C	600			Si	DO5⊘
101#	SJ603H	765	1.0	30A	32	10m		150J	1.0	750m	25A	10u	50u	120A	765			Si△	A31n
102#	168J2	800			3.0	1		150J	1.0	.40	25A					1.2k		Si	DO7
103	G5N3	800		150C	1.5k			175J	1 3	200	25C		5.0m	150C	800			Si	DO8
104	1N887	800	05	25A$	.50			200S	.60	.05			.02m		800			Si	A1bz
105	CER72A	800	.075	75A	48	4 0m		150A	1.2	.08	100	10u△	.20m	100	800			Si	DO27
106	1N876	800	.10	25A$	1.0			200S	.60	.10			.02m		800			Si	A1bz
107	10R8B	800	.10	25	60			175	2.0	.10	25	5.0u	.50m	150	800			Si	
108	PS2416	800	.10	25A$					2 0	5m	25A	10u			800			Si	C15
109	S208	800	100m	25$	15				1.2	150m	25	100u			800			Si	A54
110#	1S1225	800	.10	40A	6.0	10m		100J	1.5 △	.10	25A	5.0u		25J	800			Si△	

SYMBOLS AND CODES EXPLAINED IN INTERPRETER

5. RECTIFIERS

IN ORDER OF (1) PIV, (2) MAX AVG FWD CURRENT (3) TEMPERATURE, and (4) TYPE No.

LINE No.	4 TYPE No.	1 PIV (V)	MAX AVG FWD DC CURRENT 2 Io (A)	3 at TEMP (°C)	MAX RATINGS @ 25°C SURGE CUR. PEAK 1 Cy (A)	PULSE WIDTH (s)	DISS. (W)	MAX. TEMP (°C)	MAXIMUM FORWARD VOLTAGE DROP Vf (V)	at If (A)	at TEMP (°C)	MAX. REVERSE CURRENT Ir @25°C & Vr (A)	Ir at T & Vr (A)	TEMP T (°C)	TEST VOLT Vr (V)	AVALANCHE RATINGS MAX V BKDN. (V)	MIN SLOPE (A/V)	MAT.	DESCRIPTION DWG. No.
1	1N1407	800	.125	75A	6.0			150	5.0	1.2	25	10u	.10m	150A	800			Si	A53
2	1N865	800	15	25A$	1.5			200S	.60	.15			.02m		800			Si	A1bz
3	1N2501	800	.15	25A				150A	1.5	.10	25	20u	.20m	150	800			Si	A6
4▼#	1S2314	800	150m	25A	10			125J	3.0	200m	25A	10u			800			Si	
5	M72A	800	.15	50	50	8.3m		175	1.2		25	10u						Si	A3h
6#	SM150C	800	.15	50	32	20m	.15	120	1.0	.20	50	10u			800			Si	A138a
7	1N597	800	15	55A	4 0	1.0m		150A	3 0 △	17	25	25u△	.10m∅	75A	800			Si	A31x
8#	SH1B	800	.15	70A	15	10m		100S	1.0	.30	25A	10u	.20m	100A	800			Si△	A171
9	CER72B	800	.15	75A	48	4.0m		150A	1.2	15	100	10u△	.20m	100	800			Si	DO27
10	1N854	800	.20	25A$	2.0			200S	.60	.20			.02m		800			Si	A1bz
11	A1K1	800	.20	25	60			175A	.50		150	1.0u	50m	150	800			Si	A84a
12	A1K5	800	.20	25	60			175A	.50		150	5.0u	.50m	150	800			Si	A84a
13	A1K9	800	.20	25	60			175A	.50		150	10u	.50m	150	800	100	200u	Si	A84a
14	B1K1	800	.20	25	60			175A	.50		150	1.0u	.50m	150	800			Si	A1rx
15	B1K5	800	20	25	60			175A	.50		150	5.0u	.50m	150	800			Si	A1rx
16	B1K9	800	.20	25	60			175A	.50		150	10u	.50m	150	800	100	200u	Si	A1rx
17#	BYX10	800 $	.20	25	15	10m		125J	1.6	1.5	25	1.0u	.05m	125J	800			Si	A171c
18#	M82	800	.20	25A	3 0	10m	25	150A†	1.0	20 †	25		15m	125A	800			Si△	DO7
19	K1K5	800	.20	50	60			150C	2 0	.20	25	5.0u	.50m	100C	800			Si	
20	S234	800	250m	25$	15			65A	1.3	400m	25	200u			800			Si	A54
21	M72B	800	.25	50	50	8.3m		175	1 2		25	10u						Si	A3h
22	CER72C	800	.25	75A	48	4.0m		150A	1.2	25	100	10u△	.20m	100	800			Si	DO27
23	1N560	800	25	100A	1.0			140A	1.8	.25	25A	15u	.38m	125A	800			Si	DO3
24	1N1259	800	.27	25A	15			165A	1.0 ∅	.27	25A		.50m	125A	800			Si	A53
25	1N2505	800	.30	25A				150A	1 5	.20	25	20u	20m	150	800			Si	A6
26▼#	1S2311	800	300m	25A	30			125J	1 2	500m	25A	10u			800			Si	
27	S28	800	300m	25$	15				1.2	500m	25	500u			800			Si	A54
28#	BY157	800	.30	70	25	10m		125A	1 2	.30	25	1.0u	05m	25	800	1 6k		Si	DO29
29	1N5218	800 †	.375	40A	50 §			175A	1 2	1.0	75A		.20m	75A	800			Si	A31r
30#	1S117	800	.40	25A	8.0			150A	1.0	40	25A	.20u	.01m	100	800			Si△	A1
31#	M8HZ	800	40	25C	3 0	10m		150C†	1 0	.40 †	25	10u		125A	800		10u△	Si△	DO7
32	K2K5	800	.40	50	60			150C	2.0	40	25	5.0u	.50m	100C	800			Si	
33	1N562	800	40	100A	2 0			140A	1.8	.40	25A	15u	.38m	125A	800			Si	DO4
34#	MT84	800	.40	100A	2 0	1	50	200A	1 2	.40 †	25		.10m	150A	800			Si△	DO7
35	ER81	800	450m	25A$	15			150A	1 25	500m	25		75u	100	800			Si	A3t
36#	SG805	800	45	50A	10			150A	1.1	.50	25A	50u	.30m	150A	800			Si△	C42
37	SM83	800	450m	50$	25			175	1.5	800m	25	1.0u	500u	150	800			Si	A84
38#	DD.268	800	450m	60$	25				1.0	450m	25A		50u	100	800			Si	DO3
39	1N1108	800	.45	100	27	4.0m		150	3 0			2.0m			800			Si	F22a
40	A2K4	800	.475	25A	25			175A	1 5	50	25	1.0u△	.50m∅	150	800			Si	A84
41	1N3231	800	500m	25$	12				3 3	500m			500u	150	800			Si	A1cs
42	BR28†	800	500m	25	20	8.0m		150	1.1	500m	50	5.0u			880			Si△	M533
43#	D85C	800	.50	25A	30	10m	.55	150A	1 2	.50 †	25		.15m	125A	800			Si△	A100
44#	DA058	800	50	25	25	10m	60	100	1 0	1 0	25	1 0u			400	1.8k		Si△	A3k
45	MT080	800	50	25A	10		50	175A	1.0	.40	25A	.30u	.03m	150A	800			Si	A60e
46	MT080A	800	50	25A	10		.50	175A	1 0	.40	25A	.05u	01m	150A	800			Si	A60e
47	S20∅	800	.50	25	15			150A	1 2	80	25	10u			800			Si	A54
48	S63	800	500m	25$	15				1 2	800m	25	100u			800			Si	A54
49▼#	SR1FM16	800	500m	40A	50 §	8.3m		100J	1.2	3 0	25A		300u	100J	800			Si△	A1bv
50	.5E8	800	500m	50	50 §			175	1 1	500m	50	2 0u	50u	100	880			Si△	DO27
51	.5J8	800	500m	50	50 §			175	1 1	500m	50	2.0u	50u	100	880			Si△	DO15
52#	80AS	800	50	50A	15			100A	1 15	50	25A	10u			800			Si△	DO3
53	M72C	800	50	50	50	8.3m		175	1 2		25	10u						Si	A3h
54#	S05-08	800	500m	50	45	10m		125	1.0	500m	25	10u		25	800				A171a
55#	SE05C	800	50	50	48	20m	.55	120	1 1	50	50	10u			800			Si	M98a
56#	SW05C	800	50	50	48	20m	55	120	1 1	50	50	10u			800			Si	A221d
57	1N4250	800	50	55A	5 0			175A	1 7	.50	25	10u			800			Si	A1eh
58#	DD.058	800	500m	55C	25	10m	600m		1 0	1 0	25	1.0u△			400			Si	A3k
59#	SD1B	800	50	60A	45	10m		100S	1 0	1 5	25A	10u			800			Si△	A221b
60#	1S1233	800	50	70	35	10m		150	1.1	1 0	25	10u		25	800			Si	DO1
61	1N3196	800	50	75A				100A	1 2	50	25A	5.0u	20m	75A	800			Si	A50
62	1N3256	800	.50	75A				100A	1 2	50	25A	5.0u	20m	75A	800			Si△	A50a
63	1N3642	800	.50	75A	40			100	1.2	50	25	10u			800			Si	DO13
64	1N3751	800	50	75A	20	8 0m		150A	1.5	50	25A	5.0u			800			Si	A1cm
65▼	40809	800	500m	75A	35	8.3u	500m	175A	1.2	1 0	25J	5.0u	200u	150J	800	1.3k		Si	DO26
66	CER72D	800	50	75A	48	4.0m		150A	1.2	.50	100	10u△	.20m	100	800			Si	DO27
67	M72D	800	50	75A	11	1		150A	1.2	50	100	10u△	.20m∅	100	800			Si	A3j
68	1T508	800 †	50 ∅	85A	35			100A	1.2	30	25	10u	.25m	100	800			Si	A3x
69	2T508	800 †	.50 ∅	85A	35			100A	1.2	30	25	10u	.25m	100	800			Si	DO1
70	3T508	800 †	.50 ∅	85A	35			100A	1.2	30	25	10u	25m	100	800			Si	DO13
71	4T508	800 †	50 ∅	85A	35			100A	1 2	.30	25	10u	.25m	100	800			Si	DO7
72	ERD800	800 †	50 ∅	85	35			100A	1.2	30	25	10u	.25m	100	800			Si	M166
73#	1S557	800	50	100A	15			150A	1.1	50	25	50u			800			Si△	C42
74	S258	800	500m	100$	60				1 2	800m	25		500u	100	800			Si	A54
75	TKF80	800	50	100A	30	8.3m		175A	1.1	1 0	25A	10u	.50m∅	100A	800			Si	A84
76	BY100∅	800	.55	50A	5 0	10m		70A	1.5	5 0	25	10u			800			Si	A163
77	A2K1	800	.60	25	60			175A	50		150	1.0u	.50m	150	800			Si	A84a
78	A2K5	800	60	25	60			175A	.50		150	5.0u	50m	150	800			Si	A84a
79	A2K9	800	60	25	60			175A	.50		150	10u	.50m	150	800	100	200u	Si	A84a
80	B2K1	800	60	25	60			175A	.50		150	1.0u	.50m	150	800			Si	A1rx
81	B2K5	800	.60	25	60			175A	.50		150	5.0u	.50m	150	800			Si	A1rx
82	B2K9	800	60	25	60			175A	.50		150	10u	.50m	150	800	100	200u	Si	A1rx
83#	S10M2	800	60	25A	8.0		7 3	125				1.0u	.05m	125J	800			Si△	DO14
84#	5D8	800	.60	50A	40	10m		150S	1.2	3 0	25A		30m	100	800			Si	A1bp
85	K3K5	800	.60	50	60			150C	2.0	.60	25	5.0u	.50m	100C	800			Si	
86	SD98	800	60	50	11			125A	1.3	75	25							Si	A6a
87	SM280	800	600m	50$	20			150	1.2	950m	25	10u			800			Si	A84
88	TM86	800	.60	50C				175C	2.0	.40	25		.50m	150C	800			Si	A145
89#	P6RP8	800	600m	60$	20	8 3m		125	1 2 ∅	600m	60		200u∅	85	560			Si	A1fx
90#	1HY80	800	60 ∅	75A	40	10m		150S	1.15	60	25A							Si△	DO3
91	CY80	800	.60 ∅	75A	40	10m		150	1.15	60	75A				800			Si△	A31j
92	5MA8	800	.625	100	50			140J	.92	.63	25		.20m	100	800			Si	F29
93#	1S47	800	.65	50A	25			150J	1.2	1.0	25A	5 0u	.50m	150A	800			Si△	DO1
94#	BY156	800	65	60	60	10m		130A	1.2	65	25	10u	.10m	60	800	1.3k		Si	DO29
95	JAN1N560	800 †	75	25A	25	8.3m		175A	1.1 △	50	25A	5.0u	.50m	175A	800			Si	DO1
96	1N2773	800	75	25A$	15			165S	1.8	75	25A	4.0u	10m	150	800			Si	A145
97	1N3242	800	750m	25$	15				2 2	750m			500u	150	800			Si	A1cs
98	75R8B	800	.75	25	60			175	2 0	75	25	5 0u	50m	150	800			Si	
99	A3K1	800	.75	25	60			175A	.50		150	1 0u	.50m	150	800			Si	A84a
100	A3K5	800	.75	25	60			175A	.50		150	5.0u	.50m	150	800			Si	A84a
101	A3K9	800	.75	25	60			175A	.50		150	10u	50m	150	800	100	200u	Si	A84a
102	B3K1	800	.75	25	60			175A	.50		150	1.0u	.50m	150	800			Si	A1rx
103	B3K5	800	75	25	60			175A	.50		150	5.0u	.50m	150	800			Si	A1rx
104	B3K9	800	75	25	60			175A	.50		150	10u	.50m	150	800	100	200u	Si	A1rx
105	BR48†	800	750m	25	20	8.0m		150	1 1	750m	25	5.0u			880			Si△	M533
106	CODI538	800	750m	25$	25			150	1 1	800m	25	1 0u			800			Si	A52g
107	CODI618	800	750m	25$	25			150	1.1	800m	25	1.0u			800			Si	A9j
108	MB276	800	750m	25	15	8.3m	2 0	175A	1.2	500m∅	25	2.0u	75u	100	800			Si	A60f
109	TS8	800	.75	25A	25			125	1 2	75	25A	5.0u						Si	A1ev
110	UT119	800	750m	25A	15	8 3m	1 0		1 2	500m∅	25A	2.0u	75u	100A	800			Si	A146f

SYMBOLS AND CODES EXPLAINED IN INTERPRETER

5. RECTIFIERS

IN ORDER OF (1) PIV, (2) MAX AVG FWD CURRENT (3) TEMPERATURE, and (4) TYPE No.

LINE No.	4 TYPE No.	1 PIV (V)	MAX AVG FWD DC CURRENT 2 Io (A)	3 at TEMP (°C)	MAX RATINGS @ 25°C SURGE CUR. PEAK 1 Cy (A)	PULSE WIDTH (s)	DISS. (W)	MAX. TEMP (°C)	MAXIMUM FORWARD VOLTAGE DROP Vf (V)	at If (A)	at TEMP (°C)	MAX. REVERSE CURRENT Ir @25°C & Vr (A)	Ir at T & Vr (A)	TEMP T (°C)	AVALANCHE RATINGS TEST VOLT Vr (V)	MAX V BKDN. (V)	MIN SLOPE (A/V)	DESCRIPTION MAT.	DWG. No.
1#	ZS178	800	750m	25A	70 §			150A	1 2	750m	25A	5.0u	150u	100A	800			Si	A52f
2	1N5214	800 †	75	40A	50 §			175A	1 2	1 0	75A		20m	75A	800			Si	A31q
3	7E8	800	750m	50	60 §			175	1 1	750m	25	2 0u	50u	100	880			Si△	DO27
4	7J8	800	750m	50	60 §			175	1 1	750m	25	2 0u	50u	100	880			Si△	DO15
5	1N2616	800	75	50A	30			175A	1.1	.50	25A	10u	50m	150A	800			Si	A31a
6#	1S038	800	75	50A	40			150A	1.25		25A	2.0u			800			Si△	A89
7#	1S107⊠	800	75	50A	40			150A	1.0		150A	10u			800			Si△	A89
8#	8G7	800	75	50A	15			150A	1.1	75	25A	3 0u			800			Si△	DO3
9	A3K3	800 †	.75	50A	35			175A	1 1	50	25	10u△	.30m⊠	150	800			Si	A84
10	A800	800	.75	50	15		1.0	100	1 0	75	25	5.0u			800			Si	A3p
11	CER72F	800	75	50A	50	8.0m		175A	1.2	.75	25	10u			800			Si	F29
12	D800	800	.75	50	15		1.0	175	1.0	75	25	5.0u			800			Si	A50
13	DK758	800	750m	50A	60			175A	1 2	750m	25A	10u	100u	100	800			Si	DO27
14	H800	800	75	50	15		1 0	175	1.0	75	25	5 0u			800			Si	DO3
15	M72	800	75	50	50	8.3m		175	1 2		25	10u						Si	A3h
16#	P800A	800	75	50	50	10m		150	1 0	1.0	25	10u			800			Si	DO29
17#	S1C	800	75	50	48	20m	83	120	1 1	.75	50	10u			800			Si	A6a
18	SD98A	800	75	50	17			125A	1 2	.75	25							Si	A6a
19	SM80	800	750m	50$	35			175†	1 1	500m	25	10u			800			Si	A84
20#	SW1C	800	75	50	48	20m	83	120	1 1	.75	50				800			Si	
21	T800	800	75	50	15		1.0	100	1 0	.75	25	5 0u			800			Si	M21
22	1N3280	800	75	70A	25	8.0m		150A	1 2	75	25	5 0u			800			Si	A1cm
23#	BY100△	800	750m	75A	55 §	1.0m		130A	1 5	5 0	25A	10u			1 2k			Si	DO1
24	CER72	800	75	75A	48	4.0m		150A	1 2	75	100	10u△	.20m	100	800			Si	DO27
25	DI650	800	750m	75A	25			150A	1 2	1.2	25	200n	15u	100	800			Si	A1bn
26#	D8HZ	800	800m	25A	30	10m		150A	1 2	800m†	25	10u		125A	800	1.4k		Si△	A100
27#	D88	800	.80	25A	30	10m	1.0	150A	1 2	80 †	25		15m	125A	800			Si△	A100
28	EM408	800	80	25	50				1.1	.80	25	10u	.20m	85A	800				A1bg
29	PE408	800	80	35A$	50			135A	1 1	80	25	10u	.20m⊘	85A	800			Si	A3w
30#	1S1347	800	80	50A	40	8 3m		150J	1.2	3 0	25A	10u⊘	.50m⊘	150J	800			Si△	A89b
31	K4K5	800	.80	50	60			150C	2.0	80	25	5 0u	50m	100C	50			Si	
32#	SR1C16	800	800m	50A	40 §	8 3m		150J	1 2	3 0	25A	10u	500u	150J	800			Si△	A34d
33▼#	1S2307	800	800m	65A	60			150J	1 8	4.0	25A	10u			800			Si	A56a
34	A4K1	800	85	25	60			175A	50		150	1 0u	50m	150	800			Si	A84a
35	A4K5	800	85	25	60			175A	50		150	5 0u	.50m	150	800			Si	A84a
36	A4K9	800	.85	25	60			175A	.50		150	10u	.50m	150	800	100	200u	Si	A84a
37	B4K1	800	85	25	60			175A	50		150	1 0u	.50m	150	800			Si	A1rx
38	B4K5	800	85	25	60			175A	50		150	5.0u	50m	150	800			Si	A1rx
39	B4K9	800	.85	25	60			175A	.50		150	10u	50m	150	800	100	200u	Si	A1rx
40	SM180	800	850m	50$	45			150	1 0	1.5	25	10u			800			Si	A84
41	SM780	800	.85	50	35			125A	1.0	.50	25	01u	20m	150	800			Si	A84
42	ST18	800	950m	55A	75	4.0m		100A	1 0			1.0m			800			Si	C23
43	NS1008	800	1 0		60	8 3m			1.2	1.0		10u			800				
44	1N1226A	800 †	1.0	25A	25			140A	1 5	1 0	25A	50u		25A	800			Si	DO1
45	1N2222	800	1.0	25$	20			150	600m	1.5	25		750u	150	800			Si△	DO4
46	1N2222A	800	1 0	25$	20			150	600m	1.0	25		350u	150	800			Si△	DO4
47	1N2223	800	1 0	25$	20			150	600m	1 5	25		750u	150	800			Si△	S35
48	1N2223A	800	1 0	25$	20			150	600m	1 0	25		350u	150	800			Si△	S35
49	1N3251	800	1 0	25$	20				1.1	1 0			500u	150	800			Si	A1cs
50	JAN1N4585	800 $	1 0	25A	50	8 3m		200A	1 2 †	3 0	25	1 0u	200u	150	800			Si	DO29
51	100R8B	800	1.0	25	60			175	2 0	1 0	25	5 0u	50m	150	800			Si	
52#	0707	800	1 0	25	30	10m		125J	1 1	1 0	25	5.0u			800			Si	A1bu
53	A5K1	800	1 0	25	60			175A	50		150	1.0u	50m	150	800			Si	A84a
54	A5K5	800	1 0	25	60			175A	50		150	5 0u	50m	150	800			Si	A84a
55	A5K9	800	1 0	25	60			175A	50		150	10u	.50m	150	800	100	200u	Si	A84a
56	B5K1	800	1 0	25	60			175A	.50		150	1 0u	.50m	150	800			Si	A1rx
57	B5K5	800	1 0	25	60			175A	.50		150	5.0u	50m	150	800			Si	A1rx
58	B5K9	800	1 0	25	60			175A	.50		150	10u	50m	150	800	100	200u	Si	A1rx
59	BR58†	800	1.00	25	25	8.0m		150	1 10	1.0	25	5.0u			880			Si△	M533
60	BR88B†	800	1.00	25	50	8 0m		150	1 10	1 0	25	5.0u			880			Si△	M535
61#	E8HZ	800	1 0	25A	30	10m			1 2	1 0	25A		200u	125A	800	1.4k		Si	A1em
62#	E81	800	1 0	25A	50	10m		150A	1 2	1 0 †	25A	1.0u	200u	125A	800			Si△	DO29
63	EM508	800	1 0	25	50				1 1	1 0	25	1.0u	10m	100A	800				A1bg
64#	MA218	800	1 0	25A	50	10m		125J	1 4	5.0	25	10u			800				
65	MB250	800	1 0	25	20	8 3m	2 0	175A	1.0	600m⊠	25	1.0u	75u	100	800			Si	A60f
66	NPC0800	800	1 0	25	25			150A	1 1	1.0	25	30u						Si	A3n
67	S1080	800	1 0	25A	35			175A	500m⊘	250m	150A		500m⊘	150A	800	1 1k		Si△	A1gf
68	SD8	800	1.0 ⊘	25A	50			100A	1 0	1 0	25A	5 0u			800			Si	A1ev
69	SLA18AB	800	1.0	25	60	8.3m		150A	1.0	1.0	25	1.0u	10m	100	800			Si	A69
70	SLA18C	800	1 0	25	60	8 3m		150A	1 1	1 0	25	5 0u	25m	100	800			Si	A69
71	UT361	800	1 0	25A	20	8 3m	4 0	200A	1 0	400m⊠	25A	2 0u	75u	100A	800			Si	A60
72#	DA2068	800	1.0	35	45	10m	1.3	100	1 0	1 0	25	1.0u	20u	100	400	1 8k		Si△	DO3
73#	DD2068	800	1 0	35A$	30			100A	1.0	1.0	25A		.02m	100A	800			Si△	DO3
74	PE508	800	1 0	35A$	60			135A	1.1	.80	25A		.25m⊘	100A	800			Si	A3w
75	1B8	800	1.0	50C$	11			150C	2 0	1 0	25	2.0u	.05m	100	800			Si	M79
76	1C8⊠	800	1 0	50C$	11			150C	2.0	1 0	25	2.0u	05m	100	800			Si	M116a
77	1N4585	800 †	1.0	50A$	50			175A	1 0	1.0	25	10u△	.25m	150A	800			Si	DO29
78#	1S848	800	1.0	50	50	10m			1 0	1.0	25A		65m	150J	800				A200
79#	1S1065	800	1 0	50A	60	10m	1 0	150A	1 0	1 5	25	10u	10m	125	800	1 2k		Si	A52j
80	10C8△	800 †	1 0	50A				175A	1.2 △	1 0	25A	10u						Si	A50
81	AA800	800	1.0	50	15		1 0	100	.90	1 0	25	5 0u			800			Si	A3p
82	BTB800	800	1 0	50	50	8 0m		150A	1 1	1 0	50	10						Si	DO27
83	BTM800	800	1 0	50	30	8 0m		150A	1 1	1.0	50	10						Si	A1ry
84	CJ8	800	1.0	50	50			150	1 1	1 0	50	5.0u	200u	100	880			Si△	DO15
85	CL8	800	1 0	50A	50			150A	1 1	1.0	50A	5 0u	200u	100A	880			Si△	DO27
86	CM8	800	1.0	50	50			150	1 1	1.0	50	5.0u	200u	100	880			Si△	DO27
87	E8	800	1 0	50	75 §			175	1 1	1 0	25	2 0u	50u	100	880			Si△	DO27
88	EM8	800	1 0	50	75 §			175	1 1	1.0	25	2.0u	50u	100	880			Si△	DO41
89♦#	F14H	800	1 0	50A	45			175J	1 0	1 0	25	50u	300u	100	800			Si	A249a
90	HA800	800	1.0	50	15		1 0	175	90	1.0	25	5 0u			800			Si	DO3
91	K5K5	800	1 0	50	60			150C	2.0	1 0	25	5 0u	.50m	100C	800			Si	
92#	M9257D	800	1.0	50A				150A	1 0	1.0	25A		.50m	150A	800			Si	
93▼#	PCP8†	800	1 0	50	50			125S	2 0	1 0	25	10	100u	150	800			Si	M584
94	TA800	800	1 0	50	15		1 0	100	90	1 0	25	5.0u			800			Si	M21
95♦	1N4248	800	1 0	55A	25	8.3m		160A	1 2	1.0	55A	1.0u	25u	125	800			Si	A1tc
96	CA102RA	800	1 0	55A$	60			150A	1.1	1 0	25		.30m	150	800			Si	A32
97	CC102RA	800	1 0	55A$	60			150A	1 1	1 0	25		.30m	150	800			Si	C8
98	CE508	800	1.0	55A$	50			150A	1.1	1 0	25		10m	100	800			Si	A1cs
99	CF102RA	800	1.0	55A$	60			150A	1 1	1 0	25		.30m	150	800			Si	F8
100	F8	800	1 0	55A	70				1 1	1.0	25A					880		Si	A3r
101	SC8	800	1 0	55$	50			175	1 2	1.0	25	1.0u	50u	125	800			Si	A1bs
102	SCA8	800	1 0	55$	50			175	1.2	1.0	25	1.0u	50m	125	800	1.2k		Si	A1bs
103	SCE8	800	1 0	55$	50			175S	1 0	1 0	25	1.0u	50u	125	800				A1sd
104	SEN180	800	1 0	55	50	8 3m		170A	1 0	1 0	25	5.0u	300u	150	800			Si△	DO15
105	SH4D8	800 ⊘	1 0	55A	45	8.3m		115	60 ⊘	.50	85		.40m⊘	85	560			Si	M215
106▼#	BY127△	800	1.0	58C	40	10m		150J	1.5	5 0	25J	10u			1 2k			Si	A171b
107#	BY127/800	800	1 0	60A	40	10		150J	1 5	5 0	25J	10u			1.2k			Si	DO27
108▼#	SB2B	800	1 0	60A	100	10m		150J	960m	1.5	25A	10u			800			Si	A268
109	1N5062	800 †	1 0	65A	50 §			165A	1 2	1.0	65A		.10m	65A	800			Si	A94g
110	1N3760	800	1.0	70A	30			150A	1 0	1.5	25	5 0u			800			Si	A1cm

SYMBOLS AND CODES EXPLAINED IN INTERPRETER

5. RECTIFIERS

IN ORDER OF (1) PIV, (2) MAX AVG FWD CURRENT (3) TEMPERATURE, and (4) TYPE No.

LINE No	4 TYPE No.	1 PIV (V)	MAX AVG FWD DC CURRENT 2 Io (A)	3 at TEMP (°C)	MAX RATINGS @ 25°C SURGE CUR. PEAK 1 Cy (A)	PULSE WIDTH (s)	DISS. (W)	MAX. TEMP (°C)	MAXIMUM FORWARD VOLTAGE DROP Vf (V)	at If (A)	at TEMP (°C)	MAX. REVERSE CURRENT Ir @25°C & Vr (A)	Ir at T & Vr (A)	TEMP T (°C)	TEST VOLT Vr (V)	AVALANCHE RATINGS MAX V BKDN. (V)	MIN SLOPE (A/V)	MAT.	DESCRIPTION DWG. No.
1	1D8	800	1 0	75C	35			150C	2 0	1 0	50C	2.0u	.05m	100C	800			Si	M116*
2♦	1N4006	800	1 0	75A	30	8.3m		175A	1 6	1 0	75A	10u	30uØ	75A	800			Si	DO41
3	5A8	800	1 0	75A	50	8.3m			95	1 0	25A	10u						Si	DO27
4	10D8	800	1 0	75A	50	8 3m			95	1.0	25A	10						Si	DO39
5	CB80	800	1 0	75A	50	8.0m		175A	1 1	1 0	25A	2.0u	05m	100	800			Si△	A1bg
6	CP102RA	800	1 0	75A	15			150A	1.2	1 0	25C		3.0mØ	125C	800			Si	C9
7	ER186	800	1.0	75A	30 §			175J	1 1	1 0	25A	10u	.50mØ	75A	800			Si	DO27
8	G100K	800 †	1 0	75A	50			150A	1 0	1 0	25A	10u	200mØ	100A	800			Si	A50b
9▼	GER4006	800	1 0	75	30			175	1.1	1.0	25	100u						Si	A249b
10▼	HEP159-RT	800	1 0	75†	30			175†										Si	DO41
11	J8	800	1.0	75A	50	8 0m	1 0	175A	1 0	1 0	25A	5.0u	50u	100A	800			Si	DO15
12	MR2266	800	1.0	75	30	8 3m		175J	1.1	1 0	25	10u	05m	100	800			Si△	A1ba
13	1F8	800	1.0	100	50		1 0	150C	1.3	2 0	25	2.0u	50u	100	880			Si△	F22
14	A5K2	800 †	1 0	100A	45			200A	1 0	75	25	1.0u△	.20mØ	150	800			Si	A84
15	MR800	800	1 0	100A	50	8 0m		150A	1 0	1 0	25A	2.0u	100u	100	800			Si	A1dk
16	R800	800	1 0	100	50 §	8 0u		150A	1 0	1 0 †	25	2 0u△	100u	100	800			Si	
17	SI800E	800	1 0	100A	50			150C	1.0	1 0	25A	5.0u			800			Si	DO27
18	SLA800LCD†	800	1 0	100					1 0	1 0		1.0u	100u	100	800			Si	M547
19	SM81	800	1 0	100$	45			200A	1 0	1.2	25	1 0u			800			Si	A84
20	SM518	800	1 0	100$	45			150†	1.0	1 0	25	10u			800			Si	A84
21	BY109	800	1 0	150C$	25			150C	.90	1.0	25C	4 0u	.50m	150C	800			Si	DO2
22	BY119	800	1 0	150C$	25			150C	.80	1 0	25C	1 0u	.10m	150C	800			Si	DO2
23	BY129	800	1 0	150C$	25			150C	1 0	1 0	25	10u	1 0m	150C	800			Si	DO2
24	E1N3	800	1 0	150	200			175	1 3	1 0	150	10u	1.0m	150	800			Si	DO4
25#	SD98S	800	1 1	40A	40	10m		170A	1 0	.60	25A	50u	100m	150A	100				DO3
26	1N4514	800	1.1	50A	50 §			175A	1.0	1 1	50A		.50m	175A	800			Si	A52c
27#	BY105△	800	1 1	50A	55 §	1 0m		160A	1.5	5.0	25A	10u	100u	75A	1.2k			Si△	DO1
28	HC72F	800	1 1	50A	50	8 0m		175A	1 2	1 1	25	10u			800			Si	F29
29	MH72	800	1 1	50	50	8 3m		175	1 2		25	10u						Si	A3h
30	HC72	800	1 1	75A	75	4 0m		150A	1 2	1 1	100	10u△	.20m	100	800			Si	DO27
31	A6K1	800	1 2	25	60			175A	50		150	1 0u	.50m	150	800			Si	A84a
32	A6K5	800	1 2	25	60			175A	50		150	5 0u	50m	150	800			Si	A84a
33	A6K9	800	1.2	25	60			175A	.50		150	10u	.50m	150	800	100	200u	Si	A84a
34	B6K1	800	1.2	25	60			175A	50		150	1.0u	.50m	150	800			Si	A1rx
35	B6K5	800	1.2	25	60			175A	50		150	5.0u	.50m	150	800			Si	A1rx
36	B6K9	800	1 2	25	60			175A	50		150	10u	.50m	150	800	100	200u	Si	A1rx
37	EC080	800	1.2	50A	75	8 0m		150A	1 2 △	1 2	25A	2.0u△	10mØ	100A	800			Si△	A3c
38	K6K5	800	1.2	50	60			150C	2 0	1 2	25	5.0u	.50m	100C	800			Si	
39#	1S1891	800	1.2	65A	60			175J	1.2	1 5	25A		400m	175J	800			Si	A56b
40	UT362	800	1.25	25A	20	8 3m	4 0	175A	1 0	500mØ	25A	2.0u	75u	100A	800			Si	A60
41	TM85	800	1.25	50C				175C	2 0	80	25		50m	150C	800			Si	A145
42#	F81	800	1.3	25A	70	10m		150A†	1 2	1 3 †	25		.20m	125A	800			Si△	DO13
43#	F81Z	800	1.3	25A	70	10m	1 3	150A†	1 2	1 3 †	25	10u		25A	800	1 4k	2 5u	Si△	DO13
44	RA132RA	800	1 3	55A$	60			150A	1 2	1.3	25		.30mØ	150	800			Si	A34
45#	SKE1/06	800 %	1 4	45A	50 §	70m	1 2	160	1.3	3.1 Ø	25		100uØ	130	400			Si	C42s
46#	BY172	800 $	1 4	50A	40	10m		150A	1.2	1.0	25	1.0u		25	800			Si△	DO27
47#	1AS027	800	1 5	25	125	10m		150A	1.25	5 0	25	1.0u	.05m	100	800	1 5k		Si	DO1
48	1N1915	800	1.5	25A	30		2 0	250				10u		25A	800			Si	DO13
49	1N2653	800	1.5	25A	15	8 3m		165A	2.6	1.5	25A	300u			800			Si	M125
50#	1S027	800	1 5	25A	125			150	1 25		250A		.05m	100C	800			Si△	A89
51	150R8B	800	1 5	25	60			175	2 0	1 5	25	5.0u	50m	150	800			Si	
52	A7K1	800	1.5	25	60			175A	50		150	1.0u	.50m	150	800			Si	A84a
53	A7K5	800	1.5	25	60			175A	50		150	5.0u	50m	150	800			Si	A84a
54	A7K9	800	1 5	25	60			175A	.50		150	10u	.50m	150	800	100	200u	Si	A84a
55	A121-8†	800	1 50	25	25	8 0m		150	1 10	1.0	25	5.0u			880			Si△	M531
56	A132-8†	800	1 50	25	50	8 0m		150	1 10	1 0	25	5 0u			850			Si△	M532
57	A168-8†	800	1 5	25	50	8 0m		125	1 1	1 0	25	5.0u			880			Si	M575
58	B7K1	800	1 5	25	60			175A	.50		150	1.0u	.50m	150	800			Si	A1rx
59	B7K5	800	1.5	25	60			175A	50		150	5.0u	.50m	150	800			Si	A1rx
60	B7K9	800	1 5	25	60			175A	.50		150	10u	50m	150	800	100	200u	Si	A1rx
61	BR88D†	800	1 50	25	50	8.0m		150	1.10	1 0	25	5 0u			880			Si△	M536
62	M1K1	800	1 5	25	250			175A	50		150	2.0u	5.0m	150	800			Si	A1ep
63	M1K5	800	1 5	25	250			175A	50		150	10u	5.0m	150	800			Si	A1ep
64	M1K9	800	1 5	25	250			175A	50		150	10u	5 0m	150	800	100	200u	Si	A1ep
65	MB242	800	1 5	25	25	8 3m	2 0	175A	1.0	800mØ	25	200n	15u	100	800			Si	A60f
66#	SA8M1	800	1 5	25A	47		2 0	150A	2.0	10	25J	10u	300u	150J	800	1 0kØ		Si△	DO27
67	SI8	800	1 5	25A	80			150C	1.0	1 5	25A	1 0u			800			Si	A1bc
68	UT258	800	1 5	25A	25	8 3m		175A	1 0	750mØ	25A	2 0u	75u	100A	800			Si	A60
69#	ZS278	800	1 5	25A	70 §			150A	1 2	1.5	25A	5 0u	150u	100A	800			Si	A52f
70#	BYX22-800	800	1 5	30A	55	8 3m		150A	2.4	15	25A				800			Si	A163
71	SCBR8	800	1 5	30C	20			150										Si	M45a*
72#	SL803M	800	1 5	30A	30	2 0m		125C	1.34	7 5	25A	5.0u	110u	100C	800			Si△	S33
73	1N5053	800 †	1.5	40A	50 §			170A	1 3	1.5	40A		50m	170A	800			Si	DO27
74#	1S924	800	1 5	40A	80	10m		150J	1 05 △	1.5	25A		20m	150J	800			Si△	A56
75#	S2A80	800	1 5	40A	80	10m		150J	1 05 △	1.5	25A		20m	25A	800			Si△	A56
76#	S10CN1	800	1.5	40A	45		1.7	150A				10u	.25m	150J	800			Si△	A31n
77#	S10M1	800	1.5	40A	47		2.0	170A				10u	30u	150	800			Si△	DO27
78#	1S1075	800	1.5	50A	60	10m	1.0	150A	1.0	1.5	25	10u	.10m	125	800	1.2k		Si	A52j
79	1.5E8	800	1.5	50A	75 §			175A	1.1	1.5	25A	2.0u	50u	100	880			Si△	DO27
80	1.5J8	800	1.5	50	75 §			175	1 1	1.5	25A	2 0u	50u	100	880			Si△	DO15
81	DRS108	800	1.5	50A	50 §	8.3m		125A	1 0	1 0	25A	10u	200u	125A	800			Si	A168c
82	K7K5	800	1.5	50	60			150C	2 0	1 5	25	5 0u	.50m	100	800			Si	
83#	SE1 5C	800	1.5	50	63	20m	1 6	120	1 1	1.5	50				800			Si	M99a
84	1N2398	800	1.5	55A	35			150A	1 2	1.5	25		30m	150A	800			Si△	A32
85	1N2407	800	1.5	55A	35			150A	1.2	1.5	25		30m	150A	800			Si△	C8
86	1N2416	800	1.5	55A	35			150A	1 2	1.5	25		30m	150A	800			Si△	C9
87	1N2425	800	1.5	55A	35			150A	1.2	1.5	25		.30m	150A	800			Si△	F8
88#	BYX45-800R	800	1.5	55A	40	10m	800 Ø	150J	1 45	5 0	25J		100u	125J	800	2.0k		Si	DO1
89▼#	SA2B	800	1.5	60A	100	10m		140J	930m	1 5	25A	10u			800			Si	A268
90	1N5398	800	1.5	70C	50 §			170C	1 4	1 5	70C		.30m	150	800			Si	DO15
91▼	CTN800	800	1.5	75	50			175A	1.0			10u			800			Si	M594*
92▼	CTP800	800	1 5	75	50			175A	1 0			10u			800			Si	M594a*
93▼	VB800	800	1.5	75	50			175A	1.0			10u			800			Si	M594b*
94#	1WS8	800	1.5	100C	25 §	10m		125J	1 5	5 0	100C		1.5m	125J	800			Si*	A19a
95	1N1236A	800	1 6	50$	30				1.2	1.0	25A	50u	500u	150	800			Si	S25a
96	1N1236B	800	1 6	50$	30				1 2	1.0	25A	10u	300u	150	800			Si	S25a
97	S1280	800	1.6	120C	35		1.5 ØØ	175J	1 0 Ø	1.0	25A		01mØ	100C	800	1 8k		Si△	DO13△
98	1N1226	800	1 6	135C	20			175J	1.5	2 5	25J	500u	1.5m	150J	800			Si	DO1
99	1N1236	800	1.6	135C	20			175J	1 5	2.5	25J	500u	1.5m	150J	800			Si	S25
100	1N1226B	800 †	1.6	140C	25			175$	1.58	1 1	25	300uØ	10m△	25	800			Si	DO1
101	MDA922-8†	800 †	1.8	55A	100			175J	1 1	750m	25J	20u			800			Si△	M535a
102#	10B8	800	1.8	125B	40	10m		175A	1 1	3.0	25A	50u	.50m	150A	800			Si△	DO1
103	NS2008	800	2.0		200	8 3m			1.2	2 0		25u			800				
104	1N3614	800 §	2 0	25A	20		4.0	200A	1.0	75	25A	10u	30m	150A	800			Si	A60
105	1N3941	800 †	2.0	25	30			165	1.5	2.0	25	200u	.50m	150	800	1.2k		Si	DO13
106	200R8B	800	2 0	25	60			175	2 0	2.0	25	5.0u	.50m	150	800			Si	
107	AB800	800	2 0	25	15		3 0	100	1.25	1.0	25	5.0u			800			Si	A3q
108	BR78A†	800	2 00	25	25	8.0m		150	1.20	1.0	25	5.0u			880			Si△	M534
109#	F82	800	2 0	25A	70	10m	3 0	150A†	1.2	2.0 †	25		.20m	125A	800			Si△	DO13
110#	F82Z	800	2.0	25A	70	10m	2.3	175A	1 2	2.0 †	25	10u		25A	800	1 4k	2.5u	Si△	DO13

SYMBOLS AND CODES EXPLAINED IN INTERPRETER

5. RECTIFIERS

IN ORDER OF (1) PIV, (2) MAX AVG FWD CURRENT (3) TEMPERATURE, and (4) TYPE No.

LINE No.	4 TYPE No.	1 PIV (V)	MAX AVG FWD DC CURRENT 2 Io (A)	3 at TEMP (°C)	MAX RATINGS @ 25°C SURGE CUR. PEAK 1 Cy (A)	PULSE WIDTH (s)	DISS. (W)	MAX. TEMP (°C)	MAXIMUM FORWARD VOLTAGE DROP Vf (V)	at If (A)	at TEMP (°C)	MAX. REVERSE CURRENT Ir @25°C & Vr (A)	Ir at T & Vr (A)	TEMP T (°C)	TEST VOLT Vr (V)	AVALANCHE RATINGS MAX V BKDN. (V)	MIN SLOPE (A/V)	DESCRIPTION MAT.	DWG. No.
1	GR23	800	2 0	25	20			125	1.3	.75	25	15u	.30m	100A	800			Si	A1ry
2	M2K1	800	2.0	25	250			175A	.50		150	2.0u	5.0m	150	800			Si	A1ep
3	M2K5	800	2.0	25	250			175A	.50		150	10u	5.0m	150	800			Si	A1ep
4	M2K9	800	2.0	25	250			175A	.50		150	10u	5.0m	150	800	100	200u	Si	A1ep
5	MB234	800	2.0	25	25	8.3m	2.0	175A	1 0	1.0 ∅	25	25n	5.0u	100	800			Si	A60f
6	SEN2A8†	800	2.0	25	30	8.3m		150A	1.2	1.0		10u	100u	100	200			Si	M79b
7	SEN280	800	2.0	25	150	8 3m		170A	1.2	2.0	50		25u	50	800			Si△	DO27
8	SLA28A	800	2 0	25	80	8.3m		150A	.95	2.0	25	1.0u	.10m	100	800			Si	A69
9	SLA28B	800	2.0	25	80	8.3m		150A	1.0	2.0	25	1.0u	.10m	100	800			Si	A69
10	SLA28C	800	2.0	25	80	8 3m		150A	1.0	2.0	25	5.0u	.25m	100	800			Si	A69
11	UT268	800	2.0	25A	30	8.3m		175A	1.0	900m∅	25A	2.0u	75u	100A	800			Si	A60
12	UT2080	800	2.0	25A	60			200A	1.0	2.0	25A	2.0u			800			Si	
13	1N5177	800	2.0	50A	200			175A	1.2 †	2.0	50A		25u	50A	800			Si	DO27
14	20A8	800	2.0	50	50			170A	1.3	2.0	50	10u	.25m	50	800			Si	DO27
15	B172-80	800	2.0	50	60			150C	2.0	2.0	25	5.0u	.50m	100	800			Si	
16	BFW800†	800	2.0	50A	50			100C	1.1	1.0	25A								M40a
17▼	FW800†	800	2.0	50A	50			125A	900m	1.0	25A	5.0u						Si	M40a
18	K8K5	800	2.0	50	60			150C	2.0	2.0	25	5.0u	.50m	100	800			Si	
19▼#	MCP8†	800	2.0	50	50			125S				10u	100u	125	800			Si	S349
20	PD80	800	2.0	50A	50			125A	.90	1.0	25A	5.0u						Si	M40a*
21	SI8A	800	2.0	50A	80			150C	1.0	3 0	25A	1.0u			800			Si	A1bc
22	2F8	800	2.0	75C	50			150C	1.3	2.0	25C	2.0u	50u	100C	880			Si△	F22
23	HB800	800	2.0	75A	200			175C	1.0	2.0	25A	5 0u			800			Si	A179b
24♦#	SiDA0 5N	800	2.0	85C	40 §	10m		150J	1.4	3.0	25J	2.0u		25J	800	1.4k		Si	A9a
25	FB800†	800	2.0	100	50 §	8 0m		150A	1.0	1 0	25	10u†						Si△	M79a
26#	1S1356	800	2.0	124C	40	8 3m		150J	1.2	3 0	25A	10u∅	.50m∅	150J	800			Si△	S48c
27#	SR2B16	800	2.0	124C	60			150J	1.2 †§	3.0	25C	10u	500u	150J	800				S157a
28	250R8B	800	2.5	25	250			175	2.0	2.5	25	10u	1.0m	150	800			Si	
29	M3K1	800	2.5	25	250			175A	.50		150	2.0u	5.0m	150	800			Si	A1ep
30	M3K5	800	2.5	25	250			175A	.50		150	10u	5.0m	150	800			Si	A1ep
31	M3K9	800	2 5	25	250			175A	50		150	10u	5.0m	150	800	100	200u	Si	A1ep
32#	DD3078	800	2.5	30A$	45			100A	1.0	2 5	25A		.05m	100A	800			Si△	S191
33#	SL803F	800	2.5	30A	30	2.0m		150C	1.05	7.5	25A	5.0u	110u	100C	800			Si△	DO1
34#	0248	800	2 5	45	100	10m		150J	1.5	7.8	25	5 0u			700			Si	S87e
35♦#	SKN2.5/08	800	2 5	45A	120 §	10m		190A	1.0 §	2.5	25J	50u			560			Si	S352b
36#	SJ803F	800 †	2.5	100A	30			150A	1.0	.75	25A	10u	.30m	150A	800			Si△	DO3
37#	BYX38/1200	800	2.5	125B	38 §	10m		150J	1.7	5 0	25J	10u	.20m	125J	800			Si△	DO4∅
38#	BYX38/1200R	800	2 5	125B	38 §	10		150J	1.7	5.0	25J	10u	200u	125J	800			Si△	DO4
39#	OA211	800 †	2.5	125B	40	8 3m		150J	1.5	5.0			120u	125J	800			Si	A6f
40	1N2532	800	2 5	150C$	50			150C	1.2	4 0	25C	4.0u	.50m	150C	800			Si△	DO10
41	1N2543	800	2.5	150C$	50			150C	1.0	4.0	25C	1.0u	.10m	150C	800			Si△	DO10
42	1N2554	800	2.5	150C$	50			150C	1.5	4 0	25C	10u	1.0m	150C	800			Si△	DO10
43	BAV209	800	2.5	150C$	50			150C	1.2	2.5	25C	4.0u	.50m	150C	800	960		Si	DO4
44	BAV219	800	2 5	150C$	50			150C	1.0	2.5	25C	1.0u	.10m	150C	800	960		Si	DO4
45	BAV229	800	2.5	150C$	50			150C	1.5	2.5	25C	10u	1.0m	150C	800	960		Si	DO4
46	BAV309	800	2 5	150C$	50			150C	1.2	2.5	25C	4.0u	.50m	150C	800	960		Si	S35
47	BAV319	800	2 5	150C$	50			150C	1.0	2.5	25C	1.0u	.10m	150C	800	960		Si	S35
48	BAV329	800	2.5	150C$	50			150C	1.5	2.5	25C	10u	1.0m	150C	800	960		Si	S35
49	BY209	800	2 5	150C$	50			150C	1.2	2 5	25C	4.0u	.50m	150C	800			Si△	DO4
50	BY219	800	2.5	150C$	50			150C	1.0	2 5	25C	1.0u	.10m	150C	800			Si△	DO4
51	BY229	800	2.5	150C$	50			150C	1 5	2 5	25C	10u	1.0m	150C	800			Si△	DO4
52	BY309	800	2 5	150C$	50			150C	1.2	2.5	25C	4 0u	.50m	150C	800			Si	S35
53	BY319	800	2 5	150C$	50			150C	1.0	2.5	25C	1.0u	10m	150C	800			Si	S35
54	BY329	800	2.5	150C$	50			150C	1.5	2.5	25C	10u	1.0m	150C	800			Si	S35
55	MA80	800	2 5	150B	30			190B	1.0 △	2 5	150B	15u△						Si△	DO4
56	TM84	800	2 7	150C				175C	2 0	2.0	25		.50m	150C	800			Si	A145
57	NS3008	800	3 0		300	8.3m			1 2	3.0		25u			800				
58	1N2717	800	3 0	25A	15	8 3m		165A	2 6	3.0	25A	300u			800			Si	M126a
59	1N2738	800	3.0	25A	15	8.3m		165A	2 6	3.0	25A	300u			800			Si	M126d
60	1N2763	800	3.0	25A	15	8.3m		165A	2 6	3.0	25A	300u			800			Si	M126d
61	1N3649	800	3 0	25	25			190S	1.1	3.0	25		.20m	150	800			Si△	DO4
62	3AF8	800	3.0	25A	150			150C	1.2	3.0	25A	300u			200			Si	A222
63	30R8	800	3 0	25	200	8.0m	3 0	25	1.0	3 0	25	10u	50u	100	800			Si	A1rz
64	300R8B	800	3 0	25	250			175	2.0	3.0	25	10u	1.0m	150	800			Si	
65	AC800	800	3 0	25A	50			150C	1.0	3.0	25A	5.0u			800			Si	A1ey
66	BR88A†	800	3.0	25	50	8.0m		150	1.2	1 5	25	5.0u			880			Si△	M534
67▼	HEPR0097-RT	800	3.0	25$	300			175†										Si	A179
68	M4K1	800	3.0	25	250			175A	.50		150	2.0u	5.0m	150	800			Si	A1ep
69	M4K5	800	3.0	25	250			175A	.50		150	10u	5.0m	150	800			Si	A1ep
70	M4K9	800	3.0	25	250			175A	.50		150	10u	5.0m	150	800	100	200u	Si	A1ep
71	UT3080	800	3.0	25A	80			200A	1 0	2.0	25A	2.0u			800			Si	A146m
72	3BR8†	800	3 00	30	20	8.0m		125C											M530
73	1N5002	800 †	3.0	40A	300 §			175A	1.0 †	3.0	75A		1.0m	175A	800			Si	M176a
74	1N4144	800	3 0	50A	300			175A	1.0	3.0	50A		.10m	50A	800			Si	A1en
75#	3LC12	800	3.0	50A	90			150J	1.2	3.0	25A		1.0	150J	800			Si	S19s
76	A138-8†	800	3 0	50	50	8 0m		150	1.1	3.0	25	5 0u			850			Si	M79c
77	CH302RA	800	3 0	50A	15			150A	1.2	1.0	25C		3.0m∅	125C	800			Si	S152a
78	CK302RA	800	3.0	50A	15			150A	1 2	1.0	25C		3.0m∅	125C	800			Si	S153
79	CS302RA	800	3 0	50A	15			150A	1.2	1.0	25C		3.0m∅	125C	800			Si	S152
80▼	HAB080	800	3.0	50	300	8.3m		150A	1.1	3.0	25	5.0u	150u	100	800			Si	A1ez
81	S3A8	800	3.0	50A	300			150C	1.0	3.0	25A	1.0u			800			Si	A1ez
82#	S8-08	800	3.0	50	200	10m		150	1.1	8.0	25	50u			800			Si	S19m
83	S800	800	3 0	50	25		10	175	1.0	1.0	25	5.0u				800		Si	DO4
84	SLA5202	800	3.0	55	300			175	1.0	3.0	25	5 0u	12m	100	800			SL	A31a
85	1N4724	800	3 0	75A	300			175A	1.0	3.0	75		1.0m	175	800			Si	A179a∅
86	HC800	800	3.0	75	300		3 0	175	1.0	1 0	25		1.0m	25	800			Si	A179
87	S58	800	3.0	80$	20				1.3	5.0	25	100u			800			Si	S48
88#	S8BR2	800 %	3.0	95B	53			130B	.55 ∅	1.5	25		2.0m	125	800			Si	S81
89	3E8	800	3.0	100	200	8 0m	3 0	175	1.2	3.0	100	10u	100u	50	880			Si△	A1ec
90#	FD83	800	3.0	100C	70	10m		150C	1.4	10	25C		300u	125C	800			Si△	DO13
91	HR800	800	3.0	100	300 §	8 0u		150A	1.0	3.0 †	25	5.0u△	250u	100	800			Si	A1sm
92	1N5407	800	3.0	105C	200 §			170C	1.2	3.0	105C		50m	150C	800			Si	A3q
93	SEN380	800	3.0	105C	200	8 3m		170A	1.2	3.0	25	5.0u	500u	150	800			Si△	DO27
94#	1S417	800	3.0	125S	33			150S	1 6	10	25S	5.0u	300u	150	800			Si	S61△
95#	1S438	800	3 0	125B				150	1 6		25	5.0u			800			Si△	A89
96	30S8	800	3.0	125	150 §			175J	1.0 †	3.0	25	5.0u	300u	125	800			Si	A1ed
97#	D8003	800	3.0	125C	35			125B	1 5	3.0	25		30m	125B	800			Si△	S4c
98	S417	800	3.0	125A				150A	1 6	10	25A	5.0u	.30m	150	800			Si△	S24c∅
99#	3F80	800	3.0	140B	40	10m		175A	1.0	1 0	25A	50u	.50m	150A	800			Si	DO4
100#	1S1629	800	3.0	150C	90	10m		175J	1.3	15	25J		720m	175J	800	1.3k		Si	S187a
101	3C80	800	3.0	150				190	1 1	6.0	25		.50m	150	800			Si	DO4△∅
102	E2N3	800	3.0	150	200			175	1.3	3.0	150	10u	1.0m	150	800			Si	DO4
103#	S10M3	800 %	3.0	150J	180			150J	1.2	3.0			500u		1.0k			Si△	A52d
104	350R8B	800	3 5	25	250			175	2.0	3.5	25	10u	1.0m	150	800			Si	
105	1N2687	800	3.6	25A	15	8.3m		165A	2.6	3.6	25A	300u			800			Si	M126c
106	1N2749	800	3 6	25A	15	8.3m		165A	2 6	3.6	25A	300u			800			Si	M126g
107	400R8B	800	4.0	25	250			175	2.0	4.0	25	10u	1.0m	150	800			Si	
108#	G8004	800	4.0	25A	100	10m	4 5	150A	1 2	4.0 †	25		3.0m	125C	800			Si△	DO4
109#	P8004	800	4.0	25A	100	10m	4 5	150A	1 2	4.0 †	25		3.0m	125C	800			Si△	S95a
110	UT4080	800	4.0	25A	100	8.3m		200A	1.0	3.0	25A	2.0u			800			Si	A146m

SYMBOLS AND CODES EXPLAINED IN INTERPRETER

5. RECTIFIERS

IN ORDER OF (1) PIV, (2) MAX AVG FWD CURRENT (3) TEMPERATURE, and (4) TYPE No.

LINE No.	4 TYPE No.	1 PIV (V)	MAX AVG FWD DC CURRENT 2 Io (A)	3 at TEMP (°C)	MAX RATINGS @ 25°C SURGE CUR. PEAK 1 Cy (A)	PULSE WIDTH (s)	DISS (W)	MAX. TEMP (°C)	MAXIMUM FORWARD VOLTAGE DROP Vf (V)	at If (A)	at TEMP (°C)	MAX. REVERSE CURRENT Ir @25°C & Vr (A)	Ir at T & Vr (A)	TEMP T (°C)	TEST VOLT Vr (V)	AVALANCHE RATINGS MAX V BKDN. (V)	MIN SLOPE (A/V)	MAT.	DESCRIPTION DWG. No.
1	4F8	800	4 0	75	300	8 0m	3 0	175B	1 3	4.0	25	100u	500u	100	880			Si△	F22
2	450R8B	800	4.5	25	250			175	2 0	4 5	25	10u	1 0m	150	800			Si	
3	MR80#	800	4.5	150B	70			185B	1 0	4.5	150B	20u△						Si△	DO4
4	1N2240	800	5.0	25$	20			150	600m	1 5	25		750u	150	800			Si△	DO4
5	1N2240A	800	5 0	25$	100			150	600m	5.0	25		350u	150	800			Si△	DO4
6	1N2241	800	5.0	25$	20			150	600m	1 5	25		750u	150	800			Si△	S35
7	1N2241A	800	5 0	25$	100			150	600m	5 0	25		350u	150	800			Si△	S35
8	500R8B	800	5.0	25	250			175	2 0	5.0	25	10u	1 0m	150	800			Si	
9#	G85HZ	800	5.0	25A	100	10m			1 2	5 0	25A		3.0m	125A	800	1.4k		Si	S19q
10	5BR8†	800	5.00	30	35	8 0m		125C											M530
11#	SKN5/08	800	5 0	45A	160	10m		190A	1.0	10	150								S352b
12▼#	5PM8†	800	5.0	50	125			150J	2.0	5 0			50u	150	800			Si	M585
13	S5A8	800	5 0	50A	300			150C	1 1	5 0	25A	1 0u			800			Si	A1ez
14#	S20-08	800	5 0	50	600	10m		150	1.1	60	25	50u		25	800			Si	S19p
15	1N4458	800 †	5 0	150B	150			175B	1.5	5.0	150B		.50m⊘	150B	800			Si	DO4
16	407S	800	5 0	150C	125	8 3m		175J	1 1	5 0	25C		2 0m⊘	175J	800			Si	DO4
17	E3N3	800	5 0	150	200			175	1 3	5 0	150	10u	1 0m	150	800			Si	DO4
18	F1N3	800	5 0	150C	200			175J	1.3	30	25C		1 0m	150C	800			Si	DO5
19▼	SL8#	800	5 0	150A	150			175C	1 1	5 0	25A	5 0u			800			Si	DO4⊘
20	550R8B	800	5.5	25	250			175	2 0	5 5	25	10u	1.0m	150	800			Si	
21	NS6008	800	6.0		300	8.3m			1 2	6 0		25u			800				
22	600R8B	800	6.0	25	250			175	2 0	6 0	25	10u	1.0m	150	800			Si	
23	BR98A†	800	6 0	25	150	8 0m		150	1.2	3 0	25	10u			850			Si△	M537
24#	DD4068	800	6 0	25	50	10m	7 2	100	1 1	6 0	25	5 0u			800			Si	S19
25#	G8006	800	6 0	25A	140	10m	8 0	150A	1.2	6 0 †	25		3.0m	125C	800			Si△	DO4
26#	P8006	800	6 0	25A	140	10m	8 0	150A	1.2	6 0 †	25		3.0m	125C	800			Si△	S95a
27	SLA800†	800	6 0	25				150A				1 0u	75u	100	800				M545
28#	6LC12	800	6 0	50A	200			150J	1 2	6 0	25A		1.3	150J	800			Si	S19s
29#	48R2	800	6 0	75A	75 §	10m		150C	1.2	6 0	25C		2.5m	150C	800			Si△	DO4⊘
30#	48R2S	800	6 0	75A	75 §	10m		150C	1 2	6 0	25C		1.0m	150C	800	900 ∅		Si△	DO4⊘
31#	6F80	800	6 0	100A	120 §	10m		190J	65	6 0	100B		2.5m	100B	800			Si△	DO4⊘
32	80H3	800	6 0	100A	150			175C	1.3	6 0	25A	300u			800			Si	S19⊘
33#	BYX39/800	800	6 0	125B	100	10m		175J	2 0	20	25J		150m	125	800	1 8k		Si	DO4⊘
34#	S6-803K	800	6 0	125C	130	10m		150J	1 5	32	25A	20u	500u	150C	800			Si△	DO4⊘
35#	S8AN6	800 %	6 0	125B	125		6 5	150J	470m∅	6 0 †			2.0m	125B				Si△	DO4⊘
36#	1S1626	800	6 0	140C	150	10m		175J	1 35	30	25J		1 4m	175J	800	1 3k		Si	S187a
37	1N2558	800	6 0	150C$	150			150C	1 2	10	25C	4 0u	50m	150C	800			Si△	DO10
38	1N2562	800	6 0	150C$	150			150C	1 0	10	25C	1 0u	10m	150C	800			Si△	DO10
39	1N2573	800	6 0	150C$	150			150C	1.5	10	25C	10u	1 0m	150C	800			Si△	DO10
40	1N3988	800	6 0	150C	50			150	1 5				.80m∅	150	800			Si△	DO4
41	6A800	800	6 0	150C	150			200J	1 4 †	6.0	25C		80m	150C	800			Si△	DO4
42	6C80	800	6.0	150				190	1 2	12	25		50m	150	800			Si	DO4△⊘
43	6F80A	800	6 0	150C	50			190A	55	6 0	150		1 4m	150	800			Si	S19j⊘
44	6F80B	800	6 0	150C	160			200A	55	6 0	150		1.2m	150	800			Si	S19j⊘
45	441S	800	6.0	150C$	150			150C	1 4				70m	150C	800			Si	DO4
46	446S	800	6.0	150C$	150			150C	1 4				70m	150C	800			Si	DO4
47	BAV409	800	6 0	150C$	150			150C	1 2	6 0	25C	4 0u	50m	150C	800	960		Si	S35
48	BAV419	800	6 0	150C$	150			150C	1 0	6.0	25C	1 0u	10m	150C	800	960		Si	S35
49	BAV429	800	6 0	150C$	150			150C	1 5	6 0	25C	10u	1 0m	150C	800	960		Si	S35
50	BAV709	800	6 0	150C$	150			150C	1 2	6 0	25C	4 0u	50m	150C	800	960		Si	DO4
51	BAV719	800	6.0	150C$	150			150C	1.0	6 0	25C	1 0u	.10m	150C	800	960		Si	DO4
52	BAV729	800	6.0	150C$	150			150C	1 5	6 0	25C	10u	1 0m	150C	800	960		Si	DO4
53	BY409	800	6 0	150C$	150			150C	1 2	6.0	25C	4 0u	50m	150C	800			Si	S35
54	BY419	800	6 0	150C$	150			150C	1.0	6 0	25C	1 0u	10m	150C	800			Si	S35
55	BY429	800	6 0	150C$	150			150C	1 5	6 0	25C	10u	1.0m	150C	800			Si	S35
56	BY709	800	6 0	150C$	150			150C	1 2	6 0	25C	4 0u	50m	150C	800			Si△	DO4
57	BY719	800	6.0	150C$	150			150C	1 0	6 0	25C	1.0u	.10m	150C	800			Si△	DO4
58	BY729	800	6.0	150C$	150			150C	1 5	6.0	25C	10u	1 0m	150C	800			Si△	DO4
59	E4N3	800	6 0	150	200			175	1 3	6 0	150	10u	1.0m	150	800			Si	DO4
60	KR602RA	800	6.0	150S$	75			175S	1.2	6.0	25		1 0m	150S	800			Si	DO10
61	KS602RA	800	6.0	150C$	75			175C	1 2 △	6 0	25		3.0m∅	150C	800			Si△	DO4
62	SL800X	800	6 0	150A	150			175C	1.2	6 0	25A	5 0u			800			Si	DO4⊘
63	1N2701	800	7.2	25A	15	8 3m		165A	2.6	7.2	25A	300u			800			Si	M126j
64	MS80⊘	800	7.5	150B	140			185B	1 0 △	7 5	150B	20u△						Si△	DO4
65#	1S929	800	8.0	40A	430	10m		150J	1.05 △	20	25A		1 0m	150J	800			Si△	S50
66▼#	8PT8$	800	8.0	40A	250	10m		150J	2.0	8 0			7 0m	150	800			Si	M588
67#	S5B80	800	8.0	40A	430	10m		150J	1 05 △	20	25A		1 0m	25A	800			Si△	S50
68#	S8-08F	800	8.0	50	200	10m		150	1 1	8.0	25	50u			800			Si	M389
69	PA80†	800	8.0	55	300	8 3m		150	1.0	2 0	25	10u	100u	100	800			Si	M542
70	E5N3	800	8.0	150	200			175	1 3	8.0	150	10u	1 0m	150	800			Si	DO4
71♦#	SiDA02N	800	9.4	85C	110 §	10m		135J	1.05	3.0	25J	5 0u		25J	800	1 4k		Si	A126b%
72	1N2260	800	10	25$	200			150	600m	10	25		5.0m	150	800			Si△	DO4
73	1N2260A	800	10	25C$	200			150	.60	10	25		.50m	150	800			Si△	DO4
74	1N2261	800	10	25$	200			150	600m	10	25		5 0m	150	800			Si△	S35
75	1N2261A	800	10	25C$	200			150	60	10	25		.50m	150	800			Si△	S35
76	BR108A†	800	10	25	200	8 0m		150	1.2	5 0	25	10u			850			Si△	M538
77#	G8HZ	800	10	25C	230	10m	18	150C	1 1	10 †	25		3.0m	125C	800	1 4k	25u△	Si△	DO4
78#	G8010	800	10	25A	230	10m	17	150A	1.1	10 †	25		3.0m	125C	800			Si△	DO4
79#	P8HZ	800	10	25C	230	10m	18	125C†	1 1	10 †	25		3.0u	125C	800	1.4k	25u△	Si△	S95a
80#	P8010	800	10	25A	230	10m	17	150A	1.1	10 †	25		3.0m	125C	800			Si△	S95a
81▼#	10PM8†	800	10	40A	250	10m		150J	2.0	10			7.0m	150	800			Si	M586
82#	68R2	800	10	75A	115 §	10m		150C	1 1	10	25C		1 0m	150C	800			Si△	DO4⊘
83#	68R2S	800	10	75A	115 §	10m		150C	1 1	10	25C		1.0m	150C	800	900 ∅		Si△	DO4⊘
84	1N4439	800 †	10	100C	100 §			160A	1 2	10	100		1.0m⊘	100	800			Si	M249
85#	1S427	800	10	100B	200			175S	1.5	30	25A		05m	100	800			Si△	S61△
86	S427	800	10	100A	20	10m		175A	1.5	30	25A		50u	100	800			Si△	S24c⊘
87#	1S544	800	10	120B	200			175	1.6	50	25J		1.4m	175J	800			Si△	S103
88#	SA8AN12	800	10	120B	210			150J	470m∅	10			2.0m		800			Si△	DO4⊘
89#	D8010	800	10	125B	130			125B	1.5	10	25		30m	125B	800			Si△	S4c
90#	S8AN12	800 %	10	125B	210			150J	500m∅	9 5	25B		2.0m	125B				Si△	DO4⊘
91	408S	800	10	145C	175	8.3m		175J	1.2	10	25C		2.0m⊘	175J	800			Si	DO4
92	40115	800	10	150C	140 §			175C	.60	10	150C	75u△	65m∅	150C	800			Si△	DO4
93	E6N3	800	10	150	200			175	1.3	10	150	10u	1.0m	150	800			Si	DO4
94	F2N3	800	10	150C	200			175J	1.3	30	25C		1 0m	150C	800			Si	DO5
95#	2WMT8	800	11	100C	220 §	10m		125J	1.5	40	100C		7 0m	125J	800			Si*	DO5
96▼	HEPR0137-RT	800	12	25$	300			190†										Si	DO4
97#	12LC11	800	12	50A	300			150J	1 2	12	25A		2.4	150J	800			Si	S19n
98	ST280	800	12	50A	260			125C	1.3	12	25A	300u			800			Si	DO4⊘
99#	8AN80	800	12	55A	210	10m		140B	65 ∅	13	25A		10m	120J	800			Si	S4q⊘#
100♦	A129N	800	12	64	150	8 3m		125	1.55	12	64		6.0m	125	800			Si	DO4
101#	12F80	800	12	100A	150 §	10m		190J	.65	12	100B		2 5m	100B	800			Si△	DO4⊘
102#	1S1577	800	12	120C	200			150J	1 2	12	25A		2 4m	150J	800			Si	S19n
103▼#	SR10A16	800	12	120C	200 §	8 3m		150J	1 52	35	25C		3.0m	150J	800			Si△	S19t
104#	SR10D16	800	12	120C	200	8.3m		150	1.3	20			3 0m∅	150J	800			Si	S19c
105#	BYX40-800	800 $	12	125B	200	10m		175	2 5	50	25		300u	125	800	2.0k		Si	DO4⊘
106	1N4509	800	12	135C	240		10	175C	1 4	12			2.0m	135C	800	1.0k		Si	DO1
107#	12CF11	800	12	138C	240	10m		175J	1 5	50	25J		2.0m	175J	800	1 3k	1 0k	Si	S4k
108#	12LF11	800	12	138C	240	10m		175J	1 5	50	25J		2.0	175J	800	1.3k	1 0k	Si	S4k
109	1N2584	800	12	150C$	250			150C	1.2	20	25C	8.0u	1.0m	150C	800			Si△	DO10
110	1N2595	800 ⊘	12	150C	250			150C	1.0	12		2.0u	20m	150C	800			Si△	DO10

SYMBOLS AND CODES EXPLAINED IN INTERPRETER

5. RECTIFIERS

IN ORDER OF (1) PIV, (2) MAX AVG FWD CURRENT (3) TEMPERATURE, and (4) TYPE No.

LINE No.	4 TYPE No.	1 PIV (V)	MAX AVG FWD DC CURRENT 2 Io (A)	3 at TEMP (°C)	MAX RATINGS @ 25°C SURGE CUR. PEAK 1 Cy (A)	PULSE WIDTH (s)	DISS. (W)	MAX. TEMP (°C)	MAXIMUM FORWARD VOLTAGE DROP Vf (V)	at If (A)	at TEMP (°C)	MAX. REVERSE CURRENT Ir @25°C & Vr (A)	Ir at T & Vr (A)	TEMP T (°C)	TEST VOLT Vr (V)	AVALANCHE RATINGS MAX V BKDN. (V)	MIN SLOPE (A/V)	MAT.	DESCRIPTION DWG. No.
1	1N2606	800	12	150C$	250			150C	1.5	20	25C	20u	2.0m	150C	800			Si△	DO10
2	1N3671	800	12	150C	200													Si△	DO4
3	1N3671A	800	12	150C$	240			200C	1.35				.90m∅	150C	800			Si	DO4⊠
4	JAN1N3671A	800 $	12	150C	240	8 3m		200C	1 35	38	25	50u	1 0m	150	800			Si	DO4⊠
5	1N4013	800	12	150C	200			175A	1 3	12	150A	10u	.50m	150A	800			Si	DO4
6	12A800	800	12	150C	240			200J	1.35 †	12	25C		.80m	150C	800			Si△	DO4
7	12C80	800	12	150				190	1.5	24	25C		1.0m	150	50			Si	DO4△⊠
8	12F80B	800	12	150C	250			200A	.55	12	150		1.0m	150	800			Si	A19j⊠
9	404S	800	12	150C$	240			150C	1 35				.90m∅	150C	800			Si	DO4
10	437S	800	12	150C$	240			150C	1 35				.90m∅	150C	800			Si	DO4
11	BAV509	800	12	150C$	250			150C	1 2	12	25C	8.0u	1.0m	150C	800	960		Si	S35
12	BAV519	800	12	150C$	250			150C	1.0	12	25C	2.0u	.20m	150C	800	960		Si	S35
13	BAV529	800	12	150C$	250			150C	1 5	12	25C	20u	2 0m	150C	800	960		Si	S35
14	BAV809	800	12	150C$	250			150C	1 2	12	25C	8 0u	1.0m	150C	800	960		Si	DO4
15	BAV819	800	12	150C$	250			150C	1 0	12	25C	2 0u	.20m	150C	800	960		Si	DO4
16	BAV829	800	12	150C$	250			150C	1 5	12	25C	20u	2 0m	150C	800	960		Si	DO4
17	BY509	800	12	150C$	250			150C	1 2	12	25C	8 0u	1 0m	150C	800			Si	S35
18	BY519	800	12	150C$	250			150C	1.0	12	25C	2.0u	.20m	150C	800			Si	S35
19	BY529	800	12	150C$	250			150C	1 5	12	25C	20u	2.0m	150C	800			Si	S35
20	BY809	800	12	150C$	250			150C	1 2	12	25C	8 0u	1 0m	150C	800			Si△	DO4
21	BY819	800	12	150C$	250			150C	1.0	12	25C	2 0u	.20m	150C	800			Si△	DO4
22	BY829	800	12	150C$	250			150C	1 5	12	25C	20u	2.0m	150C	800			Si	DO4
23	E7N3	800	12	150	200			175	1 3	12	150	10u	1.0m	150	800			Si	DO4
24	MR1128	800	12	150C	300 §			190J	1.0	12	25C	500u			800			Si△	DO4
25	SL800	800	12	150A	250			150C	1 3	12	25A	5 0u	1.0m	150A	800			Si	DO4⊠
26	TR1128	800	12	150C	300 §			190J	1 2	12	25C	50u	.40m∅	150C	800			Si	DO4
27	UR123RA	800	12	150S$	240			175S	1 2	12	25		3 0m	150S	800			Si	DO10
28	US123RA	800	12	150C$	240			175C	1 2 △	12	25A		3 0m∅	150C	800			Si△	DO4
29♦#	SKN12/08	800	12 5	125C	200 §	10m		180A	1 0 §	10	25J	150u			560			Si	S353⊠
30	MT80	800	14	150B	240			185B	1 0 △	14	150B	100u△						Si△	DO4
31▼#	15PT8$	800	15	40A	250	10m		150J	2 0	15			7.0m	150	800			Si	M589
32	15GS8	800	15	75C	150	8 3m		150J	1 5	32	25A	20u	500u	150C	800			Si△	DO4⊠
33#	5M80	800	15	79B	300	10m		130A	1 3 †	50	130J		5 0m		800			Si	S193a
34#	RN8015	800	15	100C	350	10m	25	125C	1.2	15 †	25		3 0m	125C	800			Si△	DO5
35#	S8AN15	800	15	120B	220			150J	490m∅	15			3 0m		800			Si△	S324⊠
36#	S8BN15	800	15	120B	220			150J	490m∅	15			3 0m		800			Si△	S320⊠
37	368S	800	15	125C	240	8.3m		180J	1 3	15	25C		2.0m⊠	130C	800			Si	DO4
38	409S	800	15	125C	250	8 3m		175J	1 3	15	25C		2 0m⊠	175J	800			Si	DO4
39	F3N3	800	15	150C	200			175J	1 3	30	25C		1.0m	150C	800			Si	DO5
40#	16F80	800	16	100B	350	10m	17	190	550m	16	100		1.2m	175	800			Si	DO4
41	1N3623	800	16	155B$	300			175B					75m	175B	800			Si△	DO4
42#	SK803K	800	17 5	85C	230	10m		150J	1 4	50	25A	20u	500u	150C	800			Si△	DO4⊠
43#	S8BR8	800 %	18	120B	188		18	140B	60 ∅	18	25		10m	125	800			Si	S122a
44	2080	800	19	25A	200		4 0 ∅	150A	600m∅	19	25A		10m∅	150C		1.1k		Si△	DO4△
45	1N2279	800	20	25	400			150	.60	20	25		1.0m	150	800			Si△	DO4
46#	28R2	800	20	25A	250 §	10m	25	150J	50	20	25J		1 0m	150J	800			Si	DO5⊠
47#	28R2S	800	20	25A	250 §	10m	25	150C	50	20	25C		1.0m	150C	800	900 ∅		Si	DO5⊠
48#	1S934	800	20	40A	1 1k	10m		150J	1.05 △	40	25A		2 5m	150J	800			Si△	S51
49▼#	20PM8†	800	20	40A	250	10m		150J	2 0	20			7.0m	150	800			Si	M587
50#	S8B80	800	20	40A	100	10m		150J	1 05 △	40	25A		2 5m	25A	800			Si△	S51
51#	S20-08F	800	20	50	600	10m		150	1 1	60	25	10u		25	800			Si	S19p
52#	BYX13/800	800	20	100C	600	10m	35	150J	2 0	100	25C		2 0m	125C	400			Si	S72c⊠
53#	1S546	800	20	120B	400			175	1 6	100	25J		4.0m	175J	800			Si△	S102
54#	S8AN20	800	20	120B	250			150J	480m∅	20			3 0m		800			Si△	S324⊠
55#	S8BN20	800	20	120B	250			150J	480m∅	20			3.0m		800			Si△	S320⊠
56#	BYX25/800	800	20	125B	360	10m		175J	1 8	50	25		800m	125J	800	1 3k		Si	Z19⊠
57♦#	SKN20/08	800	20	125C	270 §	10m		180A	1 0 §	4 5	25J	150u			560			Si	S171s⊠
58	F4N3	800	20	150C	600			175J	1 3	50	25C		2 0m	150C	800			Si	DO5
59#	3WM8	800	21	100C	220 §	10m		125J	1 4	60	100C		14m	125J	800			Si*	S8
60	1N3967	800	22	120C$	200		4 0 ∅	150A	600m∅	26	25A		1 0m∅	150C	800	1 1k		Si△	DO4△#
61#	25LC12	800	25	50A	600			150J	1 2	25	25A		6 0	150J	800			Si	S19n
62	PB80†	800	25	55	300	8.3m		150	1 0	3 0	25	10u	100u	100	800			Si	M542
63	PBU80†	800	25	55	300	8 3m		150	1 0	3.0	25	10u	100u	100	800			Si	M542a
64▼	S25A80	800	25	55	300	8 3		150	1 0	3 0	25	10u	100u	100	50			Si	M542
65▼	A139N	800	25	75	400	8 3m		125	1 85	25	75		6 0m	125	800			Si	DO5
66#	1S1843	800	25	110C	300			150J	1 2	25	25A		6.0	150J	800			Si	S19n
67#	1S1417	800	25	135C	500	10m		175J	1 38	100	25J		3.0m	175J	800	1 3k		Si	S4k
68	25C80	800	25	140				190J	1 0	25	25C		20m	25	700			Si	DO5△⊠
69	25F80	800	25	140				190J	1 0	25	25C		20m	25	800			Si	M56△⊠
70	F5N3	800	25	150C	600			175J	1.3	90	25C		2 0m	150C	800			Si	DO5
71	PBT80$	800	27 5	55	300	8 3m		150	1.0	3 0	25	10u	100u	100	800			Si	M543
72	3180	800	30	25A	200		4 0 ∅	150A	600m∅	34	25A		1 0m∅	150C	800	1 1k		Si△	DO5△#
73▼#	30PT8$	800	30	40A	250	10m		150J	2.0	30			7 0m	150	800			Si	M590
74	PBC80	800	30	55C	300			150C	1 0	3 0	25C	10u	100u	100C	800			Si	M447⊠
75	PZ140H	800 †	30	100C	400			175C	.70 ∅	2 0	25C		2.0m⊠	150C	800	1 2k		Si	DO21⊠
76#	3C8	800	30	110C	500	10m		150J	1 5	30	40A		3 0m	25	800			Si*	S181
77#	S8AN31	800	30	120B	347			150J	600m∅	30			4 0m		800			Si△	S325⊠
78#	S8BN31	800	30	120B	347			150J	600m∅	30			4 0m		800			Si△	S321⊠
79	G3N3	800	30	150C	1 5k			175J	1 3	200	25C		5 0m	150C	800			Si	DO8
80	3280	800	33	25A	600		7 0 ∅	150A	600m∅	45	25A		2.0m∅	150C	800	1.1k		Si△	DO5△#
81#	15AN80	800	34	20A	500	10m		140B	700m∅	25	25A		20m	120J	800			Si	S241a⊠#
82	1N2286	800	35	25$	400			150	600m∅	35	25		5 0m	150	800			Si△	DO5
83#	RN820	800	35	25C	250	10m	32	175C†	1 5	20	25		5 0m	150C	800			Si△	DO5
84#	R8HZ	800	35	50C	250	10m	35	175C†	1 5	20 †	25		3 0m	150C	800	1 4k	40u△	Si△	DO5
85#	DA778	800	35	80B	300	10m	46	125	1 3	100	25	15u	500u	125	400	1 8k		Si△	S143a
86#	DB778	800	35	80B	300	10m	46	125	1 3	100	25	15u	500u	125	400	1 8k		Si△	S143a
87#	R83HZ	800	35	100C	500	10m		150C	1 5	110	25C		5 0m	150C	800			Si△	DO5
88#	SR30B16	800	35	100C	600	8 3m		150	1 3	50			10m∅	150J	800			Si	S19d
89	1N4528	800	35	115C	500		20	175C	1 4	35			3.0m	115C	800	1 0k		Si	DO5
90	1N3766	800	35	140C$	400			190B	1 8				5 0m	140B	800			Si	DO5
91	1N3777	800 †	35	140C	500			190B	1 8	35	25		20m	190J	800			Si	DO5
92	35C80△	800	35	140	900			190J	1 1	50	25		20m	25	800			Si	DO5△⊠
93	35F80	800	35	140	900			190J	1.1	50	25		20m	25	50			Si	M56△⊠
94#	38R2	800	35	140C	500 §	10m		200J	1 3	35	25C		10m	150C	800			Si△	DO5⊠
95#	38R2S	800	35	140C	500 §	10m		200J	1 3	35	25C		10m	150C	800	900 ∅		Si△	DO5⊠
96#	RN835	800	35	140C	500	10m		175C	1 5	110	25C		20m	150C	800			Si△	DO5
97#	SUT801K	800	36	85C	600	10m		150J	1.6	90	25A	200u	3 0m	150C	800			Si△	DO5⊠
98#	BYX52-1200	800	40	25C	650			175J	1 8	150	25J		1 6m	125J	800			Si	DO5⊠
99#	1S939	800	40	40A	2.7k	10m		150J	1.05	100	25A		5 0m	150J	800			Si△	#
100	S12C80	800	40	40A	2 7k	10m		150J	1 05	100	25		5 0m	25A	800			Si△	#
101#	K8040	800	40	90C	800	10m	44	125C	1 2	40 †	25		4 0m	125C	800			Si△	S245
102#	6WM8	800	40	100C	650 §	10m		125J	1 4	110	100C		14m	125J	800			Si*	S8
103#	10M80	800	40	104B	800	10m		130A	1.2 †	120	130J		10m		800			Si	S4s
104▼#	4C8	800	40	110C	700	10m		150S	1 5	40	40A	3 0m	12m	150	800			Si*	S181
105#	S8AN40	800	40	120B	485			150J	500m∅	40			4 0m		800			Si△	S325⊠
106#	S8BN40	800	40	120B	485			150J	500m∅	40			4 0m		800			Si△	S321⊠
107#	S10BR25	800 †	40	120B	250	20m		140B	1 2	40			20m		800			Si*	S122⊠
108#	S10CR25	800 †	40	120B	250	20m		140B	1 2	40			20m		800			Si*	S123⊠
109#	S10DR25	800 †	40	120B	250	20m		140B	1 2	40			20m		800			Si*	S125⊠
110#	S10ER25	800 †	40	120B	250	20m		140B	1 2	40			20m		800			Si*	S124⊠

SYMBOLS AND CODES EXPLAINED IN INTERPRETER

5. RECTIFIERS

IN ORDER OF (1) PIV, (2) MAX AVG FWD CURRENT (3) TEMPERATURE, and (4) TYPE No.

LINE No.	TYPE No.	1 PIV (V)	MAX AVG FWD DC CURRENT 2 Io (A)	3 at TEMP (°C)	MAX RATINGS @ 25°C SURGE CUR. PEAK 1 Cy (A)	PULSE WIDTH (s)	DISS. (W)	MAX. TEMP (°C)	MAXIMUM FORWARD VOLTAGE DROP Vf (V)	at If (A)	at TEMP (°C)	MAX REVERSE CURRENT Ir @25°C & Vr (A)	Ir at T & Vr (A)	TEMP T (°C)	TEST VOLT Vr (V)	AVALANCHE RATINGS MAX V BKDN. (V)	MIN SLOPE (A/V)	DESCRIPTION MAT.	DWG No.
1#	BYX15	800	40	125B	800 §	10m		150J	90	1 0	25		2 0m	125	800			Si	S72b
2#	BYX16	800	40	125B	800 §	10m		150J	90	1 0	25		2.0m	125	800			Si	S72e
3	40HF80	800	40	140C	500 §	8.3m		180J	1 3	40 †	140C		7 0m∅	140C	800			Si△	S21e∅
4	G4N3	800	40	150C	1 5k			175J	1 3	200	25C		5 0m	150C	800			Si	DO8
5#	S10BR30	800 †	44	125B	250	20m		140B	1.1	44			16m		1.0k			Si*	S122∅
6#	S10CR30	800 †	44	125B	250	20m		140B	1 1	44			16m		1 0k			Si*	S123∅
7#	S10DR30	800 †	44	125B	250	20m		140B	1 1	44			16m		1 0k			Si*	S125∅
8#	S10ER30	800 †	44	125B	250	20m		140B	1 1	44			16m		1 0k			Si*	S124∅
9#	25AN80	800	45	20A	700	10m		140B	700m∅	40	25A		20m	120J	800			Si	S241a∅#
10	1N2457	800	45	60C	300			175B	1 1	20	25		5.0m∅	150B	800			Si△	DO5
11♦#	SKN45/08	800	45	125C	600 §	10m		180A	1.2 §	60	25J	300u			560			Si	S171t∅
12#	BYX56-800	800	47	115B	800	10m		175J	1.8	150	25J		1 6m	125J	800	2.0k		Si	DO5∅
13	SLEA8†	800	50		150	16m			1 0	3.0	25	5 0u	100u	100	800			Si	M546
14#	SJ803E,K	800 †	50	100C	30		3 0	150A	1.0	.75	25C	10u	.30m	150C	800			Si△	DO4∅
15#	SL803A,K	800 †	50	100C	150		10	150C	1.2	10	25C	50u	1.5m	150C	800			Si△	DO4∅
16	1N3971	800	50	120C$	600		7 0 ∅	150A	600m∅	60	25A		2 0m∅	150C	800	1 1k		Si△	DO5△#
17#	1S1614	800	50	130C	2 0k	10m		175J	1 35	200	25J		15m	175J	800	1.3k		Si	S168b
18	50C80	800	50	140	400	1	55	190J	1.1	50	25		20m	150	50			Si	DO5△∅
19	1N1689	800	50	150C	700	8 3m		165C	1 2	1 1	150C		25m	150C	800			Si	S8q
20	1164H	800	50	150	1 0k	8 3m		200J	1.2	40	25C		2.0m∅	175J	800	1 2k		Si	DO5
21#	S500-8	800	55	50A$	3 7k	20m		120A	1 2 △	500	50A	1 0m△			800			Si	M189
22#	S8AN55	800	55	125B	935			150J	500m∅	55			6.0m		800			Si△	∅
23#	S8BN55	800	55	125B	935			150J	500m∅	55			6.0m		800			Si△	S322∅
24#	S8GN55	800	55	125B	935			150J	500m∅	55			6.0m		800			Si△	S322∅
25	1N2469	800	60	60C	450			175B	1 1	30	25		5.0m∅	150B	800			Si△	DO5
26#	SB801K	800	60	85C	700	10m		150J	1 7	210	25A	200u	3 0m	150C	800			Si△	S168a∅
27#	SBT801K	800	60	85C	700	10m		150J	1.7	210	25A	200u	3 0m	150C	800			Si△	S168a∅
28#	K86HZ	800	60	110C	1 2k	10m	70	150C	1.2	60 †	25		5.0m	125C	800	1 4k	50u△	Si△	S245
29#	KS8060	800	60	110C	1 5k	10m	67	150C	1 2	60 †	25		5.0m	125C	800			Si△	S245
30#	25G80	800	60	112B	850 §	10m	60	190B	.55 ∅	25	25A							Si*	DO5∅
31#	20M80	800	60	126B	1 0k	10m		175A	1.5 †	180	175J		10m		800			Si	S4t
32	H5N3	800	60	150C	3 0k			175J	1 3	300	25C		10m	150C	800			Si	DO9
33#	45AR80	800	70	25A	1 1k	10m		140B	70 ∅	90	25A		25m	120J	800			Si	S8j#
34	402S	800	70	110C	1.0k	8 0m		200J	1 15	40	25C		1.4m	150C	800			Si	DO5
35	435S	800	70	110C	1 0k	8 0m		200J	1.15	40	25C		1 4m	150C	800			Si	DO5
36#	SR70C16	800	70	119C	1 5k§	8 3m		150J	1 6	220	25C		30m	150J	800			Si△	S333
37#	S8AN71	800	70	120B	1 2k			150J	470m∅	70			6.0m		800			Si△	∅
38#	S8BN71	800	70	120B	1 2k			150J	470m∅	70			6 0m		800			Si△	S323∅
39#	S8GN71	800	70	120B	1 2k			150J	470m∅	70			6 0m		800			Si△	S322∅
40	70H80	800	70	125C	1 2k§	8 3m		200J	1 3	70 †	125C		7m∅	125C	800			Si*	DO5∅
41	70H80A	800 †	70	125C	1 2k§	8 3m		200J	1 3	70	125C		7m∅	125C	800			Si△	DO5∅
42	J4N3	800	70	150C	4 0k			175J	1 2	300	25C		10m	150C	800			Si	DO9
43	J5N3	800	70	150C	4 0k			175J	1 2	300	25C		10m	150C	50			Si	DO9
44#	10WM8	800	75	100C	1 0k§	10m		125J	1 5	200	100C		20m	125J	800			Si*	M43a
45	75E80	800	75	150C	850	4 0m		190J	1 0	90	25C		40m	25C	800			Si	S83a△∅
46	75F80	800	75	150C	850	4 0m		190J	1.0	90	25C		40m	25C	800			Si	M56a△∅
47#	S10AN70	800 †	77	115B	450	20m		150B	1.0	70			30m		1 0k			Si	F19
48#	S10BR70	800 †	77	115B	450	20m		150B	1 0	70			40m		1.0k			Si	F19
49#	1S944	800	80	40A	5 4k	10m		150J	1 05	200	25A		10m	150J	800			Si△	M26#
50#	S16B80	800	80	40A	5 4k	10m		120J	1 05 △	200	25A		10m	25A	800			Si△	M26
51#	8C8	800 †	80	100J	1 2k		100	150J	1 3	80	100C		5 0m∅	25J	800			Si*	S110a
52#	70BN80	800	100	40A	1 8k	10m		140B	.70 ∅	130	25A		30m	120J	800			Si	S8k∅#
53	FS503RA	800	100	80C$	950			175C	1 1	50	25		10m	150C	700			Si	DO8
54#	10C8∅	800 †	100	100J	1 5k		120	150J	1 2	100	100C		5 0m∅	25J	800			Si*	S110a
55#	1S438R	800	100	105B	1 6k			175J	1.6	500	25J		9 0m	175J	800			Si△	S12f
56♦#	SKN100/08	800	100	125C	1 5k§	10m		180A	1 0 §	48	25J	500u			560			Si	S171v
57	1N3294	800	100	130C	1 6k	8 3m		200C	1 5	100	130C		13m	130B	800			Si	DO8
58	1N3294A	800	100	130C	2 3k			200C	1.25	100	130C		13m	130C	800			Si	DO8
59	1N3294R	800	100	130B	1 6k			200A	900m	100	200J		13	200J	800			Si	DO8
60	A70N	800	100	130B	1 6k	8 3m		200J	600m∅	100	130B		5 5m	130B	800			Si	DO8
61	A71N	800	100	130B	1 6k	8.3m		200J	600m∅	100	130B		5.5m	130B	800			Si	DO8
62	100E80	800	100	150C	2.0k	4 0m		190J	1 0	140	25C		40m	25C	800			Si	S83△∅
63	100F80	800	100	150C	2 0k	4 0m		190J	1 0	140	25C		40m	25C	800			Si	M56a△∅
64	150L80A	800 †	100	150C	3 0k§	8 3m		200J	1 2	150 †	150C		9m∅	150C	800			Si*	DO30∅
65#	AS8	800	100	150	4 0k	20m		150										Si	
66	1N3975	800	104	120C$	1 5k		12 ∅	150A	600m∅	120	25A		5.0m∅	150C	800	1 1k		Si△	DO8△#
67#	S200-08F	800	110	50	4 0k	10m		150	1 3	600	25	20m			800			Si	M189a
68#	S12P800E	800	110	75C	2 0k	10m		175J	1 35	300	25A	1.0m	15m	175C	800			Si△	F56m
69#	S10N800E3	800	125	100C			160	150	.97	125	100C	6.0m	20m	100C	800			Si	F56m
70#	S10N800E4	800	125	100C			160	150	1 03	125	100C	6.0m	20m	100C	800			Si	F56m
71#	S10N800E5	800	125	100C			160	150	1.08	125	100C	6.0m	20m	100C	800			Si	F56m
72#	125BN80	800	130	20A	3 0k	10m		140B	700m∅	180	25A		40m	120J	800			Si	S120a∅#
73♦#	SKN130/08	800	130	125C	2 0k§	10m		180A	1 0 §	60	25J	500u			560			Si	S171u∅
74#	BYX32/800	800 †	130	135C	1 6k			190J	1 7	500	190J		13m	175J	800			Si△	S203b∅
75	FS703RA	800	150	75C	1 2k			175C	1 1	70	150C		10m	150C	800			Si	DO8
76#	S11P800E	800	150	75C	2 2k	10m		175J	1.35	300	25A	1.0m	15m	175C	800			Si△	F56m
77#	SD803K	800	150	75C	2 2k	10m		175J	1 35	300	25A	1.0m	15m	175C	800			Si△	∅
78♦#	15C8	800	150	90C	2 0k	10m		150S	1 5	150	40A	6.0m	30m	150	800			Si	S12j
79	1N3091	800	150	100C	3 0k§			200C	1 2	150	150C		16m	150C	800			Si	DO30
80♦#	BYX23/800	800	150	100A	1 6k§	10m	30	190J	1 6	500	25J		18m	175J	800			Si△	S128
81	1N4593	800	150	110	3.0k			200A	1 4	150	110		17m	200	800			Si	DO8∅
82#	S8PN125	800 %	150	110B	3 3k			150J	1 1	150			30m		800			Si*	S319∅
83#	S8BR125	800 %	150	115B	3 3k			150J	1.1	150			40m		800			Si*	F19
84#	S8KN125	800 %	150	115B	3 3k			170J	1 1	150			30m		800			Si*	F80∅
85#	45M80	800	150	116B	3 0k	10m		175A	1 5 †	500	175J		20m		800			Si	S8m
86#	SU801A,K	800 †	150	120C	600		30	150C	1 2	30	25C	200u	2 0m	150C	800			Si△	S168a∅
87#	BYX14/800	800	150	125C	3 0k	10m	240	190J	1 8	750	175C		15m	175C	400			Si	M294∅
88#	S8LN125	800 %	150	125B	3.3k			150J	1 1	150			30m		800			Si*	M521∅
89	150K80A	800 †	150	150C	3 0k§	8.3m		200J	1 2	150 †	150C		9m∅	150C	800			Si*	DO8∅
90#	ST3	800	160	110C	3.8k	10m	190	150C	1 3	160 †	25		4 0m	125C	800			Si△	S245a
91	DRS168	800	160	115C	2 5k	8 3m	170	175J	1 45	160 †	115C	5.0m	10m	115C	800			Si△	S210a∅
92	S5180	800	160	120C	2 2k		3 0 ∅∅	175J	600m∅	160	25A		10m∅	150C	800	1.1k		Si△	DO9△
93	1N3271	800 †	160	125C	2 0k			190J	1 25	160	125C		12m	125C	800			Si	DO9∅
94	160E80	800	160	150C	5 0k	4 0m		190J	1.0	160	25C		40m	25C	800			Si	S83△∅
95	160F80	800	160	150C	5 0k	4 0m		190J	1.0	160	25C		40m	25C	800			Si	M56a△∅
96♦#	SKN170/08	800	170	125C	3 0k§	10m		180A	1 0 §	80	25J	700u			560			Si	S171w
97#	S10AN125	800 †	175	125B	1 1k	20m		150B	1 1	175			30m		1 0k			Si	F19
98	175E80	800	175	150C	5 0k	4.0m		190J	1 0	175	25C		40m	25C	800			Si	S83△∅
99	175F80	800	175	150C	5 0k	4.0m		190J	1 0	175	25C		40m	25C	800			Si	M56a△∅
100#	200BN80	800	180	20A	7.5k	10m		140B	700m∅	240	25A		40m	120J	800			Si	S120a∅#
101#	S13N800E	800	190	75C	2 5k	10m		175J	1.35	300	25A	1.0m	15m	175C	800			Si△	F56m
102#	S20P800JA	800	200	100C	4 0k	10m		175J	1.25	600	25A		30m	175C	800			Si△	
103	DRS208	800	200	110C	3 5k	8.3m	220	175J	1 40	200 †	110C	5.0m	10m	110C	800			Si△	S210a∅
104#	T23	800	200	110C	3 8k	10m	240	150C	1 3	200 †	25		4.0m	125C	800			Si△	S246
105#	S8BN200	800 %	200	120B	4 0k		250	150B	600m∅	190	25B		40m	125C	800			Si	F19a
106	411S	800	200	130	3.0k	8.3m		200J	1.5	125	130C		8.0m∅	130C	800			Si	DO8
107#	20C8△	800	220	100C$	3 3k	10m		150	1 2	220	25		5 0m	25	800			Si	S184
108#	SR200P16	800	240	75C	5 0k§	8 3m		150J	1 73	750	25C		30m	150J	800			Si△	S298∅
109♥#	1S2347	800	240	92C	5 0k§	8 3m		150J	1 2	400	25C		30m	150J	800			Si△	M568
110♦#	FD200B16	800	240	92C	5 0k§	8.3m		150J	1 2	400	25C		30m	150J	800			Si△	M568

SYMBOLS AND CODES EXPLAINED IN INTERPRETER

5. RECTIFIERS

IN ORDER OF (1) PIV, (2) MAX AVG FWD CURRENT (3) TEMPERATURE, and (4) TYPE No.

LINE No.	4 TYPE No.	1 PIV (V)	MAX AVG FWD DC CURRENT 2 Io (A)	3 at TEMP (°C)	MAX RATINGS @ 25°C SURGE CUR. PEAK 1 Cy (A)	PULSE WIDTH (s)	DISS. (W)	MAX. TEMP (°C)	MAXIMUM FORWARD VOLTAGE DROP Vf (V)	at If (A)	at TEMP (°C)	MAX. REVERSE CURRENT Ir @25°C & Vr (A)	Ir at T & Vr (A)	TEMP T (°C)	TEST VOLT Vr (V)	AVALANCHE RATINGS MAX V BKDN. (V)	MIN SLOPE (A/V)	MAT.	DESCRIPTION DWG. No.
1	1N3172	800	240	105C	3.0k	8.3m		175C	1.9	240	105C		16m	105C	800			Si	DO9
2	1N3172A	800 *	240	120C	3 0k			190J	1.25	240	25C		16m	125C	800			Si	S14e
3♦#	SKN240/08	800	240	125C	5.0k§	10m		180A	1.0 §	125	25J	1.0m			560			Si	S171w⧄
4	240E80	800	240	150C	7 5k	4.0m		190J	1 0	240	25C		50m	25C	800			Si	S83Δ⧄
5	240F80	800	240	150C	7.5k	4.0m		190J	1.0	240	25C		50m	25C	800			Si	M56aΔ⧄
6#	BYX27/800	800	250		4.0k	10m	80k	190J	1.8	1.2k	190J		32m	175J	800	1.3k		Si	M105
7	A96N	800	250	70C	3.3k	8.3m		125J	1.25	250	25		10m	70C	800			Si	S120b
8	A97N	800	250	70C	3 3k	8.3m		125J	1.25	250	25J		10m	70C	800			Si	S120b
9♦#	25C8	800	250	90C	4.0k	10m		150S	1.5	250	90C	8.0m	45m	150	400			Si	S184
10	1N2066	800	250	100C	4.5k§			200C	1.3 †	250	135C		16m	135	640			Si	DO9
11	DRS250	800	250	100C$	4.5k	8.3m		175J	.55	250	110	2.0m	10m	175J	800			SiΔ	S210a⧄
12#	1S738R	800	250	105B	4 5k			175J	1.45	1.0k	25J		40m	175J	800			SiΔ	S12g
13#	70M80	800	250	107B	4 0k	10m		175A	1.5 †	800	175J		20m		800			Si	S8n
14	DRS248	800	250	110C	4 5k	8.3m	280	175J	1.40	250 †	110C	5.0m	10m	110C	800			SiΔ	S210a⧄
15	1N3979	800	250	120C$	4.0k		25 Ø	150A	600mØ	250	25A		10mØ	150C	800	1.1k		SiΔ	M294⧄
16#	BYX33/800	800	250	120A	4.0k	10m		190J	1.8	1.2k	190J		32m	175J	800			SiΔ	M294⧄
17	1N3741	800	250	130C	4 5k	8.3m		200C	1 1 Δ	250	130C		9.0m	130B	800			Si	DO9⧄
18	A90N	800	250	130B	4.5k	8.3m		200J	400mØ	250	130B		9.0m	130B	800			Si	DO9
19	A91N	800	250	130B	4 5k	8.3m		200J	400mØ	250	130B		9.0m	130B	800			Si	DO9
20#	S21N800H	800	270	75C	3.4k	10m		175J	1.45	600	25A	30m	80m	175C	700			SiΔ	M199
21	1N4054	800	275	120C	5.0k			190J	1.35	275	120C		15m	120C	800			Si	DO9⧄
22	275E80	800	275	150C	7.5k	4.0m		190J	1 0	275	25C		50m	25C	800			Si	S83Δ⧄
23	275F80	800	275	150C	7.5k	4.0m		190J	1.0	275	25C		50m	25C	800			Si	M56aΔ⧄
24#	S20N1000JA	800	285	70C	4 5k	10m		150J	1.25	600	25A	5.0m	30m	150C	800			SiΔ	M378⧄
25#	S8EN270	800 %	290	125B	1 5k	20m		160B†	975	340			50m	125B	800			Si*	M307
26#	S8FN270	800 %	290	125B	1.5k	20m		160B†	.975	340			50m	125B	800			Si*	M357c
27#	S8GN270	800 %	290	125B	1.5k	20m		160B†	.975	340			50m	125B	800			Si*	M357a
28♦#	S8HN270	800 %	290	125B	7.2k	10m		160B†	975m	340			50m	125B	800			Si*	M366a
29#	40C8	800	300	100C	5.0k	10m		150J		400			10m	25J				Si*	M366
30#	S8EN301	800	300	100B	5.1k	10m	410	100B	650mØ	300	100B		35m	100B	800			Si	M307
31#	S8FN301	800	300	100B	5 1k	10m	410	100B	650mØ	300	100B		35m	100B	800			Si	M248
32#	S8GN301	800	300	100B	5.1k	10m	410	100B	650mØ	300	100B		35m	100B	800			Si	M248a
33#	S8HN301	800	300	100B	5.1k	10m	410	100B	650mØ	300	100B		35m	100B	800			Si	M370
34#	TA3008R	800	300	100C	6 0k	10m			1.4	1.0k			15m	150C	800				S316
35#	T33	800	300	105C	5.0k	10m	350	150C	1 3	300 †	25		4.0m	125C	800			SiΔ	S246
36▼#	YSD212P8K38	800	300	105B	6.6k	10m		185J	1.21	1.0k	150J		25m	185J	800			Si	S365
37	300U80A	800 †	300	120C	5 0k§	8.3m		200J	1.4	300 †	120C		9m⧄	120C	800			Si*	DO9⧄
38#	30C8	800	300	150	4 5k							810m	4 5	150	1.5				
39#	S8EN290	800 %	310	125B	1.6k	20m		160B†	.975	340			.50m	125B	800			Si*	M307
40#	S8FN290	800 %	310	125B	1 6k	20m		160B†	.975	340			50m	125B	800			Si*	M357c
41#	S8GN290	800 %	310	125B	1 6k	20m		160B†	.975	340			50m	125B	800			Si*	M357a
42♦#	S8HN290	800 %	310	125B	7 2k	10m		160B†	975m	340			50m	125B	800			Si*	M366a
43#	S30N900JA3	800	320	100C	4.8k	10m		175J	1.15	600	25A	2.0m	30m	175C	800			SiΔ	M378
44#	S30N900JA4	800	320	100C	4 8k	10m		175J	1 25	600	25A	2.0m	30m	175C	800			SiΔ	M378
45♦#	SKN320/08	800	320	125C	8 0k§	10m		180A	1.0 §	200	25J	1.5m			560			Si	S17x
46#	S8EN310	800 %	330	125B	1 7k	20m		160B†	.90	400			50m	125B	800			Si*	M307
47#	S8FN310	800 %	330	125B	1.7k	20m		160B†	90	400			50m	125B	800			Si*	M357c
48#	S8GN310	800 %	330	125B	1 7k	20m		160B†	.90	400			50m	125B	800			Si*	M357a
49#	S8HN310	800 %	330	125B	1.7k	20m		160B†	.90	400			50m	125B	800			Si*	M366a
50#	S8EN300	800 %	340	125B	2 0k	20m		160B	900m	340			50m	125	800			Si*	M307
51▼#	S8HN300	800 %	340	125B	7 2k	10m		160B	900m	340			50m	125	800			Si*	M307
52#	300LD11	800	350	90B	6 5k	10m		150J	1.42	1k	25A		20m	150J	800			Si	S12b
53#	S8EN350	800 %	370	125B	2.0k	20m		160B†	.90	400			50m	125B	800			Si*	M307
54#	S8FN350	800 %	370	125B	2.0k	20m		160B†	.90	400			50m	125B	800			Si*	M357c
55#	S8GN350	800 %	370	125B	2.0k	20m		160B†	.90	400			50m	125B	800			Si*	M357a
56♦#	S8HN350	800 %	370	125B	7 8k	10m		160B†	900m	400			50m	125B	800			Si*	M366a
57	A396N	800	400	70C	3.3k	8 3m		125C	1.3 Ø	400	25		10m	70C	800			Si	M377a
58#	SR400C16	800	400	100C	10k§	8.3m		150J	1 40	1.2k	25C		30m	150J	800			SiΔ	S310
59#	300LD11A	800	400	132B	6 0k	10m		200J	1 42	1.0k	25A		30m	200J	800			Si	S12b
60	A390N	800	400	145	4 5k			200J	.40	400	130C		10m	130C	800			SiΔ	M377a
61	400E80	800	400	150C	12k	4.0m		190J	1.1	450	25C		75m	25C	800			Si	S83aΔ⧄
62	400F80	800	400	150C	12k	4.0m		190J	1.1	450	25C		75m	25C	800			Si	M56bΔ⧄
63▼#	YSD211P8K38	800	410	105B	6 6k	10m		185J	1.21	1 0k	150J		25m	185J	800			Si	S365
64	450E80	800	450	150C	12k	4.0m		190J	1.1	450	25C		75m	25C	800			Si	S83aΔ⧄
65	450F80	800	450	150C	12k	4.0m		190J	1 1	450	25C		75m	25C	800			Si	M56bΔ⧄
66	783S	800	485	130C	5 0k	8.3m		190J	1 9	400	130C		10m⧄	130C	800			Si	
67#	S8GR311	800	490	100B	7 5k			175J	670mØ	490			25m		800			SiΔ	M522
68#	S8HR311	800	490	100B	7 5k			175J	670mØ	490			25m		800			SiΔ	M523
69	501V80B	800	500	120C	10k§	8.3m		200J	1.2	500 †	120C		16mØ	120C	800			SiΔ	S120g⧄
70#	150MA80	800	500	129B	9 0k	10m		175A	1.5 †	1.5k	175J		50m		800			Si	S8p
71#	1S1334R	800	500	130B	9.0k			175J	1 4	1.5k	25J		30m	175J	800			SiΔ	S12h
72	500UDF80A	800 †	500	130C	9 0k§	8.3m		200J	1.35 †	500 †	130C		30m	130C	800			Si	M448$
73	A295N	800	500	130C	7.0k	8 3m		200J					15mØ	130C				Si	S132a
74	A296N	800	500	130C	7.0k	8 3m		200J					15mØ	130C				Si	S247
75	501VR80B	800	500	135C	10k§	8 3m		200J	1.2	500 †	135C		16mØ	135C	800			SiΔ	S120g⧄
76▼#	1S2249	800	600	93C	10k§	8 3m		150J	1.85	1 9k	25C		30m	150J	800			SiΔ	M565
77#	FD500D16	800	600	93C	10k§	8.3m		150J	1.85	1 9k	25C		30m	150J	800			SiΔ	M565
78	784S	800	650	150C	8 0k	8.3m		190J	1.3	500	150C		10m⧄		800			Si	
79#	S8BR502	800	750	100B	11k	10m	900	165J	625mØ	700			20m	100B	300			SiΔ	M429
80#	V2059N	800	800	103C	12k	20m		150J	1.6	2.5k	25	10m	25m	150J	800				M484
81#	FD1000A16	800	800	106C	14k			150J	1.5 †	2.5k	25C		30m	150J	800			SiΔ	M509
82♦	801PD80B	800 †	800	135C	10k§	8.3m		200J	1 4	800 †	135C		16mØ	135C	800			SiΔ	J200b
83	A540N	800	1 0k		10k			200J	1 08		150C		50m	200J	900			SiΔ	M463
84	A570N	800	1 5k	75C	15k	8.3m		200J	400mØ		130C		50m	200J	800			Si	M463
85#	0307	820 *	50	50A	30			150J	1.2 Δ	.50	25A	1 0u			700			Si*	A9hΔ
86#	0317	820 *	.50	50A	30			150J	1.2 Δ	50	25A	10u			700			Si*	A9hΔ
87#	0327	820 *	.50	50A	30			150J	1.2 Δ	.50	25A	.10u			700			Si*	A9hΔ
88	1N3107	840	50	75A	30			200A				50u			1.2k			SiΔ	A86
89	1N3109	840	.70	75C	30			200A				50u			1.2k			SiΔ	S82
90	1N364	850	100m	100$	10			150C	600mØ	200m	25C		250uØ	100A	850			Si	DO2
91	1N364A	850	15	100A$	10			150	60 Ø	20	25C	2.0u	06m	100A	850			Si	DO2
92	1N321	850	250m	100$	10			200	600m	400m	25C		300uØ	100A	850			Si	DO2
93	1N321A	850	250m	100$	10			200	600mØ	400m	25C	2.0uØ	60uØ	100A	850			Si	DO2
94#	1S211/2SJ8A	850	400m	25	1 5	1 0		150	1.2	500m	25A	20u			800			SiΔ	A164
95	1N328	850	400m	100$	10			150C	600mØ	650m	25C		300uØ	100A	850			Si	DO2
96	1N328A	850	400m	100$	10			150C	600mØ	650m	25C	2.0u	60uØ	100A	850			Si	DO2
97	ED3008	850 Δ	50	50	20	8 3m	1 0	100A	1.5 Δ	1.0	25	10u	.03m	100	800			SiΔ	A1bk
98	ED3008A	850 Δ	.75	50	25	8 3m	1.0	100A	1.3 Δ	1 0	25	10u	03m	100	800			SiΔ	A1bk
99	ED3008B	850 Δ	1 0	50	30	8.3m	1 0	100A	1.1 Δ	1 0	25	10u	.03m	100	800			SiΔ	A1bk
100#	S20N1100JA	880	285	70C	4 5k	10m		150J	1.25	600	25A	5.0m	30m	150C	880			SiΔ	M378⧄
101	1N888	900	05	25A$	50			200S	.60	05			.02m		900			Si	A1bz
102	1N877	900	10	25A$	1.0			200S	.60	.10			02m		900			Si	A1bz
103	10R9B	900	10	25	60			175	2.0	10	25	5.0u	.50m	150	900			Si	
104	1N866	900	.15	25A$	1 5			200S	.60	.15			.02m		900			Si	A1bz
105	1N855	900	20	25A$	2 0			200S	.60	20			.02m		900			Si	A1bz
106	1N1260	900	.25	25A	15			165A	1.0 Ø	25	25A		.50m	125A	900			Si	A53
107	1N548	900	300m	25$				150	1.1	300m	25		500u	150	900			Si	A189
108	MT090	900	.50	25A	10		50	175A	1 0	40	25A	.30u	.03m	150A	900			Si	A60e
109	MT090A	900	.50	25A	10		50	175A	1.0	.40	25A	05u	.01m	150A	900			Si	A60e
110	1T509	900 †	50 Ø	85A	35			100A	1 2	.30	25	10u	.25m	100	900			Si	A3x

SYMBOLS AND CODES EXPLAINED IN INTERPRETER

5. RECTIFIERS

IN ORDER OF (1) PIV, (2) MAX AVG FWD CURRENT (3) TEMPERATURE, and (4) TYPE No.

LINE No.	4 TYPE No.	1 PIV (V)	MAX AVG FWD DC CURRENT 2 Io (A)	3 at TEMP (°C)	MAX RATINGS @ 25°C SURGE CUR. PEAK 1 Cy (A)	PULSE WIDTH (s)	DISS. (W)	MAX. TEMP (°C)	MAXIMUM FORWARD VOLTAGE DROP Vf (V)	at If (A)	at TEMP (°C)	MAX. REVERSE CURRENT Ir @25°C & Vr (A)	Ir at T & Vr (A)	TEMP T (°C)	TEST VOLT Vr (V)	AVALANCHE RATINGS MAX V BKDN (V)	MIN SLOPE (A/V)	DESCRIPTION MAT.	DWG. No.
1	2T509	900 †	50 Ø	85A	35			100A	1.2	30	25	10u	25m	100	900			Si	DO1
2	3T509	900 †	.50 Ø	85A	35			100A	1.2	.30	25	10u	.25m	100	900			Si	DO13
3	4T509	900 †	50 Ø	85A	35			100A	1.2	.30	25	10u	.25m	100	900			Si	DO7
4	ERD900	900 †	.50 Ø	85	35			100A	1.2	.30	25	10u	.25m	100	900			Si	M166
5	1N4361	900 †	.50	100A	20			125	1 3	.50	100		.60m	125	900			Si	A3c
6	1N2774	900	75	25A$	15			165S	1.8	75	25A	4.0u	10m	150	900			Si	A145
7	75R9B	900	.75	25	60			175	2.0	.75	25	5 0u	50m	150	900			Si	
8	100R9B	900	1.0	25	60			175	2 0	1 0	25	5 0u	50m	150	900			Si	
9	S1090	900	1.0	25A	35			175A	.50 Ø	.25	150A		50mØ	150A	900	1.3k		SiΔ	A1gf
10#	BYY36	900	1 0	50A	50			150J	1 3	2 0	25J	5.0u			900			SiΔ	DO13
11▼#	AD29	900	1 0	60A	80	10m		140J	1.2	1.0	25A	10u			900			Si	A268
12	BY1001	900	1 0	150C$	25			150C	.90	1 0	25C	4.0u	.50m	150C	900			SiΔ	DO2
13	BY1101	900	1.0	150C$	25			150C	.80	1 0	25C	1 0u	10m	150C	900			SiΔ	DO2
14	BY1201	900	1.0	150C$	25			150C	1 0	1.0	25C	10u	1 0m	150C	900			SiΔ	DO2
15#	DS0.5A2	900	1.1	25J	60	10	97	150	1.4	3 3	25J	1 0m	2.0m	150	600			Si	Z3
16#	DS1.2A9	900	1.1	25J	60	10m	970m	150	1 40	3.3	25J	1 0m	2 0m	150	600			Si	
17#	SSiB0160	900	1.25	45A	50	10m		180J	1.1	2 5	25J	1 0u			900			SiΔ	A31v
18#	SSiC1560A	900	1.25	45A	75	10m		150J				1 0u			900	1.6k		SiΔ	A31v
19	1N1916	900	1.5	25	30		2.0	250				10u		25A	900			Si	DO13
20	150R9B	900	1 5	25	60			175	2 0	1 5	25	5 0u	.50m	150	900			Si	
21#	SSiC1660A	900	1.5	45A	75	10m		150J				1 0u			900	1 6k		SiΔ	A230
22#	SSiC0860	900	1.6	45A	100	10m		180J	1 0	3 0	20J	1 0u			900			SiΔ	A31v
23	S1290	900	1.6	120C	35		1 5 ØØ	175J	1.0 Ø	1.0	25A		01mØ	100C	900	1.8k		SiΔ	DO13Δ
24#	DS2B9	900	1.8	25J	120	10m	1 2	150	1 18	5 4	25J	1 0m	2.0m	150	600			Si	
25#	SSiC1160	900	1.9	45A	100	10m		180J	1 0	3.0	20J	1 0u			900			SiΔ	A230
26	200R9B	900	2 0	25	60			175	2 0	2 0	25	5.0u	.50m	150	900			Si	
27	B172-90	900	2 0	50	60			150C	2.0	2.0	25	5 0u	.50m	100	900			Si	
28#	SSiC1960A	900	2 3	45A	75	10m		150J				1.0u			900	1 6k		SiΔ	A231
29	250R9B	900	2.5	25	250			175	2 0	2 5	25	5.0u	.50m	150	900			Si	
30	1N2533	900	2 5	150C$	50			150C	1 2	4.0	25C	4.0u	50m	150C	900			SiΔ	DO10
31	1N2544	900	2.5	150C$	50			150C	1 0	4.0	25C	1 0u	.10m	150C	900			SiΔ	DO10
32	1N2555	900	2.5	150C$	50			150C	1 5	4 0	25C	10u	1.0m	150C	900			SiΔ	DO10
33	BY2001	900	2.5	150C$	50			150C	1 2	2 5	25C	4.0u	.50m	150C	900			SiΔ	DO4
34	BY2101	900	2.5	150C$	50			150C	1 0	2 5	25C	1 0u	.10m	150C	900			SiΔ	DO4
35	BY2201	900	2 5	150C$	50			150C	1.5	2.5	25C	10u	1.0m	150C	900			SiΔ	DO4
36	BY3001	900	2 5	150C$	50			150C	1 2	2.5	25C	4 0u	50m	150C	900			Si	S35
37	BY3101	900	2.5	150C$	50			150C	1 0	2.5	25C	1.0u	10m	150C	900			Si	S35
38	BY3201	900	2.5	150C$	50			150C	1.5	2 5	25C	10u	1.0m	150C	900			Si	S35
39	300R9B	900	3.0	25	250			175	2.0	3.0	25	5.0u	.50m	150	900			Si	
40#	SSiC1260	900	3 0	45A	100	10m		180J	1.0	3.0	20J	1 0u			900			SiΔ	A231
41	LR903	900	3 0	50A	200	8 3m		170A	1 0	3 0		10u	500u	150A	900			Si	A52d
42	S59	900	3.0	80$	20				1.3	5 0	25	100u			900			Si	S48
43#	S9BR2	900 %	3.0	95B	53	20m		130B	550mØ	1.5	25		2.0m	125	900			Si	S81
44	3C90	900	3.0	150				190	1.1	6 0	25		50m	150	900			Si	DO4ΔØ
45#	S12M3	900 %	3.0	150J	180			150J	1 2	3.0			500u		1.2k			SiΔ	A52d
46	350R9B	900	3.5	25	250			175	2.0	3.5	25	5.0u	50m	150	900			Si	
47	1N2689	900	3 6	25A	15	8 3m		165A	3.9	3.6	25A	800u			900			Si	M126e
48	400R9B	900	4.0	25	250			175	2 0	4.0	25	5.0u	.50m	150	900			Si	
49#	SSiC2060A	900	4.0	115C	75	10m		150J				1 0u			900	1.6k		SiΔ	S112bΔ
50#	SSiC1360	900	4 0	120C	100	10m		150J	1.0	3 0	20J	1.0u			900			SiΔ	S112bΔ
51	450R9B	900	4 5	25	250			175	2 0	4 5	25	5 0u	50m	150	900			Si	
52	500R9B	900	5 0	25	250			175	2 0	5 0	25	5.0u	.50m	150	900			Si	
53	407V	900	5.0	150C	125	8 3m		175J	1 1	5 0	25C		2 0mØ	175J	900			Si	DO4
54	550R9B	900	5.5	25	250			175	2 0	5 5	25	5.0u	50m	150	900			Si	
55	600R9B	900	6 0	25	250			175	2 0	6 0	25	5.0u	50m	150	900			Si	
56	SLA900†	900	6 0	25				150A				1.0u	75u	100	900				M545
57#	BYX48/900	900	6 0	125B	90 §			175J	1 8 †	15	25J		.20m	125J	600			SiΔ	DO4Ø
58#	S9AN6	900 %	6.0	125B	125		6 5	150J	470mØ	6 0 †			2 0m	125B				SiΔ	DO4Ø
59	1N2559	900	6 0	150C$	150			150C	1 2	10	25C	4.0u	50m	150C	900			SiΔ	DO10
60	1N2563	900	6 0	150C$	150			150C	1.0	10	25C	1.0u	10m	150C	900			SiΔ	DO10
61	1N2574	900	6 0	150C$	150			150C	1 5	10	25C	10u	1.0m	150C	900			SiΔ	DO10
62	1N3989	900	6 0	150C	50			150	1 5				.70mØ	150	900			SiΔ	DO4
63	6A900	900	6 0	150C	150			200J	1 4 †	6 0	25C		.70m	150C	900			SiΔ	DO4
64	6C90	900	6 0	150				190	1 2	12	25		.50m	150	900			Si	DO4ΔØ
65	6F90A	900	6.0	150C	50			190A	55	6 0	150		1.4m	150	900			Si	S19jØ
66	6F90B	900	6 0	150C	160			200A	55	6 0	150		1 2m	150	900			Si	S19jØ
67	441V	900	6 0	150C$	150			150C	1 4				.70m	150C	900			Si	DO4
68	446V	900	6 0	150C$	150			150C	1 4				70m	150C	900			Si	DO4
69	BY4001	900	6 0	150C$	150			150C	1 2	6 0	25C	4.0u	50m	150C	900			Si	S35
70	BY4101	900	6.0	150C$	150			150C	1.0	6 0	25C	1 0u	10m	150C	900			Si	S35
71	BY4201	900	6 0	150C$	150			150C	1 5	6 0	25C	10u	1 0m	150C	900			Si	S35
72	BY7001	900	6 0	150C$	150			150C	1 2	6 0	25C	4.0u	50m	150C	900			SiΔ	DO4
73	BY7101	900	6.0	150C$	150			150C	1 0	6.0	25C	1.0u	10m	150C	900			SiΔ	DO4
74	BY7201	900	6 0	150C$	150			150C	1 5	6.0	25C	10u	1.0m	150C	900			SiΔ	DO4
75#	SiD01K	900	7.0	90C	60	10m		140J	1.25	6 0	25	100u		25	600			Si	A31u
76#	SiD02K	900	9 5	90C	110	10m		140J	1 15	6.0	25J	100u		25J	600			Si	A31u
77#	0606	900	10	45	300	10m		150J	1 4	30	25	100u			500			Si	S87e
78#	SSiD0460	900	10	110C	125	10m		160J										SiΔ	S4pΔ
79#	SSiD0460A	900	10	110C	125	10m		160J								1 6k		SiΔ	S4pΔ
80#	BYX42/900	900	10	125B	125 §			175J	1 4 †	15	25J		20m	125J	600			SiΔ	DO4Ø
81#	S9AN12	900 %	10	125B	210			150J	500mØ	9 5	25B		2.0m	125B				SiΔ	DO4Ø
82	408V	900	10	145C	175	8 3m		175J	1.2	10	25C		2.0mØ	175J	900			Si	DO4
83#	SiD03K	900	12	85C	120	10m		140J	1.55	20	25J	500u		25J	600			Si	M346
84	1N2585	900	12	150C$	250			150C	1 2	20	25C	8.0u	1 0m	150C	900			SiΔ	DO10
85	1N2596	900 Ø	12	150C	250			150C	1.0	12		2 0u	2m	150C	900			SiΔ	DO10
86	1N2607	900	12	150C$	250			150C	1 5	20	25C	20u	2 0m	150C	900			SiΔ	DO10
87	1N3672	900	12	150C	200													SiΔ	DO4
88	1N3672A	900	12	150C$	240			200C	1 35				.90mØ	150C	900			Si	DO4Ø
89	1N4014	900	12	150C$	200			175A	1.3	12	150A	10u	.50m	150A	900			Si	DO4
90	12A900	900	12	150C	240			200J	1 35 †	12	25C		.70m	150C	900			SiΔ	DO4
91	12C90	900	12	150				190	1.5	24	25C		1 0m	150	50			Si	DO4ΔØ
92	404V	900	12	150C$	240			150C	1 35				.90mØ	150C	900			Si	DO4
93	437V	900	12	150C$	240			150C	1 35				.90mØ	150C	900			Si	DO4
94	BY5001	900	12	150C$	250			150C	1.2	12	25C	8.0u	1.0m	150C	900			Si	S35
95	BY5101	900	12	150C$	250			150C	1 0	12	25C	2 0u	.20m	150C	900			Si	S35
96	BY5201	900	12	150C$	250			150C	1.5	12	25C	20u	2.0m	150C	900			Si	S35
97	BY8001	900	12	150C$	250			150C	1.2	12	25C	8 0u	1.0m	150C	900			SiΔ	DO4
98	BY8101	900	12	150C$	250			150C	1 0	12	25C	2.0u	.20m	150C	900			SiΔ	DO4
99	BY8201	900	12	150C$	250			150C	1.5	12	25C	20u	2.0m	150C	900			SiΔ	
100#	S9AN15	900	15	120B	220			150J	490mØ	15			3.0m		900			SiΔ	S324Ø
101#	S9BN15	900	15	120B	220			150J	490mØ	15			3 0m		900			SiΔ	S320Ø
102	368V	900	15	125C	240	8 3m		180J	1.3	15	25C		2.0mØ	130C	900			Si	DO4
103	409V	900	15	125C	250	8 3m		175J	1.3	15	25C		2 0mØ	175J	900			Si	DO4
104#	S9BR8	900 %	18	120B	188		18	140B	.60 Ø	18	25		10m	125	900			Si	S122a
105#	S9AN20	900	20	120B	250			150J	480mØ	20			3.0m		900			SiΔ	S324Ø
106#	S9BN20	900	20	120B	250			150J	480mØ	20			3 0m		900			SiΔ	S320Ø
107	25C90	900	25	140				190J	1 0	25	25C		20m	25	700			Si	DO5ΔØ
108	25F90	900	25	140				190J	1 0	25	25C		20m	25	800			Si	M56ΔØ
109#	S9AN31	900	30	120B	347			150J	600mØ	30			4 0m		900			SiΔ	S325Ø
110#	S9BN31	900	30	120B	347			150J	600mØ	30			4.0m		900			SiΔ	S321Ø

SYMBOLS AND CODES EXPLAINED IN INTERPRETER

5. RECTIFIERS

IN ORDER OF (1) PIV, (2) MAX AVG FWD CURRENT (3) TEMPERATURE, and (4) TYPE No.

LINE No.	4 TYPE No.	1 PIV (V)	MAX AVG FWD DC CURRENT 2 Io (A)	3 at TEMP (°C)	MAX RATINGS @ 25°C SURGE CUR. PEAK 1 Cy (A)	PULSE WIDTH (s)	DISS. (W)	MAX. TEMP (°C)	MAXIMUM FORWARD VOLTAGE DROP Vf (V)	at If (A)	at TEMP (°C)	MAX. REVERSE CURRENT Ir @25°C & Vr (A)	Ir at T & Vr (A)	TEMP T (°C)	TEST VOLT Vr (V)	AVALANCHE RATINGS MAX V BKDN. (V)	MIN SLOPE (A/V)	MAT.	DESCRIPTION DWG. No.
1	1N3767	900	35	140C§	400			190B	1.8				5.0m	140B	900			Si	DO5
2	35C90△	900	35	140	900			190J	1.1	50	25		20m	25	900			Si	DO5△⧄
3	35F90	900	35	140	900			190J	1.1	50	25		20m	25	50			Si	M56△⧄
4#	S9AN40	900	40	120B	485			150J	500mØ	40			4.0m		900			Si△	S325⧄
5#	S9BN40	900	40	120B	485			150J	500mØ	40			4 0m		900			Si△	S321⧄
6	40HF90	900	40	140C	500 §	8.3m		180J	1.3	40 †	140C		7.0m⧄	140C	900			Si△	S21e⧄
7	50C90	900	50	140	400	1.0	55	190J	1.1	50	25		20m	150	50			Si	DO5△⧄
8	1N1690	900	50	150C	700	8.3m		165C	1.2	1.1	150C		25m	150C	900			Si	S8q
9#	S9AN55	900	55	125B	935			150J	500mØ	55			6.0m		900			Si△	⧄
10#	S9BN55	900	55	125B	935			150J	500mØ	55			6.0m		900			Si△	S322⧄
11#	S9GN55	900	55	125B	935			150J	500mØ	55			6.0m		900			Si△	S322⧄
12	402V	900	70	110C	1 0k	8.0m		200J	1.15	40	25C		1.2m	150C	900			Si	DO5
13	435V	900	70	110C	1.0k	8 0m		200J	1.15	40	25C		1.2m	150C	900			Si	DO5
14#	S9AN71	900	70	120B	1.2k			150J	470mØ	70			6.0m		900			Si△	⧄
15#	S9BN71	900	70	120B	1 2k			150J	470mØ	70			6.0m		900			Si△	S323⧄
16#	S9GN71	900	70	120B	1.2k			150J	470mØ	70			6 0m		900			Si△	S322⧄
17	70H90	900	70	125C	1.2k§	8.3m		200J	1.3	70 †	125C		7m⧄	125C	900			Si*	DO5⧄
18	70H90A	900 †	70	125C	1.2k§	8.3m		200J	1.3	70	125C		7m⧄	125C	900			Si△	DO5⧄
19	75E90	900	75	150C	850	4.0m		190J	1.0	90	25C		40m	25C	900			Si	S83a△⧄
20	75F90	900	75	150C	850	4.0m		190J	1 0	90	25C		40m	25C	900			Si	M56a△⧄
21	A70T	900	100	130B	1 6k	8.3m		200J	600mØ	100	130B		5.5m	130B	900			Si	DO8
22	A71T	900	100	130B	1.6k	8 3m		200J	600mØ	100	130B		5.5m	130B	900			Si	DO8
23	100E90	900	100	150C	2.0k	4.0m		190J	1 0	140	25C		40m	25C	900			Si	S83△⧄
24	100F90	900	100	150C	2.0k	4.0m		190J	1.0	140	25C		40m	25C	900			Si	M56a△⧄
25	150L90A	900 †	100	150C	3 0k§	8.3m		200J	1.2	150 †	150C		8m⧄	150C	900			Si*	DO30⧄
26#	S12P900E	900	110	75C	2.0k	10m		175J	1.35	300	25A	1 0m	15m	175C	900			Si△	F56m
27#	S10N900E3	900	125	100C			160	150	.97	125	100C	6.0m	20m	100C	900			Si	F56m
28#	S10N900E4	900	125	100C			160	150	1.03	125	100C	6.0m	20m	100C	900			Si	F56m
29#	S10N900E5	900	125	100C			160	150	1.08	125	100C	6.0m	20m	100C	900			Si	F56m
30	45L90	900	150	70A	3.0k§	10m		190J	.52 Ø	150 †			20m⧄		900			Si*	DO30⧄
31#	S11P900E	900	150	75C	2.2k	10m		175J	1.35	300	25A	1.0m	15m	175C	900			Si△	F56m
32#	SD903K	900	150	75C	2.2k	10m		175J	1.35	300	25A	1.0m	15m	175C	900			Si△	⧄
33#	S9PN125	900 %	150	110B	3 3k			150J	1.1	150			30m		900			Si*	S319⧄
34#	S9BR125	900 %	150	115B	3.3k			150J	1.1	150			40m		900			Si*	F19
35#	S9KN125	900 %	150	125B	3.3k			150J	1.1	150			30m		900			Si*	F80⧄
36#	S9LN125	900 %	150	125B	3.3k			150J	1.1	150			30m		900			Si*	M521⧄
37	150K90A	900 †	150	150C	3 0k§	8.3m		200J	1.2	150 †	150C		8m⧄	150C	900			Si*	DO8⧄
38	DRS169	900	160	115C	2 5k	8.3m	170	175J	1 45	160 †	115C	5.0m	10m	115C	900			Si△	S210a⧄
39	1N3272	900 †	160	125C	2.0k			190J	1.25	160	125C		12m	125C	900			Si	DO9⧄
40	160E90	900	160	150C	5.0k	4 0m		190J	1.0	160	25C		40m	25C	900			Si	S83△⧄
41	160F90	900	160	150C	5.0k	4.0m		190J	1.0	160	25C		40m	25C	900			Si	M56a△⧄
42	175E90	900	175	150C	5.0k	4 0m		190J	1.0	175	25C		40m	25C	900			Si	S83△⧄
43	175F90	900	175	150C	5.0k	4.0m		190J	1 0	175	25C		40m	25C	900			Si	M56a△⧄
44#	S13N900E	900	190	75C	2.5k	10m		175J	1.35	300	25A	1 0m	15m	175C	900			Si△	F56m
45#	S20P900JA	900	200	100C	4.0k	10m		175J	1.25	600	25A		30m	175C	900			Si△	
46	DRS209	900	200	110C	3.5k	8.3m	220	175J	1 40	200 †	110C	5.0m	10m	110C	900			Si△	S210a⧄
47#	S9BN200	900 %	200	120B	4 0k		250	150B	.60 Ø	190	25B		40m	125C	900			Si	F19a
48	1N3173	900	240	105C	3.0k	8.3m		175C	1.9	240	105C		16m	105C	900			Si	DO9
49	1N3173A	900 *	240	120C	3.0k			190J	1.25	240	25C		16m	125C	900			Si	S14e
50	240E90	900	240	150C	7 5k	4 0m		190J	1 0	240	25C		50m	25C	900			Si	S83△⧄
51	240F90	900	240	150C	7 5k	4.0m		190J	1.0	240	25C		50m	25C	900			Si	M56a△⧄
52	A96T	900	250	70C	3.3k	8.3m		125J	1.25	250	25		10m	70C	900			Si	S120b
53	A97T	900	250	70C	3 3k	8.3m		125J	1.25	250	25J		10m	70C	900			Si	S120b
54	1N2067	900	250	100	4 5k§			200C	1.3 †	250	135C		14m	135	720			Si	DO9
55	DRS249	900	250	110C	4 5k	8.3m	280	175J	1.40	250 †	110C	5 0m	10m	110C	900			Si△	S210a⧄
56	70U90A	900 †	250	130C	4 5k§	8 3m		200J	1 3	250 †	130C		8m⧄	130C	900			Si*	DO9⧄
57	A90T	900	250	130B	4.5k	8 3m		200J	400mØ	250	130B		8.0m	130B	900			Si	DO9
58	A91T	900	250	130B	4.5k	8 3m		200J	400mØ	250	130B		8.0m	130B	900			Si	DO9
59	1N4055	900	275	120C	5.0k			190J	1 35	275	120C		15m	120C	900			Si	DO9⧄
60	275E90	900	275	150C	7.5k	4.0m		190J	1.0	275	25C		50m	25C	900			Si	S83△⧄
61	275F90	900	275	150C	7 5k	4 0m		190J	1 0	275	25C		50m	25C	900			Si	M56a△⧄
62#	S9EN270	900 %	290	125B	1 5k	20m		160B†	.975	340			50m	125B	900			Si*	M307
63#	S9FN270	900 %	290	125B	1.5k	20m		160B†	975	340			50m	125B	900			Si*	M357c
64#	S9GN270	900 %	290	125B	1 5k	20m		160B†	.975	340			50m	125B	900			Si*	M357a
65♦#	S9HN270	900 %	290	125B	7 2k	10m		160B†	975m	340			50m	125B	900			Si*	M366a
66#	S9EN301	900	300	100B	5.1k	10m	410	100B	650mØ	300	100B		35m	100B	900			Si	M307
67#	S9FN301	900	300	100B	5 1k	10m	410	100B	650mØ	300	100B		35m	100B	900			Si	M248
68#	S9GN301	900	300	100B	5 1k	10m	410	100B	650mØ	300	100B		35m	100B	900			Si	M248a
69#	S9HN301	900	300	100B	5 1k	10m	410	100B	650mØ	300	100B		35m	100B	900			Si	M370
70	300U90A	900 †	300	120C	5 0k§	8.3m		200J	1 4	300 †	120C		8m⧄	120C	900			Si*	DO9⧄
71#	S9EN290	900 %	310	125B	1 6k	20m		160B†	.975	340			50m	125B	900			Si*	M307
72#	S9FN290	900 %	310	125B	1 6k	20m		160B†	.975	340			50m	125B	900			Si*	M357c
73#	S9GN290	900 %	310	125B	1 6k	20m		160B†	975	340			50m	125B	900			Si*	M357a
74♦#	S9HN290	900 %	310	125B	7 2k	10m		160B†	975m	340			50m	125B	900			Si*	M366a
75#	S30N1000JA3	900	320	100C	4 8k	10m		175J	1.15	600	25A	2.0m	30m	175C	900			Si△	M378
76#	S30N1000JA4	900	320	100C	4 8k	10m		175J	1.25	600	25A	2 0m	30m	175C	900			Si△	M378
77#	S9EN310	900 %	330	125B	1.7k	20m		160B†	.90	340			50m	125B	900			Si*	M307
78#	S9FN310	900 %	330	125B	1.7k	20m		160B†	.90	340			50m	125B	900			Si*	M357c
79#	S9GN310	900 %	330	125B	1.7k	20m		160B†	.90	340			50m	125B	900			Si*	M357a
80#	S9HN310	900 %	330	125B	1 7k	20m		160B†	.90	340			50m	125B	900			Si*	M366a
81#	S9EN300	900 %	340	125B	2.0k	20m		160B	900m	340			50m	125	900			Si*	M307
82♥#	S9HN300	900 %	340	125B	7 2k	10m		160B	900m	340			50m	125	900			Si*	M307
83#	S9EN350	900 %	370	125B	2.0k	20m		160B†	.90	340			50m	125B	900			Si*	M307
84#	S9FN350	900 %	370	125B	2 0k	20m		160B†	.90	340			50m	125B	900			Si*	M357c
85#	S9GN350	900 %	370	125B	2.0k	20m		160B†	90	340			50m	125B	900			Si*	M357a
86♦#	S9HN350	900 %	370	125B	7.8k	10m		160B†	900m	400			50m	125B	900			Si*	M366a
87	A396T	900	400	70C	3.3k	8 3m		125C	1.3 Ø	400	25		10m	70C	900			Si	M377a
88	A390T	900	400	145	4.5k			200J	.40	400	130C		10m	130C	900			Si△	M377a
89	400E90	900	400	150C	12k	4 0m		190J	1.1	450	25C		75m	25C	900			Si	S83a△⧄
90	400F90	900	400	150C	12k	4 0m		190J	1.1	450	25C		75m	25C	900			Si	M56b△⧄
91	450E90	900	450	150C	12k	4 0m		190J	1.1	450	25C		75m	25C	900			Si	S83a△⧄
92	450F90	900	450	150C	12k	4 0m		190J	1.1	450	25C		75m	25C	900			Si	M56b△⧄
93#	S9GR311	900	490	100B	7.5k			175J	670mØ	490			25m		900			Si△	M522
94#	S9HR311	900	490	100B	7 5k			175J	670mØ	490			25m		900			Si△	M523
95	CH1621	900	500	120C	8.5k	8 3m		180S	1 2	500	140C		15m	120C	900	1.1k		Si	F82⧄
96	500UDF90A	900 †	500	130C	9.0k§	8.3m		200J	1.35 †	500 †	130C		30m	130C	900			Si	M448$
97	A295T	900	500	130C	7 0k	8.3m		200J					15mØ	130C				Si	S132a
98	A296T	900	500	130C	7.0k	8.3m		200J					15mØ	130C				Si	S247
99#	S9K1003K5	900	640	85C	8.0k	10m		175J	1.35	1.2k	25A	2.0m	50m	175C	900			Si△	⧄
100#	S9K1003K45	900	660	85C	9 0k	10m		175J	1 3	1.2k	25A	2.0m	50m	175C	900			Si△	⧄
101#	S9K1003K4	900	680	85C	9 0k	10m		175J	1 25	1.2k	25A	2.0m	50m	175C	900			Si△	⧄
102#	S9K1003K35	900	720	85C	10k	10m		175J	1 2	1.2k	25A	2.0m	50m	175C	900			Si△	⧄
103#	S9K1003K3	900	750	85C	10k	10m		175J	1 15	1.2k	25A	2.0m	50m	175C	900			Si△	⧄
104#	S9BR502	900	750	100B	11k	10m	900	165J	625mØ	700			20m	100B	300			Si△	M429
105	A540T	900	1 0k		10k			200J	1 08		150C		50m	200J	1.0k			Si△	M463
106	A570T	900	1 5k	75C	15k	8 3m		200J	400mØ		130C		50m	200J	900			Si	M463
107	JAN1N3614	920	1.0	100A	30	8.3m		175A	1 1 †	1.0	25	1.0u	300u	150A	800			Si	A1rt
108#	S12DR30	920 †	44	125B	250	20m		140B	1.1	44			16m		1 2k			Si*	S125⧄
109#	S12ER30	920 †	44	125B	250	20m		140B	1 1	44			16m		1 2k			Si*	S124⧄
110	ED3009	950 △	.50	50	20	8.3m	1 0	100A	1.5 △	1.0	25	10u	.03m	100	900			Si△	A1bk

SYMBOLS AND CODES EXPLAINED IN INTERPRETER

5. RECTIFIERS

IN ORDER OF (1) PIV, (2) MAX AVG FWD CURRENT (3) TEMPERATURE, and (4) TYPE No.

LINE No	4 TYPE No.	1 PIV (V)	MAX AVG FWD DC CURRENT 2 Io (A)	3 at TEMP (°C)	MAX RATINGS @ 25°C SURGE CUR. PEAK 1 Cy (A)	PULSE WIDTH (s)	DISS. (W)	MAX TEMP (°C)	MAXIMUM FORWARD VOLTAGE DROP Vf (V)	at If (A)	at TEMP (°C)	MAX. REVERSE CURRENT Ir @25°C & Vr (A)	Ir at T & Vr (A)	TEMP T (°C)	TEST VOLT Vr (V)	AVALANCHE RATINGS MAX V BKDN. (V)	MIN SLOPE (A/V)	DESCRIPTION MAT	DWG No.
1	ED3009A	950 △	.75	50	25	8.3m	1 0	100A	1 3 △	1 0	25	10u	.03m	100	900			Si△	A1bk
2	ED3009B	950 △	1.0	50	30	8.3m	1 0	100A	1 1 △	1.0	25	10u	.03m	100	900			Si△	A1bk
3	JAN1N4458,R	960 *	10	25C	100	8.3m		150C	1 5 †	15	25	50u	.50m	150C	800			Si	DO4
4	JAN1N3766,R	960	35	150C	500	8.3m		150A	1.4 †	110	25	20u	3.0m	150C	800			Si	DO5
5#	S12BR25	960 †	40	120B	250	20m		140B	1 2	40			20m		960			Si*	S122∅
6#	S12CR25	960 †	40	120B	250	20m		140B	1.2	40			20m		960			Si*	S123∅
7#	S12DR25	960 †	40	120B	250	20m		140B	1 2	40			20m		960			Si*	S125∅
8#	S12ER25	960 †	40	120B	250	20m		140B	1 2	40			20m		960			Si*	S124∅
9#	S12BR30	960 †	44	125B	250	20m		140B	1.1	44			16m		1.2k			Si*	S122∅
10#	S12CR30	960 †	44	125B	250	20m		140B	1 1	44			16m		1.2k			Si*	S123∅
11	JAN1N3294,R	960	75	150C	1 6k	8 3m		200C	1 4	235	25C		15m	200C	800			Si	Z20
12#	S12AN70	960 †	77	115B	450	20m		150B	1 0	70			30m		1.2k			Si	F19
13#	S12BR70	960 †	77	115B	450	20m		150B	1 0	70			40m		1.2k			Si	F19
14	JAN1N3271,R	960	160	125	2 0k	8 3m		175C	1 4 †	500	25	80m	15m	150	800			Si	DO9∅
15#	S12AN125	960 †	175	125B	1 1k	20m		150B	1 1	175			30m		1.2k			Si	F19
16	JAN1N3172,R	960	175	150C	3 0k	8 3m		175C	1 4 †	750	25	50m	40m	175C	800			Si	DO9∅
17#	S20N1200JA	960	285	70C	4 5k	10m		150J	1.25	600	25A	5 0m	30m	150C	960			Si△	M378∅
18▼	5K10	1 0k	5 0m	25	1 0	8 0m		150A	4 0	5 0m	25	1 0u	10u	100	1 0k			Si	DO7
19	MC153	1.0k	01	25	1 0	8 0m			4 0	01	25	1 0u			1 0k			Si	A1db
20	MH400	1 0k	10m	25					1 2	10m	25	25n	10u	100	1 0k			Si	A1at
21	MC152	1 0k	.02	25	2 0	8 0m			2 0	02	25	1 0u			1 0k			Si	A1db
22▼	25K10	1 0k	25m	25	1 5	8 0m		150A	4 0	25m	25	1 0u	10u	100	1 0k			Si	DO7
23	SCM10	1 0k	25m	55A	5 0			150A	5 0	25m	25A	100n	2 0u	100A	1 0k			Si	A1ru
24	MC151	1 0k	04	25	3 0	8.0m			1 0	04	25	1 0u			1 0k			Si	A1db
25	1N889	1 0k	05	25A$	50			200S	.60	05			02m		1 0k			Si	A1bz
26▼	50K10	1 0k	50m	25	2 0	8 0m		150A	4 0	50m	25	1 0u	10u	100	1 0k			Si	DO7
27#	BA133	1 0k	05	25			10	125J	1 1	.10	25J	1.0u	05m	75J	1 0k			Si	A1bn
28	VA10	1 0k	50m	40A	3 0	8 3m		150A	4 0	50m	25	50n	5 0u	100	1 0k			Si△	A1m
29	1N1730A	1 0k	50m	175$	9 0	8 0m		200A	3 0	400m	25	1 0u	12u	150	1 0k			Si	A1gd
30	CER73A	1 0k	075	75A	48	4.0m		150A	1 2	08	100	10u△	20m	100	1 0k			Si	DO27
31	1N365	1 0k	100m	25$				150C	2 0	200m	25C		250u	100A	1 0k			Si	DO2
32	1N878	1 0k	10	25A$	1 0			200S	60	10			.02m		1 0k			Si	A1bz
33	1N3282	1 0k	10	25A	2 5			150A	2 5	10	25A	1 0u	01m	100A	1 0k			Si△	DO7
34	10R10B	1 0k	10	25	60			175	2 0	.10	25	5.0u	50m	150	900			Si	
35▼	100K10	1 0k	100m	25	2 5	8 0m		150A	3 0	100m	25	1 0u	10u	100	1 0k			Si	DO7
36#	HSC1	1 0k	.10	25A$				150A	2 0	10	25A	5.0u			1 0k			Si	
37	PS2417	1 0k	10	25A$					2 0	5m	25A	10u			1 0k			Si	C15
38	S210∅	1 0k	100m	25$	15				1 2	150m	25	100u			1 0k			Si	A54
39#	1S1225A	1.0k	.10	40A	6.0	10m		100J	1 5 △	10	25A	5 0u		25J	1 0k			Si△	
40	VB10	1.0k	100m	40A	3 0	8.3m		150A	5 0	100m	25	50n	5 0u	100	1 0k			Si△	A1fc
41	EZ100	1 0k	.10	50A	10			125A	9 0	10	25A	2 0u	100u	100A	1 0k			Si	A3c
42	1N2374	1 0k	.10	100A	12	8 3m		150A	3 0	10	100A		100m	100A	600			Si	A1fu
43	1N1408	1 0k	125	75A	6 0			150	5 0	1 2	25	10u	10m	150A	1.0k			Si	A53
44	1N867	1 0k	15	25A$	1 5			200S	.60	15			02m		1 0k			Si	A1bz
45	1N2502	1 0k	.15	25A				150A	1 5	10	25	20u	20m	150	1 0k			Si	A6
46▼#	1S2315	1 0k	150m	25A	10			125J	3 0	200m	25A	10u			1 0k			Si	
47#	M10HZ	1 0k	150m	25A	2 5	10m		125A	2 0	150m	25A	1.0u	25u	100A	1 0k			Si△	DO7
48	M73A	1 0k	.15	50	50	8 3m		175	1 2		25	10u						Si	A3h
49#	SM150D	1.0k	15	50	32	20m	15	120	1 0	20	50	10u			1 0k			Si	A138a
50	1N598	1 0k	15	55A	4.0	1 0m		150A	3.0 △	17	25	25u△	10m∅	75A	1 0k			Si	A31x
51#	SH1C	1 0k	15	70A	15	10m		100S	1 0	30	25A	10u	20m	100A	1 0k			Si△	A171
52	CER73B	1 0k	15	75A	48	4 0m		150A	1 2	15	100	10u△	20m	100	1 0k			Si	DO27
53	1N365A	1 0k	15	100A$	10			150	60 ∅	20	25C	2 0u	06m	100A	1 0k			Si	DO2
54	CP103	1 0k	15	100					2 0		25								M84af
55	1N856	1 0k	20	25A$	2 0			200S	.60	20			02m		1 0k			Si	A1bz
56	1N1730	1 0k	20	25A$	2 5	8 0m		150A	5 0			10u	.10m	100A	1 0k			Si	A1gd
57	A1M1	1 0k	.20	25	60			175A	.50		150	1 0u	.50m	150	1 0k			Si	A84a
58	A1M5	1 0k	.20	25	60			175A	.50		150	5 0u	50m	150	1 0k			Si	A84a
59	A1M9	1 0k	20	25	60			175A	.50		150	10u	.50m	150	1 0k	100	200u	Si	A84a
60	B1M1	1.0k	20	25	60			175A	50		150	1 0u	50m	150	1 0k			Si	A1rx
61	B1M5	1.0k	20	25	60			175A	50		150	5 0u	50m	150	1 0k			Si	A1rx
62	B1M9	1.0k	20	25	60			175A	50		150	10u	50m	150	1 0k	100	200u	Si	A1rx
63	HV10E1	1.0k	.20	25	1 0	8.0m	25	125A	1.0	10m	25	20n	3 0u	100	1 0k			Si	A83e
64	HV10P1	1.0k	200m	25	1 0	8 0m	250m	125A	1.0	10m	25	20n	3 0u	100	1 0k			Si	A94h
65#	M102	1.0k	20	25A	3 0	10m	25	150A†	1.0	20 †	25		15m	125A	1 0k			Si△	DO7
66	PS1140	1.0k†	20	25A$	2 5 §	8 0m		175A	5 0	.10	25A							Si	A1gd
67	SLA01	1 0k	20	25				150	5 0	1 0		6 0u	75u	100	1 0k			Si	A1dj
68	K1M5	1.0k	20	50	60			150C	2.0	20	25	5 0u	50m	100C	1 0k			Si	
69	SE1730	1.0k	20	50A	3 0 §	10m		150A	4.0	20	25	2 5u	40m	100	1.0k			Si	A1gg
70	1N2372	1 0k	.20	150C	12	8 3m		175C	2 0	30	150		50m	150C	1 0k			Si	DO4
71	1N1261	1.0k	24	25A	15			165A	1.0 ∅	24	25A		.50m	125A	1.0k			Si	A53
72♦	1N2880	1.0k	250m	25A				150S	2.0	250m	25A	500n			1 0k	1 4k		Si	M122a
73♦	1N2881	1.0k	250m	25A				150S	2 0	250m	25A	500n			1 0k	1 4k		Si	A83w
74♦	1N2882	1.0k	250m	25A				150S	3 0	250m	25A	500n			1 0k	2 1k		Si	M122a
75♦	1N2883	1.0k	250m	25A				150S	3 0	250m	25A	500n			1.0k	2 1k		Si	A83w
76	M73B	1 0k	25	50	50	8 3m		175	1 2		25	10u						Si	A3h
77	CER73C	1 0k	25	75A	48	4 0m		150A	1 2	25	100	10u△	20m	100	1.0k			Si	DO27
78	MR990A	1 0k$	250m	75A	15 §			150J	1 7	250m	75A	10u	100u	75A	1 0k			Si	A1dt
79	1N322	1 0k	25	100$	10			200	60	40	25C		300u∅	100A	1.0k			Si	DO2
80	1N322A	1 0k	.25	100$	10			200	60 ∅	40	25C	2 0u∅	60u∅	100A	1.0k			Si	DO2
81	1N561	1 0k	25	100A	1 0			140A	1 8	25	25A	15u	50m	125A	1.0k			Si	DO3
82	1N2506	1 0k	30	25A				150A	1 5	20	25	20u	.20m	150	1 0k			Si	A6
83▼#	1S2312	1 0k	300m	25A	30			125J	1 2	500m	25A	10u			1 0k			Si	
84#	10G4	1 0k	40	25A				150A	1 5	40	25A	10u			1 0k			Si△	DO3
85#	170J2	1 0k	400m	25A	3 0		600m	150A	1 2	400m	25A		300u∅	150A	1 0k	1 1 ∅		Si△	DO7
86	S233	1 0k	40	25$	15				1 3	65	25	10u			1 0k			Si	A54
87	1N3486	1 0k	40	35A	10			125A	2 0	40	25	50u			1.0k			Si	DO1
88	K2M5	1 0k	40	50	60			150C	2 0	40	25	5 0u	50m	100C	1 0k			Si	
89	1N3563	1 0k	40	75A				100A	1 2	50	25A	5 0u	20m	75A	1 0k			Si△	A50a
90	1N329	1 0k	40	100$	10			150C	60 ∅	65	25C	10u	300u∅	100A	1 0k			Si	DO2
91	1N329A	1 0k	40	100$	10			150C	60 ∅	65	25C	2.0m	60u	100A	1 0k			Si	DO2
92	1N563	1 0k	40	100A	2 0			140A	1 8	.40	25A	20u	50m	125A	1 0k			Si	DO4
93	SM103	1 0k	.45	50$	25			175	1 5	.80	25	1 0u	500u	150	1 0k			Si	A84
94	A2M4	1 0k	475	25A	25			175A	1 5	50	25	1 0u△	50m∅	150	1 0k			Si	A84
95	1N3186	1 0k	50	25A	4 0	1		150A	2 0	25	25	30u	02m	100	1 0k			Si	M82a
96	1N3232	1 0k	50	25$	12				3 3	.50			50m	150	1 0k			Si	A1cs
97#	D105C	1 0k	50	25A	30	10m	55	150A	1 2	50 †	25		15m	125A	1 0k			Si△	A100
98	MT100∅	1 0k	50	25A	10		50	175A	1 0	40	25A	50u	05m	150A	1 0k			Si	A60e
99	MT100A	1 0k	50	25A	10		50	175A	1 0	40	25A	05u	01m	150A	1 0k			Si	A60e
100	S24△	1 0k	50	25A$	15			150A	1 2	80	25	10u			1 0k			Si	A54
101	S62	1 0k	50	25$	15				1 2	80	25	100u			1.0k			Si	A54
102#	1S1223	1 0k	50	40A	25	10m		120J	95 △	50	25A	30u		25J	1 0k			Si△	
103#	S2E100	1 0k	50	40	25	20m		120	95	.50	25	30u			1 0k	1 5k		Si	A185a
104▼#	SR1FM20	1.0k	500m	40A	50 §	8 3m		100J	1 2	3.0	25A		300u	100J	1 0k			Si△	A1bv
105	5E10	1 0k	500m	50	50 §			175	1 1	500m	50	2 0u	50u	100	1 1k			Si△	DO27
106	5J10	1 0k	500m	50	50 §			175	1 1	500m	50	2 0u	50u	100	1 1k			Si△	DO15
107	M73C	1 0k	50	50	50	8 3m		175	1 2		25	10u						Si	A3h
108#	SO5-10	1 0k	500m	50	45	10m		125	1 0	500m	25	10u		25	1.0k				A171a
109#	SE05D	1 0k	50	50	48	20m	55	120	1 1	50	50	10u			1 0k			Si	M98a
110#	SW05D	1 0k	.50	50	48	20m	55	120	1 1	50	50	10u			1 0k			Si	A221d

SYMBOLS AND CODES EXPLAINED IN INTERPRETER

5. RECTIFIERS

IN ORDER OF (1) PIV, (2) MAX AVG FWD CURRENT (3) TEMPERATURE, and (4) TYPE No.

LINE No	4 TYPE No.	1 PIV (V)	MAX AVG FWD DC CURRENT 2 Io (A)	3 at TEMP (°C)	MAX RATINGS @ 25°C SURGE CUR. PEAK 1 Cy (A)	PULSE WIDTH (s)	DISS (W)	MAX. TEMP (°C)	MAXIMUM FORWARD VOLTAGE DROP Vf (V)	at If (A)	at TEMP (°C)	MAX. REVERSE CURRENT Ir @25°C & Vr (A)	Ir at T & Vr (A)	TEMP T (°C)	TEST VOLT Vr (V)	AVALANCHE RATINGS MAX V BKDN. (V)	MIN SLOPE (A/V)	DESCRIPTION MAT.	DWG. No.
1	1N4251	1 0k	.50	55A	5 0			175A	1.7	.50	25	10u			1.0k			Si	A1bh
2▼	500S10	1.0k	500m	55	35	8 3m	1 0	150A	2.0	500m	25	1 0u	20u	100	1 0k			Si	A1tp
3	1N3869	1 0k	.50	60A	5 0 §			200A	2.2	50	25	10m	5.0u	125	1.0k			Si	A1ds
4#	SD1C	1.0k	.50	60A	45	10m		100S	1.0	1 5	25A	10u			1.0k			Si△	A221b
5#	1S1234	1 0k	.50	70	35	10m		150	1 1	1.0	25	10u		25	1 0k			Si	DO1
6	1N3752	1 0k	.50	75A	20	8 0m		150A	1 5	50	25A	5 0u			1.0k			Si	A1cm
7	C1 0E2	1 0k	.50	75	35	8 0m	1.0	150S	2.0	50		1.0u	10m	100	1.0k			Si	A3s
8	CER73D	1 0k	.50	75A	48	4.0m		150A	1.2	.50	100	10u△	.20m	100	1 0k			Si	DO27
9	1T510	1 0k†	.50 ∅	85A	35			100A	1 2	.30	25	10u	.25m	100	1.0k			Si	A3x
10	2T510	1 0k†	.50 ∅	85A	35			100A	1 2	30	25	10u	.25m	100	1 0k			Si	DO1
11	3T510	1 0k†	.50 ∅	85A	35			100A	1.2	.30	25	10u	.25m	100	1.0k			Si	DO13
12	4T510	1 0k†	.50 ∅	85A	35			100A	1.2	.30	25	10u	.25m	100	1 0k			Si	DO7
13	ERD1000	1.0k†	.50 ∅	85	35			100A	1 2	30	25	10u	25m	100	1.0k			Si	M166
14	1N4011	1 0k	.50	100A	30 §			175A	1 1	.50	25	10u△	20m	100A	1.0k			Si	DO13
15	MPR10	1 0k	500m	100A	25	8 3		175J	1.8	500m	25A	5.0u	200u	175J					
16	S260	1.0k	50	100$	60				1 2	.80	25		500u	100	1.0k			Si	A54
17	TKF100	1.0k	.50	100A	30	8.3m		175A	1.1	1 0	25A	10u	.50m∅	100A	1 0k			Si	A84
18	A2M1	1.0k	.60	25	60			175A	.50		150	1.0u	.50m	150	1 0k			Si	A84a
19	A2M5	1.0k	.60	25	60			175A	.50		150	5.0u	.50m	150	1.0k			Si	A84a
20	A2M9	1 0k	.60	25	60			175A	50		150	10u	.50m	150	1.0k	100	200u	Si	A84a
21	B2M1	1 0k	.60	25	60			175A	.50		150	1.0u	.50m	150	1 0k			Si	A1rx
22	B2M5	1.0k	60	25	60			175A	50		150	5.0u	.50m	150	1.0k			Si	A1rx
23	B2M9	1.0k	.60	25	60			175A	50		150	10u	50m	150	1.0k	100	200u	Si	A1rx
24#	S12M2	1 0k	.60	25A	8 0		7 3	125				1.0u	.05m	125J	1.0k			Si△	DO14
25#	5D10⊘	1 0k	60	50A	40	10m		150S	1 2	3 0	25A		50m	100	1.0k			Si	A1bp
26	DICR1	1 0k	600m	50	20	8.3m		150S	2 0	600m	25	2.0u			1 0k			Si	A1dm
27	K3M5	1 0k	.60	50	60			150C	2 0	.60	25	5.0u	.50m	100C	1.0k			Si	
28	SD910	1.0k	60	50	11			125A	1 3	.75	25							Si	A6a
29	SM300	1 0k	.60	50$	20			150	1.2	.95	25	10u			1.0k			Si	A84
30#	P6RP10	1.0k	.60	60$	20	8.3m		125	1.2 ∅	.60	60		200u	85	700			Si	A1fx
31#	1HY100	1.0k	.60 ∅	75A	40	10m		150S	1.15	.60	25A							Si△	DO3
32	CY100	1 0k	.60 ∅	75A	40	10m		150	1.15	.60	75A				1.0k			Si△	A31j
33	1N2866	1.0k	.70	25A	30			200A				50u			1 5k			Si△	A86
34	JAN1N561	1.0k†	.75	25A	25	8 3m		175A	1 1 △	.50	25A	5 0u	.50m	175A	1.0k			Si	DO1
35	1N2775	1.0k	.75	25A$	15			165S	1.8	.75	25A	4.0u	.10m	150	1.0k			Si	A145
36	1N3243	1.0k	.75	25$	15				2.2	.75			500u	150	1 0k			Si	A1cs
37#	1NJ27	1.0k	75	25A	30	10m		120J	1 1	.75	25	10u		25	600			Si△	A185
38	75R10B	1 0k	.75	25	60			175	2 0	.75	25	5 0u	.50m	150	900			Si	
39	A3M1	1.0k	75	25	60			175A	.50		150	1.0u	.50m	150	1 0k			Si	A84a
40	A3M5	1 0k	.75	25	60			175A	.50		150	5 0u	.50m	150	1.0k			Si	A84a
41	A3M9	1 0k	.75	25	60			175A	.50		150	10u	.50m	150	1.0k	100	200u	Si	A84a
42	B3M1	1.0k	.75	25	60			175A	50		150	1.0u	50m	150	1.0k			Si	A1rx
43	B3M5	1 0k	.75	25	60			175A	50		150	5.0u	.50m	150	1.0k			Si	A1rx
44	B3M9	1 0k	.75	25	60			175A	50		150	10u	50m	150	1.0k	100	200u	Si	A1rx
45	BR410†	1.0k	750m	25	20	8.0m		150	1 1	750m	25	5.0u			1.1k			Si△	M533
46	MB277	1 0k	.75	25	15	8.3m	2 0	175A	1.2	50 ⊘	25	2 0u	75u	100	1.0k			Si	A60f
47	UT120	1.0k	.75	25A	15	8.3m	1 0		1 2	50 ⊘	25A	2 0u	75u	100A	1.0k			Si	A146f
48	.7E10	1 0k	750m	50	60 §			175	1.1	750m	25	2.0u	50u	100	1.1k			Si△	DO27
49	7J10	1.0k	750m	50	60 §			175	1.1	750m	25	2.0u	50u	100	1.1k			Si△	DO15
50	1N2617	1.0k	.75	50A	30			175A	1.1	.50	25A	10u	.50m	150A	1.0k			Si	A31a
51	1N3723	1.0k†	.75	50A	12			175A	2.2	75	50A	5.0u	.50m	150A	1.0k			Si	A1bp
52#	1S109⊘	1.0k	75	50A	40			150	1.25		150A	10u			1.0k			Si△	A89
53	A3M3	1 0k†	75	50A	35			175A	1 1	.50	25	10u△	.30m⊘	150	1.0k			Si	A84
54	A1000	1.0k	.75	50	15		1 0	100	1 0	.75	25	5.0u			1.0k			Si	A3p
55	CER73F	1.0k	75	50A	50	8.0m		175A	1.2	75	25	10u			1 0k			Si	F29
56	D1000	1.0k	75	50	15		1.0	175	1.0	75	25	5.0u			1.0k			Si	A50
57	DK7510	1 0k	750m	50A	60			175A	1.2	750m	25A	10u	100u	100	1.0k			Si	DO27
58	H1000	1.0k	75	50	15		1 0	175	1.0	75	25	5.0u			1.0k			Si	DO3
59	M73	1.0k	.75	50	50	8 3m		175	1.2		25	10u						Si	A3h
60#	P1000A	1 0k	.75	50	50	10m		150	1.0	1.0	25	10u			1.0k			Si	DO29
61#	S1D	1.0k	.75	50	48	20m	.83	120	1 1	.75	50	10u			1 0k			Si	A6a
62	SD910A	1.0k	.75	50	17			125A	1 2	.75	25							Si	A6a
63	SM100	1.0k	.75	50$	35			175†	1.1	.50	25	10u			1.0k			Si	A84
64#	SW1D	1 0k	75	50	48	20m	83	120	1 1	75	50				1.0k			Si	
65	T1000	1.0k	.75	50	15		1 0	100	1 0	.75	25	5.0u			1.0k			Si	M21
66	1N3281	1.0k	.75	70A	25	8.0m		150A	1.2	.75	25	5.0u			1.0k			Si	A1cm
67	CER73	1.0k	.75	75A	48	4 0m		150A	1.2	75	100	10u△	.20m	100	1.0k			Si	DO27
68	S61	1 0k	.75	80$	15				1.3	1.2	25	10u			1.0k			Si	A54
69#	D108	1.0k	.80	25A	30	10m	1.0	150A	1.2	.80 †	25		.15m	125A	1.0k			Si△	A100
70	EM410	1.0k	.80	25	50				1.1	.80	25	10u	.20m	85A	1.0k				A1bg
71	PE410	1.0k	.80	35A$	50			135A	1.1	.80	25	10u	.20m∅	85A	1.0k			Si	A3w
72	PE510	1.0k	80	35$	60			135A	1 1	80	25		250u	100	1.0k			Si	A3w
73#	1S1348	1.0k	.80	50A	40	8.3m		150J	1.2	3.0	25A	10u∅	.50m∅	150J	1.0k			Si△	A89b
74	K4M5	1.0k	.80	50	60			150C	2.0	.80	25	5.0u	.50m	100C	50			Si	
75#	SR1C20	1 0k	800m	50A	40 §	8.3m		150J	1.2	3.0	25A	10u	500u	150J	1.0k			Si△	A34d
76▼#	1S2308	1.0k	800m	65A	60			150J	1.8	4.0	25A	10u			1.0k			Si	A56a
77	A4M1	1.0k	85	25	60			175A	.50		150	1.0u	.50m	150	1.0k			Si	A84a
78	A4M5	1.0k	.85	25	60			175A	.50		150	5 0u	.50m	150	1.0k			Si	A84a
79	A4M9	1.0k	85	25	60			175A	.50		150	10u	.50m	150	1.0k	100	200u	Si	A84a
80	B4M1	1.0k	.85	25	60			175A	.50		150	1.0u	.50m	150	1.0k			Si	A1rx
81	B4M5	1.0k	.85	25	60			175A	.50		150	5.0u	.50m	150	1.0k			Si	A1rx
82	B4M9	1.0k	.85	25	60			175A	.50		150	10u	.50m	150	1.0k	100	200u	Si	A1rx
83#	SSiB0580	1.0k	.85	45A	50	10m		150J	1.0	1.0	25J	1.0u			1.0k			Si△	M441
84	SM200	1.0k	85	50$	45			150	1.0	1.5	25	10u			1.0k			Si	A84
85	SM800	1.0k	.85	50	35			125A	1.0	.50	25	.01u	20m	150	1.0k			Si	A84
86	1N1443A	1 0k†	95	25A	25			135A	1.45	.95	25A	50u		25A	1.0k			Si	DO1
87	1N2224	1.0k	1.0	25$	20			150	.60	1 5	25		750u	150	1.0k			Si△	DO4
88	1N2224A	1 0k	1.0	25$	20			150	.60	1 0	25		350u	150	1.0k			Si△	DO4
89	1N2225	1 0k	1 0	25$	20			150	.60	15	25		750u	150	1.0k			Si△	S35
90	1N2225A	1.0k	1.0	25$	20			150	.60	1.0	25		350u	150	1.0k			Si△	S35
91	1N3252	1.0k	1.0	25$	20				1 1	1 0			500u	150	1.0k			Si	A1cs
92	1N3957	1.0k	1.0	25A	20			200A	1.0	400m	25A	10u	100u	100A	1.0k			Si	A60
93	JAN1N4586	1.0k$	1.0	25A	50	8.3m		200A	1.2 †	3 0	25	1.0u	200u	150	1.0k			Si	DO29
94	100R10B	1 0k	1.0	25	60			175	2.0	1.0	25	5.0u	50m	150	900			Si	
95	A5M1	1.0k	1 0	25	60			175A	.50		150	1.0u	.50m	150	1.0k			Si	A84a
96	A5M5	1.0k	1 0	25	60			175A	.50		150	5.0u	.50m	150	1.0k			Si	A84a
97	A5M9	1.0k	1.0	25	60			175A	.50		150	10u	.50m	150	1.0k	100	200u	Si	A84a
98	B5M1	1 0k	1.0	25	60			175A	.50		150	1.0u	.50m	150	1.0k			Si	A1rx
99	B5M5	1.0k	1.0	25	60			175A	.50		150	5.0u	.50m	150	1.0k			Si	A1rx
100	B5M9	1 0k	1 0	25	60			175A	.50		150	10u	.50m	150	1.0k	100	200u	Si	A1rx
101	B223-10	1.0k	1.0	25	60			175A	.50		150	5.0u	.50m	150A				Si	A1rx
102	BR510†	1.0k	1.00	25	25	8.0m		150	1.10	1.0	25	5.0u			1.1k			Si△	M533
103	BR810B†	1.0k	1 00	25	50	8.0m		150	1.10	1.0	25	5.0u			1.1k			Si△	M535
104#	E101	1.0k	1.0	25A	50	10m		150A	1.2	1 0 †	25A	1.0u	200u	125A	1.0k			Si△	DO29
105	EM510	1.0k	1.0	25	50				1.1	1.0	25	1.0u	.10m	100A	1.0k				A1bg
106	MB251	1 0k	1.0	25	20	8.3m	2.0	175A	1.0	.6 ⊘	25	1.0u	75u	100	1.0k			Si	A60f
107	NPC1000	1.0k	1.0	25	25			150A	1.1	1.0	25	30u						Si	A3n
108	S10100	1.0k	1.0	25A	35			175A	.50 ∅	.25	150A		.50m∅	150A	1.0k	1.8k		Si△	A1gf
109	SLA19AB	1 0k	1.0	25	60	8.3m		150A	1.0	1.0	25	1.0u	.10m	100	1.0k			Si	A69
110	SLA19C	1.0k	1.0	25	60	8.3m		150A	1.1	1.0	25	5.0u	.25m	100	1.0k			Si	A69

SYMBOLS AND CODES EXPLAINED IN INTERPRETER

5. RECTIFIERS

IN ORDER OF (1) PIV, (2) MAX AVG FWD CURRENT (3) TEMPERATURE, and (4) TYPE No.

LINE No.	4 TYPE No.	1 PIV (V)	MAX AVG FWD DC CURRENT 2 Io (A)	3 at TEMP (°C)	MAX RATINGS @ 25°C SURGE CUR. PEAK 1 Cy (A)	PULSE WIDTH (s)	DISS. (W)	MAX. TEMP (°C)	MAXIMUM FORWARD VOLTAGE DROP Vf (V)	at If (A)	at TEMP (°C)	MAX. REVERSE CURRENT Ir @25°C & Vr (A)	Ir at T & Vr (A)	TEMP T (°C)	TEST VOLT Vr (V)	AVALANCHE RATINGS MAX V BKDN. (V)	MIN SLOPE (A/V)	MAT.	DESCRIPTION DWG. No.
1	UT347	1.0k	1.0	25A	20	8.3m	4 0		1 0	.4 ∅	25A	2.0u	75u	100A	1 0k			Si	A60
2#	SJ803H	1 0k	1 0	30A	32	10m		150J	1 0	750m	25A	10u	50u	120A	1 0k			Si△	A31n
3	1B10	1 0k	1 0	50C$	11			150C	2 0	1 0	25	2.0u	05m	100	1 0k			Si	M79
4	1C10∅	1 0k	1 0	50C$	11			150C	2 0	1.0	25	2.0u	.05m	100	1 0k			Si	M116a
5	1N4586	1.0k†	1 0	50A$	50			175A	1 0	1 0	25	10u△	25m	150A	1 0k			Si	DO29
6#	1S850	1 0k	1 0	50	50	10m			1 0	1.0	25A		50m	150J	1.0k				A200
7#	1S1066	1.0k	1 0	50A	60	10m	1 0	150A	1 0	1.5	25	10u	10m	125	1.0k	1 4k		Si	A52j
8	10C10△	1.0k†	1 0	50A				175A	1.2 △	1.0	25A	10u						Si	A50
9	AA1000	1 0k	1 0	50	15		1 0	100	.90	1.0	25	5 0u			1 0k			Si	A3p
10	BTB1000	1 0k	1 0	50	50	8.0m		150A	1 1	1 0	50	10						Si	DO27
11	BTM1000	1 0k	1 0	50	30	8 0m		150A	1 1	1.0	50	10						Si	A1ry
12#	BYY37	1 0k	1.0	50A	50			150J	1.3	2 0	25J	5 0u			1.0k			Si△	DO13
13	DER1	1 0k	1 0	50	40	8 3m	2 0	150S	2.0	1 0	25	2 0u	20u	125	1.0k			Si	A1dm
14	E10	1 0k	1 0	50	75 §			175	1 1	1.0	25	2.0u	50u	100	1.1k			Si△	DO27
15	EM10	1 0k	1.0	50	75 §			175	1 1	1.0	25	2.0u	50u	100	1 1k			Si△	DO41
16	HA1000	1 0k	1 0	50	15		1 0	175	.90	1 0	25	5 0u			1 0k			Si	DO3
17	K5M5	1 0k	1 0	50	60			150C	2 0	1 0	25	5.0u	50m	100C	1 0k			Si	
18▼#	PCP10†	1 0k	1 0	50	50			125S	2 0	1 0	25	10	100u	150	1 0k			Si	M584
19	TA1000	1 0k	1 0	50	15		1 0	100	90	1 0	25	5 0u			1.0k			Si	M21
20♦	1N4249	1 0k	1 0	55A	25	8 3m		160A	1.2	1 0	55A	1 0u	25u	125	1.0k			Si	A1tc
21	CA102VA	1 0k	1 0	55A$	60			150A	1 2	1.0	25		30m	150	1.0k			Si	A32
22	CA152VA	1 0k	1 0	55A$	60			150A	1.2	1 5	25		.30m	150A	1.0k			Si	A32
23	CC102VA	1 0k	1 0	55A$	60			150A	1 2	1 0	25		30m	150	1.0k			Si	C8
24	CC152VA	1 0k	1 0	55A$	60			150A	1 2	1 5	25		.30m	150A	1 0k			Si	C8
25	CE510	1.0k	1.0	55A$	50			150A	1 1	1 0	25		.10m	100	1 0k			Si	A1cs
26	CF102VA	1 0k	1 0	55A$	60			150A	1.2	1.0	25		30m	150	1.0k			Si	F8
27	CP102VA	1 0k	1 0	55A$	60			150A	1 2	1 0	25		30m	150	1 0k			Si	C9
28	CP152VA	1 0k	1 0	55A$	60			150A	1.2	1 5	25		.30m	150A	1.0k			Si	C9
29	F10	1 0k	1 0	55A	70				1 1	1 0	25A					1 1k		Si	A3r
30	SC10	1 0k	1.0	55$	50			175	1.2	1 0	25	1 0u	50u	125	1 0k			Si	A1bs
31	SCA10	1 0k	1.0	55$	50			175	1 2	1 0	25	1 0u	50m	125	1 0k	1.4k		Si	A1bs
32	SCE10	1 0k	1 0	55$	50			175S	1.0	1.0	25	1.0u	50u	125	1.0k				A1sd
33	SEN1100	1 0k	1.0	55	50	8 3m		170A	1 0	1.0	25	5.0u	300u	150	1 0k			Si△	DO15
34▼#	SB2C	1 0k	1.0	60A	100	10m		150J	1 1	1 5	25A	10u			1.0k			Si	A268
35	1N3761	1 0k	1 0	70A$	30			150A	1 0	1 5	25	5 0u			1.0k			Si	A1cm
36	1D10	1 0k	1 0	75C	35			150C	2.0	1 0	50C	2.0u	05m	100C	1 0k			Si	M116*
37♦	1N4007	1 0k	1 0	75A	30	8 3m		175A	1 6	1 0	75A	10u	30u∅	75A	1 0k			Si	DO41
38	5A10	1 0k	1 0	75A	50	8 3m			95	1 0	25A	10u						Si	DO27
39	10D10	1 0k	1 0	75A	50	8 3m			.95	1.0	25A	10						Si	DO39
40	CB100#	1 0k	1 0	75	50	8 0m		175A	1 1	1 0	25A	2 0u	50u	100	1 0k			Si△	A1bg
41#	EM513	1 0k	1.0	75	50	10m		175J	1.1	1 0	25A	5 0u						Si△	A1bg
42	ER187	1 0k	1 0	75A	30 §			175J	1 1	1 0	25A	10u	50m∅	75A	1 0k			Si	DO27
43	G100M	1 0k†	1 0	75A	50			150A	1 0	1 0	25A	10u	200m∅	100A	1 0k			Si	A50b
44▼	GER4007	1 0k	1 0	75	30			175	1 1	1 0	25	100u						Si	A249b
45▼	HEP160-RT	1.0k	1 0	75$	30			175†										Si	DO41
46	J10	1.0k	1 0	75A	50	8 0m	1 0	175A	1.0	1.0	25A	5 0u	50u	100A	1.0k			Si	DO15
47	A14P	1.0k	1 0	90A	50	8 3m	1 0k	175J	1 0	1 0	25J	5 0u	20m	165	1 0k	1 6k		Si△	A94g
48	1F10	1 0k	1 0	100	50		1 0	150C	1.3	2 0	25	2.0u	50u	100	1.1k			Si△	F22
49	A5M2	1.0k†	1 0	100A	45			200A	1.0	75	25	1 0u△	20m∅	150	1 0k			Si	A84
50	MR1000	1 0k	1 0	100A	50	8 0m		150A	1 0	1 0	25A	2 0u	100u	100	1.0k			Si	A1dk
51	R1000	1 0k	1 0	100	50 §	8 0u		150A	1 0	1 0 †	25	2.0u△	100u	100	1.0k			Si	
52	SI1000E	1 0k	1 0	100A	50			150C	1 0	1 0	25A	5.0u			100			Si	DO27
53	SLA1000LCD†	1 0k	1 0	100					1 0	1 0		1.0u	100u	100	1 0k			Si	M547
54	SM101	1.0k	1 0	100$	45			200	1 0	1.2	25	1 0u			1 0k			Si	A84
55	SM520	1 0k	1 0	100$	45			150†	1.0	1 0	25	10u			1 0k			Si	A84
56	BY1002	1 0k	1 0	150C$	25			150C	90	1 0	25C	4 0u	50m	150C	1 0k			Si△	DO2
57	BY1102	1 0k	1 0	150C$	25			150C	80	1 0	25C	1.0u	.10m	150C	1.0k			Si△	DO2
58	BY1202	1 0k	1 0	150C$	25			150C	1 0	1 0	25C	10u	1 0m	150C	1.0k			Si△	DO2
59#	SD910S	1 0k	1 1	40A	40	10m		170A	1 0	60	25A	50u	100m	150A	1 0k			Si△	DO3
60#	SSiB0680	1 0k	1 1	45A	50	10m		160J	1 0	2.0	25J	1.0u			1 0k			Si△	A3v
61#	SSiC1780	1.0k	1 1	45A	100	10m		150J										Si△	M441
62	HC73F	1 0k	1.1	50A	50	8 0m		175A	1 2	1 1	25	10u			1.0k			Si	F29
63	MH73	1.0k	1 1	50	50	8 3m		175	1 2		25	10u						Si	A3h
64	HC73	1 0k	1 1	75A	75	4 0m		150A	1 2	1 1	100	10u△	.20m	100	1.0k			Si	DO27
65	A6M1	1 0k	1 2	25	60			175A	.50		150	1 0u	.50m	150	1.0k			Si	A84a
66	A6M5	1 0k	1 2	25	60			175A	.50		150	5.0u	50m	150	1 0k			Si	A84a
67	A6M9	1 0k	1 2	25	60			175A	50		150	10u	.50m	150	1.0k	100	200u	Si	A84a
68	B6M1	1 0k	1 2	25	60			175A	.50		150	1.0u	50m	150	1 0k			Si	A1rx
69	B6M5	1.0k	1 2	25	60			175A	.50		150	5 0u	.50m	150	1 0k			Si	A1rx
70	B6M9	1 0k	1 2	25	60			175A	50		150	10u	.50m	150	1 0k	100	200u	Si	A1rx
71	UT363	1.0k	1 2	25A	20	8 3m	4 0	175A	1.0	50 ∅	25A	2 0u	75u	100A	1 0k			Si	A60
72	EC100	1.0k	1 2	50A	75	8 0m		150A	1.2 △	1 2	25A	2 0u△	10m∅	100A	1 0k			Si△	A3c
73	K6M5	1 0k	1.2	50	60			150C	2.0	1 2	25	5 0u	.50m	100C	1 0k			Si	
74#	1S1892	1 0k	1 2	65A	60			175J	1 2	1 5	25A		400m	175J	1 0k			Si	A56b
75#	SSiB0180	1 0k	1 25	45A	50	10m		180J	1.1	2.5	25J	1.0u			1 0k			Si△	A31v
76	TM105	1 0k	1 25	75C				175C	2.0	80	25		50m	150C	1 0k			Si	A145
77#	F101	1.0k	1 3	25A	70	10m		150A†	1 2	1 3 †	25		20m	125A	1 0k			Si△	DO13
78	RA132VA	1 0k	1 3	55A$	60			150A	1.2	1.3	25		30m	150	1 0k			Si	A34
79#	1AS029	1 0k	1.5	25	125	10m		150A	1 25	5 0	25	1.0u	05m	100	1 0k	1 7k		Si	DO1
80	150R10B	1 0k	1 5	25	60			175	2.0	1 5	25	5 0u	50m	150	900			Si	
81	A7M1	1 0k	1 5	25	60			175A	.50		150	1 0u	50m	150	1.0k			Si	A84a
82	A7M5	1 0k	1 5	25	60			175A	50		150	5.0u	50m	150	1 0k			Si	A84a
83	A7M9	1 0k	1 5	25	60			175A	50		150	10u	.50m	150	1 0k	100	200u	Si	A84a
84	B7M1	1 0k	1 5	25	60			175A	.50		150	1 0u	50m	150	1 0k			Si	A1rx
85	B7M5	1.0k	1 5	25	60			175A	50		150	5 0u	50m	150	1.0k			Si	A1rx
86	B7M9	1 0k	1 5	25	60			175A	.50		150	10u	50m	150	1 0k	100	200u	Si	A1rx
87	BR810A†	1.0k	1 50	25	50	8 0m		150	2.00	75	25	5 0u			1 0k			Si△	M539
88	BR810D†	1 0k	1.50	25	50	8 0m		150	1 10	1 0	25	5 0u			1.1k			Si△	M536
89	M1M1	1 0k	1 5	25	250			175A	50		150	2 0u	5.0m	150	1 0k			Si	A1ep
90	M1M5	1.0k	1 5	25	250			175A	50		150	10u	5.0m	150	1.0k			Si	A1ep
91	M1M9	1.0k	1 5	25	250			175A	.50		150	10u	5.0m	150	1.0k	100	200u	Si	A1ep
92	MB243	1.0k	1 5	25	25	8 3m	2 0	175A	1 0	8 ∅	25	.50u	.05m	100	1 0k			Si	A60f
93	PS2347	1.0k	1 5	25A$				175A	2.0	.20	25A	6 0u			1.0k			Si	M22
94#	SA10M1	1 0k	1 5	25A	47		2 0	150A	2.0	10	25J	10u	300u	150J	1.0k	1.2k∅		Si△	DO27
95	SI10	1.0k	1 5	25A	80			150C	1 0	1 5	25A	1.0u			1 0k			Si	A1bc
96	UT364	1.0k	1 5	25A	25	8 3m		175A	1.0	.75 ∅	25A	2.0u	75u	100A	1 0k			Si	A60
97#	ZAR110	1.0k	1 5	25	26 †			150A	1.5	1.5	25	5 0u	20m	100	1 0k	1.8k		Si△	A42
98#	ZAR610	1 0k	1 5	25	25	5 0m		150A	1.2	1.5	25	5 0u	150m	100	1 0k	1.8k		Si△	A42
99#	ZAR710	1 0k	1 5	25	25	5 0m		150A	1.2	1 5	25	5.0u	150m	100	1 0k	1 8k		Si△	A1fr
100	SCBR10	1 0k	1.5	30C	20			150										Si	M45a*
101#	SL1003M	1 0k	1 5	30A	30	2.0m		125C	1.34	7.5	25A	5 0u	110u	100C	1.0k			Si△	S33
102	1N5054	1 0k†	1 5	40A	50 §			170A	1.3	1 5	40A		50m	170A	1.0k			Si	DO27
103#	1S925	1 0k	1 5	40A	80	10m		150J	1.05 △	1 5	25A		.16m	150J	1.0k			Si△	A56
104#	S2A100	1 0k	1 5	40A	80	10m		150J	1 05 △	1 5	25A		.16m	25A	1 0k			Si△	A56
105#	S12CN1	1 0k	1 5	40A	45		1 7	150A				10u	.25m	150J	1 0k			Si△	A31n
106#	S12M1	1.0k	1.5	40A	47.k	2.0m		170A				10u	30m	150	1 0k			Si△	DO27
107#	1S1076	1.0k	1.5	50A	60	10m	1 0	150A	1 0	1.5	25	10u	.10m	125	1 0k	1 4k		Si	A52j
108	1 5E10	1 0k	1 5	50A	75 §			175A	1 1	1 5	25A	2 0u	50u	100	1.1k			Si△	DO27
109	1 5J10	1 0k	1 5	50	75 §			175	1 1	1 5	25A	2.0u	50u	100	1.1k			Si△	DO15
110	DRS110	1 0k	1 5	50A	50 §	8 3m		125A	1 0	1 0	25A	10u	200u	125A	1 0k			Si	A168c

SYMBOLS AND CODES EXPLAINED IN INTERPRETER

5. RECTIFIERS

IN ORDER OF (1) PIV, (2) MAX AVG FWD CURRENT (3) TEMPERATURE, and (4) TYPE No.

LINE No	4 TYPE No.	1 PIV (V)	MAX AVG FWD DC CURRENT 2 Io (A)	3 at TEMP (°C)	MAX RATINGS @ 25°C SURGE CUR. PEAK 1 Cy (A)	PULSE WIDTH (s)	DISS. (W)	MAX TEMP (°C)	MAXIMUM FORWARD VOLTAGE DROP Vf (V)	at If (A)	at TEMP (°C)	MAX. REVERSE CURRENT Ir @25°C & Vr (A)	Ir at T & Vr (A)	TEMP T (°C)	TEST VOLT Vr (V)	AVALANCHE RATINGS MAX V BKDN. (V)	MIN SLOPE (A/V)	MAT	DESCRIPTION DWG. No.
1	K7M5	1 0k	1 5	50	60			150C	2 0	1.5	25	5.0u	50m	100	1 0k			Si	
2#	SE1 5D	1 0k	1 5	50	63	20m	1 6k	120	1.1	1 5	50				1 0k			Si	M99a
3#	BYX45-1000R	1 0k	1 5	55A	40	10m	800 Ø	150J	1 45	5 0	25J		100u	125J	1 0k	2 0k		Si	DO1
4	CF152VA	1 0k	1 5	55A$	60			150A	1 2	1.5	25		30m	150	1 0k			Si	F8
5▼#	SA2C	1 0k	1 5	60A	100	10m		140J	930m	1 5	25A	10u			1 0k			Si	A268
6	1N5399	1 0k	1 5	70C	50 §			170C	1.4	1 5	70C		30m	150	1.0k			Si	DO15
7▼	CTN1000	1 0k	1 5	75	50			175A	1 0			10u			1.0k			Si	M594*
8▼	CTP1000	1 0k	1 5	75	50			175A	1 0			10u			1.0k			Si	M594a*
9▼	VB1000	1 0k	1 5	75	50			175A	1.0			10u			1 0k			Si	M594b*
10#	1WS10	1 0k	1.5	100C	25 §	10m		125J	1 5	5.0	100C		1 5m	125J	1 0k			Si*	A19a
11#	SSiC0880	1 0k	1 6	45A	100	10m		180J	1.0	3 0	20J	1 0u			1 0k			Si△	A31v
12	1N1444A	1 0k	1 6	50$	30				1 2	1.0	25	50u	500u	150	1.0k			Si	S25a
13	1N1444B	1 0k	1.6	50$	30				1.2	1 0	25	10u	300u	150	1.0k			Si	S25a
14	S12100	1 0k	1 6	120C	35		15 ØØ	175J	1.0 Ø	1 0	25A		10mØ	100C	1.0k	1 8k		Si△	DO13△
15	1N1443	1 0k	1.6	140C	20			175J	1 5	2.5	25	500u	1 5m	150J	1 0k			Si	DO1
16	1N1443B	1 0k	1 6	140C	25			150J					.30m	150	1 0k			Si	A34a
17	1N1444	1 0k	1 6	140C	20			175J	1 5	2.5	25	500u	1 5m	150J	1 0k			Si	S25
18	MDA922-9†	1 0k†	1 8	55A	100			175J	1.1	750m	25J	20u			1 0k			Si△	M535a
19#	10B10	1 0k	1 8	125B	40	10m		175A	1.1	3 0	25A	50u	50m	150A	1 0k			Si△	DO1
20#	SSiC1180	1 0k	1 9	45A	100	10m		180J	1 0	3 0	20J	1.0u			1.0k			Si△	A230
21	1N3942	1 0k†	2 0	25	30			165	1 5	2 0	25	200u	50m	150	1.0k	1.4k		Si	DO13
22	200R10B	1 0k	2 0	25	60			175	2.0	2 0	25	5 0u	.50m	150	900			Si	
23	AB1000	1 0k	2 0	25	15		3 0	100	1.25	1.0	25	5.0u			1 0k			Si	A3q
24	BR710A†	1 0k	2 0	25	25	8 0m		150	1.2	1 0	25	5.0u			1 1k			Si△	M534
25#	F102	1 0k	2 0	25A	70	10m	3 0	150A†	1.2	2 0 †	25		20m	125A	1.0k			Si△	DO13
26	GR24	1 0k	2 0	25	20			125	1.3	75	25	20u	30m	100A	1.0k			Si	A1ry
27	M2M1	1 0k	2 0	25	250			175A	.50		150	2 0u	5.0m	150	1 0k			Si	A1ep
28	M2M5	1 0k	2 0	25	250			175A	50		150	10u	5.0m	150	1 0k			Si	A1ep
29	M2M9	1 0k	2 0	25	250			175A	50		150	10u	5 0m	150	1.0k	100	200u	Si	A1ep
30	MB235	1 0k	2 0	25	25	8 3m	2 0	175A	1.0 △	1 ∅	25	.05u	01m	100	1.0k			Si	A60f
31	SEN2A10†	1 0k	2 0	25	30	8 3m		150A	1.2	1 0		10u	100u	100	200			Si	M79b
32	SEN2100	1 0k	2 0	25	150	8 3m		170A	1.2	2 0	50		25u	50	1.0k			Si△	DO27
33♦#	SKA1/10	1 0k	2 0	25A	90	10m		150J	900m§	1 2	25J	20uØ			1 0k	1 7k		Si	S170c
34	SLA29A	1 0k	2 0	25	80	8 3m		150A	95	2 0	25	1 0u	10m	100	1 0k			Si	A69
35	SLA29B	1 0k	2 0	25	80	8 3m		150A	1.0	2 0	25	1 0u	.10m	100	1 0k			Si	A69
36	SLA29C	1 0k	2 0	25	80	8 3m		150A	1.0	2 0	25	5 0u	25m	100	1 0k			Si	A69
37	1N5178	1 0k	2 0	50A	200			175A	1 2 †	2 0	50A		25u	50A	1 0k			Si	DO27
38	20A10	1 0k	2 0	50	50			170A	1.3	0	50	10u	25m	50	1 0k			Si	DO27
39	B172-100	1 0k	2 0	50	60			150C	2.0	2 0	25	5 0u	50m	100	1.0k			Si	
40	BFW1000†	1 0k	2 0	50A	50			100C	1.1	1 0	25A								M40a
41▼	FW1000†	1 0k	2 0	50A	50			125A	900m	1 0	25A	5 0u						Si	M40a
42	K8M5	1.0k	2 0	50	60			150C	2.0	2 0	25	5 0u	.50m	100	1 0k			Si	
43▼#	MCP10†	1 0k	2 0	50	50			125S				10u	100u	125	1 0k			Si	S349
44	PD100	1 0k	2 0	50A	50			125A	.90	1 0	25A	5 0u						Si	M40a*
45	SI10A	1 0k	2 0	50A	80			150C	1.0	3.0	25A	1 0u			1 0k			Si	A1bc
46	2F10	1 0k	2 0	75C	50			150C	1.3	2 0	25C	2 0u	50u	100C	1.1k			Si△	F22
47	HB1000	1 0k	2 0	75A	200			175C	1.0	2 0	25A	5 0u			1 0k			Si	A179b
48♦#	SiDA0 5P	1 0k	2 0	85C	40 §	10m		150J	1.4	3 0	25J	2 0u		25J	1.0k	1 7k		Si	A9a
49	FB1000†	1 0k	2 0	100	50 §	8 0m		150A	1.0	1 0	25	10u†						Si△	M79a
50#	1S1357	1 0k	2 0	124C	40	8 3m		150J	1.2	3.0	25A	10uØ	.50mØ	150J	1 0k			Si△	S48c
51#	SR2B20	1 0k	2 0	124C	60			150J	1.2 †§	3 0	25C	10u	500u	150J	1.0k				S157a
52	250R10B	1 0k	2 5	25	250			175	2.0	2 5	25	5 0u	50m	150	900			Si	
53	M3M1	1 0k	2 5	25	250			175A	50		150	2 0u	5 0m	150	1 0k			Si	A1ep
54	M3M5	1 0k	2 5	25	250			175A	.50		150	10u	5.0m	150	1.0k			Si	A1ep
55	M3M9	1 0k	2.5	25	250			175A	50		150	10u	5.0m	150	1 0k	100	200u	Si	A1ep
56#	SL1003F	1 0k	2 5	30A	30	2 0m		150C	1 05	7 5	25A	5 0u	110u	100C	1 0k			Si△	DO1
57▼	HEP170-RT	1.0k	2 5	75$	35			175†										Si	DO41
58#	SJ1003F	1 0k†	2 5	100A	30			150A	1.0	75	25A	10u	.30m	150A	1.0k			Si△	DO3
59	1N2534	1 0k	2 5	150C$	50			150C	1.2	4 0	25C	4.0u	.50m	150C	1 0k			Si	DO10
60	1N2545	1 0k	2 5	150C$	50			150C	1.0	4 0	25C	1.0u	.10m	150C	1.0k			Si△	DO10
61	1N2556	1 0k	2 5	150C$	50			150C	1.5	4.0	25C	10u	1.0m	150C	1.0k			Si△	DO10
62	BY2002	1 0k	2 5	150C$	50			150C	1.2	2 5	25C	4.0u	.50m	150C	1 0k			Si△	DO4
63	BY2102	1 0k	2 5	150C$	50			150C	1.0	2.5	25C	1.0u	.10m	150C	1.0k			Si△	DO4
64	BY2202	1 0k	2 5	150C$	50			150C	1.5	2.5	25C	10u	1.0m	150C	1 0k			Si△	DO4
65	BY3002	1 0k	2 5	150C$	50			150C	1.2	2.5	25C	4.0u	50m	150C	1 0k			Si	S35
66	BY3102	1 0k	2 5	150C$	50			150C	1.0	2 5	25C	1 0u	10m	150C	1 0k			Si	S35
67	BY3202	1 0k	2 5	150C$	50			150C	1.5	2.5	25C	10u	1.0m	150C	1.0k			Si	S35
68	MA100	1.0k	2 5	150B	30			190B	1.0 △	2 5	150B	15u△						Si△	DO4
69	TM104	1.0k	2 7	75C				175C	2.0	2 0	25		.50m	150C	1.0k			Si	A145
70	1N2242	1 0k	3 0	25$	20			150	.60	1 5	25		750u	150	1 0k			Si△	DO4
71	1N2242A	1 0k	3.0	25$	100			150	60	5 0	25		350u	150	1 0k			Si△	DO4
72	1N2243	1 0k	3.0	25$	20			150	60	1 5	25		750u	150	1.0k			Si△	S35
73	1N2243A	1 0k	3 0	25$	100			150	.60	5.0	25		350u	150	1 0k			Si△	S35
74	1N3650	1 0k	3 0	25	25			190S	1.1	3.0	25		.20m	150	1 0k			Si△	DO4
75	30R10	1 0k	3 0	25	200	8 0m	3 0	25	1.0	3.0	25	10u	50u	100	1 0k			Si	A1rz
76	300R10B	1 0k	3 0	25	250			175	2.0	3 0	25	5 0u	50m	150	900			Si	
77	AC1000	1 0k	3 0	25A	50			150C	1.0	3 0	25A	5 0u			1 0k			Si	A1ey
78▼	HEPR0098-RT	1 0k	3.0	25$	300			175†										Si	A179
79	M4M1	1 0k	3 0	25	250			175A	50		150	2 0u	5 0m	150	1.0k			Si	A1ep
80	M4M5	1 0k	3 0	25	250			175A	50		150	10u	5.0m	150	1 0k			Si	A1ep
81	M4M9	1 0k	3 0	25	250			175A	.50		150	10u	5 0m	150	1 0k	100	200u	Si	A1ep
82	3BR10†	1 0k	3 00	30	20	8 0m		125C											M530
83	1N5003	1.0k†	3 0	40A	300 §			175A	1 0 †	3.0	75A		1 0m	175A	1.0k			Si	M176a
84#	SSiC1280	1 0k	3 0	45A	100	10m		180J	1 0	3 0	20J	1 0u			1 0k			Si△	A231
85	1N4145	1 0k	3.0	50A	300	8 3m		175A	1.0	3 0	50A		100u	50A	1.0k			Si	DO7
86#	3NC12	1 0k	3 0	50A	90			150J	1 2	3 0	25A		1.0	150J	1.0k			Si	S19s
87▼	HAB100	1.0k	3.0	50	300	8 3m		150A	1 1	3 0	25	5 0u	150u	100	1 0k			Si	A1ez
88	S3A10	1 0k	3 0	50A	300			150C	1.0	3 0	25A	1 0u			1.0k			Si	A1ez
89#	S8-10	1 0k	3 0	50	200	10m		150	1.1	8 0	25	50u			1 0k			Si	S19m
90	S1000	1 0k	3 0	50	25		10	175	1 0	1 0	25	5.0u				1 0k		Si	DO4
91	SLA5203	1 0k	3.0	55	300			175	1 0	3 0	25	5 0u	12m	100	1.0k			SL	A31a
92	1N4725	1.0k	3 0	75A	300			175A	1.0	3 0	75		1.0m	175	1 0k			Si	A179a∅
93	HC1000	1 0k	3 0	75	300		3 0	175	1 0	1 0	25		1.0m	25	1 0k			Si	A179
94	S60∅	1 0k	3 0	80$	20				1.3	5.0	25	100u			1 0k			Si	S48
95#	S10BR2	1 0k%	3 0	95B	53			130B	.55 Ø	1.5	25		2 0m	125	1 0k			Si	S81
96	3E10	1 0k	3 0	100	200	8 0m	3 0	175	1 2	3 0	100	10u	100u	50	1 1k			Si△	A1ec
97#	FD103	1 0k	3 0	100C	70	10m		150C	1.4	10	25C		300u	125C	1 0k			Si△	DO13
98	HR1000	1 0k	3 0	100	300 §	8 0u		150A	1 0	3 0 †	25	5 0u△	250u	100	1.0k			Si	A1sm
99	1N5408	1 0k	3 0	105C	200 §			170C	1 2	3.0	105C		50m	150C	1.0k			Si	A3q
100	SEN3100	1 0k	3 0	105C	200	8 3m		170A	1.2	3 0	25	5 0u	500u	150	1.0k			Si△	DO27
101#	1S419	1 0k†	3 0	125S	33			150S	1 6	10	25S	5.0u	300u	150	1 0k			Si	S61△
102	30S10	1 0k	3 0	125	150 §			175J	1.0 †	3.0	25	5 0u	300u	125	1.0k			Si	A1ed
103#	DK003	1 0k	3 0	125B$	35			125B	1 5	3.0	25		30m	125B	1.0k			Si△	S4c
104	3F100∅	1 0k	3 0	140B	40	10m		175A	1.0	1.0	25A	50u	500u	150A	1 0k			Si	DO4
105#	1S1630	1 0k	3 0	150C	90	10m		175J	1 3	15	25J		560m	175J	1.0k	1.5k		Si	S187a
106	3C100△	1 0k	3 0	150				190	1 1	6 0	25		50m	150	1.0k			Si	DO4△∅
107#	S15M3	1 0k%	3 0	150J	180			150J	1.2	3 0			500u		1.5k			Si△	A52d
108	JAN1N3649,R	1 0k	3 3	50C	25	8 3m		150C	2 2 †	10	25C	5 0u	20m	150C	800			Si	DO4∅
109	350R10B	1 0k	3 5	25	250			175	2 0	3 5	25	5 0u	50m	150	900			Si	
110	400R10B	1 0k	4 0	25	250			175	2 0	4 0	25	5 0u	50m	150	900			Si	

SYMBOLS AND CODES EXPLAINED IN INTERPRETER

5. RECTIFIERS

IN ORDER OF (1) PIV, (2) MAX AVG FWD CURRENT (3) TEMPERATURE, and (4) TYPE No.

LINE No.	4 TYPE No.	1 PIV (V)	MAX AVG FWD DC CURRENT 2 Io (A)	3 at TEMP (°C)	MAX RATINGS @ 25°C SURGE CUR PEAK 1 Cy (A)	PULSE WIDTH (s)	DISS. (W)	MAX TEMP (°C)	MAXIMUM FORWARD VOLTAGE DROP Vf (V)	at If (A)	at TEMP (°C)	MAX REVERSE CURRENT Ir @25°C & Vr (A)	Ir at T & Vr (A)	TEMP T (°C)	TEST VOLT Vr (V)	AVALANCHE RATINGS MAX V BKDN. (V)	MIN SLOPE (A/V)	DESCRIPTION MAT.	DWG No.
1#	G1104	1 0k	4 0	25A	100	10m	4 5	150A	1.2	4 0 †	25		3 0m	125C	1 0k			Si△	DO4
2#	P1104	1 0k	4 0	25A	100	10m	4 5	150A	1 2	4.0 †	25		3.0m	125C	1 0k			Si△	S95a
3♦#	SKA2.5/10	1 0k	4 0	25A	120	10m		150J	900m§	2 5	25J	20uØ			1 0k	1 7k		Si	S352b
4	4F10	1 0k	4 0	75	300	8 0m	3 0	175B	1 3	4 0	25	100u	500u	100	1 1k			Si△	F22
5#	SSiC1380	1 0k	4 0	120C	100	10m		150J	1 1	7 0	20J	1 0u			1 0k			Si△	S112b△
6	450R10B	1 0k	4 5	25	250			175	2 0	4 5	25	5 0u	50m	150	900			Si	
7	MR100#	1 0k	4 5	150B	70			185B	1 0	4 5	150B	20u△						Si△	DO4
8	500R10B	1 0k	5 0	25	250			175	2 0	5 0	25	5 0u	.50m	150	900			Si	
9	5BR10†	1 0k	5 00	30	35	8 0m		125C											M530
10	S5A10	1 0k	5 0	50A	300			150C	1 1	5 0	25A	1 0u			1 0k			Si	A1ez
11#	S20-10	1 0k	5 0	50	600	10m		150	1 1	60	25	50u		25	1 0k			Si	S19p
12	1N3919	1 0k	5 0	100A	100			200J	2.0	5 0	100A		50m	100C	1.0k			Si	DO4
13#	SJ1003E,K	1 0k†	5 0	100C	30		3 0	150A	1 0	75	25C	10u	30m	150C	1 0k			Si△	DO4⊠
14#	RAS508AF,BF	1 0k*	5 0	125B	100	10m	7 5	150J	1.2 △	6 0	25A	10u	.10m	150J	800	1 8k		Si△	DO4⊠
15	1N4459	1 0k†	5 0	150B	150			175B	1 5	5 0	150B		50m⊠	150B	1 0k			Si	DO4
16	407Z	1 0k	5 0	150C	125	8 3m		175J	1 1	5 0	25C		2 0m⊠	175J	1.0k			Si	DO4
17▼	SL10#	1 0k	5 0	150A	150			175C	1.1	5 0	25A	5 0u			1.0k			Si	DO4⊠
18	550R10B	1 0k	5 5	25	250			175	2 0	5 5	25	5 0u	50m	150	900			Si	
19	SCPH2	1 0k	5 5	55A	300			150A	2 0	3 0	25A	110u	200u	100A	1 0k			Si	M496
20	600R10B	1 0k	6 0	25	250			175	2 0	6 0	25	5 0u	50m	150	900			Si	
21#	G1106	1 0k	6 0	25A	140	10m	8 0	150A	1 2	6 0 †	25		3 0m	125C	1 0k			Si△	DO4
22#	P1106	1 0k	6 0	25A	140	10m	8 0	150A	1 2	6.0 †	25		3 0m	125C	1 0k			Si△	S95a
23	SLA1000†	1 0k	6 0	25				150A				1 0u	75u	100	1.0k				M545
24#	6NC12	1 0k	6 0	50A	200			150J	1 2	6 0	25A		1 3	150J	1.0k			Si	S19s
25#	50R2S	1 0k	6 0	75A	75 §	10m		150C	1 2	6 0	25C		1 0m	150C	1 0k	1 1kØ	3 3u	Si△	DO4⊠
26#	6F100	1 0k	6 0	100A	120 §	10m		190J	65	6 0	100B		2 5m	100B	1 0k			Si△	DO4⊠
27#	BYX39/1000	1 0k	6 0	125B	100	10m		175J	2 0	20	25J	150u		125	1.0k	1.8k		Si	DO4⊠
28#	S6-1003K	1.0k	6 0	125C	130	10m		150J	1 5	32	25A	20u	500u	150C	1 0k			Si△	DO4⊠
29#	S10AN6	1 0k%	6 0	125B	125		6 5	150J	470mØ	6 0 †			2 0m	125B				Si△	DO4⊠
30#	1S1627	1.0k	6 0	140C	150	10m		175J	1 35	30	25J		1 2m	175J	1.0k	1 5k		Si	S187a
31	1N2560	1 0k	6 0	150C$	150			150C	1 2	10	25C	4 0u	50m	150C	1 0k			Si△	DO10
32	1N2564	1 0k	6 0	150C$	150			150C	1 0	10	25C	1 0u	10m	150C	1 0k			Si△	DO10
33	1N2575	1.0k	6 0	150C$	150			150C	1 5	10	25C	10u	1 0m	150C	1 0k			Si△	DO10
34	1N3990	1.0k	6 0	150C	50			150	1 5				60mØ	150	1 0k			Si△	DO4
35	6A1000	1 0k	6 0	150C	150			200J	1 4 †	6 0	25C		60m	150C	1 0k			Si△	DO4
36	6C100	1 0k	6 0	150				190	1 2	12	25		50m	150	1.0k			Si	DO4△⊠
37	6F100A	1.0k	6 0	150C	50			190A	55	6 0	150		1 4m	150	1 0k			Si	A19j⊠
38	6F100B	1 0k	6 0	150C	160			200A	55	6 0	150		1.2m	150	1 0k			Si	S19j⊠
39	441Z	1 0k	6 0	150C$	150			150C	1 4				70m	150C	1 0k			Si	DO4
40	446Z	1.0k	6 0	150C$	150			150C	1 4				70m	150C	1 0k			Si	DO4
41	BY4002	1 0k	6 0	150C$	150			150C	1 2	6 0	25C	4 0u	50m	150C	1 0k			Si	S35
42	BY4102	1 0k	6 0	150C$	150			150C	1.0	6 0	25C	1 0u	10m	150C	1 0k			Si	S35
43	BY4202	1 0k	6 0	150C$	150			150C	1 5	6 0	25C	10u	1 0m	150C	1 0k			Si	S35
44	BY7002	1 0k	6 0	150C$	150			150C	1.2	6 0	25C	4 0u	50m	150C	1 0k			Si	DO4
45	BY7102	1 0k	6 0	150C$	150			150C	1.0	6 0	25C	1 0u	.10m	150C	1 0k			Si△	DO4
46	BY7202	1.0k	6 0	150C$	150			150C	1 5	6 0	25C	10u	1 0m	150C	1 0k			Si△	DO4
47	KR602VA	1 0k	6 0	150S$	75			175S	1 2	6 0	25		1 0m	150S	1 0k			Si	DO10
48	KS602VA	1.0k	6 0	150C$	75			175C	1.2	6 0	25		1.0m	150C	1 0k			Si	DO4
49	SL1000X	1.0k	6 0	150A	150			175C	1 2	6 0	25A	5 0u			1 0k			Si	DO4⊠
50	MS100	1 0k	7 5	150B	140			185B	1 0 △	7 5	150B	20u△						Si△	DO4
51#	ZAR210	1.0k	8 0	25	26 †			150A	1 5	5 0	25	5 0u	20m	100	1 0k	1 8k		Si△	S61
52#	1S930	1.0k	8 0	40A	430	10m		150J	1 05 △	20	25A		80m	150J	1 0k			Si△	S50
53▼#	8PT10$	1.0k	8 0	40A	250	10m		150J	2 0	8 0			5.0m	150	1 0k			Si	M588
54#	S5B100	1 0k	8 0	40A	430	10m		150J	1.05 △	20	25A		1 3m	25A	1 0k			Si△	S50
55#	S8-10F	1 0k	8 0	50	200	10m		150	1 1	8 0	25	50u			1 0k			Si	M389
56	PA100†	1 0k	8 0	55	300	8 3m		150	1.0	2 0	25	10u	100u	100	1 0k			Si	M542
57♦#	SiDA02P	1 0k	9 4	85C	110 §	10m		135J	1 05	3 0	25J	5 0u		25J	1 0k	1 7k		Si	A126b%
58	1N2262	1 0k	10	25$	200			150	60	10	25		5 0m	150	1 0k			Si△	DO4
59	1N2262A	1 0k	10	25$	200			150	60	10	25		500u	150	1 0k			Si△	DO4
60	1N2263	1 0k	10	25$	200			150	60	10	25		5 0m	150	1 0k			Si△	S35
61	1N2263A	1 0k	10	25C$	200			150	60	10	25		50m	150	1 0k			Si△	S35
62#	G1110	1.0k	10	25A	230	10m	17	150A	1 1	10 †	25		3 0m	125C	1 0k			Si△	DO4
63#	P1110	1 0k	10	25A	230	10m	17	150A	1.1	10 †	25		3.0m	125C	1 0k			Si△	S95a
64▼#	10PM10†	1.0k	10	40A	250	10m		150J	2.0	10			5 0m	150	1 0k			Si	M586
65#	70R2S	1 0k	10	75A	115 §	10m		150C	1 1	10	25C		1 0m	150C	1 0k	1 1kØ		Si△	DO4⊠
66	1N3924	1.0k	10	100C	100	8 3m		200C	2 0	10	100C		50m	100C	1 0k			Si	DO4
67	1N4440	1.0k†	10	100C	100 §			160A	1 2	10	100		1 0m⊠	100	1 0k			Si	M249
68#	1S545	1 0k	10	120B	200			175	1.6	50	25J		1 3m	175J	1 0k			Si△	S103
69#	SA10AN12	1 0k	10	120B	210			150J	470mØ	10			2 0m		1 0k			Si△	DO4⊠
70#	DK010	1 0k	10	125B$	130			125B	1.5	10	25		30m	125B	1 0k			Si△	S4c
71#	RAS508CF,DF	1 0k*	10	125B	200	10m	15	150J	1.2 △	12	25A	10u	10m	150J	800	1 8k		Si△	DO4⊠
72#	S10AN12	1 0k%	10	125B	210			150J	500mØ	9 5	25B		2 0m	125B				Si△	DO4⊠
73	408Z	1 0k	10	145C	175	8 3m		175J	1.2	10	25C		2 0m⊠	175J	1 0k			Si	DO4
74	SCPD4	1 0k	11	55A	300			150A	2 0	3 0	25A	110u	200u	100A	1 0k			Si	M496
75	SCPN4	1.0k	11	55A	300			150A	2.0	3 0	25A	110u	200u	100A	1 0k			Si	M496
76	SCPP4	1 0k	11	55A	300			150A	2.0	3 0	25A	110u	200u	100A	1 0k			Si	M496
77#	2WMT10	1 0k	11	100C	220 §	10m		125J	1.5	40	100C		7 0m	125J	1 0k			Si*	DO5
78▼	HEPR0138-RT	1 0k	12	25$	300			190†										Si	DO4
79♦#	SKA5/10	1.0k	12	45A	180	10m		150J	900m§	6 0	25J	30uØ			1 0k	1 7k		Si	S171r
80#	12NC11	1 0k	12	50A	300			150J	1.2	12	25A		2 4	150J	1 0k			Si	S19n
81#	8AN100	1 0k	12	55A	210	10m		140B	65 Ø	13	25A		10m	120J	1 0k			Si	S4q⊠#
82♦	A129P	1 0k	12	64	150	8 3m		125	1.55	12	64		6 0m	125	1.0k			Si	DO4
83#	12F100	1.0k	12	100A	150 §	10m		190J	65	12	100B		2 5m	100B	1 0k			Si△	DO4⊠
84#	1S1578	1 0k	12	120C	200			150J	1 2	12	25A		2.4m	150J	1 0k			Si	S19n
85▼#	SR10A20	1 0k	12	120C	200 §	8 3m		150J	1.52	35	25C		3 0m	150J	1 0k			Si△	S19t
86#	SR10D20	1 0k	12	120C	200	8 3m		150	1.3	20			3 0mØ	150J	1 0k			Si	S19c
87#	BYX40-1000	1.0k$	12	125B	200	10m		175	2.5	50	25		300u	125	1 0k	2 0k		Si	DO4⊠
88	1N4510	1 0k	12	135C	240		10	175C	1.4	12			1 7	135C	1 0k	1 2k		Si	DO4
89#	12NF11	1.0k	12	138C	240	10m		175J	1.5	50	25J		1 7	175J	1 0k	1 5k	1 2k	Si	S4k
90	1N2586	1 0k	12	150C$	250			150C	1 2	20	25C	8 0u	1 0m	150C	1 0k			Si	DO10
91	1N2597	1 0k⊠	12	150C	250			150C	1 0	12		2 0u	20m	150C	1 0k			Si△	DO10
92	1N2608	1 0k	12	150C$	250			150C	1.5	20	25C	20u	2 0m	150C	1 0k			Si△	DO10
93	1N3673	1 0k	12	150C	200													Si△	DO4
94	1N3673A	1 0k	12	150C$	240			200C	1 35				90mØ	150C	1 0k			Si	DO4⊠
95	JAN1N3673A	1 0k$	12	150C	240	8 3m		200C	1.35	38	25	50u	1 0m	150	1 0k			Si	DO4⊠
96	1N4015	1 0k	12	150C	200			175A	1.3	12	150A	10u	50m	150A	1 0k			Si	DO4
97	12A1000	1 0k	12	150C	240			200J	1.35 †	12	25C		60m	150C	1 0k			Si△	DO4
98	12C100	1 0k	12	150				190	1 5	24	25C		1 0m	150	50			Si	DO4△⊠
99	12F100B	1 0k	12	150C	250			200A	.55	12	150		1 0m	150	1 0k			Si	A19j⊠
100	404Z	1 0k	12	150C$	240			150C	1.35				.90mØ	150C	1 0k			Si	DO4
101	437Z	1 0k	12	150C$	240			150C	1.35				90mØ	150C	1 0k			Si	DO4
102	BY5002	1 0k	12	150C$	250			150C	1.2	12	25C	8.0u	1 0m	150C	1.0k			Si	S35
103	BY5102	1 0k	12	150C$	250			150C	1 0	12	25C	2 0u	.20m	150C	1 0k			Si	S35
104	BY5202	1 0k	12	150C$	250			150C	1.5	12	25C	20u	2 0m	150C	1 0k			Si	S35
105	BY8002	1 0k	12	150C$	250			150C	1.2	12	25C	8 0u	1 0m	150C	1 0k			Si△	DO4
106	BY8102	1 0k	12	150C$	250			150C	1 0	12	25C	2 0u	.20m	150C	1 0k			Si△	DO4
107	BY8202	1 0k	12	150C$	250			150C	1 5	12	25C	20u	2 0m	150C	1 0k			Si△	DO4
108	MR1130	1.0k	12	150C	300 §			190J	1 0	12	25C	500u			1 0k			Si△	DO4
109	SL1000	1 0k	12	150A	250			150C	1 3	12	25A	5 0u	1 0m	150A	1 0k			Si	DO4⊠
110	TR1130	1 0k	12	150C	300 §			190J	1 2	12	25C	50u	40mØ	150C	1 0k			Si	DO4

SYMBOLS AND CODES EXPLAINED IN INTERPRETER

5. RECTIFIERS

IN ORDER OF (1) PIV, (2) MAX AVG FWD CURRENT (3) TEMPERATURE, and (4) TYPE No.

LINE No	4 TYPE No.	1 PIV (V)	MAX AVG FWD DC CURRENT 2 Io (A)	3 at TEMP (°C)	MAX RATINGS @ 25°C SURGE CUR. PEAK 1 Cy (A)	PULSE WIDTH (s)	DISS. (W)	MAX. TEMP (°C)	MAXIMUM FORWARD VOLTAGE DROP Vf (V)	at If (A)	at TEMP (°C)	MAX. REVERSE CURRENT Ir @25°C & Vr (A)	Ir at T & Vr (A)	TEMP T (°C)	TEST VOLT Vr (V)	AVALANCHE RATINGS MAX V BKDN. (V)	MIN SLOPE (A/V)	MAT.	DESCRIPTION DWG. No.
1	UR123VA	1 0k	12	150S$	240			175S	1.2	12	25		3 0m	150S	1.0k			Si	DO10
2	US123VA	1.0k	12	150C$	240			175C	1 2	12	25		3.0m	150C	1.0k			Si	DO4
3	MT100△	1 0k	14	150B	240			185B	1 0 △	14	150B	100u△						Si△	DO4
4▼#	15PT10$	1 0k	15	40A	250	10m		150J	2 0	15			5.0m	150	1.0k			Si	M589
5	15GS10	1 0k	15	75C	150	8 3m		150J	1 5	32	25A	20u	500u	150C	1 0k			Si△	DO4⊘
6#	5M100	1 0k	15	79B	300	10m		130A	1 3 †	50	130J		5 0m		1.0k			Si	S193a
7#	RN1115	1 0k	15	100C	350	10m	25	125C	1 2	15 †	25		3 0m	125C	1.0k			Si△	DO5
8#	S10AN15	1 0k	15	120B	220			150J	490m∅	15			3 0m		1.0k			Si△	S324⊘
9#	S10BN15	1 0k	15	120B	220			150J	490m∅	15			3.0m		1 0k			Si△	S320⊘
10	368Z	1 0k	15	125C	240			180J	1 3	15	25C		2.0m⊘	130C	1.0k			Si	DO4
11	409Z	1 0k	15	125C	250	8 3m		175J	1.3	15	25C		2.0m⊘	175J	1 0k			Si	DO4
12#	16F100	1 0k	16	100B	350	10m	17	190	55	16	100		1 0m	175	1.0k			Si	DO4
13	1N3624	1 0k	16	155B$	300			175B					.60m	175B	1.0k			Si△	DO4
14#	SK1003K	1 0k	17 5	85C	230	10m		150J	1 4	50	25A	20u	500u	150C	1.0k			Si△	DO4⊘
15#	S10BR8	1 0k%	18	120B	188		18	140B	.60 ∅	18	25		10m	125	1 0k			Si	S122a
16	1N2280	1 0k	20	25$	400			150	600m	20	25		1.0m	150	1 0k			Si△	DO4
17#	30R2	1 0k	20	25A	250 §	10m	25	150J	50	20	25J		1 0m	150J	1.0k			Si	DO5⊘
18#	30R2S	1 0k	20	25A	250 §	10m	25	150C	.50	20	25C		1.0m	150C	1.0k	1.1k∅		Si	DO5⊘
19#	1S935	1 0k	20	40A	1.1k	10m		150J	1 05 △	40	25A		2.0m	150J	1 0k			Si△	S51
20▼#	20PM10†	1 0k	20	40A	250	10m		150J	2.0	20			5.0m	150	1.0k			Si	M587
21#	S8B100	1.0k	20	40A	100	10m		150J	1 05 △	40	25A		2 0m	25A	1 0k			Si△	S51
22#	S20-10F	1.0k	20	50	600	10m		150	1 1	60	25	10u		25	1 0k			Si	S19p
23#	SSIE2060	1 0k	20	85C	250	10m		160J										Si△	S4p△
24#	BYX13/1000	1 0k	20	100C	600	10m	35	150J	2 0	100	25C		1 7m	125C	500			Si	S72c⊘
25#	1S547	1 0k	20	120B	400			175	1.6	100	25J		3 5m	175J	1.0k			Si△	S102
26#	S10AN20	1 0k	20	120B	250			150J	480m∅	20			3.0m		1.0k			Si△	S324⊘
27#	S10BN20	1 0k	20	120B	250			150J	480m∅	20			3.0m		1.0k			Si△	S320⊘
28#	BYX25/1000	1 0k	20	125B	360	10m		175J	1.8	50	25		.60m	125J	1.0k	1.6k		Si	Z19⊘
29	DS203VA	1.0k	20	150C$	650			175C	1.1	20	25		5 0m	150C	1 0k			Si	DO5
30#	3WM10	1 0k	21	100C	220 §	10m		125J	1 4	60	100C		14m	125J	1 0k			Si*	S8
31#	25NC12	1 0k	25	50A	600			150J	1 2	25	25A		6.0	150J	1.0k			Si	S19n
32	PB100†	1 0k	25	55	300	8 3m		150	1.0	3.0	25	10u	100u	100	1.0k			Si	M542
33	PBU100†	1.0k	25	55	300	8.3m		150	1.0	3.0	25	10u	100u	100	1.0k			Si	M542a
34▼	S25A100	1 0k	25	55	300	8 3		150	1 0	3.0	25	10u	10u	100	50			Si	M542
35▼	A139P	1.0k	25	75	400	8.3m		125	1 85	25	75		6.0m	125	1.0k			Si	DO5
36#	1S1844	1 0k	25	110C	300			150J	1 2	25	25A		6.0	150J	1.0k			Si	S19n
37#	1S1418	1 0k	25	135C	500	10m		175J	1 38	100	25J		2.5m	175J	1 0k	1.5k		Si	S4k
38	25C100	1 0k	25	140				190J	1 0	25	25C		20m	25	700			Si	DO5△⊘
39	25F100	1 0k	25	140				190J	1.0	25	25C		20m	25	1.0k			Si	M56△⊘
40	PBT100$	1 0k	27 5	55	300	8 3m		150	1 0	3.0	25	10u	100u	100	1.0k			Si	M543
41▼#	30PT10$	1 0k	30	40A	250	10m		150J	2 0	30			5.0m	150	1.0k			Si	M590
42	PBC100	1 0k	30	55C	300			150C	1.0	3.0	25C	10u	100u	100C	1.0k			Si	M447⊘
43	PZ140K	1 0k†	30	100C	400			175C	.70 ∅	2.0	25C		2.0m⊘	150C	1.0k	1.4k		Si	DO21⊘
44#	3C10	1 0k	30	110C	500	10m		150J	1 5	30	40A		3.0m	25	1.0k			Si*	S181
45#	S10AN31	1 0k	30	120B	347			150J	600m∅	30			4.0m		1.0k			Si△	S325⊘
46#	S10BN31	1 0k	30	120B	347			150J	600m∅	30			4 0m		1 0k			Si△	S321⊘
47	DS303VA	1.0k	30	150C$	850			175C	1.1	30	25		5.0m	150C	1 0k			Si	DO5
48#	15AN100	1 0k	34	20A	500	10m		140B	700m∅	25	25A		20m	120J	1.0k			Si	S241a⊘#
49	1N2287	1 0k	35	25$	400			150	60	35	25		5 0m	150	1.0k			Si△	DO5
50#	SR30B20	1 0k	35	100C	600	8 3m		150	1 3	50			10m∅	150J	1.0k			Si	S19d
51	1N4529	1 0k	35	115C	500		20	175C	1.4	35			2.5m	115C	1.0k	1 2k		Si	DO5
52	1N3768	1 0k	35	130C$	400			190B	1.8				5.0m	140B	1 0k			Si	DO5
53	35C100△	1 0k	35	140	900			190J	1 1	50	25		20m	25	900			Si	DO5△
54	35F100	1 0k	35	140	900			190J	1 1	50	25C		20m	25C	1.0k			Si	M56△⊘
55#	40R2S	1 0k	35	140C	500 §	10m		200J	1 3	35	25C		10m	150C	1.0k	1 1k∅		Si△	DO5⊘
56#	RN1135	1.0k	35	140C	500	10m		175C	1 5	110	25C		20m	150C	1.0k			Si△	DO5
57#	SUT1001K	1.0k	36	85C	600	10m		150J	1.6	90	25A	200u	3.0m	150C	1.0k			Si△	DO5⊘
58#	1S940⊘	1.0k	40	40A	2 7k	10m		150J	1 05	100	25A		4.0m	150J	1.0k			Si△	#
59	S12C100	1 0k	40	40A	2 7k	10m		150J	1.05	100	25		4 0m	25A	1.0k			Si△	#
60#	K1140	1 0k	40	90C	800	10m		125C	1 2	125	25C		4.0m	125C	1.0k			Si△	S245
61#	6WM10	1 0k	40	100C	650 §	10m		125J	1 4	110	100C		14m	125J	1.0k			Si*	S8
62#	10M100	1 0k	40	104B	800	10m		130A	1.2 †	120	130J		10m		1.0k			Si	S4s
63▼#	4C10	1.0k	40	110C	700	10m		150S	1 5	40	40A	3.0m	12m	150	1.0k			Si*	S181
64#	S10AN40	1 0k	40	120B	485			150J	500m∅	40			4 0m		1 0k			Si△	S325⊘
65#	S10BN40	1 0k	40	120B	485			150J	500m∅	40			4.0m		1 0k			Si△	S321⊘
66	40HF100	1 0k	40	140C	500 §	8.3m		180J	1 3	40 †	140C		7 0m⊘	140C	1.0k			Si△	S21e⊘
67#	25AN100	1.0k	45	20A	700	10m		140B	700m∅	40	25A		20m	120J	1 0k			Si	S241a⊘#
68#	BYX56-1000	1 0k	47	115B	800	10m		175J	1 8	150	25J		1.6m	125J	1 0k	2 0k		Si	DO5⊘
69	SLEA10†	1 0k	50		150	16m			1.0	3 0	25	5.0u	100u	100	1.0k			Si	M546
70#	SSIF2060	1 0k	50	85C	500	10m		160J										Si△	S72m△
71#	SSIF2060A	1 0k	50	85C	500	10m		160J								1 8k		Si△	S52c△
72#	SL1003A,K	1 0k†	50	100C	150		10	150C	1.2	10	25C	50u	1.5m	150C	1.0k			Si△	DO4⊘
73#	1S1615	1.0k	50	130C	2.0k	10m		175J	1.35	200	25J		10m	175J	1.0k	1.5k		Si	S168b
74	50C100	1 0k	50	140	400	1	55	190J	1 1	50	25		20m	150	50			Si	DO5△⊘
75	1N1691	1 0k	50	150C	700	8.3m		165C	1.2	1.1	150C		25m	150C	1 1k			Si	S8q
76	1164K	1 0k	50	150	1 0k	8 3m		200J	1 2	40	25C		2.0m⊘	175J	1 0k	1.4k		Si	DO5
77#	S500-10	1 0k	55	50	3.7k	20m		120	1.2	500	50	1.0m			1.0k			Si	M189
78#	S10AN55	1.0k	55	125B	935			150J	500m∅	55			6 0m		1.0k			Si△	⊘
79#	S10BN55	1 0k	55	125B	935			150J	500m∅	55			6.0m		1.0k			Si△	S322⊘
80#	S10GN55	1.0k	55	125B	935			150J	500m∅	55			6 0m		1.0k			Si△	S322⊘
81#	SB1001K	1 0k	60	85C	700	10m		150J	1.7	210	25A	200u	3.0m	150C	1.0k			Si△	S168a⊘
82#	SBT1001K	1 0k	60	85C	700	10m		150J	1.7	210	25A	200u	3.0m	150C	1 0k			Si△	S168a⊘
83#	KS1160	1 0k	60	110C	1.5k	10m	67	150C	1 2	60 †	25		5.0m	125C	1.0k			Si△	S245
84#	25G100	1 0k	60	112B	850 §	10m	60	190B	.55 ∅	25	25A							Si*	DO5⊘
85#	20M100	1 0k	60	126B	1.0k	10m		175A	1 5 †	180	175J		10m		1.0k			Si	S4t
86#	45AR100	1.0k	70	25A	1.1k	10m		140B	.70 ∅	90	25A		25m	120J	1 0k			Si	S8j#
87	402Z	1.0k	70	110C	1.0k	8.0m		200J	1.15	40	25C		1.0m	150C	1.0k			Si	DO5
88	435Z	1 0k	70	110C	1 0k	8.0m		200J	1 15	40	25C		1.0m	150C	1.0k			Si	DO5
89#	SR70C20	1 0k	70	119C	1 5k§	8 3m		150J	1 6	220	25C		30m	150J	1.0k			Si△	S333
90#	S10AN71	1 0k	70	120B	1 2k			150J	470m∅	70			6.0m		1 0k			Si△	⊘
91#	S10BN71	1 0k	70	120B	1 2k			150J	470m∅	70			6.0m		1 0k			Si△	S323⊘
92#	S10GN71	1 0k	70	120B	1 2k			150J	470m∅	70			6.0m		1.0k			Si△	S322⊘
93	70H100	1 0k	70	125C	1 2k§	8 3m		200J	1.3	70 †	125C		5m⊘	125C	1.0k			Si*	DO5⊘
94	70H100A	1.0k†	70	125C	1.2k§	8 3m		200J	1.3	70	125C		5m⊘	125C	1 0k			Si△	DO5⊘
95#	30R4	1 0k	75	20A			200	175J	1.2 ∅	160	25B		80m∅	150J	1 0k			Si	
96#	10WM10	1 0k	75	100C	1 0k§	10m		125J	1 5	200	100C		20m	125J	1.0k			Si*	M43a
97	75E100	1 0k	75	150C	850	4.0m		190J	1 0	90	25C		40m	25C	1 0k			Si	S83a△⊘
98	75F100	1 0k	75	150C	850	4 0m		190J	1 0	90	25C		40m	25C	1 0k			Si	M56a△⊘
99#	1S945	1 0k	80	40A	5 4k	10m		150J	1.05	200	25A		8.0m	150J	1 0k			Si△	M26#
100#	S16B100	1 0k	80	40A	5 4k	10m		120J	1.05 △	200	25A		8.0m	25A	1 0k			Si△	M26
101#	8C10	1 0k†	80	100J	1 2k		100	150J	1.3	80	100C		5.0m∅	25J	1.0k			Si*	S110a
102#	70BN100	1 0k	100	40A	1 8k	10m		140B	.70 ∅	130	25A		30m	120J	1.0k			Si	S8k⊘#
103	FS503VA	1 0k	100	80C	950			175C	1 1	50	25		10m	150C	800			Si	DO8
104	JAN1N3643	1 0k$	100	100	14	8 0m		175S	5 0	25	25	5.0u	.10m	100	1.0k			Si	Z55
105#	10C10⊘	1 0k†	100	100J	1 5k		120	150J	1.2	100	100C		5.0m∅	25J	1.0k			Si*	S110a
106#	1S440R	1 0k	100	105B	1 6k			175J	1 6	500	25J		6 0m	175J	1.0k			Si△	S12f
107	1N3295	1 0k	100	130C	1 6k	8.3m		200C	1.5	100	130C		11m	130B	1 0k			Si	DO8
108	1N3295A	1 0k	100	130C	2 3k			200C	1 25	100	130C		11m	130C	1.0k			Si	DO8
109	1N3295R	1 0k	100	130B	1 6k			200A	900m	100	200J		8.0	200J	1 0k			Si	DO8
110	A70P	1 0k	100	130B	1 6k	8 3m		200J	600m∅	100	130B		4.5m	130B	1 0k			Si	DO8

SYMBOLS AND CODES EXPLAINED IN INTERPRETER

5. RECTIFIERS

IN ORDER OF (1) PIV, (2) MAX AVG FWD CURRENT (3) TEMPERATURE, and (4) TYPE No.

LINE No.	4 TYPE No.	1 PIV (V)	MAX AVG FWD DC CURRENT 2 Io (A)	3 at TEMP (°C)	MAX RATINGS @ 25°C SURGE CUR. PEAK 1 Cy (A)	PULSE WIDTH (s)	DISS. (W)	MAX. TEMP (°C)	MAXIMUM FORWARD VOLTAGE DROP Vf (V)	at If (A)	at TEMP (°C)	MAX. REVERSE CURRENT Ir @25°C & Vr (A)	Ir at T & Vr (A)	TEMP T (°C)	TEST VOLT Vr (V)	AVALANCHE RATINGS MAX V BKDN. (V)	MIN SLOPE (A/V)	MAT.	DESCRIPTION DWG. No.
1	A71P	1.0k	100	130B	1.6k	8.3m		200J	600mØ	100	130B		4.5m	130B	1.0k			Si	DO8
2	100E100	1 0k	100	150C	2.0k	4.0m		190J	1.0	140	25C		40m	25C	1 0k			Si	S83A⊘
3	100F100	1 0k	100	150C	2.0k	4.0m		190J	1.0	140	25C		40m	25C	1.0k			Si	M56aA⊘
4	150L100A	1.0k†	100	150C	3.0k§	8.3m		200J	1.2	150 †	150C		7m⊘	150C	1.0k			Si*	DO30⊘
5#	AS10	1 0k	100	150	4 0k	20m		150										Si	
6#	S200-10F	1.0k	110	50	4.0k	10m		150	1.3	600	25	20m			1.0k			Si	M189a
7#	S12P1000E	1 0k	110	75C	2 0k	10m		175J	1.35	300	25A	1 0m	15m	175C	1 0k			SiA	F56m
8#	S10N1000E3	1.0k	125	100C			160	150	.97	125	100C	6 0m	20m	100C	1.0k			Si	F56m
9#	S10N1000E4	1.0k	125	100C			160	150	1.03	125	100C	6.0m	20m	100C	1.0k			Si	F56m
10#	S10N1000E5	1.0k	125	100C			160	150	1.08	125	100C	6.0m	20m	100C	1 0k			Si	F56m
11#	125BN100	1.0k	130	20A	3 0k	10m		140B	700mØ	180	25A		40m	120J	1.0k			Si	S120a⊘#
12#	BYX32/1000	1.0k†	130	135C	1.6k			190J	1 7	500	190J		10m	175J	1.0k			SiA	S203b⊘
13	FS703VA	1.0k	150	75C	1.2k			175C	1 1	70	150C		10m	150C	1.0k			Si	DO8
14#	S11P1000E	1.0k	150	75C	2 2k	10m		175J	1.35	300	25A	1.0m	15m	175C	1 0k			SiA	F56m
15#	SD1003K	1 0k	150	75C	2.2k	10m		175J	1.35	300	25A	1.0m	15m	175C	1.0k			SiA	⊘
16♦#	15C10	1.0k	150	90C	2.0k	10m		150S	1 5	150	40A	6.0m	30m	150	1 0k			Si	S12j
17#	1N3092	1.0k	150	100C	3.0k§			200C	1.2	150	150C		12m	150C	1.0k			Si	DO30
18♦#	BYX23/1000	1.0k	150	100A	1.6k§	10m	30	190J	1.6	500	25J		15m	175J	1.0k			SiA	S128
19	1N4594	1.0k	150	110	3.0k			200A	1.4	150	110		14m	200	1.0k			Si	DO8⊘
20#	S10PN125	1.0k%	150	110B	3.3k			150J	1.1	150			30m		1.0k			Si*	S319⊘
21#	S10BR125	1.0k%	150	115B	3.3k			150J	1.1	150			40m		1 0k			Si*	F19
22#	45M100	1 0k	150	116B	3 0k	10m		175A	1.5 †	500	175J		20m		1.0k			Si	S8m
23#	SU1001A,K	1.0k†	150	120C	600		30	150C	1.2	30	25C	200u	2 0m	150C	1.0k			SiA	S168a⊘
24#	BYX14/1000	1.0k	150	125C	3.0k	10m	240	190J	1 8	750	25		15m	175C	500			Si	M294⊘
25#	S10KN125	1.0k%	150	125B	3 3k			150J	1 1	150			30m		1.0k			Si*	F80⊘
26#	S10LN125	1.0k%	150	125B	3.3k			150J	1.1	150			30m		1 0k			Si*	M521⊘
27	150K100A	1.0k†	150	150C	3.0k§	8.3m		200J	1 2	150 †	150C		7m⊘	150C	1.0k			Si*	DO8⊘
28#	SSiK2160	1.0k	160	92C	2 7k	10m		160J	1 3	500	20J	200u	2.0m	150J	300			SiA*	S72mA
29#	SSiK2160A	1 0k	160	92C	2.7k	10m		160J	1.3	500	20J	200u	2 0m	150J	300	1.1kØ		SiA*	S72mA
30#	ST4	1 0k	160	110C	3.8k	10m	190	150C	1.3	160 †	25		4.0m	125C	1 0k			SiA	S245a
31	1N3273	1.0k†	160	125C	2.0k			190J	1 25	160	125C		12m	125C	1.0k			Si	DO9⊘
32	160E100	1 0k	160	150C	5 0k	4 0m		190J	1.0	160	25C		40m	25C	1.0k			Si	S83A⊘
33	160F100	1 0k	160	150C	5.0k	4.0m		190J	1.0	160	25C		40m	25C	1.0k			Si	M56aA⊘
34	175E100	1.0k	175	150C	5 0k	4.0m		190J	1.0	175	25C		40m	25C	1 0k			Si	S83A⊘
35	175F100	1.0k	175	150C	5.0k	4 0m		190J	1.0	175	25C		40m	25C	1.0k			Si	M56aA⊘
36#	200BN100	1.0k	180	20A	7.5k	10m		140B	700mØ	240	25A		40m	120J	1.0k			Si	S120a⊘#
37#	S13N1000E	1 0k	190	75C	2 5k	10m		175J	1.35	300	25A	1 0m	15m	175C	1.0k			SiA	F56m
38#	S20P1000JA	1 0k	200	100C	4.0k	10m		175J	1.25	600	25A		30m	175C	1.0k			SiA	
39#	T24A	1 0k	200	110C	3 8k	10m	240	150C	1.3	200 †	25		4 0m	125C	1 0k			SiA	S246
40#	S10BN200	1 0k%	200	120B	4 0k		250	150B	.60 Ø	190	25B		40m	125C	1.0k			Si	F19a
41	411Z	1.0k	200	130	3 0k	8 3m		200J	1 5	125	130C		8.0m⊘	130C	1 0k			Si	DO8
42#	SSiK0460	1 0k	210	110C	2.7k	10m		150J	1 3	500	20J	200u	2.0m	150J	300			SiA*	M444#
43#	20C10A	1.0k	220	100C$	3 3k	10m		150	1.2	220	25		5 0m	25	1.0k			Si	S184
44#	SR200P20	1.0k	240	75C	5.0k§	8.3m		150J	1.73	750	25C		30m	150J	1 0k			SiA	S298⊘
45	1N3174	1.0k	240	105C	3.0k	8.3m		175C	1 9	240	105C		16m	105C	1.0k			Si	DO9
46	1N3174A	1.0k*	240	120C	3.0k			190J	1.25	240	25C		16m	125C	1 0k			Si	S14e
47	240E100	1.0k	240	150C	7.5k	4.0m		190J	1 0	240	25C		50m	25C	1.0k			Si	S83A⊘
48	240F100	1 0k	240	150C	7 5k	4.0m		190J	1.0	240	25C		50m	25C	1 0k			Si	M56aA⊘
49#	BYX27/1000	1 0k	250		4 0k	10m	80k	190J	1.8	1.2k	190J		25m	175J	1 0k	1 6k		Si	M105
50	A96P	1.0k	250	70C	3 3k	8 3m		125J	1.25	250	25		10m	70C	1 0k			Si	S120b
51	A97P	1 0k	250	70C	3 3k	8.3m		125J	1 25	250	25J		10m	70C	1 0k			Si	S120b
52♦#	25C10	1 0k	250	90C	4 0k	10m		150S	1.5	250	90C	8.0m	45m	150	400			Si	S184
53#	1N2068	1.0k	250	100	4.5k§			200C	1.3 †	250	135C		12m	135	800			Si	DO9
54	DRS251	1.0k	250	100C$	4.5k	8 3m		175J	.55	250	110	2 0m	10m	175J	1.0k			Si	S210a⊘
55#	1S740R	1 0k	250	105B	4.5k			175J	1 45	1.0k	25J		30m	175J	1.5k			SiA	S12g
56▼#	1S2256	1 0k	250	111C	5 0k§	8.3m		150J	1 75	780	25C		30m	150J	1 0k			SiA	M567
57#	FD250A20	1.0k	250	111C	5 0k§	8.3m		150J	1 75	780	25C		30m	150J	1.0k			SiA	M567
58#	BYX33/1000	1.0k	250	120A	4 0k	10m		190J	1 8	1 2k	190J		25m	175J	1.0k			SiA	M294⊘
59	1N3742	1.0k	250	130C	4 5k	8.3m		200C	1.1 A	250	130C		7 0m	130B	1.0k			Si	DO9⊘
60	A90P	1.0k	250	130B	4 5k	8.3m		200J	400mØ	250	130B		7.0m	130B	1.0k			Si	DO9
61	A91P	1.0k	250	130B	4 5k	8.3m		200J	400mØ	250	130B		7.0m	130B	1 0k			Si	DO9
62	1N4056	1.0k	275	120C	5 0k			190J	1 35	275	120C		15m	120C	1 0k			Si	DO9⊘
63	275E100	1.0k	275	150C	7 5k	4.0m		190J	1.0	275	25C		50m	25C	1 0k			Si	S83A⊘
64	275F100	1.0k	275	150C	7 5k	4.0m		190J	1.0	275	25C		50m	25C	1.0k			Si	M56aA⊘
65#	S20N1300JA	1.0k	285	70C	4.5k	10m		150J	1.25	600	25A	5.0m	30m	150C	1.0k			SiA	M378⊘
66#	S10EN270	1.0k%	290	125B	1 5k	20m		160B†	.975	340			50m	125B	1.0k			Si*	M307
67#	S10FN270	1.0k%	290	125B	1 5k	20m		160B†	975	340			50m	125B	1.0k			Si*	M357c
68#	S10GN270	1.0k%	290	125B	1 5k	20m		160B†	975	340			50m	125B	1.0k			Si*	M357a
69♦#	S10HN270	1.0k%	290	125B	7 2k	10m		160B†	975m	340			50m	125B	1.0k			Si*	M366a
70♦#	S11HN270	1.0k%	290	125B	7 2k	10m		160B†	975m	340			50m	125B	1.1k			Si*	M366a
71#	40C10	1.0k	300	100C	5 0k	10m		150J		400			10m	25J				Si*	M366
72	S10EN301	1.0k	300	100B	5 1k	10m	410	100B	.65 Ø	300	100B		35m	100B	1 0k			Si	M307
73	S10FN301	1.0k	300	100B	5 1k	10m	410	100B	65 Ø	300	100B		35m	100B	1.0k			Si	M248
74	S10GN301	1.0k	300	100B	5 1k	10m	410	100B	.65 Ø	300	100B		35m	100B	1.0k			Si	M248a
75	S10HN301	1.0k	300	100B	5.1k	10m	410	100B	65 Ø	300	100B		35m	100B	1.0k			Si	M370
76#	TA3010R	1.0k	300	100C	6 0k	10m			1.4	1.0k			15m	150C	1.0k				S316
77#	T34	1.0k	300	105C	5.0k	10m	350	150C	1.3	300 †	25		4.0m	125C	1.0k			SiA	S246
78▼#	YSD212P10K38	1.0k	300	105B	6.6k	10m		185J	1.21	1 0k	150J		24m	185J	1.0k			Si	S365
79	300U100A	1.0k†	300	120C	5.0k§	8 3m		200J	1 4	300 †	120C		7m⊘	120C	1.0k			Si*	DO9⊘
80#	30C10	1.0k	300	150	4.5k							810m	4.5	150	1.5				
81#	S10EN290	1.0k%	310	125B	1.6k	20m		160B†	.975	340			50m	125B	1.0k			Si*	M307
82#	S10FN290	1 0k%	310	125B	1.6k	20m		160B†	.975	340			50m	125B	1.0k			Si*	M357c
83#	S10GN290	1 0k%	310	125B	1.6k	20m		160B†	975	340			50m	125B	1.0k			Si*	M357a
84♦#	S10HN290	1.0k%	310	125B	7.2k	10m		160B†	975m	340			50m	125B	1.0k			Si*	M366a
85#	S30N1100JA3	1 0k	320	100C	4.8k	10m		175J	1.15	600	25A	2 0m	30m	175C	1.0k			SiA	M378
86#	S30N1100JA4	1 0k	320	100C	4 8k	10m		175J	1.25	600	25A	2 0m	30m	175C	1 0k			SiA	M378
87#	S10EN310	1.0k%	330	125B	1.7k	20m		160B†	.975	340			50m	125B	1.0k			Si*	M307
88#	S10FN310	1.0k%	330	125B	1.7k	20m		160B†	.975	340			50m	125B	1.0k			Si*	M357c
89#	S10GN310	1.0k%	330	125B	1.7k	20m		160B†	.975	340			50m	125B	1 0k			Si*	M357a
90#	S10HN310	1.0k%	330	125B	1 7k	20m		160B†	.975	340			50m	125B	1 0k			Si*	M366a
91#	S10EN300	1 0k%	340	125B	2 0k	20m		160B	900m	340			50m	125	1 0k			Si*	M307
92▼#	S10HN300	1 0k%	340	125B	7.2k	10m		160B	900m	340			50m	125	1.0k			Si*	M307
93#	300ND11	1.0k	350	90B	6.5k	10m		150J	1.42	1k	25A		20m	150J	1 0k			Si	S12b
94#	S10EN350	1 0k%	370	125B	2 0k	20m		160B†	.975	340			50m	125B	1.0k			Si*	M307
95#	S10FN350	1 0k%	370	125B	2 0k	20m		160B†	975	340			50m	125B	1 0k			Si*	M357c
96#	S10GN350	1.0k%	370	125B	2 0k	20m		160B†	.975	340			50m	125B	1 0k			Si*	M357a
97♦#	S10HN350	1.0k%	370	125B	7.8k	10m		160B†	900m	400			50m	125B	1 0k			Si*	M366a
98	A396P	1.0k	400	70C	3 3k	8 3m		125C	1.3 Ø	400	25		10m	70C	1 0k			Si	M377a
99#	SSiN2060	1.0k	400	90C	8 0k	10m		160J				200u			1.0k			SiA	S12a#
100#	SR400C20	1.0k	400	100C	10k§	8 3m		150J	1.40	1.2k	25C		30m	150J	1.0k			SiA	S310
101#	300ND11A	1 0k	400	132B	6.0k	10m		200J	1 42	1.0k	25A		30m	200J	1.0k			Si	S12b
102	A390P	1 0k	400	145	4 5k			200J	.40	400	130C		8.0m	130C	1 0k			SiA	M377a
103	400E100	1 0k	400	150C	12k	4.0m		190J	1 1	450	25C		75m	25C	1 0k			Si	S83aA⊘
104	400F100	1 0k	400	150C	12k	4 0m		190J	1 1	450	25C		75m	25C	1 0k			Si	M56bA⊘
105▼#	YSD211P10K38	1 0k	410	105B	6 6k	10m		185J	1 21	1.0k	150J		24m	185J	1.0k			Si	S365
106	CH1511	1 0k	420	120C	6 0k	8.3m		200S	1.3	420	140C		10m	120C	1.0k	1 2k		Si	DO9⊘
107	450E100	1 0k	450	150C	12k	4 0m		190J	1 1	450	25C		75m	25C	1 0k			Si	S83aA⊘
108	450F100	1 0k	450	150C	12k	4.0m		190J	1.1	450	25C		75m	25C	1 0k			Si	M56bA⊘
109	783Z	1 0k	485	130C	5 0k	8.3m		190J	1.9	400	130C		10m⊘	130C	1.0k			Si	
110#	S10GR311	1 0k	490	100B	7 5k			175J	670mØ	490			25m		1 0k			SiA	M522

SYMBOLS AND CODES EXPLAINED IN INTERPRETER

5. RECTIFIERS

IN ORDER OF (1) PIV, (2) MAX AVG FWD CURRENT (3) TEMPERATURE, and (4) TYPE No.

LINE No.	TYPE No [4]	PIV [1] (V)	MAX AVG FWD DC CURRENT Io [2] (A)	at TEMP [3] (°C)	MAX RATINGS @ 25°C SURGE CUR. PEAK 1 Cy (A)	PULSE WIDTH (s)	DISS. (W)	MAX. TEMP (°C)	MAXIMUM FORWARD VOLTAGE DROP Vf (V)	at If (A)	at TEMP (°C)	MAX. REVERSE CURRENT Ir @25°C & Vr (A)	Ir at T & Vr (A)	TEMP T (°C)	AVALANCHE RATINGS TEST VOLT Vr (V)	MAX V BKDN. (V)	MIN SLOPE (A/V)	DESCRIPTION MAT.	DWG. No.
1#	S10HR311	1 0k	490	100B	7.5k			175J	670mØ	490			25m		1.0k			SiΔ	M523
2	501V100B	1 0k	500	120C	10k§	8 3m		200J	1 2	500 †	120C		16mØ	120C	1.0k			SiΔ	S120g⧄
3#	70M100	1 0k	500	129B	9.0k	10m		175A	1 5 †	1.5k	175J		50m		1 0k			Si	S8n
4#	150MA100	1 0k	500	129B	9.0k	10m		175A	1 5 †	1.5k	175J		50m		1.0k			Si	S8p
5#	1S1335R	1 0k	500	130B	9.0k			175J	1 4	1 5k	25J		30m	175J	1.0k			SiΔ	S12h
6	500UDF100A	1 0k†	500	130C	9 0k§	8 3m		200J	1.35 †	500 †	130C		30m	130C	1 0k			Si	M448$
7	A295P	1 0k	500	130C	7 0k	8.3m		200J					15mØ	130C				Si	S132a
8	A296P	1 0k	500	130C	7 0k	8 3m		200J					15mØ	130C				Si	S247
9	501VR100B	1 0k	500	135C	10k§	8.3m		200J	1.2	500 †	135C		16mØ	135C	1.0k			SiΔ	S120g⧄
10▼#	1S2250	1 0k	600	93C	10k§	8.3m		150J	1.85	1 9k	25C		30m	150J	1 0k			SiΔ	M565
11#	FD500D20	1 0k	600	93C	10k§	8.3m		150J	1.85	1 9k	25C		30m	150J	1.0k			SiΔ	M565
12▼#	SiB300P10K35	1.0k	600	105B	8 4k	10m		185J	1 15	1 0k	150J		20m	185J	1 0k			Si	S367
13#	S9K1103K5	1 0k	640	85C	8 0k	10m		175J	1.35	1 2k	25A	2.0m	50m	175C	1 0k			SiΔ	⧄
14	784Z	1 0k	650	150C	8 0k	8.3m		190J	1 3	500	150C		10m⧄		1.0k			Si	
15#	S9K1103K45	1 0k	660	85C	9 0k	10m		175J	1.3	1.2k	25A	2.0m	50m	175C	1.0k			SiΔ	⧄
16#	S9K1103K4	1 0k	680	85C	9 0k	10m		175J	1.25	1 2k	25A	2 0m	50m	175C	1 0k			SiΔ	⧄
17#	S8BR503	1 0k%	685	100B	10k			165J	675mØ	650			20m		800			SiΔ	M429
18▼#	SiG300P10K35	1 0k	700	105C	8.4k	10m		185J	1.15	1 0k	150J		30m	185J	1.0k			Si	S372
19#	S9K1103K35	1 0k	720	85C	10k	10m		175J	1 2	1 2k	25A	2.0m	50m	175C	1 0k			SiΔ	⧄
20#	S9K1103K3	1.0k	750	85C	10k	10m		175J	1.15	1 2k	25A	2.0m	50m	175C	1.0k			SiΔ	⧄
21#	S10BR502	1 0k	750	100B	11k	10m	900	165J	625mØ	700			20m	100B	300			SiΔ	M429
22	A500P	1.0k	800	95C	8 4k	8 3m		175J	1 36 Ø	1.0k	150C		30m	175J	1.0k			Si	M463
23♦	801PD100B	1 0k†	800	135C	10k§	8 3m		200J	1 4	800 †	135C		16mØ	135C	1 0k			SiΔ	J200b
24	A540P	1 0k	1.0k		10k			200J	1.08		150C		50m	200J	1 1k			SiΔ	M463
25#	SSiP0160	1 0k	1 0k	80C	18k	10m		150J	1.3	500	20J	200u	2 0m	150J	300			SiΔ*	M510#
26	A570P	1 0k	1.5k	75C	15k	8 3m		200J	400mØ		130C		50m	200J	1 0k			Si	M463
27	10R11B	1 1k	10	25	60			175	2 0	10	25	5.0u	50m	150	1 1k			Si	
28	1N2327	1 1k⧄	40	25	4 0		1 0	150A	3.3	40	25	1.5u			750	3.3k		SiΔ	A154
29#	0952	1 1k*	.50	50A$	30			150J	2 4 Δ	50	25A	1.0u			1 0k			Si*	S135Δ
30	ED3010	1.1kΔ	50	50	20	8 3m	1 0	100A	1 5 Δ	1.0	25	10u	.03m	100	1 0k			SiΔ	A1bk
31	1N2776	1 1k	75	25A$	15			165S	1.8	75	25A	4.0u	.10m	150	1 1k			Si	A145
32	75R11B	1 1k	75	25	60			175	2.0	.75	25	5 0u	.50m	150	1 1k			Si	
33	ED3010A	1 1kΔ	75	50	25	8 3m	1 0	100A	1 3 Δ	1.0	25	10u	.03m	100	1 0k			SiΔ	A1bk
34#	DS0 9-11A	1.1k	1.0		40	10m		150	1 20	3 0		5 0u	1 0m	150					
35#	DSA0.9-11A	1.1k	1 0		35	10m		150	1 20	3 0		5 0u	1 0m	150					
36	100R11B	1 1k	1 0	25	60			175	2.0	1.0	25	5 0u	50m	150	1 1k			Si	
37	S10110	1 1k	1.0	25A	35			175A	50 Ø	25	150A		.50mØ	150A	1 1k	1 8k		SiΔ	A1gf
38	ED3010B	1 1kΔ	1 0	50	30	8 3m	1 0	100A	1 1 Δ	1.0	25	10u	03m	100	1 0k			SiΔ	A1bk
39	JAN1N3957	1 1k	1 0	100A	30	8.3m		175A	1.1 †	1 0	25	1 0u	300u	150A	1 0k			Si	A1rt
40#	SSiB9860A	1 1k	1 2	45A		10m		150J	1.46	6 3	25J		1.0m	150J				SiΔ	M571a
41#	DS1 2-11A	1 1k	1.3		60	10m		150	1.20	4.0		5 0u	1.0m	150					
42#	DSA1.2-11A	1 1k	1 3		60	10m		150	1.20	4 0		5 0u	1 0m	150					
43	150R11B	1.1k	1 5	25	60			175	2 0	1 5	25	5.0u	50m	150	1.1k			Si	
44	S12110	1 1k	1.6	120C	35		15 ØØ⧄	175J	1.0 Ø	1.0	25A		.10mØ	100C	1 1k	1.8k		SiΔ	DO13Δ
45#	SSiC9960A	1 1k	1 7	45A		10m		150J	1.48	7 8	25J		1.0m	150J				SiΔ	M571
46	200R11B	1.1k	2.0	25	60			175	2.0	2 0	25	5.0u	.50m	150	1 1k			Si	
47#	DS1-600B	1.1k	2.0	45A	80	8 3m	1.2	150A	1.18	5 4	25J	1.0m	2 0m	150A				Si	
48	B172-110	1 1k	2 0	50	60			150C	2.0	2 0	25	5.0u	.50m	100	1.1k			Si	
49#	DS2-11A	1 1k	2 2		120	10m		150	1.2	3 0		5 0u	1 0m	150					
50#	DSA2-11A	1 1k	2.2		120	10m		150	1.20	3 0		5 0u	1.0m	150					
51	250R11B	1 1k	2.5	25	250			175	2.0	2.5	25	10u	1.0m	150	1.1k			Si	
52	300R11B	1 1k	3.0	25	250			175	2.0	3.0	25	10u	1.0m	150	1 1k			Si	
53#	S11BR2	1.1k%	3 0	95B	53	20m		130B	550mØ	1 5	25		2.0m	125	1.1k			Si	S81
54	350R11B	1 1k	3 5	25	250			175	2.0	3.5	25	10u	1.0m	150	1.1k			Si	
55	400R11B	1 1k	4 0	25	250			175	2.0	4.0	25	10u	1.0m	150	1.1k			Si	
56	450R11B	1 1k	4.5	25	250			175	2.0	4.5	25	10u	1.0m	150	1 1k			Si	
57#	SSiD9960A	1 1k	4 7	45A		10m		150J	1.42	15	25J		2.0m	150J				SiΔ	S344
58	500R11B	1.1k	5.0	25	250			175	2.0	5 0	25	10u	1.0m	150	1 1k			Si	
59#	DS6-11A	1 1k	5.0	132	180	10m		150	1.35	15		5 0u	2.0m	150					
60#	DSA6-11A	1 1k	5 0	132	180	10m		150	1.35	15		5.0u	2.0m	150					
61	550R11B	1 1k	5 5	25	250			175	2 0	5 5	25	10u	1.0m	150	1.1k			Si	
62	600R11B	1 1k	6.0	25	250			175	2 0	6 0	25	10u	1.0m	150	1 1k			Si	
63#	DS9-11A	1 1k	9 0	125	240	10m			1.3	27									
64#	DSA9-11A	1 1k	9 0	125	240	10m			1.3	27									
65#	S11AN15	1 1k	15	120B	220			150J	490mØ	15			3.0m		1.1k			SiΔ	S324⧄
66#	S11BN15	1 1k	15	120B	220			150J	490mØ	15			3.0m		1.1k			SiΔ	S320⧄
67#	S11AN20	1 1k	20	120B	250			150J	480mØ	20			3.0m		1.1k			SiΔ	S324⧄
68#	S11BN20	1 1k	20	120B	250			150J	480mØ	20			3.0m		1.1k			SiΔ	S320⧄
69#	DS22-11A	1 1k	20	125	380	10m		150	1 4	60		10u	4.0m	150					
70#	DSA22-11A	1 1k	20	125	380	10m		150	1.4	60		10u	4.0m	150					
71#	S11AN31	1 1k	30	120B	347			150J	600mØ	30			4.0m		1.1k			SiΔ	S325⧄
72#	S11BN31	1 1k	30	120B	347			150J	600mØ	30			4.0m		1.1k			SiΔ	S321⧄
73#	D22-1100B	1 1k	35	80C	500 §	10m		150J	1.35	40	25J	1.0m		25J	1.1k			Si	S4u%
74#	D22-1100C	1 1k	35	80C	500 §	10m		150J	1.35	40	25J	1.0m		25J	1.1k			Si	S69e%
75#	DS42-11A	1.1k	40	120	1.1k	10m		150	1.15	60		20u	4.0m	150					
76#	DSA42-11A	1 1k	40	120	1 1k	10m		150	1.15	60		20u	4.0m	150					
77#	S11AN40	1.1k	40	120B	485			150J	500mØ	40			4.0m		1.1k			SiΔ	S325⧄
78#	S11BN40	1 1k	40	120B	485			150J	500mØ	40			4.0m		1.1k			SiΔ	S321⧄
79#	D42-1100	1.1k	50	115C	1 0k§	10m		150J	1.15	60	25J	1 0m		25J	1.1k			Si	S171q%
80#	S11AN55	1.1k	55	125B	935			150J	500mØ	55			6.0m		1.1k			SiΔ	⧄
81#	S11BN55	1.1k	55	125B	935			150J	500mØ	55			6.0m		1.1k			SiΔ	S322⧄
82#	S11GN55	1.1k	55	125B	935			150J	500mØ	55			6.0m		1.1k			SiΔ	S322⧄
83#	S11AN71	1.1k	70	120B	1 2k			150J	470mØ	70			6.0m		1.1k			S1Δ	⧄
84#	S11BN71	1.1k	70	120B	1.2k			150J	470mØ	70			6.0m		1.1k			SiΔ	S323⧄
85#	S11GN71	1.1k	70	120B	1.2k			150J	470mØ	70			6.0m		1.1k			SiΔ	S322⧄
86	A70PA	1.1k	100	130B	1 6k	8 3m		200J	600mØ	100	130B		4.0m	130B	1.1k			Si	DO8
87	A71PA	1.1k	100	130B	1.6k	8 3m		200J	600mØ	100	130B		4.0m	130B	1.1k			Si	DO8
88#	S12P1100E	1.1k	110	75C	2 0k	10m		175J	1.35	300	25A	1.0m	15m	175C	1.1k			SiΔ	F56m
89#	S10N1100E3	1.1k	125	100C			160	150	.97	125	100C	6.0m	20m	100C	1.1k			Si	F56m
90#	S10N1100E4	1.1k	125	100C			160	150	1.03	125	100C	6 0m	20m	100C	1.1k			Si	F56m
91#	S10N1100E5	1.1k	125	100C			160	150	1.08	125	100C	6 0m	20m	100C	1.1k			Si	F56m
92#	S11P1100E	1.1k	150	75C	2.2k	10m		175J	1.35	300	25A	1 0m	15m	175C	1.1k			SiΔ	F56m
93#	SD1103K	1.1k	150	75C	2 2k	10m		175J	1.35	300	25A	1.0m	15m	175C	1.1k			SiΔ	⧄
94#	S11PN125	1.1k%	150	110B	3.3k			150J	1.1	150			30m		1.1k			Si*	S319⧄
95#	S11BR125	1.1k%	150	115B	3.3k			150J	1.1	150			40m		1.1k			Si*	F19
96#	S11AN125	1.1k%	150	125B	1.0k		189	125B	.44	150	125		30m	125B	880			Si	F19a
97#	S11KN125	1.1k%	150	125B	3.3k			150J	1.1	150			30m		1.1k			Si*	F80⧄
98#	S11LN125	1.1k%	150	125B	3.3k			150J	1.1	150			30m		1.1k			Si*	M521⧄
99#	DS110-11A	1.1k	160	75	3.2k	10m		150	1.4	500		40u	6.0m	150					
100#	DSA110-11A	1.1k	160	75	3 2k	10m		150	1 4	500		40u	6.0m	150					
101#	D100-1100	1.1k	160	95C	1 8k§	10m		150J	1.05	90	25J	3.0m		25J	1.1k			Si	S96b%
102#	S13N1100E	1.1k	190	75C	2.5k	10m		175J	1.35	300	25A	1 0m	15m	175C	1.1k			SiΔ	F56m
103#	S20P1100JA	1.1k	200	100C	4.0k	10m		175J	1 25	600	25A		30m	175C	1.1k			SiΔ	
104#	S11BN200	1.1k%	200	120B	1.3k		260	120	42	200	120		40m	120B	880			Si	F19a
105#	SSiL2060	1.1k	250	94C	4.8k	10m		160J	1.46	785	25J		15m	160J				SiΔ*	S345
106#	SSiL9960	1.1k	250	100C	6.1k	10m		150J	1.3	785	25J		40m	150J				SiΔ*	M572a
107	A90PA	1.1k	250	130B	4 5k	8 3m		200J	400mØ	250	130B		7.0m	130B	1.1k			Si	DO9
108	A91PA	1.1k	250	130B	4.5k	8.3m		200J	400mØ	250	130B		7.0m	130B	1 1k			Si	DO9
109#	S20N1400JA	1.1k	285	70C	4.5k	10m		150J	1 25	600	25A	5.0m	30m	150C	1.1k			SiΔ	M378⧄
110#	S11EN270	1.1k%	290	125B	1 5k		303	125B	.575	290	125B		50m	125B	880			Si*	M307

SYMBOLS AND CODES EXPLAINED IN INTERPRETER

5. RECTIFIERS

IN ORDER OF (1) PIV, (2) MAX AVG FWD CURRENT (3) TEMPERATURE, and (4) TYPE No.

LINE No	4 TYPE No	1 PIV (V)	MAX AVG FWD DC CURRENT 2 Io (A)	3 at TEMP (°C)	MAX RATINGS @ 25°C SURGE CUR. PEAK 1 Cy (A)	PULSE WIDTH (s)	DISS. (W)	MAX. TEMP (°C)	MAXIMUM FORWARD VOLTAGE DROP Vf (V)	at If (A)	at TEMP (°C)	MAX. REVERSE CURRENT Ir @25°C & Vr (A)	Ir at T & Vr (A)	TEMP T (°C)	TEST VOLT Vr (V)	AVALANCHE RATINGS MAX V BKDN. (V)	MIN SLOPE (A/V)	DESCRIPTION MAT	DWG. No.
1#	S11FN270	1 1k%	290	125B	1 5k	20m		160B†	.975	34			50m	125B	1 1k			Si	M357c
2#	S11GN270	1 1k%	290	125B	1 5k	20m		160B†	.975	.34			50m	125B	1 1k			Si	M357a
3#	S13FN270	1 1k%	290	125B	1 5k	20m		160B†	.975	34			50m	125B	1 1k			Si	M357c
4#	S13GN270	1 1k%	290	125B	1 5k	20m		160B†	975	.34			50m	125B	1.1k			Si	M357a
5	S11EN301	1 1k	300	100B	5 1k	10m	410	100B	.65 Ø	300	100B		35m	100B	1 1k			Si	M307
6	S11FN301	1 1k	300	100B	5.1k	10m	410	100B	65 Ø	300	100B		35m	100B	1.1k			Si	M248
7	S11GN301	1 1k	300	100B	5.1k	10m	410	100B	65 Ø	300	100B		35m	100B	1 1k			Si	M248a
8	S11HN301	1 1k	300	100B	5.1k	10m	410	100B	65 Ø	300	100B		35m	100B	1 1k			Si	M370
9#	S11EN290	1 1k%	310	125B	1.6k		332	125B	.60	310	125B		50m	125B	880			Si*	M307
10#	S11FN290	1 1k%	310	125B	1 6k	20m		160B†	975	340				125B	1 1k			Si*	M357c
11#	S11GN290	1 1k%	310	125B	1 6k	20m		160B†	975	340			50m	125B	1 1k			Si*	M357a
12♦#	S11HN290	1.1k%	310	125B	7 2k	10m		160B†	975m	340			50m	125B	1.1k			Si*	M366a
13#	SSiL9860	1 1k	320	96C	6 7k	10m		150J	1.35	1 0k	25J		40m	150J				Si△*	M572
14#	S30N1200JA3	1.1k	320	100C	4 8k	10m		175J	1.15	600	25A	2 0m	30m	175C	1.1k			Si△	M378
15#	S30N1200JA4	1.1k	320	100C	4.8k	10m		175J	1 25	600	25A	2 0m	30m	175C	1 1k			Si△	M378
16#	S11EN310	1 1k%	330	125B	1 7k	20m		160B†	.975	340			50m	125B	1 1k			Si*	M307
17#	S11FN310	1.1k%	330	125B	1 7k	20m		160B†	.975	340			50m	125B	1 1k			Si*	M357c
18#	S11GN310	1 1k%	330	125B	1 7k	20m		160B†	975	340			50m	125B	1 1k			Si*	M357a
19#	S11HN310	1.1k%	330	125B	1 7k	20m		160B†	975	340			50m	125B	1 1k			Si*	M366a
20#	S11EN300	1 1k%	340	125B	2 0k	20m		160B	900m	340			50m	125	1 1k			Si*	M307
21▼#	S11HN300	1 1k%	340	125B	7 2k	10m		160B	900m	340			50m	125	1.1k			Si*	M307
22#	DSA250-11L	1 1k	350		6.0k	10m	20	150	1.20										
23#	S11EN350	1 1k%	370	125B	2.0k	20m		160B†	.975	340			50m	125B	1 1k			Si*	M307
24#	S11FN350	1 1k%	370	125B	2 0k	20m		160B†	975	340			50m	125B	1.1k			Si*	M357c
25#	S11GN350	1 1k%	370	125B	2 0k	20m		160B†	975	340			50m	125B	1 1k			Si*	M357a
26♦#	S11HN350	1 1k%	370	125B	7.8k	10m		160B†	900m	400			50m	125B	1.1k			Si*	M366a
27#	D250-1100	1 1k	400	80C	5.5k§	10m		150J	1 10	220	25J	5 0m		25J	1 1k			Si	M486%
28	A390PA	1 1k	400	145	4 5k			200J	.40	400	130C		8.0m	130C	1 1k			Si△	M377a
29#	SSiN9960	1 1k	450	100C	11k	10m		150J	1.25	1 4k	25J		50m	150J				Si△*	M573
30#	DSA400-11L	1 1k	475		8 5k	10m	20	140	7.20										
31#	S11HR311	1 1k	490	100B	7.5k			175J	670mØ	490			25m		1 1k			Si△	M523
32#	D300-1100	1 1k	500	80C	5 5k§	10m		150J	1 20	400	25J	5 0m		25J	1 1k			Si	M486a%
33	CH1622	1 1k	500	120C	8 5k	8.3m		180S	1.2	500	140C		15m	120C	1 1k	1.4k		Si	F82⊠
34	A295PA	1 1k	500	130C	7 0k	8 3m		200J					15mØ	130C				Si	S132a
35	A296PA	1 1k	500	130C	7 0k	8.3m		200J					15mØ	130C				Si	S247
36#	S9K1203K5	1 1k	640	85C	8 0k	10m		175J	1 35	1.2k	25A	2.0m	50m	175C	1.1k			Si△	⊠
37	784ZB	1 1k	650	150C	8 0k	8.3m		190J	1 3	500	150C		10m⊠		1.1k			Si	
38#	S9K1203K45	1 1k	660	85C	9 0k	10m		175J	1 3	1.2k	25A	2.0m	50m	175C	1 1k			Si△	⊠
39#	S9K1203K4	1.1k	680	85C	9 0k	10m		175J	1 25	1 2k	25A	2.0m	50m	175C	1 1k			Si△	⊠
40#	S9BR503	1.1k%	685	100B	10k			165J	675mØ	650			20m		900			Si△	M429
41#	D450-1100	1 1k	700	85C	10k§	10m		150J	1 10	500	25J	6.0m		25J	1 1k			Si	M486b%
42#	S9K1203K35	1 1k	720	85C	10k	10m		175J	1 2	1.2k	25A	2 0m	50m	175C	1.1k			Si△	⊠
43#	S9K1203K3	1 1k	750	85C	10k	10m		175J	1 15	1.2k	25A	2.0m	50m	175C	1.1k			Si△	⊠
44#	S11BR502	1 1k	750	100B	11k	10m	900	165J	625mØ	700			20m	100B	300			Si△	M429
45	A500PA	1 1k	800	95C	8 4k	8.3m		175J	1 36 Ø	1.0k	150C		30m	175J	1.1k			Si	M463
46	A540PA	1 1k	1 0k		10k			200J	1.08		150C		50m	200J	1 2k			Si△	M463
47	1N543	1 2k	01	100A				150A	10	01	25	100u			1 5k			Si	A9k
48	1N543A	1 2k	035	100A				150A	8 0	05	25	100u			1 5k			Si	A9k
49	KR867	1 2k	40m	75$					3.9									Si	M84f
50	HV12A	1 2k	05	50A	17 §	10m		175A	5 0		25	6 0u						Si	A3t
51	MV12A	1.2k	.05	50A	16 §	10m		175A	5.0		25A	6 0u						Si	A3h
52	ST8	1 2k	80m	75$	5.0			75A	3 9 §	80m	25							Si	M84f*
53	10R12B	1 2k	10	25	60			175	2 0	10	25	5.0u	50m	150	1 2k			Si	
54	1N1409	1 2k	125	75A	6.0			150	5 0	1 2	25	10u	10m	150A	1 2k			Si	A149
55	ST13	1 2k	13	70$				100	3 0 §	13	100							Si	M84x*
56	1N2503	1 2k	15	25A				150A	1 5	10	25	20u	.20m	150	1 2k			Si	A6
57#	SH1D	1 2k	.15	70A	15	10m		100S	1 0	30	25A	10u	.20m	100A	1 2k			Si△	A171
58	CP104	1.2k	.15	100					2 0		25								M84ag
59	A1N1	1.2k	20	25	60			175A	50		150	1.0u	.50m	150	1 2k			Si	A84a
60	A1N5	1.2k	20	25	60			175A	50		150	5 0u	.50m	150	1 2k			Si	A84a
61	A1N9	1 2k	20	25	60			175A	.50		150	10u	.50m	150	1 2k	100	200u	Si	A84a
62	B1N1	1 2k	20	25	60			175A	50		150	1.0u	.50m	150	1.2k			Si	A1rx
63	B1N5	1.2k	20	25	60			175A	50		150	5.0u	.50m	150	1 2k			Si	A1rx
64	B1N9	1 2k	.20	25	60			175A	50		150	10u	50m	150	1 2k	100	200u	Si	A1rx
65	S12△	1.2k	200m	25	15				1 2	300m	25	100u			1 2k			Si	A54
66	K1N5	1.2k	20	50	60			150C	2 0	20	25	5 0u	50m	100C	1 2k			Si	
67	HV12B	1 2k	.25	50A	17 §	10m		175A	5 0		25	6 0u						Si	A3t
68	MV12B	1.2k	25	50A	16 §	10m		175A	5 0		25A	6 0u						Si	A3h
69	S27	1 2k	25	80$	15				1 2	40	25	10u			1 2k			Si	A54
70	1N549	1 2k	30	25				150	1 1	30	25		.50m	150	1 2k			Si	A189
71	1N2507	1 2k	30	25A				150A	1 5	.20	25	20u	20m	150	1 2k			Si	A6
72	XS12	1.2k	.30	25	15							50u			1.2k			Si	A54
73#	12G4	1 2k	40	25A				150A	1 5	40	25A	10u			1.2k			Si△	DO3
74	1N3487	1 2k	40	35A	10			125A	2 0	40	25	50u			1.2k			Si	DO1
75	K2N5	1 2k	.40	50	60			150C	2.0	40	25	5 0u	.50m	100C	1 2k			Si	
76	1N1109	1.2k	43	100	26	4 0m		150	4.5			2.0m			1.2k			Si	F22b
77	A2N4	1 2k	475	25A	25			175A	1 5	50	25	1.0u△	.50m⊠	150	1.2k			Si	A84
78	1N3233	1.2k	.50	25$	12				3.3	50			500u	150	1 2k			Si	A1cs
79#	D125C	1 2k	.50	25A	30	10m	55	150A	1.2	.50 †	25		.15m	125A	1 2k			Si△	A100
80	.5E12	1 2k	500m	50	50 §			175	1.1	500m	50	2 0u	50u	100	1.3k			Si△	DO27
81	5J12	1 2k	500m	50	50 §			175	1 1	500m	50	2.0u	50u	100	1 3k			Si△	DO15
82	HV12C	1.2k	50	50A	17 §	10m		175A	5 0		25	6.0u						Si	A3t
83	MV12C	1 2k	.50	50A	16 §	10m		175A	5.0	.50	25A	6.0u			1.2k			Si	A3h
84#	Y23	1 2k	50	50A	30			100A	1.0		25	10u			800			Si△	A89
85	1N4252	1 2k	50	55A	5 0			175A	1 7	.50	25	10u			1 2k			Si	A1eh
86	MPR12	1 2k	500m	100A	25	8.3		175J	1.8	500m	25A	5.0u	200u	175J					
87	A2N1	1 2k	60	25	60			175A	50		150	1.0u	50m	150	1.2k			Si	A84a
88	A2N5	1 2k	60	25	60			175A	.50		150	5 0u	50m	150	1.2k			Si	A84a
89	A2N9	1 2k	60	25	60			175A	50		150	10u	50m	150	1.2k	100	200u	Si	A84a
90	B2N1	1 2k	.60	25	60			175A	50		150	1.0u	50m	150	1.2k			Si	A1rx
91	B2N5	1 2k	.60	25	60			175A	50		150	5 0u	50m	150	1 2k			Si	A1rx
92	B2N9	1 2k	.60	25	60			175A	50		150	10u	50m	150	1.2k	100	200u	Si	A1rx
93	K3N5	1.2k	.60	50	60			150C	2 0	.60	25	5 0u	.50m	100C	1.2k			Si	
94	SM305	1 2k	.60	50$	20			150J	1.2	.60	25	10u	500u	150	1.2k			Si	A84
95#	P6RP12	1 2k	60	60$	20	8.3m		125	1 2 Ø	.60	60		200uØ	85	850			Si	A1fx
96	TM126	1 2k	.60	75C				175C	2.0	.40	25		50m	150C	1.2k			Si	A145
97	1N2777	1 2k	.75	25A$	15			165S	1.8	.75	25A	4.0u	10m	150	1 2k			Si	A145
98	1N3244	1.2k	75	25$	15				2 2	.75			500u	150	1.2k			Si	A1cs
99	75R12B	1.2k	75	25	60			175	2 0	75	25	5.0u	.50m	150	1 2k			Si	
100	A3N1	1 2k	.75	25	60			175A	50		150	1 0u	.50m	150	1.2k			Si	A84a
101	A3N5	1 2k	.75	25	60			175A	50		150	5.0u	.50m	150	1 2k			Si	A84a
102	A3N9	1 2k	75	25	60			175A	50		150	10u	.50m	150	1.2k	100	200u	Si	A84a
103	B3N1	1 2k	75	25	60			175A	.50		150	1 0u	.50m	150	1.2k			Si	A1rx
104	B3N5	1 2k	75	25	60			175A	.50		150	5.0u	.50m	150	1 2k			Si	A1rx
105	B3N9	1.2k	75	25	60			175A	.50		150	10u	.50m	150	1.2k	100	200u	Si	A1rx
106	7E12	1 2k	750m	50	60 §			175	1.1	750m	25	2.0u	50u	100	1.3k			Si△	DO27
107	.7J12	1 2k	750m	50	60 §			175	1.1	750m	25	2 0u	50u	100	1.3k			Si△	DO15
108	1N2618	1.2k	75	50A	30			175A	1.1 △	75			.50m	150A	1.2k			Si△	A31a
109	1N3724	1.2k†	75	50A	12			175A	2.2	75	50A	5.0u	.50m	150A	1.2k			Si	A1bp
110	A3N3	1.2k†	75	50A	35			175A	1 1	50	25	10u△	.30m⊠	150	1.2k			Si	A84

SYMBOLS AND CODES EXPLAINED IN INTERPRETER

5. RECTIFIERS

IN ORDER OF (1) PIV, (2) MAX AVG FWD CURRENT (3) TEMPERATURE, and (4) TYPE No.

LINE No.	4 TYPE No.	1 PIV (V)	MAX AVG FWD DC CURRENT 2 Io (A)	3 at TEMP (°C)	MAX RATINGS @ 25°C SURGE CUR. PEAK 1 Cy (A)	PULSE WIDTH (s)	DISS. (W)	MAX. TEMP (°C)	MAXIMUM FORWARD VOLTAGE DROP Vf (V)	at If (A)	at TEMP (°C)	MAX. REVERSE CURRENT Ir @25°C & Vr (A)	Ir at T & Vr (A)	TEMP T (°C)	TEST VOLT Vr (V)	AVALANCHE RATINGS MAX V BKDN. (V)	MIN SLOPE (A/V)	DESCRIPTION MAT.	DWG. No.
1	CER1200F	1.2k	.75	50A	50	8.0m		175A	1.2	.75	25	10u			1.2k			Si	F29
2	DK7512	1.2k	750m	50A	60			175A	1.2	750m	25A	10u	100u	100	1.2k			Si	DO27
3	M1200	1.2k	.75	50	50	8.3m		175	1.2		25	10u						Si	A3h
4#	OY1011	1 2k	.80 Ø	45A	60	10m		130J	1.3	5.0	25	100u		25	800			Si	M42
5#	1S1349	1.2k	80	50A	40	8.3m		150J	1.2	3.0	25A	10uØ	.50mØ	150J	1.2k			Si△	A89b
6	K4N5	1.2k	.80	50	60			150C	2.0	.80	25	5.0u	.50m	100C	50			Si	
7#	SR1C24	1.2k	800m	50A	40 §	8.3m		150J	1.2	3.0	25A	10u	500u	150J	1.2k			Si△	A34d
8	A4N1	1.2k	.85	25	60			175A	.50		150	1.0u	.50m	150	1.2k			Si	A84a
9	A4N5	1 2k	.85	25	60			175A	.50		150	5.0u	.50m	150	1.2k			Si	A84a
10	A4N9	1.2k	.85	25	60			175A	.50		150	10u	.50m	150	1.2k	100	200u	Si	A84a
11	B4N1	1.2k	85	25	60			175A	.50		150	1.0u	.50m	150	1.2k			Si	A1rx
12	B4N5	1 2k	85	25	60			175A	.50		150	5.0u	.50m	150	1.2k			Si	A1rx
13	B4N9	1.2k	.85	25	60			175A	.50		150	10u	.50m	150	1.2k	100	200u	Si	A1rx
14	SM212	1.2k	.85	50$	35				1.0	1.0	25	10u			1.2k			Si	A41a
15	CR101	1.2k	.85	60A	15			125A	1.2 Ø	.85	60A	600u△	.30mØ	60A	1.2k			Si△	M100aØ
16	1N2226	1.2k	1.0	25$	20			150	.60	1.5	25		750u	150	1.2k			Si△	DO4
17	1N2226A	1.2k	1.0	25$	20			150	.60	1.0	25		350u	150	1.2k			Si△	DO4
18	1N2227	1.2k	1.0	25$	20			150	.60	1.5	25		750u	150	1.2k			Si△	S35
19	1N2227A	1.2k	1.0	25$	20			150	.60	1.0	25		350u	150	1.2k			Si△	S35
20	100R12B	1.2k	1.0	25	60			175	2.0	1.0	25	5.0u	.50m	150	1.2k			Si	
21	A5N1	1.2k	1.0	25	60			175A	.50		150	1.0u	.50m	150	1.2k			Si	A84a
22	A5N5	1.2k	1.0	25	60			175A	.50		150	5.0u	.50m	150	1.2k			Si	A84a
23	A5N9	1 2k	1.0	25	60			175A	.50		150	10u	.50m	150	1.2k	100	200u	Si	A84a
24	B5N1	1.2k	1.0	25	60			175A	.50		150	1.0u	.50m	150	1.2k			Si	A1rx
25	B5N5	1.2k	1.0	25	60			175A	.50		150	5.0u	.50m	150	1.2k			Si	A1rx
26	B5N9	1.2k	1.0	25	60			175A	.50		150	10u	.50m	150	1.2k	100	200u	Si	A1rx
27	S10120	1.2k	1.0	25A	35			175A	.50 Ø	.25	150A		.50mØ	150A	1.2k	1.8k		Si△	A1gf
28	SLA20AB	1.2k	1.0	25	60	8.3m		150A	1.0	1.0	25	1.0u	.10m	100	1.2k			Si	A69
29	SLA20C	1 2k	1.0	25	60	8.3m		150A	1.1	1.0	25	5.0u	.25m	100	1.2k			Si	A69
30	US12	1.2k	1.0	25	20	8.3m		150A	2.0	.40	25	2.0u	.10m	100	1.2k			Si	A1fv
31#	SJ1003H	1 2k	1.0	30A	32	10m		150J	1.0	750m	25A	10u	50u	120A	1.2k			Si△	A31n
32	1B12	1.2k	1.0	50C$	11			150C	2.0	1.0	25	2.0u	.05m	100	1.2k			Si	M79
33	1C12Ø	1.2k	1.0	50C$	11			150C	2.0	1.0	25	2.0u	.05m	100	1.2k			Si	M116a
34	BTB1200	1.2k	1.0	50	50	8.0m		150A	1.1	1.0	50	10						Si	DO27
35	BTM1200	1.2k	1.0	50	30	8.0m		150A	1.1	1.0	50	10						Si	A1ry
36	E12	1 2k	1.0	50	75 §			175	1.1	1.0	25	2.0u	50u	100	1.3k			Si△	DO27
37	EM12	1 2k	1 0	50	75 §			175	1.1	1.0	25	2.0u	50u	100	1.3k			Si△	DO41
38	J12	1 2k	1.0	50	75 §			175	1 1	1.0	25	2.0u	50u	100	1.3k			Si△	DO15
39	K5N5	1.2k	1.0	50	60			150C	2.0	1.0	25	5.0u	.50m	100C	1.2k			Si	
40	1F12	1.2k	1.0	100	50		1.0	150C	1.3	2.0	25	2.0u	50u	100	1.3k			Si△	F22
41	A5N2	1.2k†	1 0	100A	45			200A	1.0	.75	25	1.0u△	.20mØ	150	1.2k			Si	A84
42	A1423MH2AB1	1.2k	1.04	50A				150A	1.8	100m	25	5.0u	100u	150A	1.2k			Si	M212d
43	A1423PBC1AB1	1.2k	1.06	50A				150A	1.8	100m	25	5.0u	100u	150A	1.2k			Si	M205h
44#	DS0.5A3	1.2k	1.1	25J	60	10	970m	150	1 4	3.3	25J	1.0m	2.0m	150	800			Si	Z3
45#	DS1.2A12	1.2k	1.1	25J	60	10m	970m	150	1.40	3.3	25J	1.0m	2.0m	150	800			Si	
46	HC1200F	1 2k	1.1	50A	50	8.0m		175A	1.2	1.1	25	10u			1.2k			Si	F29
47	MH1200	1.2k	1.1	50	50	8.3m		175	1.2		25	10u						Si	A3h
48	HC1200	1.2k	1.1	75A	75	4.0m		150A	1.2	1.1	100	10u△	.20m	100	1.2k			Si	DO27
49	A1425MH2AB1	1.2k	1.15	50A				150A	1.8	100m	25	5.0u	100u	150A	1.2k			Si	A1ga
50	A6N1	1.2k	1.2	25	60			175A	.50		150	1.0u	.50m	150	1.2k			Si	A84a
51	A6N5	1.2k	1.2	25	60			175A	.50		150	5.0u	.50m	150	1.2k			Si	A84a
52	A6N9	1.2k	1.2	25	60			175A	.50		150	10u	.50m	150	1.2k	100	200u	Si	A84a
53	B6N1	1.2k	1.2	25	60			175A	50		150	1.0u	.50m	150	1.2k			Si	A1rx
54	B6N5	1.2k	1.2	25	60			175A	.50		150	5.0u	.50m	150	1.2k			Si	A1rx
55	B6N9	1.2k	1.2	25	60			175A	.50		150	10u	.50m	150	1.2k	100	200u	Si	A1rx
56	EC120	1.2k	1.2	50	75	8.3m		150	1.2	1.2	25	2.0u	.10m	100	1.2k			Si	DO27
57	K6N5	1.2k	1.2	50	60			150C	2.0	1.2	25	5.0u	.50m	100C	1.2k			Si	
58#	RAS310AF	1.2k	1.25	25A	60	5.0m	1.5	140J	1.1 △	1.5	25C	20u△	.10m△	140J	1.0k	1.8k	200u	Si△	DO1△
59#	SSiC1580A	1.2k	1.25	45A	75	10m		150J				1.0u			1.2k	2.0k		Si△	A770
60	TM125	1.2k	1.25	75C				175C	2.0	.80	25		.50m	150C	1.2k			Si	A145
61	A1423MC2AB1	1.2k	1.3	50A				150A	1.8	100m	25A	5.0u	100u	150A	1.2k			Si	M205j
62▼#	BYX22-1200	1.2k	1.4	30A	40 §	10m		150J	1.5	5.0	25A							Si	A163
63#	SKE1/10	1.2k%	1.4	45A	50 §	70m	1.2	160	1.3	3.1 Ø	25		100uØ	130	800			Si	C42s
64	1N2656	1.2k	1.5	25A	15	8.3m		165A	3.9	1.5	25A	800u			1.2k			Si	M126a
65	150R12B	1 2k	1.5	25	60			175	2.0	1.5	25	5.0u	.50m	150	1.2k			Si	
66	A7N1	1 2k	1.5	25	60			175A	.50		150	1.0u	.50m	150	1.2k			Si	A84a
67	A7N5	1.2k	1 5	25	60			175A	.50		150	5.0u	.50m	150	1.2k			Si	A84a
68	A7N9	1 2k	1.5	25	60			175A	.50		150	10u	.50m	150	1.2k	100	200u	Si	A84a
69	B7N1	1.2k	1 5	25	60			175A	.50		150	1.0u	.50m	150	1.2k			Si	A1rx
70	B7N5	1.2k	1 5	25	60			175A	.50		150	5.0u	.50m	150	1.2k			Si	A1rx
71	B7N9	1.2k	1.5	25	60			175A	50		150	10u	.50m	150	1.2k	100	200u	Si	A1rx
72#	SA12M1	1 2k	1.5	25A	47		2.0	150A	2.0	10	25J	10u	300u	150J	1.2k	1.5kØ		Si△	DO27
73#	SL1203M	1.2k	1.5	30A	30	2.0m		125C	1.34	7.5	25A	5.0u	110u	100C	1.2k			Si△	S33
74#	S15CN1	1.2k	1.5	40A	45		1 7	150A				10u	.25m	150J	1.2k			Si△	A31n
75#	S15M1	1.2k	1.5	40A	47		2.0	170A				10u	300u	150	1.2k			Si△	DO27
76#	SSiC1680A	1 2k	1.5	45A	75	10m		150J				1.0u			1.2k	2.0k		Si△	A230
77	1.5E12	1.2k	1.5	50A	75 §			175A	1.1	1.5	25A	2.0u	50u	100	1.3k			Si△	DO27
78	1.5J12	1.2k	1.5	50	75 §			175	1.1	1.5	25A	2.0u	50u	100	1.3k			Si△	DO15
79	DRS112	1 2k	1.5	50A	50 §	8.3m		125A	1.0	1.0	25A	10u	200u	125A	1.2k			Si	A168c
80	K7N5	1.2k	1 5	50	60			150C	2.0	1.5	25	5.0u	.50m	100	1.2k			Si	
81▼	CTN1200	1.2k	1.5	75	50			175A	1.0			10u			1.2k			Si	M594*
82▼	CTP1200	1.2k	1.5	75	50			175A	1.0			10u			1.2k			Si	M594a*
83▼	VB1200	1.2k	1 5	75	50			175A	1.0			10u			1.2k			Si	M594b*
84	S12120	1.2k	1.6	120C	35		15 ØØ	175J	1.0 Ø	1.0	25A		.10mØ	100C	1.2k	1.8k		Si△	DO13△
85	200R12B	1 2k	2.0	25	60			175	2.0	2.0	25	5.0u	.50m	150	1.2k			Si	
86	SLA30A	1.2k	2 0	25	80	8.3m		150A	.95	2.0	25	1.0u	.10m	100	1.2k			Si	A69
87	SLA30B	1.2k	2.0	25	80	8.3m		150A	1.0	2.0	25	1.0u	.10m	100	1.2k			Si	A69
88	SLA30C	1.2k	2.0	25	80	8 3m		150A	1.0	2.0	25	5.0u	.25m	100	1.2k			Si	A69
89	2A1200	1 2k	2 0	50A	200	8.0m	2.0	175A	1.2	2.0	25A	25u			1.2k			Si	A3t
90	B172-120	1 2k	2.0	50	60			150C	2.0	2.0	25	5.0u	.50m	100	1.2k			Si	
91#	ED20	1 2k	2.0	50	100	10		125	1.2	2 0	25	5 0			1.2k	1.2k		Si	S19r
92	K8N5	1.2k	2 0	50	60			150C	2.0	2.0	25	5.0u	.50m	100	1.2k			Si	
93♦	SCHS12500	1 2k	2.0	55	150			175A	25	1.0	25	10u	120u	100	1.2k			Si	A138u
94	2F12	1 2k	2.0	75C	50			150C	1.3	2.0	25C	2.0u	50u	100C	1.3k			Si△	F22
95#	1S1358	1 2k	2.0	124C	40	8 3m		150J	1.2	3.0	25A	10uØ	.50mØ	150J	1.2k			Si△	S48c
96#	SR2B24	1.2k	2.0	124C	60			150J	1.2 †§	3.0	25C	10u	500u	150J	1.2k				S157a
97#	SSiC1980A	1 2k	2.3	45A	75	10m		150J				1.0u			1.2k	2.0k		Si△	A231
98	250R12B	1 2k	2.5	25	250			175	2.0	2.5	25	10u	1.0m	150	1.2k			Si	
99#	SL1203F	1 2k	2.5	30A	30	2.0m		150C	1.05	7.5	25A	5.0u	110u	100C	1.2k			Si△	DO1
100♦#	SKN2.5/12	1 2k	2.5	45A	120 §	10m		190A	1.0 §	2.5	25J	50u			840			Si	S352b
101#	SJ1203F	1 2k†	2.5	100A	30			150A	1.0	.75	25A	10u	.30m	150A	1.2k			Si△	DO3
102	TM124	1 2k	2 7	75C				175C	2.0	2.0	25		.50m	150C	1.2k			Si	A145
103	1N2720	1 2k	3.0	25A	15	8.3m		165A	3 9	3.0	25A	800u			1.0k			Si	M126c
104	1N2739	1.2k	3 0	25A	15	8 3m		165A	3.9	3.0	25A	800u			1.2k			Si	M126g
105	1N2764	1.2k	3.0	25A	15	8.3m		165A	3.9	3.0	25A	300u			1.2k			Si	M126g
106	30R12	1 2k	3.0	25	200	8.0m	3.0	25	1 0	3 0	25	10u	50u	100	1.2k			Si	A1rz
107	300R12B	1 2k	3.0	25	250			175	2.0	3.0	25	10u	1.0m	150	1.2k			Si	
108	1N4146	1.2k	3 0	50A	300	8.3m		175A	1.0	3.0	50A		100u	50A	2.0k			Si	DO7
109	SLA5204	1.2k	3 0	55	300			175	1.0	3.0	25	5.0u	.12m	100	1.2k			SL	A31a
110#	3F120	1 2k	3.0	90B	40	10m		190J	.65	3.0	190J	1.5u	12m	175J	1.2k			Si△	DO4Ø

SYMBOLS AND CODES EXPLAINED IN INTERPRETER

5. RECTIFIERS

IN ORDER OF (1) PIV, (2) MAX AVG FWD CURRENT (3) TEMPERATURE, and (4) TYPE No.

LINE No.	4 TYPE No.	1 PIV (V)	MAX AVG FWD DC CURRENT 2 Io (A)	3 at TEMP (°C)	MAX RATINGS @ 25°C SURGE CUR. PEAK 1 Cy (A)	PULSE WIDTH (s)	DISS. (W)	MAX. TEMP (°C)	MAXIMUM FORWARD VOLTAGE DROP Vf (V)	at If (A)	at TEMP (°C)	MAX. REVERSE CURRENT Ir @25°C & Vr (A)	Ir at T & Vr (A)	TEMP T (°C)	TEST VOLT Vr (V)	AVALANCHE RATINGS MAX V BKDN. (V)	MIN SLOPE (A/V)	DESCRIPTION MAT.	DWG. No.
1#	S12BR2	1.2k%	3 0	95B	53			130B	.55 Ø	1 5	25		2.0m	125	1 2k			Si	S81
2	3E12	1 2k	3.0	100	200	8.0m	3 0	175	1 2	3.0	100	10u	100u	50	1.3k			Si∆	A1ec
3#	1S1631	1.2k	3.0	150C	90	10m		175J	1.3	15	25J		470m	175J	1.2k	1.9k		Si	S187a
4	JAN1N3650,R	1 2k	3.3	50C	25	8 3m		150C	2.2 †	10	25C	5.0u	.20m	150C	1 0k			Si	DO4Ø
5	350R12B	1.2k	3 5	25	250			175	2.0	3 5	25	10u	1.0m	150	1.2k			Si	
6	1N2690	1.2k	3.6	25A	15	8.3m		165A	3 9	3 6	25A	800u			1 2k			Si	M126e
7	400R12B	1.2k	4.0	25	250			175	2.0	4.0	25	10u	1.0m	150	1.2k			Si	
8#	G1204	1.2k	4 0	25A	100	10m	4.5	150A	1.2	4.0 †	25		3.0m	125C	1.2k			Si∆	DO4
9#	P1204	1.2k	4 0	25A	100	10m	4.5	150A	1.2	4.0 †	25		3.0m	125C	1.2k			Si∆	S95a
10#	BYY91	1.2k	4 0	50B	50			150J	1.3	2.0	25J	5 0u			1 2k			Si∆	M41a
11	4F12	1 2k	4 0	75	300	8 0m	3 0	175B	1.3	4 0	25	100u	500u	100	1.2k			Si∆	F22
12#	SSiC2080A	1.2k	4.0	115C	75	10m		150J				1 0u			1.2k	2.0k		Si∆	S112b∆
13	450R12B	1 2k	4.5	25	250			175	2.0	4.5	25	10u	1.0m	150	1.2k			Si	
14	1N2244	1.2k	5 0	25$	20			150	.60	1.5	25		750u	150	1.2k			Si∆	DO4
15	1N2244A	1.2k	5.0	25$	100			150	60	5.0	25		350u	150	1 2k			Si∆	DO4
16	1N2245	1 2k	5.0	25$	20			150	.60	1.5	25		750u	150	1.2k			Si∆	S35
17	1N2245A	1.2k	5 0	25$	100			150	.60	5 0	25		350u	150	1 2k			Si∆	S35
18	500R12B	1 2k	5.0	25	250			175	2.0	5.0	25	10u	1.0m	150	1.2k			Si	
19#	SKN5/12	1.2k	5.0	45A	160	10m		190A	1.0	10	150								S352b
20#	SJ1203E,K	1.2k†	5.0	100C	30		3 0	150A	1 0	75	25C	10u	.30m	150C	1 2k			Si∆	DO4Ø
21	550R12B	1.2k	5 5	25	250			175	2.0	5.5	25	10u	1.0m	150	1.2k			Si	
22	6A1200	1 2k	6.0	25	300	8.0m		175	1.2	6.0	25	25u						Si	S19f
23	600R12B	1.2k	6 0	25	250			175	2 0	6 0	25	10u	1.0m	150	1 2k			Si	
24#	G1206	1.2k	6.0	25A	140	10m	8.0	150A	1.2	6.0 †	25		3.0m	125C	1.2k			Si∆	DO4
25#	P1206	1 2k	6.0	25A	140	10m	8 0	150A	1 2	6 0 †	25		3.0m	125C	1.2k			Si∆	S95a
26#	6F120	1 2k	6 0	55B$	120	10m		190J	.65	6 0	25		3 0mØ	150	50			Si∆	DO4
27#	BYX48/1200	1 2k	6 0	125B	90 §			175J	1.8 †	15	25J		20m	125J	800			Si∆	DO4Ø
28#	S6-1203K	1 2k	6 0	125C	130	10m		150J	1.5	32	25A	20u	500u	150C	1.2k			Si∆	DO4Ø
29#	S12AN6	1.2k†	6 0	125B	125		6.5	150J	470mØ	6.0 †			2.0m	125B				Si∆	DO4Ø
30#	1S1628	1.2k	6.0	140C	150	10m		175J	1.35	30	25J		900u	175J	1.2k	1 9k		Si	S187a
31#	SiD01N	1.2k	7.0	90C	60	10m		140J	1 25	6.0	25	100u		25	800			Si	A31u
32#	SiD02N	1 2k	9.5	90C	110	10m		140J	1 15	6.0	25J	10u		25J	800			Si	A31u
33	1N2264	1.2k	10	25$	200			150	.60	10	25		5 0m	150	1.2k			Si∆	DO4
34	1N2264A	1 2k	10	25$	200			150	.60	10	25		500u	150	1 2k			Si∆	DO4
35	1N2265	1.2k	10	25$	200			150	.60	10	25		5.0m	150	1.2k			Si∆	S35
36	1N2265A	1 2k	10	25$	200			150	.60	10	25		500u	150	1.2k			Si∆	S35
37	1N3934	1 2k	10	25$	25			150	2 0	10	25	10u			1 2k			Si∆	DO4
38	JAN1N4459,R	1.2k*	10	25C	100	8.3m		150C	1 5 †	15	25	50u	.50m	150C	1.0k			Si	DO4
39#	G1210	1 2k	10	25A	230	10m	17	150A	1 1	10 †	25		3.0m	125C	1.2k			Si∆	DO4
40#	P1210	1 2k	10	25A	230	10m	17	150A	1 1	10 †	25		3 0m	125C	1.2k			Si∆	S95a
41#	0608	1 2k	10	45	300	10m		150J	1.4	30	25	100u			700			Si	S87e
42#	72R2S	1 2k	10	75A	115 §	10m		150C	1.1	10	25C		2.0m	150C	1.2k	1 3 Ø		Si∆	DO4Ø
43#	SSiD0480	1 2k	10	110C	125	10m		160J										Si∆	S4p∆
44#	SSiD0480A	1 2k	10	110C	125	10m		160J								2.0k		Si∆	S4p∆
45#	SA12AN12	1 2k	10	120B	210			150J	470mØ	10			2.0m		1.2k			Si∆	DO4Ø
46#	BYX42/1200	1 2k	10	125B	125 §			175J	1 4 †	15	25J		.20m	125J	800			Si∆	DO4Ø
47#	S12AN12	1.2k%	10	125B	210			150J	500mØ	9.5	25B		2.0m	125B				Si∆	DO4Ø
48#	2WMT12	1.2k	11	100C	220 §	10m		125J	1 5	40	100C		7.0m	125J	1.2k			Si*	DO5
49#	8AN120	1 2k	12	55A	210	10m		140B	.65 Ø	13	25A		10m	120J	1.2k			Si	S4q∆#
50♦	A129PB	1 2k	12	64	150	8.3m		125	1.55	12	64		6.0m	125	1.2k			Si	DO4
51#	SiD03N	1 2k	12	85C	120	10m		140J	1.55	20	25J	500u		25J	800			Si	M346
52▼#	SR10A24	1.2k	12	120C	200 §	8 3m		150J	1.52	35	25C		3.0m	150J	1.2k			Si∆	S19t
53#	SR10D24	1.2k	12	120C	200			150J	1 3 †§	20	25C		3 0m	150J	1.2k				S19c
54	1N4511	1.2k	12	135C	240		10	175C	1 4	12			1.5m	135C	1.2k	1.5k		Si	DO4
55#	12QF11	1 2k	12	138C	240	10m		175J	1 5	50	25J		1.5	175J	1.2k	1.9k	1 5k	Si	S4k
56	1N5331	1.2k†	12	150C	240 §			200C	1.35 †	12	150C		.50m	150C	1.2k			Si	DO4
57♦#	SKN12/12	1 2k	12.5	125C	200 §	10m		180A	1.0 §	10	25J	150u			840			Si	S353Ø
58	15GS12	1.2k	15	75C	150	8.3m		150J	1 5	32	25A	20u	500u	150C	1.2k			Si∆	DO4Ø
59#	S12AN15	1 2k	15	120B	220			150J	490mØ	15			3.0m		1.2k			Si∆	S324Ø
60#	S12BN15	1 2k	15	120B	220			150J	490mØ	15			3.0m		1.2k			Si∆	S320Ø
61#	SK1203K	1 2k	17.5	85C	230	10m		150J	1 4	50	25A	20u	500u	150C	1.2k			Si∆	DO4Ø
62#	S12BR8	1 2k%	18	120B	188		18	140B	60 Ø	18	25		10m	125	1.2k			Si	S122a
63	1N2281	1.2k	20	25$	400			150	.60	20	25		1 0m	150	1.2k			Si∆	DO4
64#	212R2S	1 2k	20	25	250 §	10m	25	150J	500m	20	25C		1 5m	150C	1.2k	1.3 Ø		Si∆	DO5Ø
65	BYX13/1200	1.2k	20	100C	600	10m	35	150J	2 0	100	25C		1 4m	125C	600			Si	S72cØ
66#	S12AN20	1.2k	20	120B	250			150J	480mØ	20			3 0m		1 2k			Si∆	S324Ø
67#	S12BN20	1 2k	20	120B	250			150J	480mØ	20			3 0m		1.2k			Si∆	S320Ø
68♦#	SKN20/12	1 2k	20	125C	270 §	10m		180A	1.0 §	4.5	25J	150u			840			Si	S171sØ
69#	RN1220	1.2k	20	150C	250	10m		175C	1 5	70	25C		5.0m	150C	1.2k			Si∆	DO5
70#	3WM12	1.2k	21	100C	220 §	10m		125J	1.4	60	100C		14m	125J	1 2k			Si*	S8
71▼	A139PB	1.2k	25	75	400	8.3m		125	1 85	25	75		6 0m	125	1 2k			Si	DO5
72#	1S1419	1.2k	25	135C	500	10m		175J	1.38	100	25J		2.0m	175J	1.2k	1.9k		Si	S4k
73#	SR30B24	1.2k	30	100C	600			150J	1 3 †§	50	25C		10m	150J	1.2k				S19d
74#	3C12	1.2k	30	110C	500	10m		150J	1.5	30	40A		3.0m	25	1.2k			Si*	S181
75#	S12AN31	1 2k	30	120B	347			150J	600mØ	30			4.0m		1.2k			Si∆	S325Ø
76#	S12BN31	1 2k	30	120B	347			150J	600mØ	30			4.0m		1.2k			Si∆	S321Ø
77#	15AN120	1.2k	34	20A	500	10m		140B	700mØ	25	25A		20m	120J	1 2k			Si	S241aØ#
78	1N2288	1 2k	35	25$	20			150	.60	1.5	25		500u	150	1.2k			Si∆	DO5
79#	312R2S	1 2k	35	25	500 §	10m		200J	1.3	35	25C		10m	150C	1.2k	1 3 Ø		Si∆	DO5Ø
80	1N4530	1.2k	35	115C	500		20	175C	1.4	35			2.0m	115C	1 2k	1 5k		Si	DO5
81	1N5332	1 2k†	35	140C	500 §			200C	1 7 †	35	140C		2.0m	140C	1 2k			Si	DO5
82	JAN1N3768,R	1 2k	35	150C	500	8.3m		150A	1.4 †	110	25	20u	3 0m	150C	1.0k			Si	DO5
83#	SUT1201K	1.2k	36	85C	600	10m		150J	1 6	90	25A	200u	3 0m	150C	1 2k			Si∆	DO5Ø
84#	K1240	1.2k	40	90C	800	10m		125C	1.2	125	25C		4.0m	125C	1.2k			Si∆	S245
85#	6WM12	1.2k	40	100C	650 §	10m		125J	1 4	110	100C		14m	125J	1 2k			Si*	S8
86▼#	4C12	1.2k	40	110C	700	10m		150S	1 5	40	40A	3 0m	12m	150	1.2k			Si*	S181
87#	S12AN40	1.2k	40	120B	485			150J	500mØ	40			4.0m		1.2k			Si∆	S325Ø
88#	S12BN40	1 2k	40	120B	485			150J	500mØ	40			4.0m		1.2k			Si∆	S321Ø
89#	S15BR25	1 2k†	40	120B	250	20m		140B	1 2	40			20m		1 2k			Si*	S122Ø
90#	S15CR25	1.2k†	40	120B	250	20m		140B	1 2	40			20m		1 2k			Si*	S123Ø
91#	S15DR25	1.2k†	40	120B	250	20m		140B	1 2	40			20m		1 2k			Si*	S125Ø
92#	S15ER25	1.2k†	40	120B	250	20m		140B	1 2	40			20m		1.2k			Si*	S124Ø
93#	S15BR30	1.2k†	44	125B	250	20m		140B	1 1	44			16m		1.5k			Si*	S122Ø
94#	S15CR30	1 2k†	44	125B	250	20m		140B	1.1	44			16m		1 5k			Si*	S123Ø
95#	S15DR30	1 2k†	44	125B	250	20m		140B	1.1	44			16m		1.5k			Si*	S125Ø
96#	S15ER30	1.2k†	44	125B	250	20m		140B	1.1	44			16m		1.5k			Si*	S124Ø
97#	25AN120	1 2k	45	20A	700	10m		140B	700mØ	40	25A		20m	120J	1.2k			Si	S241aØ#
98♦#	SKN45/12	1.2k	45	125C	600 §	10m		180A	1.2 §	60	25J	300u			840			Si	S171tØ
99#	SL1203A,K	1 2k†	50	100C	150		10	150C	1.2	10	25C	50u	1.5m	150C	1.2k			Si∆	DO4Ø
100#	1S1616	1.2k	50	130C	2.0k	10m		175J	1.35	200	25J		10m	175J	1.2k	1.9k		Si	S168b
101#	S12AN55	1 2k	55	125B	935			150J	500mØ	55			6.0m		1.2k			Si∆	Ø
102#	S12BN55	1.2k	55	125B	935			150J	500mØ	55			6.0m		1 2k			Si∆	S322Ø
103#	S12GN55	1.2k	55	125B	935			150J	500mØ	55			6 0m		1.2k			Si∆	S322Ø
104#	SB1201K	1.2k	60	85C	700	10m		150J	1 7	210	25A	200u	3 0m	150C	1.2k			Si∆	S168aØ
105#	SBT1201K	1.2k	60	85C	700	10m		150J	1.7	210	25A	200u	3.0m	150C	1.2k			Si∆	S168aØ
106#	KS1260	1 2k	60	110C	1 5k	10m	67	150C	1 2	60 †	25		5.0m	125C	1.2k			Si∆	S245
107#	45AR120	1 2k	70	25A	1 1k	10m		140B	70 Ø	90	25A		25m	120J	1.2k			Si	S8j#
108#	SR70C24	1.2k	70	119C	1.5k§	8.3m		150J	1 6	220	25C		30m	150J	1.2k			Si∆	S333
109#	S12AN71	1.2k	70	120B	1 2k			150J	470mØ	70			6.0m		1 2k			Si∆	Ø
110#	S12BN71	1 2k	70	120B	1.2k			150J	470mØ	70			6.0m		1.2k			Si∆	S323Ø

SYMBOLS AND CODES EXPLAINED IN INTERPRETER

5. RECTIFIERS

IN ORDER OF (1) PIV, (2) MAX AVG FWD CURRENT (3) TEMPERATURE, and (4) TYPE No.

LINE No.	4 TYPE No.	1 PIV (V)	MAX AVG FWD DC CURRENT 2 Io (A)	3 at TEMP (°C)	MAX RATINGS @ 25°C SURGE CUR. PEAK 1 Cy (A)	PULSE WIDTH (s)	DISS. (W)	MAX. TEMP (°C)	MAXIMUM FORWARD VOLTAGE DROP Vf (V)	at If (A)	at TEMP (°C)	MAX. REVERSE CURRENT Ir @25°C & Vr (A)	Ir at T & Vr (A)	TEMP T (°C)	TEST VOLT Vr (V)	AVALANCHE RATINGS MAX V BKDN. (V)	MIN SLOPE (A/V)	MAT.	DESCRIPTION DWG. No.
1#	S12GN71	1.2k	70	120B	1 2k			150J	470mØ	70			6.0m		1 2k			Si△	S322Ø
2	JAN1N3295,R	1 2k	75	150C	1 6k	8.3m		200C	1.4	235	25C		10m	200C	1.0k			Si	Z20
3#	8C12	1 2k†	80	100J	1.2k		100	150J	1.3	80	100C		5.0mØ	25J	1.2k			Si*	S110a
4#	70BN120	1.2k	100	40A	1 8k	10m		140B	70 Ø	130	25A		30m	120J	1.2k			Si	S8kØ#
5▼#	101F12S	1 2k	100	50C	1 6k			175J	1 6	500	25	5.0m		175J	1 2k			Si	S357
6#	10C12	1.2k†	100	100J	1.5k		120	150J	1 2	100	100C		5.0mØ	25J	1 2k			Si*	S110a
7#	BYX32/1200	1.2k	100	125B	1.6k	10m		190	1.7	500 †	190J		8.0m	175	1.2k			Si△	S203bØ
8♦#	SKN100/12	1 2k	100	125C	1 5k§	10m		180A	1 0 §	48	25J	500u			840			Si	S171v
9	1N3296	1.2k	100	130C	1.6k	8.3m		200C	1.5	100	130C		9 0m	130B	1.2k			Si	DO8
10	1N3296A	1.2k	100	130C	2.3k			200C	1 25	100	130C		9.0m	130C	1.2k			Si	DO8
11	1N3296R	1 2k	100	130B	1.6k			200A	900m	100	130B		8.0	200J	1.2k			Si	DO8
12	A70PB	1.2k	100	130B	1.6k	8.3m		200J	600mØ	100	130B		3.5m	130B	1.2k			Si	DO8
13	A71PB	1 2k	100	130B	1.6k	8.3m		200J	600mØ	100	130B		3 5m	130B	1.2k			Si	DO8
14	150L120A	1 2k†	100	150C	3.0k§	8.3m		200J	1 2	150 †	150C		7mØ	150C	1.2k			Si*	DO30Ø
15#	AS12Ø	1 2k	100	150	4.0k	20m		150										Si	
16#	S12P1200E	1.2k	110	75C	2.0k	10m		175J	1.35	300	25A	1.0m	15m	175C	1.2k			Si△	F56m
17#	S10N1200E3	1 2k	125	100C			160	150	97	125	100C	6.0m	20m	100C	1 2k			Si	F56m
18#	S10N1200E4	1.2k	125	100C			160	150	1 03	125	100C	6.0m	20m	100C	1.2k			Si	F56m
19#	S10N1200E5	1.2k	125	100C			160	150	1 08	125	100C	6.0m	20m	100C	1.2k			Si	F56m
20#	125BN120	1.2k	130	20A	3.0k	10m		140B	700mØ	180	25A		40m	120J	1.2k			Si	S120aØ#
21♦#	SKN130/12	1.2k	130	125C	2.0k§	10m		180A	1.0 §	60	25J	500u			840			Si	S171uØ
22#	S11P1200E	1 2k	150	75C	2.2k	10m		175J	1 35	300	25A	1.0m	15m	175C	1.2k			Si△	F56m
23#	SD1203K	1 2k	150	75C	2.2k	10m		175J	1.35	300	25A	1.0m	15m	175C	1.2k			Si△	
24♦#	15C12	1.2k	150	90C	2.0k	10m		150S	1.5	150	40A	6.0m	30m	150	1.2k			Si	S12j
25	1N4595	1.2k	150	110	3.0k			200A	1.4	150	110		12m	200	1 2k			Si	DO8Ø
26#	S12PN125	1.2k%	150	110B	3.3k			150J	1.1	150			30m		1.2k			Si*	S319Ø
27#	S12BR125	1.2k%	150	115B	3.3k			150J	1.1	150			40m		1.2k			Si*	F19
28#	BYX14/1200	1.2k	150	125C	3.0k	10m	240	190J	1.8	750	175C		15m	175C	600			Si	M294Ø
29#	S12KN125	1.2k%	150	125B	3.3k			150J	1.1	150			30m		1.2k			Si*	F80Ø
30#	S12LN125	1.2k%	150	125B	3.3k			150J	1.1	150			30m		1 2k			Si*	M521Ø
31	1N5162	1 2k	150	150	3.0k			200A	1 2 †	150	150		40m	200	960			Si	DO30
32	150K120A	1.2k†	150	150C	3.0k§	8 3m		200J	1.2	150 †	150C		7mØ	150C	1.2k			Si*	DO8Ø
33	ST5	1 2k	160	110C	3.8k	10m	190	150C	1 3	160 †	25		4 0m	125C	1.2k			Si△	S245a
34	JAN1N3273,R	1 2k	160	125	2.0k	8 3m		175C	1 4 †	500	25	80m	15m	150	1.0k			Si	DO9Ø
35	1N3274	1.2k†	160	125C	2 0k			190J	1.25	160	125C		12m	125C	1 2k			Si	DO9
36♦#	SKN170/12	1 2k	170	125C	3.0k§	10m		180A	1.0 §	80	25J	700u			840			Si	S171w
37#	S15AN125	1.2k†	175	125B	1 1k	20m		150B	1.1	175			30m		1.5k			Si	F19
38	JAN1N3174,R	1 2k	175	150C	3.0k	8 3m		175C	1.4 †	750	25	50m	30m	175C	1.0k			Si	DO9Ø
39#	200BN120	1.2k	180	20A	7.5k	10m		140B	700mØ	240	25A		40m	120J	1.2k			Si	S120aØ#
40#	S13N1200E	1 2k	190	75C	2.5k	10m		175J	1.35	300	25A	1.0m	15m	175C	1 2k			Si△	F56m
41#	S20P1200JA	1.2k	200	100C	4.0k	10m		175J	1.25	600	25A		30m	175C	1.2k			Si△	
42#	T25Ø	1.2k	200	110C	3 8k	10m	240	150C	1.3	200 †	25		4.0m	125C	1.2k			Si△	S246
43#	S12BN200	1.2k%	200	120B	4 0k		250	150B	.60 Ø	190	25B		40m	125C	1.2k			Si	F19a
44	411ZD	1.2k	200	130	3.0k	8.3m		200J	1.5	125	130C		8.0mØ	130C	1.2k			Si	DO8
45#	20C12	1.2k	220	100C$	3.3k	10m		150	1.2	220	25		5.0m	25	1 2k			Si	S184
46#	SR200P24	1.2k	240	75C	5.0k§	8.3m		150J	1.73	750	25C		30m	150J	1.2k			Si△	S298Ø
47	1N3175	1 2k	240	100C	3.0k			150J	1 4				15mØ	100J	1.2k			Si	DO9
48♦#	SKN240/12	1.2k	240	125C	5.0k§	10m		180A	1 0 §	125	25J	1.0m			840			Si	S171wØ
49	240E120	1.2k	240	150C	7.5k	4.0m		190J	1 0	240	25C		50m	25C	1.2k			Si	S83AØ
50	240F120	1.2k	240	150C	7.5k	4 0m		190J	1 0	240	25C		50m	25C	1.2k			Si	M56aΔØ
51♦#	25C12	1 2k	250	90C	4.0k	10m		150S	1.5	250	90C	8.0m	45m	150	400			Si	S184
52	DRS252	1.2k	250	100C$	4.5k	8.3m		175J	.55	250	110	2.0m	10m	175J	1 2k			Si	S210aØ
53#	1S742R	1.2k	250	105B	4.5k			175J	1.45	1 0k	25J		25m	175J	1.2k			Si△	S12g
54▼#	1S2257	1 2k	250	111C	5 0k§	8 3m		150J	1.75	780	25C		30m	150J	1.2k			Si△	M567
55#	FD250A24	1.2k	250	111C	5 0k§	8.3m		150J	1.75	780	25C		30m	150J	1.2k			Si△	M567
56#	BYX33/1200	1.2k	250	125B	4 0k	10m		190J	1.8	1.2k	190J		20m	175J	1.2k			Si△	M294Ø
57	1N3743	1.2k	250	130C	4.5k	8.3m		200C	1.1 △	250	130C		7.0m	130B	1.2k			Si	DO9Ø
58	A90PB	1.2k	250	130B	4.5k	8 3m		200J	400mØ	250	130B		7.0m	130B	1 2k			Si	DO9
59	A91PB	1.2k	250	130B	4.5k	8.3m		200J	400mØ	250	130B		7.0m	130B	1.2k			Si	DO9
60	275E120	1.2k	275	150C	7.5k	4.0m		190J	1 0	275	25C		50m	25C	1.2k			Si	S83AØ
61	275F120	1.2k	275	150C	7 5k	4.0m		190J	1 0	275	25C		50m	25C	1.2k			Si	M56aΔØ
62#	S20N1500JA	1.2k	285	70C	4 5k	10m		150J	1 25	600	25A	5.0m	30m	150C	1 2k			Si△	M378Ø
63#	S20N1600JA	1.2k	285	70C	4.5k	10m		150J	1.25	600	25A	5.0m	30m	150C	1.2k			Si△	M378Ø
64#	S12EN270	1 2k%	290	125B	1.5k	20m		160B†	975	340			50m	125B	1.2k			Si*	M307
65#	S12FN270	1.2k%	290	125B	1 5k	20m		160B†	975	340			50m	125B	1.2k			Si*	M357c
66#	S12GN270	1.2k%	290	125B	1.5k	20m		160B†	.975	340			50m	125B	1.2k			Si*	M357a
67♦#	S12HN270	1.2k%	290	125B	7.2k	10m		160B†	975m	340			50m	125B	1 2k			Si*	M366a
68#	40C12	1 2k	300	100C	5 0k	10m		150J		400			10m	25J				Si*	M366
69	S12EN301	1.2k	300	100B	5.1k	10m	410	100B	.65 Ø	300	100B		35m	100B	1.2k			Si	M307
70	S12FN301	1 2k	300	100B	5.1k	10m	410	100B	.65 Ø	300	100B		35m	100B	1.2k			Si	M248
71	S12GN301	1.2k	300	100B	5.1k	10m	410	100B	.65 Ø	300	100B		35m	100B	1.2k			Si	M248a
72	S12HN301	1.2k	300	100B	5.1k	10m	410	100B	.65 Ø	300	100B		35m	100B	1.2k			Si	M370
73#	TA3012R	1.2k	300	100C	6.0k	10m			1 4	1.0k			15m	150C	1.2k				S316
74#	T35Δ	1.2k	300	105C	5 0k	10m	350	150C	1.3	300 †	25		4.0m	125C	1.2k			Si△	S246
75▼#	YSD212P12K38	1.2k	300	105B	6.6k	10m		185J	1 21	1.0k	150J		23m	185J	1.2k			Si	S365
76	300U120A	1.2k†	300	120C	5 0k§	8.3m		200J	1.4	300 †	120C		7mØ	120C	1.2k			Si*	DO9Ø
77	301U120	1.2k†	300	120C	6 2k§	8.3m		200J	1 62	300 †	120C		20mØ	120C	1.2k			Si△	DO9
78	301UR120	1.2k†	300	135C	6.2k§	8.3m		200J	1.62	300 †	135C		20mØ	135C	1.2k			Si△	DO9
79#	30C12	1.2k	300	150	4.5k							810m	4.5	150	1.5				
80#	S12EN290	1.2k%	310	125B	1.6k	20m		160B†	.975	340			50m	125B	1.2k			Si*	M307
81#	S12FN290	1.2k%	310	125B	1.6k	20m		160B†	.975	340			50m	125B	1.2k			Si*	M357c
82#	S12GN290	1.2k%	310	125B	1.6k	20m		160B†	.975	340			50m	125B	1 2k			Si*	M357a
83♦#	S12HN290	1.2k%	310	125B	7.2k	10m		160B†	975m	340			50m	125B	1.2k			Si*	M366a
84#	S30N1300JA3	1.2k	320	100C	4.8k	10m		175J	1.15	600	25A	2 0m	30m	175C	1.2k			Si△	M378
85#	S30N1300JA4	1.2k	320	100C	4 8k	10m		175J	1.25	600	25A	2.0m	30m	175C	1.2k			Si△	M378
86♦#	SKN320/12	1.2k	320	125C	8.0k§	10m		180A	1.0	200	25J	1 5m			840			Si	S17x
87#	S12EN310	1.2k%	330	125B	1 7k	20m		160B†	.90	400			50m	125B	1.2k			Si*	M307
88#	S12FN310	1.2k%	330	125B	1 7k	20m		160B†	90	400			50m	125B	1.2k			Si*	M357c
89#	S12GN310	1.2k%	330	125B	1.7k	20m		160B†	.90	400			50m	125B	1.2k			Si*	M357a
90#	S12HN310	1.2k%	330	125B	1.7k	20m		160B†	.90	400			50m	125B	1.2k			Si*	M366a
91#	S12EN300	1.2k%	340	125B	2.0k	20m		160B	900m	340			50m	125	1.2k			Si*	M307
92▼#	S12HN300	1.2k%	340	125B	7 2k	10m		160B	900m	340			50m	125	1.2k			Si*	M307
93#	300QD11	1.2k	350	90B	6.5k	10m		150J	1.42	1k	25A		20m	150J	1.2k			Si	S12b
94#	S12EN350	1.2k%	370	125B	2.0k	20m		160B†	.90	400			50m	125B	1.2k			Si*	M307
95#	S12FN350	1.2k%	370	125B	2.0k	20m		160B†	.90	400			50m	125B	1.2k			Si*	M357c
96#	S12GN350	1.2k%	370	125B	2.0k	20m		160B†	.90	400			50m	125B	1.2k			Si*	M357a
97♦#	S12HN350	1.2k%	370	125B	7.8k	10m		160B†	900m	400			50m	125B	1.2k			Si*	M366a
98	CH1512	1.2k	375	120C	5.3k	8.3m		200S	1.45	375	140C		10m	120C	1.2k	1.5k		Si	DO9Ø
99#	SR400C24	1.2k	400	100C	10k§	8.3m		150J	1.40	1.2k	25C		30m	150J	1.2k			Si△	S310
100▼#	BYX51-1200	1.2k	400	115C	6.0k§	10m		190J	1.5	1.2k	25J		30m	175J	1.2k			Si△	M294bØ
101#	300QD11A	1.2k	400	132B	6.0k	10m		200J	1.42	1.0k	25A		30m	200J	1.2k			Si	S12b
102	A390PB	1.2k	400	145	4 5k			200J	.40	400	130C		8.0m	130C	1.2k			Si△	M377a
103	400E120	1.2k	400	150C	12k	4.0m		190J	1.1	450	25C		75m	25C	1.2k			Si	S83aΔØ
104▼#	YSD211P12K38	1.2k	410	105B	6.6k	10m		185J	1.21	1.0k	150J		23m	185J	1.2k			Si	S365
105	450E120	1.2k	450	150C	12k	4.0m		190J	1.1	450	25C		75m	25C	1.2k			Si	S83aΔØ
106♦	471PD120	1.2k†	470	105C	6.2k§	8.3m		200J	2.0	470 †	105C		20mØ	105C	1.2k			Si△	J200a
107	783ZD	1.2k	485	130C	5.0k	8.3m		190J	1.9	400	130C		10mØ	130C	1.2k			Si	
108#	S11GR311	1.2k	490	100B	7.5k			175J	670mØ	490			25m		1.2k			Si△	M522
109#	S12HR311	1.2k	490	100B	7.5k			175J	670mØ	490			25m		1.2k			Si△	M523
110	501V120	1.2k	500	105C	8.0k§	8.3m		200J	1.45	500 †	105C		16mØ	105C	1.2k			Si△	S120gØ

SYMBOLS AND CODES EXPLAINED IN INTERPRETER

5. RECTIFIERS

IN ORDER OF (1) PIV, (2) MAX AVG FWD CURRENT (3) TEMPERATURE, and (4) TYPE No.

LINE No.	4 TYPE No.	1 PIV (V)	MAX AVG FWD DC CURRENT 2 Io (A)	3 at TEMP (°C)	MAX RATINGS @ 25°C SURGE CUR. PEAK 1 Cy (A)	PULSE WIDTH (s)	DISS. (W)	MAX. TEMP (°C)	MAXIMUM FORWARD VOLTAGE DROP Vf (V)	at If (A)	at TEMP (°C)	MAX. REVERSE CURRENT Ir @25°C & Vr (A)	Ir at T & Vr (A)	TEMP T (°C)	TEST VOLT Vr (V)	AVALANCHE RATINGS MAX V BKDN. (V)	MIN SLOPE (A/V)	MAT.	DESCRIPTION DWG. No.
1	501V120B	1.2k	500	120C	10k§	8 3m		200J	1.2	500 †	120C		16mØ	120C	1.2k			Si△	S120g⊘
2	501VR120	1.2k	500	120C	8.0k§	8.3m		200J	1.45	500 †	120C		16mØ	120C	1.2k			Si△	S120g⊘
3#	150MA120	1.2k	500	129B	9.0k	10m		175A	1.5 †	1.5	175J		50m		1.2k			Si	S8p
4#	1S1336R	1.2k	500	130B	9.0k			175J	1.4	1.5k	25J		30m	175J	1.2k			Si△	S12h
5	500UDF120A	1.2k†	500	130C	9.0k§	8.3m		200J	1.35 †	500 †	130C		30m	130C	1.2k			Si	M448$
6	A295PB	1 2k	500	130C	7.0k	8 3m		200J					15mØ	130C				Si	S132a
7	A296PB	1.2k	500	130C	7.0k	8.3m		200J					15mØ	130C				Si	S247
8	501VR120B	1 2k	500	135C	10k§	8.3m		200J	1.2	500 †	135C		16mØ	135C	1.2k			Si△	S120g⊘
9▼#	1S2251	1.2k	600	93C	10k§	8.3m		150J	1.85	1 9k	25C		30m	150J	1.2k			Si△	M565
10#	FD500D24	1.2k	600	93C	10k§	8.3m		150J	1.85	1.9k	25C		30m	150J	1.2k			Si△	M565
11▼#	SiB300P12K35	1.2k	600	105B	8.4k	10m		185J	1.15	1.0k	150J		20m	185J	1.2k			Si	S367
12▼#	Si250P12K38	1.2k	630	105B	6.0k	10m		185J	1.22	1.0k	150J		23m	185J	1.2k			Si	S364
13#	S9K1303K5	1 2k	640	85C	8.0k	10m		175J	1.35	1.2k	25A	2.0m	50m	175C	1.2k			Si△	⊘
14	784ZD	1.2k	650	150C	8.0k	8.3m		190J	1.3	500	150C		10m⊘		1.2k			Si	
15#	S9K1303K45	1 2k	660	85C	9.0k	10m		175J	1.3	1 2k	25A	2.0m	50m	175C	1.2k			Si△	⊘
16#	S9K1303K4	1.2k	680	85C	9.0k	10m		175J	1.25	1.2k	25A	2.0m	50m	175C	1.2k			Si△	⊘
17#	S10BR503	1.2k%	685	100B	10k			165J	675mØ	650			20m		1.0k			Si△	M429
18▼#	SiG300P12K35	1.2k	700	105C	8.4k	10m		185J	1.15	1.0k	150J		28m	185J	1 2k			Si	S372
19#	S9K1303K35	1.2k	720	85C	10k	10m		175J	1.2	1.2k	25A	2.0m	50m	175C	1.2k			Si△	⊘
20#	S9K1303K3	1 2k	750	85C	10k	10m		175J	1.15	1.2k	25A	2.0m	50m	175C	1.2k			Si△	⊘
21#	S12BR502	1 2k	750	100B	11k	10m	900	165J	625mØ	700			20m	100B	300			Si△	M429
22	A500PB	1.2k	800	95C	8 4k	8.3m		175J	1.36 Ø	1.0k	150C		30m	175J	1.2k			Si	M463
23▼#	1S2261	1.2k	800	101C	14k§	8.3m		150J	1.65	2.5k	25C		30m	150J	1.2k			Si△	M404
24#	FD1000A24	1.2k	800	101C	14k§	8 3m		150J	1 65	2.5k	25C		30m	150J	1.2k			Si△	M509
25#	V2059R	1.2k	800	103C	12k	20m		150J	1.6	2.5k	25	10m	25m	150J	1.2k				M484
26♦	801PD120	1.2k†	800	120C	8 0k§	8 3m		200J	1.8	800 †	120C		16mØ	120C	1.2k			Si△	J200b
27♦	801PD120B	1.2k†	800	135C	10k§	8.3m		200J	1.4	800 †	135C		16mØ	135C	1.2k			Si△	J200b
28	A540PB	1.2k	1.0k		10k			200J	1 08		150C		50m	200J	1.3k			Si△	M463
29	10R13B	1.3k	.10	25	60			175	4.0	.10	25	5.0u	.50m	150	1.3k			Si	
30	1N2778	1.3k	.75	25A$	15			165S	1 8	.75	25A	4.0u	10m	150	1.3k			Si	A145
31	75R13B	1.3k	.75	25	60			175	4.0	75	25	5.0u	.50m	150	1.3k			Si	
32	100R13B	1.3k	1.0	25	60			175	4.0	1 0	25	5.0u	50m	150	1.3k			Si	
33#	BY103⊘	1.3k	1.0 Ø	50A	50			150J	1.3	2.0	25J	5.0u			1.3k			Si△	DO13
34#	BY133	1.3k	1.0 Ø	50A	50			150J	1 3	2.0	25J	5.0u			1.3k			Si△	A171d
35▼#	TD13	1.3k	1 0	60A	60	10m		140J	1.5	2.0	25A	10u			1.3k			Si	A268b
36	150R13B	1.3k	1 5	25	60			175	4 0	1.5	25	5 0u	.50m	150	1.3k			Si	
37	S12130	1.3k	1 6	120C	35		15 Ø⊘	175J	1 0 Ø	1 0	25A		.10mØ	100C	1.3k	1.8k		Si△	DO13△
38	200R13B	1.3k	2 0	25	60			175	4 0	2.0	25	5 0u	.50m	150	1.3k			Si	
39♦#	SKA1/12	1.3k	2 0	25A	90	10m		150J	900m§	1.2	25J	2.0uØ			1.3k	2.1k		Si	S170c
40	250R13B	1 3k	2.5	25	250			175	4.0	2.5	25	10u	1.0m	150	1 3k			Si	
41	300R13B	1 3k	3 0	25	250			175	4.0	3 0	25	10u	1.0m	150	1.3k			Si	
42#	S13BR2	1.3k%	3 0	95B	53	20m		130B	550mØ	1.5	25		2.0m	125	1.3k			Si	S81
43	350R13B	1.3k	3 5	25	250			175	4.0	3.5	25	10u	1.0m	150	1.3k			Si	
44	400R13B	1.3k	4.0	25	250			175	4.0	4.0	25	10u	1.0m	150	1.3k			Si	
45♦#	SKA2.5/12	1.3k	4.0	25A	120	10m		150J	900m§	2.5	25J	2.0uØ			1.3k	2.1k		Si	S352b
46	450R13B	1.3k	4 5	25	250			175	4.0	4.5	25	10u	1.0m	150	1.3k			Si	
47	500R13B	1.3k	5.0	25	250			175	4 0	5.0	25	10u	1.0m	150	1.3k			Si	
48	550R13B	1.3k	5.5	25	250			175	4.0	5.5	25	10u	1 0m	150	1.3k			Si	
49	600R13B	1 3k	6.0	25	250			175	4 0	6 0	25	10u	1.0m	150	1.3k			Si	
50♦#	SKA5/12	1 3k	12	45A	180m	10m		150J	900m§	6.0	25J	15uØ			1.3k	2.1k		Si	S171r
51#	S13AN15	1 3k	15	120B	220			150J	490mØ	15			3.0m		1 3k			Si△	A31d⊘
52#	S13BN31	1.3k	30	120B	347			150J	600mØ	30			4 0m		1.3k			Si△	S321⊘
53#	S13BN40	1 3k	40	120B	485			150J	500mØ	40			4.0m		1 3k			Si△	S321⊘
54#	S13BN55	1.3k	55	125B	935			150J	500mØ	55			6.0m		1 3k			Si△	S323⊘
55#	S13GN55	1 3k	55	125B	935			150J	500mØ	55			6.0m		1 3k			Si△	S322⊘
56#	S13BN71	1.3k	70	120B	1.2k			150J	470mØ	70			6 0m		1 3k			Si△	S323⊘
57#	S13GN71	1 3k	70	120B	1.2k			150J	470mØ	70			6.0m		1.3k			Si△	S322⊘
58#	S12P1300E	1 3k	110	75C	2.0k	10m		175J	1.35	300	25A	1 0m	15m	175C	1.3k			Si△	F56m
59#	S10N1300E3	1 3k	125	100C			160	150	.97	125	100C	6 0m	20m	100C	1.3k			Si	F56m
60#	S10N1300E4	1 3k	125	100C			160	150	1 03	125	100C	6 0m	20m	100C	1 3k			Si	F56m
61#	S10N1300E5	1.3k	125	100C			160	150	1.08	125	100C	6 0m	20m	100C	1 3k			Si	F56m
62#	S11P1300E	1 3k	150	75C	2 2k	10m		175J	1.35	300	25A	1.0m	15m	175C	1 3k			Si△	F56m
63#	SD1303K	1 3k	150	75C	2.2k	10m		175J	1.35	300	25A	1.0m	15m	175C	1 3k			Si△	
64#	S13PN125	1 3k%	150	110B	3.3k			150J	1.1	150			30m		1.3k			Si*	S319⊘
65#	S13BR125	1 3k%	150	115B	3 3k			150J	1 1	150			40m		1.1k			Si*	F19
66#	S13AN125	1.3k%	150	125B	1 0k		189	125B	.44	150	125		30m	125B	1 0k			Si	F19a
67#	S13KN125	1.3k%	150	125B	3.3k			150J	1.1	150			30m		1 3k			Si*	F80⊘
68#	S13LN125	1.3k%	150	125B	3.3k			150J	1 1	150			30m		1.3k			Si*	M521⊘
69#	S13N1300E	1 3k	190	75C	2 5k	10m		175J	1 35	300	25A	1.0m	15m	175C	1.3k			Si△	F56m
70#	S20P1300JA	1 3k	200	100C	4 0k	10m		175J	1.25	600	25A		30m	175C	1.3k			Si△	
71#	S13BN200	1 3k%	200	120B	1 3k		260	120	.42	200	120		40m	120B	1.0			Si	F19a
72	A291PC	1.3k	250	130C	4 5k			200J					10mØ	130C	1.3k			Si	S132a
73#	S13EN270	1.3k%	290	125B	1 5k		303	125B	.575	290	125B		50m	125B	1.0k			Si*	M307
74♦#	S13HN270	1 3k%	290	125B	7 2k	10m		160B†	975m	340			50m	125B	1.3k			Si*	M366a
75	S13EN301	1 3k	300	100B	5 1k	10m	410	100B	.65 Ø	300	100B		35m	100B	1.3k			Si	M307
76	S13FN301	1.3k	300	100B	5 1k	10m	410	100B	65 Ø	300	100B		35m	100B	1.3k			Si	M248
77	S13GN301	1 3k	300	100B	5 1k	10m	410	100B	.65 Ø	300	100B		35m	100B	1.3k			Si	M248a
78	S13HN301	1.3k	300	100B	5 1k	10m	410	100B	65 Ø	300	100B		35m	100B	1.3k			Si	M370
79#	S17EN301	1.3k†	300	100B	1 6k	20m		150B†	67	340			35m	100B	1.3k			Si*	M307
80#	S17FN301	1 3k†	300	100B	1 6k	20m		150B†	67	340			35m	100B	1.3k			Si*	M357b
81#	S17GN301	1.3k†	300	100B	1 6k	20m		150B†	67	340			35m	100B	1.3k			Si*	M357
82#	S17HN301	1.3k†	300	100B	1 6k	20m		150B†	67	340			35m	100B	1.3k			Si*	M370
83#	S13EN290	1.3k%	310	125B	1 6k		332	125B	60	310	125B		50m	125B	1.0k			Si*	M307
84#	S13FN290	1.3k%	310	125B	1 6k	20m		160B†	.975	340			50m	125B	1.3k			Si*	M357c
85#	S13GN290	1.3k%	310	125B	1.6k	20m		160B†	.975	340			50m	125B	1.3k			Si*	M357a
86♦#	S13HN290	1 3k%	310	125B	7 2k	10m		160B†	975m	340			50m	125B	1.3k			Si*	M366a
87#	S30N1400JA3	1.3k	320	100C	4.8k	10m		175J	1.15 .	600	25A	2.0m	30m	175C	1.3k			Si△	M378
88#	S30N1400JA4	1 3k	320	100C	4 8k	10m		175J	1.25	600	25A	2.0m	30m	175C	1.3k			Si△	M378
89#	S13EN310	1.3k%	330	125B	1 7k	20m		160B†	.90	400			50m	125B	1.3k			Si*	M307
90#	S13FN310	1 3k%	330	125B	1 7k	20m		160B†	.90	400			50m	125B	1.3k			Si*	M357c
91#	S13GN310	1.3k%	330	125B	1 7k	20m		160B†	90	400			50m	125B	1.3k			Si*	M357a
92#	S13HN310	1 3k%	330	125B	1 7k	20m		160B†	.90	400			50m	125B	1.3k			Si*	M366a
93#	S13GR312	1 3k	340	100B	5.1k			155J	750mØ	340			25m		1 3k			Si△	M522
94#	S13HR312	1.3k	340	100B	5 1k			155J	750mØ	340			25m		1.3k			Si△	M523
95#	S13EN300	1.3k%	340	125B	2 0k	20m		160B	900m	340			50m	125	1 3k			Si*	M307
96▼#	S13HN300	1.3k%	340	125B	7.2k	10m		160B	900m	340			50m	125	1.3k			Si*	M307
97#	S13GR313	1 3k	360	100B	5 4k			155J	700mØ	360			25m		1.3k			Si△	M522
98#	S13HR313	1.3k	360	100B	5.4k			155J	700mØ	360			25m		1.3k			Si△	M523
99#	S13EN350	1 3k%	370	125B	2 0k	20m		160B†	.90	400			50m	125B	1.3k			Si*	M307
100#	S13FN350	1 3k%	370	125B	2.0k	20m		160B†	.90	400			50m	125B	1.3k			Si*	M357c
101#	S13GN350	1.3k%	370	125B	2 0k	20m		160B†	.90	400			50m	125B	1.3k			Si*	M357a
102♦#	S13HN350	1 3k%	370	125B	7 8k	10m		160B†	900m	400			50m	125B	1.3k			Si*	M366a
103#	S12GR311	1 3k	490	100B	7 5k			175J	670mØ	490			25m		1 3k			Si△	M522
104	A295PC	1.3k	500	130C	7.0k	8 3m		200J					15mØ	130C				Si	S132a
105	A296PC	1.3k	500	130C	7 0k	8.3m		200J					15mØ	130C				Si	S247
106#	S9K1403K5	1.3k	640	85C	8 0k	10m		175J	1 35	1 2k	25A	2.0m	50m	175C	1.3k			Si△	⊘
107#	S9K1403K45	1.3k	660	85C	9.0k	10m		175J	1 3	1.2k	25A	2.0m	50m	175C	1.3k			Si△	⊘
108#	S9K1403K4	1 3k	680	85C	9 0k	10m		175J	1 25	1 2k	25A	2.0m	50m	175C	1.3k			Si△	⊘
109#	S11BR503	1.3k%	685	100B	10k			165J	675mØ	650			20m		1.1k			Si△	M429
110#	S9K1403K35	1.3k	720	85C	10k	10m		175J	1 2	1 2k	25A	2.0m	50m	175C	1 3k			Si△	⊘

SYMBOLS AND CODES EXPLAINED IN INTERPRETER

5. RECTIFIERS

IN ORDER OF (1) PIV, (2) MAX AVG FWD CURRENT (3) TEMPERATURE, and (4) TYPE No.

LINE No.	TYPE No. [4]	PIV [1] (V)	MAX AVG FWD DC CURRENT Io [2] (A)	at TEMP [3] (°C)	MAX RATINGS @ 25°C SURGE CUR PEAK 1 Cy (A)	PULSE WIDTH (s)	DISS. (W)	MAX. TEMP (°C)	MAXIMUM FORWARD VOLTAGE DROP Vf (V)	at If (A)	at TEMP (°C)	MAX. REVERSE CURRENT Ir @25°C & Vr (A)	Ir at T & Vr (A)	TEMP T (°C)	TEST VOLT Vr (V)	AVALANCHE RATINGS MAX V BKDN. (V)	MIN SLOPE (A/V)	DESCRIPTION MAT.	DWG. No.
1#	S9K1403K3	1 3k	750	85C	10k	10m		175J	1.15	1.2k	25A	2.0m	50m	175C	1.3k			Si△	Ø
2	A500PC	1.3k	800	95C	8.4k	8.3m		175J	1.36 Ø	1.0k	150C		30m	175J	1 3k			Si	M463
3	A540PC	1.3k	1.0k		10k			200J	1.08		150C		50m	200J	1.4k			Si△	M463
4	10R14B	1 4k	.10	25	60			175	4.0	10	25	5.0u	.50m	150	1.4k			Si	
5#	SH1E	1.4k	15	70A	15	10m		100S	1.0	.30	25A	10u	.20m	100A	1.4k			Si△	A171
6♦	1N2884	1.4k	250m	25A				150S	4.0	250m	25A	500n			1.4k	2 8k		Si	M122a
7♦	1N2885	1.4k	250m	25A				150S	4.0	250m	25A	500n			1 4k	2.8k		Si	A83w
8	1N2357	1.4k	.40	25$	15			150	2.0	65	25	1.0u			1.4k			Si	DO1
9	1N2779	1.4k	.75	25A$	15			165S	1.8	.75	25A	4 0u	.10m	150	1.4k			Si	A145
10	75R14B	1.4k	.75	25	60			175	4.0	75	25	5.0u	.50m	150	1.4k			Si	
11	1N3725	1.4k†	.75	50A	12			175A	2.2	75	50A	5 0u	.50m	150A	1.4k			Si	A1bp
12#	DS0.9-14A	1 4k	1.0		40	10m		150	1.20	3.0		5.0u	1.0m	150					
13#	DSA0.9-14A	1.4k	1 0		35	10m		150	1.20	3.0		5.0u	1.0m	150					
14	1N2362	1.4k	1 0	25C	15			150	2.0	1.5	25	1 0u			1.4k			Si	DO4
15	1N2363	1.4k	1.0	25	15			150	2.0	1.5	25	1.0u			1.4k			Si	S117
16	100R14B	1 4k	1 0	25	60			175	4.0	1.0	25	5.0u	.50m	150	1.4k			Si	
17	SLA1400A	1.4k	1.0	25	60	8.3m		150A	1.0	1.0	25	1.0u	.10m	100	1.4k			Si	A69
18	SLA1400B	1.4k	1.0	25	60	8.3m		150A	1.0	1.0	25	1.0u	.15m	100	1.4k			Si	A69
19	SLA1400C	1.4k	1 0	25	60	8.3m		150A	1.0	1.0	25	5.0u	.25m	100	1.4k			Si	A69
20#	SJ1203H	1.4k	1 0	30A	32	10m		150J	1.0	750m	25A	10u	50u	120A	1.4k			Si△	A31n
21	1B14	1.4k	1 0	50C$	11			150C	2.0	1.0	25	2.0u	.05m	100	1.4k			Si	M79
22	1C14	1.4k	1.0	50C$	11			150C	2.0	1.0	25	2.0u	.05m	100	1 4k			Si	M116a
23	1D14	1 4k	1.0	75C	35			150C	2 0	1.0	50C	2.0u	.05m	100C	1.4k			Si	M116*
24#	SSiB9880A	1.4k	1.2	45A		10m		150J	1.46	6.3	25J		1.0m	150J				Si△	M571a
25#	DS1.2-14A	1.4k	1 3		60	10m		150	1.20	4.0		5.0u	1.0m	150					
26#	DSA1.2-14A	1.4k	1.3		60	10m		150	1.20	4.0		5.0u	1.0m	150					
27	150R14B	1.4k	1.5	25	60			175	4.0	1.5	25	5.0u	.50m	150	1.4k			Si	
28♦	DRS114	1.4k	1.5	50A	50	8 3m		125A	1.0	1.0	25A	10u	200u	125A	1.4k			Si	A168c
29	S12140	1 4k	1.6	120C	35		15 ØØ	175J	1.0 Ø	1.0	25A		.10mØ	100C	1.4k	1.8k		Si△	DO13△
30#	SSiC9980A	1.4k	1 7	45A		10m		150J	1.48	7.8	25J		1.0m	150J				Si△	M571
31	200R14B	1 4k	2.0	25	60			175	4 0	2.0	25	5.0u	.50m	150	1.4k			Si	
32	SLA31A	1 4k	2 0	25	80	8.3m		150A	.95	2.0	25	1.0u	.10m	100	1.4k			Si	A69
33	SLA31B	1.4k	2.0	25	80	8.3m		150A	.95	2.0	25	1.0u	.15m	100	1.4k			Si	A69
34	SLA31C	1.4k	2 0	25	80	8.3m		150A	1 0	2.0	25	5.0u	25m	100	1.4k			Si	A69
35#	DS2-14A	1.4k	2 2		120	10m		150	1.20	3.0		5.0u	1.0m	150					
36#	DSA2-14A	1 4k	2.2		120	10m		150	1.20	3.0		5.0u	1.0m	150					
37	250R14B	1.4k	2.5	25	250			175	4.0	2.5	25	10u	1.0m	150	1.4k			Si	
38	300R14B	1 4k	3 0	25	250			175	4.0	3.0	25	10u	1.0m	150	1.4k			Si	
39	SLA5205	1.4k	3.0	55	300			175	1.0	3.0	25	5.0u	.12m	100	1.4k			SL	A31a
40#	S14BR2	1.4k%	3.0	95B	53	20m		130B	550mØ	1.5	25		2.0m	125	1.4k			Si	S81
41	350R14B	1 4k	3.5	25	250			175	4.0	3.5	25	10u	1.0m	150	1.4k			Si	
42	400R14B	1.4k	4 0	25	250			175	4.0	4.0	25	10u	1.0m	150	1.4k			Si	
43	450R14B	1.4k	4 5	25	250			175	4 0	4.5	25	10u	1.0m	150	1.4k			Si	
44#	SSiD9980A	1.4k	4 7	45A		10m		150J	1.42	15	25J		2 0m	150J				Si△	S344
45	1N2362A	1.4k	5 0	25A	20			150	2 0	8.0	25	1.0u			1.4k			Si	DO4
46	1N2363A	1.4k	5 0	25	20			150	2 0	8.0	25	1.0u			1.4k			Si	S117
47	500R14B	1 4k	5.0	25	250			175	4.0	5.0	25	10u	1.0m	150	1.4k			Si	
48#	DS6-14A	1.4k	5.0	132	180	10m		150	1.35	15		5.0u	2.0m	150					
49#	DSA6-14A	1.4k	5.0	132	180	10m		150	1.35	15		5.0u	2.0m	150					
50	550R14B	1.4k	5.5	25	250			175	4.0	5.5	25	10u	1.0m	150	1 4k			Si	
51	600R14B	1 4k	6.0	25	250			175	4.0	6.0	25	10u	1.0m	150	1.4k			Si	
52#	DS9-14A	1 4k	9.0	125	240	10m			1.3	27									
53#	DSA9-14A	1 4k	9 0	125	240	10m			1 3	27									
54	1N2362B	1 4k	10	25B	25			150	2.0	15	25	1.0u			1.4k			Si	DO4
55	1N2363B	1.4k	10	25C$	25			150	2.0	15	25	1.0u			1.4k			Si	S117
56#	8AN140	1 4k	12	55A	210	10m		140B	.65 Ø	13	25A		10m	120J	1.4k			Si	S4qØ#
57#	S14AN15	1.4k	15	120B	220			150J	490mØ	15			3.0m		1.4k			Si△	A31dØ
58#	SK1403K	1.4k	17.5	85C	230	10m		150J	1.4	50	25A	20u	500u	150C	1.4k			Si△	DO4Ø
59#	SSiE2080A	1 4k	20	85C	250	10m		160J								2.4k		Si△	S4p△
60#	DS22-14A	1.4k	20	125	380	10m		150	1.4	60		10u	4.0m	150					
61#	DSA22-14A	1 4k	20	125	380	10m		150	1.4	60		10u	4.0m	150					
62#	S14BN31	1.4k	30	120B	347			150J	600mØ	30			4.0m		1 4k			Si△	S321Ø
63#	3C14	1.4k	30	150	500							310m	810m	150	1.5				
64#	15AN140	1.4k	34	20A	500	10m		140B	700mØ	25	25A		20m	120J	1.4k			Si	S241aØ#
65#	D22-1400B	1.4k	35	80C	500 §	10m		150J	1.35	40	25J	1 0m		25J	1.4k			Si	S4u%
66#	D22-1400C	1.4k	35	80C	500 §	10m		150J	1.35	40	25J	1.0m		25J	1.4k			Si	S69e%
67#	SUT1401K	1 4k	36	85C	600	10m		150J	1.6	90	25A	200u	3.0m	150C	1.4k			Si△	DO5Ø
68#	K1440	1.4k	40	90C	800	10m		125C	1 2	125	25C		4.0m	125C	1.4k			Si△	S245
69▼#	4C14	1 4k	40	110C	700	10m		150S	1.5	40	40A	3 0m	12m	150	1.4k			Si*	S181
70#	DS42-14A	1.4k	40	120	1.1k	10m		150	1.15	60		20u	4.0m	150					
71#	DSA42-14A	1.4k	40	120	1 1k	10m		150	1.15	60		20u	4.0m	150					
72#	S14BN40	1.4k	40	120B	485			150J	500mØ	40			4.0m		1.4k			Si△	S321Ø
73#	25AN140	1 4k	45	20A	700	10m		140B	700mØ	40	25A		20m	120J	1.4k			Si	S241aØ#
74#	SSiF2080	1.4k	50	85C	500	10m		160J										Si△	S72m△
75#	SSiF2080A	1.4k	50	85C	500	10m		160J								2.4k		Si△	S52c△
76#	D42-1400	1.4k	50	115C	1.0k§	10m		150J	1.15	60	25J	1.0m		25J	1.4k			Si	S171q%
77#	S14BN55	1.4k	55	125B	935			150J	500mØ	55			6.0m		1.4k			Si△	S323Ø
78#	S14GN55	1.4k	55	125B	935			150J	500mØ	55			6.0m		1.4k			Si△	S322Ø
79#	SB1401K	1.4k	60	85C	700	10m		150J	1.7	210	25A	200u	3.0m	150C	1.4k			Si△	S168aØ
80#	SBT1401K	1 4k	60	85C	700	10m		150J	1.7	210	25A	200u	3.0m	150C	1.4k			Si△	S168aØ
81#	KS1460	1.4k	60	110C	1.5k	10m		150C	1.2	190	25C		5.0m	125C	1.4k			Si△	S245
82#	45AR140	1.4k	70	25A	1 1k	10m		140B	.70 Ø	90	25A		25m	120J	1.4k			Si	S8j#
83#	S14BN71	1.4k	70	120B	1.2k			150J	470mØ	70			6.0m		1.4k			Si△	S323Ø
84#	S14GN71	1.4k	70	120B	1.2k			150J	470mØ	70			6.0m		1.4k			Si△	S322Ø
85	JAN1N3296,R	1 4k	75	150C	1.6k	8.3m		200C	1 4	235	25C		8.0m	200C	1.2k			Si	Z20
86#	8C14	1.4k	80	150	1.2k							510m	2.5	150	1.5				
87#	70BN140	1.4k	100	40A	1.8k	10m		140B	.70 Ø	130	25A		30m	120J	1.4k			Si	S8kØ#
88	1N3297	1.4k†	100	130C	1.6k	8.3m		200C	1.2	100	130C		7.0m	130C	1.4k			Si	DO8
89	1N3297A	1 4k	100	130C	2.3k			200C	1.25	100	130C		7.0m	130C	1.4k			Si	DO8
90#	10C14	1.4k	100	150	1.5k							510m	2.5	150	1.5				
91#	S12P1400E	1 4k	110	75C	2 0k	10m		175J	1.35	300	25A	1.0m	15m	175C	1.4k			Si△	F56m
92#	S10N1400E3	1.4k	125	100C			160	150	.97	125	100C	6.0m	20m	100C	1.4k			Si	F56m
93#	S10N1400E4	1 4k	125	100C			160	150	1.03	125	100C	6.0m	20m	100C	1.4k			Si	F56m
94#	S10N1400E5	1.4k	125	100C			160	150	1.08	125	100C	6.0m	20m	100C	1.4k			Si	F56m
95#	125BN140	1.4k	130	20A	3.0k	10m		140B	700mØ	180	25A		40m	120J	1.4k			Si	S120aØ#
96#	S11P1400E	1.4k	150	75C	2.2k	10m		175J	1.35	300	25A	1.0m	15m	175C	1.4k			Si△	F56m
97#	SD1403K	1.4k	150	75C	2 2k	10m		175J	1.35	300	25A	1.0m	15m	175C	1.4k			Si△	
98♦#	15C14	1 4k	150	90C	2 0k	10m		150S	1 5	150	40A	6.0m	30m	150	1.4k			Si	S12j
99	1N4596	1.4k	150	110	3.0k			200A	1.4	150	110		11m	200	1.4k			Si	DO8Ø
100#	S14PN125	1.4k%	150	110B	3 3k			150J	1.1	150			30m		1.4k			Si*	S319Ø
101#	S14BR125	1.4k%	150	115B	3.3k			150J	1.1	150			40m		1.1k			Si*	F19
102#	S14AN125	1.4k%	150	125B	1.0k		189	125B	.44	150	125		30m	125B	1.1k			Si	F19a
103#	S14KN125	1.4k%	150	125B	3.3k			150J	1 1	150			30m		1.4k			Si*	F80Ø
104#	S14LN125	1.4k%	150	125B	3.3k			150J	1 1	150			30m		1.4k			Si*	M521Ø
105	150K140A	1 4k†	150	150C	3.0k§	8.3m		200J	1 2	150 †	150C		5.0mØ	150C	1.4k			Si	DO8
106	150L140A	1 4k†	150	150C	3 0k§	8.3m		200J	1.2	150 †	150C		5.0mØ	150C	1.4k			Si	DO30
107#	DS110-14A	1.4k	160	75	3.2k	10m		150	1.4	500		40u	6.0m	150					
108#	DSA110-14A	1.4k	160	75	3.2k	10m		150	1 4	500		40u	6.0m	150					
109#	SSiK2180	1 4k	160	92C	2.7k	10m		160J	1.3	500	20J	200u	2.0m	150J	300			Si△*	S72m△
110#	SSiK2180A	1.4k	160	92C	2.7k	10m		160J	1.3	500	20J	200u	2.0m	150J	300	1.5kØ		Si△*	S72m△

SYMBOLS AND CODES EXPLAINED IN INTERPRETER

5. RECTIFIERS

IN ORDER OF (1) PIV, (2) MAX AVG FWD CURRENT (3) TEMPERATURE, and (4) TYPE No.

LINE No.	4 TYPE No.	1 PIV (V)	MAX AVG FWD DC CURRENT 2 Io (A)	3 at TEMP (°C)	MAX RATINGS @ 25°C SURGE CUR. PEAK 1 Cy (A)	PULSE WIDTH (s)	DISS. (W)	MAX. TEMP (°C)	MAXIMUM FORWARD VOLTAGE DROP Vf (V)	at If (A)	at TEMP (°C)	MAX. REVERSE CURRENT Ir @25°C & Vr (A)	Ir at T & Vr (A)	TEMP T (°C)	TEST VOLT Vr (V)	AVALANCHE RATINGS MAX V BKDN. (V)	MIN SLOPE (A/V)	MAT.	DESCRIPTION DWG. No.
1#	D100-1400	1.4k	160	95C	1.8k§	10m		150J	1.05	90	25J	3 0m		25J	1.4k			Si	S96b%
2#	ST6	1 4k	160	100C	3.8	10m		150C	1.3	500	25C		4.0m	125C	1.4k			Si△	S245a
3	1N3275	1.4k†	160	125C	2.0k			190J	1.25	160	125C		12m	125C	1.4k			Si	D09
4	JAN1N3175,R	1 4k	175	150C	3.0k	8.3m		175C	1.4 †	750	25	50m	25m	175C	1 2k			Si	D09⧄
5#	200BN140	1 4k	180	20A	7.5k	10m		140B	700mØ	240	25A		40m	120J	1.4k			Si	S120a⧄#
6#	S13N1400E	1.4k	190	75C	2.5k	10m		175J	1.35	300	25A	1 0m	15m	175C	1.4k			Si△	F56m
7#	S20P1400JA	1.4k	200	100C	4.0k	10m		175J	1.25	600	25A		30m	175C	1 4k			Si△	
8#	T26	1 4k	200	110C	3 8	10m		150C	1 3	650	25C		4.0m	125C	1.4k			Si△	S246
9#	S14BN200	1.4k%	200	120B	1.3k		260	120	.42	200	120		40m	120B	1.1k			Si	F19a
10	411ZH	1.4k	200	130	3.0k	8.3m		200J	1.5	125	130C		8 0m⧄	130C	1.4k			Si	D08
11#	SSiK0480	1.4k	210	110C	2.7k	10m		150J	1 3	500	20J	200u	2.0m	150J	300			Si△*	M444#
12#	20C14	1.4k	220	100C	3 5k	10m		150J	1.2	220	40A		5.0m	25	1.4k			Si*	S184
13	1N3176	1.4k	240	100C	3.0k			150J	1.4				15mØ	100J	1.4k			Si	D09
14♦#	25C14	1.4k	250	90C	4.0k	10m		150S	1.5	250	90C	8 0m	45m	150	400			Si	S184
15#	SSiL2080	1.4k	250	94C	4 8k	10m		160J	1.46	785	25J		15	160J				Si△*	S345
16#	SSiL2080A	1.4k	250	94C	4.8k	10m		160J	1.46	785	25J		15m	160J				Si△*	S345
17#	SSiL20100A	1.4k	250	94C	4.8k	10m		160J	1.46	785	25J		15m	160J				Si△*	S345
18	DRS253	1.4k	250	100C$	4.5k	8.3m		175J	.55	250	110	2 0m	10m	175J	1.4k			Si	S210a⧄
19	1N3744	1 4k	250	130C	4 5k	8.3m		200C	1 1 △	250	130C		7.0m	130B	1.4k			Si	D09⧄
20	A291PD	1.4k	250	130C	4.5k			200J					10mØ	130C	1.4k			Si	S132a
21#	S14EN270	1.4k%	290	125B	1.5k		303	125B	.575	290	125B		50m	125B	1.1k			Si*	M307
22#	S14FN270	1.4k%	290	125B	1 5k	20m		160B†	.975	340			50m	125B	1 4k			Si*	M357c
23#	S14GN270	1.4k%	290	125B	1.5k	20m		160B†	.975	340			50m	125B	1.4k			Si*	M357a
24♦#	S14HN270	1.4k%	290	125B	7.2k	10m		160B†	975m	340			50m	125B	1.4k			Si*	M366a
25	S14EN301	1.4k	300	100B	5.1k	10m	410	100B	.65 Ø	300	100B		35m	100B	1.4k			Si	M307
26	S14FN301	1.4k	300	100B	5.1k	10m	410	100B	.65 Ø	300	100B		35m	100B	1.4k			Si	M248
27	S14GN301	1.4k	300	100B	5.1k	10m	410	100B	.65 Ø	300	100B		35m	100B	1.4k			Si	M248a
28	S14HN301	1.4k	300	100B	5.1k	10m	410	100B	.65 Ø	300	100B		35m	100B	1 4k			Si	M370
29#	S18EN301	1.4k†	300	100B	1.6k	20m		150B†	.67	340			35m	100B	1.4k			Si*	M307
30#	S18FN301	1.4k†	300	100B	1.6k	20m		150B†	.67	340			35m	100B	1 4k			Si*	M357b
31#	S18GN301	1.4k†	300	100B	1.6k	20m		150B†	.67	340			35m	100B	1.4k			Si*	M357
32#	S18HN301	1.4k†	300	100B	1.6k	20m		150B†	.67	340			35m	100B	1.4k			Si*	M370
33#	TA3014R	1.4k	300	100C	6.0k	10m			1 4	1.0k			15m	150C	1.4k				S316
34#	T36	1.4k	300	105C	5 0	10m		150C	1.3	1 0k	25C		4.0m	125C	1.4k			Si△	S246
35▼#	YSD212P14K38	1.4k	300	105B	6 6k	10m		185J	1.21	1.0k	150J		22m	185J	1.4k			Si	S365
36	301U140	1.4k†	300	120C	6.2k§	8.3m		200J	1.62	300 †	120C		20m⧄	120C	1.4k			Si△	D09
37	301UR140	1.4k†	300	135C	6 2k§	8 3m		200J	1.62	300 †	135C		20m⧄	135C	1.4k			Si△	D09
38#	30C14	1.4k	300	150	4.5k							810m	4.5	150	1.5				
39#	S14EN290	1.4k%	310	125B	1.6k		332	125B	.60	310	125B		50m	125B	1.1k			Si*	M307
40#	S14FN290	1.4k%	310	125B	1 6k	20m		160B†	.975	340			50m	125B	1.4k			Si*	M357c
41#	S14GN290	1 4k%	310	125B	1 6k	20m		160B†	.975	340			50m	125B	1.4k			Si*	M357a
42♦#	S14HN290	1.4k%	310	125B	7.2k	10m		160B†	975m	340			50m	125B	1.4k			Si*	M366a
43#	SSiL9880	1.4k	320	96C	6.7k	10m		150J	1.35	1.0k	25J		40m	150J				Si△*	M572
44#	S30N1500JA3	1.4k	320	100C	4.8k	10m		175J	1.15	600	25A	2 0m	30m	175C	1.4k			Si△	M378
45#	S30N1500JA4	1.4k	320	100C	4.8k	10m		175J	1.25	600	25A	2.0m	30m	175C	1.4k			Si△	M378
46#	S14EN310	1.4k%	330	125B	1.7k	20m		160B†	.90	400			50m	125B	1.4k			Si*	M307
47#	S14FN310	1.4k%	330	125B	1.7k	20m		160B†	.90	400			50m	125B	1.4k			Si*	M357c
48#	S14GN310	1.4k%	330	125B	1.7k	20m		160B†	.90	400			50m	125B	1 4k			Si*	M357a
49#	S14HN310	1.4k%	330	125B	1.7k	20m		160B†	.90	400			50m	125B	1 4k			Si*	M366a
50#	S14GR312	1.4k	340	100B	5.1k			155J	750mØ	340			25m		1.4k			Si△	M522
51#	S14HR312	1.4k	340	100B	5.1k			155J	750mØ	340			25m		1.4k			Si△	M523
52	CH1513	1.4k	340	120C	4 5k	8.3m		200S	1.6	340	140C		10m	120C	1.4k	1 7k		Si	D09⧄
53#	S14EN300	1.4k%	340	125B	2.0k	20m		160B	900m	340			50m	125	1 4k			Si*	M307
54▼#	S14HN300	1.4k%	340	125B	7.2k	10m		160B	900m	340			50m	125	1 4k			Si*	M307
55#	DSA250-14L	1.4k	350		5.3k	10m	20	150	1 35										
56#	S14GR313	1.4k	360	100B	5.4k			155J	700mØ	360			25m		1.4k			Si△	M522
57#	S14HR313	1.4k	360	100B	5 4k			155J	700mØ	360			25m		1.4k			Si△	M523
58#	S14EN350	1.4k%	370	125B	2 0k	20m		160B†	.90	400			50m	125B	1 4k			Si*	M307
59#	S14FN350	1.4k%	370	125B	2.0k	20m		160B†	90	400			50m	125B	1.4k			Si*	M357c
60#	S14GN350	1.4k%	370	125B	2.0k	20m		160B†	.90	400			50m	125B	1.4k			Si*	M357a
61♦#	S14HN350	1.4k%	370	125B	7 8k	10m		160B†	900m	400			50m	125B	1 4k			Si*	M366a
62#	D250-1400	1.4k	400	80C	5.5k§	10m		150J	1 10	220	25J	5 0m		25J	1.4k			Si	M486%
63#	SSiN2080	1 4k	400	90C	8.0k	10m		160J				200u						Si△	S12a#
64#	SSiN2080A	1 4k	400	90C	8 0k	10m		160J								2.4k		Si△	S12a#
65#	40C14	1 4k	400	150	5 0k							1 5	7 5	150	1.5				
66▼#	YSD211P14K38	1 4k	410	105B	6 6k	10m		185J	1 21	1.0k	150J		22m	185J	1.4k			Si	S365
67#	SSiN9980	1 4k	450	100C	11k	10m		150J	1 25	1 4k	25J		50m	150J				Si△*	M573
68♦	471PD140	1.4k†	470	105C	6 2k§	8.3m		200J	2.0	470 †	105C		20mØ	105C	1.4k			Si△	J200a
69#	DSA400-14L	1 4k	475		8.5k	10m		140	7 20										
70	783ZH	1.4k	485	130C	5 0k	8.3m		190J	1.9	400	130C		10m⧄	130C	1.4k			Si	
71#	D300-1400	1 4k	500	80C	5 5k§	10m		150J	1 20	400	25J	5 0m		25J	1 4k			Si	M486a%
72#	S9K2403A4	1.4k	500	100	9k§	10m		175C	1 4	2k	125J	2.0u	40m	175C	1 4k			△	
73	501V140	1 4k	500	105C	8 0k§	8.3m		200J	1.45	500 †	105C		16mØ	105C	1.4k			Si△	S120g⧄
74	501V140B	1.4k	500	120C	10k§	8.3m		200J	1.2	500 †	120C		16mØ	120C	1 4k			Si△	S120g⧄
75	501VR140	1 4k	500	120C	8 0k§	8.3m		200J	1.45	500 †	120C		16mØ	120C	1 4k			Si△	S120g⧄
76	CH1623	1 4k	500	120C	8.5k	8.3m		180S	1 2	500	140C		15m	120C	1.4k	1 7k		Si	F82⧄
77#	150MA140	1 4k	500	129B	9.0k	10m		175A	1 5 †	1.5	175J		50m		1.4k			Si	S8p
78#	1S1337R	1 4k	500	130B	9.0k			175J	1 4	1.5k	25J		25m	175J	1.4k			Si△	S12h
79	A295PD	1.4k	500	130C	7 0k	8.3m		200J					15mØ	130C				Si	S132a
80	A296PD	1 4k	500	130C	7.0k	8.3m		200J					15mØ	130C				Si	S247
81	501VR140B	1.4k	500	135C	10k§	8.3m		200J	1.2	500 †	135C		16mØ	135C	1.4k			Si△	S120g⧄
82▼#	SiB300P14K35	1 4k	600	105B	8.4k	10m		185J	1 15	1.0k	150J		20m	185J	1.4k			Si	S367
83▼#	Si250P14K38	1.4k	630	105B	6 0k	10m		185J	1.22	1 0k	150J		22m	185J	1.4k			Si	S364
84#	S9K1503K5	1.4k	640	85C	8 0k	10m		175J	1.35	1.2k	25A	2.0m	50m	175C	1.4k			Si△	⧄
85#	S9K1503K45	1.4k	660	85C	9.0k	10m		175J	1.3	1 2k	25A	2.0m	50m	175C	1.4k			Si△	⧄
86#	S9K1503K4	1.4k	680	85C	9.0k	10m		175J	1 25	1.2k	25A	2.0m	50m	175C	1 4k			Si△	⧄
87#	D400-1400	1.4k	700	65C	8.0k§	10m		150J	1.15	400	25J	10m		25J	1.4k			Si	M486b%
88#	D450-1400	1 4k	700	85C	10k§	10m		150J	1.10	500	25J	6 0m		25J	1 4k			Si	M486b%
89▼#	SiG300P14K35	1.4k	700	105C	8.4k	10m		185J	1.15	1.0k	150J		26m	185J	1.6k			Si	S372
90#	S9K1503K35	1.4k	720	85C	10k	10m		175J	1.2	1 2k	25A	2 0m	50m	175C	1.4k			Si△	⧄
91#	S9K1503K3	1 4k	750	85C	10k	10m		175J	1.15	1.2k	25A	2.0m	50m	175C	1.4k			Si△	⧄
92	A500PD	1.4k	800	95C	8 4k	8.3m		175J	1.36 Ø	1 0k	150C		30m	175J	1.4k			Si	M463
93♦	801PD140	1 4k†	800	120C	8 0k§	8.3m		200J	1 8	800 †	120C		16mØ	120C	1.4k			Si△	J200b
94♦	801PD140B	1 4k†	800	135C	10k§	8.3m		200J	1 4	800 †	135C		16mØ	135C	1 4k			Si△	J200b
95	A540PD	1 4k	1 0k		10k			200J	1.08		150C		50m	200J	1.6k			Si△	M463
96#	SSiP0180	1.4k	1 0k	80C	18k	10m		150J	1.3	500	20J	200u	2 0m	150J	300			Si△*	M510#
97	MH401	1.5k	.01	25					2.4	.01	25	.50u	02m	100	1.5k			Si	A1at
98	2L15	1 5k	02	25	10	8.3m		175	2 0	.02	25	5 0u	20m	100	1 5k			Si	A1hy
99	2L159	1 5k	02	25	10	8.3m		175	2 0	02	25	5 0u	20m	100	1 5k	2.2k	200u	Si	A1hy
100	1N590	1.5k	25m	25A				165B	8.0	50m	25A	100u			1.5k			Si	S281a
101	1N591	1 5k	25m	25A				165B	8 0	50m	25A	100u			1 5k			Si	S281
102	SCM15	1.5k	25m	55A	5.0			150A	5.0	25m	25A	100n	2.0u	100A	1 5k			Si	A1ru
103	5L15	1.5k	05	25	10	8.3m		175	2 0	05	25	5 0u	.20m	100	1 5k			Si	A1hy
104	5L159	1 5k	05	25	10	8.3m		175	2.0	.05	25	5 0u	.20m	100	1 5k	2 2k	200u	Si	A1hy
105	VA15	1 5k	50m	40A	3.0	83m		150A	4.0	50m	25	50u	5.0u	100	1.5k			Si△	A1m
106	1N1731A	1 5k	50m	175$	9 0	80m		200A	3.0	400m	25	1 0u	12u	150A	1 5k			Si	A1gd
107	1N1133	1 5k	.075	75	3 5	5.0m		170	15	85m	50		.20m	50	1.5k			Si	F57d
108	P1RP15	1 5k	.075	75A$	15			150S	21	08	25	5.0u			1.5k			Si	A1kj
109	1N2630	1.5k	85m	70$	5 0			100A	2 25 §	85m	100	350uØ			1 5k			Si	M84
110	1N2635	1 5k	85m	70$	5 0			100A	2 25 §	85m	100	350uØ			1 5k			Si	M84d

SYMBOLS AND CODES EXPLAINED IN INTERPRETER

5. RECTIFIERS

IN ORDER OF (1) PIV, (2) MAX AVG FWD CURRENT (3) TEMPERATURE, and (4) TYPE No.

LINE No.	4 TYPE No.	1 PIV (V)	MAX AVG FWD DC CURRENT 2 Io (A)	3 at TEMP (°C)	MAX RATINGS @ 25°C SURGE CUR. PEAK 1 Cy (A)	PULSE WIDTH (s)	DISS. (W)	MAX. TEMP (°C)	MAXIMUM FORWARD VOLTAGE DROP Vf (V)	at If (A)	at TEMP (°C)	MAX. REVERSE CURRENT Ir @25°C & Vr (A)	Ir at T & Vr (A)	TEMP T (°C)	TEST VOLT Vr (V)	AVALANCHE RATINGS MAX V BKDN. (V)	MIN SLOPE (A/V)	MAT.	DESCRIPTION DWG. No.
1	1N2636	1.5k	85m	70$	5.0			100A	2.25	85m	100	350uØ			1.5k			Si	M84e
2	1N3283	1.5k	.10	25A	2 5			150A	2.5	.10	25A	1.0u	.01m	100A	1 5k			Si△	DO7
3	10L15	1.5k	.10	25	20	8 3m		175	2.0	.10	25	5 0u	.20m	100	1.5k			Si	A1hy
4	10L159	1.5k	10	25	20	8 3m		175	2.0	.10	25	5.0u	20m	100	1.5k	2.2k	200u	Si	A1hy
5	10R15B	1.5k	.10	25	60			175	4.0	.10	25	5.0u	.50m	150	1.5k			Si	
6#	HSC015	1.5k	10	25A$				150A	3.0	.10	25A	5.0u			1.5k			Si	A31x
7	PS2418	1.5k	10	25A$					2.0	5m	25A	10u			1 5k			Si	C15
8#	1S1226	1 5k	.10	40A	6 0	10m		100J	1.5 △	.10	25A	5.0u		25J	1.5k			Si△	
9	VB15	1.5k	100m	40A	3.0	8 3m		150A	5.0	100u	25	50n	5.0u	100	1.5k			Si△	A1fc
10	1N588	1 5k	.10	50A	5 0			175A	1 5	10	50	50u	.30m	150	1 5k			Si	DO1
11	EZ150	1.5k	.10	50A	10			125A	9.0	.10	25A	2.0u	100u	100A	1.5k			Si	A3c
12	1N1134	1.5k	.10	75	3.5	5 0m		170	7.5	115m	50		.20m	50	1 5k			Si	F57e
13	1N2375	1 5k	.10	100A	12	8.3m		150A	4.5	.10	100A		100m	100A	600			Si	A1fu
14	1N1410	1.5k	.125	75A$	6.0			150	6.25	1.2	25	10u	.10m	150A	1.5k			Si	A149
15	1N2504	1 5k	15	25A				150A	1.5	.10	25	20u	20m	150	1.5k			Si	A6
16	15L15	1 5k	.15	25	20	8.3m		175	2.0	.15	25	5.0u	.20m	100	1 5k			Si	A1hy
17	15L159	1.5k	.15	25	20	8.3m		175	2.0	.15	25	5.0u	.20m	100	1 5k	2.2k	200u	Si	A1hy
18#	M15HZ	1.5k	150m	25A	2.5	10m		125A	2 0	150m	25A	1.0u	25u	100A	1.5k			Si△	DO7
19	MHV1.5	1.5k	.15	25A$	5.0			125A	4.5	.15	25	1.0u			1.5k			Si	F8
20	1N1731	1 5k	.20	25A$	2.5	8 0m		150A	5.0	.10	25A	10u	10m	100A	1.5k			Si	A1gd
21	20L15	1.5k	.20	25	20	8 3m		175	2.0	.20	25	5 0u	.20m	100	1 5k			Si	A1hy
22	20L159	1 5k	20	25	20	8 3m		175	2.0	.20	25	5.0u	.20m	100	1 5k	2.2k	200u	Si	A1hy
23	7701-1.5A	1.5k	.20	25A	3.0	8.3m		125A	3.0	.05	25	1 0u	10m	125	1 5k			Si△	A1gd
24	HV15E1	1 5k	.20	25	1.0	8.0m	25	125A	1 0	10m	25	20n	3 0u	100	1 5k			Si	A83e
25	HV15P1	1.5k	200m	25	1.0	8.0m	250m	125A	1.0	10m	25	20n	3.0u	100	1 5k			Si	A94h
26	PS1141	1.5k†	.20	25A$	2.5 §	8 0m		175A	7.0	.10	25A							Si	A1gd
27	SE1731	1.5k	.20	50A	3.0 §	10m		150A	5.0	.20	25	2.5u	40m	100	1 5k			Si	A1gg
28♦	1N2886	1.5k	250m	25A				150S	3.0	250m	25A	500n			1.5k	2.1k		Si	M122a
29♦	1N2887	1.5k	250m	25A				150S	3.0	250m	25A	500n			1 5k	2.1k		Si	A83w
30	25L15	1.5k	.25	25	20	8.3m		175	2.0	.25	25	5.0u	.20m	100	1.5k			Si	A1hy
31	25L159	1 5k	25	25	20	8.3m		175	2.0	.25	25	5.0u	.20m	100	1.5k	2.2k	200u	Si	A1hy
32#	M15K	1.5k	25	25A	2.0	1		150A	2.0	.25 †	25	.50u	.03m	100A	1.5k			Si△	A83k
33	1N589	1.5k	.25	50A	10			175A	1.5	.25	50	50u	.30m	150	1.5k			Si	DO1
34	1N4253	1 5k	.25	55A	6.3	8 0m		175A	3.5	.10	55	1.0u	20m	125	1 5k			Si	A1eh
35	1N4254	1 5k	.25	55A	6.3	8 0m		175	3 5	.10	55	1.0u	20m	125	1.5k			Si	A1eh
36	SC15	1.5k	.25	55A	10	8.3m		175	3.5	.10	25A	1.0u	20u	100A	1 5k			Si	A1ds
37	SCE15	1.5k	.25	55A	10			175	3.5 △	.10	25A	1.0u△	02m△	100A	1 5k			Si	A1sd
38	MR991A	1.5k$	250m	75A	15 §			150J	1.7	250m	75A	10u	100u	75A	1 5k			Si	A1dt
39	1N1130	1.5k	30	25A				150A	15	300	25A	50u			1.5k			Si	S24
40	1N1131	1 5k	.30	25A				150A	15	300	25A	50u			1.5k			Si	S24d
41	1N2508	1 5k	.30	25A				150A	1 5	.20	25	20u	20m	150	1.5k			Si	A6
42	30L15	1.5k	30	25	40	8 3m		175	2.0	.30	25	5 0u	20m	100	1 5k			Si	A1hy
43	30L159	1.5k	.30	25	40	8.3m		175	2.0	30	25	5 0u	20m	100	1 5k	2 2k	200u	Si	A1hy
44	515	1 5k	300m	25	20	8.0m		150	3 5	300m	25	2 0u			1 5k			Si△	A79
45	DI515	1.5k	.30	25A$	20	8.0m		100A	3.5	20	25	2.0u			1.5k			Si	A79a
46	CR201	1 5k	.30	60A	9.0			125A	1 8 Ø	.30	60A	10u△	10mØ	100	1.5k			Si△	A83bhØ
47	C1.5E3	1 5k	.35	75	30	8 0m		150S	3.0	.35		1.0u	.10m	100	1.5k			Si	A3s
48	1N1745	1.5k	38	75C$	6.0			150	15	.60	25	25u			1 5k			Si	F12s
49	1N2358	1.5k	400m	25$	15			150	2 0	.65	25	1.0u			1.5k			Si	DO1
50	40L15	1 5k	40	25	40	8 3m		175	2.0	.40	25	5.0u	.20m	100	1 5k			Si	A1hy
51	40L159	1 5k	40	25	40	8.3m		175	2.0	.40	25	5 0u	20m	100	1 5k	2.2k	200u	Si	A1hy
52	1N1746	1 5k	44	75C$	6.0			150	7.5	.70	25	25u			1.5k			Si	F12r
53	1N3187	1.5k	50	25A	4.0	1		150A	3 0	.25	25	.30u	02m	100	1 5k			Si	M82b
54	1N3234	1.5k	.50	25$	12				3.3	.50			500u	150	1.5k			Si	A1cs
55	50L15	1 5k	.50	25	40	8.3m		175	2.0	.50	25	5.0u	.20m	100	1.5k			Si	A1hy
56	50L159	1 5k	.50	25	40	8.3m		175	2 0	.50	25	5 0u	20m	100	1 5k	2.2k	200u	Si	A1hy
57	PS1441	1.5k	50	25A$	10	8 0m	2.8	175A	4 0	.20	25A	1 0u	05m	100A	2.0k			Si	F13a
58	SCBR15A	1 5k	50	30C	5.0			150										Si	M45c*
59	DI515LS	1.5k	50	50A	40	8.0m		125	1.8	.50	25A	5.0u			1.5k			Si	C42f
60▼	500S15	1.5k	500m	55	35	8.3m	1 0	150A	2.0	500m	25	1.0u	20u	100	1.5k			Si	A1tp
61	1N3870	1 5k	.50	60A	5.0 §			200A	2.2	.50	25	.01u	.00		1 5k			Si	A1ds
62	C1 5E2	1 5k	50	75	35	8 0m		150S	2 0	.50		1 0u	.10m	100	1 5k			Si	A3s
63	MPR15	1.5k	500m	100A	25	8 3		175J	1.8	500m	25A	5 0u	150u	175J					
64	1N5330	1.5k	54	40A	15 §			150A	3.3	30	100A		15m	100A	6.0k			Si	A1fv
65	60L15	1.5k	.60	25	40	8.3m		175	2 0	.60	25	5 0u	.20m	100	1.5k			Si	A1hy
66	60L159	1.5k	.60	25	40	8.3m		175	2.0	.60	25	5.0u	.20m	100	1.5k	2.2k	200u	Si	A1hy
67	F15	1.5k	60	25	30	4 0m		140A	2 0	1 0	25	10u			1.5k				DO27
68	TM156	1 5k	.60	75C				175C	2 0	.40	25		.50m	150C	1 5k			Si	A145
69	1N2780	1.5k	75	25A$	15			165S	1.8	.75	25A	4.0u	.10m	150	1.5k			Si	A145
70	1N3245	1 5k	.75	25$	15				2.2	.75			500u	150	1.5k			Si	A1cs
71	75R15B	1 5k	75	25	60			175	4.0	75	25	5.0u	50m	150	1.5k			Si	
72	815C	1.5k	750m	25	50	8 0m		150	2.0	750m	25	5.0u	25u	100	1.5k			Si△	M519
73	DI815C	1 5k	75	40A	50	8.3m		150J	2.0	.75	25	5.0u	25u	100	1.5k			Si	C42l
74	1N2619	1.5k	75	50A				175A	1.1 △	.75			.50m	150A	1.5k			Si△	A31a
75	DK7515	1.5k	750m	50A	60			175A	1.2	750m	25A	10u	100u	100	1.5k			Si	DO27
76	1N570	1 5k	75	150$								50uØ			1.5k			Si	M9a
77	80L15	1.5k	.80	25	60	8.3m		175	2.0	.80	25	5.0u	.20m	100	1.5k			Si	A1hy
78	80L159	1 5k	80	25	60	8.3m		175	2 0	.80	25	5.0u	20m	100	1.5k	2 2k	200u	Si	A1hy
79	US15	1.5k	.80	25	20	8 3m		150A	3 0	.40	25	2.0u	.10m	100	1.5k			Si	A1fv
80▼#	1S2309	1 5k	800m	65A	60			150J	1.8	4.0	25A	10u			1.5k			Si	A56a
81	1N2364	1 5k	1.0	25	15			150	2.0	1.5	25	1.0u			1.5k			Si	DO4
82	1N2365	1.5k	1 0	25	15			150	2 0	1 5	25	1.0u			1.5k			Si	S117
83	100L15	1.5k	1.0	25	60	8 3m		175	2.0	1.0	25	5.0u	20m	100	1.5k			Si	A1hy
84	100L159	1 5k	1 0	25	60	8.3m		175	2 0	1.0	25	5.0u	20m	100	1.5k	2.2k	200u	Si	A1hy
85	100R15B	1 5k	1 0	25	60			175	4 0	1.0	25	5.0u	50m	150	1.5k			Si	
86	NPC1500	1 5k	1.0	25	25			150A	1 1	1.0	25	30u						Si	A3n
87▼#	TD15	1 5k	1 0	60A	60	10m		140J	1.5	2.0	25A	10u			1.5k			Si	A268b
88#	DS0.5A4	1.5k	1.1	25J	60	10	970m	150	1.4	3.3	25J	1.0m	2.0m	150	1.0k			Si	Z3
89#	DS1.2A15	1 5k	1 1	25J	60	10m	970m	150	1 40	3 3	25J	1 0m	2.0m	150	1.0k			Si	
90#	SSiC15100A	1.5k	1.25	45A	75	10m		150J				1.0u			1.5k	2 5k		Si△	A31v
91	TM155	1.5k	1 25	75C				175C	2.0	.80	25		.50m	150C	1.5k			Si	A145
92	PS2348	1.5k	1.3	25A$				175A	3 0	.20	25A	6.0u			1.5k			Si	M22
93#	SKE1/12	1.5k	1.4	45A	50 §	70m	1 2	160	1.3	3.1 Ø	25		100uØ	130	900			Si	C42s
94	150R15B	1.5k	1.5	25	60			175	4 0	1.5	25	5.0u	.50m	150	1.5k			Si	
95#	SSiC16100A	1.5k	1.5	45A	75	10m		150J				1.0u			1 5k	2 5k		Si△	A230
96	S12150	1.5k	1.6	120C	35		.15 ØØ	175J	1.0 Ø	1.0	25A		.10mØ	100C	1 5k	1 8k		Si△	DO13△
97	200R15B	1.5k	2.0	25	60			175	4.0	2.0	25	5.0u	.50m	150	1.5k			Si	
98#	SSiC19100A	1.5k	2 3	45A	75	10m		150J				1 0u			1.5k	2.5k		Si△	A231
99	250R15B	1.5k	2.5	25	250			175	4.0	2 5	25	10u	1.0m	150	1.5k			Si	
100	300R15B	1.5k	3.0	25	250			175	4.0	3.0	25	10u	1.0m	150	1.5k			Si	
101#	S15BR2	1.5k%	3 0	95B	53			130B	.55 Ø	1.5	25		2.0m	125	1.5k			Si	S81
102	1N3775	1.5k	3.3	50B	15 §			175A	1.5	2 0	25	5.0u	.30m	150	1.5k	2.0k		Si△	DO4
103	350R15B	1.5k	3.5	25	250			175	4.0	3.5	25	10u	1 0m	150	1.5k			Si	
104	400R15B	1.5k	4 0	25	250			175	4.0	4.0	25	10u	1.0m	150	1.5k			Si	
105#	SSiC20100A	1.5k	4.0	115C	75	10m		150J				1 0u			1 5k	2.5k		Si△	S112b
106	450R15B	1.5k	4.5	25	250			175	4.0	4.5	25	10u	1.0m	150	1 5k			Si	
107	1N2364A	1.5k	5.0	25	20			150	2.0	8.0	25	1.0u			1.5k			Si	DO4
108	1N2365A	1.5k	5.0	25	20			150	2.0	8.0	25	1 0u			1 5k			Si	S117
109	500R15B	1.5k	5 0	25	250			175	4 0	5 0	25	10u	1 0m	150	1 5k			Si	
110	1N3920	1.5k	5.0	100C	100	8.3m		200C	2.0	5.0	100C		.50m	100C	1 5k			Si	DO4

SYMBOLS AND CODES EXPLAINED IN INTERPRETER

5. RECTIFIERS

IN ORDER OF (1) PIV, (2) MAX AVG FWD CURRENT (3) TEMPERATURE, and (4) TYPE No.

LINE No.	TYPE No. [4]	PIV [1] (V)	MAX AVG FWD DC CURRENT [2] Io (A)	[3] at TEMP (°C)	MAX RATINGS @ 25°C SURGE CUR PEAK 1 Cy (A)	PULSE WIDTH (s)	DISS. (W)	MAX. TEMP (°C)	MAXIMUM FORWARD VOLTAGE DROP Vf (V)	at If (A)	at TEMP (°C)	MAX. REVERSE CURRENT Ir @25°C & Vr (A)	Ir at T & Vr (A)	TEMP T (°C)	AVALANCHE RATINGS TEST VOLT Vr (V)	MAX V BKDN. (V)	MIN SLOPE (A/V)	DESCRIPTION MAT.	DWG. No.
1	550R15B	1 5k	5.5	25	250			175	4.0	5.5	25	10u	1.0m	150	1 5k			Si	
2	600R15B	1 5k	6 0	25	250			175	4.0	6.0	25	10u	1.0m	150	1.5k			Si	
3#	P1506	1 5k	6.0	100C	160	10m		125C	1.2	20	25C		3.0m	125C	1.5k			Si△	S95a
4#	G1506	1 5k	6.0	125C	160	10m		150C	1.2	20	25C		3.0m	125C	1.5k			Si△	DO4
5#	S15AN6	1.5k%	6.0	125B	125		6 5	150J	470mØ	6.0 †			2.0m	125B				Si△	DO4⧄
6	1N2364B	1 5k	10	25C$	25			150	2.0	15	25	1.0u			1 5k			Si	DO4
7	1N2365B	1 5k	10	25C$	25			150	2.0	15	25	1 0u			1 5k			Si	S117
8#	SSiD04100	1 5k	10	110C	125	10m		160J										Si△	S4p△
9#	SSiD04100A	1.5k	10	110C	125	10m		160J							1 5k	2.5k		Si△	S4p△
10#	S15AN12	1 5k%	10	125B	210			150J	500mØ	9.5	25B		2.0m	125B				Si△	DO4⧄
11	SCPD6	1 5k	11	55A	300			150A	3.0	3 0	25A	110u	200u	100A	1.5k			Si	M496
12	SCPN6	1 5k	11	55A	300			150A	3.0	3.0	25A	110u	200u	100A	1.5k			Si	M496
13	SCPP6	1 5k	11	55A	300			150A	3.0	3.0	25A	110u	200u	100A	1 5k			Si	M496
14#	S15AN15	1 5k	15	120B	220			150J	490mØ	15			3.0m		1 5k			Si△	A31d⧄
15#	S15BR8	1.5k%	18	120B	188		18	140B	.60 Ø	18	25		10m	125	1.5k			Si	S122a
16#	RN1520	1 5k	20	150C	250	10m		175C	1.5	70	25C		5.0m	150C	1 5k			Si△	DO5
17#	S15BN31	1 5k	30	120B	347			150J	600mØ	30			4.0m		1 5k			Si△	S321⧄
18#	S15BN40	1 5k	40	120B	485			150J	500mØ	40			4.0m		1.5k			Si△	S321⧄
19#	S15BN55	1 5k	55	125B	935			150J	500mØ	55			6.0m		1 5k			Si△	S323⧄
20#	SR70C30	1 5k	70	119C	1 5k§	8 3m		150J	1.6	220	25C		30m	150J	1 5k			Si△	S333
21#	S15BN71	1.5k	70	120B	1 2k			150J	470mØ	70			6.0m		1.5k			Si△	S323⧄
22#	S15GN71	1 5k	70	120B	1.2k			150J	470mØ	70			6.0m		1 5k			Si△	S322⧄
23	JAN1N3644	1 5k$	100	100	14	8 0m		175S	5 0	25	25	5 0u	.10m	100	1 5k			Si	Z55
24#	AS15⧄	1 5k	100	150	4 0k	20m		150										Si	
25#	S12P1500E	1.5k	110	75C	2 0k	10m		175J	1 35	300	25A	1.0m	15m	175C	1.5k			Si△	F56m
26#	S10N1500E3	1.5k	125	100C			160	150	.97	125	100C	6.0m	20m	100C	1.5k			Si	F56m
27#	S10N1500E4	1.5k	125	100C			160	150	1 03	125	100C	6.0m	20m	100C	1.5k			Si	F56m
28#	S10N1500E5	1.5k	125	100C			160	150	1 08	125	100C	6.0m	20m	100C	1 5k			Si	F56m
29#	S11P1500E	1 5k	150	75C	2.2k	10m		175J	1.35	300	25A	1 0m	15m	175C	1 5k			Si△	F56m
30#	SD1503K	1.5k	150	75C	2 2k	10m		175J	1 35	300	25A	1 0m	15m	175C	1 5k			Si△	
31#	150TD11	1 5k	150	102C	4.5k	10m		150J	1 28	500	150J		15m	150J	1.5k			Si	S338
32#	S15PN125	1 5k%	150	110B	3 3k			150J	1.1	150			30m		1 5k			Si*	S319⧄
33#	S15BR125	1.5k%	150	115B	3.3k			150J	1.1	150			40m		1.5k			Si*	F19
34#	S15KN125	1.5k%	150	125B	3.3k			150J	1.1	150			30m		1 5k			Si*	F80⧄
35#	S15LN125	1.5k%	150	125B	3.3k			150J	1.1	150			30m		1.5k			Si*	M521⧄
36#	S13N1500E	1.5k	190	75C	2.5k	10m		175J	1.35	300	25A	1 0m	15m	175C	1.5k			Si△	F56m
37#	S20P1500JA	1.5k	200	100C	4 0k	10m		175J	1.25	600	25A		30m	175C	1.5k			Si△	
38#	S15BN200	1 5k%	200	120B	1 3k		260	120	42	200	120		40m	120B	1.2k			Si	F19a
39#	SR200P30	1.5k	240	75C	5.0k§	8 3m		150J	1 73	750	25C		30m	150J	1.5k			Si△	S298⧄
40▼#	1S2258	1.5k	250	111C	5 0k§	8.3m		150J	1 75	780	25C		30m	150J	1.5k			Si△	M567
41#	FD250A30	1.5k	250	111C	5 0k§	8 3m		150J	1 75	780	25C		30m	150J	1 5k			Si△	M567
42	A291PE	1 5k	250	130C	4 5k			200J					10mØ	130C	1.5k			Si	S132a
43#	S15EN270	1.5k%	290	125B	1 5k	20m		160B†	.975	340			50m	125B	1.5k			Si*	M307
44#	S15FN270	1.5k%	290	125B	1 5k	20m		160B†	.975	340			50m	125B	1.5k			Si*	M357c
45#	S15GN270	1.5k%	290	125B	1 5k	20m		160B†	.975	340			50m	125B	1.5k			Si*	M357a
46♦#	S15HN270	1.5k%	290	125B	7 2k	10m		160B†	975m	340			50m	125B	1.5k			Si*	M366a
47	S15EN301	1.5k	300	100B	5 1k	10m	410	100B	.65 Ø	300	100B		35m	100B	1.5k			Si	M307
48	S15FN301	1.5k	300	100B	5 1k	10m	410	100B	.65 Ø	300	100B		35m	100B	1.5k			Si	M248
49	S15GN301	1 5k	300	100B	5 1k	10m	410	100B	.65 Ø	300	100B		35m	100B	1.5k			Si	M248a
50#	S15HN301	1.5k	300	100B	5.1k	10m	410	100B	650mØ	300	100B		35m	100B	1.5k			Si	M370
51#	S19EN301	1.5k†	300	100B	1.6k	20m		150B†	670m	340			35m	100B	1.5k			Si*	M307
52#	S19FN301	1.5k†	300	100B	1.6k	20m		150B†	670m	340			35m	100B	1.5k			Si*	M357b
53#	S19GN301	1.5k†	300	100B	1.6k	20m		150B†	670m	340			35m	100B	1.5k			Si*	M357
54#	S19HN301	1.5k†	300	100B	1.6k	20m		150B†	670m	340			35m	100B	1.5k			Si*	M370
55#	S15EN290	1.5k%	310	125B	1 6k	20m		160B†	975	340			50m	125B	1.5k			Si*	M307
56#	S15FN290	1.5k%	310	125B	1 6k	20m		160B†	.975	340			50m	125B	1.5k			Si*	M357c
57#	S15GN290	1 5k%	310	125B	1.6k	20m		160B†	.975	340			50m	125B	1 5k			Si*	M357a
58♦#	S15HN290	1 5k%	310	125B	7.2k	10m		160B†	975m	340			50m	125B	1.5k			Si*	M366a
59#	S30N1600JA3	1.5k	320	100C	4 8k	10m		175J	1.15	600	25A	2 0m	30m	175C	1.5k			Si△	M378
60#	S30N1600JA4	1.5k	320	100C	4 8k	10m		175J	1.25	600	25A	2 0m	30m	175C	1 5k			Si△	M378
61#	S15EN310	1.5k%	330	125B	1.7k	20m		160B†	90	400			50m	125B	1.5k			Si*	M307
62#	S15FN310	1 5k%	330	125B	1.7k	20m		160B†	90	400			50m	125B	1.5k			Si*	M357c
63#	S15GN310	1.5k%	330	125B	1.7k	20m		160B†	.90	400			50m	125B	1 5k			Si*	M357a
64#	S15HN310	1.5k%	330	125B	1 7k	20m		160B†	90	400			50m	125B	1.5k			Si*	M366a
65#	S15GR312	1 5k	340	100B	5.1k			155J	750mØ	340			25m		1.5k			Si△	M522
66#	S15HR312	1.5k	340	100B	5 1k			155J	750mØ	340			25m		1.5k			Si△	M523
67#	S15EN300	1 5k%	340	125B	2.0k	20m		160B	900m	340			50m	125	1.5k			Si*	M307
68▼#	S15HN300	1 5k%	340	125B	7 2k	10m		160B	900m	340			50m	125	1.5k			Si*	M307
69#	300TD11	1.5k	350	90B	6 5k	10m		150J	1.42	1k	25A		20m	150J	1.5k			Si	S12b
70#	S15GR313	1.5k	360	100B	5 4k			155J	700mØ	360			25m		1.5k			Si△	M522
71#	S15HR313	1.5k	360	100B	5.4k			155J	700mØ	360			25m		1.5k			Si△	M523
72#	S15EN350	1.5k%	370	125B	2 0k	20m		160B†	.90	400			50m	125B	1.5k			Si*	M307
73#	S15FN350	1 5k%	370	125B	2.0k	20m		160B†	.90	400			50m	125B	1.5k			Si*	M357c
74#	S15GN350	1 5k%	370	125B	2 0k	20m		160B†	.90	400			50m	125B	1.5k			Si*	M357a
75♦#	S15HN350	1 5k%	370	125B	7 8k	10m		160B†	900m	400			50m	125B	1.5k			Si*	M366a
76#	SR400C30	1 5k	400	98C	10k§	8.3m		150J	1.55	1.2k	25C		30m	150J	1.5k			Si△	S310
77#	300TD11A	1.5k	400	132B	6 0k	10m		200J	1.42	1 0k	25A		30m	200J	1.5k			Si	S12b
78	A295PE	1 5k	500	130C	7 0k	8.3m		200J					15mØ	130C				Si	S132a
79	A296PE	1.5k	500	130C	7 0k	8.3m		200J					15mØ	130C				Si	S247
80#	S15AR504	1.5k	535	100B	9 1k			150J	690mØ	550			20m		1.5k			Si△	M400a
81▼#	1S2252	1.5k	600	93C	10k§	8.3m		150J	1 85	1 9k	25C		30m	150J	1 5k			Si△	M566
82#	FD500E30	1.5k	600	93C	10k§	8.3m		150J	1.85	1.9k	25C		30m	150J	1.5k			Si△	M566
83#	S9K1603K5	1 5k	640	85C	8.0k	10m		175J	1 35	1.2k	25A	2.0m	50m	175C	1.5k			Si△	⧄
84#	S9K1603K45	1.5k	660	85C	9.0k	10m		175J	1.3	1.2k	25A	2.0m	50m	175C	1.5k			Si△	⧄
85#	S9K1603K4	1 5k	680	85C	9.0k	10m		175J	1 25	1.2k	25A	2.0m	50m	175C	1.5k			Si△	⧄
86#	S12BR503	1 5k%	685	100B	10k			165J	675mØ	650			20m		1.2k			Si△	M429
87#	S9K1603K35	1.5k	720	85C	10k	10m		175J	1 2	1.2k	25A	2.0m	50m	175C	1.5k			Si△	⧄
88#	S9K1603K3	1 5k	750	85C	10k	10m		175J	1 15	1.2k	25A	2.0m	50m	175C	1.5k			Si△	⧄
89	A500PE	1 5k	800	95C	8.4k	8.3m		175J	1 36 Ø	1 0k	150C		30m	175J	1 5k			Si	M463
90	A540PE	1 5k	1.0k		10k			200J	1.08		150C		50m	200J	1 7k			Si△	M463
91	HV16A	1.6k	.05	50A	17 §	10m		175A	5.0		25	6.0u						Si	A3t
92	MV16A	1 6k	.05	50A	16 §	10m		175A	5 0	.05	25A	6.0u			1.6k			Si	A3h
93	10R16B	1 6k	10	25	60			175	4.0	10	25	5.0u	.50m	150	1.6k			Si	
94	HV16B	1.6k	.25	50A	17 §	10m		175A	5.0		25	6.0u						Si	A3t
95	MV16B	1 6k	.25	50A	16 §	10m		175A	5.0	25	25A	6.0u			1.6k			Si	A3h
96	1N2359	1.6k	400m	25$	15			150	2 0	650m	25	1.0u			1 6k			Si	DO1
97	1N1110	1 6k	40	100	24	4.0m		150	6 0			2.0m			1 6k			Si	F22c
98	CP115	1 6k	.40	100					2.0		25								M84aj
99	SLDHV1	1 6k	.50	25A	22			175A	3.0		25							Si	M239a
100	HV16C	1 6k	50	50A	17 §	10m		175A	5.0		25	6.0u						Si	A3t
101	MV16C	1 6k	.50	50A	16 §	10m		175A	5 0	.50	25A	6.0u			1.6k			Si	A3h
102	1N2490	1.6k	.50	100A				100	5.0			1.0m			1.6k			Si	M84m*
103	CP110	1 6k	.50	100					2 0		25								M84ah
104	DI6BW4	1 6k	.50	100	50			100				10u			1.6k				M84ab
105	DI6X4	1.6k	.50	100	50			100				10u			1.6k				M84aa
106	S5347	1.6k	.50	100A				100A										Si	M84w
107	DI5AU4	1.6k	57	100	50			100				10u			1.6k				M197a
108	DI5AW4	1.6k	.57	100	50			100				10u			1.6k				M197a
109	DI5AZ4	1 6k	.57	100	50			100				10u			1.6k				M197a
110	DI5T4	1.6k	.57	100	50			100				10u			1.6k				M197a

SYMBOLS AND CODES EXPLAINED IN INTERPRETER

5. RECTIFIERS

IN ORDER OF (1) PIV, (2) MAX AVG FWD CURRENT (3) TEMPERATURE, and (4) TYPE No.

LINE No.	4 TYPE No.	1 PIV (V)	MAX AVG FWD DC CURRENT 2 Io (A)	3 at TEMP (°C)	MAX RATINGS @ 25°C SURGE CUR. PEAK 1 Cy (A)	PULSE WIDTH (s)	DISS. (W)	MAX. TEMP (°C)	MAXIMUM FORWARD VOLTAGE DROP Vf (V)	at If (A)	at TEMP (°C)	MAX. REVERSE CURRENT Ir @25°C & Vr (A)	Ir at T & Vr (A)	TEMP T (°C)	AVALANCHE RATINGS TEST VOLT Vr (V)	MAX V BKDN. (V)	MIN SLOPE (A/V)	DESCRIPTION MAT.	DWG. No.
1	DI5U4	1.6k	.57	100	50			100				10u			1.6k				M197a
2	DI5V4	1.6k	.57	100	50			100				10u			1.6k				M197a
3	DI5W4	1.6k	.57	100	50			100				10u			1.6k				M197a
4	DI5Y3	1.6k	57	100	50			100				10u			1.6k				M197a
5	DI5Z4	1 6k	.57	100	50			100				10u			1 6k				M197a
6	1N2631	1.6k	600m	70$	5 0			100A	3.0 §	600m	100	350uØ			1.6k			Si	M84a
7	1N2633	1.6k	600m	70$	5.0			100A	3.0 §	600m	100	350uØ			1.6k			Si	M84b
8	1N2634	1.6k	600m	70$	5 0			100A	3.0 §	600m	100	350uØ			1.6k			Si	M84c
9	ST14Δ	1.6k	600m	70$				100	3.0	600m	100							Si	M84i
10	1N2389	1.6k	.60	100A$				100A	5.0	.60	25		1.0m	25	1.6k			Si	M84q
11	1N2781	1 6k	75	25A$	15			165S	1.8	.75	25A	4.0u	.10m	150	1.6k			Si	A145
12	75R16B	1.6k	.75	25	60			175	4.0	.75	25	5.0u	.50m	150	1.6k			Si	
13	1N3726	1.6k†	75	50A	12			175A	2.2	.75	50A	5.0u	50m	150A	1.6k			Si	A1bp
14	1N4497	1.6k	.75	85A	35 §			125A	3.0	.75	85A		.20m	125A	1.6k			Si	M239
15	1N1150	1.6k	750m	100$				125	6.0			200u			1.6k			Si	M84k
16	1N1150A	1.6k	75	100A				100A	6.0			2.0m			1.6k			Si	M84k*
17	1N1237	1 6k	.75	100A$				100A	6.0	.75	25		2.0m	25	1.6k			Si	M84b
18	1N1238	1.6k	.75	100A$				100A	6.0	.75	25		2.0m	25	1.6k			Si	M84a
19#	DS0.9-16A	1 6k	1.0		40	10m		150	1.20	3.0		5.0u	1.0m	150					
20#	DSA0.9-16A	1 6k	1.0		35	10m		150	1.20	3.0		5.0u	1.0m	150					
21	1N2366	1.6k	1 0	25	15			150	2.0	1.5	25	1.0u			1.6k			Si	DO4
22	1N2367	1.6k	1.0	25	15			150	2.0	1.5	25	1.0u			1.6k			Si	S117
23	100R16B	1.6k	1 0	25	60			175	4.0	1.0	25	5.0u	.50m	150	1.6k			Si	
24	SLA1600A	1.6k	1.0	25	60	8.3m		150A	1.0	1.0	25	1.0u	.10m	100	1.6k			Si	A69
25	SLA1600B	1 6k	1 0	25	60	8 3m		150A	1.0	1.0	25	1.0u	.15m	100	1.6k			Si	A69
26	SLA1600C	1.6k	1.0	25	60	8.3m		150A	1.0	1.0	25	5.0u	25m	100	1.6k			Si	A69
27#	SJ1403H	1.6k	1.0	30A	32	10m		150J	1.0	750m	25A	10u	50u	120A	1.6k			Si△	A31n
28	1B16	1.6k	1.0	50C$	11			150C	2.0	1.0	25	2.0u	.05m	100	1.6k			Si	M79
29	1C16	1.6k	1.0	50C$	11			150C	2.0	1.0	25	2.0u	.05m	100	1.6k			Si	M116a
30	1D16	1.6k	1.0	75C	35			150C	2.0	1.0	50C	2.0u	.05m	100C	1.6k			Si	M116*
31	SLD1	1.6k	1 1	30A	50			125A	2.5	1 1	25A	10u			1.6k			Si△	M239a
32#	SSiB9890A	1.6k	1 2	45A		10m		150J	1.46	6.3	25J		1.0m	150J				Si△	M571a
33#	DS1.2-16A	1.6k	1.3		60	10m		150	1.20	4.0		5.0u	1.0m	150					
34#	DSA1.2-16A	1.6k	1.3		60	10m		150	1.20	4 0		5.0u	1.0m	150					
35	1N2659	1.6k	1.5	25A	15	8.3m		165A	5 2	1.5	25A	800u			1.6k			Si	M126b
36	150R16B	1.6k	1.5	25	60			175	4.0	1.5	25	5.0u	.50m	150	1.6k			Si	
37#	SSiC9990A	1.6k	1.7	45A		10m		150J	1.48	7.8	25J		1.0m	150J				Si△	M571
38	2ASLD1	1.6k	2.0	25A	200			175A	2 0		25							Si	M239a
39	200R16B	1.6k	2.0	25	60			175	4.0	2.0	25	5.0u	.50m	150	1.6k			Si	
40	SLA32A	1.6k	2.0	25	80	8.3m		150A	.95	2 0	25	1.0u	.10m	100	1.6k			Si	A69
41	SLA32B	1.6k	2.0	25	80	8.3m		150A	.95	2.0	25	1.0u	.15m	100	1.6k			Si	A69
42	SLA32C	1 6k	2.0	25	80	8 3m		150A	1.0	2.0	25	5.0u	.25m	100	1.6k			Si	A69
43#	DS2-16A	1 6k	2 2		120	10m		150	1.20	3.0		5.0u	1.0m	150					
44#	DSA2-16A	1.6k	2.2		120	10m		150	1.20	3.0		5.0u	1.0m	150					
45	250R16B	1.6k	2.5	25	250			175	4.0	2.5	25	10u	1.0m	150	1.6k			Si	
46♦#	SKN2.5/16	1.6k	2.5	45A	120 §	10m		190A	1.0 §	2.5	25J	50u			1.1k			Si	S352b
47	1N2722	1.6k	3.0	25A	15	8.3m		165A	5.2	3.0	25A	800u			1.2k			Si	M126f
48	300R16B	1.6k	3.0	25	250			175	4.0	3.0	25	10u	1.0m	150	1.6k			Si	
49	SODSLD1	1.6k	3.0	30A	290			140A	2.0	3.0	25A	25u			1.6k			Si△	M239t
50	350R16B	1.6k	3.5	25	250			175	4.0	3.5	25	10u	1.0m	150	1.6k			Si	
51	1N2691	1.6k	3.6	25A	15	8.3m		165A	5.2	3.6	25A	800u			1.6k			Si	M126h
52	400R16B	1.6k	4.0	25	250			175	4.0	4.0	25	10u	1.0m	150	1.6k			Si	
53#	BYY92	1.6k	4.0	50B	50			150J	1.3	2.0	25J	5 0u			1.6k			Si△	M41a
54	450R16B	1.6k	4.5	25	250			175	4.0	4.5	25	10u	1.0m	150	1.6k			Si	
55#	SSiD9990A	1.6k	4.7	45A		10m		150J	1.42	15	25J		2.0m	150J				Si△	S344
56	1N2366A	1.6k	5.0	25	20			150	2.0	8.0	25	1.0u			1.6k			Si	DO4
57	1N2367A	1.6k	5.0	25	20			150	2.0	8.0	25	1.0u			1.6k			Si	S117
58	500R16B	1.6k	5.0	25	250			175	4.0	5 0	25	10u	1.0m	150	1.6k			Si	
59#	SKN5/16	1.6k	5.0	45A	160	10m		190A	1.0	10	150								S352b
60#	DS6-16A	1.6k	5.0	132	180	10m		150	1.35	15		5.0u	2.0m	150					
61#	DSA6-16A	1.6k	5.0	132	180	10m		150	1.35	15		5.0u	2.0m	150					
62	550R16B	1.6k	5.5	25	250			175	4.0	5.5	25	10u	1.0m	150	1.6k			Si	
63	600R16B	1.6k	6.0	25	250			175	4.0	6.0	25	10u	1.0m	150	1.6k			Si	
64#	DS9-16A	1.6k	9.0	125	240	10m			1.3	27									
65#	DSA9-16A	1 6k	9.0	125	240	10m			1 3	27									
66	1N2366B	1.6k	10	25C$	25			150	2.0	15	25	1.0u			1.6k			Si	DO4
67	1N2367B	1.6k	10	25C$	25			150	2.0	15	25	1.0u			1.6k			Si	S117
68#	8AN160	1.6k	12	55A	210	10m		140B	.65 Ø	13	25A		10m	120J	1.6k			Si	S4qØ#
69♦#	SKN12/16	1.6k	12.5	125C	200 §	10m		180A	1.0 §	10	25J	150u			1.1k			Si	S353Ø
70#	S13BN15	1.6k%	15	120B	220			150J	490mØ	15			3.0m		1.3k			Si△	
71#	BYX13/1600	1 6k	20	100	600	10m	35	150J	2.0	100	25		1.4m		600			Si	S72cØ
72#	S13AN20	1.6k%	20	120B	250			150J	480mØ	20			3.0m		1.3k			Si△	
73#	S13BN20	1.6k%	20	120B	250			150J	480mØ	20			3.0m		1 3k			Si△	
74#	DS22-16A	1 6k	20	125	380	10m		150	1.4	60		10u	4.0m	150					
75#	DSA22-16A	1 6k	20	125	380	10m		150	1.4	60		10u	4.0m	150					
76♦#	SKN20/16	1 6k	20	125C	270 §	10m		180A	1.0 §	4.5	25J	150u			1.1k			Si	S171sØ
77#	S13AN31	1.6k%	30	120B	347			150J	600mØ	30			4.0m		1.3k			Si△	
78#	3C16	1.6k	30	150	500							310m	810m	150	1.5				
79#	15AN160	1 6k	34	20A	500	10m		140B	700mØ	25	25A		20m	120J	1 6k			Si	S241aØ#
80♥#	4C16	1.6k	40	110C	700	10m		150S	1 5	40	40A	3.0m	12m	150	1.6k			Si*	S181
81#	DS42-16A	1.6k	40	120	1.1k	10m		150	1.15	60		20u	4.0m	150					
82#	DSA42-16A	1 6k	40	120	1.1k	10m		150	1.15	60		20u	4.0m	150					
83#	S13AN40	1.6k%	40	120B	485			150J	500mØ	40			4.0m		1.3k			Si△	
84#	25AN160	1.6k	45	20A	700	10m		140B	700mØ	40	25A		20m	120J	1.6k			Si	S241aØ#
85♦#	SKN45/16	1.6k	45	125C	600 §	10m		180A	1 2 §	60	25J	300u			1 1k			Si	S171tØ
86#	45AR160	1 6k	70	25A	1 1k	10m		140B	.70 Ø	90	25A		25m	120J	1.6k			Si	S8j#
87#	8C16	1.6k	80	150	1 2k							510m	2.5	150	1.5				
88#	70BN160	1.6k	100	40A	1 8k	10m		140B	.70 Ø	130	25A		30m	120J	1.6k			Si	S8kØ#
89#	BYX32/1600	1 6k	100	125B	1 6k	10m		190	1.7	500 †	190J		8.0m	175	1.6k			Si△	S203bØ
90♦#	SKN100/16	1 6k	100	125C	1.5k§	10m		180A	1.0 §	48	25J	500u			1.1k			Si	S171v
91#	10C16	1.6k	100	150	1 5k							510m	2 5	150	1.5				
92#	S12P1600E	1.6k	110	75C	2 0k	10m		175J	1.35	300	25A	1.0m	15m	175C	1.6k			Si△	F56m
93#	S10N1600E3	1.6k	125	100C			160	150	97	125	100C	6.0m	20m	100C	1.6k			Si	F56m
94#	S10N1600E4	1.6k	125	100C			160	150	1.03	125	100C	6 0m	20m	100C	1.6k			Si	F56m
95#	S10N1600E5	1.6k	125	100C			160	150	1.08	125	100C	6.0m	20m	100C	1.6k			Si	F56m
96#	125BN160	1.6k	130	20A	3 0k	10m		140B	700mØ	180	25A		40m	120J	1.6k			Si	S120aØ#
97♦#	SKN130/16	1 6k	130	125C	2.0k§	10m		180A	1.0 §	60	25J	500u			1.1k			Si	S171uØ
98#	S11P1600E	1 6k	150	75C	2 2k	10m		175J	1.35	300	25A	1.0m	15m	175C	1.6k			Si△	F56m
99#	SD1603K	1.6k	150	75C	2 2k	10m		175J	1 35	300	25A	1.0m	15m	175C	1.6k			Si△	
100♦#	15C16	1.6k	150	90C	2 0k	10m		150S	1.5	150	40A	6.0m	30m	150	1.6k			Si	S12j
101#	DS110-16A	1.6k	160	75	3 2k	10m		150	1 4	500		40u	6.0m	150					
102#	DSA110-16A	1.6k	160	75	3 2k	10m		150	1.4	500		40u	6.0m	150					
103	1N3276	1 6k†	160	125C	2 0k			190J	1 25	160	125C		12m	125C	1.6k			Si	DO9
104♦#	SKN170/16	1 6k	170	125C	3.0k§	10m		180A	1.0 §	80	25J	700u			1.1k			Si	S171w
105	JAN1N3176,R	1 6k	175	150C	3.0k	8.3m		175C	1 4 †	750	25	50m	20m	175C	1.4k			Si	DO9Ø
106#	200BN160	1 6k	180	20A	7 5k	10m		140B	700mØ	240	25A		40m	120J	1.6k			Si	S120aØ#
107#	S13N1600E	1 6k	190	75C	2.5k	10m		175J	1.35	300	25A	1.0m	15m	175C	1.6k			Si△	F56m
108#	S20P1600JA	1 6k	200	100C	4.0k	10m		175J	1 25	600	25A		30m	175C	1.6k			Si△	
109#	20C16	1.6k	220	100C	3.5k	10m		150J	1 2	220	40A		5.0m	25	1.6k			Si*	S184
110	1N3177	1.6k	240	100C$	3.0k			150J	1.4				15mØ	100J	1.6k			Si	DO9

SYMBOLS AND CODES EXPLAINED IN INTERPRETER

5. RECTIFIERS

IN ORDER OF (1) PIV, (2) MAX AVG FWD CURRENT (3) TEMPERATURE, and (4) TYPE No.

LINE No.	TYPE No. [4]	PIV [1] (V)	MAX AVG FWD DC CURRENT: Io [2] (A)	at TEMP [3] (°C)	MAX RATINGS @ 25°C SURGE CUR.: PEAK 1 Cy (A)	PULSE WIDTH (s)	DISS. (W)	MAX. TEMP (°C)	MAXIMUM FORWARD VOLTAGE DROP: Vf (V)	at If (A)	at TEMP (°C)	MAX. REVERSE CURRENT: Ir @25°C & Vr (A)	Ir at T & Vr (A)	TEMP T (°C)	AVALANCHE RATINGS: TEST VOLT Vr (V)	MAX V BKDN. (V)	MIN SLOPE (A/V)	DESCRIPTION: MAT.	DWG. No.
1♦#	SKN240/16	1.6k	240	125C	5.0k§	10m		180A	1.0 §	125	25J	1.0m			1.1k			Si	S171w∅
2♦#	25C16	1.6k	250	90C	4.0k	10m		150S	1.5	250	90C	8.0m	45m	150	400			Si	S184
3	DRS254	1.6k	250	100C$	4.5k	8.3m		175J	.55	250	110	2.0m	10m	175J	1.6k			Si	S210a∅
4▼#	1S2259	1.6k	250	111C	5.0k§	8.3m		150J	1.75	780	25C		30m	150J	1.6k			Si△	M567
5#	FD250A32	1.6k	250	111C	5.0k§	8.3m		150J	1.75	780	25C		30m	150J	1.6k			Si△	M567
6#	BYX33/1600	1.6k	250	125B	4 0k	10m		190J	1.8	1.2k	190J		20m	175J	1.6k			Si△	M294∅
7	A291PM	1.6k	250	130C	4.5k			200J					10m∅	130C	1.6k			Si	S132a
8#	S16EN270	1.6k%	290	125B	1.5k	20m		160Bt	.975	340			50m	125B	1.6k			Si*	M307
9#	S16FN270	1.6k%	290	125B	1.5k	20m		160Bt	.975	340			50m	125B	1.6k			Si*	M357c
10#	S16GN270	1.6k%	290	125B	1.5k	20m		160Bt	.975	340			50m	125B	1.6k			Si*	M357a
11#	S16HN270	1.6k%	290	125B	1.5k	20m		160Bt	.975	340			50m	125B	1.6k			Si*	M366a
12	S16EN301	1.6k	300	100B	5.1k	10m	410	100B	.65 ∅	300	100B		35m	100B	1.6k			Si	M307
13	S16FN301	1.6k	300	100B	5.1k	10m	410	100B	.65 ∅	300	100B		35m	100B	1.6k			Si	M248
14	S16GN301	1.6k	300	100B	5.1k	10m	410	100B	.65 ∅	300	100B		35m	100B	1.6k			Si	M248a
15	S16HN301	1 6k	300	100B	5.1k	10m	410	100B	.65 ∅	300	100B		35m	100B	1.6k			Si	M370
16#	S20EN301	1.6k†	300	100B	1 6k	20m		150Bt	.67	340			35m	100B	1.6k			Si*	M307
17#	S20FN301	1.6k†	300	100B	1.6k	20m		150Bt	.67	340			35m	100B	1 6k			Si*	M357b
18#	S20GN301	1.6k†	300	100B	1 6k	20m		150Bt	67	340			35m	100B	1.6k			Si*	M357
19#	S20HN301	1 6k†	300	100B	1.6k	20m		150Bt	.67	340			35m	100B	1 6k			Si*	M370
20#	TA3016R	1.6k	300	100C	6.0k	10m			1.4	1.0k			15m	150C	1.6k				S316
21	301U160	1.6k†	300	120C	6.2k§	8 3m		200J	1.62	300 †	120C		20m∅	120C	1.6k			Si△	D09
22	301UR160	1.6k†	300	135C	6.2k§	8.3m		200J	1.62	300 †	135C		20m∅	135C	1.6k			Si△	D09
23#	30C16	1.6k	300	150	4 5k							810m	4.5	150	1.5				
24#	S16EN290	1 6k%	310	125B	1 6k	20m		160Bt	.975	340			50m	125B	1.6k			Si*	M307
25#	S16FN290	1.6k%	310	125B	1 6k	20m		160Bt	.975	340			50m	125B	1.6k			Si*	M357c
26#	S16GN290	1 6k%	310	125B	1 6k	20m		160Bt	.975	340			50m	125B	1.6k			Si*	M357a
27#	S16HN290	1.6k%	310	125B	1 6k	20m		160Bt	.975	340			50m	125B	1.6k			Si*	M366a
28#	S30N1700JA4	1.6k	320	100C	4.8k	10m		175J	1.25	600	25A	2.0m	30m	175C	1.6k			Si△	M378
29♦#	SKN320/16	1.6k	320	125C	8.0k§	10m		180A	1.0	200	25J	1.5m			1 1k			Si	S17x
30#	S16EN310	1.6k%	330	125B	1 7k	20m		160Bt	.975	340			50m	125B	1.6k			Si*	M307
31#	S16FN310	1.6k%	330	125B	1.7k	20m		160Bt	.975	340			50m	125B	1.6k			Si*	M357c
32#	S16GN310	1.6k%	330	125B	1 7k	20m		160Bt	.975	340			50m	125B	1.6k			Si*	M357a
33#	S16HN310	1.6k%	330	125B	1.7k	20m		160Bt	.975	340			50m	125B	1 6k			Si*	M366a
34#	S16GR312	1.6k	340	100B	5.1k			155J	750m∅	340			25m		1 6k			Si△	M522
35#	S16HR312	1.6k	340	100B	5 1k			155J	750m∅	340			25m		1 6k			Si△	M523
36	CH1514	1 6k	340	120C	4.5k	8 3m		200S	1.6	340	140C		10m	120C	1 6k	2 0k		Si	D09∅
37#	S16GR313	1 6k	360	100B	5 4k			155J	700m∅	360			25m		1.6k			Si△	M522
38#	S16HR313	1 6k	360	100B	5 4k			155J	700m∅	360			25m		1.6k			Si△	M523
39#	S16EN350	1 6k%	370	125B	2.0k	20m		160Bt	.975	340			50m	125B	1.6k			Si*	M307
40#	S16FN350	1.6k%	370	125B	2.0k	20m		160Bt	975	340			50m	125B	1.6k			Si*	M357c
41#	S16GN350	1 6k%	370	125B	2 0k	20m		160Bt	.975	340			50m	125B	1.6k			Si*	M357a
42#	S16HN350	1.6k%	370	125B	2.0k	20m		160Bt	975	340			50m	125B	1.6k			Si*	M366a
43▼#	BYX51-1600	1.6k	400	115C	6.0k§	10m		190J	1.5	1.2k	25J		30m	175J	1.6k			Si△	M294b∅
44#	40C16	1.6k	400	150	5.0k							1 5	7.5	150	1.5				
45♦	471PD160	1.6k†	470	105C	6.2k§	8.3m		200J	2.0	470 †	105C		20m∅	105C	1.6k			Si△	J200a
46	783ZM	1.6k	485	130C	5.0k	8.3m		190J	1.9	400	130C		10m∅	130C	1.6k			Si	
47	501V160	1 6k	500	105C	8.0k§	8.3m		200J	1.45	500 †	105C		16m∅	105C	1.6k			Si△	S120g∅
48	501VR160	1 6k	500	120C	8.0k§	8.3m		200J	1.45	500 †	120C		16m∅	120C	1.6k			Si△	S120g∅
49	CH1624	1.6k	500	120C	8.5k	8.3m		180S	1 2	500	140C		15m	120C	1.6k	2.0k		Si	F82∅
50#	150MA160	1 6k	500	129B	9 0k	10m		175A	1.5 †	1.5	175J		50m		1.6k			Si	S8p
51#	1S1338R	1 6k	500	130B	9.0k			175J	1.4	1.5k	25J		25m	175J	1.6k			Si△	S12h
52	A295PM	1.6k	500	130C	7 0k	8.3m		200J					15m∅	130C				Si	S132a
53	A296PM	1.6k	500	130C	7 0k	8.3m		200J					15m∅	130C				Si	S247
54#	S16AR504	1 6k	535	100B	9.1k			150J	690m∅	550			20m		1.6k			Si△	M400a
55▼#	SiD300P16K44	1 6k	600	95B	7 1k	10m		175J	1.33	1 0k	150J		22m	175J	1.6k			Si	S368
56▼#	SiB300P16K35	1.6k	600	105B	8.4k	10m		185J	1 15	1.0k	150J		18m	185J	1.6k			Si	S367
57▼#	Si250P16K38	1.6k	630	105B	6 0k	10m		185J	1.22	1.0k	150J		20m	185J	1.6k			Si	S364
58#	S9K1703K5	1.6k	640	85C	8 0k	10m		175J	1 35	1.2k	25A	2.0m	50m	175C	1.6k			Si△	∅
59#	S9K1703K45	1 6k	660	85C	9 0k	10m		175J	1.3	1.2k	25A	2.0m	50m	175C	1.6k			Si△	∅
60#	S9K1703K4	1 6k	680	85C	9 0k	10m		175J	1 25	1.2k	25A	2.0m	50m	175C	1.6k			Si△	∅
61#	S13BR503	1 6k%	685	100B	10k			165J	675m∅	650			20m		1.3k			Si△	M429
62#	D400-1600	1 6k	700	65C	8 0k§	10m		150J	1.15	400	25J	10m		25J	1.6k			Si	M486b%
63▼#	Si300P16K44	1.6k	700	95B	7.1k	10m		175J	1.33	1.0k	150J		19m	175J	1.6k			Si	S372
64▼#	SiG300P16K35	1.6k	700	105C	8.4k	10m		185J	1.15	1 0k	150J		25m	185J	1 8k			Si	S372
65#	S9K1703K35	1 6k	720	85C	10k	10m		175J	1 2	1 2k	25A	2.0m	50m	175C	1.6k			Si△	∅
66#	S9K1703K3	1.6k	750	85C	10k	10m		175J	1.15	1 2k	25A	2.0m	50m	175C	1.6k			Si△	∅
67	A500PM	1 6k	800	95C	8 4k	8 3m		175J	1.36 ∅	1.0k	150C		30m	175J	1.6k			Si	M463
68▼#	1S2262	1.6k	800	101C	14k§	8 3m		150J	1.65	2.5k	25C		30m	150J	1.6k			Si△	M404
69#	FD1000A32	1.6k	800	101C	14k§	8.3m		150J	1.65	2.5k	25C		30m	150J	1.6k			Si△	M509
70#	V2059X	1 6k	800	103C	12k	20m		150J	1 6	2.5k	25	10m	25m	150J	1.6k				M484
71♦	801PD160	1.6k†	800	120C	8.0k§	8.3m		200J	1.8	800 †	120C		16m∅	120C	1 6k			Si△	J200b
72	A540PM	1 6k	1.0k		10k			200J	1 08		150C		50m	200J	1.8k			Si△	M463
73▼#	YSD901P16K29	1 6k	1.7k	85C	23k	10m		150J	970m	1.8k	150J		30m	150J	1.6k			Si	S370
74♦	1N2888	1 7k	250m	25A				150S	5 0	250m	25A	500n			1.7k	3.5k		Si	M122b
75♦	1N2889	1.7k	250m	25A				150S	5.0	250m	25A	500n			1.7k	3.5k		Si	A83ak
76	JAN1N1130	1.7k	.30	100C	1.5 §	8 3m		175C	4.0	30	25C	15u	.40m	150C	1.5k			Si	S24a
77	JAN1N1131	1.7k	.30	100C	1.5 §	8.3m		175C	4.0	30	25C	15u	.40m	150C	1.5k			Si	S24b
78#	0953	1.7k*	.50	50A$	30			150J	3.6 △	.50	25A	1 0u			1.5k			Si*	A1ng △
79#	S14BN15	1 7k%	15	120B	220			150J	490m∅	15			3.0m		1.4k			Si△	
80#	SSiE20100	1.7k	20	85C	250	10m		160J										Si△	S4p△
81#	SSiE20100A	1.7k	20	85C	250	10m		160J								3 0k		Si△	S4p△
82#	S14AN20	1 7k%	20	120B	250			150J	480m∅	20			3 0m		1.4k			Si△	
83#	S14BN20	1 7k%	20	120B	250			150J	480m∅	20			3.0m		1.4k			Si△	
84#	S14AN31	1.7k%	30	120B	347			150J	600m∅	30			4.0m		1.4k			Si△	
85#	S14AN40	1.7k%	40	120B	485			150J	500m∅	40			4.0m		1 4k			Si△	
86#	SSiL20100	1.7k	250	94C	4.8k	10m		160J	1 46	785	25J		15m	160J				Si△*	S345
87	A291PS	1 7k	250	130C	4.5k			200J					10m∅	130C	1.7k			Si	S132a
88#	S30N1800JA4	1.7k	320	100C	4.8k	10m		175J	1.25	600	25A	2.0m	30m	175C	1.7k			Si△	M378
89#	S17GR312	1.7k	340	100B	5 1k			155J	750m∅	340			25m		1.7k			Si△	M522
90#	S17HR312	1.7k	340	100B	5.1k			155J	750m∅	340			25m		1.7k			Si△	M523
91#	DSA250-17L	1.7k	350		4.5k	10m	20	150	1 50										
92#	S17GR313	1 7k	360	100B	5.4k			155J	700m∅	360			25m		1.7k			Si△	M522
93#	S17HR313	1.7k	360	100B	5.4k			155J	700m∅	360			25m		1.7k			Si△	M523
94#	S17EN350	1 7k	370	125B	2 0k	20		160B	900m	400			50M	125B	1.7k			Si	M307
95#	S17FN350	1.7k	370	125B	2.0k	20		160B	900m	400			50M	125B	1.7k			Si	M357c
96#	SSiN20100	1 7k	400	90C	8 0k	10m		160J				200u			1.7k			Si△	S12a#
97#	SSiN20100A	1.7k	400	90C	8.0k	10m		160J				200u			1 7k	3 0k		Si△	S12a#
98#	DSA400-17L	1.7k	475		8 5k	10m		140	7 20										
99	A295PS	1 7k	500	130C	7.0k	8 3m		200J					15m∅	130C				Si	S132a
100	A296PS	1 7k	500	130C	7.0k	8 3m		200J					15m∅	130C				Si	S247
101#	S17AR504	1.7k	535	100B	9.1k			150J	690m∅	550			20m		1 7k			Si△	M400a
102#	S9K1803K5	1.7k	640	85C	8 0k	10m		175J	1.35	1.2k	25A	2.0m	50m	175C	1.7k			Si△	∅
103#	S9K1803K45	1.7k	660	85C	9 0k	10m		175J	1 3	1 2k	25A	2.0m	50m	175C	1 7k			Si△	∅
104#	S9K1803K4	1 7k	680	85C	9.0k	10m		175J	1.25	1 2k	25A	2.0m	50m	175C	1.7k			Si△	∅
105#	S14BR503	1 7k%	685	100B	10k			165J	675m∅	650			20m		1.4k			Si△	M429
106#	S9K1803K35	1 7k	720	85C	10k	10m		175J	1.2	1.2k	25A	2.0m	50m	175C	1.7k			Si△	∅
107#	S9K1803K3	1 7k	750	85C	10k	10m		175J	1.15	1.2k	25A	2 0m	50m	175C	1.7k			Si△	∅
108	A500PS	1.7k	800	95C	8.4k	8.3m		175J	1.36 ∅	1.0k	150C		30m	175J	1 7k			Si	M463
109	A540PS	1 7k	1 0k		10k			200J	1.08		150C		50m	200J	1 9k			Si△	M463
110#	SSiP01100	1 7k	1 0k	80C	18k	10m		150J										Si△*	M510#

SYMBOLS AND CODES EXPLAINED IN INTERPRETER

5. RECTIFIERS

IN ORDER OF (1) PIV, (2) MAX AVG FWD CURRENT (3) TEMPERATURE, and (4) TYPE No.

LINE No	4 TYPE No.	1 PIV (V)	MAX AVG FWD DC CURRENT 2 Io (A)	3 at TEMP (°C)	MAX RATINGS @ 25°C SURGE CUR. PEAK 1 Cy (A)	PULSE WIDTH (s)	DISS. (W)	MAX. TEMP (°C)	MAXIMUM FORWARD VOLTAGE DROP Vf (V)	at If (A)	at TEMP (°C)	MAX. REVERSE CURRENT Ir @25°C & Vr (A)	Ir at T & Vr (A)	TEMP T (°C)	TEST VOLT Vr (V)	AVALANCHE RATINGS MAX V BKDN. (V)	MIN SLOPE (A/V)	DESCRIPTION MAT.	DWG. No.
1▼	BY184	1 8k	2 0m	25	1 0	10m		100	5.0	100m	75		10u	75	1.5k			Si	
2	1N1135	1 8k	065	75	3 5	5 0m		170	18	75m	50		.20m	50	1 8k			Si	F57d
3	1N1136	1 8k	085	75	3 5	5 0m		170	9.0	95m	50		.20m	50	1 8k			Si	S57e
4	10R18B	1.8k	100m	25	60			175	4 0	100m	25	5 0u	500u	150	1 8k				
5	1N1411	1 8k	125	25A				150	7.5	1.2	25	10u	.10m	150A	1 8k			Si	A149
6	HVC180	1.8k	25	55A	7 5			150	4.0	25	25	10u			1.8k			Si	M291
7	JAN1N1731A	1 8k	350m	25A	6 0	8 3m		150A	3 6 †	1 1	25	100u	12u	150A	1.8k			Si	A1gq
8	1N1747	1 8k	36	75C$	6 0			150	18	60	25	25u			1.8k			Si	F12s
9	1N2360	1 8k	400m	25$	15			150	2 0	650m	25	1 0u			1.8k			Si	DO1
10	CP119	1 8k	40	75					2 0		25								M84a
11	1N1748	1 8k	42	75C$	6 0			150	9 0	70	25	25u			1.8k			Si	F12r
12	1N3235	1 8k	500m	25$	12				3.3	500m			500m	150	1 8k			Si	A1cs
13	US18	1 8k	70	25	20	8 3m		150A	3 0	.40	25	2 0u	10m	100	1 8k			Si	A1fv
14	75R18B	1 8k	750m	25	60			175	4 0	750m	25	5.0u	500u	150	1.8k				
15	1N3727	1.8k†	75	50A	12			175A	2 2	75	50A	5.0u	50m	150A	1.8k			Si	A1bp
16	A1425MH3AB1	1.8k	850m	50A				150A	2.7	100m	25	5.0u	100u	150A	1.8k			Si	A1ga
17	A1423MH3AB1	1 8k	880m	50A				150A	2 7	100m	25	5 0u	100u	150A	1.8k			Si	M212
18#	DS0 9-18A	1 8k	1 0		40	10m		150	1.20	3.0		5 0u	1 0m	150					
19#	DSA0.9-18A	1 8k	1 0		35	10m		150	1 20	3.0		5 0u	1 0m	150					
20	1N2368	1 8k	1 0	25	15			150	2.0	1.5	25	1 0u			1 8k			Si	DO4
21	1N2369	1 8k	1 0	25	15			150	2.0	1.5	25	1.0u			1 8k			Si	S117
22	100R18B	1 8k	1 0	25	60			175	4 0	1.0	25	5.0u	500u	150	1 8k				
23	SLA1800A	1 8k	1 0	25	60	8 3m		150A	1.0	1 0	25	1.0u	10m	100	1.8k			Si	A69
24	SLA1800B	1 8k	1.0	25	60	8 3m		150A	1 0	1.0	25	1.0u	15m	100	1 8k			Si	A69
25	SLA1800C	1.8k	1.0	25	60	8.3m		150A	1.0	1 0	25	5.0u	25m	100	1.8k			Si	A69
26	1B18	1 8k	1.0	50C$	11			150C	2 0	1.0	25	2.0u	.05m	100	1.8k			Si	M79
27	1C18	1 8k	1 0	50C$	11			150C	2.0	1.0	25	2.0u	05m	100	1.8k			Si	M116a
28	A1423MC3AB1	1.8k	1 0	50A				150A	2 7	100m	25A	5.0u	100u	150A	1 8k			Si	M205k
29	1D18	1 8k	1 0	75C	35			150C	2 0	1.0	50C	2.0u	.05m	100C	1 8k			Si	M116*
30#	DS1.2-18A	1 8k	1 3		60	10m		150	1.20	4.0		5.0u	1.0m	150					
31#	DSA1 2-18A	1 8k	1.3		60	10m		150	1 20	4.0		5.0u	1.0m	150					
32	150R18B	1 8k	1.5	25	60			175	4 0	1.5	25	5.0u	500u	150	1 8k				
33	1.5E18	1 8k	1 5	50A	75 §			175A	1 1	1.5	25A	2.0u	.05m	100	1 8k			Si	DO27
34	200R18B	1 8k	2 0	25	60			175	4.0	2.0	25	5.0u	500u	150	1 8k				
35	SLA33A	1 8k	2 0	25	80	8 3m		150A	.95	2.0	25	1.0u	10m	100	1.8k			Si	A69
36	SLA33B	1 8k	2 0	25	80	8.3m		150A	95	2.0	25	1.0u	.15m	100	1 8k			Si	A69
37	SLA33C	1 8k	2.0	25	80	8 3m		150A	1 0	2.0	25	5.0u	25m	100	1.8k			Si	A69
38#	DS2-18A	1 8k	2.2		120	10m		150	1.20	3.0		5.0u	1 0m	150					
39#	DSA2-18A	1 8k	2.2		120	10m		150	1 2	3.0		5.0u	1 0m	150					
40	250R18B	1 8k	2 5	25	250			175	4.0	2.5	25	10u	1.0m	150	1 8k				
41	300R18B	1 8k	3 0	25	250			175	4.0	3.0	25	10u	1.0m	150	1 8k				
42	1N4537	1 8k*	3 0	100C	15 §	8 3m		175C	1 85	3.0	100C		2.0m	175C	1.5k			Si	DO4
43	350R18B	1 8k	3.5	25	250			175	4 0	3.5	25	10u	1.0m	150	1 8k				
44	400R18B	1 8k	4.0	25	250			175	4 0	4.0	25	10u	1.0m	150	1 8k				
45	450R18B	1 8k	4.5	25	250			175	4 0	4.5	25	10u	1.0m	150	1.8k				
46	1N2368A	1 8k	5 0	25	20			150	2.0	8 0	25	1.0u			1.8k			Si	DO4
47	1N2369A	1 8k	5 0	25	20			150	2.0	8 0	25	1.0u			1.8k			Si	S117
48	500R18B	1.8k	5.0	25	250			175	4.0	5.0	25	10u	1 0m	150	1.8k				
49#	DS6-18A	1 8k	5.0	132	180	10m		150	1 35	15		5.0u	2 0m	150					
50#	DSA6-18A	1.8k	5.0	132	180	10m		150	1 35	15		5.0u	2 0m	150					
51	550R18B	1 8k	5 5	25	250			175	4 0	5.5	25	10u	1 0m	150	1.8k				
52	600R18B	1.8k	6 0	25	250			175	4.0	6 0	25	10u	1.0m	150	1.8k				
53#	DS9-18A	1.8k	9.0	125	240	10m			1 3	27									
54#	DSA9-18A	1.8k	9 0	125	240	10m			1.3	27									
55	1N2368B	1 8k	10	25B	25			150	2.0	15	25	1.0u			1.8k			Si	DO4
56	1N2369B	1 8k	10	25C$	25			150	2.0	15	25	1 0u			1.8k			Si	S117
57#	S15BN15	1.8k%	15	120B	220			150J	490mØ	15			3 0m		1.5k			Si△	
58#	S15AN20	1.8k%	20	120B	250			150J	480mØ	20			3.0m		1.5k			Si△	
59#	S15BN20	1.8k%	20	120B	250			150J	480mØ	20			3.0m		1.5k			Si△	
60#	DS22-18A	1 8k	20	125	380	10m		150	1 4	60		10u	4.0m	150					
61#	DSA22-18A	1 8k	20	125	380	10m		150	1 4	60		10u	4.0m	150					
62#	S15AN31	1 8k%	30	120B	347			150J	600mØ	30			4.0m		1.5k			Si△	
63#	DS42-18A	1 8k	40	120	1 1k	10m		150	1 15	60		20u	4.0m	150					
64#	DSA42-18A	1 8k	40	120	1 1k	10m		150	1 15	60		20u	4.0m	150					
65#	S15AN40	1 8k%	40	120B	485			150J	500mØ	40			4.0m		1.5k			Si△	
66#	SR70C36	1.8k	70	119C	1 5k§	8.3m		150J	1.6	220	25C		30m	150J	1.8k			Si△	S333
67#	DS110-18A	1 8k	160	75	3 2k	10m		150	1.4	500		40u	6.0m	150					
68#	DSA110-18A	1 8k	160	75	3 2k	10m		150	1 4	500		40u	6.0m	150					
69#	20C18	1.8k	220	100C	3 5k	10m			1.4										
70#	SR200P36	1.8k	240	75C	5 0k§	8.3m		150J	1.73	750	25C		30m	150J	1.8k			Si△	S298⊠
71#	SSiL99100	1.8k	250	100C	6 1k	10m		150J	1.3	785	25J		40m	150J				Si△*	M572a
72▼#	1S2260	1 8k	250	111C	5 0k§	8.3m		150J	1.75	780	25C		30m	150J	1 8k			Si△	M567
73#	FD250A36	1 8k	250	111C	5 0k§	8 3m		150J	1.75	780	25C		30m	150J	1.8k			Si△	M567
74	A291PN	1.8k	250	130C	4 5k			200J					10mØ	130C	1 8k			Si	S132a
75#	TA3018R	1.8k	300	100C	6 0k	10m			1.4	1.0k			15m	150C	1.8k				S316
76	301U180	1.8k†	300	120C	6 2k§	8 3m		200J	1.62	300 †	120C		20m⊠	120C	1.8k			Si△	DO9
77	301UR180	1 8k†	300	135C	6 2k§	8 3m		200J	1.62	300 †	135C		20m⊠	135C	1 8k			Si△	DO9
78#	SSiL98100	1.8k	320	96C	6 7k	10m		150J	1.35	1 0k	25J		40m	150J				Si△*	M572
79#	S30N1900JA4	1 8k	320	100C	4 8k	10m		175J	1.25	600	25A	2 0m	30m	175C	1.8k			Si△	M378
80	CH1515	1 8k	320	120C	3 5k	8 3m		200S	1.7	320	140C		10m	120C	1.8k	2.2k		Si	DO9⊠
81#	S18GR312	1.8k	340	100B	5.1k			155J	750mØ	340			25m		1.8k			Si△	M522
82#	S18HR312	1 8k	340	100B	5.1k			155J	750mØ	340			25m		1.8k			Si△	M523
83#	300WD11	1 8k	350	90B	6 5k	10m		150J	1.42	1k	25A		20m	150J	1 8k			Si	S12b
84#	S18GR313	1.8k	360	100B	5 4k			155J	700mØ	360			25m		1.8k			Si△	M522
85#	S18HR313	1.8k	360	100B	5 4k			155J	700mØ	360			25m		1.8k			Si△	M523
86#	S18EN350	1 8k	370	125B	2 0k	20		160B	900m	400			50M	125B	1.8k			Si	M307
87#	S18FN350	1 8k	370	125B	2.0k	20		160B	900m	400			50M	125B	1 8k			Si	M357c
88#	300WD11A	1 8k	400	132B	6.0k	10m		200J	1.42	1.0k	25A		30m	200J	1 8k			Si	S12b
89#	SSiN98100	1 8k	450	90C	8.5k	10m		150J	1.55	1.4k	25J		50m	150J				Si△*	M572a
90♦	471PD180	1.8k†	470	105C	6 2k§	8 3m		200J	2.0	470 †	105C		20mØ	105C	1 8k			Si△	J200a
91	783ZS	1.8k	485	130C	5.0k	8 3m		190J	1 9	400	130C		10m⊠	130C	1.8k			Si	
92	501V180	1.8k	500	105C	8 0k§	8.3m		200J	1.45	500 †	105C		16mØ	105C	1.8k			Si△	S120g⊠
93	501VR180	1.8k	500	120C	8.0k§	8 3m		200J	1.45	500 †	120C		16mØ	120C	1 8k			Si△	S120g⊠
94#	150MA180	1 8k	500	129B	9 0k	10m		175A	1.5 †	1.5	175J		50m		1 8k			Si	S8p
95#	1S1339R	1 8k	500	130B	9.0k			175J	1.4	1.5k	25J		25m	175J	1 8k			Si△	S12h
96	A295PN	1 8k	500	130C	7 0k	8.3m		200J					15mØ	130C				Si	S132a
97	A296PN	1 8k	500	130C	7.0k	8.3m		200J					15mØ	130C				Si	S247
98#	S18AR504	1 8k	535	100B	9.1k			150J	690mØ	550			20m		1.8k			Si△	M400a
99▼#	SiD300P18K44	1 8k	600	95B	7 1k	10m		175J	1.33	1.0k	150J		21m	175J	1.8k			Si	S368
100▼#	SiB300P18K35	1.8k	600	105B	8.4k	10m		185J	1.15	1.0k	150J		18m	185J	1.8k			Si	S367
101▼#	Si250P18K38	1.8k	630	105B	6.0k	10m		185J	1.22	1.0k	150J		19m	185J	1 8k			Si	S364
102#	S9K1903K5	1 8k	640	85C	8 0k	10m		175J	1.35	1.2k	25A	2.0m	50m	175C	1.8k			Si△	⊠
103#	S9K1903K45	1 8k	660	85C	9 0k	10m		175J	1 3	1.2k	25A	2.0m	50m	175C	1.8k			Si△	⊠
104#	S9K1903K4	1 8k	680	85C	9.0k	10m		175J	1 25	1 2k	25A	2.0m	50m	175C	1.8k			Si△	⊠
105#	S15BR503	1.8k%	685	100B	10k			165J	675mØ	650			20m		1.5k			Si△	M429
106#	D400-1800	1 8k	700	65C	8.0k§	10m		150J	1 15	400	25J	10m		25J	1.8k			Si	M486b%
107▼#	Si300P18K44	1 8k	700	95B	7.1k	10m		175J	1.33	1.0k	150J		18m	175J	1.8k			Si	S366
108▼#	SiG300P18K35	1 8k	700	105C	8 4k	10m		185J	1 15	1.0k	150J		24m	185J	2.0k			Si	S372
109#	S9K1903K35	1 8k	720	85C	10k	10m		175J	1 2	1.2k	25A	2.0m	50m	175C	1.8k			Si△	⊠
110	A500PN	1.8k	800	95C	8.4k	8.3m		175J	1 36 Ø	1 0k	150C		30m	175J	1.8k			Si	M463

SYMBOLS AND CODES EXPLAINED IN INTERPRETER

5. RECTIFIERS

IN ORDER OF (1) PIV, (2) MAX AVG FWD CURRENT (3) TEMPERATURE, and (4) TYPE No.

LINE No.	TYPE No.	PIV (V)	MAX AVG FWD DC CURRENT Io (A)	at TEMP (°C)	MAX RATINGS @ 25°C SURGE CUR. PEAK 1 Cy (A)	PULSE WIDTH (s)	DISS. (W)	MAX TEMP (°C)	MAXIMUM FORWARD VOLTAGE DROP Vf (V)	at If (A)	at TEMP (°C)	MAX. REVERSE CURRENT Ir @25°C & Vr (A)	Ir at T & Vr (A)	TEMP T (°C)	TEST VOLT Vr (V)	AVALANCHE RATINGS MAX V BKDN. (V)	MIN SLOPE (A/V)	DESCRIPTION MAT.	DWG. No.
1▼#	1S2263	1 8k	800	101C	14k§	8.3m		150J	1.65	2.5k	25C		30m	150J	1 8k			Si△	M404
2#	FD1000A36	1 8k	800	101C	14k§	8.3m		150J	1 65	2.5k	25C		30m	150J	1.8k			Si△	M509
3♦	801PD180	1.8k†	800	120C	8.0k§	8.3m		200J	1.8	800 †	120C		16mØ	120C	1 8k			Si△	J200b
4	A540PN	1 8k	1.0k		10k			200J	1.08		150C		50m	200J	2 0k			Si△	M463
5▼#	YSD901P18K29	1 8k	1.7k	85C	23k	10m		150J	970m	1 8k	150J		30m	150J	1.8k			Si	S370
6	JAN1N3177,R	1 9k	175	150C	3.0k	8 3m		175C	1 4 †	750	25	50m	15	175C	1 6k			Si	DO9Ø
7#	S30N2000JA4	1.9k	320	100C	4 8k	10m		175J	1.25	600	25A	2 0m	30m	175C	1 9k			Si△	M378
8#	S19GR312	1 9k	340	100B	5.1k			155J	750mØ	340			25m		1.9k			Si△	M522
9#	S19HR312	1.9k	340	100B	5.1k			155J	750mØ	340			25m		1.9k			Si△	M523
10#	S19GR313	1.9k	360	100B	5 4k			155J	700mØ	360			25m		1.9k			Si△	M522
11#	S19HR313	1 9k	360	100B	5.4k			155J	700mØ	360			25m		1 9k			Si△	M523
12	CH1625	1.9k	500	120C	8.5k	8 3m		180S	1.2	500	140C		15m	120C	1.9k	2 3k		Si	F82Ø
13#	S19AR505	1.9k	510	100B	8 0k			150J	790mØ	550			20m		1.9k			Si△	M400a
14#	S19AR504	1 9k	535	100B	9 1k			150J	690mØ	550			20m		1 9k			Si△	M400a
15#	S9K2003K5	1 9k	640	85C	8.0k	10m		175J	1.35	1 2k	25A	2.0m	50m	175C	1 9k			Si△	Ø
16#	S9K2003K45	1 9k	660	85C	9 0k	10m		175J	1 3	1 2k	25A	2.0m	50m	175C	1 9k			Si△	Ø
17#	S9K2003K4	1 9k	680	85C	9 0k	10m		175J	1.25	1.2k	25A	2 0m	50m	175C	1 9k			Si△	Ø
18#	S16BR503	1 9k%	685	100B	10k			165J	675mØ	650			20m		1.6k			Si△	M429
19#	S9K2003K35	1 9k	720	85C	10k	10m		175J	1.2	1 2k	25A	2 0m	50m	175C	1 8k			Si△	Ø
20	A500PT	1.9k	800	95C	8.4k	8 3m		175J	1.36 Ø	1 0k	150C		30m	175J	1.9k			Si	M463
21	A540PT	1 9k	1.0k		10k			200J	1.08		150C		50m	200J	2.1k			Si△	M463
22▼	5K20	2 0k	5.0m	25	1 0	8 0m		150A	4 0	5.0m	25	1.0u	10u	100	2 0k			Si	DO7
23#	BYX11	2 0k	01	25	1 0	10m		125J	1 0	10	25	20u	10m	125	2.0k			Si	A171c
24	MC156	2.0k	01	25	1 0	8.0m			4.0	01	25	1 0u			2.0k			Si	A1db
25	MH402	2 0k	01	25					2.8	.01	25	02m	1m	100	2.0k			Si	A1at
26▼	10S20	2 0k	10m	55	1 0	8 3m	750m	150A	5 0	10m	25	1 0u	10u	100	2.0k			Si	A1df
27	2L20	2.0k	02	25	10	8 3m		175	2.0	02	25	5 0u	20m	100	2 0k			Si	A1hy
28	2L209	2 0k	02	25	10	8 3m		175	2.0	02	25	5 0u	20m	100	2.0k	3.0k	200u	Si	A1hy
29	MC155	2.0k	02	25	2 0	8 0m			3 0	02	25	1 0u			2.0k			Si	A1db
30▼	25K20	2 0k	25m	25	1 5	8.0m		150A	4 0	25m	25	1.0u	10u	100	2.0k			Si	DO7
31	PS3210	2 0k	025	25A	1 0 †	8 0m	30	125A	5 0	1.0	25	25u			2.0k			Si	A1mu
32	SCM20	2 0k	25m	55A	5 0			150A	5 0	25m	25A	100n	2.0u	100A	2 0k			Si	A1ru
33	HV20G	2.0k	30m	25	20	8 0m	30		10	10m	25	2 0u	10m	100	2.0k			Si	A1fs
34	MC154	2 0k	04	25	3 0	8 0m			2 0	04	25	1 0u			2.0k			Si	A1db
35	5L20	2 0k	05	25	10	8 3m		175	2 0	05	25	5 0u	20m	100	2.0k			Si	A1hy
36	5L209	2 0k	05	25	10	8 3m		175	2 0	05	25	5 0u	20m	100	2.0k	3 0k	200u	Si	A1hy
37▼	50K20	2.0k	50m	25	2 0	8 0m		150A	4 0	50m	25	1 0u	10u	100	2 0k			Si	DO7
38	PS2422	2.0k	05	25A$					6 0	5m	25A	10u			2 0k			Si	A1gb
39	VA20	2 0k	50m	40A	3 0	8 3m		150A	4 0	50m	25	50n	5 0u	100	2.0k			Si△	A1m
40	HV20A	2.0k	.05	50A	17 §	10m		175A	5 0		25	6 0u						Si	A3t
41	MV20A△	2 0k	05	50A	16 §	10m		175A	5 0	05	25A	6 0u			2.0k			Si	A3h
42▼	50S20	2 0k	50m	55	2 0	8.3m	750m	150A	5 0	50m	25	1 0u	10u	100	2.0k			Si	A1df
43	1N1732A	2.0k	50m	175$	9 0	8 0m		200A	3 0	400m	25	1 0u	12u	150	2.0k			Si	A1gd
44#	M20H	2.0k	08	25				125A	3 2	08			10m	55	2.0k			Si	A1mn
45	1N3284	2 0k	10	25A	2.5			150A	2 5	10	25A	1 0u	01m	100A	2 0k			Si△	DO7
46	10L20	2 0k	10	25	20	8 3m		175	2 0	10	25	5 0u	20m	100	2 0k			Si	A1hy
47	10L209	2 0k	10	25	20	8 3m		175	2 0	10	25	5 0u	20m	100	2.0k	3 0k	200u	Si	A1hy
48	10R20B	2.0k	100m	25	60			175	4.0	100m	25	5 0u	500u	150	2.0k				
49▼	100K20	2 0k	100m	25	2 5	8 0m		150A	3 0	100m	25	1.0u	10u	100	2.0k			Si	DO7
50#	HSC2	2.0k	10	25A$				150A	4 0	10	25A	5 0u			2.0k			Si	A1jg
51	HV20E2	2.0k	.10	25	1 0	8 0m	25	125A	2 0	10m	25	20n	3 0u	100	2.0k			Si	A83e
52	HV20P2	2.0k	100m	25	1 0	8 0m	250m	125A	2 0	10m	25	20n	3 0u	100	2 0k			Si	A94h
53	PS2419	2 0k	10	25A$					2 0	5m	25A	10u			2.0k			Si	C15
54#	ZHS101	2 0k	100m	25A			300m	150A	5.0	50m	25A	30n	5.0u	100A	2.0k			Si△	DO7
55#	ZHS102	2 0k	10	25A			30	150A	5 0	.05	25A	1 0u	02m	100A	2.0k			Si△	DO7
56#	ZHS103	2 0k	10	25A			30	150A	5 0	.05	25A	.10u	01m	100A	2.0k			Si△	DO7
57	VB20	2.0k	100m	40A	3 0	8 3m		150A	5 0	100m	25	50n	5.0u	100	2.0k			Si△	A1fc
58	EZ200	2 0k	10	50A	10			125A	9 0	.10	25A	2 0u	100u	100A	2 0k			Si	A3c
59▼	100S20	2.0k	100m	55	3 0	8.3m	750m	150A	5 0	100m	25	1 0u	10u	100	2 0k			Si	A1df
60	1N2376	2 0k	10	100A	12	8 3m		150A	7 5	.10	100A		100m	100A	600			Si	A1hg
61	1N1412	2 0k	125	75A	6 0			150	6 25	1 2	25	10u	10m	150A	2.0k			Si	A149
62	15L20	2 0k	15	25	20	8.3m		175	2 0	15	25	5 0u	20m	100	2 0k			Si	A1hy
63	15L209	2 0k	15	25	20	8 3m		175	2 0	15	25	5.0u	20m	100	2 0k	3 0k	200u	Si	A1hy
64#	M20HZ	2 0k	150m	25A	2 5	10m		125A	2 0	150m	25A	1.0u	25u	100A	2 0k			Si△	DO7
65	MHV2	2 0k	15	25A$	5 0			125A	4 5	15	25	1 0u			2 0k			Si	F8
66▼	HG2	2 0k	150m	55A	5 0	8.3		150A	3 0	100m	25A	5.0u	25	100A	2 0k			Si	A94j
67	1N1732	2 0k	20	25A$	2 5	8 0m		150A	9 0			10u	10m	100A	2 0k			Si	A1gd
68	20L20	2 0k	.20	25	20	8 3m		175	2 0	20	25	5.0u	20m	100	2 0k			Si	A1hy
69	20L209	2 0k	20	25	20	8.3m		175	2.0	20	25	5.0u	20m	100	2 0k	3 0k	200u	Si	A1hy
70	7701-2A	2 0k	20	25A	3 0	8.3m		125A	3 0	.05	25	1 0u	10m	125	2 0k			Si△	A1gd
71	HV20E1	2.0k	.20	25	1 0	8.0m	25	125A	1 0	10m	25	20n	3 0u	100	2 0k			Si	A83e
72	HV20P1	2 0k	200m	25	1 0	8 0m	250m	125A	1 0	10m	25	20n	3 0u	100	2 0k			Si	A94h
73	PS1142	2 0k†	.20	25A$	2 5 §	8 0m		175A	9 0	10	25A							Si	A1gd
74	SLA02	2 0k	200m	25				150	5 0	1 0		6 0u	75u	100	2 0k			Si	A1dj
75	SE1732	2.0k	.20	50A	3 0 §	10m		150A	7 0	20	25	2 5u	40m	100	2.0k			Si	A1jg
76♦	1N2890	2.0k	250m	25A				150S	4 0	250m	25A	500n			2 0k	2.8k		Si	M122a
77♦	1N2891	2 0k	250m	25A				150S	4 0	250m	25A	500n			2 0k	2 8k		Si	A83w
78	25L20	2.0k	.25	25	20	8 3m		175	2 0	25	25	5.0u	.20m	100	2.0k			Si	A1hy
79	25L209	2 0k	.25	25	20	8 3m		175	2 0	25	25	5.0u	20m	100	2 0k	3.0k	200u	Si	A1hy
80#	M20K	2 0k	.25	25A	2 0	1		150A	4.0	25 †	25	50u	03m	100A	2 0k			Si△	A83u
81	1N4513	2 0k	25	50A	20 §			175A	4 5	25	50A		.50m	175A	2 0k			Si	A52c
82	HV20B	2 0k	25	50A	17 §	10m		175A	5 0		25	6 0u						Si	A3t
83	MV20B	2.0k	25	50A	16 §	10m		175A	5 0	25	25A	6 0u			2 0k			Si	A3h
84	1N4255	2.0k	.25	55A	6.3	8 0m		175	3 5	10	55	1 0u	20m	125	2 0k			Si	A1eh
85	SC20	2 0k	.25	55A	10	8 3m		175	3 5	10	25A	1 0u	20u	100A	2.0k			Si	A1ds
86	SCE20	2 0k	.25	55A	10			175	3 5 △	10	25A	1 0u△	02m△	100A	2 0k			Si	A1sd
87	SLA02HF	2.0k	.25	60	20	8.3m		150	8 0	.30	50	5.0u	20m	100	2.0k			Si	A134d
88	BH200	2.0k	250m	75A	20	8.3m		150A	4 0 △	250m	25A	10u△			2 0k			Si	DO27
89	C2.0E4	2 0k	25	75	25	8 0m		150S	4 0	25		1 0u	10m	100	2 0k			Si	A3s
90	MR992A	2 0k$	250m	75A	15 §			150J	1 7	250m	75A	10u	100u	75A	2 0k			Si	A1dt
91	30L20	2 0k	.30	25	40	8 3m		175	2 0	30	25	5 0u	20m	100	2 0k			Si	A1hy
92	30L209	2 0k	.30	25	40	8 3m		175	2 0	30	25	5 0u	20m	100	2 0k	3 0k	200u	Si	A1hy
93	520	2 0k	300m	25	20	8 0m		150	3 5	300m	25	2 0u			2.0k			Si△	A79
94	DI520	2 0k	30	25A$	20	8.0m		100A	3 5	20	25	2 0u			2.0k			Si	A79a
95	PS1850	2 0k	.35	25				200A	3 0	40	25	1 0u	01		2.0k			Si	A1gd
96	DICR2	2 0k	350m	50	15	8 3m		150S	4 0	350m	25	2.0u			2 0k			Si	A1dm
97	EG200	2 0k	.35	50A	30			150A	3.0 △	35	25A	2 0u△	.10mØ	100A	2.0k			Si△	A3c
98▼	350S20	2 0k	350m	55	30	8 3m	1 0	150A	3 0	350m	25	1.0u	20u	100	2 0k			Si	A1tp
99	C2 0E3	2.0k	35	75	30	8 0m		150S	3 0	35		1 0u	10m	100	2 0k			Si	A3s
100	1N1111	2 0k	38	100	23	4 0m		150	7.5			2 0m			2 0k			Si	F22d
101	1N2361	2 0k	400m	25$	15			150	2 0	650m	25	1 0u			2.0k			Si	DO1
102	JAN1N2361	2 0k	.40	25A$	10			125A	2.0	40	25	5.0u			2 0k			Si	DO1
103	40L20	2 0k	.40	25	40	8 3m		175	2 0	40	25	5 0u	20m	100	2 0k			Si	A1hy
104	40L209	2 0k	40	25	40	8 3m		175	2.0	40	25	5 0u	20m	100	2.0k	3.0k	200u	Si	A1hy
105	F20	2 0k	.40	25	20	4 0m		140A	3 0	1.0	25	10u			2.0k				DO27
106	1N3188	2 0k	50	25A	4 0	1		150A	4 0	25	25	30u	.02m	100	2 0k			Si	M82c
107	1N3236	2.0k	500m	25$	12				3.3	500m			500u	160	2 0k			Si	A1cs
108	50L20	2 0k	50	25	40	8 3m		175	2.0	50	25	5 0u	.20m	100	2.0k			Si	A1hy
109	50L209	2 0k	50	25	40	8 3m		175	2.0	50	25	5 0u	.20m	100	2 0k	3 0k	200u	Si	A1hy
110	PS1442	2 0k	50	25A$	10	8 0m	2.8	175A	4.0	20	25A	1 0u	.05m	100A	2 0k			Si	F13a

SYMBOLS AND CODES EXPLAINED IN INTERPRETER

5. RECTIFIERS

IN ORDER OF (1) PIV, (2) MAX AVG FWD CURRENT (3) TEMPERATURE, and (4) TYPE No.

LINE No.	4 TYPE No.	1 PIV (V)	MAX AVG FWD DC CURRENT 2 Io (A)	3 at TEMP (°C)	MAX RATINGS @ 25°C SURGE CUR. PEAK 1 Cy (A)	PULSE WIDTH (s)	DISS. (W)	MAX. TEMP (°C)	MAXIMUM FORWARD VOLTAGE DROP Vf (V)	at If (A)	at TEMP (°C)	MAX. REVERSE CURRENT Ir @25°C & Vr (A)	Ir at T & Vr (A)	TEMP T (°C)	TEST VOLT Vr (V)	AVALANCHE RATINGS MAX V BKDN. (V)	MIN SLOPE (A/V)	DESCRIPTION MAT.	DWG. No.
1	SLDHV2	2 0k	.50	25A	22			175A	3 0		25							Si	M239a
2	SCBR20A	2.0k	50	30C	5 0			150										Si	M45c*
3	DER2	2.0k	500m	50	40	8 3m	2.0	150S	4.0	500m	25	2.0u	20u	125	2.0k			Si	A1dm
4	DI520LS	2 0k	.50	50A	40	8.0m		125	3 4	50	25A	5 0u			2.0k			Si	C42e
5	HV20C	2.0k	50	50A	17 §	10m		175A	5.0		25	6.0u						Si	A3t
6	MV20C	2 0k	50	50A	16 §	10m		175A	5 0	.50	25A	6.0u			2.0k			Si	A3h
7▼	500S20	2 0k	500m	55	35	8.3m	1 0	150A	2 0	500m	25	1.0u	20u	100	2.0k			Si	A1tp
8	C2 0E2	2.0k	50	75	35	8 0m		150S	2 0	.50		1 0u	10m	100	2.0k			Si	A3s
9	60L20	2.0k	60	25	40	8 3m		175	2.0	.60	25	5.0u	20m	100	2.0k			Si	A1hy
10	60L209	2.0k	60	25	40	8 3m		175	2 0	.60	25	5.0u	20m	100	2.0k	3 0k	200u	Si	A1hy
11	820C	2 0k	600m	25	50	8 0m		150	4 0	600m	25	5 0u	25u	100	2.0k			Si△	M519
12	US20	2 0k	60	25	20	8.3m		150A	4 0	.40	25	2.0u	.10m	100	2.0k			Si	A1fv
13	DI820C	2.0k	600m	40A	50	8 3m		150J	4.0	600m	25	5 0u	25u	100	2.0k			Si	C42l
14	B223-20	2.0k	70	25	60			175A	1.0		150	5.0u	50m	150A				Si	A1rx
15	75R20B	2.0k	750m	25	60			175	4 0	750m	25	5.0u	500u	150	2.0k				
16	SLA02HC	2 0k	750m	75	50	8 3m		150A	6.0	1 0	25	5 0u	100u	100	2.0k			Si	A134d
17	80L20	2 0k	80	25	60	8 3m		175	2.0	80	25	5.0u	.20m	100	2.0k			Si	A1hy
18	80L209	2.0k	.80	25	60	8 3m		175	2.0	.80	25	5.0u	.20m	100	2.0k	3.0k	200u	Si	A1hy
19	CR102	2.0k	825	60A	15			125A	2.4 Ø	83	60A	600u△	30m⊘	60A	2.0k			Si△	M100a⊘
20	1N2370	2 0k	1.0	25	15			150	2 0	1 5	25	1.0u			2.0k			Si	DO4
21	1N2371	2.0k	1 0	25	15			150	2 0	1.5	25	1.0u			2.0k			Si	S117
22	100L20	2.0k	1.0	25	60	8 3m		175	2 0	1 0	25	5 0u	.20m	100	2.0k			Si	A1hy
23	100L209	2.0k	1.0	25	60	8 3m		175	2.0	1 0	25	5 0u	.20m	100	2.0k	3.0k	200u	Si	A1hy
24	100R20B	2 0k	1.0	25	60			175	4.0	1.0	25	5.0u	500u	150	2.0k				
25	SLA2000A	2.0k	1 0	25	60	8.3m		150A	1.0	1 0	25	1 0u	10m	100	2.0k			Si	A69
26	SLA2000B	2.0k	1 0	25	60	8 3m		150A	1.0	1.0	25	1.0u	15m	100	2.0k			Si	A69
27	SLA2000C	2.0k	1.0	25	60	8 3m		150A	1.0	1.0	25	5.0u	.25m	100	2.0k			Si	A69
28	SCBR20	2.0k	1 0	30C	20			150										Si	M45b*
29	1B20	2 0k	1.0	50C$	11			150C	2.0	1 0	25	2.0u	05m	100	2 0k			Si	M79
30	1C20	2.0k	1.0	50C$	11			150C	2.0	1 0	25	2.0u	.05m	100	2.0k			Si	M116a
31	1F20	2.0k	1 0	50C$	18			150C	1.1	1.0	25	2.0u	.05m	100	2 0k			Si	F22
32	1D20	2.0k	1.0	75C	35			150C	2.0	1.0	50C	2 0u	05m	100C	2 0k			Si	M116*
33	PS2349	2.0k	1 1	25A$				175A	4.0	.20	25A	6.0u			2 0k			Si	M22
34	SLD2	2.0k	1 1	30A	50			125A	3.7	1 1	25A	10u			2 0k			Si△	M239a
35	1N2662	2 0k	1.5	25A	15	8 3m		165A	6.5	1.5	25A	800u			2.0k			Si	M126c
36	150R20B	2.0k	1.5	25	60			175	4.0	1 5	25	5.0u	500u	150	2.0k				
37	BR820A†	2.0k	1 50	25	50	8.0m		150	4.00	.75	25	5.0u			2.0k			Si△	M540
38	2ASLD2	2.0k	2.0	25A	200			175A	3.0		25							Si	M239a
39	200R20B	2.0k	2.0	25	60			175	4.0	2 0	25	5.0u	500u	150	2.0k				
40	SLA34A	2 0k	2 0	25	80	8 3m		150A	.95	2 0	25	1.0u	.10m	100	2.0k			Si	A69
41	SLA34B	2.0k	2.0	25	80	8 3m		150A	.95	2 0	25	1 0u	.15m	100	2.0k			Si	A69
42	SLA34C	2.0k	2.0	25	80	8 3m		150A	1.0	2.0	25	5.0u	.25m	100	2.0k			Si	A69
43	VC20⊘	2 0k†	2.0	40C	50			125A	4.0	10	25	1.0u	1.0m	125A	2.0k			Si△	M430
44	250R20B	2.0k	2.5	25	250			175	4.0	2.5	25	10u	1.0m	150	2.0k				
45	1N2723	2.0k	3.0	25A	15	8.3m		165A	6.5	3.0	25A	800u			2.0k			Si	M126g
46	300R20B	2.0k	3 0	25	250			175	4.0	3 0	25	10u	1.0m	150	2.0k				
47	SODSLD2	2.0k	3.0	30A	290			140A	3 0	30	25A	25u			2.0k			Si△	M239t
48	350R20B	2.0k	3.5	25	250			175	4 0	3.5	25	10u	1.0m	150	2.0k				
49	400R20B	2.0k	4.0	25	250			175	4 0	4.0	25	10u	1.0m	150	2.0k				
50	450R20B	2 0k	4.5	25	250			175	4 0	4.5	25	10u	1.0m	150	2.0k				
51	1N2370A	2.0k	5 0	25	20			150	2.0	8.0	25	1.0u			2.0k			Si	DO4
52	1N2371A	2.0k	5.0	25	20			150	2.0	8.0	25	1.0u			2 0k			Si	S117
53	500R20B	2 0k	5 0	25	250			175	4 0	5.0	25	10u	1.0m	150	2 0k				
54	1N3921	2.0k	5 0	100C	100	8.3m		200C	2.0	5 0	100C		.50m	100C	2.0k			Si	DO4
55	550R20B	2 0k	5.5	25	250			175	4.0	5.5	25	10u	1.0m	150	2.0k				
56	SCPH4	2 0k	5.5	55A	300			150A	4.0	3.0	25A	110u	200u	100A	2.0k			Si	M496
57	600R20B	2.0k	6.0	25	250			175	4.0	6 0	25	10u	1.0m	150	2.0k				
58#	BYX47	2.0k	6 0	125C	90	10m		175J	2.0	50m	25A	20n	300u	50	2.0k			Si	DO7
59	1N2370B	2.0k	10	25B	25			150	2.0	15	25	1.0u			2.0k			Si	DO4
60	1N2371B	2.0k	10	25C$	25			150	2.0	15	25	1.0u			2.0k			Si	S117
61	SCPD8	2 0k	11	55A	300			150A	4.0	3.0	25A	110u	200u	100A	2.0k			Si	M496
62	SCPN8	2.0k	11	55A	300			150A	4 0	3.0	25A	110u	200u	100A	2.0k			Si	M496
63	SCPP8	2.0k	11	55A	300			150A	4.0	3.0	25A	110u	200u	100A	2.0k			Si	M496
64#	SR70C40	2.0k	70	119C	1.5k§	8.3m		150J	1.6	220	25C		30m	150J	2.0k			Si△	S333
65	JAN1N3645	2.0k$	100	100	14	8.0m		175S	5 0	25	25	5.0u	.10m	100	2.0k			Si	Z55
66#	SR200P40	2.0k	240	75C	5 0k§	8.3m		150J	1.73	750	25C		30m	150J	2.0k			Si△	S298⊘
67#	FD250A40	2.0k	250	111C	5.0k§	8 3m		150J	1.75	780	25C		30m	150J	2.0k			Si△	M567
68#	TA3020R	2.0k	300	100C	6.0k	10m			1.4	1 0k			15m	150C	2.0k				S316
69	301U200	2.0k†	300	120C	6 2k§	8.3m		200J	1.62	300 †	120C		20m⊘	120C	2.0k			Si△	DO9
70	301UR200	2.0k†	300	135C	6 2k§	8.3m		200J	1 62	300 †	135C		20m⊘	135C	2.0k			Si△	DO9
71	CH1516	2.0k	320	120C	3.5k	8.3m		200S	1.7	320	140C		10m	120C	2.0k	2.5k		Si	DO9⊘
72#	S20GR312	2.0k	340	100B	5.1k			155J	750mØ	340			25m		2.0k			Si△	M522
73#	S20HR312	2.0k	340	100B	5.1k			155J	750mØ	340			25m		2.0k			Si△	M523
74#	DSA250-20L	2.0k	350		4 5k	10m	20	150	1.50										
75#	300YD11	2.0k	350	90B	6 5k	10m		150J	1.42	1k	25A		20m	150J	2.0k			Si	S12b
76#	S20GR313	2.0k	360	100B	5.4k			155J	700mØ	360			25m		2.0k			Si△	M522
77#	S20HR313	2.0k	360	100B	5 4k			155J	700mØ	360			25m		2.0k			Si△	M523
78#	SR400A40	2.0k	400	89C	8.0k§	8.3m		150J	1.80	1.2k	25C		40m	150J	2.0k			Si△	S12d
79#	SR400C40	2.0k	400	98C	10k§	8 3m		150J	1.55	1.2k	25C		30m	150J	2.0k			Si△	S310
80▼#	BYX51-2000	2 0k	400	115C	6 0k§	10m		190J	1.5	1.2k	25J		30m	175J	2.0k			Si△	M294b⊘
81#	SSiN20120	2.0k	450	88C	8.0k	10m		160J	1.3	1.0k	25J	200u	6.0m	160J	2.0k			Si△*	S12a#
82#	SSiN98110	2.0k	450	90C	8.5k	10m		150J	1.55	1.4k	25J		50m	150J				Si△*	M572a
83♦	471PD200	2.0k†	470	105C	6 2k§	8 3m		200J	2.0	470 †	105C		20mØ	105C	2.0k			Si△	J200a
84#	DSA400-20L	2 0k	475		8.5k	10m		140	7.20										
85	783ZZ	2.0k	485	130C	5.0k	8.3m		190J	1.9	400	130C		10m⊘	130C	2.0k			Si	
86	501V200	2 0k	500	105C	8.0k§	8.3m		200J	1.45	500 †	105C		16mØ	105C	2.0k			Si△	S120g⊘
87	501VR200	2.0k	500	120C	8.0k§	8.3m		200J	1.45	500 †	120C		16mØ	120C	2.0k			Si△	S120g⊘
88#	S20AR505	2.0k	510	100B	8.0k			150J	790mØ	550			20m		2.0k			Si△	M400a
89#	S20AR504	2.0k	535	100B	9.1k			150J	690mØ	550			20m		2.0k			Si△	M400a
90▼#	1S2253	2.0k	600	93C	10k§	8.3m		150J	1.85	1.9k	25C		30m	150J	2.0k			Si△	M566
91#	FD500E40	2.0k	600	93C	10k§	8.3m		150J	1.85	1.9k	25C		30m	150J	2.0k			Si△	M566
92▼#	SiD300P20K44	2 0k	600	95B	7.1k	10m		175J	1.33	1.0k	150J		20m	175J	2.0k			Si	S368
93▼#	SiB300P20K35	2.0k	600	105B	8.4k	10m		185J	1.15	1 0k	150J		18m	185J	2.0k			Si	S367
94▼#	Si250P20K38	2.0k	630	105B	6.0k	10m		185J	1.22	1.0k	150J		18m	185J	2.0k			Si	S364
95#	S9K2103K5	2 0k	640	85C	8.0k	10m		175J	1.35	1.2k	25A	2.0m	50m	175C	2.0k			Si△	⊘
96#	S9K2103K45	2.0k	660	85C	9 0k	10m		175J	1.3	1.2k	25A	2.0m	50m	175C	2.0k			Si△	⊘
97#	S9K2103K4	2.0k	680	85C	9.0k	10m		175J	1.25	1.2k	25A	2.0m	50m	175C	2.0k			Si△	⊘
98#	S17BR503	2.0k%	685	100B	10k			165J	675mØ	650			20m		1.7k			Si△	M429
99#	D400-2000	2.0k	700	65C	8.0k§	10m		150J	1.15	400	25J	10m		25J	2.0k			Si	M486b%
100▼#	Si300P20K44	2 0k	700	95B	7.1k	10m		175J	1.33	1.0k	150J		18m	175J	2 0k			Si	S366
101	A500L	2 0k	800	95C	8 4k	8.3m		175J	1 36 Ø	1.0k	150C		30m	175J	2.0k			Si	M463
102▼#	1S2264	2.0k	800	101C	14k§	8.3m		150J	1.65	2.5k	25C		30m	150J	2.0k			Si△	M404
103#	FD1000A40	2.0k	800	101C	14k§	8.3m		150J	1.65	2.5k	25C		30m	150J	2.0k			Si△	M509
104#	V2059Z	2.0k	800	103C	12k	20m		150J	1.6	2.5k	25	10m	25m	150J	2.0k				M484
105♦	801PD200	2.0k†	800	120C	8.0k§	8.3m		200J	1.8	800 †	120C		16mØ	120C	2.0k			Si△	J200b
106	A540L	2.0k	1.0k		10k			200J	1 08		150C		50m	200J	2.2k			Si△	M463
107▼#	YSD901P20K29	2.0k	1 7k	85C	23k	10m		150J	970m	1.8k	150J		30m	150J	2.0k			Si	S370
108♦	1N2892	2.1k	250m	25A				150S	6.0	250m	25A	500n			2.1k	4.2k		Si	A122b
109♦	1N2893	2.1k	250m	25A				150S	6.0	250m	25A	500n			2.1k	4.2k		Si	A83ak
110#	S21GR312	2.1k	340	100B	5.1k			155J	750mØ	340			25m		2.1k			Si△	M522

SYMBOLS AND CODES EXPLAINED IN INTERPRETER

5. RECTIFIERS

IN ORDER OF (1) PIV, (2) MAX AVG FWD CURRENT (3) TEMPERATURE, and (4) TYPE No.

LINE No.	4 TYPE No.	1 PIV (V)	MAX AVG FWD DC CURRENT 2 Io (A)	3 at TEMP (°C)	MAX RATINGS @ 25°C SURGE CUR. PEAK 1 Cy (A)	PULSE WIDTH (s)	DISS. (W)	MAX. TEMP (°C)	MAXIMUM FORWARD VOLTAGE DROP Vf (V)	at If (A)	at TEMP (°C)	MAX. REVERSE CURRENT Ir @25°C & Vr (A)	Ir at T & Vr (A)	TEMP T (°C)	AVALANCHE RATINGS TEST VOLT Vr (V)	MAX V BKDN. (V)	MIN SLOPE (A/V)	DESCRIPTION MAT.	DWG. No.
1#	S21HR312	2.1k	340	100B	5.1k			155J	750mØ	340			25m		2.1k			Si△	M523
2#	S21GR313	2.1k	360	100B	5.4k			155J	700mØ	360			25m		2 1k			Si△	M522
3#	S21HR313	2.1k	360	100B	5.4k			155J	700mØ	360			25m		2.1k			Si△	M523
4	CH1611	2 1k	470	120C	5 2k	8.3m		180S	1.8	470	140C		20m	120C	2.1k	2 6k		Si	F81Ø
5	501V210	2 1k	500	105C	8.0k§	8.3m		200J	1.45	500 †	105C		16mØ	105C	2.1k			Si△	S120gØ
6	501VR210	2.1k	500	120C	8.0k§	8.3m		200J	1.45	500 †	120C		16mØ	120C	2.1k			Si△	S120gØ
7#	S21AR505	2.1k	510	100B	8.0k			150J	790mØ	550			20m		2.1k			Si△	M400a
8#	S21AR504	2 1k	535	100B	9 1k			150J	690mØ	550			20m		2.1k			Si△	M400a
9#	S9K2203K5	2.1k	640	85C	8.0k	10m		175J	1.35	1.2k	25A	2.0m	50m	175C	2.1k			Si△	Ø
10#	S9K2203K45	2.1k	660	85C	9 0k	10m		175J	1 3	1.2k	25A	2.0m	50m	175C	2.1k			Si△	Ø
11#	S9K2203K4	2.1k	680	85C	9 0k	10m		175J	1 25	1 2k	25A	2.0m	50m	175C	2.1k			Si△	Ø
12#	S18BR503	2 1k%	685	100B	10k			165J	675mØ	650			20m		1.8k			Si△	M429
13	A500LA	2 1k	800	95C	8 4k	8 3m		175J	1.36 Ø	1.0k	150C		30m	175J	2.1k			Si	M463
14	10R22B	2.2k	.10	25	60			175	6.0	.10	25	5.0u	.50m	150	2.2k			Si	
15	1N2328	2 2kØ	.40	25	4 0		1 0	150A	3 3	.40	25	1 5u			1.5k	3 3k		Si△	A154
16#	0954	2.2k*	500m	50A$	30			150J	4.8 △	500m	25A	1.0u			2.0k			Si*	A1pc △
17	75R22B	2.2k	75	25	60			175	6 0	75	25	5 0u	50m	150	2.2k			Si	
18	100R22B	2.2k	1 0	25	60			175	6.0	1.0	25	5.0u	.50m	150	2.2k			Si	
19	150R22B	2.2k	1.5	25	60			175	6 0	1.5	25	5.0u	.50m	150	2.2k			Si	
20	200R22B	2.2k	2.0	25	60			175	6.0	2 0	25	5.0u	.50m	150	2.2k			Si	
21	250R22B	2.2k	2.5	25	250			175	6 0	2.5	25	10u	1.0m	150	2.2k			Si	
22	300R22B	2 2k	3 0	25	250			175	6 0	3 0	25	10u	1.0m	150	2.2k			Si	
23	350R22B	2.2k	3 5	25	250			175	6 0	3 5	25	10u	1.0m	150	2.2k			Si	
24	400R22B	2 2k	4.0	25	250			175	6 0	4.0	25	10u	1.0m	150	2.2k			Si	
25	450R22B	2 2k	4 5	25	250			175	6.0	4.5	25	10u	1 0m	150	2.2k			Si	
26	500R22B	2 2k	5.0	25	250			175	6 0	5 0	25	10u	1.0m	150	2.2k			Si	
27	550R22B	2 2k	5 5	25	250			175	6 0	5.5	25	10u	1.0m	150	2.2k			Si	
28	600R22B	2 2k	6 0	25	250			175	6.0	6.0	25	10u	1 0m	150	2.2k			Si	
29#	SSiL20120	2 2k	250	94C	4 8k	10m		160J	1.46	785	25J		15m	160J				Si△*	S345
30#	TA3022R	2.2k	300	100C	6.0k	10m			1.4	1 0k			15m	150C	2.2k				S316
31	301U220	2 2k†	300	120C	6 2k§	8 3m		200J	1.6	300 †	120C		20mØ	120C	2.2k			Si	DO9Ø
32#	S22GR312	2 2k	340	100B	5 1k			155J	750mØ	340			25m		2.2k			Si△	M522
33#	S22HR312	2.2k	340	100B	5 1k			155J	750mØ	340			25m		2.2k			Si△	M523
34#	S22GR313	2 2k	360	100B	5.4k			155J	700mØ	360			25m		2.2k			Si△	M522
35#	S22HR313	2 2k	360	100B	5.4k			155J	700mØ	360			25m		2.2k			Si△	M523
36#	SSiN98120	2 2k	450	90C	8.5k	10m		150J	1.55	1.4k	25J		50m	150J				Si△*	M572a
37	501V220	2 2k	500	105C	8 0k§	8 3m		200J	1.45	500 †	105C		16mØ	105C	2.2k			Si△	S120gØ
38	501VR220	2.2k	500	120C	8 0k§	8.3m		200J	1.45	500 †	120C		16mØ	120C	2.2k			Si△	S120gØ
39#	S22AR505	2 2k	510	100B	8 0k			150J	790mØ	550			20m		2.2k			Si△	M400a
40#	S22AR504	2.2k	535	100B	9 1k			150J	690mØ	550			20m		2.2k			Si△	M400a
41▼#	SiD300P22K44	2 2k	600	95B	7 1k	10m		175J	1.33	1 0k	150J		20m	175J	2.2k			Si	S368
42#	S9K2303K5	2.2k	640	85C	8 0k	10m		175J	1.35	1.2k	25A	2 0m	50m	175C	2 2k			Si△	Ø
43#	S9K2303K45	2.2k	660	85C	9 0k	10m		175J	1.3	1.2k	25A	2 0m	50m	175C	2.2k			Si△	Ø
44#	S9K2303K4	2 2k	680	85C	9.0k	10m		175J	1 25	1.2k	25A	2 0m	50m	175C	2.2k			Si△	Ø
45#	D400-2200	2.2k	700	65C	8 0k§	10m		150J	1.15	400	25J	10m		25J	2.2k			Si	M486b%
46#	D400-2400	2.2k	700	65C	8 0k§	10m		150J	1.15	400	25J	10m		25J	2 4k			Si	M486b%
47▼#	Si300P22K44	2.2k	700	95B	7 1k	10m		175J	1 33	1 0k	150J		18m	175J	2 2k			Si	S366
48	A500LB	2.2k	800	95C	8 4k	8.3m		175J	1.36 Ø	1 0k	150C		30m	175J	2 2k			Si	M463
49▼#	YSD902P22K38	2 2k	1 5k	85C	22k	10m		150J	1 21	1.8k	150J		30m	150J	2 2k			Si	S370
50#	S23GR312	2 3k	340	100B	5 1k			155J	750mØ	340			25m		2.3k			Si△	M522
51#	S23HR312	2.3k	340	100B	5 1k			155J	750mØ	340			25m		2.3k			Si△	M523
52#	DSA250-23L	2 3k	350		3 5k	10m	20	150	1 70										
53	CH1612	2 3k	450	120C	5.2k	8.3m		180S	1.8	450	140C		20m	120C	2.3k	2.9k		Si	F81Ø
54#	DSA400-23L	2 3k	475		8 5k	10m		140	7 20										
55	501V230	2 3k	500	105C	8 0k§	8.3m		200J	1.45	500 †	105C		16mØ	105C	2.3k			Si△	S120gØ
56	501VR230	2.3k	500	120C	8 0k§	8.3m		200J	1.45	500 †	120C		16mØ	120C	2.3k			Si△	S120gØ
57#	S23AR505	2.3k	510	100B	8 0k			150J	790mØ	550			20m		2.3k			Si△	M400a
58#	S9K2403K5	2 3k	640	85C	8 0k	10m		175J	1.35	1 2k	25A	2.0m	50m	175C	2.3k			Si△	Ø
59#	S9K2403K45	2 3k	660	85C	9 0k	10m		175J	1.3	1.2k	25A	2 0m	50m	175C	2 3k			Si△	Ø
60	A500LC	2 3k	800	95C	8 4k	8 3m		175J	1 36 Ø	1.0k	150C		30m	175J	2.3k			Si	M463
61	1N1137	2.4k	.005	75	3 5	5.0m		170	24	57m	50		.20m	50	2 4k			Si	F57d
62	HV24A	2 4k	05	50A	17 §	10m		175A	5.0		25	6.0u						Si	A3t
63	MV24A	2 4k	.05	50A	16 §	10m		175A	5.0	05	25A	6 0u			2 4k			Si	A3h
64	1N1138	2 4k	06	75	3.5	5 0m		170	12	70m	50		.20m	50	2.4k			Si	F57e
65	P1RP24	2 4k	.075	75A$	15			150S	21	08	25	5.0u			2 4k			Si	A1ky
66	1N2377	2 4k	75m	100A	12	8 3m		150A	9.0	75m	100A		100m	100A	600			Si	A1hq
67	10R24B	2 4k	.10	25	60			175	6.0	10	25	10u	1.0m	150	2 4k			Si	
68	1N1413	2 4k	125	75A$	6 0			150	7.5	1 2	25	10u	.10m	150A	2 4k			Si	A149
69	HV24B	2 4k	.20	50A	17 §	10m		175A	5.0		25	6 0u						Si	A3t
70	MV24B	2 4k	20	50A	16 §	10m		175A	5.0	.20	25A	6 0u			2.4k			Si	A3h
71♦	1N2894	2 4k	250m	25A				150S	7.0	250m	25A	500n			2 4k	4 9k		Si	M122b
72♦	1N2895	2.4k	250m	25A				150S	7.0	250m	25A	500n			2.4k	4.9k		Si	A83ak
73	HVC240	2.4k	25	55A	7 5			150	5.0	25	25	10u			2 4k			Si	M291a
74	1N1749	2.4k	32	75C$	6 0			150	24	.60	25	25u			2.4k			Si	F12s
75	1N1112	2.4k	.35	100	21	4 0m		150	9.0			2 0m			2.4k			Si	F22e
76	1N1750	2.4k	.38	75C$	6 0			150	12	60	25	25u			2.4k			Si	F12r
77	HV24C	2.4k	.40	50A	17 §	10m		175A	5.0		25	6 0u						Si	A3t
78	MV24C	2 4k	40	50A	16 §	10m		175A	5.0	40	25A	6.0u			2.4k			Si	A3h
79	A1423PBH2AB1	2.4k	530m	50A				150A	3.6	100m	25	5.0u	100u	150A	2.4k			Si	M212d
80	A1425PBH2AB1	2.4k	540m	50A				150A	3.6	100m	25	5.0u	100u	150A	2.4k			Si	A1ga
81	A1423PBC2AB1	2.4k	620m	50A				150A	3.6	100m	25	5.0u	100u	150A	2.4k			Si	M205j
82	A1425MH4AB1	2.4k	650m	50A				150A	3.6	100m	25	5 0u	100u	150A	2 4k			Si	A1jc
83	A1423MH4AB1	2.4k	670m	50A				150A	3.6	100m	25	5 0u	100u	150A	2.4k			Si	M212
84	75R24B	2 4k	75	25	60			175	6.0	75	25	10u	1 0m	150	2.4k			Si	
85	A1423MC4AB1	2 4k	840m	50A				150A	3.6	100m	25	5 0u	100u	150A	2 4k			Si	M205m
86	100R24B	2 4k	1 0	25	60			175	6.0	1 0	25	10u	1.0m	150	2 4k			Si	
87	1N2664	2.4k	1 5	25A	15	8 3m		165A	7.8	1 5	25A	800u			2 4k			Si	M126c
88	150R24B	2.4k	1 5	25	60			175	6.0	1 5	25	10u	1 0m	150	2.4k			Si	
89	200R24B	2.4k	2.0	25	60			175	6.0	2.0	25	10u	1.0m	150	2 4k			Si	
90	250R24B	2.4k	2.5	25	250			175	6 0	2 5	25	10u	1 0m	150	2.4k			Si	
91	1N2724	2.4k	3 0	25A	15	8 3m		165A	7.8	3 0	25A	800u			7.4k			Si	M126j
92	300R24B	2.4k	3.0	25	250			175	6 0	3.0	25	10u	1.0m	150	2 4k			Si	
93	1N4538	2.4k*	3 0	100C	15 §	8 3m		175C	1.85	3 0	100C		2 0m	175C	2.0k			Si	DO4
94	350R24B	2 4k	3 5	25	250			175	6 0	3.5	25	10u	1.0m	150	2.4k			Si	
95	400R24B	2 4k	4 0	25	250			175	6 0	4 0	25	10u	1.0m	150	2.4k			Si	
96	450R24B	2.4k	4 5	25	250			175	6 0	4 5	25	10u	1.0m	150	2.4k			Si	
97	500R24B	2 4k	5 0	25	250			175	6 0	5 0	25	10u	1.0m	150	2 4k			Si	
98	CR301	2 4k†	5 0	50A	250	8 3m		125A	5.4	50	25A	2 0m	2 0m	125A	2 4k			Si△	M503
99	550R24B	2.4k	5 5	25	250			175	6 0	5.5	25	10u	1 0m	150	2.4k			Si	
100	600R24B	2 4k	6.0	25	250			175	6.0	6 0	25	10u	1.0m	150	2 4k			Si	
101	CR311	2.4k†	9 0	50A	250	8 3m		125A	5.4	50	25A	2.0m	2 0m	125A	2.4k			Si△	M503
102	CR321	2 4k†	12	50A	400	8 3m		125A	5.68	90	25A	2 0m	2.0m	125A	2.4k			Si△	M503g
103	CR331	2.4k†	17	50A	400	8 3m		125A	5.68	90	25A	2 0m	2 0m	125A	2 4k			Si△	M503g
104	CR341	2 4k†	23	50A	850	8 3m		125A	5.76	120	25A	2.0m	2.0m	125A	2 4k			Si△	M503l
105	CR351	2.4k†	35	50A	850	8 3m		125A	5.76	120	25A	2.0m	2 0m	125A	2.4k			Si△	M503l
106#	S24GR314	2 4k	300	100B	5 0k			150J	740mØ	300			25m		2 4k			Si△	M522
107#	S24HR314	2 4k	300	100B	5 0k			150J	740mØ	300			20m		2.4k			Si△	M523
108#	TA3024R	2 4k	300	100C	6.0k	10m			1 4	1 0k			15m	150C	2 4k				S316
109	301U240	2 4k†	300	120C	6 2k§	8 3m		200J	1 6	300 †	120C		20mØ	120C	2 4k			Si	DO9Ø
110	CH1517	2 4k	300	120C	3 5k	8 3m		200S	1 8	300	140C		10m	120C	2 4k	3 0k		Si	DO9Ø

SYMBOLS AND CODES EXPLAINED IN INTERPRETER

5. RECTIFIERS

IN ORDER OF (1) PIV, (2) MAX AVG FWD CURRENT (3) TEMPERATURE, and (4) TYPE No.

LINE No.	4 TYPE No.	1 PIV (V)	MAX AVG FWD DC CURRENT 2 Io (A)	3 at TEMP (°C)	MAX RATINGS @ 25°C SURGE CUR PEAK 1 Cy (A)	PULSE WIDTH (s)	DISS. (W)	MAX. TEMP (°C)	MAXIMUM FORWARD VOLTAGE DROP Vf (V)	at If (A)	at TEMP (°C)	MAX. REVERSE CURRENT Ir @25°C & Vr (A)	Ir at T & Vr (A)	TEMP T (°C)	TEST VOLT Vr (V)	AVALANCHE RATINGS MAX V BKDN. (V)	MIN SLOPE (A/V)	MAT.	DESCRIPTION DWG. No
1#	SSiN98135	2 4k	450	90C	8 5k	10m		150J	1 55	1.4k	25J		50m	150J				SiΔ*	M573
2	501V240	2 4k	500	105C	8 0k§	8 3m		200J	1.45	500 †	105C		16mØ	105C	2.4k			SiΔ	S120g☑
3	501VR240	2 4k	500	120C	8 0k§	8.3m		200J	1 45	500 †	120C		16mØ	120C	2.4k			SiΔ	S120g☑
4#	S24AR505	2.4k	510	100B	8 0k			150J	790mØ	550			20m		2 4k			SiΔ	M400a
5▼#	SiD300P24K44	2 4k	600	95B	7 1k	10m		175J	1.33	1 0k	150J		20m	175J	2 4k			Si	S368
6#	S9K2503K5	2 4k	640	85C	8 0k	10m		175J	1 35	1.2k	25A	2.0m	50m	175C	2 4k			SiΔ	☑
7#	S9K2503K45	2 4k	660	85C	9 0k	10m		175J	1 3	1 2k	25A	2.0m	50m	175C	2 4k			SiΔ	☑
8▼#	Si300P24K44	2 4k	700	95B	7 1k	10m		175J	1.33	1.0k	150J		18m	175J	2 4k			Si	S366
9	A500LD	2 4k	800	95C	8 4k	8 3m		175J	1.36 Ø	1.0k	150C		30m	175J	2.4k			Si	M463
10▼#	YSD902P24K38	2 4k	1 5k	85C	22k	10m		150J	1 21	1 8k	150J		30m	150J	2 4k			Si	S370
11	MH403	2.5k	.01	25					3.0	01	25	.50u	.02m	100	2 5k			Si	A1at
12	HW2G	2 5k	01	150					8.0	01	25	2.0u			2 0k			Si	A1gk
13	2L25	2 5k	.02	25	10	8 3m		175	3.0	02	25	5 0u	.20m	100	2 5k			Si	A1jz
14	2L259	2 5k	20m	25	10	8 3m		175	3.0	20m	25	5 0u	200u	100	2.5k	3 7k	200u	Si	A1jz
15	SCM25	2.5k	25m	55A	5 0			150A	5.0	25m	25A	100n	2.0u	100A	2.5k			Si	A1ru
16	5L25	2 5k	05	25	10	8.3m		175	3 0	05	25	5.0u	.20m	100	2 5k			Si	A1jz
17	5L259	2.5k	50m	25	10	8 4m		175	3 0	50m	25	5.0u	200u	100	2 5k	3 7k	200u	Si	A1jz
18	VA25	2 5k	50m	40A	3 0	8 3m		150A	4 0	50m	25	50n	5 0u	100	2.5k			SiΔ	A1m
19	1N3285	2 5k	10	25A	2 5			150A	2 5	10	25A	1 0u	.01m	100A	2 5k			SiΔ	DO7
20	10L25	2 5k	.10	25	20	8 3m		175	3 0	10	25	5.0u	.20m	100	2.5k			Si	A1jz
21	10L259	2 5k	100m	25	20	8 3m		175	3.0	100m	25	5 0u	200u	100	2.5k	3.7k	200u	Si	A1jz
22	HV25E2	2 5k	.10	25	1 0	8.0m	.25	125A	2.0	10m	25	20n	3.0u	100	2.5k			Si	A83e
23	HV25P2	2 5k	100m	25	1 0	8 0m	250m	125A	2.0	10m	25	20n	3 0u	100	2.5k			Si	A94h
24	VB25	2 5k	100m	40A	3 0	8 3m		150A	5 0	100m	25	50n	5.0u	100	2.5k			SiΔ	A1fc
25	EZ250	2.5k	10	50A	10			125A	9.0	.10	25A	2.0u	100u	100A	2.5k			Si	A3c
26	15L25	2 5k	15	25	20	8.3m		175	3 0	15	25	5.0u	20m	100	2.5k			Si	A1jz
27	15L259	2 5k	150m	25	20	8 3m		175	3.0	150m	25	5.0u	200u	100	2.5k	3.7k	200u	Si	A1jz
28	15N25A9	2 5k	150m	25	20	8 3m		175	3 0	150m	25	5.0u	200u	100	2.5k	3.7k	200u	Si	M279b
29	15N25A	2 5k	15	25	20	8.3m		175	3 0	15	25	5.0u	.20m	100	2.5k			Si	M279b
30#	M25HZ	2 5k	150m	25A	2 5	10m		125A	2 0	150m	25A	1.0u	25u	100A	2.5k			SiΔ	DO7
31	MHV2 5	2 5k	15	25A$	5 0			125A	4 5	.15	25	1.0u			2 5k			Si	F8
32	SCE25A	2 5k	15	55A	6 0			175	6 0 Δ	10	25A	1 0uΔ	.02mΔ	100A	2 5k			Si	A1fh
33	20L25	2 5k	20	25	20	8 3m		175	3.0	20	25	5 0u	20m	100	2 5k			Si	A1jz
34	20L259	2 5k	200m	25	20	8 3m		175	3 0	200m	25	5.0u	200u	100	2 5k	3.7k	200u	Si	A1jz
35	30L259	2 5k	200m	25	40	8 3m		175	3 0	300m	25	5.0u	200u	100	2.5k	3.7k	200u	Si	A1jz
36	C2 5E5	2 5k	225	75	20	8 0m		150S	5 0	23		1.0u	.10m	100	2 5k			Si	A3s
37♦	1N2896	2 5k	250m	25A				150S	5 0	250m	25A	500n			2 5k	3 5k		Si	M122b
38♦	1N2897	2 5k	250m	25A				150S	5 0	250m	25A	500n			2 5k	3 5k		Si	A83ak
39	25L25	2 5k	.25	25	20	8 3m		175	3 0	25	25	5.0u	.20m	100	2 5k			Si	A1jz
40	25L259	2 5k	250m	25	20	8.3m		175	3 0	250m	25	5.0u	200u	100	2 5k	3 7k	200u	Si	A1jz
41	EH250	2 5k	.25	50A	25			150A	4 0 Δ	.25	25A	2 0uΔ	10mØ	100A	2 5k			Si	A3c
42	1N4256	2 5k	25	55A	6 3	8 0m		175	3.5	.10	55	1.0u	20m	125	2.5k			Si	A1eh
43	SC25	2 5k	25	55A	10	8.3m		175	3 5	10	25A	1.0u	20u	100A	2.5k			Si	A1ds
44	SCE25	2 5k	25	55A	10			175	3 5 Δ	10	25A	1.0uΔ	02mΔ	100A	2 5k			Si	A1sd
45	1N3871	2 5k	250m	60A	2 0 §			200A	4 4	500m	25	10n	5.0u	125	2 0k			Si	A1ds
46	C2 5E4	2.5k	25	75	25	8 0m		150S	4 0	25		1.0u	10m	100	2 5k			Si	A3s
47	MR993A	2 5k$	250m	75A	15 §			150J	1 7	250m	75A	10u	100u	75A	2 5k			Si	A1dt
48	30L25	2.5k	30	25	40	8 3m		175	3.0	30	25	5.0u	.20m	100	2.5k			Si	A1jz
49	525	2.5k	300m	25	20	8 0m		150	4 5	300m	25	2.0u			2.5k			SiΔ	A79b
50	DI525	2.5k	.30	25A$	20	8 0m		100A	4.5	20	25	2 0u			2.5k			Si	A79b
51	EG250	2.5k	35	50A	30			150A	3.0 Δ	.35	25A	2.0uΔ	.10mØ	100A	2 5k			SiΔ	A3c
52▼	350S25	2 5k	350m	55	30	8 3m	1 0	150A	3 0	350m	25	1.0u	20u	100	2.5k			Si	A1tp
53	C2 5E3	2.5k	35	75	30	8 0m		150S	3 0	35		1.0u	10m	100	2 5k			Si	A3s
54	40L25	2 5k	40	25	40	8.3m		175	3 0	40	25	5.0u	.20m	100	2.5k			Si	A1jz
55	40L259	2 5k	400m	25	40	8 3m		175	3.0	400m	25	5.0u	200u	100	2 5k	3 7k	200u	Si	A1jz
56	F25	2.5k	40	25	20	4 0m		140A	3.0	1 0	25	10u			2 5k				DO27
57	50L25	2 5k	.50	25	40	8 3m		175	3.0	.50	25	5.0u	.20m	100	2 5k			Si	A1jz
58	50L259	2.5k	500m	25	40	8.3m		175	3 0	500m	25	5.0u	200u	100	2.5k	3 7k	200u	Si	A1jz
59	SCBR25A	2.5k	.50	30C	5 0			150										Si	M45c*
60	60L25	2.5k	.60	25	40	8 3m		175	3 0	.60	25	5.0u	.20m	100	2 5k			Si	A1jz
61	60L259	2.5k	600m	25	40	8 3m		175	3.0	600m	25	5.0u	200u	100	2 5k	3.7k	200u	Si	A1jz
62	US25	2.5k	.60	25	20	8 3m		150A	5.0	40	25	2.0u	.10m	100	2 5k			Si	A1hp
63	1N4377	2.5k	75	85A	50			125A	30	75	85		.10m☑	85	2.5k			Si	M175
64	80L25	2 5k	80	25	60	8 3m		175	3.0	80	25	5.0u	.20m	100	2 5k			Si	A1jz
65	80L259	2 5k	800m	25	60	8.3m		175	3.0	800m	25	5.0u	200u	100	2 5k	3 7k	200u	Si	A1jz
66	100L25	2.5k	1 0	25	60	8 3m		175	3.0	1.0	25	5.0u	.20m	100	2.5k			Si	A1jz
67	100L259	2 5k	1 0	25	60	8 3m		175	3.0	1.0	25	5.0u	200u	100	2.5k	3.7k	200u	Si	A1jz
68	SCBR25	2 5k	1 0	30C	20			150										Si	M45b*
69	PS2350	2.5k	1 1	25A$				175A	4.0	20	25A	6.0u			2.5k			Si	M22
70♦	SCHS2500	2.5k	2 0	55	150			175A	5.0	1.0	25	10u	120u	100	2 5k			Si	A138w
71	1N5599	2.5k	2.1	100C	100		4 5kØ	150C	3.7	2.1	100C		750u	100C	2.5k			Si	S221
72	1N5602	2.5k	4 6	100C	200		14kØ	150C	5.0	4 6	100C		1.0m	100C	2 5k			Si	S293
73	UDE2 5	2.5k	6 0	75C				150A	5.0	3 0	25	10u						Si	S221
74	SCPD10	2 5k	11	55A	300			150A	5.0	3.0	25A	110u	200u	100A	2.5k			Si	M496
75	SCPN10	2.5k	11	55A	300			150A	5.0	3 0	25A	110u	200u	100A	2 5k			Si	M496
76	SCPP10	2.5k	11	55A	300			150A	5.0	3.0	25A	110u	200u	100A	2 5k			Si	M496
77	JAN1N3646	2.5k$	100	100	14	8.0m		175S	5.0	25	25	5 0u	.10m	100	2 5k			Si	Z55
78#	S25GR314	2 5k	300	100B	5 0k			150J	740mØ	300			25m		2 5k			SiΔ	M522
79#	S25HR314	2.5k	300	100B	5 0k			150J	740mØ	300			20m		2.5k			SiΔ	M523
80#	SR400A50	2.5k	400	89C	8.0k§	8 3m		150J	1.80	1.2k	25C		40m	150J	2.5k			SiΔ	S12d
81#	SR400C50	2.5k	400	98C	10k§	8 3m		150J	1.55	1.2k	25C		30m	150J	2 5k			SiΔ	S310
82	CH1613	2.5k	430	120C	5 2k	8 3m		180S	1.8	430	140C		20m	120C	2 5k	3 2k		Si	F81☑
83#	500EXD21	2.5k	500	150J	10k	10m		150J	1.65	1 5k	25J		30m	150J	2 5k			Si	M484a
84#	S25AR505	2.5k	510	100B	8 0k			150J	790mØ	550			20m		2.5k			SiΔ	M400a
85▼#	1S2254	2.5k	600	93C	10k§	8 3m		150J	1 85	1 9k	25C		30m	150J	2.5k			SiΔ	M566
86#	FD500E50	2.5k	600	93C	10k§	8.3m		150J	1.85	1 9k	25C		30m	150J	2.5k			SiΔ	M566
87#	S9K2603K5	2.5k	640	85C	8 0k	10m		175J	1.35	1 2k	25A	2.0m	50m	175C	2.5k			SiΔ	☑
88	A500LE	2.5k	800	95C	8 4k	8 3m		175J	1 36 Ø	1 0k	150C		30m	175J	2.5k			Si	M463
89▼#	1S2265	2 5k	800	101C	14k§	8 3m		150J	1.65	2.5k	25C		30m	150J	2 5k			SiΔ	M404
90#	FD1000A50	2.5k	800	101C	14k§	8.3m		150J	1.65	2.5k	25C		30m	150J	2.5k			SiΔ	M509
91#	V2059EJ	2 5k	800	103C	12k	20m		150J	1.6	2 5k	25	10m	25m	150J	2.5k				M484
92#	800EXD21	2 5k	800	150J	14k	10m		150J	1.5	2.5k	25J		30m	150J	2.5k			Si	M484b
93	10R26B	2 6k	.10	25	60			175	6.0	.10	25	5.0u	.50m	150	2 6k			Si	
94	75R26B	2 6k	75	25	60			175	6.0	75	25	5.0u	50m	150	2 6k			Si	
95	100R26B	2.6k	1.0	25	60			175	6 0	1 0	25	5.0u	50m	150	2 6k			Si	
96	150R26B	2 6k	1.5	25	60			175	6.0	1 5	25	5 0u	.50m	150	2 6k			Si	
97	200R26B	2.6k	2 0	25	60			175	6 0	2 0	25	5 0u	.50m	150	2 6k			Si	
98	250R26B	2 6k	2.5	25	250			175	6.0	2.5	25	10u	1.0m	150	2 6k			Si	
99	300R26B	2.6k	3 0	25	250			175	6.0	3.0	25	10u	1 0m	150	2 6k			Si	
100	350R26B	2.6k	3 5	25	250			175	6 0	3 5	25	10u	1 0m	150	2 6k			Si	
101	400R26B	2.6k	4 0	25	250			175	6 0	4.0	25	10u	1.0m	150	2.6k			Si	
102	450R26B	2.6k	4 5	25	250			175	6.0	4 5	25	10u	1.0m	150	2 6k			Si	
103	500R26B	2.6k	5.0	25	250			175	6.0	5 0	25	10u	1.0m	150	2 6k			Si	
104	550R26B	2.6k	5.5	25	250			175	6 0	5 5	25	10u	1.0m	150	2.6k			Si	
105	600R26B	2.6k	6.0	25	250			175	6.0	6.0	25	10u	1.0m	150	2 6k			Si	
106#	S26GR314	2.6k	300	100B	5 0k			150J	740mØ	300			25m		2 6k			SiΔ	M522
107#	S26HR314	2 6k	300	100B	5 0k			150J	740mØ	300			20m		2 6k			SiΔ	M523
108#	TA3026R	2.6k	300	100C	6 0k	10m			1.4	1 0k			15m	150C	2.6k				S316
109#	SSiN98145	2.6k	450	90C	8 5k	10m		150J	1.55	1.4k	25J		50m	150J				SiΔ*	M573
110#	S26AR505	2.6k	510	100B	8 0k			150J	790mØ	550			20m		2 6k			SiΔ	M400a

SYMBOLS AND CODES EXPLAINED IN INTERPRETER

5. RECTIFIERS

IN ORDER OF (1) PIV, (2) MAX AVG FWD CURRENT (3) TEMPERATURE, and (4) TYPE No.

LINE No.	4 TYPE No.	1 PIV (V)	MAX AVG FWD DC CURRENT 2 Io (A)	3 at TEMP (°C)	MAX RATINGS @ 25°C SURGE CUR. PEAK 1 Cy (A)	PULSE WIDTH (s)	DISS. (W)	MAX TEMP (°C)	MAXIMUM FORWARD VOLTAGE DROP Vf (V)	at If (A)	at TEMP (°C)	MAX. REVERSE CURRENT Ir @25°C & Vr (A)	Ir at T & Vr (A)	TEMP T (°C)	TEST VOLT Vr (V)	AVALANCHE RATINGS MAX V BKDN (V)	MIN SLOPE (A/V)	MAT.	DESCRIPTION DWG. No.
1▼#	SiD300P26K44	2 6k	600	95B	7 1k	10m		175J	1 33	1 0k	150J		20m	175J	2 6k			Si	S368
2#	S9K2703K5	2 6k	640	85C	8 0k	10m		175J	1 35	1 2k	25A	2 0m	50m	175C	2 6k			Si△	∅
3#	D400-2600	2 6k	700	65C	8 0k§	10m		150J	1 15	400	25J	10m		25J	2 6k			Si	M486b%
4▼#	Si300P26K44	2 6k	700	95B	7 1k	10m		175J	1 33	1 0k	150J		18m	175J	2 6k			Si	S366
5	A500LM	2.6k	800	95C	8 4k	8 3m		175J	1 36 ∅	1 0k	150C		30m	175J	2.6k			Si	M463
6▼#	YSD902P26K38	2 6k	1.5k	85C	22k	10m		150J	1 21	1 8k	150J		30m	150J	2 6k			Si	S370
7#	S27GR314	2 7k	300	100B	5 0k			150J	740m∅	300			25m		2 7k			Si△	M522
8#	S27HR314	2 7k	300	100B	5 0k			150J	740m∅	300			20m		2.7k			Si△	M523
9#	S27AR506	2 7k	560	100B	8 0k			150J	625m∅	560			20m		2 7k			Si△	M400a
10#	S9K2803K5	2 7k	640	85C	8 0k	10m		175J	1 35	1 2k	25A	2 0m	50m	175C	2.7k			Si△	∅
11	A500LS	2 7k	800	95C	8 4k	8 3m		175J	1 36 ∅	1.0k	150C		30m	175J	2.7k			Si	M463
12#	800YKD21	2 7k	800	150J	14k	10m		150J	1 5	2 5k	25J		30m	150J	2 7k			Si	M484b
13	HV28A	2 8k	50m	50A	17 §	10m		175A	5.0		25	6 0u						Si	A3t
14	MV28A	2 8k	50m	50A	16 §	10m		175A	5 0	50m	25A	6 0u			2 8k			Si	A3h
15	10R28B	2 8k	10	25	60			175	6 0	10	25	5 0u	50m	150	2.8k			Si	
16	HV28B	2 8k	15	50A	17 §	10m		175A	5 0		25	6 0u						Si	A3t
17	MV28B	2 8k	15	50A	16 §	10m		175A	5 0	15	25A	6 0u			2 8k			Si	A3h
18	1N2632	2.8k	200m	70$	5 0			100A	6 0 §	200m	100	350u∅			2.8k			Si	M84a
19	CP121	2 8k	20	75					4 0		25								M84ak
20♦	1N2898	2 8k	250m	25A				150S	8 0	250m	25A	500n			2.8k	5 6k		Si	M122c
21♦	1N2899	2 8k	250m	25A				150S	8 0	250m	25A	500n			2 8k	5.6k		Si	A83ax
22#	AV/5R4GY	2 8k	25	70A	40	100m		70A	2 5	25	25A	10u	10m	140J	1 4k	3 6k	100u	Si△	
23	1N1113	2 8k	33	100	20	4 0m		150	11			2 0m			2 8k			Si	F22f
24	HV28C	2 8k	35	50A	17 §	10m		175A	5 0		25	6 0u						Si	A3t
25	MV28C	2 8k	35	50A	16 §	10m		175A	5 0	35	25A	6 0u			2.8k			Si	A3h
26#	0955	2 8k*	50	50A$	30			150J	6 0 △	50	25A	1 0u			2.5k			Si*	A1py △
27	1N1239	2 8k	50	100A$				100A	12	50	25		2 0m	25	2.8k			Si	M84n
28	DI5R4	2 8k	50	100	50			100				10u			2 8k				M197a
29	S5162	2 8k†	50	100A$				100A	12	50	25A		2 0m	25A	2 8k			Si	M197
30	75R28B	2 8k	75	25	60			175	6 0	75	25	5 0u	50m	150	2 8k			Si	
31	100R28B	2 8k	1 0	25	60			175	6 0	1 0	25	5.0u	50m	150	2 8k			Si	
32	150R28B	2.8k	1 5	25	60			175	6 0	1 5	25	5 0u	50m	150	2 8k			Si	
33	200R28B	2 8k	2 0	25	60			175	6 0	2 0	25	5 0u	50m	150	2.8k			Si	
34	250R28B	2 8k	2 5	25	250			175	6 0	2 5	25	10u	1 0m	150	2 8k			Si	
35	300R28B	2 8k	3 0	25	250			175	6 0	3 0	25	10u	1.0m	150	2 8k			Si	
36	350R28B	2 8k	3.5	25	250			175	6 0	3 5	25	10u	1 0m	150	2 8k			Si	
37	400R28B	2 8k	4.0	25	250			175	6 0	4 0	25	10u	1 0m	150	2.8k			Si	
38	450R28B	2 8k	4 5	25	250			175	6.0	4 5	25	10u	1 0m	150	2.8k			Si	
39	500R28B	2 8k	5 0	25	250			175	6 0	5 0	25	10u	1 0m	150	2.8k			Si	
40	550R28B	2 8k	5 5	25	250			175	6 0	5 5	25	10u	1 0m	150	2.8k			Si	
41	600R28B	2 8k	6 0	25	250			175	6 0	6 0	25	10u	1 0m	150	2.8k			Si	
42#	S28GR314	2.8k	300	100B	5 0k			150J	740m∅	300			25m		2.8k			Si△	M522
43#	S28HR314	2 8k	300	100B	5 0k			150J	740m∅	300			20m		2.8k			Si△	M523
44#	TA3028R	2 8k	300	100C	5 0k	10m			1 4	1.0k			15m	150C	2 8k				S316
45#	SSiN98155	2 8k	450	90C	8 5k	10m		150J	1 55	1 4k	25J		50m	150J				Si△*	M573
46#	S28AR506	2.8k	560	100B	8 0k			150J	625m∅	560			20m		2 8k			Si△	M400a
47▼#	SiD300P28K44	2 8k	600	95B	7 1k	10m		175J	1 33	1 0k	150J		19m	175J	2.8k			Si	S368
48#	S9K2903K5	2 8k	640	85C	8 0k	10m		175J	1 35	1 2k	25A	2.0m	50m	175C	2.8k			Si△	∅
49▼#	Si300P28K44	2 8k	700	95B	7 1k	10m		175J	1 33	1 0k	150J		17m	175J	2 8k			Si	S366
50	A500LN	2 8k	800	95C	8 4k	8 3m		175J	1 36 ∅	1 0k	150C		30m	175J	2.8k			Si	M463
51▼#	1S2266	2 8k	800	101C	14k§	8 3m		150J	1 65	2 5k	25C		30m	150J	2 8k			Si△	M404
52#	FD1000A56	2 8k	800	101C	14k§	8 3m		150J	1 65	2 5k	25C		30m	150J	2 8k			Si△	M509
53▼#	YSD902P28K38	2.8k	1 5k	85C	22k	10m		150J	1 21	1 8k	150J		30m	150J	2 8k			Si	S370
54#	S29GR314	2 9k	300	100B	5 0k			150J	740m∅	300			25m		2 9k			Si△	M522
55#	S29HR314	2 9k	300	100B	5 0k			150J	740m∅	300			20m		2 9k			Si△	M523
56#	S29AR506	2 9k	560	100B	8 0k			150J	625m∅	560			20m		2 9k			Si△	M400a
57#	S9K3003K5	2 9k	640	85C	8 0k	10m		175J	1 35	1 2k	25A	2 0m	50m	175C	2 9k			Si△	∅
58	A500LT	2 9k	800	95C	8 4k	8 3m		175J	1 36 ∅	1 0k	150C		30m	175J	2 9k			Si	M463
59▼	5K30	3 0k	5 0m	25	1 0	8 0m		150A	4 0	5 0m	25	1 0u	10u	100	3.0k			Si	DO7
60	MH404	3.0k	005	25					6 0	01	25	02u	01m	100	3 0k			Si	A1at
61	MC159	3 0k	01	25	1 0	8 0m			4 0	01	25	1 0u			3 0k			Si	A1db
62	MH405	3 0k	01	25					3 2	.01	25	50u	02m	100	3.0k			Si	A1at
63▼	X10-3	3 0k	10m	25	3.0	8.0m		100A	10	10m	25	1.0u	40u	100	3.0k			Si	A1fc
64▼	10S30	3 0k	10m	55	1 0	8.3m	750m	150A	5 0	10m	25	1 0u	10u	100	3 0k			Si	A1df
65	SCM30	3 0k	10m	55A	2 0	8.3m		150A	15	10m	25A	100n△	2 0u△	100A	3 0k			Si	A1fh
66	2L30	3 0k	02	25	10	8 3m		175	3 0	02	25	5.0u	20m	100	3.0k			Si	A1jz
67	2L309	3 0k	02	25	10	8.3m		175	3 0	02	25	5.0u	20m	100	3 0k	4 5k	200u	Si	A1jz
68	MC158	3 0k	02	25	2 0	8.0m			4 0	.02	25	1 0u			3 0k			Si	A1db
69▼	25K30	3 0k	25m	25	1 5	8 0m		150A	4 0	25m	25	1.0u	10u	100	3.0k			Si	DO7
70▼	X25-3	3 0k	25m	25	3 0	8 0m		100A	10	25m	25	1 0u	40u	100	3 0k			Si	A1fc
71	VA30	3 0k	25m	40A	3 0	8 3m		150A	6 0	25m	25	50n	5 0u	100	3 0k			Si△	A1m
72	HV30G	3 0k	30m	25	20	8.0m	30		10	10m	25	2 0u	10m	100	3 0k			Si	A1fs
73	MC157	3 0k	04	25	3 0	8.0m			3 0	04	25	1.0u			3 0k			Si	A1db
74	MC1031	3 0k	04	25					4 0	04	25	1 0u							A1cv
75	MC1031A	3 0k	04	25					4 0	04	25	02u							A1cv
76	MC1032	3 0k	04	25					6 0	.04	25	1 0u							A1gr
77	MC1032A	3 0k	04	25					6 0	.04	25	02u							A1gr
78	5L30	3 0k	50m	25	10	8 3m		175	3 0	50m	25	5 0u	200u	100	3.0k			Si	A1jz
79	5L309	3.0k	05	25	10	8.3m		175	3 0	05	25	5 0u	.20m	100	3 0k	4 5k	200u	Si	A1jz
80▼	50K30	3 0k	50m	25	2 0	8 0m		150A	4.0	50m	25	1.0u	10u	100	3 0k			Si	DO7
81	MC031	3.0k	.05	25A$				150A	3 0	.10	25A	1 0u			3 0k			Si	M54a
82	MC031A	3 0k	05	25A$				150A	3 0	10	25A	.02u			3 0k			Si	M54a
83	MC032	3 0k	.05	25A$				150A	6 0	10	25A	1.0u			3 0k			Si	M54c
84	MC032A	3 0k	05	25A$				150A	6.0	10	25A	02u			3 0k			Si	M54c
85	PS2423	3 0k	05	25A$					8 0	5m	25A	10u			3.0k			Si	A1gb
86▼	X50-3	3 0k	50m	25	3 0	8.0m		100A	10	50m	25	1 0u	40u	100	3 0k			Si	A1fc
87	VB30	3 0k	50m	40A	3.0	8.3m		150A	10	50m	25	50n	5.0u	100	3.0k			Si△	A1fc
88▼	50S30	3 0k	50m	55	2 0	8 3m	750m	150A	5 0	50m	25	1 0u	10u	100	3 0k			Si	A1df
89	1N1733A	3 0k	50m	175$	9.0	8 0m		200A	6 0	400m	25	1.0u	12u	150	3.0k			Si	A1gd
90	HV30E3	3 0k	70m	25	1 0	8 0m	25	125A	3 0	10m	25	20n	3 0u	100	3 0k			Si	A83f
91	HV30P3	3 0k	70m	25	1.0	8 0m	250m	125A	3 0	10m	25	20n	3.0u	100	3 0k			Si	A94h
92	7715-3	3 0k	.075	25A	1 5	8 3m		125A	6 0	75m	25	1.0u	10m	125	3.0k			Si△	A1jb
93	1N2378	3 0k	75m	100A	12	8 3m		150A	9 0	75m	100A		100m	100A	600			Si	A1hv
94#	M30G	3.0k	08	25				125A	6 4	08			10m	55	3 0k			Si	A1he
95	1N3286	3 0k	10	25A	2 5			150A	2 5	10	25A	1.0u	.01m	100A	3 0k			Si△	DO7
96	10L30	3 0k	10	25	20	8.3m		175	3 0	.10	25	5.0u	.20m	100	3.0k			Si	A1jz
97	10L309	3 0k	10	25	20	8 3m		175	3.0	10	25	5 0u	20m	100	3.0k	4 5k	200u	Si	A1jz
98	10R30B	3 0k	10	25	60			175	6 0	10	25	5 0u	50m	150	3.0k			Si	
99▼	100K30	3.0k	100m	25	2 5	8 0m		150A	3 0	100m	25	1 0u	10u	100	3 0k			Si	DO7
100#	HSC3	3.0k	10	25A$				150A	6 0	10	25A	5.0u			3 0k			Si	A1jg
101	HV30E2	3 0k	10	25	1 0	8 0m	25	125A	2 0	10m	25	20n	3 0u	100	3 0k			Si	A83e
102	HV30P2	3 0k	100m	25	1 0	8 0m	250m	125A	2 0	10m	25	20n	3.0u	100	3 0k			Si	A94h
103#	ZHS104	3.0k	100m	25A			300m	150A	5 0	50m	25A	50n	5 0u	100A	3 0k			Si△	DO7
104#	ZHS105	3 0k	10	25A			30	150A	5 0	05	25A	1.0u	.02m	100A	3.0k			Si△	DO7
105#	ZHS106	3.0k	10	25A			30	150A	5 0	05	25A	.10u	01m	100A	3 0k			Si△	DO7
106	EZ300	3.0k	10	50A	10			125A	9 0	10	25A	2 0u	100u	100A	3.0k			Si	A3c
107▼	100S30	3.0k	100m	55	3.0	8 3m	750m	150A	5 0	100m	25	1 0u	10u	100	3 0k			Si	A1df
108	1N1733	3 0k	15	25A$	2 5	8 0m		150A	12	10	25A	10u	.10m	100A	3.0k			Si	A1jg
109	15L30	3.0k	15	25	20	8 3m		175	3.0	15	25	5 0u	.20m	100	3 0k			Si	A1jz
110	15L309	3.0k	15	25	20	8 3m		175	3.0	15	25	5.0u	.20m	100	3.0k	4.5k	200u	Si	A1jz

SYMBOLS AND CODES EXPLAINED IN INTERPRETER

5. RECTIFIERS

IN ORDER OF (1) PIV, (2) MAX AVG FWD CURRENT (3) TEMPERATURE, and (4) TYPE No.

LINE No	TYPE No. [4]	PIV [1] (V)	MAX AVG FWD DC CURRENT Io [2] (A)	at TEMP [3] (°C)	MAX RATINGS @ 25°C SURGE CUR. PEAK 1 Cy (A)	PULSE WIDTH (s)	DISS. (W)	MAX. TEMP (°C)	MAXIMUM FORWARD VOLTAGE DROP Vf (V)	at If (A)	at TEMP (°C)	MAX. REVERSE CURRENT Ir @25°C & Vr (A)	Ir at T & Vr (A)	TEMP T (°C)	TEST VOLT Vr (V)	AVALANCHE RATINGS MAX V BKDN. (V)	MIN SLOPE (A/V)	MAT.	DESCRIPTION DWG. No.
1	7701-3A	3.0k	.15	25	3 0	8.3m		125A	6 0	.05	25	1 0u	.10m	125	3.0k			Si△	A1jb
2#	M30HZ	3 0k	150m	25A	2 5	10m		125A	2 0	150m	25A	1 0u	25u	100A	3.0k			Si△	DO7
3	MHV3	3.0k	15	25A$	5.0			125A	4.5	.15	25	1.0u			3 0k			Si	F8
4	PS1143	3 0k†	.15	25A$	2 5 §	8.0m		175A	13.5	.10	25A							Si	A48
5	SE1733	3.0k	.15	50A	3.0 §	10m		150A	10	.20	25	5.0u	75m	100	3.0k			Si	A1jq
6▼	HG3	3.0k	150m	55A	5.0	8.3		150A	4.0	100m	25A	5.0u	25	100A	3.0k			Si	A94j
7	SCE30A	3.0k	.15	55A	6 0			175	6.0 △	.10	25A	1.0u△	.02m△	100A	3.0k			Si	A1fh
8	20L30	3.0k	20	25	20	8 3m		175	3 0	.20	25	5.0u	.20m	100	3.0k			Si	A1jz
9	20L309	3.0k	.20	25	20	8.3m		175	3.0	20	25	5.0u	.20m	100	3.0k	4.5k	200u	Si	A1jz
10#	ME30	3 0k	.20	25A	1 5	10m		100A	6.0	.2 †	25	01u			3 0k			Si△	A1hw
11	SLA03	3 0k	200m	25				150	5.0	1 0		6.0u	75u	100	3.0k			Si	A1dj
12	HVC300	3.0k	20	55A	6.0			150	6 0	.20	25	10u			3.0k			Si	M291b
13	C3 0E6	3.0k	20	75	15	8.0m		150S	6 0	.20		1 0u	.10m	100	3 0k			Si	A3s
14	CP124	3.0k	20	100					4.0		25								M84an
15	C3.0E5	3.0k	.225	75	20	8.0m		150S	5.0	.23		1.0u	10m	100	3.0k			Si	A3s
16♦	1N2900	3 0k	250m	25A				150S	6.0	250m	25A	500n			3.0k	4.2k		Si	M122b
17♦	1N2901	3 0k	250m	25A				150S	6.0	250m	25A	500n			3 0k	4.2k		Si	A83ak
18	25L30	3.0k	.25	25	20	8 3m		175	3.0	.25	25	5.0u	.20m	100	3.0k			Si	A1jz
19	25L309	3.0k	.25	25	20	8.3m		175	3 0	.25	25	5 0u	.20m	100	3.0k	4 5k	200u	Si	A1jz
20#	M30K	3.0k	250m	25A	2 0	10m		150A	4 0	250m†	25A	1.0u	50u	100A	3.0k			Si△	A83k
21	DICR3	3.0k	250m	50	15	8.3m		150S	5 0	250m	25	2.0u			3.0k			Si	A1dm
22	EH300	3.0k	25	50A	25			150A	4.0 △	25	25A	2.0u△	.10mØ	100A	3.0k			Si△	A3c
23	1N4257	3 0k	.25	55A	6.3	8.0m		175	3 5	10	55	1 0u	20m	125	3.0k			Si	A1eh
24▼	250S30	3.0k	250m	55	25	8.3m	1 0	150A	4.0	250m	25	1.0u	20u	100	3.0k			Si	A1tp
25	SC30	3.0k	25	55A	10	8.3m		175	3 5	.10	25A	1 0u	20u	100A	3.0k			Si	A1ds
26	SCE30	3.0k	25	55A	10			175	3 5 △	.10	25A	1.0u△	.02m△	100A	3.0k			Si	A1sd
27	SLA03HF	3.0k	.25	60	20	8.3m		150	8 0	.30	50	5.0u	.20m	100	3.0k			Si	A134d
28	BH300	3.0k	250m	75A	20	8 3m		150A	4 0 △	250m	25A	10u△			3.0k			Si	DO27
29	C3 0E4	3.0k	.25	75	25	8 0m		150S	4.0	.25		1.0u	.10m	100	3.0k			Si	A3s
30	MR994A	3.0k$	250m	75A	15 §			150J	1.7	250m	75A	10u	100u	75A	3.0k			Si	A1dt
31	30L30	3 0k	.30	25	40	8.3m		175	3 0	30	25	5 0u	.20m	100	3.0k			Si	A1jz
32	30L309	3 0k	.30	25	40	8 3m		175	3.0	30	25	5 0u	20m	100	3.0k	4 5k	200u	Si	A1jz
33	530	3.0k	300m	25	20	8.0m		150	4.5	300m	25	2.0u			3.0k			Si△	A79b
34	DI530	3.0k	30	25A$	20	8 0m		100A	4 5	20	25	2 0u			3.0k			Si	A79b
35	A1423PC4AC1	3.0k	300m	50A				150A	7 2	100m	25	5.0u	100u	150A	3.0k			Si	A83x
36	CR203	3 0k	.30	60A	9 0			125A	3.0 Ø	.30	60A	10u△	.10m☑	100	3.0k			Si△	A83bxØ
37	EG300	3.0k	35	50A	30			150A	3.0 △	35	25A	2.0u△	.10mØ	100A	3.0k			Si△	A3c
38▼	350S30	3.0k	350m	55	30	8.3m	1.0	150A	3 0	350m	25	1.0u	20u	100	3.0k			Si	A1tp
39	C3.0E3	3 0k	.35	75	30	8.0m		150S	3 0	.35		1 0u	.10m	100	3.0k			Si	A3s
40	1N3764	3.0k	40	25A					6.5				.10m	100	1.0k			Si△	A83aq
41	40L30	3.0k	.40	25	40	8.3m		175	3.0	.40	25	5 0u	.20m	100	3.0k			Si	A1jz
42	40L309	3.0k	40	25	40	8 3m		175	3.0	.40	25	5 0u	.20m	100	3.0k	4.5k	200u	Si	A1jz
43	PS1443	3 0k	40	25A$	10	8.0m	4 0	175A	8 0	20	25A	1 0u	.05m	100A	3.0k			Si	F13b
44	SLDHV3	3.0k	40	25A	22			175A	6.0		25							Si	M239b
45	DER3	3 0k	400m	50	40	8.3m	2.0	150S	5.0	400m	25	2.0u	20u	125	3.0k			Si	A1dm
46	DI530LS	3.0k	.40	50A	40	8 0m		125	4.2	.40	25A	5.0u			3.0k			Si	C42e
47	CP123	3.0k	40	100					4.0		25								M84am
48	50L30	3.0k	.50	25	40	8.3m		175	3.0	50	25	5.0u	.20m	100	3.0k			Si	A1jz
49	50L309	3.0k	.50	25	40	8 3m		175	3 0	.50	25	5 0u	.20m	100	3.0k	4 5k	200u	Si	A1jz
50	B223-30	3.0k	50	25	60			175A	1.5		150	5 0u	.50m	150A				Si	A1rx
51	US30	3.0k	50	25	20	8.3m		150A	6.0	40	25	2.0u	.10m	100	3.0k			Si	A1hp
52	SCBR30A	3.0k	50	30C	5 0			150										Si	M45c*
53	A1423MH5AB1	3.0k	580m	50A				150A	4.5	100m	25	5.0u	100u	150A	3.0k			Si	M212e
54	60L30	3.0k	60	25	40	8 3m		175	3 0	60	25	5.0u	.20m	100	3.0k			Si	A1jz
55	60L309	3 0k	60	25	40	8 3m		175	3.0	.60	25	5.0u	.20m	100	3.0k	4 5k	200u	Si	A1jz
56	830C	3.0k	600m	25	50	8 0m		150	4.0	600m	25	5 0u	25u	100	3.0k			Si△	M519
57	DI830C	3.0k	600m	40A	50	8 3m		150J	4.0	600m	25	5.0u	25u	100	3 0k			Si	C42l
58	CR103	3.0k	.725	60A	15			125A	3 0 Ø	73	60A	600u△	30m☑	60A	3.0k			Si△	M100bØ
59	75R30B	3 0k	75	25	60			175	6.0	.75	25	5 0u	.50m	150	3 0k			Si	
60	SLA03HC	3.0k	750m	75	50	8.3m		150A	6 0	1.0	25	5.0u	100u	100	3.0k			Si	A134d
61	1N4498	3 0k	75	85A	35 §			125A	5 0	.75	85A		.20m	125A	3 0k			Si	M239
62	A1423MC5AB1	3 0k	780m	50A				150A	4.5	100m	25	5 0u	100u	150A	3.0k			Si	M205n
63	80L30	3.0k	.80	25	60	8.3m		175	3.0	80	25	5.0u	.20m	100	3.0k			Si	A1jz
64	80L309	3 0k	.80	25	60	8.3m		175	3.0	.80	25	5.0u	20m	100	3 0k	4.5k	200u	Si	A1jz
65	PS2351	3.0k	90	25A$				175A	5.0	.20	25A	6 0u			3.0k			Si	M22
66	100L30	3 0k	1.0	25	60	8.3m		175	3 0	1 0	25	5.0u	.20m	100	3 0k			Si	A1jz
67	100L309	3.0k	1.0	25	60	8 3m		175	3 0	1 0	25	5.0u	.20m	100	3.0k	4.5k	200u	Si	A1jz
68	100R30B	3 0k	1.0	25	60			175	6.0	1 0	25	5 0u	.50m	150	3.0k			Si	
69	SCBR30	3 0k	1 0	30C	20			150										Si	M45b*
70	SLD3	3.0k	1 1	30A	50			125A	6.5	1 1	25A	10u			3 0k			Si△	M239b
71	150R30B	3 0k	1 5	25	60			175	6.0	1 5	25	5 0u	50m	150	3.0k			Si	
72	BR830A†	3 0k	1 50	25	50	8.0m		150	4 00	.75	25	5.0u			3.0k			Si△	M540
73	2ASLD3	3 0k	2 0	25A	200			175A	5 0		25							Si	M239b
74	200R30B	3 0k	2.0	25	60			175	6.0	2.0	25	5.0u	50m	150	3.0k			Si	
75	VC30	3 0k†	2 0	40C	50			125A	6 0	10	25	1.0u	1.0m	125A	3.0k			Si△	M430
76	250R30B	3.0k	2 5	25	250			175	6 0	2 5	25	10u	1.0m	150	3.0k			Si	
77	300R30B	3.0k	3.0	25	250			175	6 0	3.0	25	10u	1 0m	150	3.0k			Si	
78	KHP3	3 0k	3 0	25A	300			175A	4 0		25A	5.0u			3.0k			Si△	M239u
79	SODSLD3	3 0k	3 0	30A	290			140A	5.0	3.0	25A	25u			3 0k			Si△	M239u
80	1N4539	3 0k*	3.0	100C	15 §	8 3m		175C	1.85	3.0	100C		2.0m	175C	2 5k			Si	DO4
81	350R30B	3 0k	3 5	25	250			175	6 0	3 5	25	10u	1 0m	150	3.0k			Si	
82	400R30B	3 0k	4 0	25	250			175	6 0	4.0	25	10u	1.0m	150	3.0k			Si	
83	450R30B	3 0k	4 5	25	250			175	6 0	4.5	25	10u	1.0m	150	3 0k			Si	
84	500R30B	3 0k	5 0	25	250			175	6 0	5 0	25	10u	1.0m	150	3 0k			Si	
85	550R30B	3 0k	5.5	25	250			175	6.0	5 5	25	10u	1.0m	150	3 0k			Si	
86	SCPH6	3 0k	5.5	55A	300			150A	6.0	3.0	25A	110u	200u	100A	3.0k			Si	M496
87	600R30B	3.0k	6 0	25	250			175	6 0	6 0	25	10u	1.0m	150	3.0k			Si	
88#	6FXF11	3 0k	6.0	147C	150	10m	2 0kØ	175J	1 3	20	175J		4.0m	175J	3 0k	4.2k		Si	S339
89	SCPD12	3.0k	11	55A	300			150A	6.0	3.0	25A	110u	200u	100A	3.0k			Si	M496
90	SCPN12	3 0k	11	55A	300			150A	6 0	3.0	25A	110u	200u	100A	3.0k			Si	M496
91	SCPP12	3.0k	11	55A	300			150A	6.0	3.0	25A	110u	200u	100A	3.0k			Si	M496
92#	12FXF11	3 0k	12	140C	240	10m	3 8kØ	175J	1.4	40	175J		4 0m	175J	3.0k	4 2k		Si	S339
93#	25FXF11	3 0k	25	140C	500	10m	8 0kØ	175J	1 7	80	175J		7.0m	175J	3 0k	4 2k		Si	S339a
94	JAN1N3647	3 0k$	100	100	14	8.0m		175S	5.0	.25	25	5 0u	10m	100	3.0k			Si	Z55
95#	S30GR314	3 0k	300	100B	5 0k			150J	740mØ	300			25m		3 0k			Si△	M522
96#	S30HR314	3.0k	300	100B	5.0k			150J	740mØ	300			20m		3.0k			Si△	M523
97#	TA3030R	3.0k	300	100C	5 0k	10m			1 4	1 0k			15m	150C	3.0k				S316
98#	300FXD11	3 0k	300	101C	6 5k	10m		150J	1 54	1.0k	150J		20m	150J	3.0k			Si	S338a
99	CH1518	3.0k	300	120C	3 5k	8.3m		200S	1 8	300	140C		10m	120C	3.0k	3 5k		Si	DO9☑
100#	SR400A60	3 0k	400	89C	8 0k§	8 3m		150J	1 80	1 2k	25C		40m	150J	3 0k			Si△	S12d
101#	SR400C60	3.0k	400	98C	10k§	8.3m		150J	1.55	1 2k	25C		30m	150J	3.0k			Si△	S310
102	CH1614	3.0k	410	120C	5.2k	8.3m		180S	1.8	410	140C		20m	120C	3.0k	3 8k		Si	F81☑
103#	500FXD21	3 0k	500	150J	10k	10m		150J	1 65	1.5k	25J		30m	150J	3.0k			Si	M484a
104#	S30AR506	3 0k	560	100B	8 0k			150J	625mØ	560			20m		3.0k			Si△	M400a
105▼#	1S2255	3 0k	600	93C	10k§	8 3m		150J	1 85	1 9k	25C		30m	150J	3.0k			Si△	M566
106#	FD500E60	3.0k	600	93C	10k§	8 3m		150J	1 85	1 9k	25C		30m	150J	3.0k			Si△	M566
107▼#	SiD300P30K44	3 0k	600	95B	7 1k	10m		175J	1 33	1 0k	150J		19m	175J	3.0k			Si	S368
108▼#	Si300P30K44	3 0k	700	95B	7 1k	10m		175J	1 33	1 0k	150J		17m	175J	3 0k			Si	S366
109	A500LP	3.0k	800	95C	8 4k	8 3m		175J	1 36 Ø	1 0k	150C		30m	175J	3.0k			Si	M463
110#	800FXD21	3.0k	800	100C	12k	10m		150J	1.55	2 5k	150J		30m	150J	3.0k			Si	

SYMBOLS AND CODES EXPLAINED IN INTERPRETER

5. RECTIFIERS

IN ORDER OF (1) PIV, (2) MAX AVG FWD CURRENT (3) TEMPERATURE, and (4) TYPE No.

LINE No.	4 TYPE No.	1 PIV (V)	MAX AVG FWD DC CURRENT 2 Io (A)	3 at TEMP (°C)	MAX RATINGS @ 25°C SURGE CUR. PEAK 1 Cy (A)	PULSE WIDTH (s)	DISS. (W)	MAX. TEMP (°C)	MAXIMUM FORWARD VOLTAGE DROP Vf (V)	at If (A)	at TEMP (°C)	MAX. REVERSE CURRENT Ir @25°C & Vr (A)	Ir at T & Vr (A)	TEMP T (°C)	TEST VOLT Vr (V)	AVALANCHE RATINGS MAX V BKDN. (V)	MIN SLOPE (A/V)	MAT.	DESCRIPTION DWG. No.
1#	V2059GZ	3.0k	800	103C	12k	20m		150J	1.6	2.5k	25	10m	25m	150J	3.0k				M484
2▼#	YSD903P30K50	3.0k	1.35k	85C	19k	10m		150J	1 45	1 8k	150J		30m	150J	3.0k			Si	S370
3♦	1N2902	3 1k	250m	25A				150S	9 0	250m	25A	500n			3.1k	6.3k		Si	M122c
4♦	1N2903	3 1k	250m	25A				150S	9.0	250m	25A	500n			3.1k	6.3k		Si	A83ax
5#	S31AR506	3.1k	560	100B	8.0k			150J	625mØ	560			20m		3 1k			Si△	M400a
6	HV32A	3.2k	.05	50A	17 §	10m		175A	5 0		25	6.0u						Si	A3t
7	MV32A	3.2k	.05	50A	16 §	10m		175A	5.0	.05	25A	6.0u			3.2k			Si	A3h
8	10R32B	3.2k	.10	25	60			175	6.0	10	25	5.0u	50m	150	3.2k			Si	
9	HV32B	3.2k	15	50A	17 §	10m		175A	5.0		25	6.0u						Si	A3t
10	MV32B	3.2k	.15	50A	16 §	10m		175A	5 0	15	25A	6.0u			3.2k			Si	A3h
11	HV32C	3.2k	.30	50A	17 §	10m		175A	5 0		25	6.0u						Si	A3t
12	MV32C	3 2k	.30	50A	16 §	10m		175A	5.0	.30	25A	6.0u			3.2k			Si	A3h
13	75R32B	3.2k	.75	25	60			175	6 0	.75	25	5.0u	50m	150	3.2k			Si	
14	100R32B	3 2k	1.0	25	60			175	6.0	1.0	25	5.0u	50m	150	3.2k			Si	
15	1N2666	3 2k	1.5	25A	15	8.3m		165A	10.4	1 5	25A	800u			3.2k			Si	M126e
16	150R32B	3.2k	1.5	25	60			175	6 0	1.5	25	5.0u	.50m	150	3.2k			Si	
17	200R32B	3 2k	2.0	25	60			175	6.0	2.0	25	5.0u	50m	150	3 2k			Si	
18#	P32H	3 2k	2.0	55A	230	10m		125A	5 5	2.0 †	25	100u			3 2k			Si△	M267
19	250R32B	3.2k	2.5	25	250			175	6 0	2.5	25	10u	1.0m	150	3.2k			Si	
20	300R32B	3.2k	3 0	25	250			175	6.0	3.0	25	10u	1.0m	150	3.2k			Si	
21	350R32B	3.2k	3.5	25	250			175	6.0	3.5	25	10u	1.0m	150	3.2k			Si	
22	400R32B	3 2k	4 0	25	250			175	6 0	4 0	25	10u	1 0m	150	3.2k			Si	
23	450R32B	3 2k	4.5	25	250			175	6 0	4.5	25	10u	1.0m	150	3.2k			Si	
24	500R32B	3.2k	5.0	25	250			175	6.0	5.0	25	10u	1 0m	150	3.2k			Si	
25	550R32B	3.2k	5 5	25	250			175	6.0	5.5	25	10u	1.0m	150	3.2k			Si	
26	600R32B	3.2k	6.0	25	250			175	6.0	6.0	25	10u	1 0m	150	3.2k			Si	
27#	S32AR506	3.2k	560	100B	8.0k			150J	625mØ	560			20m		3 2k			Si△	M400a
28▼#	YSD903P32K50	3 2k	1.35k	85C	19k	10m		150J	1.45	1.8k	150J		30m	150J	3.2k			Si	S370
29#	0956	3.3k*	500m	50A$	30			150J	7 2 △	500m	25A	1.0u			3.0k			Si*	A1qp △
30#	S33AR506	3.3k	560	100B	8.0k			150J	625mØ	560			20m		3.3k			Si△	M400a
31	10R34B	3 4k	10	25	60			175	8 0	10	25	5.0u	.50m	150	3.4k			Si	
32	75R34B	3 4k	75	25	60			175	8.0	.75	25	5 0u	.50m	150	3.4k			Si	
33	100R34B	3 4k	1 0	25	60			175	8.0	1.0	25	5.0u	.50m	150	3.4k			Si	
34	150R34B	3 4k	1.5	25	60			175	8 0	1.5	25	5 0u	.50m	150	3.4k			Si	
35	200R34B	3.4k	2.0	25	60			175	8.0	2 0	25	5.0u	.50m	150	3 4k			Si	
36	250R34B	3 4k	2.5	25	250			175	8 0	2.5	25	10u	1.0m	150	3.4k			Si	
37	300R34B	3.4k	3.0	25	250			175	8.0	3.0	25	10u	1.0m	150	3.4k			Si	
38	350R34B	3.4k	3.5	25	250			175	8.0	3.5	25	10u	1 0m	150	3.4k			Si	
39	400R34B	3.4k	4.0	25	250			175	8.0	4.0	25	10u	1 0m	150	3.4k			Si	
40	450R34B	3.4k	4.5	25	250			175	8 0	4.5	25	10u	1.0m	150	3.4k			Si	
41	500R34B	3 4k	5 0	25	250			175	8 0	5.0	25	10u	1 0m	150	3.4k			Si	
42	550R34B	3 4k	5.5	25	250			175	8.0	5.5	25	10u	1.0m	150	3 4k			Si	
43	600R34B	3 4k	6.0	25	250			175	8 0	6 0	25	10u	1.0m	150	3 4k			Si	
44#	S34AR506	3 4k	560	100B	8.0k			150J	625mØ	560			20m		3.4k			Si△	M400a
45▼#	YSD903P34K50	3 4k	1 35k	85C	19k	10m		150J	1.45	1.8k	150J		30m	150J	3.4k			Si	S370
46	MH406	3 5k	.005	25					6.0	.01	25	.02u	.01m	100	3 5k			Si	A1at
47	MH407	3.5k	.01	25					4 5	.01	25	.50u	.02m	100	3.5k			Si	A1at
48	HW3G	3.5k	.01	150					8.0	.01	25	2.0u			3.0k			Si	A1gk
49	2L35	3.5k	02	25	10	8.3m		175	4 0	.02	25	5.0u	20m	100	3 5k			Si	A1ke
50	2L359	3.5k	20m	25	10	8.3m		175	4.0	20m	25	5 0u	200u	100	3.5k	5.2k	200u	Si	A1ke
51	VA35	3 5k	25m	40A	3 0	8.3m		150A	6.0	25m	25	50n	5 0u	100	3 5k			Si△	A1m
52	5L35	3.5k	05	25	10	8 3m		175	4 0	.05	25	5.0u	20m	100	3 5k			Si	A1ke
53	5L359	3 5k	50m	25	10	8.3m		175	4.0	50m	25	5.0u	200u	100	3.5k	5 2k	200u	Si	A1ke
54	10L35	3 5k	.10	25	20	8 3m		175	4.0	.10	25	5.0u	.20m	100	3 5k			Si	A1ke
55	10L359	3 5k	100m	25	20	8.3m		175	4 0	100m	25	5.0u	200u	100	3.5k	5.2k	200u	Si	A1ke
56	EZ350	3.5k	.10	50A	10			125A	9 0	.10	25A	2.0u	100u	100A	3 5k			Si	A3c
57	15L35	3.5k	.15	25	20	8 3m		175	4 0	.15	25	5.0u	20m	100	3.5k			Si	A1ke
58	15L359	3.5k	150m	25	20	8 3m		175	4 0	150m	25	5 0u	200u	100	3.5k	5.2k	200u	Si	A1ke
59	MHV3.5	3 5k	.15	25A$	5 0			125A	4 5	.15	25	1 0u			3 5k			Si	F8
60#	E750C110Si	3.5k	165mØ	45A	40 §	10m		120J	6.0	450m	25J	1.0u		25J	3.5k			Si	
61	20L35	3.5k	20	25	20	8.3m		175	4 0	.20	25	5.0u	.20m	100	3 5k			Si	A1kp
62	20L359	3.5k	200m	25	20	8.3m		175	4 0	200m	25	5.0u	200u	100	3 5k	5 2k	200u	Si	A1kp
63	C3.5E6	3 5k	20	75	15	8 0m		150C	6 0	.20		1.0u	10m	100	3.5k			Si	A3s
64	C3.5E5	3 5k	225	75	20	8 0m		150C	5.0	.23		1 0u	10m	100	3.5k			Si	A3s
65♦	1N2904	3 5k	250m	25A				150S	7 0	250m	25A	500n			3 5k	4.9k		Si	M122b
66♦	1N2905	3.5k	250m	25A				150S	7.0	250m	25A	500n			3.5k	4.9k		Si	A83ak
67♦	1N2906	3.5k	250m	25A				150S	10	250m	25A	500n			3 5k	7.0k		Si	M122c
68♦	1N2907	3.5k	250m	25A				150S	10	250m	25A	500n			3 5k	7 0k		Si	A83ax
69	25L35	3.5k	25	25	20	8.3m		175	4.0	25	25	5.0u	20m	100	3.5k			Si	A1ke
70	25L359	3 5k	250m	25	20	8 3m		175	4 0	250m	25	5 0u	200u	100	3.5k	5 2k	200u	Si	A1ke
71	EH350	3 5k	25	50A	25			150A	4 0 △	25	25A	2.0u△	10mØ	100A	3.5k			Si△	A3c
72▼	250S35	3.5k	250m	55	25	8.3m	1.0	150A	4.0	250m	25	1.0u	20u	100	3.5k			Si	A1tp
73	C3.5E4	3 5k	25	75	25	8 0m		150C	4 0	.25		1 0u	10m	100	3.5k			Si	A3s
74	30L35	3 5k	30	25	40	8 3m		175	4 0	.30	25	5 0u	20m	100	3 5k			Si	A1ke
75	30L359	3.5k	300m	25	40	8 3m		175	4 0	300m	25	5.0u	200u	100	3 5k	5 2k	200u	Si	A1ke
76	40L35	3.5k	.40	25	40	8 3m		175	4 0	40	25	5 0u	.20m	100	3 5k			Si	A1ke
77	40L359	3.5k	400m	25	40	8 3m		175	4 0	400m	25	5 0u	200u	100	3.5k	5.2k	200u	Si	A1ke
78	US35	3.5k	40	25	15	8.3m		150A	7.0	20	25	2.0u	10m	100	3.5k			Si	A1jy
79	50L35	3 5k	50	25	40	8.3m		175	4.0	50	25	5 0u	20m	100	3.5k			Si	A1ke
80	50L359	3.5k	500m	25	40	8 3m		175	4 0	500m	25	5 0u	200u	100	3.5k	5.2k	200u	Si	A1ke
81	60L35	3 5k	60	25	40	8.3m		175	4.0	60	25	5 0u	.20m	100	3.5k			Si	A1ke
82	60L359	3.5k	600m	25	40	8 3m		175	4 0	600m	25	5.0u	200u	100	3 5k	5.2k	200u	Si	A1ke
83	PS2352	3 5k	60	25A$				175A	7 0	20	25A	3.0u			3.5k			Si	M22
84	80L35	3 5k	.80	25	60	8.3m		175	4 0	.80	25	5.0u	20m	100	3.5k			Si	A1ke
85	80L359	3 5k	800m	25	60	8.3m		175	4 0	800m	25	5 0u	200u	100	3 5k	5 2k	200u	Si	A1ke
86	100L35	3.5k	1 0	25	60	8 3m		175	4.0	1.0	25	5 0u	20m	100	3 5k			Si	A1ke
87	100L359	3.5k	1.0	25	60	8 3m		175	4 0	1.0	25	5 0u	200u	100	3 5k	5 2k	200u	Si	A1ke
88	CH1615	3 5k	390	120C	5 2k	8 3m		180S	1 8	390	140C		20m	120C	3.5k	4.4k		Si	F81Ø
89#	SR400A70	3.5k	400	89C	8 0k§	8 3m		150J	1.80	1 2k	25C		40m	150J	3 5k			Si△	S12d
90#	S35AR506	3.5k	560	100B	8.0k			150J	625mØ	560			20m		3.5k			Si△	M400a
91	HV36A	3 6k	05	50A	17 §	10m		175A	5 0		25	6 0u						Si	A3t
92	MV36A	3 6k	.05	50A	16 §	10m		175A	5 0	05	25A	6 0u			3 6k			Si	A3h
93	1N1139	3 6k	065	75	3 5	5.0m		170	27	75m	50		.20m	50	3 6k			Si	F57f
94	1N1140	3.6k	065	75	3.5	5 0m		170	18	75m	50		20m	50	3.6k			Si	F57d
95	P1RP36	3 6k	075	75A$	15			150S	21	08	25	5 0u			3 6k			Si	A1mm
96	10R36B	3.6k	10	25	60			175	8.0	.10	25	5.0u	50m	150	3 6k			Si	
97	HV36B	3 6k	15	50A	17 §	10m		175A	5.0		25	6 0u						Si	A3t
98	MV36B	3 6k	15	50A	16 §	10m		175A	5.0	15	25A	6.0u			3 6k			Si	A3h
99	HV36C	3 6k	25	50A	17 §	10m		175A	5 0		25	6 0u						Si	A3t
100	MV36C	3 6k	25	50A	16 §	10m		175A	5.0	25	25A	6.0u			3 6k			Si	A3h
101	JAN1N1733A	3 6k	350m	25A	6 0	8 3m		150A	6 6 †	1.1	25	100u	12u	150A	3.6k			Si	A1jt
102	1N1752	3 6k	36	75C$	6 0			150	18	.60	25	25u			3 6k			Si	F12s
103	1N1751	3 6k	.37	75C$	6 0			150	27	60	25	25u			3.6k			Si	F12t
104	A1423PBH3AB1	3 6k	375m	50A				150A	5 4	100m	25	5 0u	100u	150A	3 6k			Si	M212d
105	A1425PBH3AB1	3 6k	395m	50A				150A	5.4	100m	25	5.0u	100u	150A	3 6k			Si	A1ga
106	A1423PBC3AB1	3 6k	440m	50A				150A	5.4	100m	25	5 0u	100u	150A	3.6k			Si	M205j
107	A1425MH6AB1	3 6k	475m	50A				150A	5 4	100m	25	5 0u	100u	150A	3 6k			Si	A1jc
108	A1423MH6AB1	3 6k	520m	50A				150A	5.4	100m	25	5 0u	100u	150A	3 6k			Si	M212e
109	75R36B	3 6k	75	25	60			175	8.0	75	25	5 0u	.50m	150	3.6k			Si	
110	A1423MC6AB1	3 6k	750m	50A				150A	5.4	100m	25	5 0u	100u	150A	3 6k			Si	M205n

SYMBOLS AND CODES EXPLAINED IN INTERPRETER

5. RECTIFIERS

IN ORDER OF (1) PIV, (2) MAX AVG FWD CURRENT (3) TEMPERATURE, and (4) TYPE No.

LINE No	4 TYPE No.	1 PIV (V)	MAX AVG FWD DC CURRENT 2 Io (A)	3 at TEMP (°C)	MAX RATINGS @ 25°C SURGE CUR PEAK 1 Cy (A)	PULSE WIDTH (s)	DISS. (W)	MAX TEMP (°C)	MAXIMUM FORWARD VOLTAGE DROP Vf (V)	at If (A)	at TEMP (°C)	MAX. REVERSE CURRENT Ir @25°C & Vr (A)	Ir at T & Vr (A)	TEMP T (°C)	TEST VOLT Vr (V)	AVALANCHE RATINGS MAX V BKDN (V)	MIN SLOPE (A/V)	MAT.	DESCRIPTION DWG. No.
1	100R36B	3 6k	1.0	25	60			175	8.0	1 0	25	5 0u	.50m	150	3.6k			Si	
2	150R36B	3 6k	1.5	25	60			175	8.0	1 5	25	5 0u	50m	150	3.6k			Si	
3#	6RM36	3 6k	1.5	55A	150	10m		125A	6 0	1 5	25A	100u			3 6k			Si	M62e
4	200R36B	3 6k	2 0	25	60			175	8.0	2 0	25	5 0u	50m	150	3.6k			Si	
5	250R36B	3 6k	2 5	25	250			175	8.0	2 5	25	10u	1.0m	150	3.6k			Si	
6	300R36B	3 6k	3 0	25	250			175	8.0	3 0	25	10u	1 0m	150	3.6k			Si	
7	1N4540	3 6k*	3 0	100C	15 §	8.3m		175C	1.85	3.0	100C		2.0m	175C	3.0k			Si	DO4
8	350R36B	3 6k	3.5	25	250			175	8.0	3 5	25	10u	1 0m	150	3.6k			Si	
9	400R36B	3.6k	4 0	25	250			175	8.0	4 0	25	10u	1.0m	150	3.6k			Si	
10	450R36B	3 6k	4 5	25	250			175	8.0	4 5	25	10u	1 0m	150	3.6k			Si	
11	500R36B	3.6k	5 0	25	250			175	8.0	5.0	25	10u	1.0m	150	3 6k			Si	
12	CR302	3.6k†	5 0	50A	250	8 3m		125A	8.1	50	25A	2.0m	2 0m	125A	3 6k			Si△	M503a
13	550R36B	3.6k	5 5	25	250			175	8.0	5.5	25	10u	1.0m	150	3.6k			Si	
14	600R36B	3.6k	6 0	25	250			175	8.0	6 0	25	10u	1.0m	150	3.6k			Si	
15	CR312	3.6k†	9.0	50A	250	8 3m		125A	8 1	50	25A	2 0m	2 0m	125A	3 6k			Si△	M503a
16	CR322	3 6k†	12	50A	400	8 3m		125A	8.52	90	25A	2.0m	2.0m	125A	3 6k			Si△	M503h
17	CR332	3 6k†	17	50A	400	8 3m		125A	8.52	90	25A	2.0m	2.0m	125A	3.6k			Si△	M503h
18	CR342	3 6k†	23	50A	850	8 3m		125A	8.64	120	25A	2.0m	2.0m	125A	3.6k			Si△	M503m
19	CR352	3 6k†	35	50A	850	8.3m		125A	8.64	120	25A	2 0m	2.0m	125A	3 6k			Si△	M503m
20#	S36AR506	3 6k	560	100B	8 0k			150J	625mØ	560			20m		3.6k			Si△	M400a
21▼#	YSD903P36K50	3.6k	1 35k	85C	19k	10m		150J	1.45	1.8k	150J		30m	150J	3.6k			Si	S370
22#	S37AR507	3.7k	420	100B	7 1k			150J	780mØ	420			20m		3 7k			Si△	M400a
23	10R38B	3.8k	10	25	60			175	8 0	10	25	5 0u	50m	150	3 8k			Si	
24♦	1N2908	3.8k	250m	25A				150S	11	250m	25A	500n			3.8k	7 7k		Si	M122d
25♦	1N2909	3.8k	250m	25A				150S	11	250m	25A	500n			3.8k	7 7k		Si	A83bd
26	75R38B	3 8k	75	25	60			175	8.0	.75	25	5.0u	.50m	150	3.8k			Si	
27	100R38B	3 8k	1.0	25	60			175	8.0	1.0	25	5.0u	.50m	150	3 8k			Si	
28	150R38B	3 8k	1.5	25	60			175	8 0	1 5	25	5.0u	.50m	150	3.8k			Si	
29	200R38B	3.8k	2 0	25	60			175	8 0	2.0	25	5 0u	.50m	150	3 8k			Si	
30	250R38B	3.8k	2 5	25	250			175	8.0	2.5	25	10u	1 0m	150	3.8k			Si	
31	300R38B	3 8k	3 0	25	250			175	8.0	3 0	25	10u	1.0m	150	3 8k			Si	
32	350R38B	3.8k	3 5	25	250			175	8.0	3 5	25	10u	1.0m	150	3.8k			Si	
33	400R38B	3 8k	4 0	25	250			175	8.0	4.0	25	10u	1.0m	150	3.8k			Si	
34	450R38B	3.8k	4 5	25	250			175	8 0	4.5	25	10u	1 0m	150	3 8k			Si	
35	500R38B	3 8k	5 0	25	250			175	8 0	5 0	25	10u	1.0m	150	3 8k			Si	
36	550R38B	3.8k	5 5	25	250			175	8.0	5 5	25	10u	1 0m	150	3 8k			Si	
37	600R38B	3 8k	6 0	25	250			175	8 0	6.0	25	10u	1.0m	150	3 8k			Si	
38#	S38AR507	3.8k	420	100B	7 1k			150J	780mØ	420			20m		3.8k			Si△	M400a
39#	0957	3 9k*	50	50A	30			150J	7.2 △	50	25A	1 0u			3 5k			Si*	A1rb △
40#	S39AR507	3 9k	420	100B	7 1k			150J	780mØ	420			20m		3 9k			Si△	M400a
41▼	5K40	4.0k	5 0m	25	1 0	8 0m		150A	4 0	5.0m	25	1 0u	10u	100	4 0k			Si	DO7
42	MH408	4 0k	005	25					6 0	.01	25	02u	01m	100	4 0k			Si	A1at
43	MC162	4 0k	.01	25	1 0	8 0m			4.0	01	25	1.0u			4.0k			Si	A1db
44	MH409	4 0k	01	25					4.5	.01	25	50u	.02m	100	4 0k			Si	A1at
45▼	X10-4	4 0k	10m	25	3 0	8 0m		100A	10	10m	25	1.0u	40u	100	4.0k			Si	A1fc
46▼	10S40	4 0k	10m	55	1 0	8.3m	750m	150A	5 0	10m	25	1.0u	10u	100	4.0k			Si	A1df
47	SCM40	4 0k	10m	55A	2.0	8 3m		150A	15	10m	25A	100n△	2.0u△	100A	4.0k			Si	A1fh
48	2L40	4 0k	.02	25	10	8.3m		175	4 0	.02	25	5 0u	.20m	100	4.0k			Si	A1ke
49	2L409	4 0k	02	25	10	8.3m		175	4 0	02	25	5 0u	.20m	100	4 0k	6 0k	200u	Si	A1ke
50	MC161	4.0k	.02	25	2.0	8 0m			4 0	02	25	1 0u			4.0k			Si	A1db
51▼	25K40	4 0k	25m	25	1 5	8 0m		150A	4.0	25m	25	1.0u	10u	100	4.0k			Si	DO7
52▼	X25-4	4.0k	25m	25	3 0	8 0m		100A	10	25m	25	1.0u	40u	100	4 0k			Si	A1fc
53	HV40G	4.0k	30m	25	20	8 0m	30		10	10m	25	2.0u	10m	100	4 0k			Si	A1fs
54	MC160	4.0k	04	25	3 0	8.0m			4 0	.04	25	1 0u			4.0k			Si	A1db
55	MC1041	4.0k	04	25					5 0	04	25	1 0u							A1cv
56	MC1041A	4 0k	04	25					5.0	04	25	02u							A1cv
57	MC1042	4.0k	04	25					8.0	.04	25	1.0u							A1gr
58	MC1042A	4.0k	04	25					8 0	.04	25	02u							A1gr
59	5L40	4.0k	.05	25	10	8.3m		175	4.0	05	25	5.0u	20m	100	4 0k			Si	A1ke
60	5L409	4.0k	05	25	10	8 3m		175	4 0	.05	25	5.0u	.20m	100	4 0k	6.0k	200u	Si	A1ke
61▼	50K40	4.0k	50m	25	2 0	8.0m		150A	4.0	50m	25	1 0u	10u	100	4.0k			Si	DO7
62	7715-4	4.0k	05	25A	1 5	8 3m		125A	8 0	05	25	1 0u	.10m	125	4 0k			Si△	A1jb
63#	M405	4.0k	50m	25A	2.5	10m		150A	4.0	50m†	25A	1.0u	50u	100A	4 0k			Si△	DO7
64	MC041	4.0k	05	25A$				150A	4.0	.10	25A	1 0u			4 0k			Si	M54a
65	MC041A	4.0k	.05	25A$				150A	4.0	.10	25A	.02u			4 0k			Si	M54a
66	MC042	4.0k	05	25A$				150A	8.0	.10	25A	1.0u			4 0k			Si	M54d
67	MC042A	4 0k	05	25A$				150A	8.0	10	25A	.02u			4.0k			Si	M54d
68	PS2424	4 0k	.05	25A$					10	5m	25A	10u			4.0k			Si	A1gb
69▼	X50-4	4 0k	50m	25	3 0	8 0m		100A	10	50m	25	1.0u	40u	100	4 0k			Si	A1fc
70	VB40	4.0k	50m	40A	3 0	8 3m		150A	10	50m	25	50n	5.0u	100	4 0k			Si△	A1fc
71	HV40A	4 0k	.05	50A	17 §	10m		175A	5.0		25	6.0u						Si	A3t
72	MV40A	4 0k	05	50A	16 §	10m		175A	5.0	05	25A	6.0u			4.0k			Si	A3h
73▼	50S40	4 0k	50m	55	2 0	8 3m	750m	150A	5 0	50m	25	1 0u	10u	100	4.0k			Si	A1df
74	1N2379	4.0k	.05	100A	12	8.3m		150A	15	.05	100A		100m	100A	600			Si	A1hu
75	HV40E4	4.0k	60m	25	1 0	8 0m	.25	125A	4.0	10m	25	20n	3.0u	100	4.0k			Si	A83f
76	HV40P4	4.0k	60m	25	1 0	8.0m	250m	125A	4 0	10m	25	20n	3.0u	100	4 0k			Si	A94h
77	HV40E3	4.0k	70m	25	1.0	8 0m	25	125A	3.0	10m	25	20n	3.0u	100	4.0k			Si	A83f
78	HV40P3	4.0k	70m	25	1 0	8 0m	250m	125A	3.0	10m	25	20n	3.0u	100	4.0k			Si	A94h
79	10L40	4.0k	10	25	20	8 3m		175	4.0	10	25	5 0u	.20m	100	4 0k			Si	A1ke
80	10L409	4.0k	10	25	20	8.3m		175	4.0	10	25	5.0u	.20m	100	4.0k	6 0k	200u	Si	A1ke
81	10R40B	4.0k	10	25	60			175	8.0	10	25	10u	1 0m	150	4 0k			Si	
82#	HSC4	4.0k	10	25A$				150A	8 0	10	25A	5 0u			4.0k			Si	A1jh
83	MHV4	4 0k	10	25A$	3 5			125A	9.0	.10	25	1.0u			4.0k			Si	F8
84	EZ400	4 0k	100m	50A	10			125A	9.0	100m	25A	2.0u	100u	100A	4.0k			Si	A3c
85	1N5181	4 0k	10	55A	4 0 §	8 3m		175A	10	.10	55A		1.0m△	175A	4 0k			Si	A1fj
86▼	100S40	4.0k	100m	55	3 0	8.3m	750m	150A	5 0	100m	25	1 0u	10u	100	4.0k			Si	A1df
87	SC40Ø	4 0k	100m	55$	4 0			175	10.5	100m	25	1.0u	20m	100	4 0k			Si	A1fg
88	SCE40	4 0k	10	55A	4 0			175	10 △	10	25A	1 0u△	02m△	100A	4 0k			Si	A1fh
89	JAN1N5181	4 0k	125m	25A	1.0	8 3m		175A	10	130m	25	1 0u	20u	100A	4 0k			Si	A1fk
90	1N2382	4 0k†	.15	25A$	6 0	8.0m		150A	18	.10	25A	10u	10m	100A	4.0k			Si	A1jh
91	15L40	4 0k	.15	25	20	8 3m		175	4.0	15	25	5.0u	.20m	100	4 0k			Si	A1ke
92	15L409	4.0k	15	25	20	8 3m		175	4.0	.15	25	5 0u	.20m	100	4.0k	6 0k	200u	Si	A1ke
93	7701-4A	4 0k	.15	25	3.0	8.3m		125A	8.0	05	25	1 0u	10m	125	4 0k			Si△	A1jb
94	PS1144	4 0k†	.15	25A$	2 5 §	8.0m		175A	18	.10	25A							Si	A1jg
95	HV40B	4 0k	.15	50A	17 §	10m		175A	5 0		25	6 0u						Si	A3t
96	MV40B	4.0k	15	50A	16 §	10m		175A	5.0	15	25A	6 0u			4.0k			Si	A3h
97	SE2382	4 0k	15	50A	3 0 §	10m		150A	14	20	25	5 0u	75m	100	4 0k			Si	A1jh
98▼	HG4	4.0k	150m	55A	5.0	8 3		150A	6 0	100m	25A	5.0u	25	100A	4.0k			Si	A94j
99	SCE40A	4 0k	.15	55A	6.0			175	6.0 △	10	25A	1.0u△	02m△	100A	4.0k			Si	A1fh
100	DICR4	4 0k	190m	50	10	8 3m		150S	7 0	190m	25	2 0u			4 0k			Si	A1dm
101	20L40	4 0k	20	25	20	8 3m		175	4.0	20	25	5.0u	20m	100	4 0k			Si	A1ke
102	20L409	4 0k	20	25	20	8.3m		175	4.0	20	25	5 0u	20m	100	4.0k	6.0k	200u	Si	A1ke
103	540	4.0k	200m	25	20	8 0m		150	8.0	200m	25	2.0u			4 0k			Si△	A79c
104	DI540	4 0k	.20	25A$	20	8 0m		100A	8 0	20	25	2.0u			4 0k			Si	A79c
105	SLA04	4.0k	200m	25				150	5.0	1.0		6 0u	75u	100	4.0k			Si	A1dj
106▼	200S40	4 0k	200m	55	20	8 3m	1 0	150A	5 0	200m	25	1.0u	20u	100	4.0k			Si	A1tp
107	HVC400	4 0k	.20	55A	6 0			150	8 0	.20	25	10u			4 0k			Si	M291c
108	C4.0E6	4.0k	20	75	15	8.0m		150C	6.0	20		1 0u	.10m	100	4.0k			Si	A3s
109	C4 0E5	4.0k	22	75	20	8 0m		150C	5.0	23		1.0u	.10m	100	4 0k			Si	A3s
110♦	1N2910	4 0k	250m	25A				150S	8.0	250m	25A	500n			4 0k	5 6k		Si	M122c

SYMBOLS AND CODES EXPLAINED IN INTERPRETER

5. RECTIFIERS

IN ORDER OF (1) PIV, (2) MAX AVG FWD CURRENT (3) TEMPERATURE, and (4) TYPE No.

LINE No	4 TYPE No	1 PIV (V)	MAX AVG FWD DC CURRENT 2 Io (A)	3 at TEMP (°C)	MAX RATINGS @ 25°C SURGE CUR. PEAK 1 Cy (A)	PULSE WIDTH (s)	DISS. (W)	MAX. TEMP (°C)	MAXIMUM FORWARD VOLTAGE DROP Vf (V)	at If (A)	at TEMP (°C)	MAX. REVERSE CURRENT Ir @25°C & Vr (A)	Ir at T & Vr (A)	TEMP T (°C)	TEST VOLT Vr (V)	AVALANCHE RATINGS MAX V BKDN. (V)	MIN SLOPE (A/V)	MAT.	DESCRIPTION DWG. No.
1♦	1N2911	4.0k	250m	25A				150S	8 0	250m	25A	500n			4 0k	5.6k		Si	A83ax
2	25L40	4 0k	25	25	20	8 3m		175	4 0	25	25	5 0u	.20m	100	4.0k			Si	A1ke
3	25L409	4 0k	25	25	20	8 3m		175	4 0	25	25	5.0u	20m	100	4 0k	6 0k	200u	Si	A1ke
4#	M40K	4 0k	250m	25A	2 0	10m		150A	6.0	250m†	25A	1 0u	50u	100A	4.0k			Si△	A83k
5	NTD04	4.0k$	.25	25A	10			125A	6 0 △	25	25A	1 0u△	10m△	100A	4 0k			Si△	A1gf
6	SCBR40A	4.0k	25	30C	2 0			150										Si	M45e*
7	EH400	4 0k	25	50A	25			150A	4 0 △	25	25A	2.0u△	.10m∅	100A	4.0k			Si△	A3c
8	HV40C	4.0k	25	50A	17 §	10m		175A	5 0		25	6.0u						Si	A3t
9	MV40C	4.0k	.25	50A	16 §	10m		175A	5.0	25	25A	6 0u			4 0k			Si	A3h
10▼	250S40	4 0k	250m	55	25	8.3m	1 0	150A	4.0	250m	25	1.0u	20u	100	4 0k			Si	A1tp
11	SLA04HF	4 0k	25	60	20	8.3m		150	8 0	30	50	5.0u	20m	100	4.0k			Si	A134d
12	BH400	4 0k	250m	75A	20	8.3m		150A	4.0 △	250m	25A	10u△			4 0k			Si	DO27
13	C4 0E4	4 0k	.25	75	25	8 0m		150C	4 0	.25		1.0u	.10m	100	4.0k			Si	A3s
14	MR995A	4 0k$	250m	75A	15 §			150J	1 7	250m	75A	10u	100u	75A	4.0k			Si	A1dt
15	30L40	4 0k	.30	25	40	8.3m		175	4 0	30	25	5 0u	.20m	100	4.0k			Si	A1ke
16	30L409	4 0k	.30	25	40	8 3m		175	4 0	30	25	5 0u	20m	100	4 0k	6.0k	200u	Si	A1ke
17	A1423PD4AC1	4 0k	300m	50A				150A	7 2	100m	25	5 0u	100u	150A	4 0k			Si	A83x
18	DER4	4 0k	300m	50	40	8 3m	2 0	150S	7.0	300m	25	2.0u	20u	125	4.0k			Si	A1dm
19	1N2382A	4 0k	35	25A$	9.0	8 0m		200A	6.0	.40	25	1.0u	01		4 0k			Si	A1gd
20	PS1851	4 0k	.35	25				200A	6.0	40	25	1 0u	01		4.0k			Si	A1jg
21	US40	4 0k	35	25	15	8.3m		150A	7 0	20	25	2 0u	10m	100	4.0k			Si	A1jy
22	40L40	4 0k	40	25	40	8.3m		175	4 0	40	25	5 0u	.20m	100	4 0k			Si	A1ke
23	40L409	4.0k	40	25	40	8.3m		175	4.0	40	25	5 0u	20m	100	4 0k	6.0k	200u	Si	A1ke
24	840C	4.0k	400m	25	50	8.0m		150	6 0	400m	25	5 0u	25u	100	4 0k			Si△	M519a
25	B223-40	4 0k	40	25	60			175A	2 0		150	5 0u	.50m	150A				Si	A1rx
26	PS1444	4 0k†	40	25A$				175A	8 0	40	25A		05m	100A	4 0k			Si	F13b
27	SLDHV4	4 0k	40	25A	22			175A	9 0		25							Si	M239c
28	DI840C	4 0k	40	40A	50	8 3m		150J	6 0	40	25	5 0u	02		4.0k			Si	C42m
29	DI540LS	4 0k	40	50A	40	8 0m		125	5 8	40	25A	5 0u			4 0k			Si	C42d
30#	HSKE2500/1100-3																		
		4 0k	450m	45A	55	8 0m	3 7k∅	150A	5 5	2 0	25J					7.5k∅		Si	A167e
31	50L40	4 0k	.50	25	40	8.3m		175	4 0	50	25	5 0u	20m	100	4 0k			Si	A1ke
32	50L409	4 0k	50	25	40	8 3m		175	4 0	50	25	5 0u	20m	100	4.0k	6.0k	200u	Si	A1ke
33#	D40H	4 0k	50	25A	30	10m		100A†	12	50 †	25	50u			4.0k			Si△	M62
34#	D40HL	4.0k	500m	25A	30	10m		100A	6 0	500m†	25A	1 0u						Si△	M62
35	SCBR40	4 0k	50	30C	20			150										Si	M45d*
36	60L40	4 0k	60	25	40	8 3m		175	4 0	60	25	5 0u	20m	100	4 0k			Si	A1ke
37	60L409	4 0k	60	25	40	8 3m		175	4 0	60	25	5 0u	20m	100	4 0k	6.0k	200u	Si	A1ke
38	PS2353	4 0k	.60	25A$				175A	7 0	20	25A	3.0u			4 0k			Si	M22
39	CR104	4 0k	625	60A	15			125A	4 2 ∅	63	60A	600u△	30m∅	60A	4 0k			Si△	M100b∅
40	75R40B	4 0k	75	25	60			175	8 0	75	25	10u	1 0m	150	4.0k			Si	
41	SLA04HC	4 0k	750m	75	50	8 3m		150A	6 0	1 0	25	5 0u	100u	100	4 0k			Si	A134d
42	80L40	4 0k	80	25	60	8 3m		175	4 0	80	25	5 0u	20m	100	4.0k			Si	A1ke
43	80L409	4 0k	80	25	60	8 3m		175	4 0	80	25	5 0u	20m	100	4 0k	6.0k	200u	Si	A1ke
44	100L40	4 0k	1 0	25	60	8 3m		175	4.0	1 0	25	5 0u	20m	100	4 0k			Si	A1ke
45	100L409	4 0k	1 0	25	60	8 3m		175	4 0	1 0	25	5 0u	20m	100	4.0k	6.0k	200u	Si	A1ke
46	100R40B	4 0k	1.0	25	60			175	8 0	1 0	25	10u	1.0m	150	4 0k			Si	
47#	F40H	4 0k	1 0	25A	70	10m		100A†	8 0	1 0 †	25		10m	25A	4 0k			Si△	M62
48	SLD4	4 0k	1 1	30A	50			125A	9 0	1 1	25A	10u			4 0k			Si△	M239c
49	BR840A†	4 0k	1 25	25	50	8 0m		150	7 00	75	25	5 0u			4 0k			Si△	M540a
50	1N2667	4 0k	1 5	25A	15	8 3m		165A	13	1 5	25A	800u			4.0k			Si	M126g
51	150R40B	4 0k	1 5	25	60			175	8 0	1 5	25	10u	1 0m	150	4.0k			Si	
52	2ASLD4	4 0k	2 0	25A	200			175A	7 0		25							Si	M239c
53	200R40B	4 0k	2 0	25	60			175	8 0	2.0	25	10u	1 0m	150	4 0k			Si	
54	VC40	4 0k†	2 0	40C	50			125A	8 0	10	25	1 0u	1 0m	125A	4.0k			Si△	M430
55#	P40H	4 0k	2 0	55A	230	10m		125A	7 7	2 0 †	25	100u			4 0k			Si△	M267
56	250R40B	4 0k	2 5	25	250			175	8 0	2 5	25	10u	1 0m	150	4 0k			Si	
57	300R40B	4 0k	3 0	25	250			175	8.0	3 0	25	10u	1.0m	150	4 0k			Si	
58	KHP4	4 0k	3 0	25A	300			175A	6 0		25A	5 0u			4.0k			Si△	M239v
59	SODSLD4	4 0k	3 0	30A	290			140A	7.0	3 0	25A	25u			4 0k			Si△	M239v
60	350R40B	4 0k	3.5	25	250			175	8 0	3 5	25	10u	1.0m	150	4 0k			Si	
61	400R40B	4 0k	4.0	25	250			175	8 0	4 0	25	10u	1 0m	150	4 0k			Si	
62	450R40B	4 0k	4.5	25	250			175	8 0	4 5	25	10u	1 0m	150	4 0k			Si	
63	500R40B	4 0k	5.0	25	250			175	8 0	5.0	25	10u	1 0m	150	4 0k			Si	
64	550R40B	4 0k	5 5	25	250			175	8 0	5 5	25	10u	1.0m	150	4 0k			Si	
65	SCPH8	4 0k	5 5	55A	300			150A	8 0	3 0	25A	110u	200u	100A	4 0k			Si	M496
66	600R40B	4.0k	6.0	25	250			175	8 0	6.0	25	10u	1.0m	150	4 0k			Si	
67	SCPD16	4 0k	11	55A	300			150A	8 0	3 0	25A	110u	200u	100A	4 0k			Si	M496
68	SCPN16	4 0k	11	55A	300			150A	8 0	3 0	25A	110u	200u	100A	4 0k			Si	M496
69	SCPP16	4 0k	11	55A	300			150A	8.0	3.0	25A	110u	200u	100A	4 0k			Si	M496
70	JAN1N3992	4 0k$	100	100	14	8 0m		175S	5 0	25	25	5 0u	.10m	100	4 0k			Si	Z55
71	CH1616	4 0k	370	120C	5.2k	8 3m		180S	1 8	370	140C		20m	120C	4 0k	5.0k		Si	F81∅
72#	SR400A80	4 0k	400	89C	8.0k§	8 3m		150J	1 80	1 2k	25C		40m	150J	4 0k			Si△	S12d
73#	S40AR507	4 0k	420	100B	7 1k			150J	780m∅	420			20m		4.0k			Si△	M400a
74▼#	SiD500P40K62	4 0k	600	95B	7 1k	10m		175J	1 33	1.0k	150J		18m	175J	1 0k			Si	S369
75#	S41AR507	4 1k	420	100B	7.1k			150J	780m∅	420			20m		4 1k			Si△	M400a
76	10R42B	4 2k	.10	25	60			175	10	10	25	5 0u	.50m	150	4 2k			Si	
77♦	1N2912	4 2k	250m	25A				150S	12	250m	25A	500n			4.2k	8 4k		Si	M122d
78♦	1N2913	4 2k	250m	25A				150S	12	250m	25A	500n			4.2k	8 4k		Si	A83bd
79	A1423MH7AB1	4 2k	490m	50A				150A	6 3	100m	25	5 0u	100u	150A	4.2k			Si	M212f
80	75R42B	4 2k	.75	25	60			175	10	75	25	5 0u	.50m	150	4 2k			Si	
81	100R42B	4 2k	1.0	25	60			175	10	1.0	25	5 0u	.50m	150	4.2k			Si	
82	150R42B	4 2k	1.5	25	60			175	10	1 5	25	5 0u	50m	150	4 2k			Si	
83	6RM42	4 2k	1.5	55A	150	10m		125A	7 0	1 5	25A	100u			4.2k			Si	M62e
84	200R42B	4.2k	2 0	25	60			175	10	2 0	25	5 0u	.50m	150	4 2k			Si	
85	250R42B	4 2k	2.5	25	250			175	10	2 5	25	10u	1 0m	150	4 2k			Si	
86	300R42B	4 2k	3.0	25	250			175	10	3 0	25	10u	1.0m	150	4.2k			Si	
87	350R42B	4 2k	3 5	25	250			175	10	3.5	25	10u	1.0m	150	4.2k			Si	
88	400R42B	4 2k	4.0	25	250			175	10	4 0	25	10u	1 0m	150	4 2k			Si	
89	450R42B	4 2k	4.5	25	250			175	10	4 5	25	10u	1 0m	150	4 2k			Si	
90	500R42B	4 2k	5.0	25	250			175	10	5 0	25	10u	1.0m	150	4 2k			Si	
91	550R42B	4 2k	5 5	25	250			175	10	5 5	25	10u	1 0m	150	4.2k			Si	
92	600R42B	4 2k	6.0	25	250			175	10	6 0	25	10u	1 0m	150	4 2k			Si	
93#	S42AR507	4 2k	420	100B	7 1k			150J	780m∅	420			20m		4 2k			Si△	M400a
94▼#	SiD500P42K62	4 2k	600	95B	7 1k	10m		175J	1.33	1.0k	150J		18m	175J	4.2k			Si	S369
95#	S43AR507	4 3k	420	100B	7.1k			150J	780m∅	420			20m		4 3k			Si△	M400a
96	10R44B	4 4k	10	25	60			175	10	10	25	5 0u	.50m	150	4 4k			Si	
97#	0958	4 4k*	500m	50A	30			150J	8.4 △	500m	25A	1.0u			3 5k			Si*	A1rp △
98	75R44B	4.4k	.75	25	60			175	10	75	25	5 0u	.50m	150	4 4k			Si	
99	100R44B	4 4k	1.0	25	60			175	10	1 0	25	5 0u	.50m	150	4 4k			Si	
100	150R44B	4 4k	1.5	25	60			175	10	1 5	25	5.0u	.50m	150	4 4k			Si	
101	200R44B	4.4k	2 0	25	60			175	10	2 0	25	5 0u	.50m	150	4.4k			Si	
102	250R44B	4 4k	2 5	25	250			175	10	2.5	25	10u	1.0m	150	4 4k			Si	
103	300R44B	4 4k	3 0	25	250			175	10	3 0	25	10u	1 0m	150	4.4k			Si	
104	350R44B	4 4k	3 5	25	250			175	10	3 5	25	10u	1 0m	150	4.4k			Si	
105	400R44B	4 4k	4 0	25	250			175	10	4 0	25	10u	1 0m	150	4.4k			Si	
106	450R44B	4 4k	4 5	25	250			175	10	4 5	25	10u	1.0m	150	4.4k			Si	
107	500R44B	4 4k	5.0	25	250			175	10	5 0	25	10u	1.0m	150	4 4k			Si	
108	550R44B	4 4k	5 5	25	250			175	10	5 5	25	10u	1 0m	150	4 4k			Si	
109	600R44B	4 4k	6 0	25	250			175	10	6 0	25	10u	1.0m	150	4 4k			Si	

SYMBOLS AND CODES EXPLAINED IN INTERPRETER

5. RECTIFIERS

IN ORDER OF (1) PIV, (2) MAX AVG FWD CURRENT (3) TEMPERATURE, and (4) TYPE No.

LINE No.	TYPE No.	1 PIV (V)	MAX AVG FWD DC CURRENT 2 Io (A)	3 at TEMP (°C)	MAX RATINGS @ 25°C SURGE CUR. PEAK 1 Cy (A)	PULSE WIDTH (s)	DISS. (W)	MAX TEMP (°C)	MAXIMUM FORWARD VOLTAGE DROP Vf (V)	at If (A)	at TEMP (°C)	MAX. REVERSE CURRENT Ir @25°C & Vr (A)	Ir at T & Vr (A)	TEMP T (°C)	TEST VOLT Vr (V)	AVALANCHE RATINGS MAX V BKDN. (V)	MIN SLOPE (A/V)	MAT.	DESCRIPTION DWG. No.
1▼#	SiD500P44K62	4 4k	600	95B	7 1k	10m		175J	1.33	1.0k	150J		18m	175J	4.4k			Si	S369
2	HW4G	4 5k	.01	150					8.0	.01	25	2.0u			4.0k			Si	A1gk
3	2L45	4 5k	02	25	10	8.3m		175	5.0	02	25	5 0u	.20m	100	4.5k			Si	A1kp
4	2L459	4.5k	20m	25	10	8 3m		175	5.0	20m	25	5.0u	200u	100	4.5k	6.7k	200u	Si	A1kp
5	5L45	4.5k	05	25	10	8.3m		175	5.0	05	25	5.0u	.20m	100	4.5k			Si	A1kp
6	5L459	4.5k	50m	25	10	8 3m		175	5.0	50m	25	5 0u	200u	100	4.5k	6.7k	200u	Si	A1kp
7	10L45	4 5k	10	25	20	8.3m		175	5.0	10	25	5.0u	.20m	100	4.5k			Si	A1kp
8	10L459	4.5k	100m	25	20	8 3m		175	5.0	100m	25	5.0u	200u	100	4.5k	6.7k	200u	Si	A1kp
9	15L45	4.5k	.15	25	20	8.3m		175	5.0	.15	25	5.0u	.20m	100	4.5k			Si	A1kp
10	15L459	4.5k	150m	25	20	8 3m		175	5.0	150m	25	5.0u	200u	100	4.5k	6 7k	200u	Si	A1kp
11	EK450	4.5k	.15	50	15	8.3m		150	6.0	.15	25	2 0u	.10m	100	4.5k			Si	DO27
12	20L45	4.5k	.20	25	20	8.3m		175	5.0	20	25	5.0u	.20m	100	4.5k			Si	A1kp
13	20L459	4.5k	200m	25	20	8 3m		175	5.0	200m	25	5 0u	200u	100	4.5k	6.7k	200u	Si	A1kp
14▼	200S45	4.5k	200m	55	20	8.3m	1.0	150A	5.0	200m	25	1.0u	20u	100	4.5k			Si	A1tp
15	C4.5E6	4.5k	20	75	15	8.0m		150C	6.0	.20		1.0u	.10m	100	4.5k			Si	A3s
16	CP126	4.5k	20	75					6 0		25								M84ap
17	C4.5E5	4.5k	225	75	20	8 0m		150C	5 0	.23		1 0u	.10m	100	4.5k			Si	A3s
18♦	1N2914	4.5k	250m	25A				150S	9.0	250m	25A	500n			4.5k	6.3k		Si	M122c
19♦	1N2915	4 5k	250m	25A				150S	9 0	250m	25A	500n			4.5k	6.3k		Si	A83ax
20♦	1N2916	4.5k	250m	25A				150S	13	250m	25A	500n			4.5k	9.1k		Si	M122d
21♦	1N2917	4.5k	250m	25A				150S	13	250m	25A	500n			4.5k	9.1k		Si	A83bd
22	25L45	4.5k	25	25	20	8.3m		175	5.0	25	25	5.0u	.20m	100	4.5k			Si	A1kp
23	25L459	4 5k	250m	25	20	8.3m		175	5.0	250m	25	5.0u	200u	100	4.5k	6.7k	200u	Si	A1kp
24	1N1262	4.5k	250m	100A$				100A	12	250m	25	2.0m			4.5k			Si	M84p
25	30L45	4 5k	30	25	40	8.3m		175	5 0	.30	25	5 0u	.20m	100	4.5k			Si	A1kp
26	30L459	4 5k	300m	25	40	8 3m		175	5.0	300m	25	5 0u	200u	100	4.5k	6.7k	200u	Si	A1kp
27	US45	4.5k	.30	25	15	8.3m		150A	8.0	.20	25	2.0u	.10m	100	4 5k			Si	A1gx
28	CR204	4.5k	.30	60A	9 0			125A	3.6 Ø	.30	60A	10uΔ	.10mØ	100	4.5k			SiΔ	A83bzØ
29	40L45	4.5k	.40	25	40	8.3m		175	5.0	.40	25	5.0u	.20m	100	4 5k			Si	A1kp
30	40L459	4.5k	400m	25	40	8.3m		175	5 0	400m	25	5.0u	200u	100	4.5k	6.7k	200u	Si	A1kp
31	50L45	4.5k	.50	25	40	8 3m		175	5 0	.50	25	5.0u	.20m	100	4.5k			Si	A1kp
32	50L459	4 5k	500m	25	40	8.3m		175	5 0	500m	25	5.0u	200u	100	4 5k	6.7k	200u	Si	A1kp
33	CP127	4.5k	50	75					6 0		25								M84aq
34	PS2354	4.5k	.53	25A$				175A	9.0	.20	25A	3 0u			4.5k			Si	M22
35	60L45	4 5k	.60	25	40	8 3m		175	5 0	.60	25	5 0u	.20m	100	4 5k			Si	A1kp
36	60L459	4 5k	600m	25	40	8.3m		175	5 0	600m	25	5.0u	200u	100	4 5k	6.7k	200u	Si	A1kp
37	80L45	4 5k	80	25	60	8.3m		175	5 0	.80	25	5.0u	.20m	100	4.5k			Si	A1kp
38	80L459	4 5k	800m	25	60	8.3m		175	5.0	800m	25	5.0u	200u	100	4.5k	6.7k	200u	Si	A1kp
39	100L45	4.5k	1.0	25	60	8.3m		175	5.0	1.0	25	5.0u	.20m	100	4.5k			Si	A1kp
40	100L459	4 5k	1.0	25	60	8 3m		175	5.0	1.0	25	5.0u	200u	100	4.5k	6.7k	200u	Si	A1kp
41	10R46B	4.6k	.10	25	60			175	10	.10	25	5.0u	.50m	150	4.6k			Si	
42	75R46B	4 6k	.75	25	60			175	10	.75	25	5 0u	50m	150	4 6k			Si	
43#	SKV1/2B3000/2700-1 2	4.6k	800m	45A	50	70m		150	9.0	1.9	25		100u	25	3.0k	9.0kØ		Si	
44	100R46B	4.6k	1.0	25	60			175	10	1.0	25	5.0u	.50m	150	4.6k			Si	
45	150R46B	4 6k	1 5	25	60			175	10	1.5	25	5.0u	.50m	150	4 6k			Si	
46	200R46B	4 6k	2.0	25	60			175	10	2.0	25	5.0u	.50m	150	4.6k			Si	
47	250R46B	4.6k	2 5	25	250			175	10	2.5	25	10u	1 0m	150	4.6k			Si	
48	300R46B	4.6k	3.0	25	250			175	10	3.0	25	10u	1.0m	150	4 6k			Si	
49	350R46B	4.6k	3 5	25	250			175	10	3.5	25	10u	1.0m	150	4.6k			Si	
50	400R46B	4 6k	4.0	25	250			175	10	4.0	25	10u	1 0m	150	4.6k			Si	
51	450R46B	4 6k	4.5	25	250			175	10	4 5	25	10u	1.0m	150	4.6k			Si	
52	500R46B	4.6k	5 0	25	250			175	10	5 0	25	10u	1.0m	150	4.6k			Si	
53	550R46B	4 6k	5 5	25	250			175	10	5.5	25	10u	1.0m	150	4.6k			Si	
54	600R46B	4 6k	6.0	25	250			175	10	6 0	25	10u	1.0m	150	4.6k			Si	
55▼#	SiD500P46K62	4.6k	600	95B	7.1k	10m		175J	1 33	1.0k	150J		18m	175J	4 6k			Si	S369
56	1N1142	4.8k	05	75	3.5	5.0m		170	24	57m	50		.20m	50	4.8k			Si	F57d
57	1N1141	4.8k	06	75	3 5	5.0m		170	36	70m	50		20m	50	4.8k			Si	F57f
58	P1RP48	4.8k	.07	75A$	15			150S	21	.07	25	5.0u			4.8k			Si	A1mz
59	10R48B	4.8k	.10	25	60			175	10	.10	25	5.0u	.50m	150	4.8k			Si	
60	A1425PBH4AB1	4.8k	280m	50A				150A	7 2	100m	25	5.0u	100u	150A	4.8k			Si	A1ga
61	A1423PBH4AB1	4.8k	310m	50A				150A	7.2	100m	25	5.0u	100u	150A	4.8k			Si	M212
62	1N1754	4.8k	.32	75C$	6.0			150	24	.60	25	25u			4.8k			Si	F12s
63	1N1753	4.8k	.33	75C$	6 0			150	36	.60	25	25u			4.8k			Si	F12t
64	A1423PBC4AB1	4 8k	350m	50A				150A	7.2	100m	25	5.0u	100u	150A	4.8k			Si	M205k
65	A1425MH8AB1	4.8k	410m	50A				150A	7.2	100m	25	5.0u	100u	150A	4.8k			Si	A1jd
66	A1423MH8AB1	4 8k	420m	50A				150A	7.2	100m	25	5.0u	100u	150A	4.8k			Si	M212f
67	75R48B	4.8k	75	25	60			175	10	.75	25	5.0u	.50m	150	4 8k			Si	
68	100R48B	4.8k	1.0	25	60			175	10	1.0	25	5.0u	.50m	150	4.8k			Si	
69	1N2668	4.8k	1.5	25A	15	8 3m		165A	15 6	1.5	25A	800u			4.8k			Si	M126h
70	150R48B	4.8k	1.5	25	60			175	10	1.5	25	5.0u	.50m	150	4.8k			Si	
71#	6RM48	4 8k	1.5	55A	150	10m		125A	8 0	1.5	25A	100u			4.8k			Si	M62e
72	200R48B	4.8k	2.0	25	60			175	10	2.0	25	5.0u	.50m	150	4.8k			Si	
73#	P48H	4.8k	2.0	55A	230	10m		125A	8.8	2.0 †	25	100u			4.8k			SiΔ	M267
74	250R48B	4 8k	2.5	25	250			175	10	2.5	25	10u	1.0m	150	4.8k			Si	
75	300R48B	4.8k	3.0	25	250			175	10	3.0	25	10u	1.0m	150	4.8k			Si	
76	350R48B	4 8k	3.5	25	250			175	10	3.5	25	10u	1 0m	150	4.8k			Si	
77	400R48B	4.8k	4.0	25	250			175	10	4.0	25	10u	1 0m	150	4.8k			Si	
78	450R48B	4.8k	4 5	25	250			175	10	4.5	25	10u	1 0m	150	4.8k			Si	
79	500R48B	4.8k	5.0	25	250			175	10	5.0	25	10u	1.0m	150	4.8k			Si	
80	CR303	4.8k†	5.0	50A	250	8.3m		125A	10.8	50	25A	2.0m	2.0m	125A	4.8k			SiΔ	M503b
81	550R48B	4.8k	5 5	25	250			175	10	5.5	25	10u	1.0m	150	4.8k			Si	
82	600R48B	4 8k	6.0	25	250			175	10	6.0	25	10u	1.0m	150	4.8k			Si	
83	CR313	4.8k†	9.0	50A	250	8.3m		125A	10 8	50	25A	2.0m	2.0m	125A	4.8k			SiΔ	M503b
84	CR323	4.8k†	12	50A	400	8.3m		125A	11.3	90	25A	2.0m	2.0m	125A	4.8k			SiΔ	M503i
85	CR333	4.8k†	17	50A	400	8 3m		125A	11.3	90	25A	2.0m	2.0m	125A	4.8k			SiΔ	M503i
86	CR343	4 8k†	23	50A	850	8.3m		125A	11 5	120	25A	2.0m	2.0m	125A	4.8k			SiΔ	M503h
87	CR353	4 8k†	35	50A	850	8.3m		125A	11 5	120	25A	2.0m	2.0m	125A	4.8k			SiΔ	M503n
88▼#	SiD500P48K62	4.8k	600	95B	7.1k	10m		175J	1.33	1.0k	150J		18m	175J	4.8k			Si	S369
89#	M8320	5.0k	1.0m	25A	500m				6.0	3.0m	25A	5.0u			5.0k			Si	A1ta
90▼	5K50	5.0k	5.0m	25	1.0	8.0m		150A	4 0	5.0m	25	1.0u	10u	100	5.0k			Si	DO7
91	MH410	5 0k	5.0m	25					6.0	10m	25	20n	2.0u	100	5.0k			Si	A1at
92▼	HV5-5	5.0k	5.0m	40	3 0	8.0m		150A	12	5.0m	25	1.0u	40u	100	5.0k			SiΔ	A1td
93▼	HV5-5F	5.0k	5.0m	40	3.0	8.0m		125A	15	5.0m	25	2.0u	100u	100	5.0k			SiΔ	A1td
94	VF5-5	5.0k†	5.0m	40A	3.0			125A	12	5.0m	25	1.0u	40u	125A	5.0k			SiΔ A	107h
95	KLR5	5.0k	10m	25	5.0			150S	4.4 §Δ	10m†	25	2.0uΔ	100u	70	5.0k	6.0kØ		Si	A1hg
96	MH411	5.0k	.01	25					4.5	.01	25	.50u	02m	100	5.0k			Si	A1at
97▼	X10-5	5.0k	10m	25	3.0	8.0m		100A	10	10m	25	1.0u	40u	100	5.0k			Si	A1fc
98▼	HV10-5	5.0k	10m	40	3 0	8.0m		150A	12	10m	25	1.0u	40u	100	5.0k			SiΔ	A1td
99▼	HV10-5F	5.0k	10m	40	3.0	8.0m		125A	15	10m	25	2.0u	100u	100	5.0k			SiΔ	A1td
100	VF10-5	5.0k†	01	40A	3.0			125A	12	.01	25	1.0u	.04m	125A	5.0k			SiΔ	A83af
101▼	10S50	5.0k	10m	55	1.0	8.3m	750m	150A	5.0	10m	25	1.0u	10u	100	5.0k			Si	A1df
102	SCM50	5.0k	10m	55A	2.0	8.3m		150A	15	10m	25A	100nΔ	2.0uΔ	100A	5.0k			Si	A1fh
103	VG5	5.0k†	15m	40A	3.0			125A	12	15m	25	1.0u	40u	125A	5.0k			SiΔ	A83t
104	2L50	5.0k	.02	25	10	8.3m		175	5 0	.02	25	5.0u	.20m	100	5.0k			Si	A1kp
105	2L509	5.0k	.02	25	10	8.3m		175	5 0	.02	25	5.0u	.20m	100	5.0k	7.5k	200u	Si	A1kp
106	KL5	5.0k	20m	25	5.0			150S	4 4 §Δ	20m†	25	1.0uΔ	50u	100	5.0k	6.0kØ		Si	A1hg
107	MC201Δ	5.0k	.02	25	75	8.0m			9 0	.02	25	1.5u			5.0k			Si	A1hy
108▼	SP5	5.0k	20m	25	3.0	8.3m	500m	150A	12	20m	25	500n	10u	100	5.0k			Si	A267e
109▼	25K50	5.0k	25m	25	1.5	8.0m		150A	4.0	25m	25	1.0u	10u	100	5.0k			Si	DO7

SYMBOLS AND CODES EXPLAINED IN INTERPRETER

5. RECTIFIERS

IN ORDER OF (1) PIV, (2) MAX AVG FWD CURRENT (3) TEMPERATURE, and (4) TYPE No.

LINE No.	4 TYPE No.	1 PIV (V)	MAX AVG FWD DC CURRENT 2 Io (A)	3 at TEMP (°C)	MAX RATINGS @ 25°C SURGE CUR. PEAK 1 Cy (A)	PULSE WIDTH (s)	DISS. (W)	MAX. TEMP (°C)	MAXIMUM FORWARD VOLTAGE DROP Vf (V)	at If (A)	at TEMP (°C)	MAX. REVERSE CURRENT Ir @25°C & Vr (A)	Ir at T & Vr (A)	TEMP T (°C)	TEST VOLT Vr (V)	AVALANCHE RATINGS MAX V BKDN. (V)	MIN SLOPE (A/V)	MAT.	DESCRIPTION DWG. No.
1▼	X25-5	5.0k	25m	25	3.0	8.0m		100A	10	25m	25	1.0u	40u	100	5.0k			Si	A1fc
2	1N4597	5 0k	.025	40	1.0 §			130A	5.0	25m	40A	.05u	.16m	130A	5.0k			Si	A1ek
3▼	HV25-5	5.0k	25m	40	3.0	8.0m		150A	12	25m	25	1.0u	40u	100	5.0k			Si△	A1td
4▼	HV25-5F	5.0k	25m	40	3 0	8.0m		125A	15	25m	25	2.0u	100u	100	5.0k			Si△	A1td
5	VF25-5	5.0k†	25m	40A	3.0			125A	12	25m	25	1.0u	40u	125A	5.0k			Si△	A83af
6	HV50G	5.0k	30m	25	20	8.0m	30		10	10m	25	2.0u	10m	100	5 0k			Si	A1fs
7	HV50E6	5 0k	40m	25	1 0	8 0m	25	125A	6.0	10m	25	20n	3.0u	100	5.0k			Si	A83g
8	MC200△	5 0k	04	25	1.2k	8.0m			6.0	.04	25	1.5u			5.0k			Si	A1hy
9	MC1051	5.0k	.04	25					7.0	.04	25	1.0u							A1gr
10	MC1051A	5.0k	.04	25					7 0	.04	25	.02u							A1gr
11	MC1052	5.0k	.04	25					10	.04	25	1.0u							A1gr
12	MC1052A	5.0k	04	25					10	04	25	.02u							A1gr
13	5L50	5 0k	05	25	10	8.3m		175	5.0	.05	25	5.0u	20m	100	5.0k			Si	A1kp
14	5L509	5.0k	.05	25	10	8 3m		175	5.0	.05	25	5.0u	.20m	100	5.0k	7.5k	200u	Si	A1kp
15▼	50K50	5.0k	50m	25	2.0	8.0m		150A	4.0	50m	25	1.0u	10u	100	5.0k			Si	DO7
16	7715-5	5.0k	05	25A	1 5	8.3m		125A	10	.05	25	1 0u	10m	125	5.0k			Si△	A1jb
17#	M505	5 0k	50m	25A	2.5	10m		150A	5.0	50m†	25A	1.0u	50u	100A	5.0k			Si△	DO7
18	MC051	5.0k	05	25A$				150A	5 0	.10	25A	1.0u			5.0k			Si	M54c
19	MC051A	5.0k	.05	25A$				150A	5.0	.10	25A	.02u			5.0k			Si	M54c
20	MC052	5.0k	.05	25A$				150A	10	.10	25A	1.0u			5.0k			Si	M54e
21	MC052A	5.0k	05	25A$				150A	10	10	25A	.02u			5.0k			Si	M54e
22	PS2425	5.0k	05	25A$					14	5m	25A	10u			5.0k			Si	A1hk
23▼	X50-5	5.0k	50m	25	3 0	8 0m		100A	10	50m	25	1.0u	40u	100	5 0k			Si	A1fc
24	VB50	5.0k	50m	40A	3.0	8.3m		150A	10	50m	25	50n	5.0u	100	5.0k			Si△	A1fc
25▼	50S50	5.0k	50m	55	2 0	8.3m	750m	150A	5.0	50m	25	1.0u	10u	100	5.0k			Si	A1df
26	1N1734A	5.0k	50m	175$	9 0	8 0m		200A	8.0	400m	25	1.0u	12u	150	5.0k			Si	A1gd
27	HV50E4	5.0k	60m	25	1.0	8.0m	25	125A	4.0	10m	25	20n	3.0u	100	5 0k			Si	A83f
28	1N1734	5.0k	.10	25A$	2 5	8.0m		150A	18	10	25A	10u	.10m	100A	5.0k			Si	A1jh
29	10L50	5.0k	10	25	20	8.3m		175	5.0	10	25	5 0u	.20m	100	5.0k			Si	A1kp
30	10L509	5.0k	.10	25	20	8.3m		175	5.0	10	25	5.0u	20m	100	5.0k	7.5k	200u	Si	A1kp
31	10R50B	5.0k	10	25	60			175	10	10	25	5 0u	.50m		5.0k			Si	
32#	HSC5	5.0k	10	25A$				150A	10	.10	25A	5.0u			5.0k			Si	A1kv
33	MHV5	5 0k	.10	25A$	3 5			125A	9.0	.10	25	1.0u			5.0k			Si	F8
34	PS1145	5 0k†	10	25A$	2 5 §	8.0m		175A	22	.10	25A							Si	A1jh
35	SE1734	5.0k	10	50A	3.0 §	10m		150A	15	.20	25	5.0u	75m	100	5.0k			Si	A1jh
36	1N5182	5.0k	10	55A	4 0 §	8.3m		175A	10	.10	55A		1.0m△	175A	5 0k			Si	A1fj
37▼	100S50	5.0k	100m	55	3 0	8.3m	750m	150A	5 0	100m	25	1.0u	10u	100	5.0k			Si	A1df
38	SC50∅	5.0k	100m	55$	4 0			175	10.5	100m	25	1.0u	20m	100	5.0k			Si	A1fg
39	SCE50	5 0k	10	55A	4 0			175	10 △	.10	25A	1.0u△	.02m△	100A	5 0k			Si	A1fh
40	JAN1N5182	5 0k	125m	25A	1 0	8.3m		175A	10	130m	25	1 0u	20u	100A	5 0k			Si	A1fk
41	15L50	5.0k	.15	25	20	8.3m		175	5.0	15	25	5.0u	20m	100	5.0k			Si	A1kp
42	15L509	5.0k	15	25	20	8.3m		175	5 0	.15	25	5.0u	.20m	100	5.0k	7.5k	200u	Si	A1kp
43	7701-5B	5 0k	.15	25	3 0	8.3m		125A	10	.05	25	1.0u	.10m	125	5.0k			Si△	A1jb
44	CLR5	5 0k	150m	25	10			100A	4.4 §△	150m†	25	2 0u△	100u	100	5.0k	6 0k∅		Si	A1hg
45	EK500	5.0k	.15	50	15	8.3m		150	6.0	.15	25	2.0u	.10m	100	5.0k			Si	DO27
46▼	HG5	5.0k	150m	55A	5 0	8.3		150A	8 0	100m	25A	5.0u	25	100A	5.0k			Si	A94j
47	SCE50A	5.0k	15	55A	6 0			175	6.0 △	.10	25A	1.0u△	.02m△	100A	5.0k			Si	A1fh
48	DICR5	5.0k	170m	50	10	8.3m		150S	9.0	170m	25	2 0u			5.0k			Si	A1dm
49	20L50	5.0k	20	25	20	8 3m		175	5 0	20	25	5.0u	20m	100	5.0k			Si	A1kp
50	20L509	5.0k	20	25	20	8.3m		175	5.0	20	25	5.0u	.20m	100	5 0k	7 5k	200u	Si	A1kp
51	550	5 0k	200m	25	20	8 0m		150	8 0	200m	25	2.0u			5.0k			Si△	A79c
52	CL5∅	5 0k	200m	25	10			125A	4.4 §△	200m†	25	1 0u△	50u	100	5 0k	6.0k∅		Si	A1hg
53	DI550	5.0k	20	25A$	20	8.0m		100A	8.0	20	25	2 0u			5 0k			Si	A79c
54	SLA05	5 0k	200m	25				150	5.0	1.0		6 0u	75u	100	5.0k			Si	A1dj
55	DER5	5 0k	200m	50	40	8.3m	2 0	150S	9.0	200m	25	2.0u	20u	125	5 0k			Si	A1dm
56▼	200S50	5 0k	200m	55	20	8 3m	1 0	150A	5 0	200m	25	1.0u	20u	100	5.0k			Si	A1tp
57	HVC500	5.0k	.20	55A	6.0			150	10	.20	25	10u			5 0k			Si	M291d
58	C5.0E6	5 0k	20	75	15	8 0m		150C	6.0	20		1 0u	.10m	100	5 0k			Si	A3s
59	CP129	5.0k	20	75					6 0		25								M84as
60	C5 0E5	5 0k	225	75	20	8.0m		150C	5.0	.23		1.0u	.10m	100	5 0k			Si	A3s
61♦	1N2918	5.0k	250m	25A				150S	10	250m	25A	500n			5 0k	7.0k		Si	M122c
62♦	1N2919	5 0k	250m	25A				150S	10	250m	25A	500n			5.0k	7.0k		Si	A83ax
63	25L50	5 0k	25	25	20	8 3m		175	5.0	.25	25	5.0u	.20m	100	5 0k			Si	A1kp
64	25L509	5 0k	.25	25	20	8.3m		175	5.0	25	25	5.0u	.20m	100	5.0k	7 5k	200u	Si	A1kp
65#	M50K	5 0k	250m	25A	2 0	10m		150A	8 0	250m†	25A	1 0u	50u	100A	5.0k			Si△	A83k
66	NTD05	5 0k$	.25	25A	10			125A	9.0 △	25	25A	1.0u△	.10m△	100A	5 0k			Si△	A1hm
67	SCBR50A	5.0k	25	30C	2 0			150										Si	M45e*
68	SLA05HF	5 0k	25	60	20	8 3m		150	8.0	30	50	5.0u	.20m	100	5 0k			Si	A134d
69	BH500	5 0k	250m	75A	20	8.3m		150A	4.0 △	250m	25A	10u△			5.0k			Si	DO27
70	MR996A	5.0k$	250m	75A	15 §			150J	1.7	250m	75A	10u	100u	75A	5.0k			Si	A1dt
71	30L50	5.0k	30	25	40	8 3m		175	5.0	30	25	5.0u	.20m	100	5.0k			Si	A1kp
72	30L509	5.0k	.30	25	40	8 3m		175	5 0	30	25	5.0u	.20m	100	5.0k	7.5k	200u	Si	A1kp
73	B223-50	5.0k	30	25	60			175A	2.5		150	5.0u	.50m	150A				Si	A1rx
74	PS1445	5 0k†	30	25A$				175A	12	30	25A		.05m	100A	5 0k			Si	F13b
75	SLDHV5	5.0k	30	25A	22			175A	9.0		25							Si	M239d
76	US50	5.0k	30	25	15	8 3m		150A	9.0	20	25	2 0u	.10m	100	5.0k			Si	A1gx
77	A1423PE4AC1	5.0k	300m	50A				150A	7.2	100m	25	5.0u	100u	150A	5.0k			Si	A83x
78	V1	5.0k	300m	65	15			100A	4.4 △	500m		5.0u△			5.0k				F51b
79#	HS30	5.0k	35	25A	30	10m		150A	14	35	25A	5.0u	.05m	100A	5.0k			Si	F12
80#	HS40A	5.0k	350m∅	25A	2 8 †			150A	13 5	350m	25A	5.0u	50u	100A	5.0k			Si△	F12
81	PS1852	5.0k	350m	25				200A	8 0	400m	25	1.0u	12u	150	5.0k			Si	A1jh
82#	HX30	5.0k	350m	35A	30	10m		150A	13 5	350m	25A	5.0u	55u	100A	5.0k			Si	A1mk
83	DI550LS	5.0k	35	50A	40	8.0m		125	7 5	35	25A	5.0u			5 0k			Si	C42c
84	40L50	5 0k	.40	25	40	8.3m		175	5.0	.40	25	5 0u	.20m	100	5.0k			Si	A1kp
85	40L509	5 0k	40	25	40	8.3m		175	5.0	40	25	5 0u	20m	100	5 0k	7.5k	200u	Si	A1kp
86	850C	5 0k	400m	25	50	8.0m		150	6.0	400m	25	5 0u	25u	100	5 0k			Si△	M519a
87	DI850C	5 0k	400m	40A	50	8.3m		150J	6.0	400m	25	5.0u	25u	100	5.0k			Si	C42m
88#	HSKE3500/1550-3	5 0k	400m	45A	55	8.0m	5 3k∅	150A	7.0	2 0	25J					10k∅		Si	A167f
89	50L50	5 0k	50	25	40	8.3m		175	5 0	.50	25	5.0u	20m	100	5.0k			Si	A1kp
90	50L509	5 0k	.50	25	40	8.3m		175	5 0	.50	25	5.0u	20m	100	5 0k	7 5k	200u	Si	A1kp
91	SCBR50	5 0k	.50	30C	20			150										Si	M45d*
92	KVF5	5 0k	500m	55A	50			175A	7.0 △	500m	25A	100n△	25u△	100A	5.0k			Si△	A83ag
93	SCH5000	5.0k	500m	55A	50			175	7 0 △	500m	25A	100n△	15u△	100A	5 0k			Si	A138c
94	PS2355	5 0k	53	25A$				175A	9 0	.20	25A	3.0u			5.0k			Si	M22
95	60L50	5 0k	60	25	40	8.3m		175	5.0	.60	25	5.0u	20m	100	5.0k			Si	A1kp
96	60L509	5 0k	.60	25	40	8.3m		175	5.0	.60	25	5.0u	20m	100	5.0k	7.5k	200u	Si	A1kp
97	CR105	5 0k	625m	60A	15			125A	4.8 ∅	630m	60A	600u△	300m∅	60A	5 0k			Si△	M100b∅
98#	HSKE3500/1550-5	5 0k	650m	45A	55	8 0m	5.3k∅	150A	6 0	3 0	25J					10k∅		Si	A167h
99	75R50B	5.0k	75	25	60			175	10	75	25	5.0u	.50m		5 0k			Si	
100	SLA05HC	5 0k	750m	75	50	8 3m		150A	6.0	1.0	25	5.0u	100u	100	5 0k			Si	A134d
101	80L50	5 0k	.80	25	60	8 3m		175	5.0	.80	25	5 0u	.20m	100	5.0k			Si	A1kp
102	80L509	5 0k	800m	25	60	8.3m		175	5 0	800m	25	5.0u	200u	100	5.0k	7.5k	200u	Si	A1kp
103	100L50	5.0k	1.0	25	60	8.3m		175	5.0	1.0	25	5.0u	.20m	100	5.0k			Si	A1kp
104	100L509	5 0k	1 0	25	60	8 3m		175	5 0	1 0	25	5 0u	20m	100	5.0k	7 5k	200u	Si	A1kp
105	100R50B	5 0k	1.0	25	60			175	10	1.0	25	5.0u	.50m		5.0k			Si	
106	SC1050	5.0k	1 0	40A$	200 §			175A	6 5	1 0	25A	800u	1 0m	100A	5 0k			Si	M280
107	KV05	5 0k	1 0	50A	50			150A	8 0 △	1.0	25A	2.0u△			5 0k			Si	M462
108	SLD5	5 0k	1 1	30A	50			125A	10.5	1 1	25A	10u			5.0k			Si△	M239d

SYMBOLS AND CODES EXPLAINED IN INTERPRETER

5. RECTIFIERS

IN ORDER OF (1) PIV, (2) MAX AVG FWD CURRENT (3) TEMPERATURE, and (4) TYPE No.

LINE No.	4 TYPE No.	1 PIV (V)	MAX AVG FWD DC CURRENT 2 Io (A)	3 at TEMP (°C)	MAX RATINGS @ 25°C SURGE CUR. PEAK 1 Cy (A)	PULSE WIDTH (s)	DISS. (W)	MAX. TEMP (°C)	MAXIMUM FORWARD VOLTAGE DROP Vf (V)	at If (A)	at TEMP (°C)	MAX. REVERSE CURRENT Ir @25°C & Vr (A)	Ir at T & Vr (A)	TEMP T (°C)	TEST VOLT Vr (V)	AVALANCHE RATINGS MAX V BKDN. (V)	MIN SLOPE (A/V)	MAT.	DESCRIPTION DWG. No.
1	KVP5	5 0k$	1 1	50A	50			150A	8 0 Δ	1.1	25A	5 0uΔ			5 0k			SiΔ	M239d
2	1N5595	5 0k	1 15	100C	30		2 5kØ	150C	7 4	1 1	100C		300u	100C	5 0k			Si	S221
3	BR850A†	5 0k	1 25	25	50	8.0m		150	8 00	75	25	5.0u			5 0k			SiΔ	M541
4	1N5600	5 0k	1 4	100C	100		9.1kØ	150C	7 4	1 4	100C		750u	100C	5.0k			Si	S221
5	150R50B	5 0k	1 5	25	60			175	10	1 5	25	5 0u	50m		5 0k			Si	
6	VC50	5.0k†	1 5	40C	50			125A	10	.10	25	1.0u	1 0m	125A	5.0k			SiΔ	M430
7#	HSKE3500/1550-1 2																		
		5 0k	1 5	45A	90	8.0m	10kØ	150A	8 0	8 0	25J					10kØ		Si	A167r
8	2ASLD5	5.0k	2.0	25A	200			175A	9 0		25							Si	M239d
9	200R50B	5 0k	2 0	25	60			175	10	2 0	25	5 0u	50m		5 0k			Si	
10♦	SCHS5000	5 0k	2.0	55	150			175A	10	1 0	25	10u	120u	100	5 0k			Si	A138x
11	250R50B	5.0k	2 5	25	250			175	10	2 5	25	10u	1.0m		5.0k			Si	
12#	HSKE3500/1550-2	5 0k	2 5	45A	90	8 0m	10kØ	150A	7 0	8 0	25J					10kØ		Si	A167u
13	CP128	5 0k	2 5	50					8 0		25								M84ar
14	300R50B	5.0k	3.0	25	250			175	10	3.0	25	10u	1.0m		5.0k			Si	
15	KHP5	5.0k	3 0	25A	300			175A	8.0		25A	5.0u			5.0k			SiΔ	M239w
16	SODSLD5	5 0k	3.0	30A	290			140A	8 0	3 0	25A	25u			5.0k			SiΔ	M239w
17	350R50B	5.0k	3.5	25	250			175	10	3 5	25	10u	1.0m		5.0k			Si	
18	1N5603	5 0k	3 5	100C	200		25kØ	150C	9 0	3 5	100C		1.0m	100C	5 0k			Si	S293
19	400R50B	5 0k	4.0	25	250			175	10	4 0	25	10u	1 0m		5.0k			Si	
20	UGB5	5 0k	4 4	75C				150A	9.0	22	25	5 0u						Si	S293
21	450R50B	5 0k	4 5	25	250			175	10	4 5	25	10u	1 0m		5.0k			Si	
22	UDE5	5.0k	4 5	75C				150A	10	22	25	10u						Si	S221
23	500R50B	5 0k	5.0	25	250			175	10	5.0	25	10u	1 0m		5.0k			Si	
24	550R50B	5.0k	5 5	25	250			175	10	5.0	25	10u	1 0m		5.0k			Si	
25	SCPH10	5 0k	5.5	55A	300			150A	10	3 0	25A	110u	200u	100A	5.0k			Si	M496
26	600R50B	5.0k	6 0	25	250			175	10	6 0	25	10u	1.0m		5.0k			Si	
27	SCPD20	5.0k	11	55A	300			150A	10	3.0	25A	110u	200u	100A	5.0k			Si	M496
28	SCPN20	5 0k	11	55A	300			150A	10	3 0	25A	110u	200u	100A	5 0k			Si	M496
29	SCPP20	5 0k	11	55A	300			150A	10	3 0	25A	110u	200u	100A	5.0k			Si	M496
30▼#	SiD500P50K62	5.0k	600	95B	7 1k	10m		175J	1 33	1.0k	150J		17m	175J	5.0k			Si	S369
31▼#	SiD500P52K62	5 2k	600	95B	7 1k	10m		175J	1 33	1.0k	150J		17m	175J	5.2k			Si	S369
32	A1423MH9AB1	5.4k	450m	50A				150A	8.1	100m	25	5.0u	100u	150A	5.4k			Si	M212c
33▼#	SiD500P54K62	5.4k	600	95B	7 1k	10m		175J	1 33	1 0k	150J		17m	175J	5.4k			Si	S369
34	HW5G	5 5k	01	150					8.0	01	25	2.0u			5.0k			Si	A1gk
35	2L55	5 5k	02	25	10	8.3m		175	6.0	02	25	5.0u	.20m	100	5.5k			Si	A1ks
36	2L559	5.5k	20m	25	10	8 3m		175	6.0	20m	25	5.0u	200u	100	5.5k	8.2k	200u	Si	A1ks
37	5L55	5 5k	.05	25	10	8 3m		175	6 0	05	25	5 0u	20m	100	5.5k			Si	A1ks
38	5L559	5.5k	50m	25	10	8 3m		175	6.0	50m	25	5.0u	200u	100	5.5k	8.2k	200u	Si	A1ks
39	10L55	5 5k	10	25	20	8 3m		175	6 0	10	25	5 0u	20m	100	5.5k			Si	A1ks
40	10L559	5 5k	100m	25	20	8 3m		175	6.0	100m	25	5.0u	200u	100	5.5k	8.2k	200u	Si	A1ks
41	15L55	5 5k	15	25	20	8.3m		175	6.0	15	25	5.0u	.20m	100	5.5k			Si	A1ks
42	15L559	5 5k	150m	25	20	8 3m		175	6.0	150m	25	5.0u	200u	100	5.5k	8 2k	200u	Si	A1ks
43	20L55	5.5k	20	25	20	8.3m		175	6.0	.20	25	5.0u	20m	100	5.5k			Si	A1ks
44	20L559	5.5k	200m	25	20	8 3m		175	6.0	200m	25	5 0u	200u	100	5 5k	8 2k	200u	Si	A1ks
45♦	1N2920	5 5k	250m	25A				150S	11	250m	25A	500n			5.5k	7 7k		Si	M122d
46♦	1N2921	5.5k	250m	25A				150S	11	250m	25A	500n			5.5k	7.7k		Si	A83bd
47	25L55	5.5k	.25	25	20	8 3m		175	6.0	25	25	5.0u	.20m	100	5.5k			Si	A1ks
48	25L559	5.5k	250m	25	20	8.3m		175	6 0	250m	25	5 0u	200u	100	5.5k	8 2k	200u	Si	A1ks
49	30L55	5.5k	.30	25	40	8 3m		175	6 0	.30	25	5.0u	.20m	100	5.5k			Si	A1ks
50	30L559	5.5k	300m	25	40	8 3m		175	6.0	300m	25	5 0u	200u	100	5.5k	8.2k	200u	Si	A1ks
51	40L55	5.5k	.40	25	40	8.3m		175	6.0	.40	25	5 0u	.20m	100	5.5k			Si	A1ks
52	40L559	5 5k	400m	25	40	8.3m		175	6.0	400m	25	5 0u	200u	100	5.5k	8 2k	200u	Si	A1ks
53	50L55	5.5k	.50	25	40	8.3m		175	6.0	50	25	5.0u	.20m	100	5.5k			Si	A1ks
54	50L559	5 5k	500m	25	40	8 3m		175	6.0	500m	25	5 0u	200u	100	5.5k	8.2k	200u	Si	A1ks
55	60L55	5 5k	60	25	40	8.3m		175	6 0	.60	25	5 0u	.20m	100	5 5k			Si	A1ks
56	60L559	5 5k	600m	25	40	8 3m		175	6 0	600m	25	5.0u	200u	100	5.5k	8.2k	200u	Si	A1ks
57	80L55	5 5k	.80	25	60	8.3m		175	6.0	.80	25	5 0u	.20m	100	5.5k			Si	A1ks
58	80L559	5.5k	800m	25	60	8.3m		175	6.0	800m	25	5 0u	200u	100	5.5k	8.2k	200u	Si	A1ks
59	100L55	5 5k	1 0	25	60	8 3m		175	6 0	1 0	25	5.0u	.20m	100	5.5k			Si	A1ks
60	100L559	5 5k	1 0	25	60	8 3m		175	6.0	1 0	25	5.0u	200u	100	5.5k	8.2k	200u	Si	A1ks
61#	6RM56	5 6k	1 5	55A	150	10m		125A	8.0	1.5	25A	100u			5.6k			Si	M62e
62#	P56H	5.6k	2 0	55A	230	10m		125A	8 8	2.0 †	25	100u			5.6k			SiΔ	M267
63▼#	SiD500P56K62	5 6k	600	95B	7 1k	10m		175J	1.33	1.0k	150J		17m	175J	5 6k			Si	S369
64▼#	SiD500P58K62	5.8k	600	95B	7 1k	10m		175J	1.33	1.0k	150J		17m	175J	5 8k			Si	S369
65	MH412	6 0k	.01	25					7 0	01	25	.50u	.05m	100	6 0k			Si	A1at
66▼	X10-6	6 0k	10m	25	3 0	8 0m		100A	10	10m	25	1.0u	40u	100	6.0k			Si	A1fc
67	SCM60	6 0k	10m	55A	2 0	8 3m		150A	15	10m	25A	100nΔ	2.0uΔ	100A	6.0k			Si	A1fh
68	2L60	6.0k	.02	25	10	8.3m		175	6 0	02	25	5.0u	20m	100	6.0k			Si	A1ks
69	2L609	6.0k	.02	25	10	8 3m		175	6 0	02	25	5.0u	.20m	100	6 0k	9.0k	200u	Si	A1ks
70	MC203Δ	6 0k	.02	25	75	8.0m			10	.02	25	1.5u			6 0k			Si	A1hy
71▼	SP6	6.0k	20m	25	3 0	8 3m	500m	150A	12	20m	25	500n	10u	100	6.0k			Si	A267e
72	MC1062	6.0k	.025	25					12	03	25	1.0u							A1kd
73	MC1062A	6.0k	025	25					12	.03	25	02u							A1kd
74▼	X25-6	6.0k	25m	25	3 0	8 0m		100A	10	25m	25	1.0u	40u	100	6 0k			Si	A1fc
75	HV60G	6 0k	30m	25	20	8 0m	30		10	10m	25	2.0u	10m	100	6.0k			Si	A1fs
76#	SH6K	6 0k	03	70A	5 0	10m		100S	10	.03	25A	10u	10m	100A	6 0k			Si	A168d
77	MC1061	6.0k	035	25					8.0	.04	25	1.0u							A1gr
78	MC1061A	6 0k	.035	25					8.0	04	25	.02u							A1gr
79	HV60E6	6.0k	40m	25	1 0	8.0m	.25	125A	6 0	10m	25	20n	3.0u	100	6.0k			Si	A83g
80	MC202Δ	6.0k	04	25	1 2k	8 0m			8 0	.04	25	1.5u			6 0k			Si	A1hy
81	5L60	6.0k	05	25	10	8.3m		175	6 0	.05	25	5.0u	.20m	100	6.0k			Si	A1ks
82	5L609	6.0k	.05	25	10	8.3m		175	6 0	.05	25	5.0u	20m	100	6.0k	9.0k	200u	Si	A1ks
83	7715-6	6.0k	.05	25A	1 5	8.3m		125A	12	.05	25	1.0u	.10m	125	6.0k			SiΔ	A1jb
84#	M60H	6 0k	50m	25A	2 5	10m		125A	6.0	50m	25A	1.0u	25u	100A	6 0k			SiΔ	A1mn
85#	M605	6.0k	50m	25A	2 5	10m		150A	6 0	50m†	25A	1.0u	50u	100A	6.0k			SiΔ	D07
86	MC061	6 0k	05	25A$				150A	6.0	.10	25A	1.0u			6.0k			Si	M54c
87	MC061A	6 0k	05	25A$				150A	6.0	.10	25A	.02u			6.0k			Si	M54c
88	MC062	6 0k	.05	25A$				150A	12	.10	25A	1.0u			6.0k			Si	M54g
89	MC062A	6.0k	.05	25A$				150A	12	.10	25A	.02u			6 0k			Si	M54g
90	PS2426	6.0k	.05	25A$					16	5m	25A	10u			6 0k			Si	A1hk
91▼	X50-6	6.0k	50m	25	3 0	8 0m		100A	10	50m	25	1 0u	40u	100	6.0k			Si	A1fc
92	VB60	6.0k	50m	40A	3 0	8.3m		150A	10	50m	25	50n	5.0u	100	6.0k			SiΔ	A1fc
93	1N1143	6.0k	.05	75	3 5	5 0m		170	45	57m	50		.20m	50	6.0k			Si	F57f
94	1N2380	6.0k	.05	100A	12	8.3m		150A	22.5	.05	100A		100m	100A	600			Si	A1nf
95	LA60	6.0k	06	40A	5.0	10m		100	8 0	25m	25A	5 0u			6.0k			SiΔ	A1hf
96	1N1143A	6.0k	.065	75	3.5	5 0m		170	30	75m	50		.20m	50	6.0k			Si	F57g
97	P1RP60	6.0k	07	75A$	15			150S	21	.07	25	2 0u			6.0k			Si	A1np
98	1N2383	6.0k†	.10	25A$	6 0	8.0m		150A	27	10	25A	10u	.10m	100A	6.0k			Si	A1kv
99	10L60	6.0k	.10	25	20	8 3m		175	6.0	.10	25	5.0u	20m	100	6.0k			Si	A1ks
100	10L609	6.0k	.10	25	20	8.3m		175	6.0	10	25	5.0u	20m	100	6.0k	9.0k	200u	Si	A1ks
101	7701-6A	6.0k	.10	25	3 0	8.3m		125A	11	.05	25	1 0u	10m	125	6.0k			SiΔ	A1jb
102#	HSC6	6.0k	.10	25A$				150A	12	10	25A	5.0u			6.0k			Si	A1kv
103	MHV6	6 0k	.10	25A$	3.5			125A	9.0	.10	25	1.0u			6.0k			Si	F8
104	PS1146	6.0k†	.10	25A$	2.5 §	8.0m		175A	31.5	10	25A							Si	A1kv
105	1N4505	6.0k	.10	50A	20 §			125A	8.5	10	50A		.15m	125A	6.0k			Si	A1sr
106	SE2383	6.0k	.10	50A	3.0 §	10m		150A	20	.20	25	5.0u	75m	100	6.0k			Si	A1jg
107	1N5329	6 0k	135m	40A	10			150A	15.4	75m	100A		150u	100A	6.0k			Si	A1gx
108	1N3711	6.0k	.15	25A$	5 0			150A	8.0	.15	25A		.00	25A	6.0k				A1pn
109	15L60	6.0k	150m	25	20	8.3m		175	6 0	150m	25	5.0u	200u	100	6.0k			Si	A1ks

SYMBOLS AND CODES EXPLAINED IN INTERPRETER

5. RECTIFIERS

IN ORDER OF (1) PIV, (2) MAX AVG FWD CURRENT (3) TEMPERATURE, and (4) TYPE No.

LINE No.	TYPE No.	1 PIV (V)	MAX AVG FWD DC CURRENT 2 Io (A)	3 at TEMP (°C)	MAX RATINGS @ 25°C SURGE CUR. PEAK 1 Cy (A)	PULSE WIDTH (s)	DISS. (W)	MAX. TEMP (°C)	MAXIMUM FORWARD VOLTAGE DROP Vf (V)	at If (A)	at TEMP (°C)	MAX. REVERSE CURRENT Ir @25°C & Vr (A)	Ir at T & Vr (A)	TEMP T (°C)	TEST VOLT Vr (V)	AVALANCHE RATINGS MAX V BKDN. (V)	MIN SLOPE (A/V)	MAT.	DESCRIPTION DWG. No.
1	15L609	6 0k	.15	25	20	8.3m		175	6 0	15	25	5 0u	20m	100	6 0k	9 0k	200u	Si	A1ks
2	DICR6	6 0k	150m	50	10	8 3m		150S	10	150m	25	2 0u			6.0k			Si	A1dm
3	EK600	6 0k	.15	50	15	8 3m		150	6.0	15	25	2 0u	10m	100	6 0k			Si	DO27
4	HVC600	6 0k	.15	55A	4 5			150	12	.15	25	10u			6 0k			Si	M291e
5#	HS50	6 0k	175	25A	5 0	10m	2 6	150J	14	.18	25A	5.0u	.05m	100A	6 0k			Si	A1ns
6	20L60	6 0k	.20	25	20	8 3m		175	6.0	20	25	5 0u	20m	100	6 0k			Si	A1ks
7	20L609	6.0k	20	25	20	8 3m		175	6 0	20	25	5 0u	20m	100	6.0k	9 0k	200u	Si	A1ks
8	560	6 0k	200m	25	20	8 0m		150	15	200m	25	2 0u			6 0k			Si△	A79d
9	B223-60	6 0k	.20	25	60			175A	3.0		150	5 0u	.50m	150A				Si	A1rx
10	DI560	6 0k	.20	25A$	20	8.0m		100A	15	20	25	2.0u			6 0k			Si	A79d
11#	ME60	6 0k	.20	25A	1 5	10m		100A	12	.20 †	25	.01u			6 0k			Si△	A1km
12	SLA06	6 0k	200m	25				150	6 0	500m		6.0u	75u	100	6.0k			Si	A1dj
13	US60	6.0k	.20	25	15	8 3m		150A	10	20	25	2 0u	10m	100	6 0k			Si	A1gx
14	DER6	6.0k	200m	50	40	8 3m	2 0	150S	10	200m	25	2 0u	20u	125	6 0k			Si	A1dm
15	C6 0E6	6 0k	20	75	15	8 0m		150C	6 0	20		1 0u	10m	100	6.0k			Si	A3s
16	CP130	6 0k	20	75					8 0		25								M84at
17	A1425PBH5AB1	6 0k	230m	50A				150A	9 0	100m	25	5 0u	100u	150A	6 0k			Si	A1jc
18♦	1N2922	6 0k	250m	25A				150S	12	250m	25A	500n			6 0k	8 4k		Si	M122d
19♦	1N2923	6 0k	250m	25A				150S	12	250m	25A	500n			6.0k	8.4k		Si	A83bd
20	25L60	6 0k	25	25	20	8.3m		175	6.0	25	25	5 0u	20m	100	6.0k			Si	A1ks
21	25L609	6 0k	25	25	20	8.3m		175	6.0	.25	25	5.0u	20m	100	6.0k	9 0k	200u	Si	A1ks
22#	M60K	6 0k	250m	25A	2 0	10m		150A	10	250m†	25A	1 0u	50u	100A	6.0k			Si△	A83k
23	NTD06	6 0k$	25	25A	10			125A	9 0 △	25	25A	1 0u△	.10m△	100A	6.0k			Si△	A1hm
24	A1423PBH5AB1	6.0k	260m	50A				150A	9.0	100m	25	5 0u	100u	150A	6 0k			Si	M212
25	1N1755	6 0k	29	75C$	6 0			150	45	50	25	25u			6 0k			Si	F12t
26	30L60	6.0k	.30	25	40	8.3m		175	6 0	30	25	5 0u	20m	100	6 0k			Si	A1ks
27	30L609	6 0k	.30	25	40	8 3m		175	6 0	.30	25	5.0u	20m	100	6 0k	9 0k	200u	Si	A1ks
28	PS1446	6 0k†	.30	25A$				175A	12	30	25A		05m	100A	6.0k			Si	F13b
29	SLDHV6	6 0k	30	25A	22			175A	12		25							Si	M239d
30	A1423PM4AC1	6 0k	300m	50A				150A	7 2	100m	25	5.0u	100u	150A	6.0k			Si	A83x
31	DI560LS	6 0k	.30	50A	40	8.0m		125	8 4	30	25A	5 0u			6.0k			Si	C42c
32#	ED03	6 0k	.30	50	45	10		125	6 0	30	25	1 0			6 0k	6.1k		Si	A83as
33	CR206	6 0k	.30	60A	9.0			125A	6 0 ∅	.30	60A	10u△	10m⊠	100	6.0k			Si△	A83s ∅
34	A1423PBC5AB1	6 0k	320m	50A				150A	9 0	100m	25	5 0u	100u	150A	6.0k			Si	M205m
35	A1425MH10AB1	6 0k	340m	50A				150A	9 0	100m	25	5 0u	100u	150A	6.0k			Si	A1jd
36	JAN1N1734A	6 0k	350m	25A	6 0	8.3m		150A	9 9 †	1 1	25	100u	12u	150A	6.0k			Si	A1ju
37	1N2383A	6 0k	350m	25A$	9 0	8 0m		200A	9 0	400m	25	1 0u	12u	150	6 0k	10k		Si	A1gd
38	PS1853	6 0k	350m	25				200A	9 0	400m	25	1 0u	12u	150	6 0k	10k		Si	A1kn
39	1N1756	6 0k	36	75C$	6 0			150	30	.60	25	25u			6.0k			Si	F12t
40	A1423MH10AB1	6 0k	390m	50A				150A	9 0	100m	25	5 0u	100u	150A	6.0k			Si	M212c
41	40L60	6 0k	.40	25	40	8 3m		175	6 0	.40	25	5 0u	20m	100	6 0k			Si	A1ks
42	40L609	6 0k	.40	25	40	8 3m		175	6 0	40	25	5 0u	20m	100	6 0k	9 0k	200u	Si	A1ks
43	860C	6 0k	400m	25	50	8 0m		150	8 0	400m	25	5 0u	25u	100	6.0k			Si△	M519b
44	DI860C	6 0k	400m	40A	50	8.3m		150J	8 0	400m	25	5 0u	25u	100	6 0k			Si	C42n
45	PS2356	6 0k	.48	25A$				175A	10	20	25A	3 0u			6.0k			Si	M22
46	50L60	6 0k	.50	25	40	8 3m		175	6 0	50	25	5 0u	.20m	100	6 0k			Si	A1ks
47	50L609	6 0k	.50	25	40	8.3m		175	6 0	50	25	5.0u	20m	100	6.0k	9 0k	200u	Si	A1ks
48#	D60H	6 0k	500m	25A	30	10m		100A	10	500m†	25A	1.0u						Si△	M62
49#	D60HL	6 0k	500m	25A	30	10m		100A	10	500m†	25A	1.0u						Si△	M62
50#	ED05	6 0k	.50	50	45	10		125	6 0	50	25	1.0			6 0k	6 1k		Si	A83at
51	CR106	6 0k	575	60A	15			125A	6 0 ∅	.58	60A	600u△	30m⊠	60A	6 0k			Si△	M100c∅
52	60L60	6 0k	.60	25	40	8 3m		175	6 0	.60	25	5 0u	20m	100	6.0k			Si	A1ks
53	60L609	6 0k	.60	25	40	8 3m		175	6 0	60	25	5.0u	20m	100	6 0k	9.0k	200u	Si	A1ks
54	80L60	6.0k	.80	25	60	8 3m		175	6 0	80	25	5.0u	20m	100	6 0k			Si	A1ks
55	80L609	6 0k	.80	25	60	8 3m		175	6.0	80	25	5.0u	20m	100	6.0k	9.0k	200u	Si	A1ks
56	100L60	6.0k	1.0	25	60	8.3m		175	6 0	1 0	25	5.0u	20m	100	6 0k			Si	A1ks
57	100L609	6 0k	1.0	25	60	8.3m		175	6 0	1 0	25	5 0u	20m	100	6 0k	9.0k	200u	Si	A1ks
58	SLD6	6 0k	1.0	30A	50			125A	13	1 0	25A	10u			6.0k			Si△	M239d
59	KVP6	6 0k$	1.0	50A	50			150A	9 0 △	1 0	25A	5.0u△			6 0k			Si△	M239d
60	BR860A†	6 0k	1.25	25	50	8 0m		150	10 0	75	25	5.0u			6 0k			Si△	M541
61#	1S150R06	6.0k	1.5	25	80	10m		150A	10 †	5 0	25	2.0u	05m	100	6 0k			Si	M398
62	VC60	6 0k†	1.5	40C	50			125A	12	10	25	1 0u	1 0m	125A	6.0k			Si△	M430
63	2ASLD6	6 0k	1.8	25A	200			175A	10		25							Si	M239d
64	KHP6	6 0k	2.75	25A	300			175A	9 0		25A	5 0u			6 0k			Si△	M239x
65	SODSLD6	6 0k	2 75	30A	290			140A	10	2 8	25A	25u			6 0k			Si△	M239x
66	CR304	6 0k†	5 0	50A	250	8 3m		125A	13.5	50	25A	2 0m	2 0m	125A	6.0k			Si△	M503c
67	SCPH12	6 0k	5 5	55A	300			150A	12	3 0	25A	110u	200u	100A	6 0k			Si	M496
68	CR314	6.0k†	9 0	50A	250	8 3m		125A	13 5	50	25A	2 0m	2 0m	125A	6.0k			Si△	M503c
69	SCPD24	6 0k	11	55A	300			150A	12	3 0	25A	110u	200u	100A	6.0k			Si	M496
70	SCPN24	6.0k	11	55A	300			150A	12	3 0	25A	110u	200u	100A	6.0k			Si	M496
71	SCPP24	6 0k	11	55A	300			150A	12	3.0	25A	110u	200u	100A	6 0k			Si	M496
72	CR324	6 0k†	12	50A	400	8 3m		125A	14 2	90	25A	2.0m	2.0m	125A	6 0k			Si△	M503j
73	CR334	6 0k†	17	50A	400	8 3m		125A	14 2	90	25A	2 0m	2 0m	125A	6.0k			Si△	M503j
74	CR344	6.0k†	23	50A	850	8 3m		125A	14 4	120	25A	2 0m	2.0m	125A	6.0k			Si△	M503o
75	CR354	6.0k†	35	50A	850	8 3m		125A	14 4	120	25A	2 0m	2.0m	125A	6.0k			Si△	M503o
76▼#	SiD300P60K62	6.0k	600	95B	7.1k	10m		175J	1.33	1.0k	150J		17m	175J	6 0k			Si	S368
77#	6RM64	6.4k	1 5	55A	150	10m		125A	8.0	1.5	25A	100u			6.4k			Si	M62e
78#	P64H	6 4k	2 0	55A	230	10m		125A	8.8	2.0 †	25	100u			6 4k			Si△	M267
79	HW6G	6 5k	.01	150					8 0	.01	25	2 0u			6 0k			Si	A1gk
80	2L65	6 5k	02	25	10	8 3m		175	7.0	02	25	5.0u	20m	100	6.5k			Si	A1md
81	2L659	6.5k	20m	25	10	8 3m		175	7.0	20m	25	5.0u	200u	100	6.5k	9.7k	200u	Si	A1md
82	5L65	6 5k	05	25	10	8.3m		175	7.0	05	25	5.0u	20m	100	6 5k			Si	A1md
83	5L659	6.5k	50m	25	10	8 3m		175	7 0	50m	25	5 0u	200u	100	6.5k	9.7k	200u	Si	A1md
84	10L65	6 5k	10	25	20	8.3m		175	7 0	10	25	5.0u	.20m	100	6 5k			Si	A1md
85	10L659	6 5k	100m	25	20	8.3m		175	7.0	100m	25	5 0u	200u	100	6.5k	9 7k	200u	Si	A1md
86	15L65	6.5k	15	25	20	8.3m		175	7.0	15	25	5.0u	.20m	100	6 5k			Si	A1md
87	15L659	6 5k	150m	25	20	8 3m		175	7 0	150m	25	5.0u	200u	100	6 5k	9 7k	200u	Si	A1md
88	HVC650	6.5k	15	55A	4.5			150	13	15	25	10u			6.5k			Si	M291f
89	20L65	6.5k	.20	25	20	8.3m		175	7 0	20	25	5.0u	20m	100	6 5k			Si	A1md
90	20L659	6.5k	200m	25	20	8 3m		175	7.0	200m	25	5.0u	200u	100	6 5k	9 7k	200u	Si	A1md
91♦	1N2924	6 5k	250m	25A				150S	13	250m	25A	500n			6 5k	9 1k		Si	M122d
92♦	1N2925	6 5k	250m	25A				150S	13	250m	25A	500n			6.5k	9.1k		Si	A83bd
93	25L65	6 5k	25	25	20	8 3m		175	7.0	.25	25	5.0u	.20m	100	6 5k			Si	A1md
94	25L659	6 5k	250m	25	20	8.3m		175	7 0	250m	25	5 0u	200u	100	6.5k	9 7k	200u	Si	A1md
95	30L65	6 5k	30	25	40	8 3m		175	7 0	30	25	5.0u	.20m	100	6.5k			Si	A1md
96	30L659	6 5k	300m	25	40	8 3m		175	7.0	300m	25	5.0u	200u	100	6.5k	9 7k	200u	Si	A1md
97	40L65	6 5k	40	25	40	8 3m		175	7.0	.40	25	5.0u	.20m	100	6.5k			Si	A1md
98	40L659	6 5k	400m	25	40	8.3m		175	7.0	400m	25	5 0u	200u	100	6.5k	9.7k	200u	Si	A1md
99	50L65	6.5k	50	25	40	8 3m		175	7 0	50	25	5.0u	.20m	100	6 5k			Si	A1md
100	50L659	6.5k	500m	25	40	8.3m		175	7.0	500m	25	5.0u	200u	100	6.5k	9 7k	200u	Si	A1md
101	60L65	6.5k	.60	25	40	8.3m		175	7.0	.60	25	5.0u	.20m	100	6.5k			Si	A1md
102	60L659	6 5k	600m	25	40	8 3m		175	7.0	600m	25	5.0u	200u	100	6.5k	9.7k	200u	Si	A1md
103	80L65	6 5k	80	25	60	8 3m		175	7 0	80	25	5.0u	.20m	100	6.5k			Si	A1md
104	80L659	6 5k	800m	25	60	8.3m		175	7.0	800m	25	5.0u	200u	100	6.5k	9 7k	200u	Si	A1md
105	100L65	6.5k	1.0	25	60	8.3m		175	7 0	1 0	25	5 0u	.20m	100	6.5k			Si	A1md
106	100L659	6.5k	1.0	25	60	8.3m		175	7 0	1.0	25	5.0u	200u	100	6.5k	9 7k	200u	Si	A1md
107	A1423MH11AB1	6 6k	390m	50A				150A	9 9	100m	25	5.0u	100u	150A	6 6k			Si	M212c
108	1N1698	6 6k	.62	75A$	3 5			160A	33 ∅	.10		25u△			6 6k			Si	F12t
109▼	HV5-7	7.0k	5.0m	40	3 0	8 0m		150A	12	5 0m	25	1.0u	40u	100	7.0k			Si△	A1td
110▼	HV5-7F	7.0k	5.0m	40	3 0	8 0m		125A	15	5.0m	25	2.0u	100u	100	7.0k			Si△	A1td

SYMBOLS AND CODES EXPLAINED IN INTERPRETER

5. RECTIFIERS

IN ORDER OF (1) PIV, (2) MAX AVG FWD CURRENT (3) TEMPERATURE, and (4) TYPE No.

LINE No.	4 TYPE No.	1 PIV (V)	MAX AVG FWD DC CURRENT 2 Io (A)	3 at TEMP (°C)	MAX RATINGS @ 25°C SURGE CUR. PEAK 1 Cy (A)	PULSE WIDTH (s)	DISS. (W)	MAX TEMP (°C)	MAXIMUM FORWARD VOLTAGE DROP Vf (V)	at If (A)	at TEMP (°C)	MAX. REVERSE CURRENT Ir @25°C & Vr (A)	Ir at T & Vr (A)	TEMP T (°C)	AVALANCHE RATINGS TEST VOLT Vr (V)	MAX V BKDN. (V)	MIN SLOPE (A/V)	MAT.	DESCRIPTION DWG. No.
1	VF5-7	7 0k†	5.0m	40A	3 0			125A	12	5.0m	25	1.0u	40u	125A	7.0k			Si△	A83af
2▼	X10-7	7.0k	10m	25	3.0	8.0m		100A	10	10m	25	1.0u	40u	100	7.0k			Si	A1fc
3▼	HV10-7	7 0k	10m	40	3 0	8.0m		150A	12	10m	25	1.0u	40u	100	7.0k			Si△	A1td
4▼	HV10-7F	7.0k	10m	40	3.0	8 0m		125A	15	10m	25	2.0u	100u	100	7.0k			Si△	A1td
5	VF10-7	7.0k†	01	40A	3.0			125A	12	.01	25	1.0u	04m	125A	7.0k			Si△	A83af
6	SCM70	7.0k	10m	55A	2 0	8.3m		150A	15	10m	25A	100n△	2.0u△	100A	7.0k			Si	A1fh
7	VG7	7.0k†	15m	40A	3.0			125A	14	15m	25	1.0u	40u	125A	7.0k			Si△	A83t
8	2L70	7 0k	20m	25	10	8.3m		175	7.0	20m	25	5 0u	200u	100	7.0k			Si	A1md
9	2L709	7.0k	20m	25	10	8.3m		175	7.0	20m	25	5.0u	200u	100	7.0k	10k	200u	Si	A1md
10	MC205△	7.0k	.02	25	75	8.0m			12	.02	25	1.5u			7.0k			Si	A1hy
11▼	SP7	7.0k	20m	25	3.0	8.3m	500m	150A	12	20m	25	500n	10u	100	7.0k			Si	A267e
12▼	X25-7	7.0k	25m	25	3 0	8.0m		100A	10	25m	25	1.0u	40u	100	7.0k			Si	A1fc
13▼	HV25-7	7 0k	25m	40	3.0	8.0m		150A	12	25m	25	1.0u	40u	100	7.0k			Si△	A1td
14▼	HV25-7F	7.0k	25m	40	3 0	8.0m		125A	15	25m	25	2.0u	100u	100	7.0k			Si△	A1td
15	VF25-7	7 0k†	25m	40A	3.0			125A	12	25m	25	1.0u	40m	125A	7.0k			Si△	A83af
16	HV70G	7.0k	30m	25	20	8.0m	30		10	10m	25	2.0u	10m	100	7.0k			Si	A1fs
17	HV70E6	7.0k	40m	25	1 0	8.0m	25	125A	6.0	10m	25	20n	3.0u	100	7.0k			Si	A83g
18	MC204	7.0k	.04	25	1.2k	8.0m			9.0	04	25	1.5u			7.0k			Si	A1hy
19	5L70	7.0k	.05	25	10	8.3m		175	7.0	.05	25	5.0u	.20m	100	7.0k			Si	A1md
20	5L709	7 0k	50m	25	10	8.3m		175	7 0	50m	25	5.0u	200u	100	7.0k	10k	200u	Si	A1md
21	7715-7	7.0k	.05	25A	1 5	8.3m		125A	14	.05	25	1.0u	10m	125	7.0k			Si△	A1jb
22	PS2427	7.0k	.05	25A$					18	5m	25A	10u			7.0k			Si	A1hk
23▼	X50-7	7 0k	50m	25	3.0	8.0m		100A	10	50m	25	1.0u	40u	100	7.0k			Si	A1fc
24	10L70	7.0k	.10	25	20	8.3m		175	7.0	.10	25	5.0u	20m	100	7.0k			Si	A1md
25	10L709	7.0k	100m	25	20	8.3m		175	7.0	100m	25	5.0u	200u	100	7.0k	10k	200u	Si	A1md
26	7701-7A	7.0k	.10	25	3.0	8.3m		125A	12	.05	25	1.0u	.10m	125	7.0k			Si△	A1jb
27#	HSC7	7.0k	10	25A$				150A	14	.10	25A	5.0u			7.0k			Si	A1mu
28	MHV7	7 0k	.10	25A$	2.0			125A	13.5	10	25	1.0u			7.0k			Si	F8
29	DICR7	7.0k	130m	50	10	8.3m		150S	12	130m	25	2.0u			7.0k			Si	A1nj
30	15L70	7.0k	.15	25	20	8.3m		175	7.0	.15	25	5.0u	.20m	100	7.0k			Si	A1md
31	15L709	7.0k	150m	25	20	8.3m		175	7 0	150m	25	5.0u	200u	100	7.0k	10k	200u	Si	A1md
32#	E1500C110S	7.0k	165m∅	45A	40 §	10m		120J	6.0	450m	25J	1.0u		25J	7.0k			Si	
33	DER7	7.0k	175m	50	30	8.3m	2 5	150S	12	175m	25	2.0u	20u	125	7.0k			Si	A1nj
34	20L70	7 0k	20	25	20	8.3m		175	7.0	.20	25	5.0u	.20m	100	7.0k			Si	A1md
35	20L709	7.0k	200m	25	20	8.3m		175	7.0	200m	25	5.0u	200u	100	7.0k	10k	200u	Si	A1md
36	570	7.0k	200m	25	20	8 0m		150	15	200m	25	2.0u			7.0k			Si△	A79d
37	US70	7.0k	20	25	15	8.3m		150A	12	.20	25	2 0u	.10m	100	7.0k			Si	A1gx
38	25L70	7 0k	.25	25	20	8.3m		175	7.0	.25	25	5.0u	.20m	100	7.0k			Si	A1md
39	25L709	7 0k	250m	25	20	8.3m		175	7.0	250m	25	5.0u	200u	100	7.0k	10k	200u	Si	A1md
40	DI570LS	7.0k	.25	50A	40	8.0m		125	10	.25	25A	5.0u			7.0k			Si	C42c
41	30L70	7 0k	30	25	40	8.3m		175	7.0	.30	25	5 0u	20m	100	7.0k			Si	A1md
42	30L709	7.0k	300m	25	40	8 3m		175	7.0	300m	25	5.0u	200u	100	7.0k	10k	200u	Si	A1md
43	870C	7.0k	300m	25	50	8.0m		150	10	300m	25	5 0u	25u	100	7.0k			Si△	M519b
44	DI570	7.0k	.30	25A	20	8 0m		100A	15	20	25	2 0u			7.0k			Si	A79d
45	PS1447	7.0k†	.30	25A$				175A	17	.25	25A		.05m	100A	7.0k			Si	F13c
46	SLDHV7	7 0k	.30	25A	22			175A	15		25							Si	M239e
47	T7KV	7.0k	.30	25A				125A							7 0k			Si	
48	DI870C	7.0k	.30	40A	50	8 3m		150J	10	30	25	5.0u	.02		7.0k			Si	C42n
49	CP131	7.0k	30	75					12		25								M84au
50	S5343	7.0k	30	100A				100A	16			2.0m			7.0k			Si	M123
51	40L70	7.0k	.40	25	40	8.3m		175	7.0	40	25	5.0u	.20m	100	7.0k			Si	A1md
52	40L709	7.0k	400m	25	40	8.3m		175	7.0	400m	25	5.0u	200u	100	7 0k	10k	200u	Si	A1md
53	PS2357	7.0k	.43	25A$				175A	12	20	25A	3 0u			7 0k			Si	M22
54	50L70	7.0k	.50	25	40	8.3m		175	7.0	.50	25	5.0u	.20m	100	7.0k			Si	A1md
55	50L709	7 0k	500m	25	40	8.3m		175	7.0	500m	25	5.0u	200u	100	7.0k	10k	200u	Si	A1md
56	CR107	7.0k	550m	60A	15			125A	7.2 ∅	550m	60A	600u△	300u∅	60A	7.0k			Si△	M100c∅
57	60L70	7.0k	.60	25	40	8.3m		175	7.0	.60	25	5.0u	.20m	100	7.0k			Si	A1md
58	60L709	7.0k	600m	25	40	8.3m		175	7.0	600m	25	5.0u	200u	100	7.0k	10k	200u	Si	A1md
59	80L70	7.0k	.80	25	60	8.3m		175	7.0	80	25	5.0u	.20m	100	7.0k			Si	A1md
60	80L709	7.0k	800m	25	60	8.3m		175	7.0	800m	25	5.0u	200u	100	7.0k	10k	200u	Si	A1md
61	100L70	7 0k	1.0	25	60	8 3m		175	7.0	1.0	25	5.0u	.20m	100	7.0k			Si	A1md
62	100L709	7.0k	1 0	25	60	8.3m		175	7.0	1.0	25	5.0u	200u	100	7.0k	10k	200u	Si	A1md
63	BR870A†	7.0k	1.00	25	50	8.0m		150	12.0	.50	25	5.0u			7 0k			Si△	M541a
64	SLD7	7.0k	1 0	30A	50			125A	14	1.0	25A	10u			7.0k			Si△	M239e
65	KVP7	7.0k$	1.0	50A	50			150A	10 △	1.0	25A	5.0u△			7.0k			Si△	M239e
66	VC70	7.0k†	1 5	40C	50			125A	12	.10	25	1.0u	1.0m	125A	7 0k			Si△	M430
67	2ASLD7	7.0k	1.8	25A	200			175A	12		25							Si	M239e
68#	P70H	7.0k	2 0	55A	140				9.9	2.0		100u							M267
69	KHP7	7.0k	2.75	25A	300			175A	10		25A	5.0u			7.0k			Si△	M239y
70	SODSLD7	7.0k	2.75	30A	290			140A	12	2.8	25A	25u			7.0k			Si△	M239y
71	SCPH14	7.0k	5.5	55A	300			150A	14	3 0	25A	110u	200u	100A	7.0k			Si	M496
72#	HSK816	7.1k	350m	45A	55	8.0m		150	8.0	250m	45	100n		25	7.7k	15k∅		Si	P10b
73	1N1144	7.2k	.05	75	3.5	5.0m		170	54	57m	50		.20m	50	7.2k			Si	F57f
74	1N1145	7.2k	.06	75	3 5	5.0m		170	36	.07	50		.20m	50	7.2k			Si	F57f
75	P1RP72	7.2k	.07	75A$	15			150S	21	.07	25	2 0u			7.2k			Si	A1nx
76	1N3151	7 2k	.10	100A	2 0			150A	27	10	25A		.25m	100A	7.2k			Si	A1nf
77	A1425PBH6AB1	7.2k	200m	50A				150A	10 8	100m	25	5.0u	100u	150A	7.2k			Si	A1jc
78	A1423PBH6AB1	7.2k	220m	50A				150A	10.8	100m	25	5.0u	100u	150A	7 2k			Si	M212
79	A1423PBC6AB1	7.2k	290m	50A				150A	10.8	100m	25	5 0u	100u	150A	7 2k			Si	M205n
80	1N1757	7.2k	29	75C$	6.0			150	54	.50	25	25u			7.2k			Si	F12u
81	A1425MH12AB1	7.2k	320m	50A				150A	10 8	100m	25	5.0u	100u	150A	7.2k			Si	A1jd
82	1N1758	7 2k	.33	75C$	6.0			150	36	.60	25	25u			7.2k			Si	F12u
83	A1423MH12AB1	7.2k	375m	50A				150A	10.8	100m	25	5.0u	100u	150A	7.2k			Si	M212c
84#	6RM72	7.2k	1.5	55A	150	10m		125A	8.0	1.5	25A	100u			7.2k			Si	M62e
85	CR305	7.2k†	5.0	50A	250	8.3m		125A	16.2	.50	25A	2.0m	2.0m	125A	7.2k			Si△	M503d
86	CR315	7.2k†	9.0	50A	250	8.3m		125A	16.2	50	25A	2.0m	2.0m	125A	7.2k			Si△	M503d
87	CR325	7.2k†	12	50A	400	8.3m		125A	17	90	25A	2.0m	2.0m	125A	7.2k			Si△	M503k
88	CR335	7 2k†	17	50A	400	8.3m		125A	17	90	25A	2.0m	2 0m	125A	7.2k			Si△	M503k
89	2L75	7 5k	.02	25	10	8.3m		175	8.0	.02	25	5.0u	.20m	100	7 5k			Si	A1mf
90	2L759	7 5k	20m	25	10	8 3m		175	8 0	20m	25	5.0u	200u	100	7.0k	10k	200u	Si	A1mf
91	5L75	7.5k	.05	25	10	8.3m		175	8 0	.05	25	5.0u	.20m	100	7 5k			Si	A1mf
92	5L759	7 5k	50m	25	10	8 3m		175	8.0	50m	25	5.0u	200u	100	7.5k	11k	200u	Si	A1mf
93	1N3762	7.5k	.065	70	15			150A	12	.01m	150A	10u	.10m	100	7.5k			Si	A1nj
94	10L75	7.5k	.10	25	20	8 3m		175	8.0	.10	25	5.0u	.20m	100	7.5k			Si	A1mf
95	10L759	7.5k	100m	25	20	8.3m		175	8.0	100m	25	5.0u	200u	100	7.5k	11k	200u	Si	A1mf
96	1N5183	7.5k	.10	55A	4.0 §	8 3m		175A	10	.10	55A		1 0m△	175A	7.5k			Si	A1fj
97	SC75	7 5k	100m	55$	4.0			175	10 5	100m	25	1 0u	20m	100	7.5k			Si	A1fg
98	SCE75	7.5k	.10	55A	4.0			175	10 △	10	25A	1 0u△	02m△	100A	7.5k			Si	A1fh
99	JAN1N5183	7.5k	125m	25A	1 0	8 3m		175A	10	130m	25	1.0u	20u	100A	7.5k			Si	A1fk
100	ST11	7 5k	130m	70$				100	10	130m	100							Si	M84y
101	15L75	7.5k	.15	25	20	8 3m		175	8 0	.15	25	5.0u	20m	100	7.5k			Si	A1mf
102	15L759	7.5k	150m	25	20	8.3m		175	8 0	150m	25	5.0u	200u	100	7.5k	11k	200u	Si	A1mf
103	HVC750	7 5k	15	55A	4 5			150	15	.15	25	10u			7.5k			Si	M291g
104	20L75	7.5k	.20	25	20	8 3m		175	8.0	.20	25	5 0u	.20m	100	7.5k			Si	A1mf
105	20L759	7.5k	200m	25	20	8.3m		175	8 0	200m	25	5 0u	200u	100	7.5k	11k	200u	Si	A1mf
106	25L75	7.5k	.25	25	20	8.3m		175	8.0	.25	25	5 0u	.20m	100	7.5k			Si	A1mf
107	25L759	7 5k	250m	25	20	8.3m		175	8.0	250m	25	5.0u	200u	100	7.5k	11k	200u	Si	A1mf
108	SCBR75A	7 5k	.25	30C	2 0			150										Si	M45e*
109	30L75	7 5k	.30	25	40	8 3m		175	8 0	30	25	5 0u	.20m	100	7.5k			Si	A1mf
110	30L759	7 5k	300m	25	40	8 3m		175	8.0	300m	25	5.0u	200u	100	7.5k	11k	200u	Si	A1mf

SYMBOLS AND CODES EXPLAINED IN INTERPRETER

5. RECTIFIERS

IN ORDER OF (1) PIV, (2) MAX AVG FWD CURRENT (3) TEMPERATURE, and (4) TYPE No.

LINE No.	4 TYPE No.	1 PIV (V)	MAX AVG FWD DC CURRENT 2 Io (A)	3 at TEMP (°C)	MAX RATINGS @ 25°C SURGE CUR. PEAK 1 Cy (A)	PULSE WIDTH (s)	DISS. (W)	MAX. TEMP (°C)	MAXIMUM FORWARD VOLTAGE DROP Vf (V)	at If (A)	at TEMP (°C)	MAX. REVERSE CURRENT Ir @25°C & Vr (A)	Ir at T & Vr (A)	TEMP T (°C)	TEST VOLT Vr (V)	AVALANCHE RATINGS MAX V BKDN. (V)	MIN SLOPE (A/V)	DESCRIPTION MAT.	DWG. No.
1#	HS41A	7.5k	350mØ	25A	2.8 †			150A	19 5	350m	25A	5.0u	55u	100A	7.5k			Si△	F12a
2#	HS31	7.5k	350m	35A	30	10m		150A	19.5	350m	25A	5.0u	55u	100A	7.5k			Si	F12a
3#	HX31	7.5k	.35	35A	30	10m		150A	19 5	.35	25A	5.0u	.06m	100A	7.5k			Si	A1nn
4	40L75	7.5k	.40	25	40	8.3m		175	8 0	.40	25	5.0u	.20m	100	7.5k			Si	A1mf
5	40L759	7.5k	400m	25	40	8.3m		175	8.0	400m	25	5.0u	200u	100	7.5k	11k	200u	Si	A1mf
6	50L75	7.5k	.50	25	40	8.3m		175	8.0	.50	25	5.0u	20m	100	7.5k			Si	A1mf
7	50L759	7.5k	500m	25	40	8.3m		175	8.0	500m	25	5.0u	200u	100	7 5k	11k	200u	Si	A1mf
8	SCBR75	7.5k	.50	30C				150										Si	M45d*
9	KVF7.5	7.5k	500m	55A	50			175A	10 △	500m	25A	100n△	25u△	100A	7.5k			Si△	A83az
10	SCH7500	7.5k	500m	55A	50			175	10 △	500m	25A	100n△	15u△	100A	7 5k			Si	A138f
11	60L75	7.5k	.60	25	40	8.3m		175	8.0	.60	25	5.0u	.20m	100	7.5k			Si	A1mf
12	60L759	7.5k	600m	25	40	8.3m		175	8.0	600m	25	5.0u	200u	100	7.5k	11k	200u	Si	A1mf
13	SC575	7.5k	600m	40A$	40 §			175A	10	600m	25A	1.0u	15u	100A	7.5k			Si	M101
14	80L75	7 5k	.80	25	60	8.3m		175	8.0	.80	25	5.0u	.20m	100	7.5k			Si	A1mf
15	80L759	7 5k	800m	25	60	8.3m		175	8 0	800m	25	5 0u	200u	100	7.5k	11k	200u	Si	A1mf
16	1N5596	7.5k	870m	100C	30		3 7kØ	150C	11	870m	100C		300u	100C	7.5k			Si	S221
17	1N5601	7.5k	920m	100C	100		13kØ	150C	11	920m	100C		750u	100C	7.5k			Si	S221
18	100L75	7.5k	1.0	25	60	8.3m		175	8.0	1.0	25	5 0u	20m	100	7.5k			Si	A1mf
19	100L759	7.5k	1.0	25	60	8.3m		175	8.0	1.0	25	5 0u	200u	100	7.5k	11k	200u	Si	A1mf
20♦	SCHS7500	7.5k	2.0	55	150			175A	15	1.0	25	10u	120u	100	7 5k			Si	A138y
21	1N5604	7.5k	2.3	100C	200		36kØ	150C	12	2.3	100C		1.0m	100C	7 5k			Si	S293
22	UGB7.5	7.5k	3.0	75C				150A	13	1.5	25	5.0u						Si	S293
23	SCPD30	7.5k	11	55A	300			150A	15	3.0	25A	110u	200u	100A	7 5k			Si	M496
24	SCPN30	7.5k	11	55A	300			150A	15	3 0	25A	110u	200u	100A	7.5k			Si	M496
25	SCPP30	7.5k	11	55A	300			150A	15	3 0	25A	110u	200u	100A	7 5k			Si	M496
26▼	XX8	8.0k	5.0m	25	1.0	8.0m		100A	20	5.0m	25	1 0u	30u	100	8 0k			Si	A83t
27▼	X10-8	8.0k	10m	25	3.0	8.0m		100A	10	10m	25	1.0u	40u	100	8.0k			Si	A1fc
28	LFD8	8.0k	.01	50	.75			150A	14	01	25	2.0u	.05m	80	8.0k			Si	A1hx
29▼	SL8⊘	8.0k	10m	55A	3.0	8.3m	2 0	150A	12	10m	25	100n	20u	100	8.0k			Si	A267
30	2L80	8.0k	.02	25	10	8 3m		175	8.0	.02	25	5.0u	.20m	100	8.0k			Si	A1mf
31	2L809	8.0k	.02	25	10	8.3m		175	8.0	02	25	5.0u	20m	100	8.0k	12k	200u	Si	A1mf
32	MC207	8.0k	.02	25	.75	8 0m			14	.02	25	1.5u			8.0k			Si	A1hy
33▼	SP8	8.0k	20m	25	3.0	8.3m	500m	150A	12	20m	25	500n	10u	100	8.0k			Si	A267e
34	7715-8	8.0k	025	25A	1 5	8 3m		125A	16	25m	25	1 0u	.10m	125	8.0k			Si△	A1jb
35	MC1082	8.0k	.025	25					16	.03	25	1 0u							A1kd
36	MC1082A	8.0k	.025	25					16	.03	25	.02u							A1kd
37▼	X25-8	8.0k	25m	25	3.0	8 0m		100A	10	25m	25	1.0u	40u	100	8 0k			Si	A1fc
38	HV80G	8.0k	30m	25	20	8.0m	.30		10	10m	25	2.0u	10m	100	8.0k			Si	A1fs
39	SH8K	8.0k	.03	70A	5.0	10m		100S	10	.03	25A	10u	.10m	100A	8.0k			Si	A168d
40	MC1081	8.0k	.035	25					10	04	25	1 0u							A1gr
41	MC1081A	8.0k	.035	25					10	04	25	02u							A1gr
42	HV80E6	8.0k	40m	25	1.0	8 0m	25	125A	6.0	10m	25	20n	3.0u	100	8 0k			Si	A83g
43	MC206	8.0k	04	25	1 2k	8 0m			10	.04	25	1.5u			8.0k			Si	A1hy
44	1N1146	8.0k	045	75	3.5	5 0m		170	60	05	50		.20m	50	8 0k			Si	F57g
45	5L80	8.0k	.05	25	10	8.3m		175	8 0	05	25	5.0u	.20m	100	8.0k			Si	A1mf
46	5L809	8.0k	.05	25	10	8.3m		175	8 0	.05	25	5.0u	20m	100	8.0k	12k	200u	Si	A1mf
47	HV80E	8.0k	50m	25	1.0	8.0m	1.9	125A	20	50m	25	1.0u	10m	100	8.0k			Si	A250
48	MC081	8.0k	.05	25A$				150A	8 0	.10	25A	1.0u			8.0k			Si	M54c
49	MC081A	8.0k	05	25A$				150A	8 0	10	25A	.02u			8.0k			Si	M54c
50	MC082	8.0k	05	25A$				150A	16	10	25A	1 0u			8.0k			Si	M54m
51	MC082A	8.0k	.05	25A$				150A	16	10	25A	.02u			8.0k			Si	M54m
52	PS2428	8.0k	05	25A$					20	5m	25A	10u			8.0k			Si	A1je
53▼	X50-8	8.0k	50m	25	3 0	8.0m		100A	10	50m	25	1.0u	40u	100	8 0k			Si	A1fc
54▼	SM8	8.0k	50m	55A	4 0	8.3m	2 0	150A	15	50m	25	100n	25u	100	8.0k			Si	A267
55	P1RP80	8.0k	06	75A$	15			150S	21	.06	25	2.0u			8.0k			Si	A1pk
56	1N2384	8.0k†	.07	25A$	6 0	8 0m		150A	27	.10	25A	10u	10m	100A	8 0k			Si	A1kv
57	PS1147	8.0k†	07	25A$	2 5 §	8.0m		175A	31.5	.10	25A							Si	A1kv
58	7701-8A	8.0k	.075	25				125A	13	.05	25	1.0u	.10m	125	8.0k			Si△	A1jb
59	MHV8	8.0k	075	25A$	2.0			125A	13.5	75m	25	1 0u			8.0k			Si	F8
60	SE2384	8.0k	075	50A	3 0 §	10m		150A	25	.20	25	5.0u	75m	100	8.0k			Si	A1ky
61	10L80	8.0k	10	25	20	8.3m		175	8 0	.10	25	5.0u	20m	100	8 0k			Si	A1mf
62	10L809	8.0k	10	25	20	8 3m		175	8 0	10	25	5.0u	.20m	100	8.0k	12k	200u	Si	A1mf
63	BCD08	8.0k	100m	25A	10			125A	13	100m	25A	2.0u	100u	100A	8.0k			Si	A1ja
64#	HSC8	8.0k	.10	25A$				150A	16	.10	25A	5.0u			8.0k			Si	A1mu
65	DICR8	8.0k	110m	50	10	8.3m		150S	14	110m	25	2.0u			8 0k			Si	A1nj
66	15L80	8.0k	.15	25	20	8 3m		175	8 0	.15	25	5.0u	.20m	100	8.0k			Si	A1mf
67	15L809	8.0k	.15	25	20	8.3m		175	8.0	15	25	5.0u	20m	100	8.0k	12k	200u	Si	A1mf
68	US80	8.0k	15	25	10	8.3m		150A	14	10	25	2.0u	.10m	100	8.0k			Si	A1jq
69	DER8	8.0k	150m	50	30	8.3m	2 5	150S	14	150m	25	2.0u	20u	125	8.0k			Si	A1nj
70#	SMH08	8.0k	.15	50	15	10m		80	10	15	25	1.0m		25	8.0k			Si	M423
71#	SMHD08	8.0k	15	50	15	10m		80	10	15	25	1.0m		25	8.0k			Si	M424a
72	20L80	8 0k	20	25	20	8.3m		175	8.0	20	25	5.0u	20m	100	8.0k			Si	A1mf
73	20L809	8.0k	.20	25	20	8.3m		175	8 0	.20	25	5 0u	.20m	100	8 0k	12k	200u	Si	A1mf
74	580	8.0k	200m	25	20	8 0m		150	15	200m	25	2.0u			8 0k			Si△	A79d
75	DI580	8.0k	.20	25A$	20	8 0m		100A	15	20	25	2.0u			8.0k			Si	A79d
76	SLA08	8.0k	200m	25				150	8.0	500m		6.0u	75u	100	8 0k			Si	A1jq
77	CP132	8.0k	.20	75					12		25								M84av
78	CP133	8.0k	.20	75					12		25								M84aw
79	DI580LS	8.0k	.225	50A	40	8 0m		125	11	23	25A	5 0u			8.0k			Si	C42b
80#	O5RM80	8.0k	25	25A	2.0	1		150J	16	.25	25A	.50u	.03m	100	8.0k			Si	A83bn
81	25L80	8.0k	.25	25	20	8.3m		175	8.0	25	25	5.0u	.20m	100	8.0k			Si	A1mf
82	25L809	8.0k	.25	25	20	8.3m		175	8 0	25	25	5.0u	.20m	100	8 0k	12k	200u	Si	A1mf
83#	M80K	8 0k	.25	25A	2 0	1		150A	16	25 †	25	.50u	.03m	100A	8 0k			Si△	A83bn
84	NTD08	8.0k$	.25	25A	10			125A	12 △	.25	25A	1.0u△	.10m△	100A	8.0k			Si△	A1jj
85	1N1759	8 0k	25	75C$	6 0			150	60	40	25	25u			8.0k			Si	F12u
86	1N2384A	8.0k	275m	25A$	9 0	8 0m		200A	12	400m	25	1 0u	12u	150	8.0k			Si	A1gd
87	30L80	8.0k	.30	25	40	8.3m		175	8.0	30	25	5.0u	20m	100	8.0k			Si	A1mf
88	30L809	8.0k	.30	25	40	8.3m		175	8.0	30	25	5.0u	.20m	100	8.0k	12k	200u	Si	A1mf
89	880C	8 0k	300m	25	50	8.0m		150	10	300m	25	5.0u	25u	100	8 0k			Si△	M519b
90	PS1448	8.0k†	.30	25A$				175A	17	25	25A		.05m	100A	8 0k			Si	F13c
91	SLDHV8	8.0k	30	25A	22			175A	15		25							Si	M239e
92	DI880C	8.0k	300m	40A	50	8.3m		150J	10	300m	25	5 0u	25u	100	8 0k			Si	C42n
93	CR208	8 0k	.30	60A	9 0			125A	6.0 Ø	30	60A	10u△	.10m⊘	100	8 0k			Si△	A83s Ø
94#	HSKE5000/2200-.25																		
		8.0k	350m	45A	55	8 0m	7.5kØ	150A	9.0	2 0	25J					15kØ		Si	A167g
95	40L80	8.0k	.40	25	40	8 3m		175	8.0	40	25	5.0u	.20m	100	8.0k			Si	A1mf
96	40L809	8.0k	.40	25	40	8.3m		175	8.0	40	25	5.0u	.20m	100	8.0k	12k	200u	Si	A1mf
97	PS2358	8.0k	.40	25A$				175A	13	.20	25A	3 0u			8.0k			Si	M22
98#	1RM80	8 0k	.50	25A	12	10m		150A	18	1 0	25A	50u			8.0k			Si	M62g
99	50L80	8.0k	50	25	40	8 3m		175	8.0	50	25	5 0u	.20m	100	8.0k			Si	A1mf
100	50L809	8 0k	.50	25	40	8.3m		175	8.0	.50	25	5.0u	.20m	100	8.0k	12k	200u	Si	A1mf
101#	D80H	8 0k	50	25A	30	10m		100A†	24	.5 †	25	50u			8.0k			Si△	M62
102#	D80HL	8.0k	500m	25A	30	10m		100A	12	500m†	25A	1.0u						Si△	M62
103#	SWH08	8.0k	.50	50	45	10m		80	10	50	25	1.0m		25	8 0k			Si	M423a
104	CR108	8.0k	550m	60A	15			125A	7.8 Ø	550m	60A	600u△	300u⊘	60A	8.0k			Si△	M100cØ
105	60L80	8.0k	60	25	40	8 3m		175	8 0	60	25	5.0u	20m	100	8.0k			Si	A1mf
106	60L809	8.0k	60	25	40	8.3m		175	8.0	.60	25	5.0u	20m	100	8.0k	12k	200u	Si	A1mf
107#	HSKE5000/2200-.5																		
		8.0k	600m	45A	55	8 0m	7 5kØ	150A	8.5	3.0	25J					15kØ		Si	A167j
108	80L80	8 0k	80	25	60	8 3m		175	8.0	80	25	5 0u	.20m	100	8.0k			Si	A1mf

SYMBOLS AND CODES EXPLAINED IN INTERPRETER

5. RECTIFIERS

IN ORDER OF (1) PIV, (2) MAX AVG FWD CURRENT (3) TEMPERATURE, and (4) TYPE No.

LINE No	4 TYPE No.	1 PIV (V)	MAX AVG FWD DC CURRENT 2 Io (A)	3 at TEMP (°C)	MAX RATINGS @ 25°C SURGE CUR. PEAK 1 Cy (A)	PULSE WIDTH (s)	DISS. (W)	MAX TEMP (°C)	MAXIMUM FORWARD VOLTAGE DROP Vf (V)	at If (A)	at TEMP (°C)	MAX. REVERSE CURRENT Ir @25°C & Vr (A)	Ir at T & Vr (A)	TEMP T (°C)	AVALANCHE RATINGS TEST VOLT Vr (V)	MAX V BKDN. (V)	MIN SLOPE (A/V)	DESCRIPTION MAT.	DWG No.
1	80L809	8.0k	80	25	60	8 3m		175	8.0	.80	25	5.0u	.20m	100	8 0k	12k	200u	Si	A1mf
2	100L80	8 0k	1 0	25	60	8.3m		175	8.0	1.0	25	5 0u	20m	100	8 0k			Si	A1mf
3	100L809	8.0k	1.0	25	60	8.3m		175	8 0	1.0	25	5.0u	20m	100	8 0k	12k	200u	Si	A1mf
4	BR880A†	8.0k	1.00	25	50	8 0m		150	13.0	.50	25	5.0u			8.0k			Si△	M541a
5#	F80H	8.0k	1.0	25A	70	10m		100A†	16	1 †	25		10m	25A	8.0k			Si△	M62
6	SLD8	8.0k	1.0	30A	50			125A	16	1 0	25A	10u			8.0k			Si△	M214e
7	VC80	8.0k†	1 0	40C	50			125A	14	.10	25	1 0u	1.0m	125A	8.0k			Si△	M430
8	KV08	8 0k	1.0	50A	50			150A	11 △	1.0	25A	2 0u△			8.0k			Si	M462
9	KVP8	8 0k$	1.0	50A	50			150A	11 △	1 0	25A	5.0u△			8 0k			Si△	M239e
10#	HSKE5000/2200-1.2	8 0k	1.45	45A	90	8.0m	15k∅	150A	11	8 0	25J					15k∅		Si	A167s
11#	1S150R08	8.0k	1.5	25	80	10m		150A	12.5 †	5.0	25	2.0u	05m	100	8 0k			Si	M398
12#	6RM80	8.0k	1 5	55A	150	10m		125A	8 0	1 5	25A	100u			8.0k			Si	M62e
13	2ASLD8	8.0k	1.8	25A	200			175A	14		25							Si	M239e
14#	P80H	8.0k	2.0	55A	230	10m		125A	11	2 †	25	100u			8.0k			Si△	M267
15	KHP8	8.0k	2.75	25A	300			175A	11		25A	5 0u			8 0k			Si△	M239z
16	SODSLD8	8 0k	2.75	30A	290			140A	14	2.8	25A	25u			8.0k			Si△	M239z
17	SCPH16	8.0k	5.5	55A	300			150A	16	3.0	25A	110u	200u	100A	8.0k			Si	M496
18	HVC840	8.4k	.10	55A	3 0			150	16	.10	25	10u			8.4k			Si	M291h
19	A1425PBH7AB1	8 4k	190m	50A				150A	12 6	100m	25	5 0u	100u	150A	8.4k			Si	A1jc
20	A1423PBH7AB1	8.4k	220m	50A				150A	12 6	100m	25	5.0u	100u	150A	8.4k			Si	M212e
21	A1425MH14AB1	8.4k	285m	50A				150A	12.6	100m	25	5.0u	100u	150A	8.4k			Si	A1ku
22	CR306	8 4k†	5.0	50A	250	8.3m		125A	18.9	50	25A	2.0m	2 0m	125A	8.4k			Si△	M503e
23	CR316	8 4k†	9.0	50A	250	8.3m		125A	18.9	50	25A	2.0m	2 0m	125A	8.4k			Si△	M503e
24	2L85	8.5k	02	25	10	8.3m		175	9 0	02	25	5 0u	.20m	100	8.5k			Si	A1mp
25	2L859	8 5k	20m	25	10	8 3m		175	9.0	20m	25	5.0u	200u	100	8.5k	12k	200u	Si	A1mp
26	5L85	8.5k	05	25	10	8.3m		175	9 0	05	25	5 0u	.20m	100	8.5k			Si	A1mp
27	5L859	8 5k	50m	25	10	8.3m		175	9.0	50m	25	5.0u	200u	100	8.5k	12k	200u	Si	A1mp
28	10L85	8.5k	10	25	20	8 3m		175	9.0	.10	25	5 0u	.20m	100	8 5k			Si	A1mp
29	10L859	8.5k	100m	25	20	8.3m		175	9.0	100m	25	5 0u	200u	100	8.5k	12k	200u	Si	A1mp
30	15L85	8.5k	15	25	20	8 3m		175	9.0	.15	25	5 0u	20m	100	8.5k			Si	A1mp
31	15L859	8.5k	150m	25	20	8.3m		175	9 0	150m	25	5.0u	200u	100	8.5k	12k	200u	Si	A1mp
32	20L85	8.5k	.20	25	20	8 3m		175	9 0	.20	25	5 0u	.20m	100	8 5k			Si	A1mp
33	20L859	8.5k	200m	25	20	8.3m		175	9.0	200m	25	5 0u	200u	100	8.5k	12k	200u	Si	A1mp
34	25L85	8.5k	25	25	20	8 3m		175	9.0	.25	25	5 0u	20m	100	8.5k			Si	A1mp
35	25L859	8 5k	250m	25	20	8.3m		175	9 0	250m	25	5.0u	200u	100	8 5k	12k	200u	Si	A1mp
36	30L85	8.5k	.30	25	40	8 3m		175	9.0	30	25	5.0u	.20m	100	8.5k			Si	A1mp
37	30L859	8.5k	300m	25	40	8 3m		175	9 0	300m	25	5.0u	200u	100	8.5k	12k	200u	Si	A1mp
38	40L85	8.5k	.40	25	40	8.3m		175	9.0	.40	25	5 0u	.20m	100	8.5k			Si	A1mp
39	40L859	8.5k	400m	25	40	8 3m		175	9 0	400m	25	5.0u	200u	100	8.5k	12k	200u	Si	A1mp
40	50L85	8.5k	.50	25	40	8.3m		175	9.0	50	25	5 0u	.20m	100	8.5k			Si	A1mp
41	50L859	8.5k	500m	25	40	8.3m		175	9.0	500m	25	5 0u	200u	100	8.5k	12k	200u	Si	A1mp
42	60L85	8.5k	60	25	40	8.3m		175	9 0	.60	25	5.0u	20m	100	8.5k			Si	A1mp
43	60L859	8 5k	600m	25	40	8.3m		175	9 0	600m	25	5.0u	200u	100	8.5k	12k	200u	Si	A1mp
44	80L85	8.5k	.80	25	60	8 3m		175	9.0	.80	25	5.0u	.20m	100	8.5k			Si	A1mp
45	80L859	8.5k	800m	25	60	8 3m		175	9 0	800m	25	5 0u	200u	100	8 5k	12k	200u	Si	A1mp
46	100L85	8.5k	1.0	25	60	8.3m		175	9 0	1.0	25	5.0u	20m	100	8 5k			Si	A1mp
47	100L859	8.5k	1.0	25	60	8.3m		175	9 0	1.0	25	5.0u	200u	100	8 5k	12k	200u	Si	A1mp
48▼	X10-9	9.0k	10m	25	3.0	8.0m		100A	10	10m	25	1.0u	40u	100	9.0k			Si	A1fc
49	2L90	9.0k	.02	25	10	8.3m		175	9 0	.02	25	5 0u	.20m	100	9.0k			Si	A1mp
50	2L909	9.0k	20m	25	10	8 3m		175	9 0	20m	25	5.0u	200u	100	9.0k	13k	200u	Si	A1mp
51	MC208	9 0k	20m	25	750m	8.0m			15	20m	25	1 5u			9.0k			Si	A1ks
52	MC209	9 0k	.02	25	75	8 0m			15	02	25	1 5u			9 0k			Si	A1ks
53▼	SP9	9 0k	20m	25	3.0	8.3m	500m	150A	12	20m	25	500n	10u	100	9.0k			Si	A267e
54	7715-9	9.0k	.025	25A	1 5	8.3m		125A	18	25m	25	1.0u	10m	125	9.0k			Si△	A1jb
55▼	X25-9	9 0k	25m	25	3 0	8.0m		100A	10	25m	25	1.0u	40u	100	9.0k			Si	A1fc
56	HV90G	9 0k	30m	25	20	8.0m	.30		10	10m	25	2 0u	10m	100	9.0k			Si	A1fs
57	5L90	9 0k	.05	25	10	8.3m		175	9 0	05	25	5 0u	.20m	100	9.0k			Si	A1mp
58	5L909	9.0k	50m	25	10	8.3m		175	9.0	50m	25	5.0u	200u	100	9.0k	13k	200u	Si	A1mp
59	HV90E	9.0k	50m	25	1 0	8.0m	1.9	125A	20	50m	25	1.0u	10m	100	9.0k			Si	A250
60	PS2429	9.0k	.05	25A$					24	5m	25A	10u			9.0k			Si	A1je
61▼	X50-9	9.0k	50m	25	3.0	8 0m		100A	10	50m	25	1.0u	40u	100	9 0k			Si	A1fc
62	7701-9A	9.0k	.075	25	3.0	8.3m		125A	14	05	25	1.0u	.10m	125	9 0k			Si△	A1jb
63	MHV9	9 0k	.075	25A$	2 0			125A	13.5	75m	25	1 0u			9.0k			Si	F8
64	10L90	9.0k	.10	25	20	8.3m		175	9 0	10	25	5.0u	20m	100	9 0k			Si	A1mp
65	10L909	9.0k	100m	25	20	8.3m		175	9.0	100m	25	5 0u	200u	100	9.0k	13k	200u	Si	A1mp
66#	HSC9	9.0k	.10	25A$				150A	18	.10	25A	5 0u			9.0k			Si	A1nv
67	DICR9	9.0k	100m	50	10	8.3m		150S	16	100m	25	2.0u			9.0k			Si	A1nj
68	DER9	9.0k	140m	50	30	8.3m	2.5	150S	16	140m	25	2.0u	20u	125	9.0k			Si	A1nj
69	15L90	9.0k	15	25	20	8 3m		175	9 0	.15	25	5 0u	.20m	100	9.0k			Si	A1mp
70	15L909	9 0k	150m	25	20	8 3m		175	9.0	150m	25	5 0u	200u	100	9.0k	13k	200u	Si	A1mp
71	DI590LS	9.0k	.175	50A	40	8.0m		125	13	.18	25A	5.0u			9.0k			Si	C42a
72	20L90	9.0k	.20	25	20	8.3m		175	9 0	20	25	5.0u	.20m	100	9 0k			Si	A1mp
73	20L909	9.0k	200m	25	20	8.3m		175	9.0	200m	25	5.0u	200u	100	9.0k	13k	200u	Si	A1mp
74	590	9.0k	200m	25	20	8.0m		150	15	200m	25	2.0u			9.0k			Si△	A79d
75	DI590	9.0k	.20	25A$	20	8.0m		100A	15	20	25	2.0u			9 0k			Si	A79d
76	25L90	9 0k	25	25	20	8.3m		175	9.0	.25	25	5.0u	.20m	100	9.0k			Si	A1mp
77	25L909	9.0k	250m	25	20	8.3m		175	9 0	250m	25	5.0u	200u	100	9 0k	13k	200u	Si	A1mp
78	PS1449	9 0k†	.25	25A$				175A	22	.25	25A		.05m	100A	9.0k			Si	F13c
79	30L90	9 0k	30	25	40	8.3m		175	9.0	.30	25	5.0u	20m	100	9.0k			Si	A1mp
80	30L909	9 0k	300m	25	40	8.3m		175	9 0	300m	25	5.0u	200u	100	9.0k	13k	200u	Si	A1mp
81	890C	9 0k	300m	25	50	8.0m		150	12	300m	25	5.0u	25u	100	9 0k			Si△	M519c
82	SLDHV9	9 0k	30	25A	22			175A	18		25							Si	M239e
83	DI890C	9.0k	300m	40A	50	8 3m		150J	12	300m	25	5.0u	25u	100	9 0k			Si	C42p
84	PS2359	9 0k	35	25A$				175A	15	.20	25A	3.0u			9.0k			Si	M22
85	40L90	9.0k	.40	25	40	8.3m		175	9.0	.40	25	5.0u	.20m	100	9.0k			Si	A1mp
86	40L909	9.0k	400m	25	40	8.3m		175	9 0	400m	25	5.0u	200u	100	9.0k	13k	200u	Si	A1mp
87	50L90	9.0k	.50	25	40	8.3m		175	9 0	.50	25	5.0u	20m	100	9.0k			Si	A1mp
88	50L909	9.0k	500m	25	40	8.3m		175	9.0	500m	25	5.0u	200u	100	9.0k	13k	200u	Si	A1mp
89	CR109	9 0k	.55	60A	15			125A	9 0 ∅	.55	60A	600u△	.30m☑	60A	9.0k			Si△	M100d∅
90	60L90	9 0k	.60	25	40	8.3m		175	9 0	.60	25	5.0u	20m	100	9.0k			Si	A1mp
91	60L909	9 0k	600m	25	40	8.3m		175	9.0	600m	25	5.0u	200u	100	9 0k	13k	200u	Si	A1mp
92	80L90	9.0k	.80	25	60	8.3m		175	9.0	.80	25	5.0u	.20m	100	9.0k			Si	A1mp
93	80L909	9.0k	800m	25	60	8.3m		175	9 0	800m	25	5.0u	200u	100	9.0k	13k	200u	Si	A1mp
94	100L90	9.0k	1.0	25	60	8.3m		175	9.0	1.0	25	5.0u	.20m	100	9.0k			Si	A1mp
95	100L909	9.0k	1.0	25	60	8.3m		175	9 0	1.0	25	5.0u	200u	100	9.0k	13k	200u	Si	A1mp
96	BR890A†	9 0k	1 00	25	50	8.0m		150	15 0	.50	25	5.0u			9.0k			Si△	M541a
97	SLD9	9.0k	1.0	30A	50			125A	18	1.0	25A	10u			9.0k			Si△	M214e
98	KVP9	9.0k$	1.0	50A	50			150A	14 △	1 0	25A	5.0u△			9.0k			Si△	M239e
99	2ASLD9	9.0k	1 8	25A	200			175A	15		25							Si	M239e
100	KHP9	9.0k	2 5	25A	300			175A	14		25A	5.0u			9 0k			Si△	
101	SODSLD9	9 0k	2.5	30A	290			140A	16	2.5	25A	25u			9 0k			Si△	
102	SCPH18	9.0k	5.5	55A	300			150A	18	3.0	25A	110u	200u	100A	9.0k			Si	M496
103	2L95	9.5k	.02	25	10	8.3m		175	10	.02	25	5.0u	.20m	100	9.5k			Si	A1qh
104	2L959	9 5k	20m	25	10	8.3m		175	10	20m	25	5.0u	200u	100	9.5k	14k	200u	Si	A1qh
105	5L95	9.5k	.05	25	10	8.3m		175	10	.05	25	5.0u	.20m	100	9.5k			Si	A1ms
106	5L959	9 5k	50m	25	10	8.3m		175	10	50m	25	5.0u	200u	100	9.5k	14k	200u	Si	A1qh
107	10L95	9 5k	.10	25	20	8 3m		175	10	.10	25	5.0u	20m	100	9 5k			Si	A1qh
108	10L959	9.5k	100m	25	20	8 3m		175	10	100m	25	5 0u	200u	100	9.5k	14k	200u	Si	A1qh
109	15L95	9 5k	.15	25	20	8.3m		175	10	.15	25	5.0u	.20m	100	9.5k			Si	A1qh

SYMBOLS AND CODES EXPLAINED IN INTERPRETER

5. RECTIFIERS

IN ORDER OF (1) PIV, (2) MAX AVG FWD CURRENT (3) TEMPERATURE, and (4) TYPE No.

LINE No	4 TYPE No.	1 PIV (V)	MAX AVG FWD DC CURRENT 2 Io (A)	3 at TEMP (°C)	MAX RATINGS @ 25°C SURGE CUR. PEAK 1 Cy (A)	PULSE WIDTH (s)	DISS. (W)	MAX. TEMP (°C)	MAXIMUM FORWARD VOLTAGE DROP Vf (V)	at If (A)	at TEMP (°C)	MAX. REVERSE CURRENT Ir @25°C & Vr (A)	Ir at T & Vr (A)	TEMP T (°C)	TEST VOLT Vr (V)	AVALANCHE RATINGS MAX V BKDN. (V)	MIN SLOPE (A/V)	MAT.	DESCRIPTION DWG. No.
1	15L959	9.5k	150m	25	20	8.3m		175	10	150m	25	5 0u	200u	100	9.5k	14k	200u	Si	A1qh
2	20L95	9.5k	20	25	20	8 3m		175	10	.20	25	5.0u	.20m	100	9.5k			Si	A1qh
3	20L959	9.5k	200m	25	20	8 3m		175	10	200m	25	5.0u	200u	100	9 5k	14k	200u	Si	A1qh
4	25L95	9.5k	.25	25	20	8.3m		175	10	25	25	5.0u	.20m	100	9.5k			Si	A1qh
5	25L959	9 5k	250m	25	20	8.3m		175	10	250m	25	5.0u	200u	100	9.5k	14k	200u	Si	A1qh
6	30L95	9 5k	.30	25	40	8 3m		175	10	.30	25	5 0u	.20m	100	9 5k			Si	A1qh
7	30L959	9 5k	300m	25	40	8.3m		175	10	300m	25	5.0u	200u	100	9.5k	14k	200u	Si	A1qh
8	40L95	9.5k	.40	25	40	8.3m		175	10	.40	25	5 0u	.20m	100	9.5k			Si	A1qh
9	40L959	9.5k	400m	25	40	8 3m		175	10	400m	25	5.0u	200u	100	9.5k	14k	200u	Si	A1qh
10	50L95	9 5k	50	25	40	8.3m		175	10	.50	25	5.0u	.20m	100	9.5k			Si	A1ms
11	50L959	9.5k	500m	25	40	8.3m		175	10	500m	25	5.0u	200u	100	9.5k	14k	200u	Si	A1ms
12	60L95	9.5k	.60	25	40	8.3m		175	10	.60	25	5.0u	.20m	100	9.5k			Si	A1ms
13	60L959	9.5k	600m	25	40	8 3m		175	10	600m	25	5.0u	200u	100	9.5k	14k	200u	Si	A1ms
14	80L95	9 5k	80	25	60	8.3m		175	10	.80	25	5.0u	.20m	100	9.5k			Si	A1ms
15	80L959	9.5k	800m	25	60	8 3m		175	10	800m	25	5.0u	200u	100	9 5k	14k	200u	Si	A1ms
16	100L95	9.5k	1.0	25	60	8 3m		175	10	1.0	25	5.0u	.20m	100	9.5k			Si	A1ms
17	100L959	9.5k	1 0	25	60	8 3m		175	10	1 0	25	5.0u	200u	100	9.5k	14k	200u	Si	A1ms
18	HVC960	9.6k	10	55A	3 0			150	18	.10	25	10u			9 6k			Si	M291j
19	A1425PBH8AB1	9 6k	165m	50A				150A	14 4	100m	25	5.0u	100u	150A	9.6k			Si	A1jc
20	A1423PBH8AB1	9 6k	175m	50A				150A	14 4	100m	25	5.0u	100u	150A	9.6k			Si	M212e
21	A1425MH16AB1	9.6k	275m	50A				150A	14 4	100m	25	5.0u	100u	150A	9.6k			Si	A1ku
22	CR307	9.6k†	5.0	50A	250	8.3m		125A	21 6	50	25A	2.0m	2.0m	125A	9.6k			Si△	M503f
23	CR317	9.6k†	9.0	50A	250	8.3m		125A	21.6	50	25A	2.0m	2.0m	125A	9.6k			Si△	M503f
24	VG10	10k†	15n	40A	3 0			125A	20	15m	25	1.0u	40u	125A	10k			Si△	A83t
25▼	XX10	10k	5 0m	25	1 0	8 0m		100A	20	5 0m	25	1.0u	30u	100	10k			Si	A83t
26▼	HV5-10	10k	5.0m	40	3 0	8.0m		150A	18	5.0m	25	1.0u	40u	100	10k			Si△	A1td
27▼	HV5-10F	10k	5 0m	40	3.0	8.0m		125A	30	5.0m	25	2.0u	100u	100	10k			Si△	A1td
28	VF5-10	10k†	5.0m	40A	3 0			125A	12	5.0m	25	1.0u	40u	125A	10k			Si△	A83af
29	SCMS10K	10k	5.0m	55A	2 0	8.3m		150A	30	10m	25A	100n△	2.0u△	100A	10k			Si	A1sa
30	KLR10	10k	10m	25	5 0			150S	8 8 §△	10m†	25	2.0u△	100u	70	10k	12kØ		Si	A1jv
31▼	HV10-10	10k	10m	40	3.0	8.0m		150A	18	10m	25	1.0u	40u	100	10k			Si△	A1td
32▼	HV10-10F	10k	10m	40	3 0	8 0m		125A	30	10m	25	2.0u	100u	100	10k			Si△	A1td
33	VF10-10	10k†	10m	40A	3 0			125A	12	10m	25	1.0u	40u	125A	10k			Si△	A83af
34	LFD10	10k	10m	50	750m			150A	14	10m	25	2.0u	50u	80	10k			Si	A1hx
35▼	SL10Ø	10k	10m	55A	3 0	8.3m	2 0	150A	12	10m	25	100n	20u	100	10k			Si	A267
36	2L100	10k	20m	25	10	8 3m		175	10	20m	25	5.0u	200u	100	10k			Si	A1qh
37	2L1009	10k	20m	25	10	8.3m		175	10	20m	25	5 0u	200u	100	10k	15k	200u	Si	A1qh
38	KL10	10k	20m	25	5 0			150S	8.8 §△	20m†	25	1.0u△	50u	100	10k	12kØ		Si	A1jv
39	MC211	10k	20m	25	750m	8.0m			17	20m	25	1.5u			10k			Si	A1ks
40▼	SP10	10k	20m	25	3 0	8 3m	500m	150A	12	20m	25	500n	10u	100	10k			Si	A267e
41	7715-10	10k	25m	25A	1 5	8 3m		125A	20	25m	25	1 0u	100u	125	10k			Si△	A1jb
42	MC1091	10k	25m	25					13	30m	25	1 0u							A1kd
43	MC1091A	10k	25m	25					13	30m	25	20n							A1kd
44	MC1095	10k	25m	25					24	30m	25	1.0u							A1mj
45	MC1095A	10k	25m	25					24	30m	25	20n							A1mj
46▼	HV25-10	10k	25m	40	3 0	8 0m		150A	18	25m	25	1 0u	40u	100	10k			Si△	A1td
47▼	HV25-10F	10k	25m	40	3.0	8.0m		125A	30	25m	25	2.0u	100u	100	10k			Si△	A1td
48	VF25-10	10k†	25m	40A	3 0			125A	12	25n	25	1 0u	40u	125A	10k			Si△	A83af
49	1N2381	10k	25m	100A	12	8 3m		150A	37 5	30m	100A		100m	100A	600			Si	A1nf
50	HV100G	10k	30m	25	20	8 0m	.30		10	10m	25	2 0u	10m	100	10k			Si	A1fs
51#	SH10K	10k	30m	70A	5 0	10m		100S	10	30m	25A	10u	100u	100A	10k			Si△	A168d
52	MC210	10k	40m	25	1 2	8.0m			12	40m	25	1.5u			10k			Si	A1ks
53	P1RF100	10k	45m	75A$	15			150S	21	50m	25	2.0u			10k			Si	F12u
54	5L100	10k	50m	25	10	8.3m		175	10	50m	25	5.0u	200u	100	10k			Si	A1ms
55	5L1009	10k	50m	25	10	8 3m		175	10	50m	25	5 0u	200u	100	10k	15k	200u	Si	A1ms
56	HV100E	10k	50m	25	1 0	8 0m	1 9	125A	20	50m	25	1 0u	10m	100	10k			Si	A250
57	MC091	10k	50m	25A$				150A	10	100m	25A	1 0u			10k			Si	M54e
58	MC091A	10k	50m	25A$				150A	10	100m	25A	20n			10k			Si	M54e
59	MC095	10k	50m	25A$	3 0			150A	20	60m	25A	1.0u			10k			Si	M54h
60	MC095A	10k	50m	25A$	3.0			150A	20	60m	25A	20n			10k			Si	M54h
61	PS2430	10k	50m	25A$					26	5 0m	25A	10u			10k			Si	A1je
62▼	SM10Ø	10k	50m	55A	4 0	8.3m	2.0	150A	15	50m	25	100n	25u	100	10k			Si	A267
63	P1RP100	10k	60m	75A$	15			150S	21	60m	25	2 0u			10k			Si	A1pz
64	1N2385	10k†	70m	25A$	6.0	8.0m		150A	39	100m	25A	10u	100u	100A	10k			Si	A1mu
65	PS1148	10k†	70m	25A$	2 5 §	8.0m		175A	31.5	100m	25A								A1mu
66	7701-10B	10k	75m	25	3 0	8 3m		125A	16	50m	25	1.0u	100u	125	10k			Si△	A1jb
67	MHV10	10k	75m	25A$	2 0			125A	13 5	75m	25	1 0u			10k			Si	F8
68	SE2385	10k	75m	50A	3 0 §	10m		150A	30	200m	25	5 0u	75m	100	10k			Si	A1mz
69	DICR10	10k	90m	50	10	8.3m		150S	18	90m	25	2.0u			10k			Si	A1nj
70	10L100	10k	100m	25	20	8 3m		175	10	100m	25	5.0u	200u	100	10k			Si	A1qh
71	10L1009	10k	100m	25	20	8 3m		175	10	100m	25	5 0u	200u	100	10k	15k	200u	Si	A1qh
72	BCD10	10k	100m	25A	10			125A	13	100m	25A	2.0u	100u	100A	10k			Si	A1ja
73#	HSC10	10k	100m	25A$				150A	20	100m	25A	5.0u			10k			Si	A1nv
74	PS3200	10k	100m	25A	5.0 †	8.0m		175A	30	100m	25	1 0u			10k			Si	A83p
75	1N5184	10k	100m	55A	4.0 §	8 3m		175A	10	100m	55A		1.0m△	175A	10k			Si	A1fj
76	HVC1000	10k	100m	55A	3 0			150	20	100m	25	10u			10k			Si	M291k
77	SC100Ø	10k	100m	55$	4.0			175	10.5	100m	25	1 0u	20m	100	10k			Si	A1fg
78	SCE100	10k	100m	55A	4.0			175	10 △	100m	25A	1 0u△	20u△	100A	10k			Si	A1fh
79	JAN1N5184	10k	125m	25A	1.0	8 3m		175A	10	130m	25	1 0u	20u	100A	10k			Si	A1fk
80	DER10	10k	130m	50	30	8.3m	2 5	150S	17	130m	25	2 0u	20u	125	10k			Si	A1nj
81	15L100	10k	150m	25	20	8.3m		175	10	150m	25	5.0u	200u	100	10k			Si	A1qh
82	15L1009	10k	150m	25	20	8.3m		175	10	150m	25	5 0u	200u	100	10k	15k	200u	Si	A1qh
83	CFR10	10k	150m	25	10			100A	8 8 §△	150m†	25	2 0u△	100u	100	10k	12kØ		Si	F12v
84	CLR10	10k	150m	25	10			100A	8 8 §△	150m†	25	2.0u△	100u	100	10k	12kØ		Si	A1jv
85	US100	10k	150m	25	10	8.3m		150A	17	100m	25	2.0u	100u	100	10k			Si	A1jq
86	DI5100LS	10k	150m	50A	40	8 0m		125	15	150m	25A	5 0u			10k			Si	C42a
87#	SMH10	10k	150m	50	15	10m		80	10	150m	25	1.0m		25	10k			Si	M423
88#	SMHD10	10k	150m	50	15	10m		80	10	150m	25	1 0m		25	10k			Si	M424a
89#	HS52	10k	175m	25A	5 0	10m		150J	14	180m	25A	5 0u	60u	100A	10k			Si	A1ns
90	A1423PBH9AB1	10k	175m	50A				150A	16.2	100m	25	5 0u	100u	150A	10k			Si	M212f
91	A1425PBH9AB1	10k	185m	50A				150A	16 2	100m	25	5 0u	100u	150A	10k			Si	A1ku
92	1N2385A	10k	200m	25A$	9.0	8.0m		200A	15	400m	25	1.0u	12u	150	10k			Si	A1gd
93	20L100	10k	200m	25	20	8.3m		175	10	200m	25	5 0u	200u	100	10k			Si	A1qh
94	20L1009	10k	200m	25	20	8.3m		175	10	200m	25	5 0u	200u	100	10k	15k	200u	Si	A1qh
95	5100	10k	200m	25	20	8.0m		150	15	200m	25	2.0u			10k			Si△	A79d
96	CF10	10k	200m	25	10			125A	8 8 §△	200m†	25	1.0u△	50u	100	10k	12kØ		Si	F12v
97	CL10	10k	200m	25	10			125A	8.8 §△	200m†	25	1.0u△	50u	100	10k	12kØ		Si	A1jv
98	SLA010	10k	200m	25				150	10	500m		10u	100u	100	10k			Si	A1jq
99	A1425MH18AB1	10k	245m	50A				150A	16 2	100m	25	5.0u	100u	150A	10k			Si	A1ku
100#	05RM100	10k	250m	25A	2 0	1.0		150J	20	250m	25A	500n	30u	100	10k			Si	A83bv
101	25L100	10k	250m	25	20	8.3m		175	10	250m	25	5 0u	200u	100	10k			Si	A1qh
102	25L1009	10k	250m	25	20	8 3m		175	10	250m	25	5.0u	200u	100	10k	15k	200u	Si	A1qh
103	NTD10	10k$	250m	25A	10			125A	15 △	250m	25A	1 0u△	100u△	100A	10k			Si△	A1kh
104	PS1450	10k†	250m	25A$				175A	22	230m	25A		50u	100A	10k			Si	F13c
105	SCBR100A	10k	250m	30C	2 0			150										Si	M45e*
106#	AV3B28	10k	250m	55A	40	100m		140J	10	250m	25A	10u	100u	140J	8.0k	18k	20u	Si△	
107	1N2637	10k	250m	70$				100A	28	250m	100	350uØ			6.4k			Si	M84g
108	KR866	10k	250m	75$														Si	M84g
109	30L100	10k	300m	25	40	8 3m		175	10	300m	25	5 0u	200u	100	10k			Si	A1qh
110	30L1009	10k	300m	25	40	8 3m		175	10	300m	25	5.0u	200u	100	10k	15k	200u	Si	A1qh

SYMBOLS AND CODES EXPLAINED IN INTERPRETER

5. RECTIFIERS

IN ORDER OF (1) PIV, (2) MAX AVG FWD CURRENT (3) TEMPERATURE, and (4) TYPE No.

LINE No.	4 TYPE No	1 PIV (V)	MAX AVG FWD DC CURRENT 2 Io (A)	3 at TEMP (°C)	MAX RATINGS @ 25°C SURGE CUR. PEAK 1 Cy (A)	PULSE WIDTH (s)	DISS. (W)	MAX. TEMP (°C)	MAXIMUM FORWARD VOLTAGE DROP Vf (V)	at If (A)	at TEMP (°C)	MAX. REVERSE CURRENT Ir @25°C & Vr (A)	Ir at T & Vr (A)	TEMP T (°C)	TEST VOLT Vr (V)	AVALANCHE RATINGS MAX V BKDN. (V)	MIN SLOPE (A/V)	MAT.	DESCRIPTION DWG. No.
1	8100C	10k	300m	25	50	8 0m		150	12	300m	25	5 0u	25u	100	10k			Si△	M519c
2	DI5100	10k	300m	25A	20	8 0m		100A	15	20	25	2 0u			10k			Si	A79d
3	SLDHV10	10k	300m	25A	22			175A	21		25							Si	M239f
4	T10KV	10k†	300m	25A				125A							10k			Si	
5	DI8100C	10k	300m	40A	50	8.3m		150J	12	300m	25	5.0u	25u	100	10k			Si	C42p
6	CR210	10k	300m	60A	9 0			125A	7.2 Ø	300m	60A	10u△	100u⊠	100	10k			Si△	A83p Ø
7	DI3B28	10k	300m	100	50			100				10u		25	10k				M213
8	DI866	10k	300m	100	50			100				10u		25	10k				M213
9	DI866A	10k	300m	100C	50	8.0m		100				10u		25	10k			Si	M213
10	PS2360	10k	330m	25A$				175A	16	200m	25A	3 0u			10k			Si	M22
11#	HS42A	10k	350mØ	25A	2.8 †			150A	23	350m	25A	5.0u	60u	100A	10k			Si△	F12b
12#	HS32	10k	350m	35A	30	10m		150A	23	350m	25A	5.0u	60u	100A	10k			Si	F12b
13#	HX32	10k	350m	35A	30	10m		150A	23	350m	25A	5.0u	65u	100A	10k			Si	A1pj
14	40L100	10k	400m	25	40	8.3m		175	10	400m	25	5 0u	200u	100	10k			Si	A1qh
15	40L1009	10k	400m	25	40	8 3m		175	10	400m	25	5 0u	200u	100	10k	15k	200u	Si	A1qh
16	50L100	10k	500m	25	40	8.3m		175	10	500m	25	5.0u	200u	100	10k			Si	A1ms
17	50L1009	10k	500m	25	40	8.3m		175	10	500m	25	5 0u	200u	100	10k	15k	200u	Si	A1ms
18	SCBR100	10k	500m	30C	20			150										Si	M45d*
19	SC5100	10k	500m	40A$	40 §			175A	13	500m	25A	1.0u	15u	100A	10k			Si	M101
20#	SWH10	10k	500m	50	45	10m		80	10	500m	25	1.0m		25	10k			Si	M423a
21	KVF10	10k	500m	55A	50			175A	14 △	500m	25A	100n△	25u△	100A	10k			Si△	A83bk
22	SCH10000	10k	500m	55A	50			175	14 △	500m	25A	100n△	15u△	100A	10k			Si	A138g
23	CP134	10k	500m	75					14		25								M84bw
24#	HSKE7500/3300-.4																		
		10k	550m	45A	55	8.0m	11kØ	150A	13	3.0	25J					20kØ		Si	A167k
25	CR110	10k	550m	60A	15			125A	9.6 Ø	550m	60A	600u△	300u⊠	60A	10k			Si△	M100dØ
26	1N1699	10k	580m	75A$	3.5			160A	37 Ø	90m		25u△			10k			Si	F12t
27	60L100	10k	600m	25	40	8.3m		175	10	600m	25	5.0u	200u	100	10k			Si	A1ms
28	60L1009	10k	600m	25	40	8.3m		175	10	600m	25	5 0u	200u	100	10k	15k	200u	Si	A1ms
29	1N5597	10k	700m	100C	30		5.0kØ	150C	14.5	700m	100C		300u	100C	10k			Si	S221
30	80L100	10k	800m	25	60	8.3m		175	10	800m	25	5.0u	200u	100	10k			Si	A1ms
31	80L1009	10k	800m	25	60	8.3m		175	10	800m	25	5.0u	200u	100	10k	15k	200u	Si	A1ms
32	100L100	10k	1 0	25	60	8.3m		175	10	1.0	25	5.0u	200u	100	10k			Si	A1ms
33	100L1009	10k	1.0	25	60	8.3m		175	10	1 0	25	5.0u	200u	100	10k	15k	200u	Si	A1ms
34	BR8100A†	10k	1 00	25	50	8 0m		150	17.0	.50	25	5.0u			10k			Si△	M541b
35#	F100H	10k	1.0	25A	70	10m		100A†	20	1.0 †	25		10m	25A	10k			Si△	M62
36	SLD10	10k	1.0	30A	50			125A	21	1 0	25A	10u			10k			Si△	M239f
37	SC10100	10k	1.0	40A$	200 §			175A	13	1.0	25A	800u	1.0m	100A	10k			Si	M280a
38	KV010	10k	1.0	50A	50			150A	15 △	1.0	25A	2.0u△			10k			Si	M462
39	KVP10	10k$	1.0	50A	50			150A	15 △	1.0	25A	5.0u△			10k			Si△	M239f
40	ST10	10k	1 2	75$	10			75A	32 §	1.3	25	100uØ			10k			Si	M84j
41	S5344	10k	1.2	100A				100A										Si	M65
42	S5373	10k	1.2	100A				100A										Si	M65a
43	S872A	10k	1.25	50C	250	8.3m		150C	15	3.0	25C	10u	200m	100C	10k			Si	M240e
44	S8008	10k	1 25	50C	250	8.3m		150C	15	3.0	25C	10u	200m	100C	10k				M240h
45#	AV4B32	10k	1.25	55A	70	100m		150J	16	1.2	25A	10u	100u	150J	8.0k	29k	15u	Si△	
46	CP135	10k	1.25	75					14		25								M84ax
47	CP136	10k	1.25	75					14		25								M84bx
48	ST9	10k	1.25	75$	10			75A	32 §	1.3	25	100uØ			10k			Si	M84h
49#	HSKE7500/3300-1 2																		
		10k	1.4	45A	90	8.0m	22kØ	150A	15	8.0	25J					20kØ		Si	A167t
50#	1S150R10	10k	1.5	25	80	10m		150A	17 †	5.0	25	2 0u	50u	100	10k			Si	M398
51	2ASLD10TRA	10k	1.5	55$														Si	M240a
52	2ASLD10TRB	10k	1 5	55$														Si	M240c
53	2ASLD10	10k	1 8	25A	200			175A	17		25							Si	M239f
54♦	SCHS10000	10k	2 0	55	150			175A	20	1.0	25	10u	120u	100	10k			Si	A138z
55	UGB10	10k	2 3	75C				150A	17	1.1	25	5.0u						Si	S293
56	KHP10	10k	2.5	25A	300			175A	15		25A	5.0u			10k			Si△	
57	SODSLD10	10k	2 5	30A	290			140A	18	2.5	25A	25u			10k			Si△	
58#	P100H	10k	3.0	25A	230	10m		100A	10	3 0 †	25A	10u						Si△	M460
59	SCPH20	10k	5 5	55A	300			150A	20	3.0	25A	110u	200u	100A	10k			Si	M496
60	SCPD40	10k	11	55A	300			150A	20	3.0	25A	110u	200u	100A	10k			Si	M496
61	SCPN40	10k	11	55A	300			150A	20	3.0	25A	110u	200u	100A	10k			Si	M496
62	SCPP40	10k	11	55A	300			150A	20	3.0	25A	110u	200u	100A	10k			Si	M496
63▼	BY187	11k	2 5m	25	500m			85	26	100m	75		4.0u	75	11k			Si	
64	MC213	11k	15m	25	750m	8.0m			19	20m	25	1.5u			11k			Si	A1ks
65	2L110	11k	20m	25	10	8.3m		175	11	20m	25	5.0u	200u	100	11k			Si	A1nd
66▼	SP11	11k	20m	25	3.0	8.3m	500m	150A	12	20m	25	500n	10u	100	11k			Si	A267e
67	MC212	11k	35m	25	1 2	8.0m			14	40m	25	1.5u			11k			Si	A1ks
68	5L110	11k	50m	25	10	8.3m		175	11	50m	25	5.0u	200u	100	11k			Si	A1nd
69	DICR11	11k	80m	50	10	8.3m		150S	19	80m	25	2.0u			11k			Si	A1nj
70	10L110	11k	100m	25	20	8.3m		175	11	100m	25	5.0u	200u	100	11k			Si	A1nd
71	DER11	11k	125m	50	30	8.3m	2.5	150S	19	125	25	2.0u	20u	125	11k			Si	A1nj
72	15L110	11k	150m	25	20	8.3m		175	11	150m	25	5.0u	200u	100	11k			Si	A1nd
73	20L110	11k	200m	25	20	8 3m		175	11	200m	25	5.0u	200u	100	11k			Si	A1nd
74	25L110	11k	250m	25	20	8.3m		175	11	250m	25	5.0u	200u	100	11k			Si	A1nd
75	PS1451	11k†	250m	25A$				175A	32	230m	25A		50u	100A	11k			Si	F13d
76	30L110	11k	300m	25	40	8.3m		175	11	300m	25	5.0u	200u	100	11k			Si	A1nd
77	40L110	11k	400m	25	40	8.3m		175	11	400m	25	5.0u	200u	100	11k			Si	A1nd
78	50L110	11k	500m	25	40	8.3m		175	11	500m	25	5.0u	200u	100	11k			Si	A1nd
79#	HSK866A	11k	550m	45A	55	8.0m		150	12	400m	45	200n		25	11k	20kØ		Si	P10a
80	60L110	11k	600m	25	40	8.3m		175	11	600m	25	5.0u	200u	100	11k			Si	A1nd
81	CP137	11k	750m	50					15		25								M84ay
82	80L110	11k	800m	25	60	8.3m		175	11	800m	25	5.0u	200u	100	11k			Si	A1nd
83	SLD11	11k	900m	25A$	50			125A	23	900m	25A	10u			11k			Si△	
84	100L110	11k	1.0	25	60	8.3m		175	11	1.0	25	5.0u	200u	100	11k			Si	A1nd
85#	HSK872A	11k	1.4	45A	90	8.0m		150	13	1.2	45	200n		25	11k	20kØ		Si	P10
86#	HSK8008	11k	1.4	45A	90	8.0m		150	13	1.2	45	200n		25	11k	20kØ		Si	P10
87	SODSLD11	11k	2.5	25A$	290			140A	22	2.5	25A	25u			11k			Si△	
88	SCPH22	11k	5.5	55A	300			150A	22	3.0	25A	110u	200u	100A	11k			Si	M496
89	A74	12k	2.0m		1.0	10m		100J	40	100m	100J		6.0u	75J	12k			Si	A171g
90#	BY140A	12k	2.5m		1.0	10m		95J	50	100m	100J		10u	75J	12k			Si	A171g
91▼	XX12	12k	5.0m	25	1.0	8.0m		100A	20	5.0m	25	1.0u	30u	100	12k			Si	A83t
92▼	HV5-12	12k	5.0m	40	3.0	8.0m		150A	18	5.0m	25	1.0u	40u	100	12k			Si△	A1td
93▼	HV5-12F	12k	5.0m	40	3.0	8.0m		125A	30	5.0m	25	2.0u	100u	100	12k			Si△	A1td
94	VF5-12	12k†	5.0m	40A	3.0			125A	12	5.0m	25	1.0u	40u	125A	12k			Si△	A83af
95▼	HV10-12	12k	10m	40	3.0	8 0m		150A	18	10m	25	1.0u	40u	100	12k			Si△	A1td
96▼	HV10-12F	12k	10m	40	3.0	8.0m		125A	30	10m	25	2 0u	100u	100	12k			Si△	A1td
97	VF10-12	12k†	10m	40A	3 0			125A	12	10m	25	1 0u	40u	125A	12k			Si△	A83af
98	VG12	12k†	10m	40A	3.0			125A	24	10m	25	1.0u	40u	125A	12k			Si△	A83t
99	LCD12	12k	10m	50	750m			150A	20	10m	25	2.0u	50u	80	12k			Si	A1mb
100	MC215	12k	15m	25	750m	8.0m			21	20m	25	1.5u			12k			Si	A1ks
101	MC1092A	12k	15m	25					16	20m	25	20n							A1kd
102	MC1096	12k	15m	25					30	20m	25	1.0u							A1kd
103	MC1096A	12k	15m	25					30	20m	25	20n							A1kd
104	2L120	12k	20m	25	10	8.3m		175	12	20m	25	5.0u	200u	100	12k			Si	A1nh
105▼	SP12	12k	20m	25	3.0	8.3m	500m	150A	12	20m	25	500n	10u	100	12k			Si	A267e
106#	EDH12	12k	20m	50	10	10		125	12	20m	25	1.0			12k	12k		Si	A83av
107	7715-12	12k	25m	25A	1 5	8.3m		125A	24	25m	25	1.0u	100u	125	12k			Si△	A1kt
108	MC1092	12k	25m	25					16	30m	25	1.0u							A1kd

SYMBOLS AND CODES EXPLAINED IN INTERPRETER

5. RECTIFIERS

IN ORDER OF (1) PIV, (2) MAX AVG FWD CURRENT (3) TEMPERATURE, and (4) TYPE No.

LINE No.	4 TYPE No.	1 PIV (V)	MAX AVG FWD DC CURRENT 2 Io (A)	3 at TEMP (°C)	MAX RATINGS @ 25°C SURGE CUR. PEAK 1 Cy (A)	PULSE WIDTH (s)	DISS. (W)	MAX. TEMP (°C)	MAXIMUM FORWARD VOLTAGE DROP Vf (V)	at If (A)	at TEMP (°C)	MAX. REVERSE CURRENT Ir @25°C & Vr (A)	Ir at T & Vr (A)	TEMP T (°C)	TEST VOLT Vr (V)	AVALANCHE RATINGS MAX V BKDN. (V)	MIN SLOPE (A/V)	MAT.	DESCRIPTION DWG. No.
1▼	HV25-12	12k	25m	40	3.0	8.0m		150A	18	25m	25	1.0u	40u	100	12k			Si△	A1td
2▼	HV25-12F	12k	25m	40	3.0	8.0m		125A	30	25m	25	2.0u	100u	100	12k			Si△	A1td
3	VF25-12	12k†	25m	40A	3.0			125A	12	25m	25	1.0u	40u	125A	12k			Si△	A83af
4#	SH12K	12k	30m	70A	5 0	10m		100S	10	30m	25A	10u	100u	100A	12k			Si△	A168d
5	MC214	12k	35m	25	1 2	8.0m			16	40m	25	1.5u			12k			Si	A1ks
6	1N1147	12k	45m	75	3 5	5.0m		170	60	50m	50		200u	50	12k			Si	F57g
7	5L120	12k	50m	25	10	8.3m		175	12	50m	25	5.0u	200u	100	12k			Si	A1nh
8	HV120E	12k	50m	25	1 0	8.0m	1.9	125A	20	50m	25	1 0u	10m	100	12k			Si	A250
9	MC092	12k	50m	25A$	3.0			150A	12	70m	25A	1.0u			12k			Si	M54g
10	MC092A	12k	50m	25A$	3 0			150A	12	70m	25A	20n			12k			Si	M54g
11	MC096	12k	50m	25A$	3.0			150A	24	60m	25A	1.0u			12k			Si	M54j
12	MC096A	12k	50m	25A$	3.0			150A	24	60m	25A	20n			12k			Si	M54j
13	LB120	12k	60m	40A	5 0	10m		100	16	25m	25A	5.0u			12k			Si△	A1mq
14	1N3464	12k	60m	75A$	15			150S	24	60m	25A	200n			12k			Si	A1qm
15	7701-12A	12k	75m	25	3.0	8.3m		125A	20	50m	25	1.0u	100u	125	12k			Si	A1kt
16	DICR12	12k	75m	50	10	8 3m		150S	20	75m	25	2.0u			12k			Si	A1su
17	HVC1200	12k	75m	55A	2 2			150	22	80m	25				12k			Si	M291m
18	1N3052	12k	100m	25A	8 0			165A	70	100m	25A	10u			12k			Si	A1qr
19	10L120	12k	100m	25	20	8 3m		175	12	100m	25	5 0u	200u	100	12k			Si	A1nh
20#	HSC12	12k	100m	25A$				150A	24	100m	25A	5 0u			12k			Si	A1qr
21	SLA012	12k	100m	25				150	12	100m		10u	100u	100	12k			Si	A1kx
22	SLA12	12k	100m	25	15	8.0m			12	100m	25	10u	100u	100	12k				A1jn
23	DER12	12k	125m	50	20	8 3m	3 0	150S	20	125	25	2.0u	20u	125	12k			Si	A1su
24	15L120	12k	150m	25	20	8 3m		175	12	150m	25	5.0u	200u	100	12k			Si	A1nh
25	US120	12k	150m	25	10	8 3m		150A	21	100m	25	2.0u	100u	100	12k			Si	A1jq
26	A1423PBH10AB1	12k	160m	50A				150A	18	100m	25	5.0u	100u	150A	12k			Si	M212f
27	A1425PBH10AB1	12k	165m	50A				150A	18	100m	25	5.0u	100u	150A	12k			Si	A1ku
28#	HS53	12k	175m	25A	5.0	10m	2 6	150J	14	180m	25A	5.0u	70u	100A	12k			Si	A1ns
29	20L120	12k	200m	25	20	8.3m		175	12	200m	25	5 0u	200u	100	12k			Si	A1nh
30#	ME120	12k	200m	25A	1 5	10m		100A	24	200m†	25	10n			12k			Si△	A1nr
31	NTD12	12k$	200m	25A	10			125A	18 △	200m	25A	1 0u△	100u△	100A	12k			Si△	A1kw
32	PS1452	12k†	230m	25A$				175A	34	200m	25A		50u	100A	12k			Si	F13d
33	A1425MH20AB1	12k	230m	50A				150A	18	100m	25	5.0u	100u	150A	12k			Si	A1ku
34#	05RM120	12k	250m	25A	2 0	1 0		150J	24	250m	25A	500n	30u	100	12k			Si	A83bv
35	25L120	12k	250m	25	20	8.3m		175	12	250m	25	5.0u	200u	100	12k			Si	A1nh
36#	M120K	12k	250m	25A	2 0	1 0		150A	24	250m†	25	500n	30u	100A	12k			Si△	A83bv
37	1N1760	12k	250m	75C$	6.0			150	60	400m	25	25u			12k			Si	F12u
38	30L120	12k	300m	25	40	8 3m		175	12	300m	25	5 0u	200u	100	12k			Si	A1nh
39	CR212	12k	300m	60A	9 0			125A	9 0 ∅	300m	60A	10u△	100u⊘	100	12k			Si△	A83p ∅
40	40L120	12k	400m	25	40	8.3m		175	12	400m	25	5 0u	200u	100	12k			Si	A1nh
41	SC5125	12k	400m	40A$	40 §			175A	16	400m	25A	1 0u	15u	100A	12k			Si	M101
42	50L120	12k	500m	25	40	8.3m		175	12	500m	25	5.0u	200u	100	12k			Si	A1nh
43	KVF12.5	12k	500m	55A	50			175A	17 △	500m	25A	100n△	25u△	100A	12k			Si△	A83bp
44	SCH12500	12k	500m	55A	50			175	17 △	500m	25A	100n△	15u△	100A	12k			Si	A138h
45	1N1700	12k	500m	75A$	3.5			160A	45 ∅	80m		25u△			12k			Si	F12t
46	60L120	12k	600m	25	40	8.3m		175	12	600m	25	5.0u	200u	100	12k			Si	A1nh
47	80L120	12k	800m	25	60	8.3m		175	12	800m	25	5.0u	200u	100	12k			Si	A1nh
48#	EHT1500B	12k	800m	55A	60	2 0m	10	140A	10	800m	25A	10u	100u	140J	10k	18k	20u	Si△	
49	SLD12	12k	900m	25A$	50			125A	25	900m	25A	10u			12k			Si△	
50	100L120	12k	1 0	25	60	8 3m		175	12	1 0	25	5 0u	200u	100	12k			Si	A1pm
51	KV012	12k	1 0	50A	50			150A	18 △	1.0	25A	2 0u△			12k			Si	M462
52	SODSLD12	12k	2 5	25A$	290			140A	24	2.5	25A	25u			12k			Si△	
53	SCPH24	12k	5 5	55A	300			150A	24	3.0	25A	110u	200u	100A	12k			Si	M496
54	SCPD50	12k	11	55A	300			150A	25	3.0	25A	110u	200u	100A	12k			Si	M496
55	SCPN50	12k	11	55A	300			150A	25	3 0	25A	110u	200u	100A	12k			Si	M496
56	SCPP50	12k	11	55A	300			150A	25	3 0	25A	110u	200u	100A	12k			Si	M496
57	MC217	13k	15m	25	750m	8.0m			22	20m	25	1 5u			13k			Si	A1ks
58	2L130	13k	20m	25	10	8.3m		175	13	20m	25	5.0u	200u	100	13k			Si	A1nq
59▼	SP13	13k	20m	25	3 0	8 3m	500m	150A	12	20m	25	500n	10u	100	13k			Si	A267e
60	MC216	13k	35m	25	1 2	8 0m			17	40m	25	1.5u			13k			Si	A1ks
61	5L130	13k	50m	25	10	8.3m		175	13	50m	25	5.0u	200u	100	13k			Si	A1nq
62	DICR13	13k	70m	50	10	8.3m		150S	22	70m	25	2.0u			13k			Si	A1su
63	10L130	13k	100m	25	20	8.3m		175	13	100m	25	5 0u	200u	100	13k			Si	A1nq
64	DER13	13k	125m	50	20	8.3m	3 0	150S	22	125m	25	2.0u	20u	125	13k			Si	A1su
65	15L130	13k	150m	25	20	8.3m		175	13	150m	25	5.0u	200u	100	13k			Si	A1nq
66	20L130	13k	200m	25	20	8 3m		175	13	200m	25	5 0u	200u	100	13k			Si	A1nq
67	PS1453	13k†	230m	25A$				175A	34	200m	25A		50u	100A	13k			Si	F13d
68	25L130	13k	250m	25	20	8 3m		175	13	250m	25	5 0u	200u	100	13k			Si	A1nq
69	30L130	13k	300m	25	40	8 3m		175	13	300m	25	5 0u	200u	100	13k			Si	A1nq
70	40L130	13k	400m	25	40	8.3m		175	13	400m	25	5.0u	200u	100	13k			Si	A1nq
71	50L130	13k	500m	25	40	8 3m		175	13	500m	25	5 0u	200u	100	13k			Si	A1nq
72	60L130	13k	600m	25	40	8 3m		175	13	600m	25	5.0u	200u	100	13k			Si	A1nq
73	80L130	13k	800m	25	60	8.3m		175	13	800m	25	5 0u	200u	100	13k			Si	A1nq
74	100L130	13k	1 0	25	60	8 3m		175	13	1.0	25	5.0u	200u	100	13k			Si	A1nq
75	SCPH26	13k	5.5	55A	300			150A	26	3 0	25A	110u	200u	100A	13k			Si	M496
76	MC219	14k	15m	25	750m	8.0m			24	20m	25	1 5u			14k			Si	A1ks
77	MC1093	14k	15m	25					18	20m	25	1 0u							A1kd
78	MC1093A	14k	15m	25					18	20m	25	20n							A1kd
79	MC1097	14k	15m	25					35	20m	25	1 0u							A1nm
80	MC1097A	14k	15m	25					35	20m	25	20n							A1nm
81	2L140	14k	20m	25	10	8 3m		175	14	20m	25	5.0u	200u	100	14k			Si	A1nu
82	MC218	14k	35m	25	1.2	8 0m			19	40m	25	1 5u			14k			Si	A1ks
83	JAN1N1147	14k	45m	100C$	10	8 3m		125A	45	300m	25	100u	100u§	125	14k			Si	F12u
84	5L140	14k	50m	25	10	8 3m		175	14	50m	25	5.0u	200u	100	14k			Si	A1nu
85	HV140E	14k	50m	25	1 0	8 0m	1.9	125A	20	50m	25	1 0u	10m	100	14k			Si	A250
86	MC093	14k	50m	25A$	3.0			150A	14	60m	25A	1.0u			14k			Si	M54f
87	MC093A	14k	50m	25A$	3 0			150A	14	60m	25A	20n			14k			Si	M54f
88	MC097	14k	50m	25A$	3.0			150A	28	50m	25A	1 0u			14k			Si	M54k
89	MC097A	14k	50m	25A$	3.0			150A	28	50m	25A	20n			14k			Si	M54k
90	1N1148	14k	50m	75	3 5	5 0m		170	52	57m	50		200u	50	14k			Si	F57g
91	DICR14	14k	65m	50	10	8 3m		150S	24	65m	25	2.0u			14k			Si	A1su
92	1N3053	14k	100m	25A	8 0			165A	75	100m	25A	10u			14k			Si	A1qr
93	10L140	14k	100m	25	20	8 3m		175	14	100m	25	5 0u	200u	100	14k			Si	A1nu
94	SLA014	14k	100m	25				150	14	100m		10u	100u	100	14k			Si	A1kx
95	SLA14	14k	100m	25	10	8 0m			14	100m	25	10u	100u	100	14k				A1jn
96	DER14	14k	125m	50	20	8.3m	3 0	150S	24	125m	25	2.0u	20u	125	14k			Si	A1su
97	15L140	14k	150m	25	20	8 3m		175	14	150m	25	5.0u	200u	100	14k			Si	A1nu
98	20L140	14k	200m	25	20	8.3m		175	14	200m	25	5 0u	200u	100	14k			Si	A1nu
99	NTD14	14k$	200m	25A	10			125A	21 △	200m	25A	1.0u△	100u△	100A	14k			Si△	A1mj
100	PS1454	14k†	200m	25A$				175A	38	200m	25A		50u	100A	14k			Si	F13d
101	25L140	14k	250m	25	20	8 3m		175	14	250m	25	5.0u	200u	100	14k			Si	A1nu
102	30L140	14k	300m	25	40	8 3m		175	14	300m	25	5 0u	200u	100	14k			Si	A1nu
103	1N1761	14k	300m	75C$	6.0			150		500m	25	25u			14k			Si	F12u
104	40L140	14k	400m	25	40	8 3m		175	14	400m	25	5 0u	200u	100	14k			Si	A1nu
105	50L140	14k	500m	25	40	8.3m		175	14	500m	25	5.0u	200u	100	14k			Si	A1nu
106	60L140	14k	600m	25	40	8 3m		175	14	600m	25	5 0u	200u	100	14k			Si	A1nu
107	80L140	14k	800m	25	60	8 3m		175	14	800m	25	5.0u	200u	100	14k			Si	A1nu
108	100L140	14k	1 0	25	60	8 3m		175	14	1.0	25	5.0u	200u	100	14k			Si	A1nu
109	SCPH28	14k	5 5	55A	300			150A	28	3 0	25A	110u	200u	100A	14k			Si	M496
110	BY140	15k	2 5m	25	1 0	10m		95J	50	100m	100J		10n	75J	15k			Si	Z3

SYMBOLS AND CODES EXPLAINED IN INTERPRETER

5. RECTIFIERS

IN ORDER OF (1) PIV, (2) MAX AVG FWD CURRENT (3) TEMPERATURE, and (4) TYPE No.

LINE No.	TYPE No. [4]	PIV [1] (V)	MAX AVG FWD DC CURRENT Io [2] (A)	at TEMP [3] (°C)	MAX RATINGS @ 25°C SURGE CUR. PEAK 1 Cy (A)	PULSE WIDTH (s)	DISS. (W)	MAX. TEMP (°C)	MAXIMUM FORWARD VOLTAGE DROP Vf (V)	at If (A)	at TEMP (°C)	MAX. REVERSE CURRENT Ir @25°C & Vr (A)	Ir at T & Vr (A)	TEMP T (°C)	TEST VOLT Vr (V)	AVALANCHE RATINGS MAX V BKDN. (V)	MIN SLOPE (A/V)	DESCRIPTION MAT.	DWG. No.
1#	BY176	15k	2 5m	25	250m			95J	35	100m	95J		7 0u	75J	15k			Si	A1js
2▼	XX15	15k	5 0m	25	1.0	8 0m		100A	20	5 0m	25	1 0u	30u	100	15k			Si	A83t
3▼	HV5-15	15k	5.0m	40	3.0	8 0m		150A	35	5 0m	25	1.0u	40u	100	15k			Si△	A1te
4▼	HV5-15F	15k	5.0m	40	3.0	8 0m		125A	60	5.0m	25	2 0u	100u	100	15k			Si△	A1te
5	VF5-15	15k†	5m	40A	3 0			125A	35	5m	25	1 0u	40u	125A	15k			Si△	A83bg
6	SCMS15K	15k	5m	55A	2 0	8 3m		150A	45	10m	25A	100n△	2u△	100A	15k			Si	A1sg
7	KLR15	15k	10m	25	5 0			150S	13 2 §△	10m†	25	2 0u△	100u	70	15k	18kØ		Si	A1kz
8	1N5324	15k	10m	40A	75 §			125A	24	10m	50A		25u△	50A	15k			Si	A1kt
9▼	HV10-15	15k	10m	40	3 0	8.0m		150A	35	10m	25	1.0u	40u	100	15k			Si△	A1te
10▼	HV10-15F	15k	10m	40	3 0	8.0m		125A	60	10m	25	2.0u	100u	100	15k			Si△	A1te
11	VF10-15	15k†	10m	40A	3.0			125A	35	10m	25	1.0u	40u	125A	15k			Si△	A83bg
12	VG15	15k†	10m	40A	3 0			125A	30	10m	25	1.0u	40u	125A	15k			Si△	A83t
13	LCD15	15k	10m	50A	.75			150A	20	10m	25A	2.0u	50u	80A	15k			Si	A1kt
14▼	SL15	15k	10m	55A	3.0	8 3m	2 0	150A	24	10m	25	100n	20u	100	15k			Si	A267a
15	MC221	15k	15m	25	75	8.0m			25	20m	25	1.5u			15k			Si	A1ks
16	2L150	15k	20m	25	10	8.3m		175	15	20m	25	5 0u	20u	100	15k			Si	A1pb
17	KL15	15k	20m	25	5 0			150S	13 2 §△	20m†	25	1.0u△	50u	100	15k	18kØ		Si	A1kz
18	7715-15	15k	25m	25A	1.5	8 3m		125A	30	25m	25	1 0u	10u	125	15k			Si△	A1kt
19▼	HV25-15	15k	25m	40	3 0	8 0m		150A	35	25m	25	1 0u	40u	100	15k			Si△	A1te
20▼	HV25-15F	15k	25m	40	3 0	8 0m		125A	60	25m	25	2.0u	100u	100	15k			Si△	A1te
21	VF25-15	15k†	25m	40A	3.0			125A	35	25m	25	1 0u	40u	125A	15k			Si△	A83bg
22	MC220	15k	35m	25	1.2	8 0m			20	40m	25	1.5u			15k			Si	A1ks
23	5L150	15k	50m	25	10	8 3m		175	15	50m	25	5 0u	200u	100	15k			Si	A1pb
24#	HS403	15k$	50m	25A	5 0	10m		150A	50	50m	25A	1.0u	20u	100A	15k			Si△	A1my
25#	HS403B	15k$	50m	25A	5.0	10m		100A	50	50m	25A	50u	100u	100A	15k			Si△	A1my
26	PS1132	15k	50m	25	2.0	8 0m		175	35	50m	25	25u			15k				A1nh
27	SCHJ15K	15k	50m	55A	4 0			150	20 △	50m	25	.10u△	25u△	100A	15k			Si	A138d
28▼	SM15	15k	50m	55A	4 0	8 3m	2.5	150A	24	50m	25	100n	25u	100	15k			Si	A267a
29	CP140	15k	50m	75					20		25				15k				M84ba
30	DICR15	15k	60m	50	10	8 3m		150S	25	60m	25	2 0u			15k			Si	A1su
31	7701-15A	15k	75m	25	3 0	8 3m		125A	24	50m	25	1 0u	100u	125	15k			Si△	A1kt
32	HVC1500	15k	75m	55A	2 2	8.3m		150	25	80m	25	10u			15k			Si	M291n
33	10L150	15k	100m	25	20	8.3m		175	15	100m	25	5 0u	200u	100	15k			Si	A1pb
34	BCD15	15k	100m	25A	10			125A	20	100m	25A	2 0u	100u	100A	15k			Si	A1ma
35#	HSC15	15k	100m	25A$				150A	30	100m	25A	5 0u			15k			Si	A1qr
36#	RV15	15k	10	25A	2.5	10m		125A	20	10 †	25A	10u	500u	100A	15k			Si△	M327
37#	RW15	15k	10	25A	2.5	10m		125A	20	.10 †	25A	10u	500u	100A	15k			Si△	M327a
38	US150	15k	100m	25	10	8 3m		150A	26	100m	25	2 0u	100u	100	15k			Si	A1jq
39	DI5150LS	15k	100m	50A	40	8 0m		125	20	100m	25A	5.0u			15k			Si	M92
40	DER15	15k	120m	50	20	8.3m	3.0	150S	25	120m	25	2 0u	20u	125	15k			Si	A1su
41	15L150	15k	150m	25	20	8 3m		175	15	150m	25	5.0u	200u	100	15k			Si	A1pb
42	CFR15	15k	150m	25	10			100A	13.2 §△	150m†	25	2 0u△	100u	100	15k	18kØ		Si	F12w
43	CLR15	15k	150m	25	10			100A	13.2 §△	150m†	25	2 0u△	100u	100	15k	18kØ		Si	A1kz
44#	HS54	15k	175m	25A	5 0	10m	2 6	150J	14	180m	25A	5 0u	100u	100A	15k			Si	A1ns
45	20L150	15k	200m	25	20	8 3m		175	15	200m	25	5.0u	200u	100	15k			Si	A1pb
46	8150C	15k	200m	25	50	8.0m		150	16	200m	25	5 0u	25u	100	15k			Si△	M519d
47	CF15	15k	200m	25	10			125A	13 2 §△	200m†	25	1.0u△	50u	100	15k	18kØ		Si	F12w
48	CL15	15k	200m	25	10			125A	13.2 §△	200m†	25	1 0u△	50u	100	15k	18kØ		Si	A1kz
49	PS1455	15k†	200m	25A$				175A	38	200m	25A		50u	100A	15k			Si	F13d
50#	RX15	15k	200m	25A	2.5	10m		125A†	20	200m†	25	1 0u			15k			Si△	M327
51#	RY15	15k	200m	25A	2 5	10m		125A†	20	200m†	25	1 0u			15k			Si△	M327a
52	DI8150C	15k	200m	40A	50	8 3m		150J	16	200m	25	5 0u	25u	100	15k			Si	C42r
53	25L150	15k	250m	25	20	8 3m		175	15	250m	25	5 0u	200u	100	15k			Si	A1pb
54#	M150K	15k	250m	25A	2 0	1.0		150A	30	250m†	25	500n	30u	100A	15k			Si△	A83bv
55	SLDHV15	15k	250m	25A	22			175A	30		25							Si	M239q
56	30L150	15k	300m	25	40	8.3m		175	15	300m	25	5 0u	200u	100	15k			Si	A1pb
57	SC5150	15k	300m	40A$	30 §			175A	19	300m	25A	1 0u	15u	100A	15k			Si	M101
58	40L150	15k	400m	25	40	8 3m		175	15	400m	25	5.0u	200u	100	15k			Si	A1pb
59	1N5598	15k	470m	100C	30		7.0kØ	150C	23	470m	100C		300u	100C	15k			Si	S221
60#	1RM150	15k	500m	25A	12	10m		150A	28	1.0	25A	500n			15k			Si	M62g
61	50L150	15k	500m	25	40	8 3m		175	15	500m	25	5.0u	200u	100	15k			Si	A1pb
62#	D150H	15k	500m	25A	30	10m		100A†	30	500m†	25	500n			15k			Si△	M62
63	SLD75	15k	500m	25A	50			175A	125		25							Si	M239m
64#	HSKE10000/4500-.4	15k	500m	45A	55	8.0m	14kØ	150A	18	3 0	25J					30kØ		Si	A167m
65	KVF15	15k	500m	55A	50			175A	20 △	500m	25A	100n△	25u△	100A	15k			Si△	A83br
66	SCH15000	15k	500m	55A	50			175	20 △	500m	25A	100n	15u△	100A	15k			Si	A138n
67	CP141	15k	500m	75					20		25				15k			Si	M84bb
68	CP143	15k	500m	75					20		25								M84bd
69	60L150	15k	600m	25	40	8 3m		175	15	600m		5.0u	200u	100	15k			Si	A1pb
70	80L150	15k	800m	25	60	8.3m		175	15	800m		5 0u	200u	100	15k			Si	A1pb
71	SLD15	15k	900m	30A	50			125A	30	900m	25A	10u			15k			Si△	M239g
72	KVP15	15k$	900m	50A	50			150A	21 △	900m	25A	5.0u△			15k			Si△	M239g
73	100L150	15k	1.0	25	60	8.3m		175	15	1.0		5 0u	200u	100	15k			Si	A1pb
74#	F150H	15k	1.0	25A	70	10m		100A†	30	1 0 †	25		10m	25A	15k			Si△	M62
75#	F150HL	15k	1.0	25A	30	10m		100A	22	1.0 †	25A	2.0u						Si△	M62
76	SC10150	15k	1 0	40A$	200 §			175A	20	1 0	25A	800u	1 0m	100A	15k			Si	M280b
77#	HSKE10000/4500-1.2	15k	1 4	45A	90	8 0m	28kØ	150A	21	8.0	25J					30kØ		Si	A167u
78	2ASLD15	15k	1.5	25A	200			175A	25		25							Si	M239g
79	2ASLD15TR	15k	1 5	55$														Si	M240b
80	S5449	15k	1.5	100A				100A										Si	M65b
81	CP138	15k	1.75	50					20		25								M84az
82	CP139	15k	1.75	50					20		25								M84by
83	S575A	15k	1.75	50C	250	8.3m		150C	20	3.0	25C	10u	200m	100C	15k			Si	M240f
84	S673	15k	1.75	50C	250	8 3m		150C	20	3.0	25C	10u	200m	100C	15k				M240g
85♦	SCHS15000	15k	2.0	55	150			175A	30	1.0	25	10u	120u	100	15k			Si	A138v
86	KHP15	15k	2.5	25A	300			175A	21		25A				15k			Si△	
87	SODSLD15	15k	2.5	30A	290			140A	30	2.5	25A	25u			15k			Si△	
88#	HSK869B	15k	2.5	45A	100	100m		150	19	2 5						30kØ		Si	P11
89	CP142	15k	2.5	50					20		25								M84bc
90	SCPH30	15k	5 5	55A	300			150A	30	3.0	25A	110u	200u	100A	15k			Si	M496
91	MC223	16k	15m	25	.50	8 0m			27	20m	25	1.5u			16k			Si	A1ks
92	MC1094	16k	15m	25					20	20m	25	1.0u							A1mj
93	MC1094A	16k	15m	25					20	20m	25	20n							A1mj
94	MC1098	16k	15m	25					40	20m	25	1.0u							A1nm
95	MC1098A	16k	15m	25					40	20m	25	20n							A1nm
96	2L160	16k	20m	25		8 3m		175	16	20m	25	5.0u	200u	100	16k			Si	A1pg
97	MC222	16k	35m	25	1.0	8.0m			22	40m	25	1.5u			16k			Si	A1ks
98	1N1149	16k	45m	75	3 5	5.0m		170	60	50m	50		200u	50	16k			Si	F57g
99	5L160	16k	50m	25	10	8.3m		175	16	50m	25	5.0u	200u	100	16k			Si	A1pg
100	HV160E	16k	50m	25	1 0	8.0m	1.9	125A	20	50m	25	1.0u	10m	100	16k			Si	A250
101	MC094	16k	50m	25A$	3 0			150A	16	60m	25A	1.0u			16k			Si	M54m
102	MC094A	16k	50m	25A$	3.0			150A	16	60m	25A	20n			16k			Si	M54m
103	MC098	16k	50m	25A$	3.0			150A	32	100m	25A	1.0u			16k			Si	M54l
104	MC098A	16k	50m	25A$	3 0			150A	32	100m	25A	20n			16k			Si	M54l
105	1N3054	16k	100m	25A	8.0			165A	80	100m	25A	10u			16k			Si	A1rg
106	10L160	16k	100m	25	20	8.3m		175	16	100m	25	5.0u	200u	100	16k			Si	A1pg
107	SLA016	16k	100m	25				150	16	100m		10u	100u	100	16k			Si	A1mx
108	SLA16	16k	100m	25	10	8.0m			16	100m	25	10u	100u	100	16k				A1jn

SYMBOLS AND CODES EXPLAINED IN INTERPRETER

5. RECTIFIERS

IN ORDER OF (1) PIV, (2) MAX AVG FWD CURRENT (3) TEMPERATURE, and (4) TYPE No.

LINE No	4 TYPE No	1 PIV (V)	MAX AVG FWD DC CURRENT 2 Io (A)	3 at TEMP (°C)	MAX RATINGS @ 25°C SURGE CUR. PEAK 1 Cy (A)	PULSE WIDTH (s)	DISS. (W)	MAX. TEMP (°C)	MAXIMUM FORWARD VOLTAGE DROP Vf (V)	at If (A)	at TEMP (°C)	MAX. REVERSE CURRENT Ir @25°C & Vr (A)	Ir at T & Vr (A)	TEMP T (°C)	TEST VOLT Vr (V)	AVALANCHE RATINGS MAX V BKDN. (V)	MIN SLOPE (A/V)	MAT.	DESCRIPTION DWG. No.
1	CP144	16k	100m	75					20		25								M84be
2	15L160	16k	150m	25	20	8 3m		175	16	150m	25	5.0u	200u	100	16k			Si	A1pg
3#	SMH16	16k	150m	50	15	10m		80	20	150m	25	1.0m		25	16k			Si	M423
4#	SMHD16	16k	150m	50	15	10m		80	20	150m	25	1.0m		25	16k			Si	M424a
5	20L160	16k	200m	25	20	8.3m		175	16	200m	25	5.0u	200u	100	16k			Si	A1pg
6	NTD16	16k$	200m	25A	10			125A	24 Δ	200m	25A	1.0uΔ	100uΔ	100A	16k			SiΔ	A1mv
7	PS1456	16k†	200m	25A$				175A	38	200m	25A		50u	100A	16k			Si	F13d
8	CP145	16k	200m	75					20		25								M84bf
9	25L160	16k	250m	25	20	8.3m		175	16	250m	25	5.0u	200u	100	16k			Si	A1pg
10	1N1762	16k	250m	100C$	6 0			150	60	400m	25	25u			16k			Si	F12u
11	30L160	16k	300m	25	40	8 3m		175	16	300m	25	5.0u	200u	100	16k			Si	A1pg
12#	HS33	16k	350m	25A	30	10m		150A	34	350m	25A	5.0u	65u	100A	16k			Si	F12
13#	HS43A	16k	350mØ	25A	2.8 †			150A	34	350m	25A	5.0u	65u	100A	16k			SiΔ	F12c
14#	HX33	16k	350m	35A	30	10m		150A	35	350m	25A	5 0u	70u	100A	16k			Si	A1qk
15	40L160	16k	400m	25	40	8 3m		175	16	400m	25	5.0u	200u	100	16k			Si	A1pg
16	50L160	16k	500m	25	40	8.3m		175	16	500m	25	5.0u	200u	100	16k			Si	A1pg
17#	SWH2-16	16k	500m	50	45	10m		80	20	500m	25	1.0m		25	16k			Si	M423b
18#	SWHD3-16	16k	500m	50	45	10m		80	20	500m	25	1.0m		25	16k			Si	M424
19	60L160	16k	600m	25	40	8.3m		175	16	600m	25	5.0u	200u	100	16k			Si	A1pg
20#	EHT1700B	16k	750m	55A	60	2.0m	14	140A	14	800m	25A	10u	100u	140J	14k	25k	14u	SiΔ	
21	80L160	16k	800m	25	60	8 3m		175	16	800m	25	5.0u	200u	100	16k			Si	A1pg
22	100L160	16k	1 0	25	60	8.3m		175	16	1.0	25	5.0u	200u	100	16k			Si	A1pg
23	SCPH32	16k	5.5	55A	300			150A	32	3 0	25A	110u	200u	100A	16k			Si	M496
24	MC225	17k	15m	25	500m	8 3m			28	20m	25	1.5u			17k			Si	A1ms
25	2L170	17k	20m	25	10	8 3m		175	17	20m	25	5 0u	200u	100	17k			Si	A1pm
26	MC224	17k	35m	25	1 0	8.3m			23	40m	25	1.5u			17k			Si	A1ms
27	5L170	17k	50m	25	10	8.3m		175	17	50m	25	5.0u	200u	100	17k			Si	A1pm
28	10L170	17k	100m	25	20	8 3m		175	17	100m	25	5.0u	200u	100	17k			Si	A1pm
29	15L170	17k	150m	25	20	8 3m		175	17	150m	25	5.0u	200u	100	17k			Si	A1pm
30	20L170	17k	200m	25	20	8.3m		175	17	200m	25	5.0u	200u	100	17k			Si	A1pm
31	PS1457	17k†	200m	25A$				175A	38	200m	25A		50u	100A	17k			Si	F13d
32	CP146	17k	200m	75					22		25			100					M84bg
33	25L170	17k	250m	25	28	8.3m		175	17	250m	25	5 0u	200u	100	17k			Si	A1pm
34	30L170	17k	300m	25	40	8 3m		175	17	300m	25	5.0u	200u	100	17k			Si	A1pm
35	40L170	17k	400m	25	40	8.3m		175	17	400m	25	5.0u	200u	100	17k			Si	A1pm
36	50L170	17k	500m	25	40	8 3m		175	17	500m	25	5.0u	200u	100	17k			Si	A1pm
37	60L170	17k	600m	25	40	8.3m		175	17	600m	25	5.0u	200u	100	17k			Si	A1pm
38	80L170	17k	800m	25	60	8.3m		175	17	800m	25	5 0u	200u	100	17k			Si	A1pm
39	100L170	17k	1 0	25	60	8 3m		175	17	1 0	25	5.0u	200u	100	17k			Si	A1pm
40	SCPH34	17k	5.5	55A	300			150A	34	3 0	25A	110u	200u	100A	17k			Si	M496
41	MC227	18k	15m	25	500m	8 0m			30	20m	25	1 5u			18k			Si	A1ms
42	2L180	18k	20m	25	10	8 3m		175	18	20m	25	5.0u	200u	100	18k			Si	A1pn
43	7715-18	18k	25m	25A	1 5	8.3m		125A	36	25m	25	1 0u	100u	125	18k			SiΔ	A1kt
44	MC226	18k	35m	25	1.0	8 0m			25	40m	25	1.5u			18k			Si	A1ms
45	5L180	18k	50m	25	10	8 3m		175	18	50m	25	5.0u	200u	100	18k			Si	A1pn
46	HV180E	18k	50m	25	1.0	8.0m	1 9	125A	20	50m	25	1 0u	10m	100	18k			Si	A250
47	LC180	18k	60m	40A	5 0	10m		100	24	25m	25A	5.0u			18k			SiΔ	A1pd
48	7701-18A	18k	75m	25	3.0	8.3m		125A	28	50m	25	1.0u	100u	125	18k			SiΔ	A1kt
49	HVC1800	18k	75m	55A	2 2			150	30	80m	25	10u			18k			Si	M291p
50	US180	18k	80m	25	10	8 3m		150A	31	100m	25	2.0u	100u	100	18k			Si	A1jq
51	1N3055	18k	100m	25A	8 0			165A	85	100m	25A	10u			18k			Si	A1rg
52	10L180	18k	100m	25	20	8 3m		175	18	100m	25	5 0u	200u	100	18k			Si	A1pn
53	HSC18	18k	100m	25A$				150A	36	100m	25A	5.0u			18k			Si	A1ge
54	SLA018	18k	100m	25				150	18	100m		10u	100u	100	18k			Si	A1mx
55	SLA18	18k	100m	25	10	8.0m			18	100m	25	10u	100u	100	18k				A1mw
56	15L180	18k	150m	25	20	8 3m		175	18	150m	25	5.0u	200u	100	18k			Si	A1pn
57	20L180	18k	200m	25	20	8.3m		175	18	200m	25	5 0u	200u	100	18k			Si	A1pn
58	NTD18	18k$	200m	25A	10			125A	27 Δ	200m	25A	1.0uΔ	100uΔ	100A	18k			SiΔ	A1nm
59	PS1458	18k†	200m	25A$				175A	38	200m	25A		50u	100A	18k			Si	F13d
60	25L180	18k	250m	25	20	8 3m		175	18	250m	25	5 0u	200u	100	18k			Si	A1pn
61	30L180	18k	300m	25	40	8 3m		175	18	300m	25	5.0u	200u	100	18k			Si	A1pn
62	40L180	18k	400m	25	40	8 3m		175	18	400m	25	5.0u	200u	100	18k			Si	A1pn
63	50L180	18k	500m	25	40	8.3m		175	18	500m	25	5 0u	200u	100	18k			Si	A1pn
64	60L180	18k	600m	25	40	8 3m		175	18	600m	25	5 0u	200u	100	18k			Si	A1pn
65	80L180	18k	800m	25	60	8.3m		175	18	800m	25	5.0u	200u	100	18k			Si	A1pn
66	100L180	18k	1 0	25	60	8 3m		175	18	1.0	25	5.0u	200u	100	18k			Si	A1pn
67	SCPH36	18k	5 5	55A	300			150A	36	3 0	25A	110u	200u	100A	18k			Si	M496
68	MC229	19k	15m	25	500m	8.0m			31	20m	25	1.5u			19k			Si	A1ms
69	2L190	19k	20m	25	10	8 3m		175	19	20m	25	5.0u	200u	100	19k			Si	A1pu
70	MC228	19k	35m	25	1 0	8.0m			26	40m	25	1 5u			19k			Si	A1ms
71	JAN1N1149	19k	.045	100C$	10	8 3m		125A	45	.30	25	100u	.10m§	125	19k			Si	F12u
72	5L190	19k	50m	25	10	8 3m		175	19	50m	25	5.0u	200u	100	19k			Si	A1pu
73	10L190	19k	100m	25	20	8.3m		175	19	100m	25	5.0u	200u	100	19k			Si	A1pu
74	15L190	19k	150m	25	20	8.3m		175	19	150m	25	5.0u	200u	100	19k			Si	A1pu
75	20L190	19k	200m	25	20	8 3m		175	19	200m	25	5.0u	200u	100	19k			Si	A1mp
76	PS1459	19k†	200m	25A$				175A	38	200m	25A		50u		19k			Si	F13a
77	25L190	19k	250m	25	20	8 3m		175	19	250m	25	5.0u	200u		19k			Si	A1pu
78	CP147	19k	250m	75					24		25								M84bh
79	S5367	19k	250m	100A				100A										Si	M66
80	30L190	19k	300m	25	40	8.3m		175	19	300m	25	5.0u	200u	100	19k			Si	A1pu
81	40L190	19k	400m	25	40	8.3m		175	19	400m	25	5 0u	200u	100	19k			Si	A1pu
82	50L190	19k	500m	25	40	8.3m		175	19	500m	25	5 0u	200u	100	19k			Si	A1pu
83	60L190	19k	600m	25	40	8.3m		175	19	600m	25	5.0u	200u	100	19k			Si	A1pu
84#	EHT1750B	19k	750m	55A	60	2 0m	16	140A	16	800m	25A	10u	100u	140J	16k	29k	12u	SiΔ	
85	80L190	19k	800m	25	60	8 3m		175	19	800m	25	5.0u	200u	100	19k			Si	A1pu
86	100L190	19k	1 0	25	60	8 3m		175	19	1 0	25	5 0u	200u	100	19k			Si	A1pu
87	SCPH38	19k	5.5	55A	300			150A	38	3.0	25A	110u	200u	100A	19k			Si	M496
88▼	XX20	20k	5 0m	25	1 0	8 0m		100A	40	5 0m	25	1.0u	30u	100	20k			Si	A83bg
89▼	HV5-20	20k	5.0m	40	3.0	8 0m		150A	35	5.0m	25	1.0u	40u	100	20k			SiΔ	A1te
90▼	HV5-20F	20k	5 0m	40	3 0	8 0m		125A	60	5 0m	25	2.0u	100u	100	20k			SiΔ	A1te
91	VF5-20	20k†	5.0m	40A	3.0			125A	35	5 0m	25	1 0u	40u	125A	20k			SiΔ	A83bg
92	SCMS20K	20k	5 0m	55A	2 0	8.3m		150A	60	10m	25A	100nΔ	20uΔ	100A	20k			Si	A1sp
93	KLR20	20k	10m	25	5 0			150S	17.6 §Δ	10m†	25	2 0uΔ	100u	70	20k	24kØ		Si	A1na
94▼	HV10-20	20k	10m	40	3 0	8 0m		150A	35	10m	25	1.0u	40u	100	20k			SiΔ	A1te
95▼	HV10-20F	20k	10m	40	3 0	8 0m		125A	60	10m	25	2 0u	100u	100	20k			SiΔ	A1te
96	VF10-20	20k†	10m	40A	3.0			125A	35	10m	25	1.0u	40u	125A	20k			SiΔ	A83bg
97	VG20	20k†	10m	40A	3.0			125A	40	10m	25	1.0u	40u	125A	20k			SiΔ	A83t
98	LCD20	20k	10m	50	750m			150A	24	10m	25	2.0u	50u	80	20k			Si	A1nm
99▼	SL20	20k	10m	55A	3 0	8 3m	2.0	150A	24	10m	25	100n	20u	100	20k			Si	A267a
100	MC231	20k	15m	25	500m	8 0m			33	20m	25	1.5u			20k			Si	A1ms
101	2L200	20k	20m	25	10	8.3m		175	20	20m	25	5.0u	200u	100	20k			Si	A1rn
102	KL20	20k	20m	25	5 0			150S	17.6 §Δ	20m†	25	1 0uΔ	50u	100	20k	24kØ		Si	A1na
103	7715-20	20k	25m	25A	1.5	8.3m		125A	40	25m	25	1.0u	100u	125	20k			SiΔ	A1kt
104▼	HV25-20	20k	25m	40	3 0	8 0m		150A	35	25m	25	1 0u	40u	100	20k			SiΔ	A1te
105▼	HV25-20F	20k	25m	40	3 0	8 0m		125A	60	25m	25	2.0u	100u	100	20k			SiΔ	A1te
106	VF25-20	20k†	25m	40A	3 0			125A	35	25m	25	1.0u	40u	125A	20k			SiΔ	A83bg
107	MC230	20k	35m	25	1.0	8 0m			28	40m	25	1.5u			20k			Si	A1ms
108	1N2139	20k	45m	75A$	6 0			170S	60	80m	25	25u			20k			Si	F57
109	5L200	20k	50m	25	10	8 3m		175	20	50m	25	5.0u	200u	100	20k			Si	A1pw
110#	HS404	20k$	50m	25A	5.0	10m		150A	50	50m	25A	1 0u	20u	100A	20k			SiΔ	A1mv

SYMBOLS AND CODES EXPLAINED IN INTERPRETER

5. RECTIFIERS

IN ORDER OF (1) PIV, (2) MAX AVG FWD CURRENT (3) TEMPERATURE, and (4) TYPE No.

LINE No.	4 TYPE No.	1 PIV (V)	MAX AVG FWD DC CURRENT 2 Io (A)	3 at TEMP (°C)	MAX RATINGS @ 25°C SURGE CUR. PEAK 1 Cy (A)	PULSE WIDTH (s)	DISS. (W)	MAX. TEMP (°C)	MAXIMUM FORWARD VOLTAGE DROP Vf (V)	at If (A)	at TEMP (°C)	MAX. REVERSE CURRENT Ir @25°C & Vr (A)	Ir at T & Vr (A)	TEMP T (°C)	TEST VOLT Vr (V)	AVALANCHE RATINGS MAX V BKDN. (V)	MIN SLOPE (A/V)	MAT.	DESCRIPTION DWG. No.
1	HV200E	20k	50m	25	1 0	8.0m	1 9	125A	20	50m	25	1.0u	10m	100	20k			Si	A250
2▼	SM20∅	20k	50m	55A	4.0	8 3m	2 5	150A	30	50m	25	100n	25u	100	20k			Si	A267a
3	CP148	20k	50m	75					24		25								M84bj
4	CP149	20k	50m	75					24		25								M84bk
5	DI5200LS	20k	60m	50A	40	8.0m		125	26	60m	25A	5.0u			20k			Si	M91
6	7701-20B	20k	75m	25	3.0	8.3m		125A	30	50m	25	1.0u	100u	125	20k			Si∆	A1kt
7	CP150	20k	75m	75					24		25								M84bm
8	US200	20k	80m	25	10	8.3m		150A	34	100m	25	2.0u	100u	100	20k			Si	A1jq
9	1N3056	20k	100m	25A	8.0			165A	90	100m	25A	10u			20k			Si	A1rq
10	10L200	20k	100m	25	20	8.3m		175	20	100m	25	5.0u	200u	100	20k			Si	A1pw
11	BCD20	20k	100m	25A	10			125A	26	100m	25A	2.0u	100u	100A	20k			Si	A1nb
12#	HSC20	20k	100m	25A$				150A	40	100m	25A	5.0u			20k			Si∆	A1ge
13	SLA020	20k	100m	25				150	20	100m		10u	100u	100	20k			Si	A1mx
14	15L200	20k	150m	25	20	8.3m		175	20	150m	25	5.0u	200u	100	20k			Si	A1pw
15	CFR20	20k	150m	25	10			100A	17.6 §∆	150m†	25	2.0u∆	100u	100	20k	24kØ		Si	F12x
16	CLR20	20k	150m	25	10			100A	17.6 §∆	150m†	25	2.0u∆	100u	100	20k	24kØ		Si	A1na
17	20L200	20k	200m	25	20	8.3m		175	20	200m	25	5.0u	200u	100	20k			Si	A1pw
18	CF20	20k	200m	25	10			125A	17.6 §∆	200m†	25	1.0u∆	50u	100	20k	24kØ		Si	F12x
19	CL20	20k	200m	25	10			125A	17 6 §∆	200m†	25	1.0u∆	50u	100	20k	24kØ		Si	A1na
20#	ME200	20k	200m	25A	2.5	10m		125A	24	200m†	25A	10u						Si∆	A1hw
21	NTD20	20k$	200m	25A	10			125A	30 ∆	200m	25A	1.0u∆	100u∆	100A	20k			Si∆	A1nw
22	PS1460	20k†	200m	25A$				175A	38	200m	25A		50u	100A	20k			Si	F13d
23	25L200	20k	250m	25	20	8.3m		175	20	250m	25	5.0u	200u	100	20k			Si	A1pw
24#	M200K	20k	250m	25A	2.0	10m		150A	40	250m†	25A	1.0u	50u	100A	20k			Si∆	A83k
25	SLDHV20	20k	250m	25A	22			175A	39		25							Si	M239h
26	SC5200	20k	250m	40A$	25 §			175A	25	250m	25A	1.0u	15u	100A	20k			Si	M101
27	30L200	20k	300m	25	40	8 3m		175	20	300m	25	5.0u	200u	100	20k			Si	A1pw
28	40L200	20k	400m	25	40	8.3m		175	20	400m	25	5.0u	200u	100	20k			Si	A1pw
29	50L200	20k	500m	25	40	8 3m		175	20	500m	25	5.0u	200u	100	20k			Si	A1pw
30#	D200H	20k	500m	25A	30	10m		100A	21	500m†	25A	1.0u						Si∆	M62
31#	D200HL	20k	500m	25A	30	10m		100A	29	500m†	25A	1.0u						Si∆	M62
32#	HSKE14000/6300-.4	20k	500m	45A	55	8.0m	19kØ	150A	24	3.0	25J					40kØ		Si	A167n
33#	SWHD3-20	20k	500m	50	45	10m		80	20	500m	25	1.0m		25	20k			Si	M424
34	KVF20	20k	500m	55A	50			175A	27 ∆	500m	25A	100n∆	25u∆	100A	20k			Si∆	A83bw
35	SCH20000	20k	500m	55A	50			175	27 ∆	500m	25A		15u∆	100A	20k			Si	A138q
36	60L200	20k	600m	25	40	8 3m		175	20	600m	25	5 0u	200u	100	20k			Si	A1pw
37	HVC20	20k	600m	75C$	16			150C	40	600m		2.0u	50u	100C	20k			Si	Z1
38	SLD20	20k	750m	30A	50			125A	40	750m	25A	10u			20k			Si	M239h
39	KVP20	20k$	750m	50A	50			150A	28 ∆	750m	25A	5.0u∆			20k			Si∆	M239h
40	80L200	20k	800m	25	60	8.3m		175	20	800m	25	5.0u	200u	100	20k			Si	A1pw
41	100L200	20k	1.0	25	60	8.3m		175	20	1.0	25	5.0u	200u	100	20k			Si	A61a
42#	F200H	20k	1 0	25A	30	10m		100A	21	1 0 †	25A	2.0u						Si∆	M62
43#	F200HL	20k	1.0	25A	30	10m		100A	29	1 0 †	25A	2.0u						Si∆	M62
44	2ASLD20	20k	1.3	25A	200			175A	34									Si	M239h
45	SODSLD20	20k	2.2	30A	290			140A	40	2.3	25A	25u			20k			Si∆	
46	KHP20	20k	2 25	25A	300			175A	28		25A	5.0u			20k			Si∆	
47#	P200H	20k	3.0	25A	230	10m		100A	22	3.0 †	25A	10u						Si∆	M460a
48	SCPH40	20k	5.5	55A	300			150A	40	3 0	25A	110u	200u	100A	20k			Si	M496
49▼#	1S2237	21k	3.0m	25A	3.0			125J	30	100m	25A	2.5u			21k			Si	
50	2L210	21k	20m	25	10	8.3m		175	21	20m	25	5.0u	200u	100	21k			Si	A1qa
51	5L210	21k	50m	25	10	8 3m		175	21	50m	25	5.0u	200u	100	21k			Si	A1qa
52	HVC2100	21k	50m	55A	1 5			150	35	50m	25	10u			21k			Si	M291q
53	10L210	21k	100m	25	20	8.3m		175	21	100m	25	5.0u	200u	100	21k			Si	A1qa
54	15L210	21k	150m	25	20	8.3m		175	21	150m	25	5.0u	200u	100	21k			Si	A1qa
55	20L210	21k	200m	25	20	8.3m		175	21	200m	25	5.0u	200u	100	21k			Si	A1qa
56	25L210	21k	250m	25	20	8.3m		175	21	250m	25	5.0u	200u	100	21k			Si	A1qa
57	30L210	21k	300m	25	40	8.3m		175	21	300m	25	5.0u	200u	100	21k			Si	A1qa
58	40L210	21k	400m	25	40	8.3m		175	21	400m	25	5.0u	200u	100	21k			Si	A1qa
59	50L210	21k	500m	25	40	8.3m		175	21	500m	25	5.0u	200u	100	21k			Si	A1qa
60	60L210	21k	600m	25	40	8.3m		175	21	600m	25	5.0u	200u	100	21k			Si	A1qa
61	80L210	21k	800m	25	60	8.3m		175	21	800m	25	5.0u	200u	100	21k			Si	A1qa
62	100L210	21k	1.0	25	60	8.3m		175	21	1.0	25	5.0u	200u	100	21k			Si	A1qa
63	SCPH42	21k	5.5	55A	300			150A	42	3.0	25A	110u	200u	100A	21k			Si	M496
64	2L220	22k	20m	25	10	8.3m		175	22	20m	25	5.0u	200u	100	22k			Si	A1qb
65	5L220	22k	50m	25	10	8.3m		175	22	50m	25	5.0u	200u	100	22k			Si	A1qb
66	SCHJ22.5K	22k	50m	55A	4.0			150	30 ∆	50m	25A	100n∆	250u∆	100A				Si	A138g
67	1N3057	22k	100m	25A	8.0			165A	95	100m	25A	10u			22k			Si	A1rq
68	10L220	22k	100m	25	20	8.3m		175	22	100m	25A	5.0u	200u	100	22k			Si	A1qb
69	15L220	22k	150m	25	20	8.3m		175	22	150m	25A	5.0u	200u	100	22k			Si	A1qb
70	20L220	22k	200m	25	20	8.3m		175	22	200m	25A	5.0u	200u	100	22k			Si	A1qb
71	NTD22	22k$	200m	25A	10			125A	33 ∆	200m	25A	1.0u∆	100u∆	100A	22k			Si∆	A1ph
72	25L220	22k	250m	25	20	8.3m		175	22	250m	25	5.0u	200u	100	22k			Si	A1qb
73	30L220	22k	300m	25	40	8.3m		175	22	300m	25	5.0u	200u	100	22k			Si	A1qb
74	40L220	22k	400m	25	40	8.3m		175	22	400m	25	5.0u	200u	100	22k			Si	A1qb
75	50L220	22k	500m	25	40	8.3m		175	22	500m	25	5.0u	200u	100	22k			Si	A1qb
76	60L220	22k	600m	25	40	8.3m		175	22	600m	25	5.0u	200u	100	22k			Si	A1qb
77	80L220	22k	800m	25	60	8.3m		175	22	800m	25	5.0u	200u	100	22k			Si	A1qb
78	100L220	22k	1.0	25	60	8.3m		175	22	1.0	25	5.0u	200u	100	22k			Si	A1qb
79	SCPH44	22k	5.5	55A	300			150A	44	3.0	25A	110u	200u	100A	22k			Si	M496
80	2L230	23k	20m	25	10	8.3m		175	23	20m	25	5.0u	200u	100	23k			Si	A1qg
81	5L230	23k	50m	25	10	8.3m		175	23	50m	25	5.0u	200u	100	23k			Si	A1qg
82	10L230	23k	100m	25	20	8.3m		175	23	100m	25	5.0u	200u	100	23k			Si	A1qg
83	15L230	23k	150m	25	20	8.3m		175	23	150m	25	5.0u	200u	100	23k			Si	A1qg
84	20L230	23k	200m	25	20	8.3m		175	23	200m	25	5.0u	200u	100	23k			Si	A1qg
85	25L230	23k	250m	25	20	8.3m		175	23	250m	25	5.0u	200u	100	23k			Si	A1qg
86	30L230	23k	300m	25	40	8.3m		175	23	300m	25	5.0u	200u	100	23k			Si	A1qg
87	40L230	23k	400m	25	40	8.3m		175	23	400m	25	5.0u	200u	100	23k			Si	A1qg
88	50L230	23k	500m	25	40	8.3m		175	23	500m	25	5.0u	200u	100	23k			Si	A1qg
89	60L230	23k	600m	25	40	8.3m		175	23	600m	25	5.0u	200u	100	23k			Si	A1qg
90	80L230	23k	800m	25	60	8.3m		175	23	800m	25	5.0u	200u	100	23k			Si	A1qg
91	100L230	23k	1 0	25	60	8.3m		175	23	1.0	25	5.0u	200u	100	23k			Si	A1qb
92	SCPH46	23k	5.5	55A	300			150A	46	3.0	25A	110u	200u	100A	23k			Si	M496
93	2L240	24k	20m	25	10	8.3m		175	24	20m	25	5.0u	200u	100	24k			Si	A1qg
94	5L240	24k	50m	25	10	8.3m		175	24	50m	25	5.0u	200u	100	24k			Si	A1qg
95	1N3058	24k	100m	25A	8.0			165A	100	100m	25A	10u			24k			Si	A1rr
96	10L240	24k	100m	25	20	8.3m		175	24	100m	25	5.0u	200u	100	24k			Si	A1qh
97	15L240	24k	150m	25	20	8.3m		175	24	150m	25	5.0u	200u	100	24k			Si	A1qh
98	20L240	24k	200m	25	20	8.3m		175	24	200m	25	5.0u	200u	100	24k			Si	A1qh
99	NTD24	24k$	200m	25A	10			125A	36 ∆	200m	25A	1.0u∆	100u∆	100A	24k			Si∆	A1pq
100	25L240	24k	250m	25	20	8.3m		175	24	250m	25	5.0u	200u	100	24k			Si	A1qh
101	30L240	24k	300m	25	40	8.3m		175	24	300m	25	5.0u	200u	100	24k			Si	A1qh
102	40L240	24k	400m	25	40	8.3m		175	24	400m	25	5.0u	200u	100	24k			Si	A1qh
103	50L240	24k	500m	25	40	8.3m		175	24	500m	25	5.0u	200u	100	24k			Si	A1qh
104	60L240	24k	600m	25	40	8.3m		175	24	600m	25	5.0u	200u	100	24k			Si	A1qh
105	80L240	24k	800m	25	60	8.3m		175	24	800m	25	5.0u	200u	100	24k			Si	A1qh
106	100L240	24k	1.0	25	60	8.3m		175	24	1.0	25	5.0u	200u	100	24k			Si	A1qh
107	SCPH48	24k	5.5	55A	300			150A	48	3.0	25A	110u	200u	100A	24k			Si	M496
108▼	XX25	25k	5.0m	25	1.0	8.0m		100A	40	5.0m	25	1.0u	30u	100	25k			Si	A83bg
109▼	HV5-25	25k	5.0m	40	3.0	8.0m		150A	35	5.0m	25	1.0u	40u	100	25k			Si∆	A1te

SYMBOLS AND CODES EXPLAINED IN INTERPRETER

5. RECTIFIERS

IN ORDER OF (1) PIV, (2) MAX AVG FWD CURRENT (3) TEMPERATURE, and (4) TYPE No.

LINE No.	4 TYPE No.	1 PIV (V)	MAX AVG FWD DC CURRENT 2 Io (A)	3 at TEMP (°C)	MAX RATINGS @ 25°C SURGE CUR. PEAK 1 Cy (A)	PULSE WIDTH (s)	DISS. (W)	MAX. TEMP (°C)	MAXIMUM FORWARD VOLTAGE DROP Vf (V)	at If (A)	at TEMP (°C)	MAX. REVERSE CURRENT Ir @25°C & Vr (A)	Ir at T & Vr (A)	TEMP T (°C)	AVALANCHE RATINGS TEST VOLT Vr (V)	MAX V BKDN. (V)	MIN SLOPE (A/V)	DESCRIPTION MAT.	DWG. No.
1▼	HV5-25F	25k	5 0m	40	3 0	8.0m		125A	60	5 0m	25	2.0u	100u	100	25k			Si△	A1te
2	VF5-25	25k†	5 0m	40A	3 0			125A	35	5.0m	25	1.0u	40u	125A	25k			Si△	A83bg
3	KLR25	25k	10m	25	5.0			150S	22 §△	10m†	25	2.0u△	100u	70	25k	30kØ		Si	A1ny
4▼	HV10-25	25k	10m	40	3.0	8.0m		150A	35	10m	25	1.0u	40u	100	25k			Si△	A1te
5▼	HV10-25F	25k	10m	40	3 0	8.0m		125A	60	10m	25	2.0u	100u	100	25k			Si△	A1te
6	VF10-25	25k†	10m	40A	3 0			125A	35	10m	25	1.0u	40u	125A	25k			Si△	A83bg
7	LCD25	25k	10m	50	750m			150A	30	10m	25	2 0u	50u	80	25k			Si	A1nw
8▼	SL25	25k	10m	55A	3.0	8.3m	2.0	150A	36	10m	25	100n	20u	100	25k			Si	A267b
9	2L250	25k	20m	25	10	8 3m		175	25	20m	25	5.0u	200u	100	25k			Si	A1qn
10	KL25	25k	20m	25	5 0			150S	22 §△	20m†	25	1.0u△	50u	100	25k	30kØ		Si	A1ny
11▼	HV25-25	25k	25m	40	3.0	8 0m		150A	35	25m	25	1 0u	40u	100	25k			Si△	A1te
12▼	HV25-25F	25k	25m	40	3 0	8 0m		125A	60	25m	25	2.0u	100u	100	25k			Si△	A1te
13	VF25-25	25k†	25m	40A	3 0			125A	35	25m	25	1.0u	40u	125A	25k			Si△	A83bg
14	5L250	25k	50m	25	10	8.3m		175	25	50m	25	5.0u	200u	100	25k			Si	A1qn
15#	BYX35	25k	50m	50A	15	10m		125J	25	10m	25J							Si	A1sf
16	DI5250LS	25k	50m	50A	40	8 0m		125	34	50m	25A	5 0u			25k			Si	M91
17	HVC2500	25k	50m	55A	1 5			150	40	50m	25	10u			25k			Si	M291r
18▼	SM25	25k	50m	55A	4 0	8.3m	2 0	150A	40	50m	25	100n	25u	100	25k			Si	A267b
19	CP151	25k	50m	75					30		25								M84bn
20	CP152	25k	50m	75					30		25								M84bp
21	10L250	25k	100m	25	20	8.3m		175	25	100m	25	5.0u	200u	100	25k			Si	A1qn
22	BCD25	25k	100m	25A	10			125A	33	100m	25A	2.0u	100u	100A	25k			Si	A1nz
23#	HSC25	25k	100m	25A$				150A	50	100m	25A	5.0u		25	25k			Si	A1rr
24	15L250	25k	150m	25	20	8 3m		175	25	150m	25	5.0u	200u	100	25k			Si	A1qn
25	CFR25	25k	150m	25	10			100A	22 §△	150m†	25	2.0u△	100u	100	25k	30kØ		Si	F12y
26	CLR25	25k	150m	25	10			100A	22 §△	150m†	25	2.0u△	100u	100	25k	30kØ		Si	A1ny
27	20L250	25k	200m	25	20	8.3m		175	25	200m	25	5.0u	200u	100	25k			Si	A1qn
28	CF25	25k	200m	25	10			125A	22 §△	200m†	25	1.0u△	50u	100	25k	30kØ		Si	F12y
29	CL25	25k	200m	25	10			125A	22 §△	200m†	25	1.0u△	50u	100	25k	30kØ		Si	A1ny
30	SC5250	25k	200m	40A$	20 §			175A	25	200m	25A	1 0u	15u	100A	25k			Si	M101
31	25L250	25k	250m	25	20	8 3m		175	25	250m	25	5 0u	200u	100	25k			Si	A1qn
32	SLDHV25	25k	250m	25A	22			175A	51		25							Si	M239i
33	30L250	25k	300m	25	40	8.3m		175	25	300m	25	5 0u	200u	100	25k			Si	A1qn
34	40L250	25k	400m	25	40	8 3m		175	25	400m	25	5.0u	200u	100	25k			Si	A1qn
35#	HSKE17000/7600-3	25k	450m	45A	55	8 0m	24kØ	150A	32	3 0	25J					50kØ		Si	A167p
36#	1RM250	25k	500m	25A	12	10m		150A	50	1.0	25A	500n		25	25k			Si	M62h
37	50L250	25k	500m	25	40	8.3m		175	25	500m	25	5 0u	200u	100	25k			Si	A1qn
38#	D250H	25k	500m	25A	30	10m		100A	50	500m	25	500n		25	25k			Si	M62f
39#	D250HL	25k	500m	25A	30	10m		100A	50	500m	25	500n		25	25k			Si	M62f
40	KVF25	25k	500m	55A	50			175A	33 △	500m	25A	100n△	25u△	100A	25k			Si△	A83by
41	SCH25000	25k	500m	55A	50			175	33 △	500m	25A	100n△	15u△	100A	25k			Si	A138s
42	CP154	25k	500m	75					30		25								M84br
43	60L250	25k	600m	25	40	8.3m		175	25	600m	25	5.0u	200u	100	25k			Si	A1qn
44	SLD25	25k	750m	30A	50			125A	50	750m	25A	10u			25k			Si△	M239j
45	KVP25	25k$	750m	50A	50			150A	36 △	750m	25A	5 0u△			25k			Si△	M239j
46	80L250	25k	800m	25	60	8.3m		175	25	800m	25	5.0u	200u	100	25k			Si	A1qn
47	100L250	25k	1.0	25	60	8.3m		175	25	1.0	25	5.0u	200u	100	25k			Si	A1qn
48#	F250H	25k	1.0	25A	70	10m		100A	50	1 0	25	10n			25k			Si	M62f
49#	F250HL	25k	1 0	25A	70	10m		100A	50	1 0	25	10n			25k			Si	M62f
50	1N4546	25k	1.0	85A	50 §			125A	30	1 0	85A		200u	125A	25k			Si	M239j
51	2ASLD25	25k	1.3	25A	200			175A	42		25							Si	M239j
52	CP153	25k	1 5	75					30		25								M84bq
53	KHP25	25k	2 2	25A	300			175A	36		25A	5.0u			25k			Si	
54	SODSLD25	25k	2.2	30A	290	8.3m		140A	50	2 3	25A	25u			25k			Si△	
55	SCPH50	25k	5.5	55A	300			150A	50	3 0	25A	110u	200u	100A	50k			Si	M496
56	2L260	26k	20m	25	10	8.3m		175	26	20m	25	5.0u	200u	100	26k			Si	A1qq
57	5L260	26k	50m	25	10	8.3m		175	26	50m	25	5 0u	200u	100	26k			Si	A1qq
58	1N3059	26k	100m	25A	8 0	8 3m		165A	105	100m	25A	10u			26k			Si	A1rr
59	10L260	26k	100m	25	20	8.3m		175	26	100m	25	5.0u	200u	100	26k			Si	A1qq
60	15L260	26k	150m	25	20	8 3m		175	26	150m	25	5.0u	200u	100	26k			Si	A1qq
61	20L260	26k	200m	25	20	8.3m		175	26	200m	25	5.0u	200u	100	26k			Si	A1qq
62	NTD26	26k	200m	25A	10	8.3m		125A	39 △	200m	25A	1.0u△	100u△	100A	26k			Si△	A1px
63	25L260	26k	250m	25	20	8 3m		175	26	250m	25	5 0u	200u	100	26k			Si	A1qq
64	30L260	26k	300m	25	40	8.3m		175	26	300m	25	5.0u	200u	100	26k			Si	A1qq
65	40L260	26k	400m	25	40	8.3m		175	26	400m	25	5.0u	200u	100	26k			Si	A1qq
66	50L260	26k	500m	25	40	8 3m		175	26	500m	25	5 0u	200u	100	26k			Si	A1qq
67	60L260	26k	600m	25	40	8 3m		175	26	600m	25	5.0u	200u	100	26k			Si	A1qq
68	80L260	26k	800m	25	60	8.3m		175	26	800m	25	5.0u	200u	100	26k			Si	A1qq
69	100L260	26k	1.0	25	60	8.3m		175	26	1.0	25	5.0u	200u	100	26k			Si	A1qq
70	2L270	27k	20m	25	10	8.3m		175	27	20m	25	5.0u	200u	100	27k			Si	A1qw
71	5L270	27k	50m	25	10	8 3m		175	27	50m	25	5.0u	200u	100	27k			Si	A1qw
72	10L270	27k	100m	25	20	8 3m		175	27	100m	25	5.0u	200u	100	27k			Si	A1qw
73	15L270	27k	150m	25	20	8.3m		175	27	150m	25	5.0u	200u	100	27k			Si	A1qw
74	20L270	27k	200m	25	20	8.3m		175	27	200m	25	5.0u	200u	100	27k			Si	A1qw
75	25L270	27k	250m	25	20	8.3m		175	27	250m	25	5.0u	200u	100	27k			Si	A1qw
76	30L270	27k	300m	25	40	8.3m		175	27	300m	25	5.0u	200u	100	27k			Si	A1qw
77	40L270	27k	400m	25	40	8.3m		175	27	400m	25	5.0u	200u	100	27k			Si	A1qw
78	50L270	27k	500m	25	40	8.3m		175	27	500m	25	5.0u	200u	100	27k			Si	A1qw
79	60L270	27k	600m	25	40	8.3m		175	27	600m	25	5.0u	200u	100	27k			Si	A1qw
80	80L270	27k	800m	25	60	8.3m		175	27	800m	25	5.0u	200	100	27k			Si	A1qw
81	100L270	27k	1.0	25	60	8.3m		175	27	1.0	25	5.0u	200u	100	27			Si	A1qw
82	2L280	28k	20m	25	10	8.3m		175	28	20m	25	5.0u	200u	100	28k			Si	A1qx
83	5L280	28k	50m	25	10	8.3m		175	28	50m	25	5.0u	200u	100	28k			Si	A1qx
84	1N3060	28k	100m	25A	8.0			165A	120	100m	25A	10u			28k			Si	A1rs
85	10L280	28k	100m	25	20	8.3m		175	28	100m	25	5.0u	200u	100	28k			Si	A1qx
86	15L280	28k	150m	25	20	8.3m		175	28	150m	25	5.0u	200u	100	28k			Si	A1qx
87	20L280	28k	200m	25	20	8.3m		175	28	200m	25	5.0u	200u	100	28k			Si	A1qx
88	NTD28	28k$	200m	25A	10			125A	42 △	200m	25A	1.0u△	100u△	100A	28k			Si△	A1qc
89	25L280	28k	250m	25	20	8.3m		175	28	250m	25	5.0u	200u	100	28k			Si	A1qx
90	30L280	28k	300m	25	40	8.3m		175	28	300m	25	5.0u	200u	100	28k			Si	A1qx
91	40L280	28k	400m	25	40	8.3m		175	28	400m	25	5.0u	200u	100	28k			Si	A1qx
92	50L280	28k	500m	25	40	8.3m		175	28	500m	25	5.0u	200u	100	28k			Si	A1qx
93	60L280	28k	600m	25	40	8.3m		175	28	600m	25	5.0u	200u	100	28k			Si	A1qx
94	80L280	28k	800m	25	60	8.3m		175	28	800m	25	5.0u	200u	100	28k			Si	A1qx
95	100L280	28k	1.0	25	60	8.3m		175	28	1.0	25	5.0u	200u	100	28			Si	A1qx
96	2L290	29k	20m	25	10	8.3m		175	29	20m	25	5.0u	200u	100	29k			Si	A1qz
97	5L290	29k	50m	25	10	8.3m		175	29	50m	25	5.0u	200u	100	29k			Si	A1qz
98	10L290	29k	100m	25	20	8.3m		175	29	100m	25	5.0u	200u	100	29k			Si	A1qz
99	15L290	29k	150m	25	20	8.3m		175	29	150m	25	5.0u	200u	100	29k			Si	A1qz
100	20L290	29k	200m	25	20	8.3m		175	29	200m	25	5.0u	200u	100	29k			Si	A1qz
101	25L290	29k	250m	25	20	8.3m		175	29	250m	25	5.0u	200u	100	29k			Si	A1qz
102	30L290	29k	300m	25	40	8.3m		175	29	300m	25	5.0u	200u	100	29k			Si	A1qz
103	40L290	29k	400m	25	40	8.3m		175	29	400m	25	5.0u	200u	100	29k			Si	A1qz
104	50L290	29k	500m	25	40	8.3m		175	29	500m	25	5.0u	200u	100	29k			Si	A1qz
105	60L290	29k	600m	25	40	8.3m		175	29	600m	25	5.0u	200u	100	29k			Si	A1qz
106	80L290	29k	800m	25	60	8.3m		175	29	800m	25	5.0u	200u	100	29k			Si	A1qz
107	100L290	29k	1 0	25	60	8.3m		175	29	1.0	25	5.0u	200u	100	29			Si	A1qz
108▼	XX30	30k	5.0m	25	1.0	8.0m		100A	60	5 0m	25	1.0u	30u	100	30k			Si	A83bt
109▼	HV5-30	30k	5.0m	40	3.0	8 0m		150A	50	5.0m	25	1.0u	40u	100	30k			Si△	A1tf

SYMBOLS AND CODES EXPLAINED IN INTERPRETER

5. RECTIFIERS

IN ORDER OF (1) PIV, (2) MAX AVG FWD CURRENT (3) TEMPERATURE, and (4) TYPE No.

LINE No.	4 TYPE No.	1 PIV (V)	MAX AVG FWD DC CURRENT 2 Io (A)	3 at TEMP (°C)	MAX RATINGS @ 25°C SURGE CUR. PEAK 1 Cy (A)	PULSE WIDTH (s)	DISS. (W)	MAX. TEMP (°C)	MAXIMUM FORWARD VOLTAGE DROP Vf (V)	at If (A)	at TEMP (°C)	MAX. REVERSE CURRENT Ir @25°C & Vr (A)	Ir at T & Vr (A)	TEMP T (°C)	TEST VOLT Vr (V)	AVALANCHE RATINGS MAX V BKDN. (V)	MIN SLOPE (A/V)	MAT.	DESCRIPTION DWG. No.
1▼	HV5-30F	30k	5.0m	40	3.0	8 0m		125A	90	5.0m	25	2.0u	100u	100	30k			Si△	A1tf
2	VF5-30	30k†	5.0m	40	3.0			125A	50	5.0m	25	1.0u	40u	125A	30k			Si△	A83bt
3	SCMS30K	30k	5.0m	55A	2.0	8.3m		150A	90	10m	25A	100n△	2.0u△	100A	30k			Si	A1re
4	K1	30k	5.0m	65	1.0	8.3m		65A	20 △	10m		5 0u△			25k				A1qy
5▼	HV10-30	30k	10m	40	3.0	8.0m		150A	50	10m	25	1 0u	40u	100	30k			Si△	A1tf
6▼	HV10-30F	30k	10m	40	3.0	8 0m		125A	90	10m	25	2.0u	100u	100	30k			Si△	A1tf
7	VF10-30	30k†	10m	40	3.0			125A	50	1.0m	25	1 0u	40u	125A	30k			Si△	A83bt
8	LCD30	30k	10m	50	750m			150A	36	10m	25	2.0u	50m	80	30k			Si	A1pq
9▼	SL30	30k	10m	55A	3.0	8 3m	2 0	150A	36	10m	25	100n	20u	100	30k			Si	A267c
10	2L300	30k	20m	25	10	8.3m		175	30	20m	25	5 0u	200u	100	30k			Si	A1ra
11	KL30	30k	20m	25	5.0			150S	26.4 §△	20m†	25	1.0u△	50u	100	30k	36kØ		Si	A1pr
12	7715-30	30k	25m	25A	1 5	8.3m		125A	60	25m	25	1.0u	100u	125	30k			Si△	A1pp
13▼	HV25-30	30k	25m	40	3.0	8.0m		150A	50	25m	25	1.0u	40u	100	30k			Si△	A1tf
14▼	HV25-30F	30k	25m	40	3.0	8.0m		125A	90	25m	25	2.0u	100u	100	30k			Si△	A1tf
15	VF25-30	30k†	25m	40	3 0			125A	50	25m	25	1.0u	40u	125A	30k			Si△	A83bt
16	5L300	30k	50m	25	10	8.3m		175	30	50m	25	5.0u	200u	100	30k			Si	A1ra
17	HVC3000	30k	50m	55A	1 5			150	50	50m	25	10u			30k			Si	M291s
18	SCHJ30K	30k	50m	55A	4.0			150	40 △	50m	25A	100n△	25u△	100A	30k			Si	A138j
19▼	SM30Ø	30k	50m	55A	4.0	8.3m	3.0	150A	40	50m	25	100n	25u	100	30k			Si	A267c
20	CP156	30k	75m	75					40		25								M84bt
21	1N3061	30k	100m	25A	8.0			165A	125	100m	25A	10u			30k			Si	A1rs
22	10L300	30k	100m	25	20	8 3m		175	30	100m	25	5.0u	200u	100	30k			Si	A1ra
23	BCD30	30k	100m	25A	10			125A	40	100m	25A	2.0u	100u	100A	30k			Si	A1ps
24#	EDH2-30	30k	100m	50	45	10m		80J	36	100m	25	10u		25J	30k	33k		Si	M485
25	15L300	30k	150m	25	20	8 3m		175	30	150m	25	5 0u	200u	100	30k			Si	A1ra
26	CFR30	30k	150m	25	10			100A	26.4 §△	150m†	25	2.0u△	100u	100	30k	36kØ		Si	F12z
27	CLR30	30k	150m	25	10			100A	26.4 §△	150m†	25	2.0u△	100u	100	30k	36kØ		Si	A1pr
28	20L300	30k	200m	25	20	8 3m		175	30	200m	25	5.0u	200u	100	30k			Si	A1ra
29	CF30	30k	200m	25	10			125A	26.4 §△	200m†	25	1.0u△	50u	100	30k	36kØ		Si	F12z
30	CL30	30k	200m	25	10			125A	26.4 §△	200m†	25	10u△	50u	100	30k	36kØ		Si	A1pr
31	NTD30	30k$	200m	25A	10			125A	45 △	200m	25A	1.0u△	100u△	100A	30k			Si△	A1qj
32	25L300	30k	250m	25	20	8.3m		175	30	250m	25	5.0u	200u	100	30k			Si	A1ra
33#	M300K	30k	250m	25A	2 0	10m		150A	60	250m†	25A	1 0u	50u	100A	30k			Si△	A83k
34	SLDHV30	30k	250m	25A	22			175A	60		25							Si	M239j
35	CP155	30k	250m	75					40		25								M84bs
36	30L300	30k	300m	25	40	8.3m		175	30	300m	25	5.0u	200u	100	30k			Si	A1ra
37	40L300	30k	400m	25	40	8.3m		175	30	400m	25	5.0u	200u	100	30k			Si	A1ra
38	50L300	30k	500m	25	40	8.3m		175	30	500m	25	5.0u	200u	100	30k			Si	A1ra
39	HVC30	30k	500m	75C$	12			150C	60	500m		2.0u	50u	100C	30k			Si	Z1
40	60L300	30k	600m	25	40	8.3m		175	30	600m	25	5.0u	200u	100	30k			Si	A1ra
41	SLD30	30k	750m	30A	50			125A	60	750m	25A	10u			30k			Si△	M239j
42	KVP30	30k$	750m	50A	50			150A	42 △	700m	25A	5.0u△			30k			Si△	
43	80L300	30k	800m	25	60	8.3m		175	30	800m	25	5.0u	200u	100	30k			Si	A1ra
44	100L300	30k	1.0	25	60	8.3m		175	30	1.0	25	5.0u	200u	100	30			Si	A1ra
45#	F300H	30k	1.0	25A	30	10m		100A	30	1.0 †	25A	2.0u						Si△	M62
46#	F300HL	30k	1.0	25A	30	10m			36.0	1 0	25A	2.0u			30k	50k			M460c
47	CP157	30k	1.0	75					40		25								M84bu
48	2ASLD30	30k	1.3	25A	200			175A	50		25							Si	M239j
49	SODSLD30	30k	2.2	30A	290			140A	60	2.3	25A	25u			30k			Si△	
50	KHP30	30k	2.25	25A	300			175A	42		25A	5.0u			30k			Si	
51	LCD35	35k	10m	50	750m			150A	42	10m	25	2.0u	50m	80	35k			Si	A1qu
52	KL35	35k	20m	25	5.0			150S	30.8 §△	20m†	25	1.0u△	50u	100	35k	42kØ		Si	A1qd
53	BCD35	35k	100m	25A	10			125A	46	100m	25A	2.0u	100u	100A	35k			Si	A1qe
54	CFR35	35k	150m	25	10			100A	30.8 §△	150m†	25	2.0u△	100u	100	35k	42kØ		Si	F12aa
55	CLR35	35k	150m	25	10			100A	30.8 §△	150m†	25	2.0u△	100u	100	35k	42kØ		Si	A1qd
56	CF35	35k	200m	25	10			125A	30 8 §△	200m†	25	1.0u△	50u	100	35k	42kØ		Si	F12aa
57	CL35	35k	200m	25	10			125A	30.8 §△	200m†	25	1.0u△	50u	100	35k	42kØ		Si	A1qd
58	SLDHV35	35k	250m	25A	22			175A	72		25							Si	M239k
59	SLD35	35k	750m	30A	50			125A	75	750m	25A	10u			35k			Si△	M239k
60	KVP35	35k$	750m	50A	50			150A	49 △	700m	25A	5.0u△			35k			Si△	
61	2ASLD35	35k	1.2	25A	200			175A	59		25							Si	M239k
62	SODSLD35	35k	2 2	30A	290			140A	75	2 3	25A	25u			35k			Si△	
63	KHP35	35k	2.25	25A	300			175A	49		25A	5 0u			35k			Si	
64#	EDH36	36k	10	50	45	10		125	48	.10	25	1.0			36k	37k		Si	F12p
65	SCHJ37.5K	37k	50m	55A	4 0			150	50 △	50m	25A	100n△	25u△	100A	37k			Si	A138p
66▼	XX40	40k	5.0m	25	1 0	8.0m		100A	60	5.0m	25	1.0u	30u	100	40k			Si	A83bt
67▼	HV5-40	40k	5.0m	40	3 0	8.0m		150A	50	5 0m	25	1.0u	40u	100	40k			Si△	A1tf
68▼	HV5-40F	40k	5.0m	40	3.0	8.0m		125A	90	5 0m	25	2 0u	100u	100	40k			Si△	A1tf
69	VF5-40	40k†	5.0m	40	3.0			125A	50	5.0m	25	1.0u	40u	125A	40k			Si△	A83bt
70	SCMS40K	40k	5 0m	55A	2.0	8 3m		150A	120	10m	25A	100n△	2.0u△	100A	40k			Si	A1qf
71▼	HV10-40	40k	10m	40	3.0	8 0m		150A	50	10m	25	1.0u	40u	100	40k			Si△	A1tf
72▼	HV10-40F	40k	10m	40	3.0	8.0m		125A	90	10m	25	2.0u	100u	100	40k			Si△	A1tf
73	VF10-40	40k†	10m	40	3.0			125A	50	1.0m	25	1.0u	40u	125A	40k			Si△	A83bt
74	LCD40	40k	10m	50	750m			150A	48	10m	25	2.0u	50m	80	40k			Si	A1qu
75	KL40	40k	20m	25	5.0			150S	35.2 §△	20m†	25	1 0u△	50u	100	40k	48kØ		Si	A1qs
76	7715-40	40k	25m	25A	1.5	8.3m		125A	80	25m	25	1.0u	100u	125	40k			Si△	A1rf
77▼	HV25-40	40k	25m	40	3.0	8.0m		150A	50	25m	25	1.0u	40u	100	40k			Si△	A1tf
78▼	HV25-40F	40k	25m	40	3 0	8 0m		125A	90	25m	25	2.0u	100u	100	40k			Si△	A1tf
79	VF25-40	40k†	25m	40	3 0			125A	50	25m	25	1.0u	40u	125A	40k			Si△	A83bt
80	BCD40	40k	100m	25A	10			125A	53	100m	25A	2.0u	100u	100A	40k			Si	A1qt
81	ST12△	40k	100m	70$				100	50	100m	100							Si	M84z
82	CP158	40k	100m	75					50		25								M84bv
83	CFR40	40k	150m	25	10			100A	35.2 §△	150m†	25	2.0u△	100u	100	40k	48kØ		Si	F12ab
84	CLR40	40k	150m	25	10			100A	35 2 §△	150m†	25	2.0u△	100u	100	40k	48kØ		Si	A1qs
85	SLDHV40	40k	150m	25A	22			175A	80		25							Si	M239k
86	CF40	40k	200m	25	10			125A	35.2 §△	200m†	25	1.0u△	50u	100	40k	48kØ		Si	F12ab
87	CL40	40k	200m	25	10			125A	35.2 §△	200m†	25	1.0u△	50u	100	40k	48kØ		Si	A1qs
88	HVC40	40k	500m	75C$	12			150C	80	500m		2.0u	50u	100C	40k			Si	Z1
89	SLD40	40k	750m	30A	50			125A	80	750m	25A	10u			40k			Si△	M239k
90	KVP40	40k$	750m	50A	50			150A	55 △	700m	25A	5.0u△			40k			Si△	
91	2ASLD40	40k	1 2	25A	200			175A	67		25							Si	M239k
92	2ASLD40TR	40k	1.5	55$															M240d
93	SODSLD40	40k	2.2	30A	290			140A	80	2.3	25A	25u			40k			Si△	
94	KHP40	40k	2.25	25A	300			175A	55		25A	5.0u			40k			Si△	
95#	P400H	40k	3.0	25A	230	10m		100A	42	3.0 †	25A	10u						Si△	M460b
96▼	BY185	45k	2 5m	25	500m			85	120	200m	75		10u	75	45k			Si	
97	LCD45	45k	10m	50	750m			150A	54	10m	25	2.0u	50m	80	45k			Si	A1qu
98▼	SL45	45k	10m	55A	3 0	8.3m	2.0	150A	48	10m	25	100n	20u	100	45k			Si	A267d
99	KL45	45k	20m	25	5 0			150S	39.6 §△	20m†	25	1.0u△	50u	100	45k	54kØ		Si	A1rc
100	SCHJ45K	45k	50m	55A	4.0			150	60 △	50m	25A	100n△	25u△	100A	45k			Si	A138q
101▼	SM45	45k	50m	55A	4 0	8.3m	3 0	150A	60	50m	25	100n	25u	100	45k			Si	A267d
102	BCD45	45k	100m	25A	10			125A	60	100m	25A	2.0u	100u	100A	45k			Si	A1rd
103	CFR45	45k	150m	25	10			100A	39 6 §△	150m†	25	2.0u△	100u	100	45k	54kØ		Si	F12ac
104	CLR45	45k	150m	25	10			100A	39 6 §△	150m†	25	2.0u△	100u	100	45k	54kØ		Si	A1rc
105	SLDHV45	45k	150m	25A	22			175A	90		25							Si	M239l
106	CF45	45k	200m	25	10			125A	39 6 §△	200m†	25	1.0u△	50u	100	45k	54kØ		Si	F12ac
107	CL45	45k	200m	25	10			125A	39 6 §△	200m†	25	1.0u△	50u	100	45k	50kØ		Si	A1rc
108	SLD45	45k	750m	30A	50			125A	90	750m	25A	10u			45k			Si△	M239l
109	KVP45	45k$	750m	50A	50			150A	63 △	700m	25A	5.0u△			45k			Si△	
110	2ASLD45	45k	1 2	25A	200			175A	75		25							Si	M239l

SYMBOLS AND CODES EXPLAINED IN INTERPRETER

5. RECTIFIERS

IN ORDER OF (1) PIV, (2) MAX AVG FWD CURRENT (3) TEMPERATURE, and (4) TYPE No.

LINE No.	4 TYPE No.	1 PIV (V)	MAX AVG FWD DC CURRENT 2 Io (A)	3 at TEMP (°C)	MAX RATINGS @ 25°C SURGE CUR. PEAK 1 Cy (A)	PULSE WIDTH (s)	DISS. (W)	MAX. TEMP (°C)	MAXIMUM FORWARD VOLTAGE DROP Vf (V)	at If (A)	at TEMP (°C)	MAX. REVERSE CURRENT Ir @25°C & Vr (A)	Ir at T & Vr (A)	TEMP T (°C)	TEST VOLT Vr (V)	AVALANCHE RATINGS MAX V BKDN. (V)	MIN SLOPE (A/V)	DESCRIPTION MAT.	DWG. No.
1	SODSLD45	45k	2 2	30A	290			140A	90	2 3	25A	25u			45k			Si△	
2	KHP45	45k	2.25	25A	300			175A	63		25A	5.0u			45k			Si	
3	KL50	50k	20m	25	5 0			150S	44 §△	20m†	25	1.0u△	50u	100	50k	60kØ		Si	A1rh
4	7715-50	50k	25m	25A	1.5	8.3m		125A	100	25m	25	1.0u	100u	125	50k			Si△	A1rf
5	BCD50	50k	100m	25A	10			125A	66	100m	25A	2.0u	100u	100A	50k			Si	A1rj
6♦	SCXR50K	50k	100m	25	10	8.3m		125A	80 §	100m	25	1.0u			50k			Si	F70c
7	CFR50	50k	150m	25	10			100A	44 §△	150m†	25	2.0u△	100u	100	50k	60kØ		Si	F12ad
8	CLR50	50k	150m	25	10			100A	44	150m†	25	2.0u△	100u	100	50k	60kØ		Si	A1rh
9	SLDHV50	50k	150m	25A	22			175A	102		25							Si	M239l
10	CF50	50k	200m	25	10			125A	44 §△	200m†	25	1.0u△	50u	100	50k	60kØ		Si	F12ad
11	CL50	50k	200m	25	10			125A	44 §△	200m†	25	1.0u△	50u	100	50k	60kØ		Si	A1rh
12	SLD50	50k	750m	30A	50			125A	100	750m	25A	10u			50k			Si△	M239l
13	KVP50	50k$	750m	50A	50			150A	70 △	700m	25A	5.0u△			50k			Si△	
14	2ASLD50	50k	1.0	25A	200			175A	84		25							Si	M239l
15	SODSLD50	50k	2.2	30A	290			140A	100	2.3	25A	25u			50k			Si△	
16	KHP50	50k	2.25	25A	300			175A	70		25A	5.0u			50k			Si△	
17	BYX29/75000	75k	50m	25	5 0	20m		125J	88	50m	25		33u	125	75k			Si	F70
18♦	SCXR75K	75k	100m	25	10	8.3m		125A	120 §	100m	25	1 0u			75k			Si	F70d
19	SLDHV75	75k	100m	25A	22			175A	150		25							Si	M239m
20#	EDH4-75	75k	100m	50	45	10m		125J	110	100m	25A	10u			75k			Si	M513
21	2ASLD75	75k	800m	25A	200			175A	125		25							Si	M239m
22	SODSLD75	75k	2.0	25A	300			175A	125		75							Si	
23	BYX29/100000	100k	50m	25	5.0	20m		125J	116	50m	25		33u	125	100k			Si	F70a
24♦	SCXR100K	100k	100m	25	10	8 3m		125A	160 §	100m	25	1 0u			100k			Si	F70e
25	SLDHV100	100k	100m	25A	22			175A	210		25							Si	M239n
26#	EDH4-100	100k	100m	50	45	10m		125J	140	100m	25A	10u			100k			Si	M513a
27	SLD100	100k	500m	25A	50			175A	167		25							Si	M239n
28	2ASLD100	100k	750m	25A	200			175A	167		25							Si	M239n
29	SODSLD100	100k	1 7	25A	300			175A	167		75							Si	
30	SMHR110	110k	100m	50	15	10m		80	114	200m	25	10u		25	110k			Si	M425
31	SLDHV120	120k	100m	25A	22			175A	240		25							Si	M239p
32	SLD120	120k	500m	25A	50			175A	200		25							Si	M239p
33	2ASLD120	120k	750m	25A	200			175A	200		25							Si	M239p
34	SODSLD120	120k	1 7	25A	300			175A	200		75							Si	
35	BYX29/125000	125k	50m	25	5 0	20m		125J	145	50m	25		33u	125	125k			Si	F70b
36♦	SCXR125K	125k	100m	25	10	8.3m		125A	200 §	100m	25	1.0u			125k			Si	F70f
37#	EDH4-125	125k	100m	50	45	10m		125J	170	100m	25A	10u			125k			Si	M513b
38	SMHR135	135k	100m	50	15	10m		80	138	200m	25	10u		25	135k			Si	M425a
39	BYX29/150000	150k	50m	25	5 0	20m		125J	175	50m	25		33u	125	150k			Si	F70b
40♦	SCXR150K	150k	100m	25	10	8 3m		125A	240 §	100m	25	1.0u			150k			Si	F70g
41#	EDH4-150	150k	100m	50	45	10m		125J	210	100m	25A	10u			150k			Si	M513c
42	SMHR165	165k	100m	50	15	10m		80	168	200m	25	10u		25	165k			Si	M425b
43♦	SCXR175K	175k	100m	25	10	8 3m		125A	280 §	100m	25	1 0u			175k			Si	F70h
44♦	SCXR200K	200k	100m	25	10	8.3m		125A	320 §	100m	25	1.0u			200k			Si	F70j

SYMBOLS AND CODES EXPLAINED IN INTERPRETER

6. SILICON CONTROLLED RECTIFIERS

IN ORDER OF (1) PEAK REV. VOLT., (2) MAX. CONT. CUR., (3) TEMPERATURE, (4) TYPE No.

LINE No.	4 TYPE No.	1 PRV and VBO (V)	MAX. CONT. CURRENT 2 Idc (A)	3 at TEMP (°C)	MAX. HOLD. CUR Ih @ 25°C (A)	MAX. GATE FIRING SPEC at 25°C Igf (A)	Vgf (V)	MAX SAT I Ir@PRV and Is@VBO (A)	at TEMP (°C)	MAX. FWD. VOLT. DROP at 25°C Vf (V)	@ If (A)	SWITCHING TIME at 25°C Ton (s)	for If (A)	Toff (s)	MIN. dV/dt @ 25°C (V/us)	ABS. MAX. RATINGS 1Cy PK SURGE I@25°C (A)	MAX TEMP (°C)	MAX GATE POWER (W)	DWG No.
1	CD200		.45	75	3 0m	400u	.80	5 0u	25	1 4	1.0	1.0u	1.0	20u	50	15	150A		TO5
2	2N4144	15			5.0m	1 0m	.80									8 0 *§	110A	.2 Ø	C41d
3	C6201	15	.20	75A	5.0m	200u	.80	100u	100	1 5	.20						150		M185a
4	RTH0101	15	20	80C	5 0m	20m	1 0	.10m	100	1.5	.20	20u	.20		100	5 0	100C		M443
5	RTH0201	15	20	80C	10m	1.0m	1 0	1.0m	125	2.5	20	.20u	.20		100	5 0	125C		M443
6	RTH0301	15	20	80C	10m	.20m	1 0	.50m	125	1.5	.20	.20u	.20		100	5 0	125C		M443
7	RTH0401	15	.20	80C	5.0m	10m	.80	10m	125	1 5	.20	.20u	.20		100	5.0	125C		M443
8	RTH0501	15	20	80C	3.0m	02m	.80	02m	125	1 3	.20	20u	.20		100	5 0	125C		M443
9	RTH0601	15	.20	80C	2.0m	02m	.70	.02m	125	1.2	.20	.20u	.20		100	5 0	125C		M443
10	2N3254	15	250m	55A	2.0m	20u	750m	10ut	150	1 2	250m	150n			30	1.0	150J		TO46
11	2N3257	15	250m	55A	3 0m	200u	750m	10ut	150	1 2	250m	150n			30	1 0	150J		TO46
12	RTA0101	15	.25	80A	5.0m	20m	1.0	10m	100	1 5	.25	20u	.25		100	6 0	100A		TO46
13	RTB0101	15	25	80A	5.0m	200u	1.0	100u	100	1.5	250m	200n	.25		100	6.0	100A		TO52
14	RTB0201	15	25	80A	10m	1.0m	1 0	1.0m	125	2.5	250m	200n	.25		100	6 0	125A		TO52
15	RTB0301	15	25	80A	10m	20m	1.0	.50m	125	1.5	.25	20u	.25		100	6 0	125A		TO52
16	RTB0401	15	25	80A	5.0m	10m	80	.10m	125	1.5	.25	20u	.25		100	6 0	125A		TO52
17	RTB0501	15	25	80A	3.0m	.02m	80	.02m	125	1.3	.25	.20u	.25		100	6 0	125A		TO52
18	RTB0601	15	25	80A	2.0m	02m	70	02m	125	1.2	.25	.20u	.25		100	6.0	125A		TO52
19	RTC0101	15	25	80A	5.0m	20m	1.0	.10m	100	1.5	20	.20u	.25		100	6.0	100A		TO18
20	RTC0201	15	25	80A	10m	1 0m	1 0	1.0m	125	2.5	.25	20u	.25		100	6.0	125A		TO18
21	RTC0301	15	25	80A	10m	20m	1.0	.50m	125	1.5	.25	.20u	.25		100	6.0	125A		TO18
22	RTC0401	15	25	80A	5 0m	.10m	80	.10m	125	1.5	.25	.20u	.25		100	6.0	125A		TO18
23	RTC0501	15	25	80A	3.0m	02m	80	02m	125	1 3	25	.20u	.25		100	6.0	125A		TO18
24	RTC0601	15	.25	80A	2.0m	02m	.70	02m	125	1 2	.25	20u	.25		100	6 0	125A		TO18
25	2N884A	15	275	25	1 0m	50u	.60	20u	125	1 5	.20	1 2u	.20	3 2u		1 0	150A		TO18
26	3L1015	15	35	25A	100u	5 0u	55	100u	25	1.2	2 0				1 0	10	125A		TO18
27	2N876	15 †	35	100C	5.0m	20m	80	.10mΔ	125C	1.5	.20					20 *§	150C		TO18
28	2N884	15 †	35	100C	1 0m	.02m	.60	02mΔ	125C	1 5	.20					20 *§	150C		TO18
29	3F15	15	35	100	10m	2.0m	1 5	.01m	25	1.5	20	.40u	50	10u		5.0	150		TO18
30	5A15	15	35	100C	1.5m	5 0u	.55	100u	25	1.2	.20				20	10	150C		M298
31♦	C107Q2	15	400m	32A$	3.0m	500u	800m	100u	110	2 5	4 0	1 2u	1.0	40u	8.0 Ø	15	110J	500m	M626
32♦	C107Q4	15	400m	32A$	3 0m	500u	800m	100u	110	2.5	4 0	1 2u	1.0	40u	8.0 Ø	15	110J	500m	M628
33	3L2015	15	.40	35A	1.5m	5.0u	.55	100u	25	1 5	1.0				20	10	150A		TO18
34	TIC35	15	400m	55A	2.0m	20u	750m	100u	125A	1.6	1 0				12 Ø	3.0	125A	10mt	TO18
35	3J15	15	50	100	10m	2.0m	1 5	.10u	25	1.5	1 0	10u	1 0	.20u		5.0	150		TO18
36	3K15	15	.50	100A$		20m	1 0	.05m	150	1.5	1 0	.08u							TO18
37	RTJ0201	15	510m	55C	10m	1 0m	1 0	1.0m	125	2.5	250mt				100	6.0	150S	10mt	TO92
38	RTJ0501	15	510m	55C	3 0m	20u	800m	20u	125	1.3	250mt				100	6.0	150S	10mt	TO92
39	MCR101	15 Δ	800mΔ		5.0m	1.0	800m	100u	85C	1.7	1.0 †					6.0 *	85J	10mt	TO92
40♦	C107Q1	15	800m	20A$	3.0m	500u	800m	100u	110	2 5	4.0	1.2u	1 0	40u	8 0 Ø	15	110J	500m	M627
41♦	C107Q3	15	800m	20A$	3 0m	500u	800m	100u	110	2.5	4.0	1.2u	1 0	40u	8 0 Ø	15	110J	500m	M625
42▼	C103Q	15	800m	125	5.0m	200u	800m	50u	125	1.5	1 0				20 Ø	8 0	125	1.0	M367a
43	RTD0101	15	1 0	80C	5 0m	.20m	1.0	10m	100	1 5	1.0	.20u	1 0		100	15	100C		TO5
44	RTD0201	15	1.0	80C	10m	1.0m	1 0	1.0m	125	2.5	1.0	.20u	1 0		100	15	125C		TO5
45	RTD0301	15	1.0	80C	10m	.20m	1 0	.50m	125	1.5	1 0	.20u	1 0		100	15	125C		TO5
46	RTD0401	15	1 0	80C	5.0m	10m	80	.10m	125	1.4	1 0	.20u	1 0		100	15	125C		TO5
47	RTD0501	15	1.0	80C	3.0m	.02m	80	.02m	125	1.4	1.0	.20u	1.0		100	15	125C		TO5
48	RTD0601	15	1.0	80C	2 0m	.02m	.70	02m	125	1.3	1.0	.20u	1.0		100	15	125C		TO5
49	RTF0101	15	1 0	80C	5.0m	20m	1.0	.10m	100	1.5	1 0	.20u	1 0		100	15	100C		TO5
50	RTF0201	15	1.0	80C	10m	1 0m	1 0	1.0m	125	2.5	1 0	.20u	1 0		100	15	100C		TO5
51	RTF0301	15	1.0	80C	10m	.20m	1.0	.50m	125	1.5	1 0	.20u	1 0		100	15	125C		TO5
52	RTF0401	15	1.0	80C	5.0m	.10m	.80	.10m	125	1 4	1 0	.20u	1 0		100	15	125C		TO5
53	RTF0501	15	1.0	80C	3.0m	.02m	80	.02m	125	1.3	1 0	.20u	1.0		100	15	125C		TO5
54	RTF0601	15	1.0	80C	2 0m	02m	.70	.02m	125	1.3	1 0	.20u	1 0		100	15	125C		TO5
55	3B1034	15	1.0	100C		2 0m	2.0		125C	2.0	1.0					20 *§	150A		TO9
56	2N1869	15	1 25	100C	5 0m	20m	.80	.10mΔ	125C	2.5	2 0					20 §*	150C		TO9
57	2N1875	15	1.25	100C	3.0m	.02m	.60	.10mtΔ	125C	2.5	2 0					20 *§	150C		TO9
58	2N1875A	15	1.25	100	3.0m	.02m	60	.01m	25	2.5	2.0	.10u	.50	.50u		5 0	150		TO9
59	FT1869	15 Δ	1.25	100C	5.0m	.20m	80	.10mΔ	125C	2.5 †	2 0				100 Ø	20 *§	150J		TO5
60♦	C106Q2	15	2 4	20C$	3.0m	200u	800m	100u	110	2.2	4 0	1 2u	1.0	40u	8 0 Ø	20	110	500m	M626
61♦	C106Q4	15	2.4	20C$	3.0m	200u	800m	100u	110	2 2	4.0	1 2u	1.0	40u	8.0 Ø	20	110	500m	M628
62	3B3015	15	3.0	85C	10m	.20m	.80	.01m	25	1 8	3.0				50	15	150C		S223
63▼	C106Q	15	4.0		3.0m	200u	800m	10u	25	2 2	4.0 †	1 2	1 0	100u	8 0 Ø	20	110A	200mt	
64♦	C106Q1	15	4.0	20C	3.0m	200u	800m	100u	110	2.2	4 0	1.2u	1 0	40u	8 0 Ø	20	110	500m	M627
65♦	C106Q3	15	4.0	20C	3 0m	200u	800m	100u	110	2 2	4.0	1 2u	1.0	40u	8.0 Ø	20	110	500m	M625
66♦	IR106Q1	15 Ø	4.0	20C	3.0m	200u	800m	100u	110J	2.8 †	8 0	1.2u	1 0	40u	8 0 ØΔ	25 Δ	110J	100mt	Y202a
67♦	IR106Q2	15 Ø	4 0	20C	3 0m	200u	800m	100u	110J	2.8 †	8.0	1 2u	1.0	40u	8.0 ØΔ	25 Δ	110J	100mt	M626a
68♦	IR106Q3	15 Ø	4.0	20C	3 0m	200u	800m	100u	110J	2.8 †	8.0	1.2u	1.0	40u	8.0 ØΔ	25 Δ	110J	100mt	M628
69♦	IR106Q4	15 Ø	4.0	20C	3.0m	200u	800m	100u	110J	2 8 †	8 0	1 2u	1.0	40u	8.0 ØΔ	25 Δ	110J	100mt	M628a
70♦	IR106Q41	15 Ø	4 0	20C	3.0m	200u	800m	100u	110J	2.8 †	8.0	1.2u	1.0	40u	8 0 ØΔ	25 Δ	110J	100mt	M629
71	TC106Q1	15	4.0 Δ	75C	3.0m	200u	800m	10u	25	2.2	4 0 †	1.0u	1.0	100u	100	20	150S	100mt	M627
72	TC106Q2	15	4.0 Δ	75C	3 0m	200u	800m	10u	25	2.2	4 0 †	1.0u	1.0	100u	100	20	150S	100mt	M626
73	TC106Q3	15	4.0 Δ	75C	3.0m	200u	800m	10u	25	2.2	4.0 †	1.0u	1.0	100u	100	20	150S	100mt	M625
74	TC106Q4	15	4 0 Δ	75C	3.0m	200u	800m	10u	25	2.2	4.0 †	1 0u	1.0	100u	100	20	150S	100mt	M628
75	NCF020D	20	10		15mØ	50m	3.5	5 0m	100	1.2	10	500n	10	6 0u	25 §	125	100A	50 †	TO48
76#	60T4	25	.26 Δ	25A	3.0m	.20m	80	05m	100J	1 1	.20					5 0 *	100J		TO46
77#	CS11B	25	75	40C	12m	7 0m	.25	1.0mt		2.2 †	2 4					20	100C	.05	TO5
78	2N1929	25	.75	55A$	80m$	30m$	2.0 $	2.0mØ	125A	1.4 $	75					30 §	125A	.10	M77
79#	CS12B	25	1.0	60B	12m	15m	2 5	2.0m	100J	2 5	3.0	2 0u		20u	20		100J	1.0 Ø	S160
80	2N4212	25	1.0	85	7.0m	300u	1.0	200u	125	2 0 †	3.1					15 §*	125A	.10 Ø	TO5
81	C9U	25	1.1	18A	20m	8.0m	2.0	4.0mØ	125J	1.1 Ø	1 1			12u		30 §	125J	5.0	M77
82	2N2009	25 †	1.3	80C	5.0m§	.20m	1.0	10mt	125C	1.2	1.0					15 §	150C	05	TO5
83	FT2009	25 Δ	1.3	80C	5.0m§	.20m	1.0	10m	125C	2.0	1 0					15 §*	150J	.05	TO5
84#	10T4	25	1.6 Δ	25C	1.5mØ	10m	3.0	.25mΔ	25J	2.0	1.0			20u		15	100J		TO5
85#	CR1-021C	25 †	1.6	25C	1 9m	10m	3.0	1.0m	100J	2.0	1.0	1.4u	1 0			15	100A	.10	TO5
86	2N2344	25	1.6	55C	1.0m$	75u$	1.0 $	100uΔ	100C	1 5 §	1.6					15 §	100C	10m	TO5
87#	SF1Z11A	25	1 6	62C	10m	1.0m	800m	100u	100J	3.4	10					17	150	100m	TO5
88	MCR914-1	25 ⊠	1.6	65C		8 0m	2 0	1 0mΔ	125J	1.4 Δ	1.0	70u	1.0	10u		15 Δ	125J	1.0	TO5
89	2N2322	25	1.6	85C	3.0m$	.35m$	1.0 $	.10mΔ	125C	1.5 §	1 6					15 §	125C	.01	TO5
90	2N2322A	25	1 6	85C	3.0m$	75u$	.90 $	100u	125C	1 5 §	1.6					15 §	125C	10m	TO5
91	C6211	25	1 6	85C	2.0m	200u	80	100u	125	1 5	1.6						150		M185b
92	C6U	25 Ø	1.6 Δ	87C	5.0m	1.0m	.80	.01m	25J	1.4 Δ	1.0	1 4u	1 0	40u		10 Δ	125J	.10	TO5
93#	SF1Z11	25	1.6	89C	10m	1.0m	800m	100m	125C	3.4	10					17	125	100m	
94	MCR1906-1	25 Δ	1 6	100J	5.0m	1.0m	1.0	500u	100J	1.7	1.0					15	100J	10mt	TO5
95	C511U	25 Ø	1.6	104C	2.0m	.20m	.80	.01m	25J	2.2 Δ	4.0					15 §	125J	.10	M181a
96	C611U	25 Ø	1 6 Δ	104C	5 0m	1.0m	80	.01m	25J	1.4 Δ	1.0	1.4u	1 0	40u		10 Δ	125J	.10	M181a
97	MCR846-1	25	2 0	105J	25mØ	50m	1.5	2.0m	105J	1.6	2 0	.50u	2.0	4.0u	50 §	30	105J	5 Ø	S258
98	RTR0102	25	3 0	65C	100m	50m	3.0	2.0m	100	2.5	10	.20u	3 0		100	40	100C		TO66
99	C15U	25	3.0	75C	30m	25m	2.5	9.0m	105J	1.8 †	15					60	105J	50	TO64
100	NCR020B	25	3.0	80B$		25m	2.5	1.0m	125C	2.0 §	1.0					25 §	100A		S17
101	RTN0102	25	3.0	80C	100m	50m	3 0	2.0m	100	2.5	10	20u	3.0		100	40	100C		TO64
102	RTS0102	25	3.0	80C	100m	50m	3 0	2.0m	100	2.5	10	.20u	3 0		100	40	100C		M94
103	3TCRA	25 ⊠	4 2	60B	50m	50m	3 0	5.0mØ	125J	1.4 Ø	3 0 §	2.0u	3 0	30u		40 *	150S	5 Ø	S56
104	2N1770	25	4 7 Δ	60C		30m$	2 0 $	9.0mØ	125C	1.9 †	4 7					60 *	125C	50	TO64
105	3RC2	25 ⊠	4.7 Δ	92C	5.0mØ	15m	2.0	4.5m	105C	2.0	9 4 †					30 Δ	105J	50 †	TO64
106	2N1770A	25	4 7 Δ	105C	80m$⊠	30m$	2.0 $	9.0mØ	150C	1.9 †	4.7					60 *	150C	50	TO64
107	RTR0202	25	5.0	65C	100m	50m	3 0	2 0m	100	2.5	15	.20u	5.0		100	60	100C		TO66
108	RTR0302	25	5 0	65C	25m	15m	1.5	1.0m	100	2.0	15	.20u	5.0		100	60	100C		TO66
109	RTR0402	25	5 0	65C	100m	50m	3.0	2.0m	125	2.5	15	.20u	5 0		100	60	125C		TO66
110	2N4167	25	5.0	70C	60m$	50m$	2 5 $	2 0m	100C							100 *	100C	5.0 Ø	S262

SYMBOLS AND CODES EXPLAINED IN INTERPRETER

6. SILICON CONTROLLED RECTIFIERS

IN ORDER OF (1) PEAK REV. VOLT., (2) MAX. CONT. CUR., (3) TEMPERATURE, (4) TYPE No.

LINE No.	4 TYPE No.	1 PRV and VBO (V)	MAX. CONT. CURRENT 2 Idc (A)	3 at TEMP (°C)	MAX. HOLD. CUR Ih @ 25°C (A)	MAX. GATE FIRING SPEC at 25°C Igf (A)	Vgf (V)	MAX SAT I Ir@PRV and Is@VBO (A)	at TEMP (°C)	MAX. FWD. VOLT. DROP at 25°C Vf (V)	@ If (A)	SWITCHING TIME at 25°C Ton (s)	for If (A)	Toff (s)	MIN. dV/dt @ 25°C (V/us)	ABS. MAX. RATINGS 1Cy PK SURGE I@25°C (A)	MAX TEMP (°C)	MAX GATE POWER (W)	DWG. No.
1	2N4175	25	5 0	70C	60m$	50m$	2 5 $	2.0m	100C							100 *	100C	5 0 Ø	S263
2	2N4151	25	5 0	75C	60m$	50m$	2.5 $	2.0m	100C							100 *	100C	5.0 Ø	C84
3	2N4159	25	5.0	75C	60m$	50m$	2.5 $	2.0m	100C							100 *	100C	5.0 Ø	C85
4	2N4183	25	5.0	75C	60m$	50m$	2.5 $	2 0m	100C							100 *	100C	5.0 Ø	S264
5	2N4191	25	5.0	75C	60m$	50m$	2.5 $	2.0m	100C							100 *	100C	5 0 Ø	M363
6	RTN0202	25	5.0	80C	100m	50m	3.0	2.0m	100	2 5	15	.20u	5.0		100	60	100C		T064
7	RTN0302	25	5 0	80C	25m	15m	1.5	1 0m	100	1.8	15	200n	5 0		100	60	100C		T064
8	RTN0402	25	5 0	80C	100m	50m	3.0	2 0m	125	2.5	15	20u	5.0		100	60	125C		T064
9	RTN0502	25	5 0	80C	25m	15m	1 5	1.0m	125	1.8	15	20u	5 0		100	60	125C		T064
10	RTN0602	25	5 0	80C	25m	15m	1 5	1 0m	150	1.8	15	.20u	5.0		100	60	150C		T064
11	RTR0502	25	5 0	80C	25m	15m	1 5	1.0m	125	2.0	15	20u	5.0		100	60	125C		T066
12	RTS0202	25	5 0	80C	100m	50m	3 0	2 0m	100	2.5	15	.20u	5 0		100	60	100C		M94
13	RTS0302	25	5.0	80C	25m	15m	1 5	1.0m	100	1.8	15	.20u	5.0		100	60	100C		M94
14	RTS0402	25	5.0	80C	100m	50m	3.0	2.0m	125	2.5	15	.20u	5 0		100	60	125C		M94
15	RTS0502	25	5 0	80C	25m	15m	1 5	1.0m	125	1 8	15	20u	5 0		100	60	125C		M94
16#	2SF221	25	6 0	25C		25m	3 0	3 9m	100C	1 2 △	3 0					50	100	5 Ø	S141
17	NCF020C	25	6.0	70B$		30m$	2 0 $	4.5mØ	60C	1 9 $	4 7			12u⊠		60	100A	50	S17
18	5TCRA	25 ⊠	7 0	60B	50m	50m	3 0	5 0mØ	125J	.83 Ø	5 0 §	2.0u	5 0	30u		60 *	150S	5 Ø	S56
19	C12U	25	7 0 △	70C	8 0mØ	15m	2 0	9 0m	125J	1.8	15	1 0u	10	12u§		60	125J	5.0	S17
20	5RC2	25 ⊠	7 4 △	60C	5.0mØ	15m	2 0	4 5m	105C	1.9	15 †	2.5u	60		20	60 △	105J	.50 †	T064
21	C20U	25	7 4 △	80	30m	25m	1 5	10m	100J	1.8	10					80 §	100J	.50	S131
22	C22U	25	7 4 △	80	30m	25m	1 5	10m	100J	1.8	10					80 §	100J	.50	M94
23#	SF5Z11	25	8 0	24		20m	2 0	9.0m	125J	2 0	20					60	125J	500mØ	S230
24	MCR2315-1	25 △	8 0 △	70C	50m	40m	1 5	3.0m	100J	1 6	5.0	1.0u	5.0	15u	50 Ø§	80 △	100J	5.0 Ø	S230
25	MCR2614L1	25 △	8 0 △	70C	50m	40m	1 5	3.0m	100J	1.6	5.0	1 0u	5 0	15u	50 Ø§	80 △	100J	5.0 Ø	C85a
26	MCR2604-1	25	8 0	100J	25m	20m	1 5	2.0m	100J	1.3	5 0	1.0u	5.0	12u	50	100	100J	5 0	M304a
27	MCR2605-1	25	8 0	100J	25m	20m	1 5	2.0m	100J	1 3	5.0	1.0u	5 0	12u	50	100	100J	5 0	M305
28	2N1842	25	10 △	35C		150m$	3 5 $	22 mØ	35C	2 5 †	10					125 *	100C	.5 †	T048
29	RTT0102	25	10	65C	200m	50m	3 0	2 0m	100	2.5	30	20u	10		100	100	100C		T048
30	RTT0402	25	10	65C	200m	50m	3.0	2 0m	125	2.5	30	20u	10		100	100	125C		T048
31	RTU0102	25	10	65C	200m	50m	3 0	2 0m	100	2 5	30	200n	10		100	100	100C		S131
32	RTU0402	25	10	65C	20	50m	3 0	2.0	125	2 5	30	200n	10		100	100	125C		S131
33	2N1842A	25	10 △	80C		150m$	3 7 $	22.mØ	80C	2 5 †	10					125 *	125C	.5 †	T048
34	2N1842B	25	13 △	80C		75m	3 7 $	1 0mØ	125C	1 8 †	13					150 *	125C	.5 †	T048
35#	2SF71	25	15	25C		50m	3 0	22 m	100C	1.2 △	7 0					100	100	5 Ø	S94
36#	SF10Z11	25	16	26		80m	3 5	45m	100C	3.0	50					113	100J	500m	S18
37	2N681	25	16 △	65C		80m$	3 0 $	6 5mØ	125C	2 0 Ø	16					150 *	125C	.50	T048
38	10RC2	25 ⊠	16 △	65C	10mØ	40m	3 0	6.5mØ	105C	2 3 †	31					125 △	105J	.50 †	T048
39	RTT0202	25	16	65C	200m	50m	3 0	2.0m	100	2 5	50	.20u	16		100	150	100C		T048
40	RTT0302	25	16	65C	50m	25m	2.0	1 0m	100	2.0	50	.20u	16		100	150	100C		T048
41	RTT0502	25	16	65C	200m	50m	3 0	2 0m	125	2 5	50	.20u	16		100	150	125C		T048
42	RTT0602	25	16	65C	50m	25m	2 0	1 0m	125	2 0	50	20u	16		100	150	125C		T048
43	RTU0202	25	16	65C	20	50m	3 0	2 0m	100	2.5	50	200n	16		100	100	100C		S131
44	RTU0302	25	16	65C	50m	25m	2 0	1 0m	100	2 0	50	200n	16		100	150	100C		S131
45	RTU0502	25	16	65C	200m	50m	3 0	2 0	125	2.5	50	200n	16		100	100	125C		S131
46	RTU0602	25	16	65C	50m	25m	2 0	1 0m	125	2 0	50	200n	16		100	150	125C		S131
47	MCR3818-1	25	16	70C	50m	40m	1 5			1 2	20	1 0u	20	15u	50 Ø§	240 §	100J	500m†	M94b
48	MCR3918-1	25	16	70C	50m	40m	1 5			1.2	20	1.0u	20	15u	50 Ø§	240 §	100J	500m†	S131k
49	C36U	25	16 △	100	20mØ	50m	3 5	22.m	100J	1 2		4 5u⊠	10	20u		125	100B	50	S18
50▼	HEPR1300-RT	25	16	100J	10mØ§	10m§										250 §	100		S131r
51	16C025	25	16	125J	50m	15m	2 0	10m	125J	2 0	50	7 0u	16	75u§		150	125J	5.0 Ø	T048#△
52	16C025B	25	16	125J	50m	40m	2 0	10m	125J	2 0	50	7 0u	16	75u§	25	150	125J	5 0 Ø	T048#△
53	16C025C	25	16	125J	50m	40m	2 0	10m	125J	2 0	50	7 0u	16	75u§		150	125J	5.0 Ø	T048#△
54	2N681A	25	18 △	65C	50m$⊠	40m	3 0 $	1.0mØ	65C	2 1 †	18				200	250 *	125C	.5 †	T048
55	MCR649-1	25 ⊠	20	65C		80m	3 5	5 0m△	100	70 Ø	13 §					260 △	100J	5 Ø	T041
56#	2SF131	25	25	25C		50m	3.0	22m	125C	1.2 △	12					150	125	5.0 Ø	S94
57	C37U△	25	25 △	25C		80m	3.5	13m	105C	2.3	30					125	105C	.50	T048
58	10RCF2A	25 ⊠	25 △	45C	10mØ	90m	2 5	6 5mØ	125C	2.8	50 †	3 0u	10	12u§	25 §	200 △	125J	500m†	T048
59#	SF16Z11	25	25	57		40m	3 0	13m	125C	1 9	50					135	125J	500m	S18
60	C30U	25	25 △	70C	50m	25m	1 5	10m	100J	1 5	50					250	100J	.50	S131
61	C31U	25	25 △	70C	50m	9 0m	1 5	10m	100J	1 5	50					250	100J	.50	S131
62	C32U	25	25 △	70C	50m	25m	1 5	10m	100J	1 5	50					250	100J	.50	M94
63	C33U	25	25 △	70C	50m	9 0m	1 5	10m	100J	1 5	50					250	100J	.50	M94
64	2N2573	25	25	85C		80m$	3 5 $	2 5mØ	125C	70 §	16					260 §	125C	.50	T041
65	MCR1907-1	25 △	25	125J	12m	30m	1 5	4 0m	125J	1 7	20	50u	10	12u⊠	30 §	150	125J	.5 †	T048
66	C40U△	25	35 △	18B	100m	40m	3.0	10mΔ	25J	2 0 △	50			12u		150	125J	5 0	T048
67	16RC2A	25 ⊠	35 △	35C	20mØ	40m	2 0	6 5mØ	125C	2.3	70 †		10	75u§	25 §	250 △	125J	50 †	T048
68	18RC2	25 ⊠	35 △	45C	20mØ	40m	2.0	6 5mØ	125C	2 0	70 †					350 △	125J	50 †	T048
69	MCR3835-1	25	35	47C	50m	40m	1.5			1 2	35	1 0u	35	15u	50 Ø§	325 §	100J	500m†	M94b
70	MCR3935-1	25	35	47C	50m	40m	1 5			1 2	35	1 0u	35	15u	50 Ø§	325 §	100J	500m	S131k
71	C38U△	25 ⊠	35	56C	80m	40m	3.0	10m	25J	2 0 △	50	1 4u	5 0	24u	20	150	150C	12	T048
72	22RC2	25 ⊠	35 △	70C	20mØ	40m	2.0	6 5mØ	150C	2.3	70 †				20	225 △	150J	500m†	T048
73	C38U⊠	25	35	87C	80m	40m	2.5	5 0m	150J	2 0 †	50	1 4u	5 0	24u§	20	200	150J	.50 †	T048
74	NLC38U	25	35	90C	80m	40m	2.5	5 0m	150J	2.0	50	1 4u	5 0	24u	20	200	150J	.50 †	T048
75	35C025	25	35	125J	200m§	200m	3.0	10m	125J	2.5	220	10u	35	40u§		900	125J	15 Ø	T094#△
76	35C025B	25	35	125J	200m§	200m	3.0	10m	125J	2 5	220	10u	35	40u§	100	900	125J	15 Ø	T094#△
77	35C025BF	25	35	125J	200m§	200m	3.0	10m	125J	2.5	220	10u	35	40u§	100	900	125J	15 Ø	T083#△
78	35C025F	25	35	125J	200m§	200m	3.0	10m	125J	2.5	220	10u	35	40u§		900	125J	15 Ø	T083#△
79	C45U△	25	55 △	85C	100m	75m	3.0	4 0m	120C	3 1 △	500	5 0u	50	30u§	30 §	700	125J	500m	S315
80	C46U△	25	55 △	85C	100m	75m	3.0	4 0m	120C	3 1 △	500	5.0u	50	30u§	30 §	700	125J	500m	T094
81	2N1909	25	70 △	62C		130m$	3 0 $	6 5mØ	62C	1 9 †	70					1.0k*	125C	.50	T049
82	2N2023	25	70 △	85C		150m$	3 0 $	6 5mØ	85C	1 9 †	70					1.0k*	150C	.50	T049
83	NLC62U	25	70	103C	10	70m	2.5	8 0m	150J	2.5	500	5 0u	50	50u		1 6k	150J	50 †	T083
84	70C025	25	70	125J	200m§	200m	3.0	10m	125J	1.8	220	10u	70	40u§		1.6k	125J	15 Ø	T094#△
85	70C025B	25	70	125J	200m§	150m	3.0	10m	125J	1 8	220	10u	70	40u§	100	1 6k	125J	15 Ø	T094#△
86	70C025BF	25	70	125J	200m§	150m	3 0	10m	125J	1 8	220	10u	70	40u§	100	1 6k	125J	15 Ø	T094#△
87	70C025CF	25	70	125J	200m§	100m	2.0	10m	125J	1.8	220	10u	70	40u§		1.6k	125J	15 Ø	T083#△
88	70C025F	25	70	125J	200m§	200m	3 0	10m	125J	1.8	220	10u	70	40u§		1.6k	125J	15 Ø	T083#△
89	36RC2A	25 ⊠	80 △	75C	20 Ø	700m	2.5	6.5mØ	125C	2 2 †	160					850 △	125J	2.0 †	T094
90	36RCF2A	25 ⊠	80 △	75C	20 Ø	700m	2.5	6 5mØ	125C	2.2 †	160		50	20 §		850 △	125J	2.0 †	T094
91	37RC2A	25 ⊠	80 △	75C	20 Ø	700m	2.5	6 5mØ	125C	2 2 †	160					850 △	125J	2.0 †	T083
92	37RCF2A	25 ⊠	80 △	75C	20 Ø	700m	2 5	6 5mØ	125C	2.2 †	160			20 §		850 △	125J	2.0 †	T083
93	100C025	25	100	125J	200m	200m	2.5	25m	125J	2.0	500	10u	100	40u§		2.0k	125J	10 Ø	T093#△
94	100C025B	25	100	125J	200m	200m	2.5	25m	125J	2 0	500	10u	100	40u§	100	2 0k	125J	10 Ø	T093#△
95	C52U△	25	110 △	60B	100m	75m	3 0	6 0m△	125J	2.5	500	5 0u	50	30u§		1.0k	125	500m	S315
96	C55U△	25	110 △	60C	100m	75m	3 0	10m	125J	2.5	500	5.0u	50	30u§	20 §	1.0k	125J	5.0	S91
97	C56U△	25	110 △	60C	100m	75m	3 0	10m	125J	2 5	500	5 0u	50	30u§	20 §	1.0k	125J	5.0	S108
98	71RC2A	25 ⊠	110 △	62C	20mØ	70m	2 5	6 5mØ	125J	1.9 †	220		50	30u§		1.0k△	125J	.5 †	T094
99	71RCF2A	25 ⊠	110 △	62C	20mØ	70m	2.5	6 5mØ	125J	1.9 †	220		50	20u§	25 △	1.0k△	125J	.50 †	T094
100	72RC2A	25 ⊠	110 △	62C	20mØ	70m	2 5	6 5mØ	125J	1.9 †	220		50	30u§		1.0k△	125J	.5 †	T083
101	72RCF2A	25 ⊠	110 △	62C	20mØ	70m	2 5	6 5mØ	125J	1.9 †	220		50	20u§	25 △	1 0k△	125J	.50 †	T083
102	71RC2B	25 ⊠	110 △	85C	20mØ	70m	2.5	6 5mØ	150J	2.2 †	220		50	40u§		1.0k△	150J	.5 †	T094
103	72RC2B	25 ⊠	110 △	85C	20mØ	70m	2.5	6.5mØ	150J	2 2 †	220		50	40u§		1 0k△	150J	.5 †	T083
104	C62U△	25	110 △	87C	100m	75m	3 0	15m	145C	2 5 △	1.5k	5 0u	50	50u		1 0k	150J	500m	S315
105	C60U	25	110	100C	100m	70m	2.5	8 0m	125J	2.5 †	500	5.0u	50	50u§		1.6k	150J	.5 †	T049
106	C62U⊠	25	110	100C	100m	70m	2 5	8 0m	125J	2.5 †	500	5 0u	50	50u§		1 6k	150J	.50 †	T083
107#	2SF341	25	120	25C		100m	3.0	45m	125C	1 2 △	60					1 0k	125	10 Ø	S142
108	150C025	25	150	125J	200m	200m	2 5	25m		1.7	500	10u	150	40u§		3 0k	125J	10 Ø	T093#△
109	150C025B	25	150	125J	200m	200m	2 5	25m		1 7	500	10u	150	40u§	100	3 0k	125J	10 Ø	T093#△
110	JAN2N3027	30 †			5.0m	200u	800m	50n	25	1 5 †	1.0	200n	1.0	2.0u		8.0	150A		T018

SYMBOLS AND CODES EXPLAINED IN INTERPRETER

6. SILICON CONTROLLED RECTIFIERS

IN ORDER OF (1) PEAK REV. VOLT., (2) MAX. CONT. CUR., (3) TEMPERATURE, (4) TYPE No.

LINE No	4 TYPE No.	1 PRV and VBO (V)	MAX. CONT. CURRENT 2 Idc (A)	3 at TEMP (°C)	MAX. HOLD. CUR Ih @ 25°C (A)	MAX. GATE FIRING SPEC at 25°C Igf (A)	Vgf (V)	MAX SAT I Ir@PRV and Is@VBO (A)	at TEMP (°C)	MAX. FWD. VOLT. DROP at 25°C Vf (V)	@ If (A)	SWITCHING TIME at 25°C Ton (s)	for If (A)	Toff (s)	MIN. dV/dt @ 25°C (V/us)	ABS. MAX. RATINGS 1Cy PK SURGE I@25°C (A)	MAX TEMP (°C)	MAX GATE POWER (W)	DWG. No.
1	JAN2N3030	30 †			4.0m	20u	600m	50n	25	1 5 †	1.0	100n	1.0	2.0u		8 0	150A		TO18
2	2N4145	30			5.0m	1 0m	.80									8.0 *§	110A	.2 Ø	C41d
3	2N5787	30	120m	75A	10m$	350u	1 2 $	200u	125A	1 2	240m					4 0	125A	10m†	TO106
4	SW10	30	.15	25$	10m	2 0m	1 0	05m	125	2 0	.15						125A		TO5
5	SW11	30	15	25$	10m	2 0m	1 0	05m	125	2.0	15						125A		TO18
6	2N4983	30	175	25A	1.5m			500u	25A	1.5	.18	1.0u		25u	50		125A		L12
7	2N4986	30	175m	25A	750u			200u	25A	1.5	180m	1 0u		25u	50		125A		L12
8	2N4987	30	.175	25A	1.5m			500u	25A	1.5	.18	1 0u		25u	50		125A		L12a
9	2N4990	30	.175	25A	750u			200u	25A	1.5	.17	1 0u		25u	50		125A		L12a
10	2N4984	30	.20	25A	500u			150u	25A	1 5	.20	1 0u		25u	50		150A		L12
11	2N4985	30	.20	25A	1.0m			300u	25A	1 5	.20	1.0u		25u	50		150A		L12
12	2N4988	30	20	25A	500u			150u	25A	1 5	.20	1.0u		25u	50		150A		L12a
13	2N4989	30	.20	25A	1.0m			300u	25A	1.5	.20	1.0u		25u	50		150A		L12a
14	MUS4987	30	200m	25A	1.5m			100n	25A	1 5	150m	1 0u		25u			125J		TO92
15	MUS4988	30	200m	25A	500u			100n	25A	1.5	150m	1 0u		25u			125J		TO92
16	B150	30	.20	75A	5 0m	20m	80			1.5	1 0	.20u					125A		TO46
17	C6202	30	.20	75A	2.0m	200u	.80	100u	100	1.5	.20						150		M185a
18	RTH0103	30	.20	80C	5.0m	20m	1 0	.10m	100	1 5	.20	20u	.20		100	5 0	100C		M443
19	RTH0203	30	20	80C	10m	1 0m	1 0	1 0m	125	2 5	.20	.20u	.20		100	5 0	125C		M443
20	RTH0303	30	.20	80C	10m	20m	1 0	50m	125	1.5	.20	20u	.20		100	5.0	125C		M443
21	RTH0403	30	.20	80C	5.0m	.10m	.80	.10m	125	1.5	.20	20u	.20		100	5 0	125C		M443
22	RTH0503	30	20	80C	3.0m	02m	80	.02m	125	1 3	20	.20u	.20		100	5 0	125C		M443
23	RTH0603	30	.20	80C	2.0m	02m	70	.02m	125	1 2	.20	.20u	.20		100	5.0	125C		M443
24	2N3255	30	.25	55A	2.0m	20u	75	10u†	150	1 2	.25	150n			30	1 0	150J		TO46
25	2N3258	30	.25	55A	3.0m	200u	.75	10u†	150	1 2	.25	150n			30	1 0	150J		TO46
26	BA150Ø	30	.25	75A	5 0m	.20m	80			1 5	1.0	.20u					150A		TO18
27	CB200Ø	30	.25	75	3.0m	400u	.80	5.0u	25	1 5	.50	1.0u	1.0		50	5 0	150A		TO18
28	RTA0103	30	25	80A	5 0m	20m	1.0	.10m	100	1 5	25	.20u	.25		100	6.0	100A		TO46
29	RTB0103	30	25	80A	5.0m	200u	1 0	100u	100	1.5	25	200n	.25		100	6.0	100A		TO52
30	RTB0203	30	25	80A	10m	1.0m	1.0	1.0m	125	2.5	.25	200n	.25		100	6 0	125A		TO52
31	RTB0303	30	.25	80A	10m	20m	1 0	50m	125	1.5	.25	20u	.25		100	6.0	125A		TO52
32	RTB0403	30	25	80A	5.0m	.10m	80	10m	125	1.5	.25	.20u	.25		100	6 0	125A		TO52
33	RTB0503	30	25	80A	3.0m	.02m	.80	.02m	125	1.3	.25	.20u	.25		100	6.0	125A		TO52
34	RTB0603	30	25	80A	2.0m	02m	70	02m	125	1.2	.25	20u	.25		100	6.0	125A		TO52
35	RTC0103	30	25	80A	5 0m	20m	1 0	10m	100	1 5	20	20u	.25		100	6.0	100A		TO18
36	RTC0203	30	25	80A	10m	1.0m	1.0	1 0m	125	2.5	.25	.20u	.25		100	6 0	125A		TO18
37	RTC0303	30	.25	80A	10m	20m	1 0	.50m	125	1.5	.25	.20u	.25		100	6.0	125A		TO18
38	RTC0403	30	25	80A	5.0m	10m	80	10m	125	1 5	.25	.20u	.25		100	6 0	125A		TO18
39	RTC0503	30	.25	80A	3.0m	02m	.80	.02m	125	1 3	.25	20u	.25		100	6.0	125A		TO18
40	RTC0603	30	25	80A	2.0m	.02m	.70	.02m	125	1 2	25	.20u	.25		100	6 0	125A		TO18
41	2N5060	30	255m	102C	10m$	350u$	1.2 $	50u	125C	1.7	1.2					6.0	125C	10m†	TO92
42	2N948	30 †	26	125C	1.0m	02m	1 0	.02m	125C	2 0	.20					1.0 §	150C	.02	TO18
43	2N885A	30	.27	25	1 0m	50u	60	20u	125	1.5	.20	1 2u	.20	3 2u		1.0	150A		TO18
44	2N2683	30 Δ	28	55A	1.0m	20u	.80	20uΔ	125A	1 2	20				200	2.0 §	125A		TO18
45	2N2683A	30	.28	55A	1 0m	20u	.80	1.0u	25	1.2	.20	300nØ	.20	10uØ	200	2.0 §	125A	50m†	TO18
46	2N2687	30 Δ	.28	55A	2 0m	.20m	1.0	.10mΔ	125A	1.5	20					2 0 §	125A		TO18
47	3L1030	30	.35	25A	100u	5.0u	55	100n	25	1.2	2 0				1 0	10	125A		TO18
48	2N2679	30 †	.35	55A	2 0m$	100u$	.90 $	100u	150A	1.2	20				200	2 0 §	150A		TO18
49	2N2679A	30	.35	55A	500u	20u	.70	100n	25	1 2	20	300nØ	20	10uØ	200	2.0 §	150A	50m†	TO18
50	2N3001	30 Δ	.35	55A	3.0m	.02m	70	.10m	150A	1 2	35					6.0 §*	150A	.10	TO18
51	2N3005	30 Δ	35	55A	5 0m	20m	80	.10m	150A	1 2	.35					6 0 §*	150A	.10	TO18
52	2N877	30 †	35	100C	5.0m	20m	.80	.10mΔ	125C	1 5	20					20 *§	150C		TO18
53	2N885	30 †	.35	100C	1 0m	.02m	.60	.02mΔ	125C	1.5	.20					20 *§	150C		TO18
54	3F30Ø	30	.35	100	10m	2.0m	1.5	.01m	25	1.5	.20	40u	.50	10u		5.0	150		TO18
55	5A30	30	.35	100C	1.5m	5.0u	55	100n	25	1.2	20				20	10	150C		M298
56	5K30	30	350m	100	5.0m	200u	1 0	100n	25	1 5	1.0	100n	1.0	200n		30	150		M127
57	2N4332	30	.39	25	1 0m	.01m	.80			1.5	.80			10u		8.0	125A	.02	TO52
58♦	C107Y2	30	400m	32A$	3.0m	500u	800m	100u	110	2.5	4 0	1.2u	1.0	40u	8.0 Ø	15	110J	500m	M626
59♦	C107Y4	30	400m	32A$	3.0m	500u	800m	100u	110	2.5	4 0	1 2u	1 0	40u	8.0 Ø	15	110J	500m	M628
60	3L2030	30	400m	35A	1 5m	5.0u	550m	100n	25	1.5	1.0				20	10	150A		TO18
61	JAN2N1870A	30 Ø	400m	50A	5 0m	200u	800m	100u	125A	2.5	2.0					15	150A		TO9
62	TIC36	30	400m	55A	2.0m	20u	750m	100u	125A	1.6	1 0				12 Ø	3.0	125A	10m†	TO18
63▼	S0301K	30	500m	80C	10m	10m	1.5	1.0m	100C	1.6	3.0	1.5u	2 0	25u§	30 §	50 §	125A	500m†	M506
64	2N3027	30	.50	100C	10m$	1.2m$	1 1 $	05mΔ†	150C	1.5	1.0	.20u	1.0	2.0u		5 0 §	150C		TO18
65	2N3030	30	.50	100C	1.0m$	.50m$	.95 $	.05mΔ†	150C	1.5	1 0	.10u	1.0	2.0u		5.0 §	150C		TO18
66	3C6030	30	.50	100C	50m	10m	2 0		125C	2.0	.20						125A		TO9
67	3J30	30	.50	100	10m	2.0m	1 5	.10u	25	1.5	1 0	.10u	1.0	.20u		5.0	150		TO18
68	4K30	30	50	100	5 0m	20m	1 0	.10u	25	1.5	1 0	.10u	1.0	.20u		30	150		TO46
69	4L30	30	.50	100	10m	02m	60	.10u	25	1.5	1 0	08u	1 0	.20u		5 0	150		TO46
70	HR3027	30	.50	100	5.0m	.02m	.60	.10u	25	1.5	1 0	10u	1.0	20u		30	150		TO18
71	HR3030	30	.50	100	2 0m	.20m	80	.10u	25	1.5	1 0	08u	1 0	.20u		5 0	150		TO18
72	ID100	30	500m	100	5.0m	200u	800m	50u	125	1.7	1.0	1.5u	1 0	10u		6.0	125		TO18
73	RTJ0203	30	510m	55C	10m	1.0m	1.0	1.0m	125	2.5	250m†				100	6.0	150S	10m†	TO92
74	RTJ0503	30	510m	55C	3.0m	20u	800m	20u	125	1.3	250m†				100	6.0	150S	10m†	TO92
75#	TAG06-30	30	600m	55C	3.0m	200u	800m	50u	125	1.3	600m	100n	800m	10u		6.0	150J	100m†	TO18
76	MCR102	30 Δ	800mΔ		5 0m	1.0	800m	100u	85C	1.7	1 0 †					6 0 *	85J	10m†	TO92
77♦	C107Y1	30	800m	20A$	3.0m	500u	800m	100u	110	2.5	4.0	1.2u	1.0	40u	8.0 Ø	15	110J	500m	M627
78♦	C107Y3	30	800m	20A$	3.0m	500u	800m	100u	110	2 5	4 0	1 2u	1.0	40u	8.0 Ø	15	110J	500m	M625
79	C103Y	30	800mΔ	25J	5.0m	200u	800m	1 0u	25C	1 5 †	1.0			15u	20 Ø	8 0	125J	10m†	M367a
80	3A3030	30	.80	100	50m	10m	2 0	01m	25	2 5	.50	.50u	.50	5.0u		5.0	150		TO9
81	3A3030A	30	.80	100	50m	10m	2.0	.01m	25	2 5	50	.50u	.50	2.0u		5.0	150		TO9
82▼	HEP320-RT	30	800m	100J	5.0mØ§	200u§										6.0 §	125		TO92
83▼	HEPR1001-RT	30	800m	100J	5.0mØ§	200u§										6.0 §	125		TO92
84	B03400	30	1.0	80C	10m	10m	1.5	1.5m	100C	1.6		1.5u	2.0	25u	30 §	50 §		500m†	M506
85	B04300	30	1 0	80C	10m	10m	1 5	1 5m	100C	1 6		1.5u	2.0	25u	30 §	50 §		500m†	C16aa
86	RTD0103	30	1.0	80C	5.0m	20m	1 0	.10m	100	1.5	1 0	.20u	1.0		100	15	100C		TO5
87	RTD0203	30	1.0	80C	10m	1.0m	1.0	1.0m	125	2.5	1.0	.20u	1 0		100	15	125C		TO5
88	RTD0303	30	1 0	80C	10m	20m	1.0	.50m	125	1.5	1 0	.20u	1.0		100	15	125C		TO5
89	RTD0403	30	1 0	80C	5.0m	.10m	.80	.10m	125	1.4	1 0	.20u	1.0		100	15	125C		TO5
90	RTD0503	30	1 0	80C	3.0m	.02m	80	02m	125	1.4	1 0	.20u	1.0		100	15	125C		TO5
91	RTD0603	30	1.0	80C	2 0m	.02m	.70	.02m	125	1.3	1.0	.20u	1.0		100	15	125C		TO5
92	RTF0103	30	1.0	80C	5.0m	.20m	1.0	.10m	100	1.5	1 0	.20u	1.0		100	15	100C		TO5
93	RTF0203	30	1.0	80C	10m	1.0m	1.0	1.0m	125	2.5	1.0	.20u	1.0		100	15	100C		TO5
94	RTF0303	30	1 0	80C	10m	20m	1 0	.50m	125	1.5	1 0	.20u	1.0		100	15	125C		TO5
95	RTF0403	30	1 0	80C	5 0m	.10m	.80	.10m	125	1.4	1 0	.20u	1.0		100	15	125C		TO5
96	RTF0503	30	1.0	80C	3.0m	.02m	.80	.02m	125	1 3	1 0	.20u	1.0		100	15	125C		TO5
97	RTF0603	30	1.0	80C	2.0m	.02m	70	02m	125	1.3	1.0	.20u	1.0		100	15	125C		TO5
98▼	S0301J	30	1.0	80C	10m	10m	1.5	1.0m	100C	1.6	7.0	1.5u	2 0	25u§	30 §	50 §	125A	500m†	M506
99▼	S0301M	30	1.0	80C	10m	10m	1.5	1.0m	100C	1.6	7.0	1.5u	2 0	25u§	30 §	50 §	125A	500m†	C16aa
100	2N1881	30	1.0	100C		2 0m	2.0	.20m	125C	2.0	1.0					20 *§	150C		TO9
101	3B30S	30	1.0	100		2 0m	2.0	.01m	25	2.5	2.0	1.2u	50	10u		6.0	150		S135
102	2N1870	30	1.25	100C	5.0m	.20m	80	.10mΔ	125C	2.5	2.0					20 §*	150C		TO9
103	2N1870A	30	1.25	100C	5.0m	.20m	.80	10m	125C	2.5	2.0					20 §*	150C		TO9
104	2N1876	30	1.25	100C	3.0m	.02m	.60	.10m†Δ	125C	2.5	2.0					20 *§	150C		TO9
105	2N1876A	30	1.25	100	3.0m	20u	600m	5.0u	25	2.5	2.0	100n	500m	500n		5 0	150		TO9
106	FT1870	30 Δ	1.25	100C	5.0m	.20m	80	.10mΔ	125C	2.5 †	2 0				150 Ø	20 *§	150J		TO5
107	FT1881	30 Δ	1.25	100C	2.0m	2 0m	2.0	.20m	125C	2.0 †	1.0				150 Ø	20 *§	150J		TO5
108♦	ID600	30	1.6	70C	3.0m	200u	800m	100u	110	2.5	4.0	1.0	1 0	40u	20 Ø	15	110A		TO39
109	2N3555	30	1 6	100C	3.0m	02m	70	10m	150	1 4	1.6					18	150J	10	TO5
110	2N3559	30	1.6	100C	5.0m	.20m	80	.10m	150	1 4	1.6					18	150J	.10	TO5

SYMBOLS AND CODES EXPLAINED IN INTERPRETER

6. SILICON CONTROLLED RECTIFIERS

IN ORDER OF (1) PEAK REV. VOLT., (2) MAX. CONT. CUR., (3) TEMPERATURE, (4) TYPE No.

LINE No	4 TYPE No	1 PRV and VBO (V)	MAX. CONT. CURRENT 2 Idc (A)	3 at TEMP (°C)	MAX. HOLD CUR Ih @ 25°C (A)	MAX. GATE FIRING SPEC at 25°C Igf (A)	Vgf (V)	MAX SAT I Ir@PRV and Is@VBO (A)	at TEMP (°C)	MAX. FWD. VOLT. DROP at 25°C Vf (V)	@ If (A)	SWITCHING TIME at 25°C Ton (s)	for If (A)	Toff (s)	MIN. dV/dt @ 25°C (V/us)	ABS. MAX. RATINGS 1Cy PK SURGE I@25°C (A)	MAX TEMP (°C)	MAX GATE POWER (W)	DWG. No.
1	SCRFL03	30 ⊠	1 7	80C	50m	15m	2 0	4.0m	125C	1 2 △	1 0	2 0u§	1 0	12u§		60 §	125C	5.0	A130
2	B01407	30	1 9	80C	10m	10m	1 5	1.5m	100C	1 6		1.5u	2.0	25u	30 §	50 §		500m†	M507
3	B04307	30	1 9	80C	10m	10m	1 5	1 5m	100C	1.6		1.5u	2.0	25u	30 §	50 §		500m†	C16aa
4▼	S0303L	30	1 9	80C	10m	10m	1 5	1 0m	100C	1.6	12	1 5u	2 0	25u§	30 §	50 §	125A	500m†	M507
5▼	S0303M	30	1.9	80C	10m	10m	1 5	1 0m	100C	1.6	12	1.5u	2 0	25u§	30 §	50 §	125A	500m†	C16aa
6	BD100	30	2 0	100C	5.0m	.20m	80			1 8	2 0	.20u					150A		
7♦	C106Y2	30	2 4	20C$	3 0m	200u	800m	100u	110	2.2	4 0	1.2u	1 0	40u	8.0 Ø	20	110	500m	M626
8♦	C106Y4	30	2 4	20C$	3.0m	200u	800m	100u	110	2 2	4.0	1.2u	1 0	40u	8 0 Ø *	20	110	500m	M628
9	3B3030	30	3 0	85C	10m	.20m	80	.01m	25	1.8	3 0				50	15	150C		S223
10	B01414	30	3 8	80C	20m	15m	1 5	1.5m	100C	1.6		1 5u	2.0	25u	30 §	100 §		500m†	M507
11	B05414	30	3.8	80C	20m	15m	1 5	1.5m	100C	1.6		1.5u	2.0	25u	30 §	100 §		500m†	S307
12	B18031	30	3.8	80C	20m	15m	1 5	1.5m	100C	1.6		1.5u	2 0	25u	30 §	100 §		500m†	
13	B19031	30	3.8	80C	20m	15m	1 5	1.5m	100C	1.6		1.5u	2 0	25u	30 §	100 §		500m†	
14▼	S0306B	30	3 8	80C	20m	15m	1 5	1.0m	100C	1.6	24	1.5u	2.0	25u§	30 §	100 §	125A	500m†	S307
15▼	S0306G	30	3 8	80C	20m	15m	1 5	1.0m	100C	1.6	24	1.5u	2 0	25u§	30 §	100 §	125A	500m†	M605
16▼	S0306H	30	3 8	80C	20m	15m	1 5	1 0m	100C	1.6	24	1.5u	2 0	25u§	30 §	100 §	125A	500m†	S361
17▼	S0306L	30	3 8	80C	20m	15m	1 5	1.0m	100C	1 6	24	1.5u	2.0	25u§	30 §	100 §	125A	500m†	M507
18♦	C106Y	30	4 0		3.0m	200u	800m	10u	25	2.2	4 0 †	1.2	1.0	100u	8 0 Ø	20	110A	200m†	
19	MCR106-1	30 △	4 0 △		5 0m	500u	1 0	200u	110J	2.0	4 0 †				10 Ø§	25 *§	110J	100m†	M386a
20♦	C106Y1	30	4.0	20C	3.0m	200u	800m	100u	110	2.2	4 0	1.2u	1 0	40u	8.0 Ø	20	110	500m	M627
21♦	C106Y3	30	4.0	20C	3 0m	200u	800m	100u	110	2.2	4.0	1.2u	1.0	40u	8.0 Ø	20	110	500m	M625
22♦	IR106Y1	30 Ø	4 0	20C	3 0m	200u	800m	100u	110J	2.8 †	8 0	1.2u	1.0	40u	8.0 ØΔ	25 △	110J	100m†	Y202a
23♦	IR106Y2	30 Ø	4 0	20C	3 0m	200u	800m	100u	110J	2.8 †	8 0	1.2u	1 0	40u	8 0 ØΔ	25 △	110J	100m†	M626a
24♦	IR106Y3	30 Ø	4 0	20C	3 0m	200u	800m	100u	110J	2.8 †	8.0	1.2u	1.0	40u	8.0 ØΔ	25 △	110J	100m†	M625
25♦	IR106Y4	30 Ø	4 0	20C	3.0m	200u	800m	100u	110J	2.8 †	8.0	1.2u	1.0	40u	8.0 ØΔ	25 △	110J	100m†	M628a
26▼	IR106Y41	30 Ø	4 0	20C	3 0m	200u	800m	100u	110J	2.8 †	8 0	1.2u	1.0	40u	8.0 ØΔ	25 △	110J	100m†	M629
27	TC106Y1	30	4.0 △	75C	3.0m	200u	800m	10u	25	2	4 0 †	1 0u	1.0	100u	100	20	150S	100m†	M627
28	TC106Y2	30	4.0 △	75C	3 0m	200u	800m	10u	25	2.2	4 0 †	1 0u	1 0	100u	100	20	150S	100m†	M626
29	TC106Y3	30	4 0 △	75C	3 0m	200u	800m	10u	25	2.2	4 0 †	1 0u	1 0	100u	100	20	150S	100m†	M625
30	TC106Y4	30	4 0 △	75C	3 0m	200u	800m	10u	25	2.2	4 0 †	1.0u	1.0	100u	100	20	150S	100m†	M628
31	SCR303	30 ⊠	4 0	80C	25m	10m	2 0	1 0m△	125C	2.0 △	3 0	1 3u§	1 0	15u§		60 §	150J	5 0	S62
32	MCR407-1	30 △	4 0 △	93C	5.0m	500u	1.0	100u	100J	2 6	4 0				10 Ø§	20 △*	110J	500mØ	M386
33	MCR406-1	30 △	4 0 △	97C	3 0m	200u	800m	100u	110J	2.2	4 0				10 Ø§	30 △*	110J	500mØ	M386
34▼	TIC106Y	30	5 0	80	5 0m	200u	1 0	1.0m	110C	1.7	5.0				10 Ø	30	110C	1 3	
35	B01421	30	5 4	80C	20m	15m	1 5	1 5m	100C	1.6		1.5u	2.0	25u	30 §	100 §		500m†	M507
36	B05421	30	5 4	80C	20m	15m	1 5	1.5m	100C	1.6		1.5u	2.0	25u	30 §	100 §		500m†	S307
37	B18041	30	5.4	80C	20m	15m	1 5	1 5m	100C	1 6		1 5u	2.0	25u	30 §	100 §		500m†	
38	B19041	30	5 4	80C	20m	15m	1.5	1 5m	100C	1.6		1 5u	2 0	25u	30 §	100 §		500m†	
39▼	S0308B	30	5 4	80C	20m	15m	1 5	1.0m	100C	1 6	33	1.5u	2.0	25u§	30 §	100 §	125A	500m†	S307
40▼	S0308G	30	5 4	80C	20m	15m	1 5	1 0m	100C	1.6	33	1.5u	2 0	25u§	30 §	100 §	125A	500m†	M605
41▼	S0308H	30	5.4	80C	20m	15m	1 5	1 0m	100C	1 6	33	1.5u	2 0	25u§	30 §	100 §	125A	500m†	S361
42▼	S0308L	30	5.4	80C	20m	15m	1 5	1 0m	100C	1.6	33	1 5u	2.0	25u§	30 §	100 §	125A	500m†	M507
43	B18051	30	6 3	80C	20m	15m	1 5	1 5m	100C	1.6		1 5u	2 0	25u	30 §	100 §		500m†	
44	B01428	30	6.35	80C	20m	15m	1.5	1 5m	100C	1 6		1 5u	2 0	25u	30 §	100 §		500m†	M507
45	B05428	30	6 35	80C	20m	15m	1 5	1 5m	100C	1 6		1 5u	2.0	25u	30 §	100 §		500m†	S307
46	B19051	30	6.35	80C	20m	15m	1 5	1.5m	100C	1 6		1.5u	2.0	25u	30 §	100 §		500m†	
47▼	S0310B	30	6 35	80C	20m	15m	1.5	1 0m	100C	1.6	41	1 5u	2 0	25u§	30 §	100 §	125A	500m†	S307
48▼	S0310G	30	6 35	80C	20m	15m	1 5	1 0m	100C	1.6	41	1.5u	2 0	25u§	30 §	100 §	125A	500m†	M605
49▼	S0310H	30	6 35	80C	20m	15m	1 5	1 0m	100C	1.6	41	1.5u	2 0	25u§	30 §	100 §	125A	500m†	S361
50▼	S0310L	30	6 35	80C	20m	15m	1 5	1 0m	100C	1.6	41	1 5u	2.0	25u§	30 §	100 §	125A	500m†	M507
51	SCRF503	30 ⊠	7 0	60C	50m	25m	2 0	1 0m	125C	1 9 △	15	2.0u§	10	12u§		100 §	125J	10	S121
52	B01435	30	10	80C	20m	20m	1 5	1 5m	100C	1.6		1 5u	2 0	25u	30 §	150 §		600m†	M507
53	B05435	30	10	80C	20m	20m	1 5	1.5m	100C	1.6		1 5u	2.0	25u	30 §	150 §		600m†	S307
54	B18061	30	10	80C	20m	20m	1 5	1.5m	100C	1.6		1.5u	2.0	25u	30 §	150 §		600m†	
55	B19061	30	10	80C	20m	20m	1 5	1 5m	100C	1.6		1.5u	2 0	25u	30 §	150 §		600m†	
56▼	S0316B	30	10	80C	20m	20m	1 5	1 0m	100C	1 6	64	1.5u	2 0	25u§	30 §	150 §	125A	600m†	S307
57▼	S0316G	30	10	80C	20m	20m	1 5	1 0m	100C	1 6	64	1.5u	2.0	25u§	30 §	150 §	125A	600m†	M605
58▼	S0316H	30	10	80C	20m	20m	1 5	1 0m	100C	1 6	64	1 5u	2.0	25u§	30 §	150 §	125A	600m†	S361
59▼	S0316L	30	10	80C	20m	20m	1 5	1.0m	100C	1 6	64	1 5u	2.0	25u§	30 §	150 §	125A	600m†	M507
60	B15001	30	15.8	80C	25m	25m	2.0	1.5m	100C	1 6		1 8u	2.0	25u	30 §	200 §		800m†	M505
61	B16001	30	15 8	80C	25m	25m	2.0	1.5m	100C	1 6		1 8u	2 0	25u	30 §	200 §		800m†	M504
62	B17001	30	15 8	80C	25m	25m	2 0	1 5m	100C	1.6		1 8u	2 0	25u	30 §	200 §		800m†	S308
63	B18001	30	15.8	80C	25m	25m	2.0	1 5m	100C	1 6		1.8u	2.0	25u	30 §	200 §		800m†	
64	B19001	30	15.8	80C	25m	25m	2.0	1 5m	100C	1 6		1.8u	2.0	25u	30 §	200 §		800m†	
65▼	S0325	30	15 8	80C	25m	25m	2 0	1 0m	100C	1 6	100	1.8u	2.0u	25u§	30 §	225 §	125A	800m†	M606
66▼	S0325C	30	15.8	80C	25m	25m	2 0	1.0m	100C	1 6	100	1 8u	2 0	25u§	30 §	225 §	125A	800m†	M607
67▼	S0325D	30	15 8	80C	25m	25m	2 0	1 0m	100C	1.6	100	1.8u	2 0	25u§	30 §	225 §	125A	800m†	S362
68▼	S0325G	30	15.8	80C	25m	25m	2 0	1 0m	100C	1 6	100	1.8u	2.0	25u§	30 §	225 §	125A	800m†	M605
69▼	S0325H	30	15 8	80C	25m	25m	2.0	1.0m	100C	1.6	100	1.8u	2 0	25u§	30 §	225 §	125A	800m†	S361
70	B15021	30	22	80C	40m	25m	2 0	1.5m	100C	1 6		1 8u	2.0	25u	30 §	300 §		800m†	M505
71	B16021	30	22	80C	40m	25m	2 0	1 5m	100C	1 6		1.8u	2.0	25u	30 §	300 §		800m†	M504
72	B17021	30	22	80C	40m	25m	2 0	1 5m	100C	1.6		1 8u	2.0	25u	30 §	300 §		800m†	S308
73	B18021	30	22	80C	40m	25m	2 0	1 5m	100C	1.6		1.8u	2 0	25u	30 §	300 §		800m†	
74	B19021	30	22	80C	40m	25m	2 0	1.5m	100C	1.6		1 8u	2 0	25u	30 §	300 §		800m†	
75▼	S0335	30	22	80C	40m	25m	2 0	1 0m	100C	1.6	141	1.8u	2.0	25u§	30 §	325 §	125A	800m†	M606
76▼	S0335C	30	22	80C	40m	25m	2 0	1.0m	100C	1.6	141	1 8u	2 0	25u§	30 §	325 §	125A	800m†	M607
77▼	S0335D	30	22	80C	40m	25m	2 0	1.0m	100C	1.6	141	1.8u	2.0	25u§	30 §	325 §	125A	800m†	S362
78▼	S0335G	30	22	80C	40m	25m	2.0	1 0m	100C	1 6	141	1 8u	2 0	25u§	30 §	325 §	125A	800m†	M605
79▼	S0335H	30	22	80C	40m	25m	2.0	1 0m	100C	1.6	141	1.8u	2.0	25u§	30 §	325 §	125A	800m†	S361
80	C37U⊠	30	25	37C	20mØ	80m	3 0	5.0mØ	105J	2 3 †	30	1.4u	5.0			175	105J	.50 †	TO48
81	SCRF1603	30 ⊠	35	25C	100m	40m	3 0	6.0mΔ	125C	2.0	50	2.0u§	10	12u§		200 §	125J	15	TO48
82	C40U⊠	30	35	62C	10mØ	40m	2 5	5 0mØ	125J	2.0 †	50	1.4u	5.0	8.0u	200 §	150	125J	500m†	TO48
83	C45U⊠	30	55	89C	100m	70m	3 0	8.0m	125J	3.0 †	500	5 0u	50	30u§	200 §	1 2k	125J	.50 †	TO83
84	C46U⊠	30	55	89C	100m	70m	3.0	8.0m	125J	3.0 †	500	5.0u	50	30u§	200 §	1.2k	125J	.50 †	TO49
85	809U51	30 △	110	60B	10m§	70m	3.0			1 3	50	3.0u		20u		100	125J	5.0	S108
86	C55U⊠	30	110	60C	100m	70m	2 5	8.0m	125J	2 5 †	500	5 0u	5 0	15u§	200 §	1.2k	125J	.50 †	TO49
87	C56U⊠	30	110	60C	100m	70m	2 5	8.0m	125J	2.5 †	500	5 0u	5 0	15u§	200 §	1.2k	125J	.50 †	TO83
88	C52U⊠	30	110	77C	100m	70m	2 5	8 0m	125J	2.5 †	500	5 0u	5.0	30u§	200 §	1 6k	125J	.50 †	TO83
89	TIC44	30 ⊠	300	25A	5 0m	.20m	80	.05m	125A	1 4	.30	3.5u		6.8u		6.0	125A	4 Ø	M367
90#	CR70-051A	40 †	85	75C		100m	3 0	15m	25C	1.7	.70				20	1 0k	125C	1.0	TO49
91#	CR100-051C	40 △	124	80C		100m	3 0	15m	25C	1 7	100				20	1 2k	125C	1 0	M376
92	JAN2N2323	50			2.0m	.35m	1 0	.01m	25	2 2	4 0					15	125	.01	TO5
93	JAN2N2323A	50			2 0m	.35m	1 0	.01m	25	2.2	4.0					15	125	.01	TO5
94#	10RCV5	50		125	50m	45m	2.9	6.5m	125	2.3			135	10u	100	135	125	.50	TO48
95#	61T4⊠	50	26 △	25A	3 0m	.20m	80	.05m	100J	1.1	.20					5 0 *	100J		TO46
96▼#	2SF1110	50 Ø	300m	25A		1.0m	800m	100u	100J	1 2	600m					10 △	100J	100mØ	C123
97#	CR02AM1	50 Ø	300m	25A		1.0m	800m	100u	100J	1.2	600m					10 △	100J	100mØ	C123
98#	2SF101	50 Ø	38	25A		50m	1 0	.10m	100J	2.5	4.0					15	100J	.01	TO5
99#	2SF656	50 Ø	38	25A	4 0mØ	1.0m	80	.10m	100J	2.5	4.0					8.0	100J	.01	
100#	2SF521	50 Ø	.40	25A	2 0mØ	3.0m	1 0	.40mØ	125J	1.2	1 0					20	125J	.1 Ø	TO5
101♦#	CR05A1	50 Ø	400m	25A		3.0m	1.0	400u	125J	1.2	1.0					20 △	125J	100mØ	TO5
102♦	C107F2	50	400m	32A$	3.0m	500u	800m	100u	110	2.5	4.0	1.2u	1 0	40u	8 0 Ø	15	110J	500m	M626
103♦	C107F4	50	400m	32A$	3.0m	500u	800m	100u	110	2.5	4.0	1.2u	1.0	40u	8.0 Ø	15	110J	500m	M628
104▼	S0501K	50	500m	80C	10m	10m	1.5	1 0m	100C	1.6	3 0	1.5u	2 0	25u§	30 §	50 §	125A	500m†	M506
105#	TD501J	50	600m	25A	40mØ	20m	3.0	1.0m	125J	2.0	1.0	1.5u§	500m	15u§	50 Ø§	12		60m	C16e
106#	TDRA05	50	600m	25A	20mØ	10m	3.0	1.0m	125J	2.0	1.0	1.5u§	500m	20u§	50 Ø§	12		30m	C16e
107#	CS11C	50	75	40C	12m	7 0m	.25	1.0m†		2.2 †	2 4					20	100C	.05	TO5
108	2N1930	50	.75	55A$	80m$	30m$	2 0 $	2.0mØ	125A	1.4 $	.75					30 §	125A	.10	M77
109♦	C107F1	50	800m	20A$	3.0m	500u	800m	100u	110	2.5	4 0	1.2u	1.0	40u	8 0 Ø	15	110J	500m	M627
110♦	C107F3	50	800m	20A$	3.0m	500u	800m	100u	110	2.5	4.0	1.2u	1 0	40u	8.0 Ø	15	110J	500m	M625

SYMBOLS AND CODES EXPLAINED IN INTERPRETER

6. SILICON CONTROLLED RECTIFIERS

IN ORDER OF (1) PEAK REV. VOLT., (2) MAX. CONT. CUR., (3) TEMPERATURE, (4) TYPE No.

LINE No.	4 TYPE No.	1 PRV and VBO (V)	MAX. CONT. CURRENT 2 Idc (A)	3 at TEMP (°C)	MAX. HOLD. CUR Ih @ 25°C (A)	MAX. GATE FIRING SPEC at 25°C Igf (A)	Vgf (V)	MAX SAT I Ir@PRV and Is@VBO (A)	at TEMP (°C)	MAX. FWD. VOLT. DROP at 25°C Vf (V)	@ If (A)	SWITCHING TIME at 25°C Ton (s)	for If (A)	Toff (s)	MIN. dV/dt @ 25°C (V/us)	ABS. MAX. RATINGS 1Cy PK SURGE I@25°C (A)	MAX TEMP (°C)	MAX GATE POWER (W)	DWG. No.
1	2N4096	50 △	1.0	25C	2.0m	.20m	.80	.02m△	125C	1.6	.50	1.5u	.20	15u	75	4.0 *	125J	.1 †	TO46
2	2N4108	50 △	1.0	25C	2.0m	.20m	.80	.02m△	125C	1.6	.50	1 5u	.20	15u	75	4.0 *	125C	.1 †	TO18
3#	TD501	50	1.0	25C	1.0mØ	2.5m	5.0	1.0m	100J	2.0	.75	1.5u	.60	20u		12	100A	.01	TO5
4#	TD501S	50	1.0	25C	.30mØ	.30m	5.0	1.0m	100J	2.0	75	1.5u	60	40u		12	100A	.01	TO5
5#	TDR05	50	1.0	25A	30mØ	20m	3.0	1.0m	125J	2.0	1.0	1.5u§	500m	20u§	50 Ø§	12		60m	C16e
6#	T.75F50	50	1.0	60	20m	25m	2.5	1.0m	90J	2.0	1.0	2.0u	.40	20u	20	15	45A	.20	TO5
7#	TAG1-50	50	1.0	70C	25m	10m	2.0	1.0m	105	2.0	2.0					15	105J	30m†	TO5
8#	TAG2-50	50	1.0	70C	5.0m	1.0m	2.0	1.0m	105	2.0	2.0					15	105	30m†	TO5
9	2N1595	50	1.0	80C		10m	3.0	1.0m	125C	2.0 §	1.0					15 §	125C		TO5
10	B03401	50	1.0	80C	10m	10m	1.5	1.5m	100C	1.6		1.5u	2.0	25u	30 §	50 §		500m†	M506
11	B04301	50	1.0	80C	10m	10m	1.5	1.5m	100C	1.6		1.5u	2.0	25u	30 §	50 §		500m†	C16aa
12▼	S0501J	50	1.0	80C	10m	10m	1.5	1.0m	100C	1.6	7.0	1.5u	2.0	25u§	30 §	50 §	125A	500m†	M506
13▼	S0501M	50	1.0	80C	10m	10m	1.5	1.0m	100C	1.6	7.0	1.5u	2.0	25u§	30 §	50 §	125A	500m†	C16aa
14	2N4213	50	1.0	85	7.0m	300u	1.0	200u	125	2.0 †	3.1					15 §*	125A	.10 Ø	TO5
15	C9F	50	1.1	18A	20m	8.0m	2.0	4.0mØ	125J	1.1 Ø	1.1			12u		30 §	125J	5 0	M77
16	SCR10A	50 ⊠	1.1	25C	20m	15m	2.0	4.0m△	125C	1.2 △	1.0	1.0u§	30	20u§		60 §	125J	5.0	A130
17	SCRF10A	50 ⊠	1.1	25C	50m	15m	2.0	4.0m△	125C	1.2 △	1.0	2.0u§	1.0	6.0u§		60 §	125J	5.0	A130
18	2N2010	50 †	1.3	80C	5.0m§	20m	1.0	10m†	125C	1.2	1.0					15 §	150C	.05	TO5
19	FT2010	50 △	1.3	80C	5.0m§	.20m	1.0	10m	125C	2.0	1.0					15 §*	150J	.05	TO5
20#	GC0501	50	1.4	25A	50mØ	25m	3.0	1.0m		2.0	1.0					3.0	100C	5.0	TO5
21#	11T4	50	1.6 △	25C	1.5mØ	10m	3.0	.25m△	25J	2.0	1.0			20u		15	100J		TO5
22#	CR1-051C	50 †	1.6	25C	1.9m	10m	3.0	1.0m	100J	2.0	1.0	1 4u	1.0			15	100A	.10	TO5
23	2N2345	50	1.6	55C	1.0m$	75u$	1.0 $	100u△	100C	1.5 §	1.6					15 §	100C	10m	TO5
24	TI145A0	50	1.6	60C	25m	25m	3.5			2.0	1.0					30	105C	.30	TO5
25#	SF1A11A	50	1.6	62C	10m	1.0m	800m	100u	100J	3.4	10					17	150	100m	TO5
26	MCR914-2	50 ⊠	1.6	65C		8.0m	2.0	1.0m△	125J	1.4 △	1.0	.70u	1.0	10u		15 △	125J	1.0	TO5
27♦	ID200	50	1.6	70C	3.0m	200u	800m	100u	110	2.2	4.0	1.0	1.0	40u	20 Ø	15	110A		TO39
28♦	ID601	50	1.6	70C	3.0m	200u	800m	100u	110	2.5	4.0	1.0	1.0	40u	20 Ø	15	110A		TO39
29	2N2323	50	1.6	85C	3.0m$	.35m$	1.0 $	.10m△	125C	1.5 §	1.6					15 §	125C	.01	TO5
30	2N2323A	50	1.6	85C	3.0m$	75u$	.90 $	100u	125C	1.5 §	1.6					15 §	125C	10m	TO5
31	C6212	50	1 6	85C	2.0m	200u	.80	100u	125	1.5	1.6						150		M185b
32	C6F	50 Ø	1.6 △	87C	5.0m	1.0m	.80	.01m	25J	1.4 △	1 0	1.4u	1.0	40u		10 △	125J	.10	TO5
33#	SF1A11	50	1.6	89C	10m	1.0m	800m	100m	125C	3.4	10					17	125	100m	
34	MCR1906-2	50 △	1 6	100J	5.0m	1 0m	1.0	500u	100J	1 7	1 0					15	100J	10m†	TO5
35	C511F	50 Ø	1.6	104C	2.0m	.20m	80	.01m	25J	2.2 △	4 0					15 §	125J	.10	M181a
36	C611F	50 Ø	1.6 △	104C	5.0m	1.0m	.80	.01m	25J	1.4 △	1.0	1.4u	1.0	40u		10 △	125J	.10	M181a
37	2N1595A	50	1.6	110C	5.0m	2.0m	3.0	1 0m	125J	2.0	1.0					15 *	150J	.10	TO5
38	SCRFL05	50 ⊠	1.7	80C	50m	15m	2.0	4 0m	125C	1.2 △	1.0	2.0u§	1.0	12u§		60 §	125C	5.0	A130
39	B01408	50	1.9	80C	10m	10m	1.5	1.5m	100C	1.6		1.5u	2.0	25u	30 §	50 §		500m†	M507
40	B04308	50	1.9	80C	10m	10m	1.5	1 5m	100C	1.6		1.5u	2.0	25u	30 §	50 §		500m†	C16aa
41▼	S0503L	50	1 9	80C	10m	10m	1.5	1.0m	100C	1.6	12	1.5u	2.0	25u§	30 §	50 §	125A	500m†	M507
42▼	S0503M	50	1.9	80C	10m	10m	1.5	1.0m	100C	1.6	12	1.5u	2.0	25u§	30 §	50 §	125A	500m†	C16aa
43♦#	CR2AM1	50 Ø	2.0	60C		3.0m	1 0	100u	100J	1.8	4 0					20 △	100J	500mØ	M488a
44	MCR846-2	50	2.0	105J	25mØ	50m	1.5	2 0m	105J	1.6	2 0	.50u	2.0	4.0u	50 §	30	105J	5 Ø	S258
45♦	C106F2	50	2.4	20C$	3.0m	200u	800m	100u	110	2.2	4.0	1 2u	1.0	40u	8.0 Ø	20	110	500m	M626
46♦	C106F4	50	2.4	20C$	3.0m	200u	800m	100u	110	2.2	4 0	1.2u	1.0	40u	8.0 Ø	20	110	500m	M628
47#	TM504	50	2.5	25A	30mØ	25m	3.0	3.0m	110J	2.0	8.0	2.0u§	1.0	60u§	50 Ø§	50		75m	S141d
48	NCM050C	50	3.0	$	15mØ	30m	1.5	2 0m	100J	1.5	5.0	1.0u⊠		10u⊠	25 §		100	20 Ø	S17
49#	2SF528	50	3.0	40C	5.0mØ	20m	2.0	1.5mØ	125J	1 2	3.0					50	125J	1 Ø	C63a△
50	RTR0105	50	3 0	65C	100m	50m	3.0	2.0m	100	2.5	10	.20u	3.0		100	40	100C		TO66
51	C15F	50	3.0	75C	30m	25m	2.5	9.0m	105J	1 8 †	15					60	105J	.50	TO64
52	NCR050B	50	3.0	80B$		25m	2.5	1.0m	125C	2 0 §	1.0					25 §	100A		S17
53	RTN0105	50	3.0	80C	100m	50m	3.0	2.0m	100	2.5	10	.20u	3.0		100	40	100C		TO64
54	RTS0105	50	3.0	80C	100m	50m	3.0	2 0m	100	2.5	10	.20u	3.0		100	40	100C		M94
55#	CR3D1	50 Ø	3.0	95C	5 0mØ	20m	2.0	1.5m	125J	1.2	3.0					50 △	125J	1 0 Ø	C63a
56	B01415	50	3.8	80C	20m	15m	1 5	1 5m	100C	1.6		1.5u	2.0	25u	30 §	100 §		500m†	M507
57	B05415	50	3.8	80C	20m	15m	1 5	1.5m	100C	1.6		1.5u	2.0	25u	30 §	100 §		500m†	S307
58	B18032	50	3.8	80C	20m	15m	1.5	1.5m	100C	1 6		1.5u	2.0	25u	30 §	100 §		500m†	
59	B19032	50	3.8	80C	20m	15m	1.5	1.5m	100C	1 6		1.5u	2.0	25u	30 §	100 §		500m†	
60▼	S0506B	50	3 8	80C	20m	15m	1.5	1.0m	100C	1.6	24	1.5u	2.0	25u§	30 §	100 §	125A	500m†	S307
61▼	S0506G	50	3 8	80C	20m	15m	1.5	1 0m	100C	1.6	24	1.5u	2 0	25u§	30 §	100 §	125A	500m†	M605
62▼	S0506H	50	3.8	80C	20m	15m	1 5	1.0m	100C	1 6	24	1.5u	2.0	25u§	30 §	100 §	125A	500m†	S361
63▼	S0506L	50	3.8	80C	20m	15m	1 5	1 0m	100C	1.6	24	1.5u	2.0	25u§	30 §	100 §	125A	500m†	M507
64♦	C106F	50	4.0		3 0m	200u	800m	10u	25	2.2	4 0 †	1.2	1.0	100u	8.0 Ø	20	110A	200m†	
65♦	C106F1	50	4.0	20C	3.0m	200u	800m	100u	110	2.2	4 0	1.2u	1.0	40u	8.0 Ø	20	110	500m	M627
66♦	C106F3	50	4 0	20C	3.0m	200u	800m	100u	110	2.2	4.0	1.2u	1.0	40u	8 0 Ø	20	110	500m	M625
67♦	IR106F1	50 Ø	4 0	20C	3 0m	200u	800m	100u	110J	2.8 †	8.0	1.2u	1.0	40u	8.0 Ø△	25 △	110J	100m†	Y202a
68♦	IR106F2	50 Ø	4.0	20C	3.0m	200u	800m	100u	110J	2.8 †	8.0	1.2u	1.0	40u	8.0 Ø△	25 △	110J	100m†	M626a
69♦	IR106F3	50 Ø	4 0	20C	3.0m	200u	800m	100u	110J	2.8 †	8.0	1.2u	1.0	40u	8.0 Ø△	25 △	110J	100m†	M625
70♦	IR106F4	50 Ø	4 0	20C	3 0m	200u	800m	100u	110J	2.8 †	8.0	1.2u	1.0	40u	8.0 Ø△	25 △	110J	100m†	M628a
71▼	IR106F41	50 Ø	4 0	20C	3.0m	200u	800m	100u	110J	2.8 †	8.0	1.2u	1.0	40u	8.0 Ø△	25 △	110J	100m†	M629
72	TC106F1	50	4 0 △	75C	3.0m	200u	800m	10u	25	2.2	4.0 †	1.0u	1.0	100u	100	20	150S	100m†	M627
73	TC106F2	50	4.0 △	75C	3 0m	200u	800m	10u	25	2.2	4.0 †	1.0u	1.0	100u	100	20	150S	100m†	M626
74	TC106F3	50	4 0 △	75C	3 0m	200u	800m	10u	25	2.2	4.0 †	1.0u	1.0	100u	100	20	150S	100m†	M625
75	TC106F4	50	4 0 △	75C	3.0m	200u	800m	10u	25	2.2	4.0 †	1.0u	1.0	100u	100	20	150S	100m†	M628
76	2N1600	50	4.0	80C		10m	3.0	1.0m	125C	2.0 §	1.0					25 §	125C		TO64
77	SCR30A	50 ⊠	4 0	80C	25m	15m	2 0	1.0m△	125C	2.0 △	3 0	1.0u⊠	60			60 §	125J	5.0	S62
78	SCRF30A	50 ⊠	4 0	80C	50m	15m	2 0	1.0m△	125C	2.0 △	3.0	2.0u§	1.0	6.0u§		60 §	125J	5.0	S62
79	3TCRB	50 ⊠	4 2	60B	50m	50m	3 0	4.5mØ	125J	1.4 Ø	3 0 §	2.0u	3.0	30u		40 *	150S	5 Ø	S56
80#	TM507	50	4.5	25A	40mØ	40m	3.0	3.0m	110J	2.0	15	2.0u§	6.0	50u§	50 Ø§	80		120m	S141d
81#	TM507S	50	4.5	25A	50mØ	40m	3.0	3.0m	110J	2.5	15	2 0u		15u	100 §	80		120m	S141d
82#	TRA705	50	4 5	25A	40mØ	40m	3.0	3.0m	110J	2.0	15	2.0u§	6.0	40u§	50 Ø§	80		120m	M94g
83#	TRA705D	50	4 5	25A	40mØ	40m	3.0	3.0m	110J	2.0	15	2.0u§	6 0	40u§	50 Ø§	80		120m	S131
84	2N1771	50	4.7 △	60C		30m$	2.0 $	9 0mØ	125C	1.9 †	4 7					60 *	125C	.50	TO64
85	3RC5	50 ⊠	4 7 △	92C	5 0mØ	15m	2.0	4.5m	105C	1.9	9.4 †					30 △	105J	.50 †	TO64
86	2N1771A	50	4 7 △	105C	80m$⊠	30m$	2.0 $	9.0mØ	150C	1 9 †	4.7					60 *	150C	.50	TO64
87	RTR0205	50	5 0	65C	100m	50m	3.0	2.0m	100	2.5	15	.20u	5.0		100	60	100C		TO66
88	RTR0305	50	5 0	65C	25m	15m	1 5	1.0m	100	2.0	15	.20u	5.0		100	60	100C		TO66
89	RTR0405	50	5.0	65C	100m	50m	3.0	2.0m	125	2.5	15	.20u	5.0		100	60	125C		TO66
90	2N4168	50	5 0	70C	60m$	50m$	2.5 $	2.0m	100C							100 *	100C	5.0 Ø	S262
91	2N4176	50	5.0	70C	60m$	50m$	2.5 $	2.0m	100C							100 *	100C	5.0 Ø	S263
92#	2SF261	50	5.0	73C	10mØ	30m	2.5	3.0mØ	100J	1.3	5 0					90	100J	5 Ø	S141b
93#	2SF261A	50	5 0	73C	10mØ	30m	2.5	3.0mØ	100J	1.3	5.0		5 0	15u⊠	100 △	90	100J	5.0 Ø	S141b
94	2N4152	50	5.0	75C	60m$	50m$	2.5 $	2.0m	100C							100 *	100C	5.0 Ø	C84
95	2N4160	50	5.0	75C	60m$	50m$	2.5 $	2.0m	100C							100 *	100C	5.0 Ø	C85
96	2N4184	50	5 0	75C	60m$	50m$	2.5 $	2.0m	100C							100 *	100C	5.0 Ø	S264
97	2N4192	50	5.0	75C	60m$	50m$	2.5 $	2.0m	100C							100 *	100C	5.0 Ø	M363
98	2N4441	50	5.0	75	70m§	60m§	2 5 §	2.0m	100	2.5	15					80	100A	.50	M386
99#	CR8-05	50	5 0	75C	30m	30m	2.0	2.0m	100J	2.0	15	1.0u	5.0	30u		120	100	5.0	M408
100	RTN0205	50	5.0	80C	100m	50m	3 0	2.0m	100	2.5	15	.20u	5 0		100	60	100C		TO64
101	RTN0305	50	5 0	80C	25m	15m	1.5	1.0m	100	1.8	15	.20u	5.0		100	60	100C		TO64
102	RTN0405	50	5 0	80C	100m	50m	3.0	2 0m	125	2.5	15	.20u	5 0		100	60	125C		TO64
103	RTN0505	50	5 0	80C	25m	15m	1 5	1.0m	125	1.8	15	.20u	5 0		100	60	125C		TO64
104	RTN0605	50	5.0	80C	25m	15m	1 5	1 0m	150	1.8	15	.20u	5 0		100	60	150C		TO64
105	RTR0505	50	5.0	80C	25m	15m	1.5	1 0m	125	2.0	15	.20u	5 0		100	60	125C		TO66
106	RTS0205	50	5.0	80C	100m	50m	3.0	2 0m	100	2.5	15	.20u	5 0		100	60	100C		M94
107	RTS0305	50	5.0	80C	25m	15m	1 5	1 0m	100	1 8	15	.20u	5 0		100	60	100C		M94
108	RTS0405	50	5 0	80C	100m	50m	3 0	2.0m	125	2 5	15	.20u	5 0		100	60	125C		M94
109	RTS0505	50	5 0	80C	25m	15m	1 5	1 0m	125	1 8	15	.20u	5 0		100	60	125C		M94
110▼	TIC106F	50	5.0	80	5.0m	200u	1 0	1 0m	110C	1.7	5.0				10 Ø	30	110C	1 3	

SYMBOLS AND CODES EXPLAINED IN INTERPRETER

6. SILICON CONTROLLED RECTIFIERS

IN ORDER OF (1) PEAK REV. VOLT., (2) MAX. CONT. CUR., (3) TEMPERATURE, (4) TYPE No.

LINE No.	4 TYPE No.	1 PRV and VBO (V)	MAX. CONT. CURRENT 2 Idc (A)	3 at TEMP (°C)	MAX. HOLD. CUR Ih @ 25°C (A)	MAX. GATE FIRING SPEC at 25°C Igf (A)	Vgf (V)	MAX SAT I Ir@PRV and Is@VBO (A)	at TEMP (°C)	MAX. FWD. VOLT. DROP at 25°C Vf (V)	@ If (A)	SWITCHING TIME at 25°C Ton (s)	for If (A)	Toff (s)	MIN. dV/dt @ 25°C (V/us)	ABS. MAX. RATINGS 1Cy PK SURGE I@25°C (A)	MAX TEMP (°C)	MAX GATE POWER (W)	DWG. No.
1▼	HEP300-RT	50	5.0	100J	10mØ§	30m§										80 §	100		S230
2	B01422	50	5.4	80C	20m	15m	1.5	1.5m	100C	1.6		1.5u	2.0	25u	30 §	100 §		500mt	M507
3	B05422	50	5.4	80C	20m	15m	1.5	1.5m	100C	1.6		1.5u	2.0	25u	30 §	100 §		500mt	S307
4	B18042	50	5.4	80C	20m	15m	1.5	1.5m	100C	1.6		1.5u	2.0	25u	30 §	100 §		500mt	
5	B19042	50	5.4	80C	20m	15m	1 5	1.5m	100C	1.6		1.5u	2.0	25u	30 §	100 §		500mt	
6▼	S0508B	50	5.4	80C	20m	15m	1.5	1.0m	100C	1.6	33	1 5u	2 0	25u§	30 §	100 §	125A	500mt	S307
7▼	S0508G	50	5.4	80C	20m	15m	1.5	1.0m	100C	1.6	33	1.5u	2.0	25u§	30 §	100 §	125A	500mt	M605
8▼	S0508H	50	5.4	80C	20m	15m	1.5	1 0m	100C	1.6	33	1.5u	2.0	25u§	30 §	100 §	125A	500mt	S361
9▼	S0508L	50	5.4	80C	20m	15m	1 5	1.0m	100C	1.6	33	1.5u	2.0	25u§	30 §	100 §	125A	500mt	M507
10#	2SF222	50	6.0	25C		25m	3.0	3.8m	100C	1.2 △	3 0					50	100	5 Ø	S141
11#	TM510	50	6.0	25A	40mØ	40m	3.0	3 0m	110J	2.0	20	2.0u§	6.0	50u§	50 Ø§	100		120m	S141d
12#	TRA05	50	6.0	25A	50mØ	40m	3 0	3.0m	110J	2.0	20	2.0u§	6.0	50u§	50 Ø§	100		120m	M94g
13#	TRA05D	50	6.0	25A	50mØ	40m	3 0	3.0m	110J	2.0	20	2.0u§	6.0	50u§	50 Ø§	100		120m	S131
14	NCF050C	50	6.0	70B$		30m$	2.0 $	4 5mØ	60C	1.9 $	4.7			12uⱯ		60	100A	.50	S17
15	T006	50	6.0	70	50m	80m	5.0			2.2		2.5u			30	100	100J		M94
16	T006-5	50	6.0	70	50m	80m	5.0			2 2		2.5u			30 Ø	100	100J		T05
17	T006-66	50	6 0	70	50m	80m	5.0			2.2		2.5u			30 Ø	100	100J		T066
18	T006S	50	6.0	70	50m	80m	5.0			2.2		2.5u			30 Ø	100	100J		S131
19#	CR5-051B	50 †	6.0	95C	150m	80m	3 0	10m	125C	3.0	5 0	2.0u	5.0	12u			125C	1.0	T048
20#	TP504	50	6 0	100C	100m	40m	3.0	3.0m		1.2	4.0	2.0u	4.0	30u	100 §Ø	80	125C	.50	S18a
21#	4RCM5	50	6 3	85B	45m	85m	3.0	4.5m	105	1 9	4 0			20u	20	50	105	.50	T064
22	B01429	50	6.35	80C	20m	15m	1.5	1.5m	100C	1.6		1.5u	2.0	25u	30 §	100 §		500mt	M507
23	B05429	50	6.35	80C	20m	15m	1 5	1.5m	100C	1.6		1.5u	2.0	25u	30 §	100 §		500mt	S307
24	B18052	50	6.35	80C	20m	15m	1 5	1.5m	100C	1.6		1 5u	2.0	25u	30 §	100 §		500mt	
25	B19052	50	6.35	80C	20m	15m	1 5	1.5m	100C	1.6		1.5u	2.0	25u	30 §	100 §		500mt	
26▼	S0510B	50	6.35	80C	20m	15m	1.5	1.0m	100C	1.6	41	1.5u	2.0	25u§	30 §	100 §	125A	500mt	S307
27▼	S0510G	50	6.35	80C	20m	15m	1 5	1 0m	100C	1.6	41	1.5u	2 0	25u§	30 §	100 §	125A	500mt	M605
28▼	S0510H	50	6.35	80C	20m	15m	1.5	1.0m	100C	1.6	41	1.5u	2 0	25u§	30 §	100 §	125A	500mt	S361
29▼	S0510L	50	6.35	80C	20m	15m	1.5	1.0m	100C	1.6	41	1 5u	2 0	25u§	30 §	100 §	125A	500mt	M507
30#	2SF1115	50	6.5	25	6.0	28m	2 0	2.0	125J	1.4	10		3.0	20	50	50	125J	500m	C63c
31#	2SF11	50 ⧄	6.5	60B		20m	2.1	9.0m	100J	2.3	20					50	100J	.50	S105a
32#	GC0505	50	7.0	25A	100mØ	100m	3.0	1.5m		2 0	5 0					35	100J	25	T048
33	5TCRB	50 ⧄	7.0	60B	50m	50m	3.0	4.5mØ	125J	.83 Ø	5.0 §	2.0u	5 0	30u		60 *	150S	5 Ø	S56
34	SCR50A	50 ⧄	7.0	60C	25m	20m	2 0	1.0m△	125C	1.9 △	15	1.0u§	100	20u§		100 §	125J	10	S121
35	SCRF50A	50 ⧄	7.0	60C	50m	20m	2.0	1.0m△	125C	1.9 △	15	2 0u§	10	6.0u§		100 §	125J	10	S121
36	SCRF505	50 ⧄	7.0	60C	50m	25m	2 0	1 0m	125C	1.9 △	15	2.0u§	10	12u§		100 §	125J	10	S121
37	TI3010	50	7 0	60C	30m	25m	3 0	1.0m	125	1.8	5 0						125C	5.0 Ø	M245
38	C12F	50	7.0 △	70C	8 0mØ	15m	2 0	9.0m	125J	1.8	15	1.0u	10	12u§		60	125J	5.0	S17
39#	T5F50	50	7.0	75	20m	35m	3.0	10m	90J	2.5	25	2.0u	5 0	20u	20	15	45A	.20	S155
40	2N5164	50	7.0	85C	90m§	75m$	2 5 §	5.0m	100C	1.7 †	41					240 *	100C	.5 †	M94b
41	2N5168	50	7.0	85C	90m§	75m$	2.5 §	5.0m	100C	1.7 †	41					240 *	100C	.5 †	S131c
42	JAN2N1771A	50	7.0	105	25m	30m	2.0	1.0m	25	1.8	14 †	5.0u	5 0	30u	5 0	60	150A		T064
43	5RC5	50 ⧄	7.4 △	60C	5.0mØ	15m	2 0	4 5m	105C	1.9	15 †	2.5u	60		20	60 △	105J	.50 †	T064
44	5RCF5A	50 ⧄	7.4 △	60C	5.0mØ	15m	1 4	4.5m	125C	1.9	15 †	2.5u	5 0	12u		60 △	125J	.50 †	T064
45	C20F	50	7.4 △	80	30m	25m	1 5	10m	100J	1 8	10					80 §	100J	.50	S131
46	C22F	50	7.4 △	80	30m	25m	1 5	10m	100J	1.8	10					80 §	100J	.50	M94
47#	CR4-051A	50 †	7.4 △	80	30m	25m	2.0	10m	100J	1.8	10	1.1u	8 0	50u	20 △	80 △	125J	5.0 Ø	M94
48#	CR4-051B	50 †	7.4 △	80	30m	25m	2 0	10m	100J	1 8	10	1.1u	8 0	50u	20 △	80 △	125J	5.0 Ø	S131
49	2N3753	50	7.5	100	200m	200m	2 3	6.0m	120A				10	75u	200	250 *	120A	2.0	T048
50	C122F	50	8.0		30m	25m	1.5	2.0m	100C	2.2 †	16				40 Ø	80	100J		M490
51#	SF5A11	50	8.0	24		20m	2 0	9.0m	125J	2.0	20					60	125J	500m	S141a
52	MCR2315-2	50 △	8.0 △	70C	50m	40m	1.5	3.0m	100J	1.6	5.0	1.0u	5 0	15u	50 Ø§	80 △	100J	5.0 Ø	S230
53	MCR2614L2	50 △	8.0 △	70C	50m	40m	1.5	3.0m	100J	1.6	5.0	1.0u	5 0	15u	50 Ø§	80 △	100J	5.0 Ø	C85a
54▼	TIC116F	50	8.0	70	40m	20m	1.5	2.0m	110C	1.7	8 0				100 Ø	80	110C	5.0	
55▼	HEPR1220-RT	50	8.0	100J	10mØ§	10m§										80 §	100		M386
56▼	HEPR1241-RT	50	8.0	100J	25mØ§	20m§										100 §	100		S230
57	MCR2604-2	50	8.0	100J	25m	20m	1.5	2.0m	100J	1 3	5.0	1.0u	5.0	12u	50	100	100J	5.0	M304a
58	MCR2605-2	50	8.0	100J	25m	20m	1.5	2.0m	100J	1.3	5.0	1.0u	5.0	12u	50	100	100J	5.0	M305
59#	TP506	50	9.0	100C	100m	40m	3 0	3.0m		1.2	6.0	2.0u	6 0	30u	100 §Ø	100	125C	.50	S18a
60	NCF050D	50	10		15mØ	50m	3.5	5.0m	100	1.2	10	500n	10	6.0u	25 §	125	100A	.50 †	T048
61#	TRA105	50	10	25A	50mØ	80m	3 0	3.0m	110J	2.0	30	2.0u§	10	50u§	50 Ø§	125		240m	M94g
62#	TRA105D	50	10	25A	50mØ	80m	3.0	3.0m	110J	2.0	30	2.0u§	10	50u§	50 Ø§	125		240m	S131
63	2N1843	50	10 △	35C		150m$	3.5 $	19mØ	35C	2.5 †	10					125 *	100C	5 †	T048
64#	2SF271	50	10	63C	10mØ	30m	2.5	3.0mØ	100J	1.2	10					90	100J	5 Ø	S141b
65#	2SF271A	50	10	63C	10mØ	30m	2.5	3.0mØ	100J	1.2	10		10	15mⱯ	100 △	90	100J	5.0 Ø	S141b
66	RTT0105	50	10	65C	200m	50m	3 0	2.0m	100	2.5	30	.20u	10		100	100	100C		T048
67	RTT0405	50	10	65C	200m	50m	3.0	2.0m	125	2.5	30	.20u	10		100	100	125C		T048
68	RTU105	50	10	65C	.20	50m	3 0	2.0m	100	2 5	30	200n	10		100	100	100C		S131
69	RTU0405	50	10	65C	200m	50m	3.0	2 0	125	2.5	30	200n	10		100	100	125C		S131
70	T010	50	10	70	60m	100m	5 0			2.2		3 0u			30 Ø	100	100J		M94
71	T010S	50	10	70	60m	100m	5 0			2 2		3.0u			30 Ø	100	100J		S131
72	2N1843A	50	10 △	80C		150m$	3 7 $	19mØ	80C	2 5 †	10					125 *	125C	.5 †	T048
73	B01436	50	10	80C	20m	20m	1 5	1.5m	100C	1.6		1.5u	2.0	25u	30 §	150 §		600mt	M507
74	B05436	50	10	80C	20m	20m	1.5	1.5m	100C	1.6		1.5u	2 0	25u	30 §	150 §		600mt	S307
75	B18062	50	10	80C	20m	20m	1.5	1.5m	100C	1.6		1.5u	2.0	25u	30 §	150 §		600mt	
76	B19062	50	10	80C	20m	20m	1.5	1.5m	100C	1.6		1.5u	2.0	25u	30 §	150 §		600mt	
77▼	S0516B	50	10	80C	20m	20m	1.5	1.0m	100C	1.6	64	1.5u	2.0	25u§	30 §	150 §	125A	600mt	S307
78▼	S0516G	50	10	80C	20m	20m	1.5	1.0m	100C	1.6	64	1.5u	2 0	25u§	30 §	150 §	125A	600mt	M605
79▼	S0516H	50	10	80C	20m	20m	1 5	1.0m	100C	1 6	64	1.5u	2 0	25u§	30 §	150 §	125A	600mt	S361
80▼	S0516L	50	10	80C	20m	20m	1.5	1.0m	100C	1.6	64	1 5u	2 0	25u§	30 §	150 §	125A	600mt	M507
81#	CR8-051C	50 †	12	70C	15mØ	25m	2.5	2.5m	125J	2.0	20	1.1u	8 0	50u	20 △	80 △	125J	5.0 Ø	T064
82▼	TIC126F	50	12	70	40m	20m	1.5	2.0m	110C	1.4	12				100 Ø	100	110C	5.0	
83#	CR10-051B	50 †	12	85C	150m	80m	3.0	10m	125C	2 0	10	2.0u	10	30u			125C	1.0	T048
84#	8RCM5	50	12.6	65B	65m	85m	3.0	6 5m	105	2.6	8 0			20u	20	100	105	.50	T048
85#	8RCV5	50	12.6	105	50m	45m	2.9	6 5m	105	2.6			100	10u	100	100	105	50	T048
86	2N1843B	50	13 △	80C		75m	3 7 $	1 0mØ	125C	1.8 †	13					150 *	125C	.5 †	T048
87#	2SF72	50	15	25C		50m	3.0	19m	100C	1.2 △	7 0					100	100	5 Ø	S94
88	T015	50	15	70	60m	100m	5.0			2.2		3 0u			30 Ø	100	100J		M94
89	T015S	50	15	70	60m	100m	5.0			2.2		3 0u			30 Ø	100	100J		S131
90▼	HEP304-RT	50	15	100J	10mØ§	50m§										200 §	100		S131q
91▼	HEP305-RT	50	15	100J	10mØ§	50m§										200 §	100		S131qⱯ
92	B15002	50	15.8	80C	25m	25m	2.0	1 5m	100C	1.6		1 8u	2 0	25u	30 §	200 §		800mt	M505
93	B16002	50	15.8	80C	25m	25m	2 0	1.5m	100C	1.6		1 8u	2.0	25u	30 §	200 §		800mt	M504
94	B17002	50	15.8	80C	25m	25m	2.0	1 5m	100C	1.6		1.8u	2.0	25u	30 §	200 §		800mt	S308
95	B18002	50	15.8	80C	25m	25m	2.0	1 5m	100C	1.6		1.8u	2 0	25u	30 §	200 §		800mt	
96	B19002	50	15.8	80C	25m	25m	2 0	1 5m	100C	1.6		1.8u	2 0	25u	30 §	200 §		800mt	
97▼	S0525	50	15.8	80C	25m	25m	2 0	1 0m	100C	1.6	100	1 8u	2 0	25u§	30 §	225 §	125A	800mt	M606
98▼	S0525C	50	15.8	80C	25m	25m	2 0	1 0m	100C	1.6	100	1.8u	2.0	25u§	30 §	225 §	125A	800mt	M607
99▼	S0525D	50	15.8	80C	25m	25m	2 0	1 0m	100C	1.6	100	1.8u	2.0	25u§	30 §	225 §	125A	800mt	S362
100▼	S0525G	50	15.8	80C	25m	25m	2.0	1 0m	100C	1.6	100	1.8u	2.0	25u§	30 §	225 §	125A	800mt	M605
101▼	S0525H	50	15.8	80C	25m	25m	2.0	1 0m	100C	1.6	100	1 8u	2 0	25u§	30 §	225 §	125A	800mt	S361
102#	TR05	50	16	25A	50mØ	80m	3.0	3.0m	125J	2.0	50	2.0u§	10	50u§	50 Ø	250		240m	S313
103#	TR515S	50	16	25A	100mØ	80m	3 0	5 0m	125J	2.5	50	2 0u§	10	20u§	200 §	250		240m	S313
104#	TRA205	50	16	25A	50mØ	80m	3 0	3 0m	110J	2.0	50	2.0u§	10	50u§	50 Ø§	250		240m	M94g
105#	TRA205D	50	16	25A	50mØ	80m	3 0	3 0m	110J	2.0	50	2 0u§	10	50u§	50 Ø§	250		240m	S131
106#	SF10A11	50	16	26		80m	3 5	38m	100C	3.0	50					113	100J	500m	S18
107	2N682	50	16 △	65C		80m$	3.0 $	6.5mØ	125C	2.0 Ø	16					150 *	125C	.50	T048
108	JAN2N682	50	16 △	65C	50m	80m	3.0	2 0m	25	2.0 †	50	5 0u	10	30u		150	125A	.5 †	T048
109	10RC5	50 ⧄	16 △	65C	10mØ	40m	3.0	6.5mØ	105C	2 3 †	31					125 △	105J	.50 †	T048
110	RTT0205	50	16	65C	200m	50m	3.0	2.0m	100	2 5	50	20u	16		100	150	100C		T048

SYMBOLS AND CODES EXPLAINED IN INTERPRETER

6. SILICON CONTROLLED RECTIFIERS

IN ORDER OF (1) PEAK REV. VOLT., (2) MAX. CONT. CUR., (3) TEMPERATURE, (4) TYPE No.

LINE No	4 TYPE No.	1 PRV and VBO (V)	MAX. CONT. CURRENT 2 Idc (A)	3 at TEMP (°C)	MAX. HOLD. CUR Ih at 25°C (A)	MAX GATE FIRING SPEC at 25°C Igf (A)	Vgf (V)	MAX SAT I Ir@PRV and Is@VBO (A)	at TEMP (°C)	MAX. FWD. VOLT. DROP at 25°C Vf (V)	@ If (A)	SWITCHING TIME at 25°C Ton (s)	for If (A)	Toff (s)	MIN. dV/dt @ 25°C (V/us)	ABS. MAX. RATINGS 1Cy PK SURGE I@25°C (A)	MAX TEMP (°C)	MAX GATE POWER (W)	DWG. No.
1	RTT0305	50	16	65C	50m	25m	2.0	1 0m	100	2.0	50	.20u	16		100	150	100C		TO48
2	RTT0505	50	16	65C	200m	50m	3.0	2 0m	125	2 5	50	.20u	16		100	150	125C		TO48
3	RTT0605	50	16	65C	50m	25m	2.0	1.0m	125	2 0	50	.20u	16		100	150	125C		TO48
4	RTU0205	50	16	65C	.20	50m	3.0	2 0m	100	2 5	50	200n	16		100	100	100C		S131
5	RTU0305	50	16	65C	50m	25m	2.0	1.0m	100	2 0	50	200n	16		100	150	100C		S131
6	RTU0505	50	16	65C	20	50m	3.0	2.0	125	2 5	50	200n	16		100	100	125C		S131
7	RTU0605	50	16	65C	50m	25m	2.0	1 0m	125	2 0	50	200n	16		100	150	125C		S131
8	2N3649	50	16	70	350m$	500m$	4.5	6 0m	120				100	15u	200	180 *	120C	1 0	TO48
9	2N3654	50	16	70	350m$	500m$	4.5	6.0m	120				100	10u	200	180 *	120C	1.0	TO48
10	MCR3818-2	50	16	70C	50m	40m	1.5			1 2	20	1.0u	20	15u	50 Ø§	240 §	100J	500m†	M94b
11	MCR3918-2	50	16	70C	50m	40m	1 5			1.2	20	1.0u	20	15u	50 Ø§	240 §	100J	500m†	S131k
12	C36F	50	16 △	100	20mØ	50m	3.5	19m	100J	1.2		4.5u☑	10	20 ☑		125	100B	.50	S18
13▼	HEPR1301-RT	50	16	100J	10mØ§	10m§										250 §	100		S131r
14	16C050	50	16	125J	50m	15m	2.0	10m	125J	2.0	50	7 0u	16	75u§		150	125J	5.0 Ø	TO48#△
15	16C050B	50	16	125J	50m	40m	2.0	10m	125J	2.0	50	7 0u	16	75u§	25	150	125J	5 0 Ø	TO48#△
16	16C050C	50	16	125J	50m	40m	2.0	10m	125J	2.0	50	7.0u	16	75u§		150	125J	5.0 Ø	TO48#△
17	2N682A	50	18 △	65C	50m$☑	40m	3.0 $	1.0mØ	65C	2.1 †	18				200	250 *	125C	5 †	TO48
18	TIX90	50	18	75C	40m	40m	3 5	1.0m	125	1.6	18				100		125C	5.0 Ø	M246
19#	12RCM5	50	18.8	65B	65m	85m	3.0	6.5m	105	2 2	12			20u	20	150	105	.50	TO48
20#	2SF291	50	20	58C	10mØ	50m	3.5	3.0mØ	100	1.3	20					300	100J	5 Ø	S106b
21#	2SF291A	50	20	58C	10mØ	50m	3.5	3 0mØ	100	1.3	20		20	15u☑	100 △	300	100	5.0 Ø	S106b
22	MCR649-2	50 ☑	20	65C		80m	3.5	5 0mΔ	100	.70 Ø	13 §					260 △	100J	5 Ø	TO41
23#	CR16-051B	50 †	20	75C	120m	40m	3.0	10m†	125C	2.0	16	2.0u	10	30u			125C	1.0	TO48
24	B15022	50	22	80C	40m	25m	2.0	1 5m	100C	1.6		1 8u	2 0	25u	30 §	300 §		800m†	M505
25	B16022	50	22	80C	40m	25m	2.0	1.5m	100C	1.6		1 8u	2 0	25u	30 §	300 §		800m†	M504
26	B17022	50	22	80C	40m	25m	2 0	1 5m	100C	1.6		1.8u	2.0	25u	30 §	300 §		800m†	S308
27	B18022	50	22	80C	40m	25m	2.0	1 5m	100C	1.6		1.8u	2.0	25u	30 §	300 §		800m†	
28	B19022	50	22	80C	40m	25m	2 0	1.5m	100C	1.6		1.8u	2.0	25u	30 §	300 §		800m†	
29▼	S0535	50	22	80C	40m	25m	2 0	1 0m	100C	1 6	141	1.8u	2.0	25u§	30 §	325 §	125A	800m†	M606
30▼	S0535G	50	22	80C	40m	25m	2 0	1 0m	100C	1.6	141	1.8u	2.0	25u§	30 §	325 §	125A	800m†	M605
31▼	S0535H	50	22	80C	40m	25m	2.0	1.0m	100C	1.6	141	1 8u	2.0	25u§	30 §	325 §	125A	800m†	S361
32#	TS035	50	22 5	25A	20mØ	80m	3 0	6 0m	125J	2.2	70	5 0u§	15	50u§	50 Ø§	250		240m	S313
33	T025	50	25		60m	100m	5 0			2.2		3 0u				250	100J		M94
34	T025S	50	25		60m	100m	5 0			2.2		3.0u				250	100J		S131
35#	2SF132	50	25	25C		50m	3.0	19m	125C	1 2 △	12					150	125	5 Ø	S94
36	C37F△	50	25 △	25C		80m	3 5	13m	105	2.3	30					125	105C	.50	TO48
37	10RCF5A	50 ☑	25 △	45C	10mØ	90m	2 5	6.5mØ	125C	2.8	50 †	3.0u	10	12u§	25 §	200 △	125J	500m†	TO48
38#	SF16A11	50	25	57		40m	3 0	13m	125C	1.9	50					135	125J	500m	S18
39	TI3037	50 †	25 △	60C	130mØ	100m	4.0	3.0m	125C	2.5	25	2 5u	25	2.9u	200	200	125C	5 Ø	TO48
40	C30F	50	25 △	70C	50m	25m	1 5	10m	100J	1.5	50					250	100J	50	S131
41	C31F	50	25 △	70C	50m	9 0m	1.5	10m	100J	1.5	50					250	100J	50	S131
42	C32F	50	25 △	70C	50m	25m	1.5	10m	100J	1.5	50					250	100J	50	M94
43	C33F	50	25 △	70C	50m	9.0m	1.5	10m	100J	1.5	50					250	100J	.50	M94
44	C34F1	50	25	70	50m	25m	1.5	1.0m	100	1.5	50		35	20u☑	20	250	100J	5.0 Ø	M94
45	C34F2	50	25	70	50m	25m	1 5	1.0m	100	1.5	50		35	20u☑	20	250	100J	5.0 Ø	S131
46	2N2574	50	25	85C		80m$	3 5 $	2.5mØ	125C	.70 §	16					260 §	125C	.50	TO41
47	MCR1907-2	50 △	25	125J	12m	30m	1 5	4.0m	125J	1 7	20	.50u	10	12u☑	30 §	150	125J	.5 †	TO48
48#	CR25-051B	50	32	25	26m	40m	3.0					2 5u	25	150u		210	125	5.0	TO48
49	C40F△	50	35 △	18B	100m	40m	3 0	10mΔ	25J	2.0 △	50			12u		150	125J	5.0	TO48
50	SCR160A	50 ☑	35	25C	50m	25m	2.0	6.0mΔ	125C	2.0	50	1.0u§	200	20u§		200 §	125J	15	TO48
51	SCRF160A	50 ☑	35	25C	100m	25m	2.0	6 0mΔ	125C	2.0	50	20u§	10	6.0u§		200 §	125J	15	TO48
52	SCRF1605	50 ☑	35	25C	100m	40m	3.0	6.0mΔ	125C	2 0	50	2 0u§	10	12u§		200 §	125J	15	TO48
53	16RC5A	50 ☑	35 △	35C	20mØ	40m	2 0	6 5mØ	125C	2 3	70 †		10	75u§	25 §	250 △	125J	5C †	TO48
54	16RCF5A	50 ☑	35 △	35C	20mØ	40m	2 0	3.0mØ	125C	2.3	70 †		10	12u§	25 §	250 △	125	.50 †	TO48
55	18RC5	50 ☑	35 △	45C	20mØ	40m	2 0	6.5mØ	125C	2.0	70 †					350 △	125J	.50 †	TO48
56	MCR3835-2	50	35	47C	50m	40m	1 5			1.2	35	1.0u	35	15u	50 Ø§	325 §	100J	500m†	M94b
57	MCR3935-2	50	35	47C	50m	40m	1.5			1 2	35	1.0u	35	15u	50 Ø§	325 §	100J	500m	S131k
58	C38F△	50 ☑	35	56C	80m	40m	3 0	10m	25J	2 0 △	50	1 4u	5 0	24u	20	150	150C	12	TO48
59	22RC5	50 ☑	35 △	70C	20mØ	40m	2 0	6.5mØ	150C	2.3	70 †				20	225 △	150J	500m†	TO48
60	C38F☑	50	35	87C	80m	40m	2.5	5 0m	150J	2.0 †	50	1 4u	5 0	24u§	20	200	150J	500m†	TO48
61	NLC38F	50	35	90C	80m	40m	2.5	5.0m	150J	2 0	50	1 4u	5 0	24u	20	200	150J	.50 †	TO48
62▼	HEPR1471-RT	50	35	100J	10mØ§	10m§										325 §	100		S131r
63	35C05B	50	35	125J	50mØ	200m	2.5	10m	125J	2.5	220	10u	35	40u	100	900	125J	5.0 Ø	TO49
64	35C050	50	35	125J	200m§	200m	3.0	10m	125J	2.5	220	10u	35	40u§		900	125J	15 Ø	TO94#△
65	35C050B	50	35	125J	200m§	200m	3 0	10m	125J	2.5	220	10u	35	40u§	100	900	125J	15 Ø	TO94#△
66	35C050BF	50	35	125J	200m§	200m	3.0	10m	125J	2.5	220	10u	35	40u§	100	900	125J	15 Ø	TO83#△
67	35C050F	50	35	125J	200m§	200m	3 0	10m	125J	2.5	220	10u	35	40u§		900	125J	15 Ø	TO83#△
68#	CR30-053A	50	36	25	66m	60m	3.0			1 4	30	20u	30	73u		500	125	5.0	TO49
69♦	40RCS5	50 ☑	40	87C	200m	110m	3.0	3.5m	105J	1.7 †	40	4.5u	10		25 §	1.0k§	105J	500m†	S363
70	251A	50	40	125J		100m	3.0	15m	125J	1.7	50	4 0u	50	100u	300	1.2k*	125J	3 †	Z59
71#	5TC05	50	50			10m	3 0										150		
72	C145F	50	55 △			100m	3.0										125A		S236
73	C146F	50	55 △			100m	3.0							40u☑			125A		S236
74	C147F	50	55 △			100m	3.0							10u☑			125A		S236
75#	TK05	50	55	60C	100m	125m	3.0	10m		2.0	100	5.0u	50	30u	20 Ø	700	100C	.50	TO49
76	C45F△	50	55 △	85C	100m	75m	3.0	10m	120C	3.1 △	500	5.0u	50	30u§	30 §	700	125J	500m	S315
77	C46F△	50	55 △	85C	100m	75m	3.0	10m	120C	3.1 △	500	5 0u	50	30u§	30 §	700	125J	500m	TO94
78	2191A	50	55	94C		200m	3.0	10m	125J	2.0 §	50	3.5u	50	15u	100	1.2k*	125J	3 †	Z59
79	2192A	50	55	94C		200m	3 0	10m	125J	2 0 §	50	8.0u	50	20u	100	1.2k*	125J	3 †	Z59
80	555F	50	55	99C		150m	3.0								200		125J		TO49
81	556F	50	55	99C		150m	3.0								200		125J		TO83
82	2515A	50	63	120C		10	3.0	15m	150J	1.7	50				300	1.2k	150J		TO83
83#	CR50-053A	50	64	25	73m	100m	3.0									600	125	5.0	TO49
84	2N2031	50	70 △	60		130m$	3.0 $	6.5mØ	60	1 8 †	70	15u	80m			1.0k*	125	.50 †	TO49
85	2N1910	50	70 △	62C		130m$	3.0 $	6.5mØ	62C	1.9 †	70					1.0k*	125C	.50	TO49
86	2N2024	50	70 △	85C		150m$	3.0 $	6.5mØ	85C	1 9 †	70					1.0k*	150C	.50	TO49
87	NLC62F	50	70	103C	.10	70m	2.5	8.0m	150J	2.5	500	5.0u	50	50u		1.6k	150J	.50 †	TO83
88	70C05B	50	70	125J	200m§	140	5.0	10m	125J	1 8	220	10u	70	40u	100	1.6k	125J	15 Ø	TO49
89	70C050	50	70	125J	200m§	200	3.0	10m	125J	1 8	220	10u	70	40u§		1 6k	125J	15 Ø	TO94#△
90	70C050B	50	70	125J	200m§	150	3.0	10m	125J	1 8	220	10u	70	40u§	100	1.6k	125J	15 Ø	TO94#△
91	70C050BF	50	70	125J	200m§	150	3.0	10m	125J	1 8	220	10u	70	40u§	100	1 6k	125J	15 Ø	TO94#△
92	70C050CF	50	70	125J	200m§	100	2.0	10m	125J	1 8	220	10u	70	40u§		1 6k	125J	15 Ø	TO83#△
93	70C050F	50	70	125J	200m§	200	3.0	10m	125J	1 8	220	10u	70	40u§		1 6k	125J	15 Ø	TO83#△
94	TCR550	50	80	70C	25mØ	50m	3.0	4.0mØ	100C	75 Ø	50 §	4.5u		18u		1.0k	125C	1.0	S147
95	36RC5A	50 ☑	80 △	75C	20 Ø	700m	2.5	6 5mØ	125C	2.2 †	160					850 △	125J	2.0 †	TO94
96	36RCF5A	50 ☑	80 △	75C	20 Ø	700m	2 5	6.5mØ	125C	2 2 †	160		50	20 §		850 △	125J	2.0 †	TO94
97	37RC5A	50 ☑	80 △	75C	20 Ø	700m	2.5	6 5mØ	125C	2.2 †	160					850 △	125J	2.0 †	TO83
98	37RCF5A	50 ☑	80 △	75C	20 Ø	700m	2.5	6 5mØ	125C	2.2 †	160			20 §		850 △	125J	2.0 †	TO83
99	51RCG5	50 ☑	80 △	75C	100m	150m	2 5	15mØ	125C	2.5 †	160		50	20u	100 §	1.2k△	125J	3.0 †	TO94
100	52RCG5	50 ☑	80 △	75C	100m	150m	2 5	15mØ	125C	2.5 †	160			20u	100 §	1.2k△	125J	3.0 †	TO83
101	250A	50	80	125J		100m	3.0	15m	125J	1.3	50	4.0u	50	100u	300	1.6k*	125J	3 †	Z59
102#	10TC05	50	100			15m	3.0										150		
103	100C050	50	100	125J	200m	200m	2.5	25m	125J	2.0	500	10u	100	40u§		2.0k	125J	10 Ø	TO93#△
104	100C050B	50	100	125J	200m	200m	2 5	25m	125J	2 0	500	10u	100	40u§	100	2.0k	125J	10 Ø	TO93#△
105♦	JAN2N1792	50	110	60C	40m	70m	3 0	15m	125A	1.8	150	15u	50	40u		1.0k	125A	500m	TO83
106♦	JAN2N1910	50	110	60C	40m	70m	3 0	15m	125A	1.8	150	15u	50	40u		1.0k	125A	500m	TO49
107♦	JAN2N2031	50	110	60C	40m	70m	3 0	15m	125A	1.8	150	15u	50	40u		1.0k	125A	500m	TO49
108	2541A	50	110	60C		200m	3 0	10m	125J	1.7 §	50	3.5u	50	15u	100	1 4k*	125J	3 0 †	Z59
109	2542A	50	110	60C		200m	3 0	10m	125J	1 7 §	50	8.0u	50	20u	100	1.4k*	125J	3 0 †	Z59
110	C55F△	50	110 △	60C	100m	75m	3.0	10m	125J	2.5	500	5.0u	50	30u§	20 §	1 0k	125J	5.0	S91

SYMBOLS AND CODES EXPLAINED IN INTERPRETER

6. SILICON CONTROLLED RECTIFIERS

IN ORDER OF (1) PEAK REV. VOLT., (2) MAX. CONT. CUR., (3) TEMPERATURE, (4) TYPE No.

LINE No.	4 TYPE No.	1 PRV and VBO (V)	MAX. CONT. CURRENT 2 Idc (A)	3 at TEMP (°C)	MAX. HOLD. CUR Ih @ 25°C (A)	MAX. GATE FIRING SPEC at 25°C Igf (A)	Vgf (V)	MAX SAT I Ir@PRV and Is@VBO (A)	at TEMP (°C)	MAX. FWD. VOLT DROP at 25°C Vf (V)	@ If (A)	SWITCHING TIME at 25°C Ton (s)	for If (A)	Toff (s)	MIN. dV/dt @ 25°C (V/us)	ABS. MAX. RATINGS 1Cy PK SURGE I@25°C (A)	MAX TEMP (°C)	MAX GATE POWER (W)	DWG. No.
1	C56F△	50	110 △	60C	100m	75m	3 0	10m	125J	2.5	500	5.0u	50	30u§	20 §	1.0k	125J	5 0	S108
2	TK105	50	110	60C	100m	125m	3.0	10m		2.0	200	4.5u	50	20u	40 §Ø	1.0k	125C	.50	TO49
3	71RC5A	50 ☑	110 △	62C	20mØ	70m	2 5	6.5mØ	125J	1.9 †	220		50	30u§		1.0k△	125J	.5 †	TO94
4	71RCF5A	50 ☑	110 △	62C	20mØ	70m	2 5	6.5mØ	125J	1.9 †	220		50	20u§	25 △	1.0k△	125J	.50 †	TO94
5	72RC5A	50 ☑	110 △	62C	20mØ	70m	2.5	6.5mØ	125J	1.9 †	220		50	30u§		1.0k△	125J	.5 †	TO83
6	72RCF5A	50 ☑	110 △	62C	20mØ	70m	2 5	6.5mØ	125J	1.9 †	220		50	20u§	25 △	1.0k△	125J	.50 †	TO83
7	71RCG5	50 ☑	110 △	75C	100m	150m	2.5	15mØ	125C	2.4 †	220		50	15u	100 §	1.4k△	125J	3.0 †	TO94
8	72RCG5	50 ☑	110 △	75C	100m	150m	2 5	15mØ	125C	2.4 †	220			15u	100 §	1 4k△	125J	3 0 †	TO83
9	71RC5B	50 ☑	110 △	85C	20mØ	70m	2 5	6.5mØ	150J	2.2 †	220		50	40u§		1.0k△	150J	.5 †	TO94
10	72RC5B	50 ☑	110 △	85C	20mØ	70m	2 5	6 5mØ	150J	2.2 †	220		50	40u§		1.0k△	150J	.5 †	TO83
11	JAN2N2024	50	110	87C	40m	130m	3 0	15m	150C	1.6	200	5.0u☑	70	150u☑	20 △	1.0k	150A	500m†	S104b
12	C62F△	50	110 △	87C	100m	75m	3 0	15m	145C	2.5 △	1.5k	5 0u	50	50u		1.0k	150J	500m	S315
13	C60F	50	110	100C	100m	70m	2 5	8.0m	125J	2.5 †	500	5.0u	50	50u§		1.6k	150J	.5 †	TO49
14	C62F☑	50	110	100C	100m	70m	2.5	8 0m	125J	2.5 †	500	5 0u	50	50u§		1.6k	150J	.50 †	TO83
15#	2SF342	50	120	25C		100m	3 0	38m	125C	1.2 △	60					1.0k	125	10 Ø	S142
16	2505A	50	125	95C		10	3.0	15m	150J	1.3	50				300	1 6k	150J		TO83
17#	TT05	50	150	60C	300m	500m	3.0	25m	100J	2.2	350	5.0u	15		20 §Ø	2.0k	100C	1.0	S204
18	2N2503	50	150 △	80C	50m	150m$	3.0 $	10m	80C	1.4 †	150					3.5k*	125C	.20 †	TO93
19	2N2542	50	150	80C	50m§	150m§	3.0 §	7 5m	80C	1.5 †	150				4 0	3.5k§	125C	2.0 †	TO93
20	150C050	50	150	125J	200m	200m	2 5	25m	125J	1.7	500	10u	150	40u§		3.0k	125J	10 Ø	TO93#△
21	150C050B	50	150	125J	200m	200m	2 5	25m	125J	1 7	500	10u	150	40u§	100	3.0k	125J	10 Ø	TO93#△
22	101RC5	50 ☑	160 △	80C	50mØ	150m	2 5	10mØ	125J	1.7 †	314		150	25u§		2.0k△	125J	2 †	TO93
23	2N3884	50	175	80	20m	400m	4 0	15m	125	1.8	175					4 5k	125	3.0	TO93
24	2201A	50	175	125J		300m	4 0	15m	125J	1.3 §	100	4 0u	100	30u	100	4.0k*	125J	3.0 †	TO93
25	2202A	50	175	125J		300m	4 0	15m	125J	1 3 §	100	8.0u	100	40u	100	4.0k*	125J	3.0 †	TO93
26#	20TC05	50	200			50m	3 0										150		
27	2181A	50	200	80C		300m	4 0	15m	125J	1.3 §	100	4 0u	100	20u	100	3.3k*	125J	3 †	TO93
28	2182A	50	200	80C		300m	4.0	15m	125J	1.3 §	100	8 0u	100	30u	100	3 3k*	125J	3 †	TO93
29	2615A	50	200	105		15	3 0	15m	150J	1 4	100				200	3.3k	150		TO93
30	151RC5	50 ☑	235 △	62C	50mØ	100m	2.5	10mØ	125J	1.7 †	471		150	25u§		3.0k△	125J	2 †	TO93
31	151RC5A	50 ☑	235 △	80C	50mØ	100m	2 5	10mØ	125J	1.4 †	471		150	40u§		3 5k△	125J	2 †	TO93
32▼	151RF5	50 ☑	235	80C	200m	200m	2 5	15m	125C	1.9 †	471		250	20u§	200 §	4.2k△	125J	3 0 †	TO93
33#	TT205	50	235	80C	250m	500m	3.0	25m	125J	1.7	450	5.0u	15	200u	100 §Ø	3 2k	125C	1.0	S204
34	2N3353	50	250	80C	200m§	400m§	4.0 §	15m	125C	2 0 §	250 †					5.0k§*	125C	3 0 †	TO108
35	2605A	50	275	105		15	3 0	15m	150J	1 2	100				300	5 0k	125		TO93
36	MCR1336-5†	50 △	300	85C	50m	40m	1 2	2.0m	105	2 0	1 0		100	7.0u	250 §		105J	1 0 †	S258a
37	MCR1336-6†	50 △	300	85C	50m	40m	1 2	2 0m	105	2 0	1.0		100	7.0u	250 §		105J	1 0 †	S258a
38	MCR1336-7†	50 △	300	85C	50m	40m	1.2	2 0m	105	2 0	1 0		100	7 0u	250 §		105J	1.0 †	S258a
39	MCR1336-8†	50 △	300	85C	50m	40m	1 2	2.0m	105	2 0	1.0		100	7.0u	250 §		105J	1.0 †	S258a
40	MCR1336-9†	50 △	300	85C	50m	40m	1 2	2 0m	105	2.0	1 0		100	7.0u	250 §		105J	1 0 †	S258a
41	MCR1336-10†	50 △	300	85C	50m	40m	1 2	2 0m	105	2 0	1 0		100	7 0u	250 §		105J	1 0 †	S258a
42	2231A	50	300	125J		300m	4 0	15m	125J	1 3 §	100	4 0u	100	30u	100	4.5k*	125J	3 0 †	M247
43	2232A	50	300	125J		300m	4 0	15m	125J	1 3 §	100	8.0u	100	40u	100	4 5k*	125J	3.0 †	M247
44	2248A	50	300	125J		300m	4 0	10m	125J	1 0 §	100	5 0u	150	50u	100	5 0k*	125J	3.0 †	M308c
45	2N3530	50	400	20A	200m§	400m	4 0	15m	125J	1.9	250					5 0k	125J	16	M247
46	C291F△	50	470 △			150m	3.5										125A		S247a
47	6RW71AY	50	470	65C		250m	3.1	10mØ	125J	65 Ø	300				4.0	5 5k§	125	16	S132
48♦	C290F	50	470	65C	100m	150m	3 5			1 2	500	10u	5.0	250u§	100 §	5 5k	125J	3.0	S132
49	C291F☑	50	470	66C	100m	150m	3 0	15m	125J	1 2 †	500	5.0u	5 0	100u§	100 §	5 5k	125J	3.0 †	M331a
50#	CRS1/05AF	55	1.25	65C	20m	10m	3.0	1 0m△	125J	1 2	1.5	2 0u	1 0	15u	15	20	125J	1 0	TO5
51#	CRS3/05AF	55	4.5	90B	25m	20m	3 0	1 0m△	125J	1 3	4.5	2 0u	3.0	17u	15	55	125J	2 0	S62
52	JAN2N3028	60 †			5.0m	200u	800m	50n	25	1 5 †	1 0	200n	1 0	2 0u		8 0	150A		TO18
53	JAN2N3031	60 †			4 0m	20u	600m	50n	25	1 5 †	1 0	100n	1 0	2 0u		8 0	150A		TO18
54	2N4146	60			5 0m	1 0m	.80									8.0 *§	110A	.2 Ø	C41d
55	2N5788	60	120m	75A	10m$	350u	1.2 $	200u	125A	1 2	240m					4 0	125A	10m†	TO106
56	B151	60	20	75A	5.0m	20m	80			1.5	1 0	20u					125A		TO46
57	C6203	60	20	75A	5 0m	200u	.80	100u	100	1 5	.20						150		M185a
58	RTH0106	60	.20	80C	5 0m	20m	1.0	.10m	100	1 5	20	.20u	.20		100	5.0	100C		M443
59	RTH0206	60	20	80C	10m	1.0m	1.0	1 0m	125	2 5	20	20u	20		100	5 0	125C		M443
60	RTH0306	60	20	80C	10m	20m	1.0	50m	125	1 5	.20	.20u	.20		100	5 0	125C		M443
61	RTH0406	60	20	80C	5 0m	10m	80	10m	125	1.5	20	.20u	20		100	5 0	125C		M443
62	RTH0506	60	.20	80C	3.0m	02m	80	02m	125	1 3	20	20u	20		100	5 0	125C		M443
63	RTH0606	60	20	80C	2.0m	02m	70	.02m	125	1.2	.20	20u	20		100	5 0	125C		M443
64	2N5719	60	200m	90A	2.0m	20u	600m	100u	150A	1.4	400m			30u	100	5 0	150A	25m†	TO18
65	2N3256	60	25	55A	2.0m	20u	75	10u†	150	1 2	25	150n			30	1 0	150J		TO46
66	2N3259	60	25	55A	3 0m	200u	.75	10u†	150	1 2	.25	150n			30	1 0	150J		TO46
67	AA100△	60	25	75	2 0m	2 0u	60	2 0u	25	1 5	1 0	1.0u	1 0	20u	50	15	150		TO18
68	AA107	60	25	75A	2.0m	02m	60	2.0u	25A	1 5	1 0 †				50	15 §*	150A		TO18
69	AA114	60	25	75A	3.0m	200u	80	2 0u	25A	1.5	1 0 †				50	15 §*	150A		TO18
70	BA151☑	60	25	75A	5 0m	20m	80			1 5	1 0	.20u					150A		TO18
71	CB201	60	.25	75	3.0m	400u	80	5 0u	25	1 5	.50	1 0u	1 0	20u	50	5 0	150A		TO18
72	RTA0106	60	25	80A	5 0m	20m	1 0	10m	100	1 5	25	.20u	25		100	6.0	100A		TO46
73	RTB0106	60	25	80A	5 0m	200u	1 0	100u	100	1 5	25	200n	25		100	6 0	100A		TO52
74	RTB0206	60	25	80A	10m	1 0m		1.0m	125	2 5	25	200n	25		100	6 0	125A		TO52
75	RTB0306	60	.25	80A	10m	20m	1.0	50m	125	1 5	25	.20u	25		100	6 0	125A		TO52
76	RTB0406	60	25	80A	5 0m	.10m	80	.10m	125	1 5	25	.20u	25		100	6 0	125A		TO52
77	RTB0506	60	.25	80A	3 0m	.02m	80	02m	125	1.3	25	.20u	25		100	6 0	125A		TO52
78	RTB0606	60	25	80A	2.0m	.02m	70	.02m	125	1 2	.25	20u	25		100	6.0	125A		TO52
79	RTC0106	60	25	80A	5 0m	20m	1 0	10m	100	1 5	20	.20u	.25		100	6 0	100A		TO18
80	RTC0206	60	25	80A	10m	1 0m	1 0	1 0m	125	2 5	25	20u	25		100	6.0	125A		TO18
81	RTC0306	60	25	80A	10m	.20m	1 0	.50m	125	1 5	25	20u	25		100	6 0	125A		TO18
82	RTC0406	60	25	80A	5 0m	10m	80	10m	125	1.5	25	.20u	25		100	6 0	125A		TO18
83	RTC0506	60	25	80A	3.0m	02m	80	.02m	125	1.3	25	20u	25		100	6.0	125A		TO18
84	RTC0606	60	25	80A	2 0m	02m	.70	.02m	125	1 2	25	20u	.25		100	6 0	125A		TO18
85	2N5061	60	255m	102C	10m$	350u$	1 2 $	50u	125C	1.7	1 2					6 0	125C	10m†	TO92
86	2N949	60 †	26	125C	1 0m	02m	1 0	.02m	125C	2.0	20					1 0 §	150C	.02	TO18
87	2N886A	60	275	25	1.0m	50u	60	20u	125	1.5	20	1.2u	20	3 2u		1.0	150A		TO18
88	2N2684	60 △	28	55A	1 0m	20u	80	20u△	125A	1.2	.20				200	2 0 §	125A		TO18
89	2N2684A	60	28	55A	1.0m	20u	80	1.0u	25	1.2	.20	300n☑	20	10n☑	200	2 0 §	125A	50m†	TO18
90	2N2688	60 △	28	55A	2.0m	.20m	1 0	.10m△	125A	1 5	20					2 0 §	125A		TO18
91	TIC45	60 ☑	30	25A	5.0m	.20m	80	05m	125A	1 4	30	3 5u		6 8u		6 0	125A		M367
92	3L1060	60	35	25A	100u	5.0u$	55	100	25	1 2	2.0				1 0	10	125A		TO18
93	2N2680	60 △	35	55A	2.0m$	100u$	.90 $	100u	150A	1 2	.20				200	2.0 §	150A		TO18
94	2N2680A	60	35	55A	500u	20u	.70	100n	25	1 2	.20	300n☑	20	10u☑	200	2 0 §	150A	50m†	TO18
95	2N3002	60 △	35 △	55A	3.0m	02m	70	10m	150A	1 2	35					6 0 §*	150A	.10	TO18
96	2N3006	60 △	.35	55A	5 0m	20m	80	.10m	150A	1 2	35					6.0 §*	150A	.10	TO18
97	2N878	60 †	35	100C	1 0m	02m	60	.02m△	125C	1 5	20					20 *§	150C		TO18
98	2N886	60 †	35	100C	1 0m	02m	60	02m△	125C	1.5	.20					20 *§	150C		TO18
99	3F60△	60	35	100	10m	2 0m	1 5	.01m	25	1 5	.20	.40u	50	10u		5.0	150		TO18
100	5A60	60	35	100C	1 5m	5 0u	55	100n	25	1 2	.20				20	10	150C		M298
101	HR878A	60	35	100	5 0m	20m	80	.01m	25	1.5	1.0	10u	.50	50u		5.0	150		TO18
102	HR878B	60	35	100	3 0m	02m	60	.01m	25	1.5	1 0	.10u	50	.50u		5 0	150		TO18
103	2N4333	60	.39	25	1.0m	.01m	80			1 5	.80			10u		8 0	125A	02	TO52
104	2N5724	60	390m	90A	2.0m	20u	600m	200u	150A	1 5	780m			30u	100	8 0	150A	25m†	TO5
105	3L2060	60	40	35A	1 5m	5.0u	55	100n	25	1.5	1 0				20	10	150A		TO18
106	JAN2N1871A	60 ☑	400m	50A	5.0m	200u	800m	100u	125A	2.5	2 0					15	150A		TO9
107▼	GA300	60	400m	70C	5 0m	200u	750m	10u	70	1.5	2 0	55n	1.0	2 0u	20	100	70A		TO18
108▼	GA300A	60	400m	70C	5.0m	200u	750m	10u	70	1 5	2.0	55n	1.0	500n	20	100	70A		TO18
109	GA200	60	40	100C	5.0m	20m	75	100u	150	1 5	2 0				20	5 0	150A	.25	TO18
110	GA200A	60	40	100C	5 0m	20m	75	100u	150	1 5	2.0				20	5 0	150A	25	TO18

SYMBOLS AND CODES EXPLAINED IN INTERPRETER

6. SILICON CONTROLLED RECTIFIERS

IN ORDER OF (1) PEAK REV. VOLT., (2) MAX. CONT. CUR., (3) TEMPERATURE, (4) TYPE No.

LINE No	4 TYPE No.	1 PRV and VBO (V)	MAX. CONT. CURRENT 2 Idc (A)	3 at TEMP (°C)	MAX HOLD. CUR Ih @ 25°C (A)	MAX. GATE FIRING SPEC at 25°C Igf (A)	Vgf (V)	MAX SAT I Ir@PRV and Is@VBO (A)	at TEMP (°C)	MAX. FWD. VOLT DROP at 25°C Vf (V)	@ If (A)	SWITCHING TIME at 25°C Ton (s)	for If (A)	Toff (s)	MIN. dV/dt @ 25°C (V/us)	ABS. MAX. RATINGS 1Cy PK SURGE I@25°C (A)	MAX TEMP (°C)	MAX GATE POWER (W)	DWG. No.
1	AD100∅	60	.45	75A	2 0m	2 0u	60	00m	25A	1.5	1.0 †				50	15 §*	150A		TO5
2	AD107	60	45	75	2 0m	02m	60	2 0u	25	1.5	1.0	1 0u	1.0	20u	50	15	150		TO5
3	AD114	60	45	75	3 0m	20m	.80	2.0u	25	1 5	1 0	1.0u	1.0	20u	50	15	150		TO5
4	CD201	60	45	75	3 0m	400u	80	5.0u	25	1 4	1 0	1 0u	1.0	20u	50	15	150A		TO5
5	2N3028	60	50	100C	10m$	1 2m$	1.1 $	05m△†	150C	1 5	1 0	.20u	1 0	2 0u		5.0 §	150C		TO18
6	2N3031	60	50	100C	1.0m$	50m$	95 $	.05m△†	150C	1.5	1 0	10u	1.0	2.0u		5 0 §	150C		TO18
7	3C6060	60	50	100C	50m	10m	2 0		125C	2.0	.20						125A		TO9
8	3J60	60	50	100	10m	2.0m	1 5	10u	25	1.5	1.0	10u	1 0	.20u		5 0	150		TO18
9	4K60	60	50	100	5 0m	20m	1 0	.10u	25	1.5	1 0	.10u	1.0	.20u		30	150		TO46
10	4L60	60	.50	100	10m	02m	60	.10u	25	1.5	1.0	.08u	1 0	20u		5.0	150		TO46
11	HR3028	60	50	100	5 0m	.20m	.80	10u	25	1.5	1 0	.10u	1 0	.20u		30	150		TO18
12	HR3031	60	.50	100	2 0m	.02m	.60	.10u	25	1.5	1.0	.08u	1 0	.20u		5.0	150		TO18
13	ID101	60	500m	100	5 0m	200u	800m	50u	125	1.7	1.0	1.5u	1 0	10u		6.0	125		TO18
14	RTJ0206	60	510m	55C	10m	1.0m	1.0	1.0m	125	2.5	250m†				100	6 0	150S	10m†	TO92
15	RTJ0506	60	510m	55C	3 0m	20u	800m	20u	125	1.3	250m†				100	6 0	150S	10m†	TO92
16#	TAG06-60	60	600m	55C	3 0m	200u	800m	50u	125	1.3	600m	100n	800m	10u		6.0	150J	100m†	TO18
17	MCR103	60 △	800m△		5 0m	1.0	800m	100u	85C	1.7	1.0 †					6.0 *	85J	10m†	TO92
18	C103YY	60	800m△	25J	5 0m	200u	800m	1.0u	25C	1.5 †	1 0			15u	20 ∅	8.0	125J	10m†	M367a
19	3A3060	60	80	100	50m	10m	2 0	01m	25	2.5	50	.50u	.50	5.0u		5.0	150		TO9
20	3A3060A	60	.80	100	50m	10m	2 0	.01m	25	2 5	.50	.50u	.50	2.0u		5 0	150		TO9
21▼	HEPR1002-RT	60	800m	100J	5.0m∅§	200u§										6.0 §	125		TO92
22#	T0.8N0.6A00	60	.90	85C	20m	10m	3 0			1.2	1.0	2.0u	1 0	15u	15	19	125J	1 ∅	TO5
23	RTD0106	60	1.0	80C	5 0m	.20m	1.0	10m	100	1.5	1 0	20u	1.0		100	15	100C		TO5
24	RTD0206	60	1 0	80C	10m	1 0m	1 0	1.0m	125	2.5	1.0	.20u	1.0		100	15	125C		TO5
25	RTD0306	60	1 0	80C	10m	.20m	1 0	.50m	125	1.5	1 0	20u	1 0		100	15	125C		TO5
26	RTD0406	60	1 0	80C	5.0m	.10m	80	.10m	125	1.4	1 0	.20u	1.0		100	15	125C		TO5
27	RTD0506	60	1 0	80C	3.0m	.02m	80	.02m	125	1.4	1.0	.20u	1 0		100	15	125C		TO5
28	RTD0606	60	1.0	80C	2 0m	.02m	.70	02m	125	1 3	1.0	20u	1 0		100	15	125C		TO5
29	RTF0106	60	1 0	80C	5 0m	20m	1.0	10m	100	1.5	1.0	.20u	1.0		100	15	100C		TO5
30	RTF0206	60	1 0	80C	10m	1.0m	1 0	1.0m	125	2.5	1 0	.20u	1.0		100	15	100C		TO5
31	RTF0306	60	1 0	80C	10m	20m	1.0	.50m	125	1 5	1 0	.20u	1.0		100	15	125C		TO5
32	RTF0406	60	1.0	80C	5 0m	10m	80	10m	125	1 4	1 0	.20u	1.0		100	15	125C		TO5
33	RTF0506	60	1 0	80C	3.0m	.02m	80	02m	125	1.3	1.0	.20u	1 0		100	15	125C		TO5
34	RTF0606	60	1 0	80C	2 0m	.02m	.70	.02m	125	1.3	1.0	.20u	1 0		100	15	125C		TO5
35	2N1882	60	1 0	100C		2.0m	2 0	.20m	125C	2 0	1.0					20 *§	150C		TO9
36	3B60S	60	1.0	100		2.0m	2 0	.01m	25	2.5	2 0	1.2u	.50	10u		6.0	150		S135
37	2N1871	60	1 25	100C	5 0m	20m	.80	.10m△	125C	2 5	2.0					20 §*	150C		TO9
38	2N1871A	60	1.25	100C	5 0m	.20m	80	10m	125C	2.5	2.0					20 §*	150C		TO9
39	2N1877	60	1 25	100C	3 0m	.02m	60	.10m†△	125C	2.5	2 0					20 *§	150C		TO9
40	2N1877A	60	1 25	100	3.0m	20u	600m	5.0u	25	2.5	2.0	100n	500m	500n		5.0	150		TO9
41	FT1871	60 △	1 25	100C	5.0m	20m	.80	.10m△	125C	2 5 †	2.0				150 ∅	20 *§	150J		TO5
42	FT1882	60 △	1.25	100C	2 0m	2.0m	2 0	20m	125C	2 0 †	1.0				150 ∅	20 *§	150J		TO5
43	2N3556	60	1 6	100C	3.0m	02m	.70	10m	150	1 4	1 6					18	150J	.10	TO5
44	2N3560	60	1 6	100C	5 0m	20m	.80	10m	150	1.4	1.6					18	150J	10	TO5
45	BD101	60	2 0	100C	5 0m	.20m	80			1 8	2.0	.20u					150A		
46	3B3060	60	3 0	85C	10m	.20m	.80	01m	25	1.8	3 0				50	15	150C		S223
47	MCR106-2	60 △	4 0 △		5 0m	500u	1 0	200u	110J	2.0	4.0 †				10 ∅§	25 *§	110J	100m†	M386a
48	MCR407-2	60 △	4 0 △	93C	5.0m	500u	1.0	100u	100J	2.6	4.0				10 ∅§	20 △*	110J	500m∅	M386
49	MCR406-2	60 △	4 0 △	97C	3 0m	200u	800m	100u	110J	2.2	4 0				10 ∅§	30 △*	110J	500m∅	M386
50#	T3N0.6C00	60	4 0	100B	25m	20m	3.0			1.2	3 0	2.0u	3.0	17u	15	55	125J	2 ∅	S62
51	CM100	60	5.0	100C	3.0m	.20m	.80	.30m†	150C	2 5	5.0	1.0u∅	1 0	50u∅	100	30	150A		TO59
52	CM106	60	5 0	100C	3.0m	20m	.80	50m†	150C	3.0	5 0	.50u	1.0	50u	150 ∅	20	150A		TO59
53▼	GB300	60	6 0	70C	5.0m	200u	750m	10u	70	1.5	2 0	55n	1.0	2.0u	15	100	70A		TO59
54▼	GB300A	60	6 0	70C	5.0m	200u	750m	10u	70	1.5	2.0	55n	1.0	500n	15	100	70A		TO59
55	GB200	60 ∅	6.0	100	5 0m	200m	750m	100m§	150	1.5	2.0	50n∅	1.0	2 0u∅	20	30	150		TO59
56	GB200A	60 ∅	6.0	100	5 0m	200m	750m	100m§	150	1 5	2.0	50n∅	1.0	500n∅	20	30	150		TO59
57	C37F∅	60	25	37C	20m∅	80m	3.0	5.0m∅	105J	3 0 †	30	1 4u	5.0			175	105J	5.0 †	TO48
58	C40F∅	60	35	62C	10m∅	40m	2.5		125J	2.0 †	50			8.0u	200 §	150	125J	.50 †	TO48
59	C45F∅	60	55	89C	100m	70m	3.0	8 0m	125J	3.0 †	500	5.0u	50	30u§	200 §	1 2k	125J	.50 †	TO83
60	C46F∅	60	55	89C	100m	70m	3.0	8.0m	125J	3 0 †	500	5.0u	50	30u§	200 §	1.2k	125J	.50 †	TO49
61	NL555F	60	55	89C	300m	150m	2.5	10m	125J	3.5 †	500	8 0u	50	100u§	200 §	1 2k	125J	2 †	TO49
62	NL556F	60	55	89C	300m	150m	2.5	10m	125J	3.5 †	500	8.0u	50	100u§	200 §	1.2k	125J	2 †	TO83
63	2N1792	60	70 △	65C		130m$	3.0m$	6.5m∅	65C	1.8 †	70					1.0k*	125C	.50 †	TO83
64	C55F∅	60	110	60C	100m	70m	2.5	8 0m	125J	2.5 †	500	5.0u	5.0	15u§	200 §	1 2k	125J	50 †	TO49
65	C56F∅	60	110	60C	100m	70m	2.5	8 0m	125J	2.5 †	500	5.0u	5.0	15u§	200 §	1.2k	125J	.50 †	TO83
66#	CR30-104AA	75	38	70C	20m∅	80m	3.0	10m†	125C	2.5	100	20u	100	20u∅	20	660	125	5 0 ∅	TO49
67#	CR30-104BA	75	38	70C	20m∅	80m	3.0	10m†	125C	2.5	100	20u	100	15u∅	20	660	125	5 0 ∅	TO49
68#	CR30-104CA	75	38	70C	20m∅	80m	3.0	10m†	125C	2 5	100	20u	100	12u∅	20	660	125	5.0 ∅	TO49
69#	CR30-104DA	75	38	70C	20m∅	80m	3.0	10m†	125C	2.5	100	20u	100	8.0u∅	20	660	125	5.0 ∅	TO49
70#	CR50-104AA	75	66	75C	32m∅	60m	3.0	10m†	125C	1.7	150	5 5u	150	20u∅	20	760	125	5.0 ∅	TO49
71#	CR50-104BA	75	66	75C	32m∅	60m	3.0	10m†	125C	1.7	150	5 5u	150	15u∅	20	760	125	5.0 ∅	TO49
72#	CR50-104CA	75	66	75C	32m∅	60m	3.0	10m†	125C	1 7	150	5 5	150	12u∅	20	760	125	5.0 ∅	TO49
73#	CR50-104DA	75	66	75C	32m∅	60m	3.0	10m†	125C	1.7	150	5 5	150	8.0u∅	20	760	125	5.0 ∅	TO49
74#	CR50-104LA	75	66	75C	32m∅	60m	3.0	10m†	125C	1.7	150	5.5u	150	25u∅	20	760	125	5.0 ∅	TO49
75#	CR31-103A	75	80	55C	38m∅	60m	3 0	10m†	125C	1.7	100	3.7u	100	130u	20	700	135J	5.0 ∅	TO49
76#	CR31-104AA	75	80	55C	38m∅	60m	3 0	10m†	125C	1.7	100	5.7u	100	20u∅	20	700	135J	5.0 ∅	TO49
77#	CR31-104BA	75	80	55C	38m∅	60m	3 0	10m†	125C	1.7	100	5.7u	100	15u∅	20	700	135J	5.0 ∅	TO49
78#	CR31-104CA	75	80	55C	38m∅	60m	3.0	10m†	125C	1.7	100	5.7	100	12u∅	20	700	135J	5.0 ∅	TO49
79#	CR31-104DA	75	80	55C	38m∅	60m	3.0	10m†	125C	1 7	100	5 7	100	8.0u∅	20	700	135J	5.0 ∅	TO49
80#	CR70-101A	75 †	85	75C		100m	3.0	15m	25C	1.7	70				20	1.0k	125C	1.0	TO49
81#	CR70-101C	75	85	75C		100m	3.0	30m†	125C	1.7	210				20	1.0k	125	5.0	M376
82#	CR51-103A	75	105	55C	38m∅	60m	3 0	10m†	125C	1.6	150	3.4u	120	185u	20	760	135J	5.0	TO49
83#	CR100-101C	75 △	124	80C		100m	3 0	15m	25C	1.7	100				20	1.2k	125C	1.0	M376
84▼#	CR100-101D	75	125	80C	30m∅	100m	3.0	30m†	125C	1.7	300			100	20	1.5k	125	5.0	TO49
85#	CR153-103A	75	220	70C	35m∅	150m	3 5	30m†	125C	1.6	450				100	3.0k	125	5.0	M201
86#	CR152-103A	75	230	70C	35m∅	150m	3.5	30m†	125C	1.5	450				100	3.1k	125	5.0	M201
87#	CR151-103A	75	240	70C	35m∅	150m	3 5	30m†	125C	1.4	450				100	3.3k	125	5.0	M201
88#	CR253-103A	75	320	40C	35m∅	150m	3.5	30m†	125C	1.6	450				100	3.5k	125	5.0 ∅	M201
89#	CR252-103A	75	336	50C	35m∅	150m	3.5	30m†	125C	1.5	450				100	3.6k	125	5.0 ∅	M201
90#	CR7K103A45	75	435	65C	55m∅	150m	3 5	50m	125J	1.8	1.0k	3.5u	600	180u	100	6.0k	125J	5.0 ∅	M308b
91#	CR7K103A4	75	460	65C	55m∅	150m	3.5	50m	125J	1.7	1.0k	3.5u	600	180u	100	6.4k	125J	5 0 ∅	M308b
92#	CR7K103A35	75	480	65C	140m	150m	3.5	50m	125J	1.6	1.0k	3.5u	600	180u	100	6.9k	125J	5.0 ∅	M308b
93#	CS11D	80	.75	40C	12m	7.0m	.25	1.0m†		2.2 †	2.4					20	100C	.05	TO5
94#	40T1	80	65	75B	200m	200m	25	10m†		2.1 †	200					1.1k	125B	1.0	M308
95#	TAG06-90	90	600m	55C	3 0m	200u	800m	50u	125	1.3	600m	100n	800m	10u		6.0	150J	100m†	TO18
96	JAN2N2324	100			2.0m	.35m	1 0	.01m	25	2.2	4 0					15	125	.01	TO5
97	JAN2N2324A	100			2.0m	.35m	1 0	.01m	25	2.2	4.0					15	125	.01	TO5
98	JAN2N3029	100 †			5 0m	200u	800m	50n	25	1.5 †	1.0	200n	1 0	2.0u		8 0	150A		TO18
99	JAN2N3032	100 †			4 0m	20u	600m	50n	25	1.5 †	1.0	100n	1.0	2.0u		8.0	150A		TO18
100	2N4147	100			5 0m	1.0m	80									8.0 *§	110A	.2 ∅	C41d
101	C354A	100			500m	500m	4.0	18m	25C	3.0 †	500 †		50	7.0u§	200 §	1.2k	125J	2.0	M514
102	C355A	100			500m	500m	4 0	18m	25C	3.0 †	500 †		50	12u§	100 §	1.2k	125J	2.0	M514
103	C385A	100			500m	300m	3.0	10m	25C	2.8 †	1.5k†		250	15u§	200 §	3.5k	125J	2.0 †	M514
104	C506A	100			500m	220m	5.0	10m	25C				300	40u§	200 §	8.0k	125J	5.0 †	M464
105	C510A	100			500m	200m	5.0	10m	25C	2 2 †	500 §		300	12u§	200	4.0k	125J	2.0 †	M464
106#	10RCV10	100		125	50m	45m	2.9	6.5m	125	2.3			135	10u	100	135	125	50	TO48
107	2N5789	100	120m	75A	10m$	350u	1.2 $	200u	125A	1.2	240m					4.0	125A	10m†	TO106
108	B152	100	.20	75A	5.0m	.20m	.80			1.5	1 0	.20u					125A		TO46
109	C6204	100	.20	75A	5.0m	200u	80	100u	100	1.5	.20						150		M185a
110	RTH0110	100	.20	80C	5.0m	.20m	1.0	.10m	100	1.5	.20	.20u	.20		100	5.0	100C		M443

SYMBOLS AND CODES EXPLAINED IN INTERPRETER

6. SILICON CONTROLLED RECTIFIERS

IN ORDER OF (1) PEAK REV. VOLT., (2) MAX. CONT. CUR., (3) TEMPERATURE, (4) TYPE No.

LINE No.	4 TYPE No.	1 PRV and VBO (V)	MAX. CONT. CURRENT 2 Idc (A)	3 at TEMP (°C)	MAX. HOLD. CUR Ih @ 25°C (A)	MAX. GATE FIRING SPEC at 25°C Igf (A)	Vgf (V)	MAX SAT I Ir@PRV and Is@VBO (A)	at TEMP (°C)	MAX. FWD. VOLT. DROP at 25°C Vf (V)	@ If (A)	SWITCHING TIME at 25°C Ton (s)	for If (A)	Toff (s)	MIN. dV/dt @ 25°C (V/us)	ABS. MAX. RATINGS 1Cy PK SURGE I@25°C (A)	MAX TEMP (°C)	MAX GATE POWER (W)	DWG. No.
1	RTH0210	100	.20	80C	10m	1.0m	1 0	1 0m	125	2.5	20	.20u	.20		100	5.0	125C		M443
2	RTH0310	100	20	80C	10m	.20m	1 0	.50m	125	1.5	.20	.20u	.20		100	5.0	125C		M443
3	RTH0410	100	.20	80C	5 0m	.10m	80	.10m	125	1.5	20	.20u	.20		100	5.0	125C		M443
4	RTH0510	100	.20	80C	3 0m	02m	.80	02m	125	1.3	20	.20u	20		100	5 0	125C		M443
5	RTH0610	100	20	80C	2 0m	02m	70	.02m	125	1.2	20	.20u	20		100	5 0	125C		M443
6	2N5720	100	200m	90A	2 0m	20u	600m	100u	150A	1.4	400m			30u	100	5.0	150A	25mt	TO18
7	AA101	100	.25	75	2 0m	2 0u	.60	2 0u	25	1 5	1.0	1 0u	1 0	20u	50	15	150		TO18
8	AA108	100	25	75A	2 0m	02m	.60	2.0u	25A	1.5	1 0 †				50	15 §*	150A		TO18
9	AA115	100	25	75A	3 0m	20m	80	2.0u	25A	1.5	1.0 †				50	15 §*	150A		TO18
10	BA152	100	.25	75A	5 0m	.20m	80			1 5	1 0	20u					150A		TO18
11	CB202	100	25	75	3 0m	400u	80	5 0u			.50					5.0	150A		TO18
12	RTA0110	100	25	80A	5 0m	20m	1 0	10m	100	1.5	.25	20u	25		100	6 0	100A		TO46
13	RTB0110	100	25	80A	5 0m	200u	1 0	100u	100	1.5	25	200n	.25		100	6 0	100A		TO52
14	RTB0210	100	.25	80A	10m	200u	1 0	1.0m	125	2.5	25	200n	25		100	6.0	125A		TO52
15	RTB0310	100	25	80A	10m	.20m	1 0	.50m	125	1 5	25	.20u	.25		100	6 0	125A		TO52
16	RTB0410	100	25	80A	5 0m	10m	80	10m	125	1.5	25	20u	.25		100	6.0	125A		TO52
17	RTB0510	100	.25	80A	3 0m	.02m	80	02m	125	1 3	25	20u	.25		100	6 0	125A		TO52
18	RTB0610	100	.25	80A	2 0m	02m	70	02m	125	1 2	25	.20u	.25		100	6 0	125A		TO52
19	RTC0110	100	25	80A	5 0m	20m	1 0	10m	100	1.5	20	.20u	.25		100	6 0	100A		TO18
20	RTC0210	100	.25	80A	10m	1.0m	1 0	1.0m	125	2.5	25	.20u	25		100	6 0	125A		TO18
21	RTC0310	100	25	80A	10m	.20m	1 0	50m	125	1 5	.25	20u	25		100	6.0	125A		TO18
22	RTC0410	100	25	80A	5 0m	.10m	80	10m	125	1 5	.25	20u	25		100	6 0	125A		TO18
23	RTC0510	100	25	80A	3 0m	02m	80	02m	125	1 3	25	.20u	25		100	6 0	125A		TO18
24	RTC0610	100	.25	80A	2 0m	02m	70	.02m	125	1.2	.25	.20u	25		100	6 0	125A		TO18
25	2N5062	100	255m	102C	10m$	350u$	1 2 $	50u	125C	1 7	1 2					6 0	125C	10mt	TO92
26#	62T4⊘	100	26 △	25A	3.0m	.20m	80	05m	100J	1 1	20					5 0 *	100J		TO46
27	2N950	100 †	26	125C	1.0m	02m	1 0	.02m	125C	2.0	20					1 0 §	150C	.02	TO18
28	2N887A	100	275	25	1 0m	50u	60	20u	125	1 5	20	1 2u	20	3 2u		1 0	150A		TO18
29	2N2685	100 △	28	55A	1 0m	20u	80	20u△	125A	1 2	20				200	2 0 §	125A		TO18
30	2N2685A	100	28	55A	1.0m	20u	80	1 0u	25	1.2	20	300n⊘	20	10u⊘	200	2.0 §	125A	50mt	TO18
31	2N2689	100 △	28	55A	2 0m	20m	1 0	10m△	125A	1 5	20					2 0 §	125A		TO18
32▼#	2SF1111	100 ⊘	300m	25A		1 0m	800m	100u	100J	1 2	600m					10 △	100J	100m⊘	C123
33#	CR02AM2	100 ⊘	300m	25A		1 0m	800m	100u	100J	1.2	600m					10 △	100J	100m⊘	C123
34	TIC46	100 ⊘	30	25A	5 0m	20m	80	.05m	125A	1 4	30	3 5u		6 8u		6 0	125A		M367
35#	SF0R2B41	100	300m	30A	5 0m	200u	800m	100u	100J	2 0	2 0					6.0	100J	100m	C117
36	3L1100	100	35	25A	100u	5 0u	.55	100n	25	1 2	2 0				1 0	10	125A		TO18
37	2N2681	100 △	350m	55A	2.0m$	100u$	900m$	100u△	150A	1 2	200m				200	2 0 §	150A		TO18
38	2N2681A	100	35	55A	500u	20u	70	100n	25	1 2	20	300n⊘	20	10u⊘	200	2 0 §	150A	50mt	TO18
39	2N3003	100	35 △	55A	3 0m	02m	70	.10m	150A	1 2	35					6 0 §*	150A	10	TO18
40	2N3007	100 △	35	55A	5 0m	.20m	80	10m	150A	1 2	35					6 0 §*	150A	10	TO18
41	2N879	100 †	35	100C	5 0m	20m	80	10m△	125C	1.5	.20					20 *§	150C		TO18
42	2N887	100 †	35	100C	1 0m	02m	60	.02m△	125C	1.5	20					20 *§	150C		TO18
43	3F100△	100	35	100	10m	2 0m	1 5	.01m	25	1 5	20	40u	50	10u		5 0	150		TO18
44	5A100	100	35	100C	1 5m	5 0u	55	100n	25	1 2	20				20	10	150C		M298
45	HR879A	100	.35	100	5 0m	20m	80	01m	25	1 5	1 0	10u	50	50u		5 0	150		TO18
46	HR879B	100	35	100	3 0m	02m	.60	.01m	25	1 5	1 0	.10u	.50	.50u		5 0	150		TO18
47#	2SF102	100 ⊘	.38	25A		50m	1 0	10m	100J	2 5	4 0					15	100J	01	TO5
48#	2SF657	100 ⊘	38	25A	4 0m⊘	1 0m	80	10m	100J	2 5	4 0					8 0	100J	.01	
49	2N4334	100	39	25	1 0m	01m	80			1.5	.80			10u		8 0	125A	02	TO52
50	2N5725	100	390m	90A	2 0m	20u	600m	200u	150A	1 5	780m			30u	100	8 0	150A	25mt	TO5
51#	2SF522	100 ⊘	40	25A	2 0m⊘	3.0m	1 0	.40m⊘	125J	1 2	1 0					20	125J	1 ⊘	TO5
52♦#	CR05A2	100 ⊘	400m	25A		3 0m	1 0	400u	125J	1 2	1.0					20 △	125J	100m⊘	TO5
53♦	C107A2	100	400m	32A$	3 0m	500u	800m	100u	110	2.5	4.0	1 2u	1 0	40u	8.0 ⊘	15	110J	500m	M626
54♦	C107A4	100	400m	32A$	3 0m	500u	800m	100u	110	2.5	4.0	1.2u	1.0	40u	8.0 ⊘	15	110J	500m	M628
55	3L2100	100	40	35A	1 5m	5 0u	55	100n	25	1 5	1 0				20	10	150A		TO18
56	JAN2N1872A	100 ⊘	400m	50A	5 0m	200u	800m	100u	125A	2 5	2 0					15	150A		TO9
57▼	GA301	100	400m	70C	5 0m	200u	750m	10u	70	1 5	2.0	50n	1 0	2 0u	20	100	70A		TO18
58▼	GA301A	100	400m	70C	5 0m	200u	750m	10u	70	1 5	2 0	50n	1 0	500n	20	100	70A		TO18
59	GA201	100	40	100C	5 0m	.20m	75	100u	150	1.5	2 0				20	5 0	150A	25	TO18
60	GA201A	100	40	100C	5 0m	.20m	75	100u	150	1 5	2.0				20	5 0	150A	25	TO18
61	AD101	100	45	75A	2 0m	2u	60	2.0u	25A	1.5	1 0 †				50	15 §*	150A		TO5
62	AD108	100	45	75	2 0m	.02m	60	2.0u	25	1.5	1 0	1 0u	1 0	20u	50	15	150		TO5
63	AD115	100	45	75	3 0m	20m	80	2 0u	25	1.5	1 0	1.0u	1 0	20u	50	15	150		TO5
64	CD202	100	45	75	3 0m	400u	80	5 0u	25	1 4	1 0	1 0u	1 0	20u	50	15	150A		TO5
65▼	S1001K	100	500m	80C	10m	10m	1 5	1 0m	100C	1 6	3 0	1 5u	2.0	25u§	30 §	50 §	125A	500mt	M506
66	2N3029	100	50	100C	10m$	1 2m$	1 1 $	05m△†	150C	1 5	1 0	20u	1 0	2 0u		5 0 §	150C		TO18
67	2N3032	100	50	100C	4 0m	20u	60	100n	25C	1 5	1 0	100n	1 0	2.0u		5 0 §	150C		L4
68	3C6100	100	50	100C	50m	10m	2 0		125C	2 0	20						125A		TO9
69	3J100	100	50	100	10m	2 0m	1 5	10u	25	1 5	1 0	10u	1 0	20u		5 0	150		TO18
70	4K100	100	50	100	5 0m	20m	1.0	10u	25	1 5	1 0	10u	1 0	.20u		30	150		TO46
71	4L100	100	50	100	10m	.02m	60	10u	25	1.5	1 0	08u	1 0	.20u		5 0	150		TO46
72	HR3029	100	50	100	5 0m	20m	80	10u	25	1 5	1.0	10u	1 0	20u		30	150		TO18
73	HR3032	100	50	100	2 0m	.02m	60	10u	25	1 5	1 0	08u	1 0	.20u		5 0	150		TO18
74	ID102	100	500m	100	5 0m	200u	800m	50u	125	1.7	1.0	1 5u	1 0	10u		6 0	125		TO18
75	RTJ0210	100	510m	55C	10m	1 0m	1 0	1 0m	125	2.5	250mt				100	6 0	150S	10mt	TO92
76	RTJ0510	100	510m	55C	3 0m	20u	800m	20u	125	1.3	250mt				100	6 0	150S	10mt	TO92
77#	TD1001J	100	600m	25A	40m⊘	20m	3 0	1 0m	125J	2 0	1.0	1 5u§	500m	15u§	50 ⊘§	12		60m	C16e
78#	TDH1	100	600m	25A	5 0m	300u	3 0	1 0m	125J	2 0	1 0	1.5u§	500m	60u§	10 ⊘§	12		900u	C16e
79#	TDRA1	100	600m	25A	20m⊘	10m	3 0	1 0m	125J	2.0	1.0	1 5u§	500m	20u§	50 ⊘§	12		30m	C16e
80	2N1931	100	75	55A$	80m$	30m$	2 0 $	1 0m⊘	125A	1 4 $	.75					30 §	125A	10	M77
81	MCR104	100 △	800m△		5 0m	1 0	800m	100u	85C	1 7	1 0 †					6 0 *	85J	10mt	TO92
82♦	C107A1	100	800m	20A$	3 0m	500u	800m	100u	110	2.5	4.0	1 2u	1.0	40u	8 0 ⊘	15	110J	500m	M627
83♦	C107A3	100	800m	20A$	3 0m	500u	800m	100u	110	2.5	4.0	1.2u	1 0	40u	8.0 ⊘	15	110J	500m	M625
84	C103A	100	800m△	25J	5.0m	200u	800m	1.0u	25C	1.5 †	1.0			15u	20 ⊘	8.0	125J	10mt	M367a
85	3A3100	100	80	100	50m	10m	2 0	.01m	25	2.5	.50	50u	.50	5 0u		5 0	150		TO9
86	3A3100A	100	80	100	50m	10m	2 0	.01m	25	2.5	50	50u	50	2 0u		5 0	150		TO9
87▼	HEPR1003-RT	100	800m	100J	5 0m⊘§	200u§										6.0 §	125		TO92
88#	T0 8N1A00	100	90	85C	20m	10m	3 0			1 2	1 0	2 0u	1 0	15u	15	19	125J	1 ⊘	TO5
89	2N4097	100 △	1 0	25C	2 0m	.20m	80	02m△	125C	1 6	50	1 5u	20	15u	75	4 0 *	125J	1 †	TO46
90	2N4109	100 △	1 0	25C	2 0m	.20m	80	02m△	125C	1 6	50	1.5u	.20	15u	75	4 0 *	125C	.1 †	TO18
91#	TD1001	100	1.0	25C	1 0m⊘	2 5m	5 0	1 0m	100J	2 0	.75	1 5u	.60	20u		12	100A	01	TO5
92#	TD1001S	100	1 0	25C	30m⊘	30m	5 0	1 0m	100J	2 0	75	1 5u	60	40u		12	100A	.01	TO5
93#	TDR1	100	1 0	25A	30m⊘	20m	3 0	1 0m	125J	2 0	1.0	1 5u§	500m	20u§	50 ⊘§	12		60m	C16e
94#	T 75F100	100	1 0	60	20m	25m	2.5	1 0m	90J	2 0	1 0	2.0u	40	20u	20	15	45A	.20	TO5
95#	TAG1-100	100	1 0	70C	25m	10m	2 0	1 0m	105	2 0	2 0					15	105J	30mt	TO5
96#	TAG2-100	100	1.0	70C	5 0m	1 0m	2 0	1 0m	105	2.0	2.0					15	105	30mt	TO5
97	2N1596	100	1 0	80C		10m	3 0	1 0m	125C	2 0 §	1 0					15 §	125C		TO5
98	B03402	100	1 0	80C	10m	10m	1 5	1.5m	100C	1.6		1 5u	2.0	25u	30 §	50 §		500mt	M506
99	B04302	100	1 0	80C	10m	10m	1 5	1 5m	100C	1.6		1.5u	2 0	25u	30 §	50 §		500mt	C16aa
100	RTD0110	100	1 0	80C	5.0m	.20m	1 0	10m	100	1.5	1.0	.20u	1 0		100	15	100C		TO5
101	RTD0210	100	1 0	80C	10m	1.0m	1 0	1 0m	125	2.5	1 0	.20u	1 0		100	15	125C		TO5
102	RTD0310	100	1 0	80C	10m	.20m	1 0	50m	125	1 5	1.0	.20u	1 0		100	15	125C		TO5
103	RTD0410	100	1 0	80C	5 0m	10m	80	10m	125	1 4	1 0	20u	1 0		100	15	125C		TO5
104	RTD0510	100	1 0	80C	3 0m	.02m	80	02m	125	1 4	1 0	.20u	1.0		100	15	125C		TO5
105	RTD0610	100	1.0	80C	2 0m	.02m	.70	02m	125	1.3	1 0	.20u	1.0		100	15	125C		TO5
106	RTF0110	100	1 0	80C	5 0m	.20m	1 0	10m	100	1 5	1 0	.20u	1.0		100	15	100C		TO5
107	RTF0210	100	1 0	80C	10m	1 0m	1 0	1 0m	125	2 5	1 0	.20u	1 0		100	15	100C		TO5
108	RTF0310	100	1 0	80C	10m	20m	1 0	.50m	125	1 5	1 0	.20u	1 0		100	15	125C		TO5
109	RTF0410	100	1 0	80C	5 0m	10m	.80	.10m	125	1 4	1 0	.20u	1 0		100	15	125C		TO5
110	RTF0510	100	1 0	80C	3 0m	.02m	80	.02m	125	1.3	1 0	20u	1.0		100	15	125C		TO5

SYMBOLS AND CODES EXPLAINED IN INTERPRETER

6. SILICON CONTROLLED RECTIFIERS

IN ORDER OF (1) PEAK REV. VOLT., (2) MAX. CONT. CUR., (3) TEMPERATURE, (4) TYPE No.

LINE No.	4 TYPE No.	1 PRV and VBO (V)	MAX. CONT CURRENT 2 Idc (A)	3 at TEMP (°C)	MAX. HOLD CUR Ih @ 25°C (A)	MAX. GATE FIRING SPEC at 25°C Igf (A)	Vgf (V)	MAX SAT I Ir@PRV and Is@VBO (A)	at TEMP (°C)	MAX. FWD. VOLT. DROP at 25°C Vf (V)	@ If (A)	SWITCHING TIME at 25°C Ton (s)	for If (A)	Toff (s)	MIN. dV/dt @ 25°C (V/us)	ABS. MAX. RATINGS 1Cy PK SURGE I@25°C (A)	MAX TEMP (°C)	MAX GATE POWER (W)	DWG. No.
1	RTF0610	100	1 0	80C	2.0m	02m	.70	02m	125	1.3	1.0	20u	1.0		100	15	125C		TO5
2▼	S1001J	100	1 0	80C	10m	10m	1.5	1.0m	100C	1.6	7.0	1.5u	2.0	25u§	30 §	50 §	125A	500m†	M506
3▼	S1001M	100	1 0	80C	10m	10m	1.5	1.0m	100C	1 6	7 0	1 5u	2 0	25u§	30 §	50 §	125A	500m†	C16aa
4	2N4214	100	1.0	85	7.0m	300u	1 0	200u	125	2 0 †	3 1					15 §*	125A	.10 Ø	TO5
5#	T1N100	100	1 0	85C	25m	10m	2.0	1.0m	125J	1 9	2 0	5 0u	1.0	25u	10 §	15	125J	400m	TO5
6	2N1883	100	1 0	100C		2.0m	2 0	.20m	125C	2.0	1.0					20 *§	150C		TO9
7	3B100S	100	1 0	100		2 0m	2 0	.01m	25	2 5	2 0	1.2u	.50	10u		6.0	150		S135
8	C9A	100	1 1	18A	20m	8 0m	2 0	2 0mØ	125J	1.1 Ø	1.1			12u		30 §	125J	5.0	M77
9	SCR11A	100 ☑	1 1	25C	20m	15m	2.0	2 0mΔ	125C	1.2 Δ	1 0	1.0u§	30	20u§		60 §	125J	5.0	A130
10	SCRF11A	100 ☑	1.1	25C	50m	15m	2 0	2.0mΔ	125C	1.2 Δ	1 0	2.0u§	1 0	6 0u§		60 §	125J	5.0	A130
11#	BStB0106	100	1.2	45A		15m	3 0		115J						100 §	34	115J		M477
12	2N1872	100	1.25	100C	5.0m	20m	.80	.10mΔ	125C	2.5	2.0					20 §*	150C		TO9
13	2N1872A	100	1.25	100C	5.0m	20m	.80	.10m	125C	2 5	2 0					20 §*	150C		TO9
14	2N1878	100	1.25	100C	3 0m	02m	.60	.10m†Δ	125C	2 5	2 0					20 *§	150C		TO9
15	2N1878A	100	1.25	100	3.0m	20u	.60	5.0u	25	2.5	2.0	100n	.50	500n		5.0	150		TO9
16	FT1872	100 Δ	1.25	100C	5.0m	.20m	.80	.10mΔ	125C	2 5 †	2 0				150 Ø	20 *§	150J		TO5
17	FT1883	100 Δ	1.25	100C	2.0m	2 0m	2 0	2 0m	125C	2 0 †	1 0				150 Ø	20 *§	150J		TO5
18	2N2011	100 †	1.3	80C	5.0m§	.20m	1 0	.10m†	125C	1.2	1.0					15 §	150C	.05	TO5
19	FT2011	100 Δ	1 3	80C	5.0m§	20m	1 0	10m	125C	2 0	1 0					15 §*	150J	.05	TO5
20#	GC01001	100	1.4	25A	50mØ	25m	3 0	1 0m		2 0	1 0					3.0	100C	5.0	TO5
21▼	40810	100	1 5	75C	20m	15m	2.0			3.5	30	2 0u☑	4 5		10 §	40	100C	10	C16ac
22#	12T4	100	1.6 Δ	25C	1 5mØ	10m	3.0	.25mΔ	25J	2.0	1.0			20u		15	100J		TO5
23#	CR1-101C	100 †	1 6	25C	1.9m	10m	3 0	1.0m	100J	2.0	1.0	1 4u	1.0			15	100A	10	TO5
24	2N2346	100	1.6	55C	1 0m$	75u$	1 0 $	100uΔ	100C	1.5 §	1 6					15 §	100C	10m	TO5
25	TI145A1	100	1.6	60C	25m	25m	3 5			2 0	1 0					30	105C	.30	TO5
26#	SF1B11A	100	1.6	62C	10m	1.0m	800m	100u	100J	3.4	10					17	150	100m	TO5
27	MCR914-3	100 ☑	1.6	65C		8 0m	2 0	1.0mΔ	125J	1 4 Δ	1 0	.70u	1.0	10u		15 Δ	125J	1.0	TO5
28#	BTX30-100	100	1.6	70C	25m	10m	2 0	1.0m	125	1.9	2 0					15	125J	30m†	TO5
29♦	ID201	100	1.6	70C	3 0m	200u	800m	100u	110	2.2	4 0	1 0	1 0	40u	20 Ø	15	110A		TO39
30♦	ID602	100	1.6	70C	3.0m	200u	800m	100u	110	2.5	4.0	1.0	1.0	40u	20 Ø	15	110A		TO39
31	2N2324	100	1 6	85C	3 0m$	.35m$	1 0 $	.10mΔ	125C	1 5 §	1 6					15 §	125C	.01	TO5
32	2N2324A	100	1 6	85C	3.0m$	75u$	.90 $	100u	125C	1.5 §	1 6					15 §	125C	10m	TO5
33	C6213	100	1.6	85C	2.0m	200u	.80	100u	125	1.5	1.6						150		M185b
34	C6A	100 Ø	1 6 Δ	87C	5 0m	1 0m	80	01m	25J	1.4 Δ	1.0	1 4u	1.0	40u		10 Δ	125J	.10	TO5
35#	SF1B11	100	1.6	89C	10m	1 0m	800m	100m	125C	3.4	10					17	125	100m	
36	2N3557	100	1.6	100C	3 0m	.02m	70	10m	150	1.4	1 6					18	150J	.10	TO5
37	2N3561	100	1.6	100C	5 0m	20m	80	10m	150	1.4	1.6					18	150J	.10	TO5
38	MCR1906-3	100 Δ	1.6	100J	5.0m	1 0m	1 0	500u	100J	1 7	1 0					15	100J	10m†	TO5
39	C511A	100 Ø	1 6	104C	2.0m	.20m	.80	.01m	25J	2.2 Δ	4 0					15 §	125J	10	M181a
40	C611A	100 Ø	1 6 Δ	104C	5 0m	1.0m	.80	01m	25J	1 4 Δ	1 0	1 4u	1 0	40u		10 Δ	125J	10	M181a
41	2N1596A	100	1 6	110C	5 0m	2 0m	3 0	1 0m	125J	2 0	1.0					15 *	150J	.10	TO5
42	SCRFL10	100 ☑	1 7	80C	50m	15m	2.0	2.0m	125C	1.2 Δ	1.0	2.0u§	1 0	12u§		60 §	125C	5 0	A130
43	BO1409	100	1 9	80C	10m	10m	1.5	1.5m	100C	1.6		1.5u	2 0	25u	30 §	50 §		500m†	M507
44	BO4309	100	1 9	80C	10m	10m	1 5	1.5m	100C	1 6		1 5u	2 0	25u	30 §	50 §		500m†	C16aa
45▼	S1003L	100	1.9	80C	10m	10m	1 5	1.0m	100C	1.6	12	1.5u	2.0	25u§	30 §	50 §	125A	500m†	M507
46▼	S1003M	100	1 9	80C	10m	10m	1 5	1 0m	100C	1.6	12	1.5u	2.0	25u§	30 §	50 §	125A	500m†	C16aa
47♦#	CR2AM2	100 Ø	2 0	60C		3 0m	1 0	100u	100J	1.8	4 0					20 Δ	100J	500mØ	M488a
48#	SM2B41	100	2.0	70C	50m	75m	3.0	1.0m	110J	2.6	6.0					12	110J	3.0	M488
49#	SF1R3B41	100	2 0	80C	10m	200u	800m	200u	110J	2 0	10					20	110J	100m	M488
50	BD102	100	2 0	100C	5 0m	.20m	.80			1 8	2.0	.20u					150A		
51	MCR846-3	100	2 0	105J	25mØ	50m	1.5	2.0m	105J	1.6	2.0	.50u	2.0	4.0u	50 §	30	105J	5 Ø	S258
52	2N3273	100 Ø	2 2	85C	2 0m	200u	80	200uΔ	150	1.8	2.2	3 0u☑	5.0	22u☑	1.0k§	15 §	150C	10	TO5
53♦	C106A2	100	2.4	20C$	3 0m	200u	800m	100u	110	2 2	4.0	1.2	1 0	40u	8.0 Ø	20	110	500m	M626
54♦	C106A4	100	2 4	20C$	3 0m	200u	800m	100u	110	2.2	4 0	1.2	1.0	40u	8.0 Ø	20	110	500m	M628
55#	TM1004	100	2 5	25A	30mØ	25m	3.0	3 0m	110J	2.0	8.0	2.0u§	1 0	60u§	50 Ø§	50		75m	S141d
56	UCR10L	100 Δ	2 5	25A	50m	50m				1 2	3.0			15u	250	60	125J	3.0 ☑	A253
57	NCM100C	100	3 0	§	15mØ	30m	1 5	2 0u	100J	1.5	5 0	1.0u☑		10u☑	25 §		100	20 Ø	S17
58#	2SF529	100	3 0	40C	5 0mØ	20m	2.0	1.5mØ	125J	1.2	3 0					50	125J	1 Ø	C63aΔ
59	RTR0110	100	3 0	65C	100m	50m	3 0	2.0m	100	2.5	10	20u	3.0		100	40	100C		TO66
60	C15A	100	3.0	75C	30m	25m	2.5	9.0m	105J	1.8 †	15					60	105J	.50	TO64
61	NCR100B	100	3 0	80B$		25m	2 5	1 0m	125C	2.0 §	1.0					25 §	100A		S17
62	RTN0110	100	3 0	80C	100m	50m	3.0	2 0m	100	2.5	10	.20u	3 0		100	40	100C		TO64
63	RTS0110	100	3 0	80C	100m	50m	3.0	2.0m	100	2.5	10	.20u	3.0		100	40	100C		M94
64	3B3100	100	3.0	85C	10m	20m	80	.01m	25	1.8	3.0				50	15	150C		S223
65#	CR3D2	100 Ø	3.0	95C	5.0mØ	20m	2.0	1.5m	125J	1.2	3.0					50 Δ	125J	1.0 Ø	C63a
66	BO1416	100	3.8	80C	20m	15m	1 5	1.5m	100C	1.6		1.5u	2.0	25u	30 §	100 §		500m†	M507
67	BO5416	100	3 8	80C	20m	15m	1.5	1 5m	100C	1.6		1.5u	2 0	25u	30 §	100 §		500m†	S307
68	B18033	100	3 8	80C	20m	15m	1.5	1.5m	100C	1.6		1.5u	2.0	25u	30 §	100 §		500m†	
69	B19033	100	3 8	80C	20m	15m	1.5	1.5m	100C	1.6		1.5u	2 0	25u	30 §	100 §		500m†	
70▼	S1006B	100	3 8	80C	20m	15m	1 5	1 0m	100C	1.6	24	1.5u	2.0	25u§	30 §	100 §	125A	500m†	S307
71▼	S1006G	100	3 8	80C	20m	15m	1 5	1 0m	100C	1.6	24	1 5u	2 0	25u§	30 §	100 §	125A	500m†	M605
72▼	S1006H	100	3.8	80C	20m	15m	1 5	1.0m	100C	1.6	24	1.5u	2.0	25u§	30 §	100 §	125A	500m†	S361
73▼	S1006L	100	3 8	80C	20m	15m	1 5	1.0m	100C	1.6	24	1.5u	2 0	25u§	30 §	100 §	125A	500m†	M507
74♦	C106A	100	4.0		3 0m	200u	800m	10u	25	2.2	4 0 †	1.2	1.0	100u	8.0 Ø	20	110A	200m†	
75	MCR106-3	100 Δ	4.0 Δ		5 0m	500u	1.0	200u	110J	2.0	4 0 †				10 Ø§	25 *§	110J	100m†	M386a
76♦	C106A1	100	4.0	20C	3.0m	200u	800m	100u	110	2.2	4 0	1 2	1.0	40u	8.0 Ø	20	110	500m	M627
77♦	C106A3	100	4.0	20C	3 0m	200u	800m	100u	110	2.2	4.0	1.2	1 0	40u	8 0 Ø	20	110	500m	M625
78♦	IR106A1	100 Ø	4 0	20C	3 0m	200u	800m	100u	110J	2.8 †	8.0	1.2u	1 0	40u	8.0 ØΔ	25 Δ	110J	100m†	Y202a
79♦	IR106A2	100 Ø	4.0	20C	3 0m	200u	800m	100u	110J	2.8 †	8 0	1 2u	1 0	40u	8 0 ØΔ	25 Δ	110J	100m†	M626a
80♦	IR106A3	100 Ø	4 0	20C	3 0m	200u	800m	100u	110J	2.8 †	8.0	1.2u	1.0	40u	8.0 ØΔ	25 Δ	110J	100m†	M625
81♦	IR106A4	100 Ø	4.0	20C	3 0m	200u	800m	100u	110J	2.8 †	8 0	1 2u	1.0	40u	8.0 ØΔ	25 Δ	110J	100m†	M628a
82▼	IR106A41	100 Ø	4.0	20C	3.0m	200u	800m	100u	110J	2.8 †	8.0	1.2u	1 0	40u	8.0 ØΔ	25 Δ	110J	100m†	M629
83	TC106A1	100	4 0 Δ	75C	3.0m	200u	800m	10u	25	2.2	4 0 †	1.0u	1.0	100u	100	20	150S	100m†	M627
84	TC106A2	100	4 0 Δ	75C	3.0m	200u	800m	10u	25	2.2	4 0 †	1.0u	1.0	100u	100	20	150S	100m†	M626
85	TC106A3	100	4 0 Δ	75C	3 0m	200u	800m	10u	25	2.2	4 0 †	1 0u	1 0	100u	100	20	150S	100m†	M625
86	TC106A4	100	4 0	75C	3 0m	200u	800m	10u	25	2 2	4.0 †	1 0u	1.0	100u	100	20	150S	100m†	M628
87	2N1601	100	4.0	80C		10m	3.0	1.0m	125C	2 0 §	1.0					25 §	125C		TO64
88	SCR31A	100 ☑	4 0	80C	25m	15m	2.0	1.0mΔ	125C	2.0 Δ	3.0	1.0u☑	60			60 §	125J	5 0	S62
89	SCRF31A	100 ☑	4 0	80C	50m	15m	2.0	1.0mΔ	125C	2.0 Δ	3.0	2 0u§	1.0	6 0u§		60 §	125J	5.0	S62
90	MCR407-3	100 Δ	4.0 Δ	93C	5.0m	500u	1 0	100u	100J	2.6	4.0				10 Ø§	20 Δ*	110J	500mØ	M386
91	MCR406-3	100 Δ	4 0 Δ	97C	3 0m	200u	800m	100u	110J	2 2	4.0				10 Ø§	30 Δ*	110J	500mØ	M386
92#	T3N1C00	100	4.0	100B	25m	20m	3 0			1 2	3.0	2.0u	3.0	17u	15	55	125J	2 Ø	S62
93	3TCRC	100 ☑	4.2	60B	50m	50m	3.0	4.0mØ	125J	1.4 Ø	3.0 §	2 0u	3.0	30u		40 *	150S	5 Ø	S56
94#	TM1007	100	4 5	25A	40mØ	40m	3 0	3 0m	110J	2 0	15	2 0u§	6.0	50u§	50 Ø§	80		120m	S141d
95#	TM1007S	100	4 5	25A	50mØ	40m	3 0	3 0m	110J	2.5	15	2.0u		15u	100 §	80		120m	S141d
96#	TRA71	100	4.5	25A	40mØ	40m	3.0	3.0m	110J	2.0	15	2.0u§	6.0	40u§	50 Ø§	80		120m	M94g
97#	TRA71D	100	4.5	25A	40mØ	40m	3 0	3 0m	110J	2.0	15	2.0u§	6 0	40u§	50 Ø§	80		120m	S131
98	2N1772	100	4 7 Δ	60C		30m$	2.0 $	9 0mØ	125C	1.9 †	4.7					60 *	125C	50	TO64
99#	BStB0206	100	4.7	63		15m	3 0		115J						100 §	34	115J		M478
100	3RC10	100 ☑	4 7 Δ	92C	5 0mØ	15m	2 0	4 5m	105C	2 0	9.4 †					30 Δ	105J	50 †	TO64
101	2N1772A	100	4 7 Δ	105C	80m$☑	30m$	2 0 $	9 0mØ	150C	1 9 †	4.7					60 *	150C	50	TO64
102	3RC10A	100 ☑	4 7 Δ	105C	5.0mØ	15m	3 0	9.0m	125C	2.0	9.4 †					40 Δ	125J	50 †	TO64
103	RTR0210	100	5 0	65C	100m	50m	3.0	2 0m	100	2 5	15	.20u	5 0		100	60	100C		TO66
104	RTR0310	100	5.0	65C	25m	15m	1 5	1.0m	100	2 0	15	20u	5.0		100	60	100C		TO66
105	RTR0410	100	5 0	65C	100m	50m	3 0	2.0m	125	2 5	15	20u	5 0		100	60	125C		TO66
106	2N4169	100	5 0	70C	60m$	50m$	2 5 $	2.0m	100C							100 *	100C	5.0 Ø	S262
107	2N4177	100	5 0	70C	60m$	50m$	2 5 $	2 0m	100C							100 *	100C	5 0 Ø	S263
108#	TAG3-100	100	5.0	70	25m	15m	2 0	1 5m	105	2 1	10					60	105	5.0	TO66
109#	2SF262	100	5 0	73C	10mØ	30m	2 5	3.0mØ	100J	1 3	5.0					90	100J	5 0 Ø	S141b
110#	2SF262A	100	5.0	73C	10mØ	30m	2.5	3.0mØ	100J	1.3	5.0		5.0	15u☑	100 Δ	90	100J	5 0 Ø	S141b

SYMBOLS AND CODES EXPLAINED IN INTERPRETER

6. SILICON CONTROLLED RECTIFIERS

IN ORDER OF (1) PEAK REV. VOLT., (2) MAX. CONT. CUR., (3) TEMPERATURE, (4) TYPE No.

LINE No.	4 TYPE No.	1 PRV and VBO (V)	MAX. CONT. CURRENT 2 Idc (A)	3 at TEMP (°C)	MAX. HOLD. CUR Ih @ 25°C (A)	MAX. GATE FIRING SPEC at 25°C Igf (A)	Vgf (V)	MAX SAT I Ir@PRV and Is@VBO (A)	at TEMP (°C)	MAX. FWD. VOLT. DROP at 25°C Vf (V)	@ If (A)	SWITCHING TIME at 25°C Ton (s)	for If (A)	Toff (s)	MIN. dV/dt @ 25°C (V/us)	ABS. MAX. RATINGS 1Cy PK SURGE I@25°C (A)	MAX TEMP (°C)	MAX GATE POWER (W)	DWG. No.
1	2N4153	100	5.0	75C	60m$	50m$	2.5 $	2 0m	100C							100 *	100C	5.0 Ø	C84
2	2N4161	100	5 0	75C	60m$	50m$	2.5 $	2 0m	100C							100 *	100C	5 0 Ø	C85
3	2N4185	100	5 0	75C	60m$	50m$	2 5 $	2.0m	100C							100 *	100C	5.0 Ø	S264
4	2N4193	100	5 0	75C	60m$	50m$	2.5 $	2 0m	100C							100 *	100C	5.0 Ø	M363
5#	CR8-10	100	5 0	75C	30m	30m	2.0	2 0m	100J	2 0	15	1 0u	5.0	30u		120	100	5.0	M408
6#	BStC0106	100	5 0	80C	100m	40m	2.0	2 0m	125J	1 8	15				50 §	70	125J		S343
7#	BStC0506	100	5 0	80C	100m	40m	2 0	2.0m	125J	1 8	15				50 §	70	125J		TO66
8	RTN0210	100	5.0	80C	100m	50m	3 0	2.0m	100	2.5	15	200n	5.0		100	60	100C		TO64
9	RTN0310	100	5 0	80C	25m	15m	1.5	1 0m	100	1.8	15	200n	5.0		100	60	100C		TO64
10	RTN0410	100	5 0	80C	100m	50m	3.0	2 0m	125	2.5	15	200n	5.0		100	60	125C		TO64
11	RTN0510	100	5 0	80C	25m	15m	1.5	1 0m	125	1 8	15	200n	5 0		100	60	125C		TO64
12	RTN0610	100	5 0	80C	25m	15m	1.5	1.0m	150	1 8	15	200n	5.0		100	60	150C		TO64
13	RTR0510	100	5 0	80C	25m	15m	1.5	1.0m	125	2.0	15	200n	5 0		100	60	125C		TO66
14	RTS0210	100	5 0	80C	100m	50m	3 0	2 0m	100	2 5	15	200n	5 0		100	60	100C		M94
15	RTS0310	100	5 0	80C	25m	15m	1.5	1.0m	100	1 8	15	200n	5 0		100	60	100C		M94
16	RTS0410	100	5 0	80C	100m	50m	3.0	2.0m	125	2 5	15	200n	5 0		100	60	125C		M94
17	RTS0510	100	5 0	80C	25m	15m	1 5	1 0m	125	1 8	15	200n	5.0		100	60	125C		M94
18▼	TIC106A	100	5.0	80	5 0m	200u	1 0	1.0m	110C	1.7	5.0				10 Ø	30	110C	1.3	
19	CM101	100	5.0	100C	3.0m	200u	.80	300u†	150C	2 5	5.0	1.0u⊘	1.0	50u⊘	100	30	150A		TO59
20	CM107	100	5 0	100C	3 0m	200u	.80	500u†	150C	3 0	5.0	500n	1.0	50u	150 Ø	20	150A		TO59
21#	CR5-102B	100 †	5.0	125C	150m	80m	3 0	10m	125C	3.0	5.0	2.0u	5.0	12u	20		125C	1 0	TO48
22	B01423	100	5 4	80C	20m	15m	1.5	1.5m	100C	1.6		1.5u	2 0	25u	30 §	100 §		500m†	M507
23	B05423	100	5 4	80C	20m	15m	1.5	1 5m	100C	1 6		1 5u	2.0	25u	30 §	100 §		500m†	S307
24	B18043	100	5.4	80C	20m	15m	1.5	1 5m	100C	1.6		1 5u	2.0	25u	30 §	100 §		500m†	
25	B19043	100	5 4	80C	20m	15m	1.5	1 5m	100C	1.6		1.5u	2 0	25u	30 §	100 §		500m†	
26▼	S1008B	100	5 4	80C	20m	15m	1 5	1 0m	100C	1.6	33	1 5u	2.0	25u§	30 §	100 §	125A	500m†	S307
27▼	S1008G	100	5 4	80C	20m	15m	1 5	1.0m	100C	1 6	33	1.5u	2 0	25u§	30 §	100 §	125A	500m†	M605
28▼	S1008H	100	5 4	80C	20m	15m	1 5	1 0m	100C	1 6	33	1 5u	2 0	25u§	30 §	100 §	125A	500m†	S361
29▼	S1008L	100	5 4	80C	20m	15m	1 5	1 0m	100C	1.6	33	1 5u	2.0	25u§	30 §	100 §	125A	500m†	M507
30#	2SF223	100	6.0	25C		25m	3 0	3 5m	100C	1.2 △	3 0					50	100	5.0 Ø	S141
31#	TM1010	100	6 0	25A	40m⊘	40m	3 0	3 0m	110J	2 0	20	2 0u§	6 0	50u§	50 Ø§	100		120m	S141d
32#	TRA1	100	6 0	25A	50m⊘	40m	3.0	3 0m	110J	2.0	20	2.0u§	6 0	50u§	50 Ø§	100		120m	M94g
33#	TRA1D	100	6 0	25A	50m⊘	40m	3 0	3 0m	110J	2 0	20	2.0u§	6 0	50u§	50 Ø§	100		120m	S131
34▼	GB301	100	6 0	70C	5 0m	200u	750m	10u	70	1.5	2 0	50n	1 0	2 0u	15	100	70A		TO59
35▼	GB301A	100	6.0	70C	5 0m	200u	750m	10u	70	1 5	2 0	50n	1 0	500n	15	100	70A		TO59
36	NCF100C	100	6 0	70B$		30m$	2.0 $	4 5m⊘	60C	1 9 $	4 7			12u⊘		60	100S	.50	S17
37	T106	100	6 0	70	50m	80m	5 0			2 2		2.5u			30 Ø	100	100J		M94
38	T106-5	100	6.0	70	50m	80m	5 0			2 2		2.5u			30 Ø	100	100J		TO5
39	T106-66	100	6 0	70	50m	80m	5.0			2.2		2.5u			30 Ø	100	100J		TO66
40	T106S	100	6 0	70	50m	80m	5 0			2 2		2 5u			30 Ø	100	100J		S131
41#	TW6N100C	100	6 0	85C	60m	50m	3 0	2 0m	125J	2.5	10				5.0 §	60 §	125J	3.0	S131j%
42#	TW6N100H	100	6.0	85C	60m	50m	3.0	2 0m	125J	2 5	10				5 0 §	60 §	125J	3.0	M94e%
43#	CR5-101B	100 †	6 0	95C	150m	80m	3.0	10m	125C	3.0	5.0	2.0u	5 0	12u			125C	1 0	TO48
44	GB201	100 Ø	6 0	100	5 0m	200m	750m	100m§	150	1 5	2 0	50n⊘	1 0	2 0u⊘	20	30	150		TO59
45	GB201A	100 Ø	6 0	100	5.0m	200m	750m	100m§	150	1.5	2 0	50n⊘	1.0	500n⊘	20	30	150		TO59
46#	TP1004	100	6 0	100C	100m	40m	3.0	3 0m		1 2	4.0	2 0u	4 0	30u	100 §⊘	80	125C	500m	S18a
47▼	GCS10	100	6 3	80C	50m	25m	1 5	1 0m	100	1.8	20	1 5u	6 0	4 0u	200 Ø	60 §	110A	500m†	S307
48#	4RCM10	100	6 3	85B	45m	85m	3.0	4.5m	105	1 9	4 0			20u	20	50	105	50	TO64
49	40737	100	6 3	85C	20m	15m	2 0			2 5	100	1.6u	30	15u	10 §	100	100C	40 Ø	M94
50	40741	100	6.3	85C	20m	15m	2 0			2.5	100	1 6u	30	15u	10 §	100	100C	40 Ø	S131
51	40745	100	6 3	85C	20m	15m	2 0			2 5	100	1.6u	30	15u	10 §	100	100C	40 Ø	S304
52	B01430	100	6.35	80C	20m	15m	1 5	1 5m	100C	1.6		1 5u	2 0	25u	30 §	100 §		500m†	M507
53	B05430	100	6 35	80C	20m	15m	1 5	1.5m	100C	1.6		1 5u	2 0	25u	30 §	100 §		500m†	S307
54	B18053	100	6 35	80C	20m	15m	1 5	1 5m	100C	1 6		1 5u	2 0	25u	30 §	100 §		500m†	
55	B19053	100	6 35	80C	20m	15m	1.5	1 5m	100C	1 6		1 5u	2 0	25u	30 §	100 §		500m†	
56▼	S1010B	100	6 35	80C	20m	15m	1 5	1 0m	100C	1 6	41	1 5u	2.0	25u§	30 §	100 §	125A	500m†	S307
57▼	S1010G	100	6 35	80C	20m	15m	1.5	1.0m	100C	1 6	41	1 5u	2 0	25u§	30 §	100 §	125A	500m†	M605
58▼	S1010H	100	6 35	80C	20m	15m	1.5	1 0m	100C	1 6	41	1.5u	2 0	25u§	30 §	100 §	125A	500m†	S361
59▼	S1010L	100	6 35	80C	20m	15m	1 5	1 0m	100C	1.6	41	1 5u	2 0	25u§	30 §	100 §	125A	500m†	M507
60#	BTY79-100R	100 §	6 4	85C	20	30m	3.0	5 0m	125	2 3	20	3 0u	10	20u		80	125	5.0 Ø	TO64
61#	BTY34-100R	100	6.4	110C		30m	3 0	5.0m	150J	2 3	20	3 0u	10	20u		50 *	150J	500m†	TO48
62#	2SF1116	100	6 5	25	6 0	28m	2 0	2 0	125J	1.4	10		3.0	20	50	50	125J	500m	C63c
63#	2SF12	100 ⊘	6 5	60B		20m	2 1	9.0m	100J	2.3	20					50	100J	50	S105a
64#	GC01005	100	7 0	25A	100m⊘	100m	3 0	1 5m		2 0	5.0					35	100J	25	TO48
65	5TCRC	100 ⊘	7.0	60B	50m	50m	3 0	4 0m⊘	125J	83 Ø	5.0 §	2 0u	5 0	30u		60 *	150S	5.0 Ø	S56
66	SCR51A	100 ⊘	7 0	60C	25m	20m	2 0	1 0m△	125C	1 9 △	15	1.0u§	100	20u§		100 §	125J	10	S121
67	SCRF51A	100 ⊘	7 0	60C	50m	20m	2 0	1 0m△	125C	1.9 △	15	2 0u§	10	6 0u§		100 §	125J	10	S121
68	SCRF510	100 ⊘	7 0	60C	50m	25m	2 0	1 0m	125C	1.9 △	15	2.0u§	10	12u§		100 §	125J	10	S121
69	TI3011	100	7 0	60C	30m	25m	3 0	1 0m	125	1 8	5 0						125C	5 0 Ø	M245
70	C12A	100	7 0 △	70C	8 0m⊘	15m	2 0	9 0m	125J	1 8	15	1 0u	10	12u§		60	125J	5.0	S17
71#	T5F100	100	7 0	75	20m	35m	3 0	10m	90J	2 5	25	2 0u	5 0	20u	20	15	45A	.20	S155
72	2N3936	100	7 0	80C	110m	60m	3 2	1 0m	125C	2 3	7 0	3 0u		8 0u§		100 *§	125C	.50	TO64
73	JAN2N1772A	100	7 0	105	25m	30m	2 0	1 0m	25	1 8	14 †	5 0u	5.0	30u	5 0	60	150A		TO64
74	5RC10	100 ⊘	7.4 △	60C	5 0m⊘	15m	2 0	4 5m	105C	1 9	15 †	2.5u	60		20	60 △	105J	.50 †	TO64
75	5RCF10A	100 ⊘	7.4 △	60C	5 0m⊘	15m	1.4	4.5m	125C	1 9	15 †	2 5u	5.0	12u		60 △	125J	50 †	TO64
76	5RC10A	100 ⊘	7 4 △	80C	5 0m	15m	1 4	9 0m	125C	1 9	15 †	2 5u				75 △	125J	.50 †	TO64
77	C20A	100	7.4 △	80	30m	25m	1 5	7 0m	100J	1 8	10					80 §	100J	.50	S191
78	C22A	100	7.4 △	80	30m	25m	1 5	7 0m	100J	1 8	10					80 §	100J	50	M94
79#	CR4-101A	100 †	7.4 △	80	30m	25m	2 0	7 0m	100J	1 8	10	1.1u	8 0	50u	20 △	80 △	125J	5 0 Ø	M94
80#	CR4-101B	100 †	7 4 △	80	30m	25m	2 0	7 0m	100J	1 8	10	1 1u	8 0	50u	20 △	80 △	125J	5 0 Ø	S131
81#	TAG6-100	100	7 5	70C	25m	25m	2 0	5 0m	105	1 7	10					100	105	500m†	TO66
82#	TAG7-100	100	7 5	70C	25m	25m	2 0	5.0m	105	1.7	10					100	105	500m†	TO48
83#	TAG7S100	100	7 5	70C	25m	25m	2 0	5.0m	105	1 7	10			12u		100	105	500m†	TO48
84#	BTX31-100	100	7.5	85	15m	15m	3 0	5 0m	125	1 7	10					100	125	5.0	TO48
85#	BTX31S100	100	7 5	85	15m	15m	3 0	5.0m	125	1 7	10					100	125	5 0	TO48
86#	BTX71-100	100	7 5	85	40m	40m	3.0	5 0m	125	1.7	10	1 4u	5 0	20u	200	100	125	5.0	TO48
87#	BTX71S100	100	7 5	85	40m	40m	3 0	5.0m	125	1 7	10	1 4u	5 0	12u	200	100	125	5 0	TO48
88	2N3754	100	7.5	100	200m	200m	2 3	6 0m	120A				10	75u	200	250 *	120A	2 0	TO48
89#	SF5B11	100	8 0	24		20m	2.0	9 0m	125J	2.0	20					60	125J	500m	S141a
90	MCR2315-3	100 △	8 0 △	70C	50m	40m	1 5	3.0m	100J	1 6	5 0	1 0u	5 0	15u	50 Ø§	80 △	100J	5.0 Ø	S230
91	MCR2614L3	100 △	8 0 △	70C	50m	40m	1 5	3.0m	100J	1.6	5 0	1.0u	5.0	15u	50 Ø§	80 △	100J	5.0 Ø	C85a
92▼	TIC116A	100	8 0	70	40m	20m	1 5	2 0m	110C	1 7	8 0				100 Ø	80	110C	5 0	
93	2N4316	100	8 0	85	25m	15m	1 2	2 0m†	150	2 0	8 0				200	60 §*	150A	50 †	C63d
94#	T6F100C	100	8 0	85C	60m	40m	2 0	2 0m	125J	2 5	20	1 0u⊘	10	12u§	400 §	75 §	125J		S131j%
95#	T6F100H	100	8 0	85C	60m	40m	2 0	2 0m	125J	2 5	20	1.0u⊘	10	12u§	400 §	75 §	125J		M94e%
96#	T6N100C	100	8 0	85C	60m	20m	2 0	2 0m	125J	2 5	20	1.0u⊘	10	17u§	50 §	75 §	125J		S131j%
97#	T6N100H	100	8 0	85C	60m	20m	2.0	2 0m	125J	2 5	20	1 0u⊘	10	17u§	50 §	75 §	125J		M94e%
98#	TW8N100C	100	8 0	85C	60m	50m	3 0	2 0m	125J	1 9	10				5 0 §	80 §	125J	3 0	S131j%
99#	TW8N100H	100	8 0	85C	60m	50m	3 0	2.0m	125J	1 9	10				5 0 §	80 §	125J	3.0	M94e%
100▼	HEPR1242-RT	100	8 0	100J	25m⊘§	20m§										100 §	100		S230
101	MCR2604-3	100	8 0	100J	25m	20m	1 5	2 0m	100J	1 3	5 0	1.0u	5 0	12u	50	100	100J	5 0	M304a
102	MCR2605-3	100	8 0	100J	25m	20m	1 5	2 0m	100J	1 3	5 0	1.0u	5 0	12u	50	100	100J	5 0	M305
103#	BTX64/100R	100	8.5	85C	10m⊘§	65m	3 5	13m	125J	2 0	50	400n	10	10u		140 *	125J	50 †	TO48
104#	BTX75-100R	100	8 5	110B	10m⊘§	65m	3 5	13m	150J	3 0	50	3.0u	10	25u		140	150J	50 †	TO48
105#	TP1006	100	9 0	100C	100m	40m	3 0	3 0m		1.2	6 0	2.0u	6 0	30u	100 §⊘	100	125C	50	S18a
106#	T8F100C	100	9.5	85C	60m	40m	2 0	2 0m	125J	2 0	20	1.0u⊘	10	12u§	400 §	95 §	125J		S131j%
107#	T8F100H	100	9 5	85C	60m	40m	2 0	2 0m	125J	2 0	20	1.0u⊘	10	12u§	400 §	95 §	125J		M94e%
108#	T8N100C	100	9 5	85C	60m	20m	2 0	2.0m	125J	2 0	20	1.0u⊘	10	18u§	50 §	95 §	125J		S131j%
109#	T8N100H	100	9 5	85C	60m	20m	2 0	2 0m	125J	2 0	20	1.0u⊘	10	18u§	50 §	95 §	125J		M94e%
110	NCF100D	100	10		15m⊘	50m	3 5	5 0m	100	1 2	10	500n	10	6 0u	25 §	125	100A	50 †	TO48

SYMBOLS AND CODES EXPLAINED IN INTERPRETER

6. SILICON CONTROLLED RECTIFIERS

IN ORDER OF (1) PEAK REV. VOLT., (2) MAX. CONT. CUR., (3) TEMPERATURE, (4) TYPE No.

LINE No.	4 TYPE No	1 PRV and VBO (V)	MAX. CONT. CURRENT 2 Idc (A)	3 at TEMP (°C)	MAX. HOLD. CUR Ih @ 25°C (A)	MAX. GATE FIRING SPEC at 25°C Igf (A)	Vgf (V)	MAX SAT I Ir@PRV and Is@VBO (A)	at TEMP (°C)	MAX. FWD. VOLT. DROP at 25°C Vf (V)	@ If (A)	SWITCHING TIME at 25°C Ton (s)	for If (A)	Toff (s)	MIN. dV/dt @ 25°C (V/us)	ABS. MAX. RATINGS 1Cy PK SURGE I@25°C (A)	MAX TEMP (°C)	MAX GATE POWER (W)	DWG. No.
1	NCM100E	100	10		25mØ	150m	2 0			1.2	10	500n	10	6.0u	200 §		120A	1.0 †	TO48
2#	BTY84	100	10	25A	20m§	25m§	3.5	12mØ	100J	1 2	16	4.5u§	50	20u§		120	100A	5 0	S98
3#	TRA11	100	10	25A	50mØ	80m	3.0	3.0m	110J	2.0	30	2 0u§	10	50u§	50 Ø§	125		240m	M94g
4#	TRA11D	100	10	25A	50mØ	80m	3 0	3.0m	110J	2.0	30	2.0u§	10	50u§	50 Ø§	125		240m	S131
5	2N1844	100	10 △	35C		150m$	3 5 $	12mØ	35C	2.5 †	10					125 *	100C	.50 †	TO48
6#	CR10B2	100	10	59C		30m	2.5	3.0m	100J	1.6	30					150 △	100J	5.0 Ø	S334
7#	2SF272	100	10	63C	10mØ	30m	2 5	3.0mØ	100J	1.2	10					90	100J	5.0 Ø	S141b
8#	2SF272A	100	10	63C	10mØ	30m	2 5	3.0mØ	100J	1 2	10		10	15u☑	100 △	90	100J	5.0 Ø	S141b
9	RTT0110	100	10	65C	200m	50m	3 0	2 0m	100	2.5	30	200n	10		100	100	100C		TO48
10	RTT0410	100	10	65C	200m	50m	3 0	2 0m	125	2.5	30	200n	10		100	100	125C		TO48
11	RTU110	100	10	65C	20	50m	3 0	2 0m	100	2.5	30	200n	10		100	100	100C		S131
12	RTU0410	100	10	65C	.20	50m	3 0	2 0	125	2.5	30	200n	10		100	100	125C		S131
13▼#	CR10CY2	100	10	66C		40m	2 5	4 0m	125J	2 5	30		10	15u☑	100 △	140 △	125J	5.0 Ø	S350
14#	CR10EY2	100	10	66C		40m	2.5	4 0m	125J	2 5	30		10	15u☑	100 △	140 △	125J	5 0 Ø	S334
15#	CR5-102AB	100	10	70C	20mØ	80m	3 0	10m	100C	2 0	16	2 0u	20	20u☑	20	90	125	5.0 Ø	
16#	CR5-102BB	100	10	70C	20mØ	80m	3.0	10m	100C	2.0	16	2 0u	20	15u☑	20	90	125	5 0 Ø	
17#	CR5-102CB	100	10	70C	20mØ	80m	3.0	10m	100C	2 0	16	2.0u	20	12u☑	20	90	125	5.0 Ø	
18#	CR5-102DB	100	10	70C	20mØ	80m	3.0	10m	100C	2.0	16	2.0u	20	8.0u☑	20	90	125	5.0 Ø	
19#	CR5-102EB	100	10	70C	20mØ	80m	3 0	10m	100C	2 0	16	2.0u	20	6 0u☑	20	90	125	5 0 Ø	
20#	CR5-1029B	100	10	70C	20mØ	80m	3.0	10m	100C	2.0	16	2 0u	20	4 0u☑	20	90	125	5.0 Ø	
21	T110	100	10	70	60m	100m	5 0			2.2		3.0u			30 Ø	100	100J		M94
22	T110S	100	10	70	60m	100m	5.0			2.2		3 0u			30 Ø	100	100J		S131
23#	TAG10-100	100	10	70	25m	25m	3.0	5 0m	105	2 0	15					120	105	5.0	TO48
24#	TAG10S100	100	10	70	25m	25m	3.0	5 0m	105	2.0	15			12u		120	105	5.0	TO48
25	2N1844A	100	10 △	80C		150m$	3.7 $	12mØ	80C	2.5 †	10					125 *	125C	.50 †	TO48
26	B01437	100	10	80C	20m	20m	1.5	1 5m	100C	1.6		1 5u	2.0	25u	30 §	150 §		600mt	M507
27	B05437	100	10	80C	20m	20m	1.5	1 5m	100C	1.6		1.5u	2 0	25u	30 §	150 §		600mt	S307
28	B18063	100	10	80C	20m	20m	1 5	1.5m	100C	1 6		1 5u	2 0	25u	30 §	150 §		600mt	
29	B19063	100	10	80C	20m	20m	1 5	1.5m	100C	1.6		1.5u	2 0	25u	30 §	150 §		600mt	
30▼	S1016B	100	10	80C	20m	20m	1.5	1.0m	100C	1 6	64	1 5u	2.0	25u§	30 §	150 §	125A	600mt	S307
31▼	S1016G	100	10	80C	20m	20m	1.5	1 0m	100C	1.6	64	1 5u	2 0	25u§	30 §	150 §	125A	600mt	M605
32▼	S1016H	100	10	80C	20m	20m	1.5	1 0m	100C	1.6	64	1 5u	2.0	25u§	30 §	150 §	125A	600mt	S361
33▼	S1016L	100	10	80C	20m	20m	1 5	1 0m	100C	1 6	64	1 5u	2.0	25u§	30 §	150 §	125A	600mt	M507
34▼#	CR10C2	100	10	84C		30m	2 5	3.0m	125J	1.6	30				20 △	150 △	125J	5.0 Ø	S350
35#	BTX32-100	100	10	85	25m	25m	3 0	5 0m	125	2 0	15					120	125	5.0	TO48
36#	BTX32S100	100	10	85	25m	25m	3 0	5.0m	125	2.0	15			12u		120	125	5.0	TO48
37#	BTX72-100	100	10	85	40m	40m	3.0	5.0m	125	2.0	15	1.4u	5 0	20u	200	120	125	5.0	TO48
38#	BTX72S100	100	10	85	40m	40m	3.0	5 0m	125	2.0	15	1 4u	5.0	12u	200	120	125	5.0	TO48
39#	TW10N100C	100	10	85C	60m	50m	3.0	2 0m	125J	1.7	10				5.0 §	100 §	125J	3.0	S131j%
40#	TW10N100H	100	10	85C	60m	50m	3 0	2 0m	125J	1 7	10				5 0 §	100 §	125J	3 0	M94e%
41#	CR10-102B	100 †	10	125C	150m	80m	3 0	10m	125C	2 0	10	2.0u	10	30u	20		125C	1.0	TO48
42#	2SF22	100 ☑	11	50B		40m	3.0	13m	100J	2.8	50					125	100J	500m	S236a
43	UCR10	100 △	12	55C	50m	50m				1 2	3 0			15u	250	60	125J	10 ☑	S296
44#	CR8-101C	100 †	12	70C	15mØ	25m	2 5	2.5m	125J	2 0	20	1 1u	8.0	50u	20 △	80 △	125J	5.0 Ø	TO64
45▼	TIC126A	100	12	70	40m	20m	1.5	2 0m	110C	1.4	12				100 Ø	100	110C	5.0	
46#	BTX65/100R	100	12	85B	10m§Ø	65m	3 5	13m	125J	2 0	50	40u	10	10u	25	200	125J	5 †	TO48
47#	CR10-101B	100 †	12	85C	150m	80m	3 0	10m	125C	2.0	10	2 0u	10	30u			125C	1.0	TO48
48#	CR10-102AB	100	12	85C	20mØ	80m	3.0	10m	125C	2 0	50	2 6u	32	20u☑	20	120	125	5.0 Ø	
49#	CR10-102BB	100	12	85C	20mØ	80m	3 0	10m	125C	2.0	50	2 6u	32	15u☑	20	120	125	5.0 Ø	
50#	CR10-102CB	100	12	85C	20mØ	80m	3.0	10m	125C	2 0	50	2.6u	32	12u☑	20	120	125	5 0 Ø	
51#	CR10-102DB	100	12	85C	20mØ	80m	3.0	10m	125C	2.0	50	2 6u	32	8.0u☑	20	120	125	5.0 Ø	
52#	CR10-102EB	100	12	85C	20mØ	80m	3 0	10m	125C	2 0	5.0	2.6u	32	6.0u☑	20	120	125	5.0 Ø	
53#	CR10-1029B	100	12	85C	20mØ	80m	3.0	10m	125C	2.0	5.0	2.6u	32	4.0u☑	20	120	125	5.0 Ø	
54#	BTX76-100R	100	12	110B	10m§Ø	40m	3.0	13m	150J	2.0	50	3.0u	10	25u		200	150J	5 †	TO48
55	40749	100	12 5	75C	20m	15m	2.0			2.4	100	2 0u	30	20u	10 §	200	100C	40 Ø	M94
56	40753	100	12 5	75C	20m	15m	2.0			2.4	100	2 0u	30	20u	10 §	200	100C	40 Ø	S131
57	40757	100	12.5	75C	20m	15m	2.0			2.4	100	2 0u	30	20u	10 §	200	100C	40 Ø	S304
58#	T10N100C	100	12 5	85C	60m	20m	2.0	2 0m	125J	1 8	20	1.0u☑	10	20u§	50 §	120 §	125J		S131j%
59#	T10N100H	100	12 5	85C	60m	20m	2.0	2 0m	125J	1.8	20	1 0u☑	10	20u§	50 §	120 §	125J		M94e%
60#	8RCM10	100	12.6	65B	65m	85m	3.0	6.5m	105	2.6	8 0			20u	20	100	105	.50	TO48
61#	8RCV10	100	12 6	105	50m	45m	2.9	6 5m	105	2.6			100	10u	100	100	105	.50	TO48
62	2N1844B	100	13 △	80C		75m	3 7 $	1 0mØ	125C	1 8 †	13					150 *	125C	5 †	TO48
63	2N3668	100	13	80C	50m	40m	2.0	1.0m	100C	1 8	25					200	100	5 Ø	Z24
64#	2SF73	100	15	25C		50m	3.0	12m	100C	1.2 △	7.0					100	100	5 0 Ø	S94
65#	BTY87/100R	100	15	61A	10mØ§	65m	3.5	13m	125J	3.0	50	3 0u§	10	15u	100	106	125J	50	TO48
66	T115	100	15	70	60m	100m	5 0			2 2		3 0u			30 Ø	100	100J		M94
67	T115S	100	15	70	60m	100m	5 0			2 2		3 0u			30 Ø	100	100J		S131
68#	TAG15-100	100	15	70	50m	50m	3.0	5 0m	105	2 0	20					150	105	5 0	TO48
69#	TAG15S100	100	15	70	50m	50m	3 0	5.0m	105	2 0	20			12u		150	105	5.0	TO48
70#	BTX70-100	100	15	85	50m	50m	3 0	5 0m	125	2 0	20					150	125	5 0	TO48
71#	BTX70S100	100	15	85	50m	50m	3 0	5.0m	125	2 0	20			12u		150	125	5.0	TO48
72#	BTX74-100	100	15	85	50m	50m	3.0	5 0m	125	2.0	20	1.4u	10	20u	200	150	125	5.0	TO48
73#	BTX74S100	100	15	85	50m	50m	3 0	5.0m	125	2 0	20	1 4u	10	12u	200	150	125	5.0	TO48
74	B15003	100	15 8	80C	25m	25m	2 0	1.5m	100C	1 6		1 8u	2.0	25u	30 §	200 §		800mt	M505
75	B16003	100	15 8	80C	25m	25m	2.0	1.5m	100C	1 6		1.8u	2 0	25u	30 §	200 §		800mt	M504
76	B17003	100	15 8	80C	25m	25m	2 0	1.5m	100C	1.6		1.8u	2.0	25u	30 §	200 §		800mt	S308
77	B18003	100	15.8	80C	25m	25m	2.0	1 5m	100C	1 6		1.8u	2.0	25u	30 §	200 §		800mt	
78	B19003	100	15.8	80C	25m	25m	2.0	1 5m	100C	1 6		1 8u	2.0	25u	30 §	200 §		800mt	
79▼	S1025	100	15 8	80C	25m	25m	2 0	1 0m	100C	1.6	100	1 8u	2.0	25u§	30 §	225 §	125A	800mt	M606
80▼	S1025C	100	15.8	80C	25m	25m	2.0	1.0m	100C	1 6	100	1.8u	2.0	25u§	30 §	225 §	125A	800mt	M607
81▼	S1025D	100	15 8	80C	25m	25m	2.0	1.0m	100C	1.6	100	1.8u	2.0	25u§	30 §	225 §	125A	800mt	S362
82▼	S1025G	100	15 8	80C	25m	25m	2.0	1 0m	100C	1.6	100	1 8u	2.0	25u§	30 §	225 §	125A	800mt	M605
83▼	S1025H	100	15 8	80C	25m	25m	2.0	1.0m	100C	1 6	100	1.8u	2 0	25u§	30 §	225 §	125A	800mt	S361
84#	BTY88	100	16	25A	10m§	25m§	3.0	6.5mØ	125J	86	16	4.5u§	50	20u§		140	125A	5.0	S98
85#	TR1	100	16	25A	50mØ	80m	3.0	3.0m	125J	2.0	50	2 0u§	10	50u§	50 Ø	250		240m	S313
86#	TR1015S	100	16	25A	100mØ	80m	3.0	5 0m	125J	2 5	50	2.0u§	10	20u§	200 §	250		240m	S313
87#	TRA21	100	16	25A	50mØ	80m	3.0	3.0m	110J	2.0	50	2.0u§	10	50u§	50 Ø§	250		240m	M94g
88#	TRA21D	100	16	25A	50mØ	80m	3.0	3 0m	110J	2.0	50	2.0u§	10	50u§	50 Ø§	250		240m	M94g
89#	SF10B11	100	16	26		80m	3.5	25m	100C	3.0	50					113	100J	500m	S18
90	2N683	100	16 △	65C		80m$	3.0 $	6.5mØ	125C	2.0 Ø	16					150 *	125C	.50	TO48
91	JAN2N683	100	16 △	65C	50m	80m	3 0	2.0m	25	2.0 †	50	5.0u	10	30u		150	125A	.5 †	TO48
92	10RC10	100 ☑	16 △	65C	10mØ	40m	3.0	6.5mØ	105C	2.3 †	31					125 △	105J	.50 †	TO48
93	RTT0210	100	16	65C	200m	50m	3.0	2.0m	100	2.5	50	.20u	16		100	150	100C		TO48
94	RTT0310	100	16	65C	50m	25m	2 0	1 0m	100	2.0	50	20u	16		100	150	100C		TO48
95	RTT0510	100	16	65C	200m	50m	3.0	2.0m	125	2.5	50	.20u	16		100	150	125C		TO48
96	RTT0610	100	16	65C	50m	25m	2 0	1.0m	125	2.0	50	.20u	16		100	150	125C		TO48
97	RTU0210	100	16	65C	20	50m	3.0	2.0m	100	2.5	50	200n	16		100	100	100C		S131
98	RTU0310	100	16	65C	50m	25m	2 0	1 0m	100	2.0	50	200n	16		100	150	100C		S131
99	RTU0510	100	16	65C	.20	50m	3.0	2.0	125	2.5	50	200n	16		100	100	125C		S131
100	RTU0610	100	16	65C	50m	25m	2 0	1.0m	125	2 0	50	200n	16		100	150	125C		S131
101	2N3650	100	16	70	350m$	500m$	4 5	6.0m	120				100	15u	200	180 *	120C	1.0	TO48
102	2N3655	100	16	70	350m$	500m$	4.5	6.0m	120				100	10u	200	180 *	120C	1.0	TO48
103	MCR3818-3	100	16	70C	50m	40m	1 5			1.2	20	1.0u	20	15u	50 Ø§	240 §	100J	500mt	M94b
104	MCR3918-3	100	16	70C	50m	40m	1 5			1.2	20	1.0u	20	15u	50 Ø§	240 §	100J	500mt	S131k
105#	BTY91/100R	100	16	75B	10mØ§	40m	3.0	13m	125J	2.0	50	3.0u§	10	20u§	100	136	125J	5.0	TO48
106#	11RC10	100	16 △	85B	20m	40m	3.0	6 5m		2 3	10	3 0u	10	25u	20	125	125A	5.0 Ø	S141c
107	C36A	100	16 △	100	20mØ	50m	3 5	12m	100J	1 2		4.5u☑	10	20u		125	100B	50	S18
108▼	HEPR1302-RT	100	16	100J	10mØ§	10m§										250 §	100		S131r
109	16C10	100	16	125J	50m	15m	2 0	10m	125J	2.0	50	7.0u	16	75u§		150	125J	5.0 Ø	TO48#△
110	16C10B	100	16	125J	50m	40m	2 0	10m	125J	2.0	50	7.0u	16	75u§	25	150	125J	5.0 Ø	TO48#△

SYMBOLS AND CODES EXPLAINED IN INTERPRETER

6. SILICON CONTROLLED RECTIFIERS

IN ORDER OF (1) PEAK REV. VOLT., (2) MAX. CONT. CUR., (3) TEMPERATURE, (4) TYPE No.

LINE No.	4 TYPE No.	1 PRV and VBO (V)	MAX. CONT. CURRENT 2 Idc (A)	3 at TEMP (°C)	MAX. HOLD. CUR Ih @ 25°C (A)	MAX. GATE FIRING SPEC at 25°C Igf (A)	Vgf (V)	MAX SAT I Ir@PRV and Is@VBO (A)	at TEMP (°C)	MAX. FWD. VOLT. DROP at 25°C Vf (V)	@ If (A)	SWITCHING TIME at 25°C Ton (s)	for If (A)	Toff (s)	MIN. dV/dt @ 25°C (V/us)	ABS. MAX. RATINGS 1Cy PK SURGE I@25°C (A)	MAX TEMP (°C)	MAX GATE POWER (W)	DWG. No.
1	16C10C	100	16	125J	50m	40m	2.0	10m	125J	2.0	50	7 0u	16	75u§		150	125J	5.0 Ø	TO48#△
2#	CR16-102B	100 †	16	125C	120m	40m	3.0	10m	125C	2.0	16	2.0u	10	20u	20		125C	1.0	TO48
3#	T14F100C	100	17	85C	120m	50m	3.0	10m	125J	2.5	50	1.5u⊘	10	15u§	200 §	200 §	125J		S63g%
4#	T14F100E	100	17	85C	120m	50m	3.0	10m	125J	2.5	50	1.5u⊘	10	15u§	200 §	200 §	125J		M329%
5	2N683A	100	18 △	65C	50m$⊘	40m	3.0 $	1 0mØ	65C	2.1 †	18				200	250 *	125C	.5 †	TO48
6	TIX91	100	18	75C	40m	40m	3.5	1 0m	125	1.6	18				100		125C	5 Ø	M246
7#	12RCM10	100	18 8	65B	65m	85m	3.0	6.5m	105	2.2	12			20u	20	150	105	.50	TO48
8#	BTX12/100R	100	20	25$	40m§	50m	3.0			3.5 §	175	4.0u§	10	10u§	20 §	250	125J	5.0	S182
9#	CR20A2	100	20	57C		50m	3.0	3.0m	100J	1.8	60					300 △	100J	5.0 Ø	S106b
10#	2SF292	100	20	58C	10mØ	50m	3 5	3.0mØ	100	1.3	20					300	100J	5 Ø	S106b
11#	2SF292A	100	20	58C	10mØ	50m	3 5	3.0mØ	100	1.3	20		20	15u⊘	100 △	300	100	5.0 Ø	S106b
12#	TAG20-100	100	20	60	50m	50m	3.0	5.0m	105	1.7	30					175	105	5.0	TO48
13#	TAG20S100	100	20	60	50m	50m	3.0	5.0m	105	1.7	30			12u		175	105	5.0	TO48
14	MCR649-3	100 ⊘	20	65C		80m	3.5	5.0m△	100	.70 Ø	13 §					260 △	100J	5 Ø	TO41
15#	BTX33-100	100	20	70	50m	50m	3.0	5.0m	125	1.7	30					175	125	5.0	TO48
16#	BTX33S100	100	20	70	50m	50m	3 0	5.0m	125	1.7	30			12u		175	125	5.0	TO48
17#	CR20EY2	100	20	74C		50m	3 0	6 0m	125J	2.5	60		20	15u⊘	100 △	300 △	125J	5.0 Ø	S106b
18#	6TW1	100	20	75C$	25m	50m	2.0	10m	100J	1.8 §	50	2.5u§	20	20u§		300	150S	2.0	S17a
19#	CR16-101B	100 †	20	75C	120m	40m	3.0	10m†	125C	2.0	16	2.0u	10	30u			125C	1.0	TO48
20#	CR16-102AB	100	20	75C	7.0mØ	60m	3.0	10m	125C	2.0	50	2.5u	50	20u⊘	20	160	125	5 0 Ø	
21#	CR16-102BB	100	20	75C	7 0mØ	60m	3 0	10m	125C	2 0	50	2.5u	50	15u⊘	20	160	125	5 0 Ø	
22#	CR16-102CB	100	20	75C	7 0mØ	60m	3.0	10m	125C	2.0	50	2 5u	50	12u⊘	20	160	125	5.0 Ø	
23#	CR16-102DB	100	20	75C	7.0mØ	60m	3 0	10m	125C	2.0	50	2.5u	50	8.0u⊘	20	160	125	5.0 Ø	
24#	CR16-102EB	100	20	75C	7 0mØ	60m	3.0	10m	125C	2.0	50	2.5u	50	6.0u⊘	20	160	125	5.0 Ø	
25#	CR16-1029B	100	20	75C	7 0mØ	60m	3.0	10m	125C	2.0	50	2.5u	50	4.0u⊘	20	160	125	5.0 Ø	
26#	BTX81-100R	100	20	85B	100m	80m	3.5			1 8	50						125J	1.0 †	S94a
27	TCR102	100	22	25C$	25mØ§	50m	3 0	3.0mØ	100C	820mØ	20 §	7.5u		12u		150	125C	500m	S148
28#	2SF32A	100 ⊘	22	64B		40m	3 0	13m	125J	2.0	50					150	125J	500m	S236a
29	2N3870	100	22	65		80m	3.0	2.0m	100	1.9 †	69					350	100		M94
30	2N3896	100	22	65		80m	3 0	2.0m	100	1.9 †	69					350	100		S131
31	B15023	100	22	80C	40m	25m	2.0	1.5m	100C	1.6		1.8u	2.0	25u	30 §	300 §		800m†	M505
32	B16023	100	22	80C	40m	25m	2 0	1.5m	100C	1 6		1.8u	2 0	25u	30 §	300 §		800m†	M504
33	B17023	100	22	80C	40m	25m	2 0	1.5m	100C	1 6		1 8u	2.0	25u	30 §	300 §		800m†	S308
34	B18023	100	22	80C	40m	25m	2 0	1 5m	100C	1 6		1 8u	2 0	25u	30 §	300 §		800m†	
35	B19023	100	22	80C	40m	25m	2.0	1.5m	100C	1.6		1.8u	2 0	25u	30 §	300 §		800m†	
36▼	S1035	100	22	80C	40m	25m	2 0	1 0m	100C	1.6	141	1.8u	2 0	25u§	30 §	325 §	125A	800m†	M606
37▼	S1035C	100	22	80C	40m	25m	2 0	1.0m	100C	1 6	141	1 8u	2.0	25u§	30 §	325 §	125A	800m†	M607
38▼	S1035D	100	22	80C	40m	25m	2 0	1.0m	100C	1.6	141	1.8u	2 0	25u§	30 §	325 §	125A	800m†	S362
39▼	S1035G	100	22	80C	40m	25m	2 0	1.0m	100C	1 6	141	1.8u	2.0	25u§	30 §	325 §	125A	800m†	M605
40▼	S1035H	100	22	80C	40m	25m	2.0	1.0m	100C	1 6	141	1 8u	2 0	25u§	30 §	325 §	125A	800m†	S361
41#	TS135	100	22.5	25A	20mØ	80m	3 0	6.0m	125J	2.2	70	5 0u§	15	50u§	50 Ø§	250		240m	S313
42#	T18F100C	100	23	85C	120m	50m	3.0	10m	125J	2.3	60	1 5u⊘	15	20u§	50 §	300 §	125J		S63g%
43#	T18F100E	100	23	85C	120m	50m	3.0	10m	125J	2 3	60	1 5u⊘	15	20u§	50 §	300 §	125J		M353%
44	T125	100	25		60m	100m	5.0			2 2		3.0u				250	100J		M94
45	T125S	100	25		60m	100m	5.0			2.2		3 0u				250	100J		S131
46#	2SF133	100	25	25C		50m	3.0	12m	125C	1.2 △	12					150	125	5.0 Ø	S94
47#	ATS10	100	25	25		100m	2.0												
48	C37A△	100	25 △	25C		80m	3.5	13m	105	2.3	30					125	105C	.50	TO48
49	10RC10A	100 ⊘	25 △	45C	10mØ	90m	2 5	6.5mØ	125C	2 8	50 †	3 0u	10	30u	25 §	200 △	125J	.50 †	TO48
50	10RCF10A	100 ⊘	25 △	45C	10mØ	90m	2.5	6.5mØ	125C	2 8	50 †	3 0u	10	12u§	25 §	200 △	125J	500m†	TO48
51#	SF16B11	100	25	57		40m	3.0	13m	125C	1 9	50					135	125J	500m	S18
52#	2N683AS	100	25	60	50m	40m	3 0	5 0m	125	1 7	30	1 4u	10	12u	200	200	125	5 0	TO48
53#	2N683S	100	25	60	50m	40m	3.0	5.0m	125	1.7	30	1.4u	10	12u	25	200	125	5 0	TO48
54#	BTX73-100	100	25	60	50m	50m	3 0	5 0m	125	1 7	30	1 4u	10	20u	200	200	125	5.0	TO48
55#	BTX73S100	100	25	60	50m	50m	3 0	5.0m	125	1.7	30	1 4u	10	12u	200	200	125	5.0	TO48
56	TI3038	100 †	25 △	60C	130mØ	100m	4 0	3 0m	125C	2.5	25	2 5u	25	2 9u	200	200	125C	5 Ø	TO48
57	C30A	100	25 △	70C	50m	25m	1 5	7.0m	100J	1.5	50					250	100J	.50	S131
58	C31A	100	25 △	70C	50m	9.0m	1 5	7.0m	100J	1.5	50					250	100J	.50	S131
59	C32A	100	25 △	70C	50m	25m	1 5	7 0m	100J	1 5	50					250	100J	50	M94
60	C33A	100	25 △	70C	50m	9 0m	1 5	7.0m	100J	1 5	50					250	100J	50	M94
61	C34A1	100	25	70	50m	25m	1 5	1 0m	100	1 5	50		35	20u⊘	20	250	100J	5.0 Ø	M94
62	C34A2	100	25	70	50m	25m	1 5	1.0m	100	1 5	50		35	20u⊘	20	250	100J	5 0 Ø	S131
63#	21RC10	100	25 △	75B	20m	40m	3 0	6.5m		2.2	16	3 0u	10	25u	20	150	125A	5.0 Ø	S141c
64#	24TB1	100	25	84B		10	3.0	7 5m		2 3	31					180	125	1.0	S266
65#	26TB1	100	25	84B		10	3 0	7 5m		2 3	31					180	125	1 0	S63a
66	2N2575	100	25	85C		80m$	3.5 $	2 5mØ	125C	70 §	16					260 §	125C	.50	TO41
67	MCR1907-3	100 △	25	125J	12m	30m	1 5	4 0m	125J	1 7	20	50u	10	12u⊘	30 §	150	125J	5 †	TO48
68#	BTX82-100R	100	26	87B	10	80	3 5					5.0		50u		550 *	125J	5.0 Ø	TO48
69#	BTX13/100R	100	30	25$	40m§	50m	3 0			3 5 §	250	4 0u§	10	6 0u§	20 §	300	125J	5 0	S189
70#	CR30-01	100	30	50	20	2 0	10		125	1 8	100	4 5u	30	25u	20	350	125	5.0	S314
71#	23TB1	100	31	82B	150m	100m	3.0	7.5m		2 4	63					260	125C	1 0	S266
72#	25TB1	100	31	82B	150m	100m	3 0	7 5m		2 4	63					260	125C	1 0	S63a
73#	CR25-101B	100	32	25	26m	40m	3 0					2.5u	25	150u		210	125	5 0	TO48
74#	8TW1	100	32	75C$	25m	50m	2.0	10m	100J	1 8 §	90	2 5u§	32	20u§		550	150S	2 0	
75#	BTX66/100R	100	32	85B	10mØ§	80m	3 0	13m	125J	3.3	500	50u	50	15u	7 0 Ø	680 *	125J	1 †	TO94
76	C40A△	100	35 △	18B	100m	40m	3 0	10m△	25J	2 0 △	50			12u		150	125J	5.0	TO48
77	SCR161A	100 ⊘	35	25C	50m	25m	2 0	6 0m△	125C	2.0	50	1 0u§	200	20u§		200 §	125J	15	TO48
78	SCRF161A	100 ⊘	35	25C	100m	25m	2.0	6 0m△	125C	2 0	50	20u§	10	6.0u§		200 §	125J	15	TO48
79	SCRF1610	100 ⊘	35	25C	100m	40m	3.0	6 0m△	125C	2.0	50	2 0u§	10	12u§		200 §	125J	15	TO48
80	16RC10A	100 ⊘	35 △	35C	20mØ	40m	2 0	6 5mØ	125C	2.3	70 †		10	75u§	25 §	250 △	125J	50 †	TO48
81	16RCF10A	100 ⊘	35 △	35C	20mØ	40m	2.0	3 0mØ	125C	2 3	70 †		10	12u§	25 §	250 △	125	.50 †	TO48
82	18RC10	100 ⊘	35 △	45C	20mØ	40m	2.0	6 5mØ	125C	2 0	70 †					350 △	125J	.50 †	TO48
83	MCR3835-3	100	35	47C	50m	40m	1.5			1.2	35	1.0u	35	15u	50 Ø§	325 §	100J	500m†	M94b
84	MCR3935-3	100	35	47C	50m	40m	1.5			1.2	35	1 0u	35	15u	50 Ø§	325 §	100J	500m	S131k
85	C38A△	100 ⊘	35	56C	80m	40m	3.0	10m	25J	2.0 △	50	1 4u	5.0	24u	20	150	150C	12	TO48
86	40680	100	35 △	60C	70m	40m	2.0			25	300	2 0u	30	20u	10	300	100C	500m†	S304
87	NL570A	100	35	62	100m	80m	3 0			1 7	50	1 4u	5 0	30u	200	600	125	500m	
88	22RC10	100 ⊘	35 △	70C	20mØ	40m	2.0	6 5mØ	150C	2 3	70 †				20	225 △	150J	500m†	TO48
89#	TK1FA	100	35	85C		300m	3.0	10m	125J	2.0	100	3 0u§	100	20u§	100 §	700		900m	S317
90#	TK1FB	100	35	85C		300m	3.0	10m	125J	2.0	100	3 0u§	100	40u§	100 §	700		900m	S317
91	C38A⊘	100	35	87C	80m	40m	2 5	5 0m	150J	2 0 †	50	1 4u	5 0	24u§		200	150J	500m†	TO48
92	NLC38A	100	35	90C	80m	40m	2 5	5 0m	150J	2.0	50	1 4u	5 0	24u	20	200	150J	50 †	TO48
93▼	HEPR1472-RT	100	35	100J	10mØ§	10m§										325 §	100		S131r
94▼#	5TCA10	100	35	125	60	100m	3 0							100u	100 §	1 5k	125	10	
95	35C10	100	35	125J	200m§	200m	3 0	10m	125J	2 5	220	10u	35	40u§		900	125J	15 Ø	TO94#△
96	35C10B	100	35	125J	200m§	200m	3 0	10m	125J	2.5	220	10u	35	40u§	100	900	125J	15 Ø	TO94#△
97	35C10BF	100	35	125J	200m§	200m	3 0	10m	125J	2.5	220	10u	35	40u§	100	900	125J	15 Ø	TO83#△
98	35C10F	100	35	125J	200m§	200m	3 0	10m	125J	2.5	220	10u	35	40u§		900	125J	15 Ø	TO83#△
99#	CR30-103A	100	36	25	66m	60m	3 0			1.4	30	20u	30	73u		500	125	5 0	TO49
100#	CR30-104A	100	36	25	66m	60m	3.0			1 4	30		30	20u		500	125	5 0	TO49
101#	CR30-204DA	100	38	70C	20uØ	80m	3 0	10m†	125C	2 5	100	20u	100	8 0u⊘	20	660	125	5 0 Ø	TO49
102▼#	6TC10	100	40			100m	3 0			1 3		10u		150u	50 §Ø	1.5k*	125J		S183a
103#	2SF731	100	40	70B		40m	3 0	7 0m	125J	1 7	50				100	300	125J	500m	S18c
104#	27TB1	100	40	74B		10	3.0	15m		2 1	78					450	125C	1 0	S63a
105#	T30F100C	100	40	85C	300m	100m	3.0	10m	125J	1.8	100	2.0u⊘	25	25u§	50 §	800 §	125J		S63g%
106#	T30F100E	100	40	85C	300m	100m	3 0	10m	125J	1.8	100	2.0u⊘	25	25u§	50 §	800 §	125J		M351%
107♦	40RCS10	100 ⊘	40	87C	200m	110m	3 0	3 5m	105J	1 7 †	40	4.5u	10		25 §	1.0k§	105J	500m†	S363
108▼#	6TCA10	100	40	125	60	100m	3 0							100u	100 §	1 5k	125	10	
109	251B	100	40	125J		100m	3 0	15m	125J	1 7	50	4 0u	50	100u	300	1 2k*	125J	3 †	Z59
110#	28TB1	100	47	73B		10	3.0	15m		1 9	95					550	125	1.0	S63a

SYMBOLS AND CODES EXPLAINED IN INTERPRETER

6. SILICON CONTROLLED RECTIFIERS

IN ORDER OF (1) PEAK REV. VOLT., (2) MAX. CONT. CUR., (3) TEMPERATURE, (4) TYPE No.

LINE No.	4 TYPE No.	1 PRV and VBO (V)	MAX. CONT. CURRENT 2 Idc (A)	3 at TEMP (°C)	MAX. HOLD. CUR Ih @ 25°C (A)	MAX. GATE FIRING SPEC at 25°C Igf (A)	Vgf (V)	MAX SAT I Ir@PRV and Is@VBO (A)	at TEMP (°C)	MAX. FWD VOLT. DROP at 25°C Vf (V)	@ If (A)	SWITCHING TIME at 25°C Ton (s)	for If (A)	Toff (s)	MIN. dV/dt @ 25°C (V/us)	ABS. MAX. RATINGS 1Cy PK SURGE I@25°C (A)	MAX TEMP (°C)	MAX GATE POWER (W)	DWG. No.
1#	CR50-01	100	50	50	20	2 0	10		125	1.8	150	4 5u	50	25u	20	650	125	5 0	S142a
2#	2SF1125	100	50	65		100m	3.0	10m	125J	2 3	300		30	30	100	700	125J	500m	S331
3#	BTY95/100R	100	50	75B	10mØ§	80m	3.0	13m	125J	3 3	500	3.0u	50	20u	10	680	125J	5 0	TO49
4#	5TC10	100	50	100J	20m	45m	3.0			1.3	50	5 0u	50	25u		500	100J	20	S185
5	C145A	100	55 △			100m	3.0										125A		S236
6	C146A	100	55 △			100m	3.0							40u☑			125A		S236
7	C147A	100	55 △			100m	3.0							10u☑			125A		S236
8#	TK1	100	55	60C	100m	125m	3 0	10m		2.0	100	5 0u	50	30u	20 Ø	700	100C	50	TO49
9#	2SF112	100 ☑	55	68B		100m	3.5	26m	100J	2 7	500					700	100J	.50	S189d
10#	29TB1	100	55	68B		10	3 0	15m		1.8	110					650	125	1 0	S63a
11	C45A△	100	55 △	85C	100m	75m	3 0	10m	120C	3 1 △	500	5.0u	50	30u§	30 §	700	125J	500m	S315
12	C46A△	100	55 △	85C	100m	75m	3 0	10m	120C	3.1 △	500	5.0u	50	30u§	30 §	700	125J	500m	TO94
13	2191B	100	55	94C		200m	3.0	10m	125J	2.0 §	50	3 5u	50	15u	100	1.2k*	125J	3 †	Z59
14	2192B	100	55	94C		200m	3 0	10m	125J	2.0 §	50	8.0u	50	20u	100	1 2k*	125J	3 †	Z59
15	555A	100	55	99C		150m	3 0								200		125J		TO49
16	556A	100	55	99C		150m	3 0								200		125J		TO83
17#	BTX67/100R	100	62	85B	10mØ			13m	125J	2.5	500	.50u	50	15u	7 0	900	125J	1 †	TO94
18#	T50F100	100	62 5	85C	300m	100m	3.0	20m	125J	2 2	160	2 0u☑	25	30u§	50 §	800 §	125J		M330b%
19	2515B	100	63	120C		10	3.0	15m	150J	1 7	50				300	1.2k	150J		TO83
20#	CR50-103A	100	64	25	73m	100m	3 0									600	125	5.0	TO49
21#	CR50-104A	100	64	25	73m	100m	3.0					5.5u	50	20u		600	125	5 0	TO49
22	2N1911	100	70 △	62C		130m$	3 0 $	6.5mØ	62C	1 9 †	70					1 0k*	125C	.50	TO49
23#	CR70B2	100	70	74C		70m	3 0	6.0m	125J	1 7	220				10 △	1 5k△	125J	5.0 Ø	S189d
24#	36TB1	100	70	75B		15	3 0	15m		2 0	140					760	125	1 0	S63d
25	2N4361	100	70	82C	200m	250m$	5 0 $	10m	125C	2.0 †	70				100	1.6k*§	125C	15 Ø	TO94
26	2N4371	100	70	82C	200m	250m$	5 0 $	10m	125C	2.0 †	70				100	1 6k*§	125C	15 Ø	TO83
27	2N2025	100	70 △	85C		150m$	3.0 $	6 5mØ	85C	1.9 †	70					1 0k*	150C	50	TO49
28#	BTY99/100R	100	70	85B	10mØ§	70m	3 0	13m	125J	2.5	500	3.0u	50	20u	10	900	125J	5.0	TO49
29#	TK110FA	100	70	85C		300m	3.0	10m	125J	2 0	200	3 0u§	100	20u§	100 §	1 0k		900m	S317
30#	TK110FB	100	70	85C		300m	3.0	10m	125J	2.0	200	3 0u§	100	40u§	100 §	1 0k		900m	S317
31▼#	10TCA10	100	70	125	100	100m	3 0							100u	100 §	1 5k	125	.10	
32	70C10	100	70	125J	200m§	200m	3.0	10m	125J	1 8	220	10u	70	40u§		1.6k	125J	15 Ø	TO94#△
33	70C10F	100	70	125J	200m§	200m	3 0	10m	125J	1.8	220	10u	70	40u§		1 6k	125J	15 Ø	TO83#△
34▼#	12TC10	100	80		100m	100m	3 0			1.5		10u		150u	50 §	1.5k*	125J		S183b
35	TCR1050	100	80	70C	25mØ	50m	3 0	4 0mØ	100C	.75 Ø	50 §	4 5u		18u		1.0k	125C	1.0	S147
36	36RC10A	100 ☑	80 △	75C	20 Ø	700m	2.5	6.5mØ	125C	2.2 †	160					850 △	125J	2 0 †	TO94
37	36RCF10A	100 ☑	80 △	75C	20 Ø	700m	2 5	6 5mØ	125C	2.2 †	160		50	20 §		850 △	125J	2 0 †	TO94
38	37RC10A	100 ☑	80 △	75C	20 Ø	700m	2 5	6.5mØ	125C	2.2 †	160					850 △	125J	2.0 †	TO83
39	37RCF10A	100 ☑	80 △	75C	20 Ø	700m	2 5	6 5mØ	125C	2.2 †	160			20 §		850 △	125J	2.0 †	TO83
40	51RCG10	100 ☑	80 △	75C	100m	150m	2 5	15mØ	125C	2.5 †	160		50	20u	100 §	1 2k△	125J	3.0 †	TO94
41	52RCG10	100 ☑	80 △	75C	100m	150m	2 5	15mØ	125C	2 5 †	160			20u	100 §	1 2k△	125J	3.0 †	TO84
42#	CR80-01	100	80	75C	60m	100m	3.0	15m	100J	1 7	250	4 5u	80	30u		800	100	5 0	S284
43#	2SF122	100 ☑	80	78B		100m	3.5	26m	125J	2 3	500					1 0k	125J	50	S189d
44#	51RC10	100	80 △	84B	50m	70m	2 5	6 5		2.2	50	4 5u	50	60u	20	700	125A	5.0 Ø	S237c
45▼#	12TCA10	100	80	125	100	100m	3.0							100u	100 §	1 5k	125	10	
46	250B	100	80	125J		100m	3.0	15m	125J	1.3	50	4 0u	50	100u	300	1 6k*	125J	3 †	Z59
47#	37TB1	100	85	66B		15	3.0	15m		1 9	175					930	125	1 0	S63d
48#	TT1FA	100	95	85C		500m	3.0	25m	125J	2 0	350	3 0u§	100	20u§	100 §	2 0k		1.5	S204a
49#	TT1FB	100	95	85C		500m	3.0	25m	125J	2 0	350	3 0u§	100	40u§	100 §	2 0k		1 5	S204a
50#	CR100-01	100	100	50	20	2.0	10		125	1 7	350	45u	100	25u	20	1.0k	125	5 0	S267c
51#	38TB1	100	100	62B		15	3.0	15m		1 8	205					1 0k	125	1.0	S63d
52#	FT101BX2	100	100	93C		150m	2.0	15m	125J	1 2	100 §		100	30u☑	100 △	2.0k△	125J	16 Ø	M568a
53	100C10	100	100	125J	200m	200m	2.5	25m	125J	2.0	500	10u	100	40u§		2.0k	125J	10 Ø	TO93#△
54	100C10B	100	100	125J	200m	200m	2.5	25m	125J	2 0	500	10u	100	40u§	100	2 0k	125J	10 Ø	TO93#△
55	C154A△	100	110 △		500m	500m	4.0	18m	25C	3.0 †	500 †		50	7.0u§	200 §	1 2k	125J	2 0 Ø	TO94
56	C155A△	100	110 △		500m	500m	4 0	18m	25C	3 0 †	500 †		50	12u§	100 §	1.2k	125J	2.0 Ø	TO94
57	C156A△	100	110 △		500m	500m	4.0	18m	25C	3.0 †	500 †		50	7.0u§	200 §	1 2k	125J	2.0 Ø	S315
58	C157A△	100	110 △		500m	500m	4.0		25C	3.0 †	500 †		50	12u§	100 §	1 2k	125J	2.0 Ø	S315
59♦	JAN2N1793	100	110	60C	40m	70m	3 0	15m	125A	1.8	150	15u	50	40u		1.0k	125A	500m	TO83
60♦	JAN2N1911	100	110	60C	40m	70m	3 0	15m	125A	1.8	150	15u	50	40u		1 0k	125A	500m	TO49
61	2541B	100	110	60C		200m	3.0	10m	125J	1.7 §	50	3 5u	50	15u	100	1.4k*	125J	3 0 †	Z59
62	2542B	100	110	60C		200m	3 0	10m	125J	1.7 §	50	8.0u	50	20u	100	1 4k*	125J	3 0 †	Z59
63	C55A△	100	110 △	60C	100m	75m	3.0	10m	125J	2.5	500	5.0u	50	30u§	20 §	1.0k	125J	5.0	S91
64	C56A△	100	110 △	60C	100m	75m	3 0	10m	125J	2.5	500	5.0u	50	30u§	20 §	1 0k	125J	5.0	S108
65	TK110	100	110	60C	100m	125m	3 0	10m		2 0	200	4.5u	50	20u	40 §Ø	1 0k	125C	.50	TO49
66	71RC10A	100 ☑	110 △	62C	20mØ	70m	2 5	6.5mØ	125J	1.9 †	220		50	30u§		1.0k△	125J	.5 †	TO94
67	71RCF10A	100 ☑	110 △	62C	20mØ	70m	2.5	6 5mØ	125J	1.9 †	220		50	20u§	25 △	1 0k△	125J	50 †	TO94
68	72RC10A	100 ☑	110 △	62C	20mØ	70m	2.5	6.5mØ	125J	1.9 †	220		50	30u§		1 0k△	125J	5 †	TO83
69	72RCF10A	100 ☑	110 △	62C	20mØ	70m	2.5	6 5mØ	125J	1.9 †	220		50	20u§	25 △	1 0k△	125J	50 †	TO83
70	71RCG10	100 ☑	110 △	75C	100m	150m	2.5	15mØ	125C	2.4 †	220		50	15u	100 §	1 4k△	125J	3.0 †	TO94
71	72RCG10	100 ☑	110 △	75C	100m	150m	2 5	15mØ	125C	2 4 †	220			15u	100 §	1.4k△	125J	3 0 †	TO83
72#	71RC10	100	110 △	79B	50m	70m	2.5	6.5m		1 9	70	4 5u	50	70u	20	1.0k	125A	5 0 Ø	S237c
73	NLE155A	100	110	83C	.50	.15	2.5	8.0m	125J	3.0	500	5.0u	50	20u	200	1.4k	125J	2.0 †	TO94
74	NLE157A	100	110	83C	50	15	2.5	8.0m	125J	3.0	500	5 0u	50	20u	200	1.4k	125J	2 0 †	TO83
75	NLF154A	100	110	83C	500m	200m	2.5	8.0m	125J	3.0 †	500	5.0u	50	10u☑	200	1 4k	125J	2 0 †	TO94
76	NLF155A	100	110	83C	500m	200m	2.5	8.0m	125J	3.0 †	500	5.0u	50	20u☑	200	1 4k	125J	2.0 †	TO94
77	NLF156A	100	110	83C	500m	200m	2.5	8.0m	125J	3 0 †	500	5.0u	50	10u☑	200	1.4k	125J	2.0 †	TO83
78	NLF157A	100	110	83C	500m	200m	2.5	8.0m	125J	3.0 †	500	5.0u	50	20u☑	200	1.4k	125J	2.0 †	TO83
79	71RC10B	100 ☑	110 △	85C	20mØ	70m	2.5	6 5mØ	150J	2.2 †	220		50	40u§		1 0k△	150J	5 †	TO94
80	72RC10B	100 ☑	110 △	85C	20mØ	70m	2.5	6.5mØ	150J	2 2 †	220		50	40u§		1.0k△	150J	5 †	TO83
81	JAN2N2025	100	110	87C	40m	130m	3.0	15m	150C	1 6	200	5.0u☑	70	150u☑	20 △	1.0k	150A	500m†	S104b
82	C62A△	100	110 △	87C	100m	75m	3.0	15m	145C	2.5 △	1.5k	5.0u	50	50u		1 0k	150J	500m	S315
83	C60A	100	110	100C	100m	70m	2 5	8.0m	125J	2.5 †	500	5.0u	50	50u§		1.6k	150J	5 †	TO49
84	C62A☑	100	110	100C	100m	70m	2.5	8 0m	125J	2.5 †	500	5.0u	50	50u		1.6k	150J	.50 †	TO83
85	NLC62A	100	110	103C	10	70m	2.5	8 0m	150J	2.5	500	5.0u	50	50u		1.6k	150J	.50 †	TO83
86#	10TC10	100	110	125J	20m	60m	3 0			1 5	110	5.0u	110	25u		1.1k	125J	20	S185
87#	T95F100	100	115	85C	300m	100m	3.0	30m	125J	1 8	300	2.5u☑	50	30u§	50 §	2.0k§	125J		M330a%
88#	2SF343	100	120	25C		100m	3.0	25m	125C	1.2 △	60					1 0k	125	10 Ø	S142
89#	CR120-01	100	120	75C	60m	100m	3.0	15m	125J	2.1	370	4.5u	120	40u		1 0k	125	5.0	S284
90	2505B	100	125	95C		.10	3.0	15m	150J	1.3	50				300	1.6k	150J		TO83
91#	42TB1	100	135	57B		.20	3.0	15m		2.2	265					1 4k	125	1 5	M308
92▼#	30TC10	100	140		150m	100m	3.0			1.5					50 §Ø	3.5k*	125J		S348
93▼#	20TCA10	100	140	125	150	100m	3.0							100u	100 §	3 0k	125	10	
94#	TT1	100	150	60C	300m	500m	3 0	25m	100J	2.2	350	5.0u	15		20 §Ø	2 0k	100C	1.0	S204
95	2N2504	100	150 △	80C	50m	150m$	3.0 $	10m	80C	1.4 †	150					3.5k*	125C	200m†	TO93
96	2N2543	100	150	80C	50m§	150m§	3.0 §	7.5m	80C	1.5	150				4.0	3.5k§	125C	2.0 †	TO93
97#	CR150BX2	100	150	81C		300m	3.0	15mØ	125J	1.9	500			30u☑	100 △	4.0k	125J	16 Ø	S237a
98#	CR150BY2	100	150	81C		300m	3 0	15mØ	125J	1.9	500			50u☑	100 △	4 0k	125J	16 Ø	S237a
99#	FT150BX2	100	150	81C		300m	3 0	15m	125J	1.9	500		150	30u☑	100 △	4 0k△	125J	16 Ø	M567
100#	FT150BY2	100	150	81C		300m	3.0	15m	125J	1.9	500		150	15u☑	100 △	4.0k△	125J	16 Ø	M567
101#	TT210FA	100	150	85C		500m	3.0	25m	125J	2.0	450	3.0u§	100	20u§	100 §	3.2k		1 5	S204a
102#	TT210FB	100	150	85C		500m	3 0	25m	125J	2 0	450	3.0u§	100	40u§	100 §	3.2k		1 5	S204a
103#	FT151BX2	100	150	87C		150m	2.0	15m	125J	1.3	150 §		150	30u☑	100 △	4.0k△	125J	16 Ø	M567
104	150C10	100	150	125J	200m	200m	2.5	25m	125J	1.7	500	10u	150	40u§		3.0k	125J	10 Ø	TO93#△
105	150C10B	100	150	125J	200m	200m	2.5	25m	125J	1.7	500	10u	150	40u§	100	3.0k	125J	10 Ø	TO93#△
106	101RC10	100 ☑	160 △	80C	50mØ	150m	2.5	10mØ	125J	1 7 †	314		150	25u§		2 0k△	125J	2 †	TO93
107#	43TB1	100	175	62B		.20	3.0	15m		2.2	390					1.9k	125	1.5	M308
108▼#	2SF1141	100	175	75C		300m	3.0	15m	125J	1.7 §	500				100 △	4.0k△	125J	16 Ø	S237e
109#	CR150F2	100	175	75C		300m	3.0	15m	125J	1.7 §	500				100 §	4.0k	125J	16 Ø	S237e
110#	FT150B2	100	175	75C		300m	3 0	15m	125J	1 7	500 §				100 △	4.0k△	125J	16 Ø	M567

SYMBOLS AND CODES EXPLAINED IN INTERPRETER

6. SILICON CONTROLLED RECTIFIERS

IN ORDER OF (1) PEAK REV. VOLT., (2) MAX. CONT. CUR., (3) TEMPERATURE, (4) TYPE No.

LINE No.	4 TYPE No.	1 PRV and VBO (V)	MAX. CONT. CURRENT 2 Idc (A)	3 at TEMP (°C)	MAX. HOLD. CUR Ih @ 25°C (A)	MAX. GATE FIRING SPEC at 25°C Igf (A)	Vgf (V)	MAX SAT I Ir@PRV and Is@VBO (A)	at TEMP (°C)	MAX. FWD. VOLT. DROP at 25°C Vf (V)	@ If (A)	SWITCHING TIME at 25°C Ton (s)	for If (A)	Toff (s)	MIN. dV/dt @ 25°C (V/us)	ABS. MAX. RATINGS 1Cy PK SURGE I@25°C (A)	MAX TEMP (°C)	MAX GATE POWER (W)	DWG. No.
1	2N3885	100	175	80	200m	400m	4 0	15m	125	1.8	175					4.5k	125	3.0	TO93
2	C350A	100	175	82C	50	15	2.5	8.0m	125J	2.6	500	8.0u	50	100u	200	1.8k	125J	2.0 †	
3	2201B	100	175	125J		300m	4 0	15m	125J	1.3 §	100	4.0u	100	30u	100	4.0k*	125J	3.0 †	TO93
4	2202B	100	175	125J		300m	4 0	15m	125J	1.3 §	100	8.0u	100	40u	100	4.0k*	125J	3 0 †	TO93
5#	46TB1	100	195	56B		20	3 0	15m		2.0	390					2 1k	125	1.5	M308
6#	2SF311	100 ∅	200	62B		125m	2 5	90m	125J	2 1	1.0k					3.5k	125J	1.0	S167
7	261B	100	200	80		.15	3.0	15m	125J	1.4	100				300	3 3k	125		TO93
8	2181B	100	200	80C		300m	4 0	15m	125J	1 3 §	100	4.0u	100	20u	100	3.3k*	125J	3 †	TO93
9	2182B	100	200	80C		300m	4.0	15m	125J	1.3 §	100	8.0u	100	30u	100	3 3k*	125J	3 †	TO93
10	263B	100	200	85		.15	3.0	15m	125J	1.3	50				300	1.6k	125		M414
11#	TT310	100	200	85C	40mØ	500m	3.0	25m	125J	1.6	600	5.0u§		100u§	100 Ø§	4 0k		1.5	S204a
12	2615B	100	200	105		15	3.0	15m	150J	1.4	100				200	3 3k	150		TO93
13▼#	30TCA10	100	200	125	150	100m	3 0								100 §	5.5k	125	10	
14#	47TB1	100	220	50B		20	3.0	15m		1 9	440					2.4k	125	1.5	M308
15#	20TC10	100	220	125	50m	100m	3.0			1 5	200	5 0u	200	30u		2.5k	125J	20	S183
16#	2SF821	100	230	85B		100m	2.5	90m	125J	1.8	1 0k					4 0k	125J	10	S167
17	NLF180A	100	235 △		500m	150m	2.5	6 0m	125J	2.8	1.5k	8 0u	100	80u	200	3 5k	125J	2 0 †	TO93
18	NLF185A	100	235 △		500m	150m	2.5		125J	2 8	1.5k	8.0u	100	15u	200	3 5k	125J	2.0 †	TO93
19	151RC10	100 ∅	235 △	62C	50mØ	100m	2.5	10mØ	125J	1.7 †	471		150	25u§		3.0k△	125J	2 †	TO93
20	151RC10A	100 ∅	235 △	80C	50mØ	100m	2 5	10mØ	125J	1.4 †	471		150	40u§		3.5k△	125J	2 †	TO93
21▼	151RF10	100 ∅	235	80C	200m	200m	2.5	15m	125C	1.9 †	471		250	20u§	200 §	4 2k△	125J	3.0 †	TO93
22	C180A△	100	235 △	80C	500m	150m	3.0	10m	25	2.9 †	1.5k	8.0u	100	30u	200	3.5k	125C	2.0	TO93
23	C185A△	100	235 △	80C	500m	300m	3 0	10m	25	2 9 †	1.5k	8.0u	100	15u	200	3 5k	125C	2.0	TO93
24#	TT210	100	235	80C	250m	500m	3.0	25m	125J	1 7	450	5.0u	15	20u	100 §Ø	3 2k	125C	1 0	S204
25#	CR250GX2	100	250	50C		350m	4.0	15m	125J	1.9	780 §		250	30u∅	100 △	5.0k△	125J	16 Ø	M569
26#	CR250GY2	100	250	50C		350m	4 0	15m	125J	1 9	780 §		250	15u∅	100 △	5 0k△	125J	16 Ø	M569
27#	FT250BX2	100	250	52C		350m	4 0	15m	125J	1 9	780 §		250	30u∅	100	5.0k△	125J	16 Ø	M567
28#	FT250BY2	100	250	52C		350m	4 0	15m	125J	1 9	780 §		250	15u∅	100 △	5 0k△	125J	16 Ø	M567
29#	CR250AX2	100	250	61C	30m	350m	4 0	15m	125J	1 9	780 §		250	30u∅	100 △	5.0k△	125J	16 Ø	S158b
30#	CR250AY2	100	250	61C	30m	350m	4 0	15m	125J	1 9	780 §		250	30u∅	100 △	5 0k△	125J	16 Ø	S158b
31#	FT251BX2	100	250	62C		150m	2 0	15m	125J	1.2	250 §		250	30u∅	100 △	5.0k△	125J	16 Ø	M567
32#	2SF535	100	250	65C		350m	4.0	15mØ	125J	1 8	780				10 △	5.0k	125J	16 Ø	S158b
33#	CR250F2	100	250	65C		350m	4 0	15m	125J	1 8 §	780				100 §	5 0k	125J	3.0 †	S158e
34	2N3354	100	250	80C	200m§	400m§	4 0 §	15m	125C	2 0 §	250					5.0k§*	125C	3.0 †	TO108
35#	61TB1	100	275	67B		.30	3.0	40m		2 4	665					3 2	125	2 0	M308a
36	260B	100	275	80		.15	3 0	15m	125J	1.2					300	3 3k	125		TO93
37	2605B	100	275	105		15	3 0	15m	150J	1 2	100				300	5.0k	125		TO93
38▼#	40TC10	100	300		150m	100m	3 0			1.5					50 §Ø	4.5k*	125J		S348
39#	CR300AW2	100	300	11A	30mØ	350m	4 0	15m	125J	1 9 §	780			50 §	100 §	5.0k	125J	16 Ø	S300
40#	CR300AX2	100	300	11A	30mØ	350m	4 0	15m	125J	1 9 §	780			30 §	100 §	5.0k	125J	16 Ø	S300
41#	CR300AY2	100	300	11A	30mØ	350m	4 0	15m	125J	1 9 §	780			15 §	100 §	5 0k	125J	16 Ø	S300
42▼#	2SF922	100	300	15A		350m	4.0	15m	125J	1 8 §	780				100 △	5.0k△	125J	16 Ø	S300
43#	CR300F2	100	300	15A		350m	4 0	15m	125J	1.8 §	780				100 §	5.0k	125J	16 Ø	S300
44	273B	100	300	70		15	3 0	15m	125J	1 3	100				300	3.3k	125		M414
45#	FT300C2	100	300	73C		350m	4 0	30m	150J	1 7	950 §				50 △	5 0k△	150J	16 Ø	M567
46#	FT301AX2	100	300	74C		150m	2.0	15m	125J	1.2	300 §		300	30u∅	100 △	6 0k△	125J	16 Ø	M567a
47▼#	FT300A2	100	300	81C		200m	3 0	30m	125J	1.6	940 §				200 △	6 0k△	125J	16 Ø	M567a
48▼#	40TCA10	100	300	125	150	100m	3.0								100 §	5.5k	125	10	
49	2231B	100	300	125J		300m	4.0	15m	125J	1 3 §	100	4 0u	100	30u	100	4 5k*	125J	3 0 †	M247
50	2232B	100	300	125J		300m	4 0	15m	125J	1 3 §	100	8 0u	100	40u	100	4 5k*	125J	3 0 †	M247
51	2248B	100	300	125J		300m	4 0	15m	125J	1 0 §	100	5.0u	150	50u	100	5 0k*	125J	3 0 †	M308c
52#	62TB1	100	315	65B		300m	3 0	40m		2 2	665					3.7k	125	2 0	M308a
53#	70TB1	100	355	67B		30	3 0	40m		2.2	850					4 1	125	2 0	M308a
54	C380A	100	380	65C	500m	150m	3 0 §	10m	25C	2.8	1 5k	8.0u	100	100u	200	3 5k	120	2 0	M514
55	NLF380A	100	380	67	500m	150m	2 5	10m	25	2 8	1 5k	8 0u	100	100u	200	3 5k	125	2 0	
56	NLF385A	100	380	67	500m	150m	2.5	10m	25	2 8	1 5k	8 0u	100	20u	200	3 5k	125	2 0	
57	2N3531	100	400	20A	200m§	400m	4 0	15m	125J	1 9	250					5 0k	125J	16	M247
58#	71TB1	100	400	65B		30	3 0	40m		2 0	850					4 6k	125	2 0	M308a
59#	FT500AY2	100	400	75C		350m	4.0	30m	125J	2 2	1.2k§		400	15u∅	200 △	7 0k△	125J	16 Ø	M406
60#	251RC10	100	400 △	85B	40m	.15	2 5	10m		1 5	250	6 0u	50	100u	4.0	4 8k	125A	10 Ø	S158d
61#	73TB1	100	430	64B		30	3 0	40m		2.0	1.0k					5 1k	125	2.0	M308a
62	276B	100	470			15	3 0	15m	125J	1 2	100				300	5 5k	125		M247
63	C291A△	100	470 △			150m	3 5										125A		S247a
64#	74TB1	100	470	63B		300m	3 0	40m		1 8	1.0k					5 6k	125	2.0	M308a
65	6RW71BY	100	470	65C		250m	3 1	10mØ	125J	65 Ø	300				4 0	5 5k§	125	16	S132
66♦	C290A	100	470	65C	100m	150m	3 5			1 2	500	10u	5.0	250u§	100 §	5 5k	125J	3 0	S132
67	C291A∅	100	470	66C	100m	150m	3 0	15m	125J	1 2 †	500	5 0u	5 0	100u§	100 §	5 5k	125J	3 0 †	M331a
68	NLC295A	100	470	67	100m	150m	3.0	15m	125	1 2	500	5 0u	5 0	20u	100	5 5k	125	3 0	
69	NLC297A	100	470	67	100m	150m	3 0	15m	125	1 2	500	5 0u	5 0	20u	100	5 5k	125	3 0	
70	NLF290A	100	470	67	100m	150m	3 0	15m	125	1 2	500	5.0u	5 0	100u	100	5 5k	125	3 0	
71	NLF295A	100	470	67	100m	150m	3.0	15m	125	1 2	500	5 0u	5 0	20u	100	5 5k	125	3 0	
72	NLF297A	100	470	67	100m	150m	3 0	15m	125	1 2	500	5 0u	5 0	20u	100	5 5k	125	3.0	
73	272B	100	470	71		15	3.0	15m	125J	1 2	100				300	5 5k	125		M414
74#	301RC10	100	470 △	85B	40m	15	2.5	10m		1 4	300	6 0u	50	100u	4.0	5 5k	125A	10 Ø	S158d
75	NLF291A	100	470 △	125J	100m	150m	2 5	15m	125J	1.2	500	5 0u	100	100u§	100 §	5 5k△	125J	2.0 †	M436
76#	80TB1	100	510	59B		30	3 0	40m		1 5	1 2k					6 4k	125	2 0	M308a
77#	CR7K203A3	100	520	55C	140m	150m	3 5			1.5	1 0k					7 0k*§	125J	5.0 Ø	M308b
78▼	NLC501A	100	550	25	250m	150m	6 5 §			1 5	1 0k			200u§	100 §	7 0k	125J	5 0 †	M593
79#	81TB1	100	550	56B		30	3 0	40m		1 7	1 2k					7 0k	125	2 0	M308a
80	270B	100	550	67		.15	3 0	15m	125J	1 2	500				300	6 5k	125		S295
81#	84TB1	100	595	58B		30	3 0	40m		1.6	1.6k					8 6k	125	2.0	M428
82#	91TB1	100	620	58B		.30	3 0	40m		1 4	1 6k					8.6k	125	2 0	M428
83	C507A	100	625 △	125J	100m	150m	4 0	50m	125C	1 4	500	5 0u	25	100u∅	100	6 5k	125J	26	M464
84	C508A	100	625 △	125J	100m	150m	4 0	50m	125C	1 3	500	5 0u	25	60u∅	100	9.0k	125J	26	M464
85#	94TB1	100	700	55B		30	3 0	40m		1 2.	1 6k					8 6k	125	2 0	M428
86	C530A	100	980 △	125J	250m	150m	4 0	25m	125J	1 2	1 1k	4 0u	25	150u∅	100	10k	125J	26	M464
87	C520A	100	1 1k△	150J	250m	150m	4 0	25m	125C	1 2	1 1k	4 0u	25	150u∅	100	10k	150J	26	M464
88#	CRS1/10AF	110	1 25	65C	20m	10m	3 0	1 0m△	125J	1.2	1 5	2.0u	1.0	15u	15	20	125J	1.0	TO5
89#	CRS3/10AF	110	4.5	90B	25m	20m	3 0	1.0m△	125J	1.3	4 5	2.0u	3 0	17u	15	55	125J	2 0	S62
90#	BTX18-100	120	1.6	100C	5 0m	5.0m	2 0	80m	125J	1 5	1 0		30	60u	25	10 *	125	05 †	TO5
91	C37A∅	120	25	37C	20mØ	80m	3 0	5.0m	105J	2.3 †	30	1 4u	5.0			175	105J	.50 †	TO48
92	C40A∅	120	35	62C	10mØ	40m	2.5	5 0mØ	125J	2.0 †	50	1.4u	5 0	8 0u	200 §	150	125J	50 †	TO48
93	C45A∅	120	55	89C	100m	70m	3 0	8 0m	125J	3.0 †	500	5.0u	50	30u§	200 §	1 2k	125J	.50 †	TO83
94	C46A∅	120	55	89C	100m	70m	3 0	8.0m	125J	3 0 †	500	5 0u	50	30u§	200 §	1 2k	125J	.50 †	TO49
95	NL555A	120	55	89C	300m	150m	2 5	10m	125J	3 5 †	500	8 0u	50	100u§	200 §	1 2k	125J	2 †	TO49
96	NL556A	120	55	89C	300m	150m	2 5	10m	125J	3 5 †	500	8 0u	50	100u§	200 §	1 2k	125J	2 †	TO83
97	2N1793	120	70 △	65C		130m$	3 0 $	6 5mØ	65C	1.8 †	70					1.0k*	125C	.50 †	TO83
98	C55A∅	120	110	60C	100m	70m	2 5	8 0m	125J	2 5 †	500	5 0u	5.0	15u§	200 §	1.2k	125J	50 †	TO49
99	C56A∅	120	110	60C	100m	70m	2 5	8 0m	125J	2.5 †	500	5 0u	5 0	15u§	200 §	1 2k	125J	500m†	TO83
100	C154A∅	120	110	83C	500m	200m	2 5	8 0m	125J	3.0 †	500	5.0u	50	7 0u§	200 §	1.4k	125J	2 0 †	TO94
101	C155A∅	120	110	83C	500m	200m	2 5	8 0m	125J	3 0 †	500	5 0u	50	12u§	200 §	1.4k	125J	2 0 †	TO94
102	C156A∅	120	110	83C	500m	200m	2 5	8 0m	125J	3.0 †	500	5 0u	50	7 0u§	200 §	1.4k	125J	2 0 †	TO83
103	C157A∅	120	110	83C	500m	200m	2 5	8 0m	125J	3 0 †	500	5 0u	50	12u§	200 §	1 4k	125J	2 0 †	TO83
104	C178A	120	200	64C	500m	300m	2 5	12m	125J	3 5 †	1 5k	8 0u	100	150u§	200 §	2 5k	125J	2 0 †	TO93
105	C181A	120	235	65C	500m	300m	2 5	12m	125J	3.5 †	1 5k	8 0u	100	30u§	200 §	2.5k	125J	2.0 †	TO93
106	C180A∅	120	235	80C	500m	150m	2 5	6.0m	125J	2 9 †	1 5k	8 0u	100	30u§	200 §	3.5k	125J	2 0 †	TO93
107	C185A∅	120	235	80C	500m	300m	2 5	12m	125J	2.9 †	1 5k	8 0u	100	15u§	200 §	3.5k	125J	2 0 †	TO93
108#	CS11E	125	75	40C	12m	7 0m	25	1 0m†		2 2 †	2 4					20	100C	05	TO5
109	2N4148	150			5.0m	1 0m	80									8 0 *§	110A	2 Ø	C41d
110#	2SF229	150	10	25J	2.0mØ	50m	1 0	01m	25	2 0	.30					2 0	100J		TO18

SYMBOLS AND CODES EXPLAINED IN INTERPRETER

6. SILICON CONTROLLED RECTIFIERS

IN ORDER OF (1) PEAK REV. VOLT., (2) MAX. CONT. CUR., (3) TEMPERATURE, (4) TYPE No.

LINE No.	4 TYPE No.	1 PRV and VBO (V)	MAX. CONT. CURRENT 2 Idc (A)	3 at TEMP (°C)	MAX. HOLD. CUR Ih @ 25°C (A)	MAX. GATE FIRING SPEC at 25°C Igf (A)	Vgf (V)	MAX SAT I Ir@PRV and Is@VBO (A)	at TEMP (°C)	MAX. FWD. VOLT. DROP at 25°C Vf (V)	@ If (A)	SWITCHING TIME at 25°C Ton (s)	for If (A)	Toff (s)	MIN. dV/dt @ 25°C (V/us)	ABS. MAX. RATINGS 1Cy PK SURGE I@25°C (A)	MAX TEMP (°C)	MAX GATE POWER (W)	DWG. No.
1	C6205	150	20	75A	5.0m	200u	.80	100u	100	1 5	.20						150		M185a
2	RTH0115	150	20	80C	5.0m	20m	1 0	10m	100	1 5	.20	20u	.20		100	5 0	100C		M443
3	RTH0215	150	.20	80C	10m	1.0m	1 0	1.0m	125	2 5	.20	.20u	.20		100	5 0	125C		M443
4	RTH0315	150	20	80C	10m	20m	1 0	50m	125	1 5	.20	.20u	.20		100	5.0	125C		M443
5	RTH0415	150	.20	80C	5 0m	.10m	80	10m	125	1.5	.20	20u	.20		100	5 0	125C		M443
6	RTH0515	150	20	80C	3.0m	.02m	80	02m	125	1 3	.20	20u	.20		100	5.0	125C		M443
7	RTH0615	150	20	80C	2 0m	.02m	.70	02m	125	1 2	20	20u	.20		100	5 0	125C		M443
8	RTA0115	150	25	80A	5.0m	20m	1.0	10m	100	1 5	.25	20u	.25		100	6.0	100A		TO46
9	RTB0115	150	.25	80A	5.0m	200u	1 0	100u	100	1 5	.25	200n	25		100	6.0	100A		TO52
10	RTB0215	150	25	80A	10m	1 0m	1 0	1 0m	125	2 5	25	200n	.25		100	6.0	125A		TO52
11	RTB0315	150	25	80A	10m	20m	1 0	.50m	125	1 5	.25	20u	.25		100	6.0	125A		TO52
12	RTB0415	150	.25	80A	5.0m	.10m	.80	10m	125	1 5	.25	.20u	.25		100	6.0	125A		TO52
13	RTB0515	150	.25	80A	3 0m	.02m	80	.02m	125	1 3	.25	.20u	25		100	6.0	125A		TO52
14	RTB0615	150	25	80A	2.0m	.02m	70	02m	125	1 2	.25	20u	.25		100	6.0	125A		TO52
15	RTC0115	150	.25	80A	5.0m	.20m	1 0	10m	100	1 5	20	.20u	.25		100	6.0	100A		TO18
16	RTC0215	150	25	80A	10m	1 0m	1 0	1.0m	125	2.5	.25	20u	.25		100	6.0	125A		TO18
17	RTC0315	150	25	80A	10m	.20m	1.0	50m	125	1 5	.25	20u	.25		100	6.0	125A		TO18
18	RTC0415	150	25	80A	5 0m	10m	80	.10m	125	1.5	25	.20u	.25		100	6.0	125A		TO18
19	RTC0515	150	25	80A	3 0m	.02m	.80	.02m	125	1 3	.25	20u	.25		100	6.0	125A		TO18
20	RTC0615	150	.25	80A	2.0m	.02m	.70	.02m	125	1 2	.25	20u	25		100	6.0	125A		TO18
21	2N5063	150	255m	102C	10m$	350u$	1 2 $	50u	125C	1.7	1 2					6.0	125C	10m†	TO92
22	2N888A	150	.275	25	1 0m	50u	60	20u	125	1 5	.20	1.2u	.20	3.2u		1.0	150A		TO18
23	3A3150A	150	30	75A	50m	10m	2 0	.01m	25	2.5	50	.50u	.50			5.0	150		TO9
24	2N880	150 †	.35	100C	5 0m	.20m	.80	10m△	125C	1 5	20					20 *§	150C		TO18
25	2N888	150 †	35	100C	1.0m	02m	.60	02m△	125C	1.5	20					20 *§	150C		TO18
26	3F150	150	.35	100	10m	2 0m	1 5	01m	25	1.5	.20	40u	50	10u		5.0	150		TO18
27	2N4335	150	39	25	1.0m	.01m	.80			1.5	.80			10u		8.0	125A	.02	TO52
28	3C6150	150	50	100C	50m	10m	2 0		125C	2.0	20						125A		TO9
29	ID103	150	500m	100	5 0m	200u	800m	50u	125	1.7	1 0	1.5u	1.0	10u		6.0	125		TO18
30	RTJ0215	150	510m	55C	10m	1 0m	1 0	1.0m	125	2.5	250m†				100	6.0	150S	10m†	TO92
31	RTJ0515	150	510m	55C	3.0m	20u	800m	20u	125	1.3	250m†				100	6.0	150S	10m†	TO92
32	2N1932	150	75	55A$	80m$	30m$	2 0 $	75mØ	125A	1.4 $	75					30 §	125A	10	M77
33	3A3150	150	.80	100	50m	10m	2 0	01m	25	2 5	.50	.50u	.50	5.0u		5.0	150		TO9
34▼	HEPR1004-RT	150	800m	100J	5.0mØ§	200u§										6.0 §	125		TO92
35	MCR115	150 △	800m△	110C	5 0m	200u	800m	100u	110C	1.7	1.0 †					6 0 *	110J	10m†	TO92
36	RTD0115	150	1 0	80C	5 0m	.20m	1.0	.10m	100	1.5	1 0	.20u	1 0		100	15	100C		TO5
37	RTD0215	150	1.0	80C	10m	1 0m	1 0	1 0m	125	2.5	1.0	.20u	1 0		100	15	125C		TO5
38	RTD0315	150	1.0	80C	10m	20m	1.0	.50m	125	1 5	1 0	.20u	1 0		100	15	125C		TO5
39	RTD0415	150	1.0	80C	5.0m	10m	80	10m	125	1.4	1.0	.20u	1 0		100	15	125C		TO5
40	RTD0515	150	1 0	80C	3.0m	.02m	.80	.02m	125	1.4	1 0	.20u	1 0		100	15	125C		TO5
41	RTD0615	150	1 0	80C	2.0m	.02m	.70	.02m	125	1.3	1 0	.20u	1 0		100	15	125C		TO5
42	RTF0115	150	1.0	80C	5.0m	.20m	1 0	.10m	100	1.5	1.0	20u	1.0		100	15	100C		TO5
43	RTF0215	150	1 0	80C	10m	1.0m	1 0	1 0m	125	2.5	1.0	20u	1.0		100	15	100C		TO5
44	RTF0315	150	1 0	80C	10m	20m	1 0	.50m	125	1.5	1 0	20u	1 0		100	15	125C		TO5
45	RTF0415	150	1 0	80C	5 0m	10m	80	10m	125	1.4	1.0	20u	1.0		100	15	125C		TO5
46	RTF0515	150	1 0	80C	3 0m	.02m	80	02m	125	1 3	1.0	20u	1.0		100	15	125C		TO5
47	RTF0615	150	1.0	80C	2 0m	.02m	.70	.02m	125	1.3	1.0	.20u	1.0		100	15	125C		TO5
48	2N4215	150	1 0	85	7 0m	300u	1.0	200u	125	2.0 †	3.1					15 §*	125A	10 Ø	TO5
49	2N1884	150	1 0	100C		2.0m	2.0	.20m	125C	2 0	1.0					20 *§	150C		TO9
50	3B150S	150	1 0	100		2 0m	2.0	01m	25	2 5	2 0	1.2u	.50	10u		6.0	150		S135
51	C9G	150	1 1	18A	20m	8 0m	2 0	1 5mØ	125J	1 1 Ø	1 1			12u		30 §	125J	5.0	M77
52	2N1873	150	1.25	100C	5 0m	.20m	80	10m△	125C	2.5	2 0					20 §*	150C		TO9
53	2N1879	150	1.25	100C	3 0m	02m	.60	10m†△	125C	2 5	2.0					20 *§	150C		TO9
54	2N1879A	150	1 25	100	3.0m	20u	.60	5.0u	25	2.5	2.0	100n	50	500n		5 0	150		TO9
55	FT1873	150 △	1.25	100C	5.0m	.20m	.80	10m△	125C	2.5 †	2.0				150 Ø	20 *§	150J		TO5
56	FT1884	150 △	1.25	100C	2.0m	2 0m	2 0	20m	125C	2 0 †	1 0				150 Ø	20 *§	150J		TO5
57#	13T4	150	1.6 △	25C	1.5mØ	10m	3.0	.25m△	25J	2.0	1 0			20u		15	100J		TO5
58	2N2347	150	1.6	55C	1 0m$	75u$	1.0 $	100u△	100C	1.5 §	1.6					15 §	100C	10m	TO5
59#	SF1C11A	150	1.6	62C	10m	1.0m	800m	100u	100J	3.4	10					17	150	100m	TO5
60♦	ID202	150	1 6	70C	3.0m	200u	800m	100u	110	2.2	4.0	1 0	1.0	40u	20 Ø	15	110A		TO39
61♦	ID603	150	1 6	70C	3.0m	200u	800m	100u	110	2 5	4 0	1 0	1.0	40u	20 Ø	15	110A		TO39
62	2N2325	150	1.6	85C	3 0m$	35m$	1.0 $	.10m△	125C	1.5 §	1.6					15 §	125C	01	TO5
63	2N2325A	150	1.6	85C	3 0m$	75u$	90 $	100u	125C	1.5 §	1.6					15 §	125C	10m	TO5
64	C6214	150	1 6	85C	2 0m	200u	.80	100u	125	1.5	1.6						150		M185b
65	C6G	150 Ø	1.6 △	87C	5 0m	1.0m	80	.01m	25J	1.4 △	1 0	1 4u	1 0	40u		10 △	125J	.10	TO5
66#	SF1C11	150	1 6	89C	10m	1.0m	800m	100m	125C	3.4	10					17	125	100m	
67	C511G	150 Ø	1 6	104C	2 0m	20m	.80	01m	25J	2.2 △	4.0					15 §	125J	.10	M181a
68	C611G	150 Ø	1.6 △	104C	5.0m	1 0m	.80	01m	25J	1 4 △	1 0	1.4u	1 0	40u		10 △	125J	10	TO5
69	SCRFL15	150 ⊘	1.7	80C	50m	15m	2 0	1.5m	125C	1.2 △	1.0	2.0u§	1 0	12u§		60 §	125C	5.0	A130
70	C15G	150	3.0	75C	30m	25m	2.5	8.0m	105J	1 8 †	15					60	105J	.50	TO64
71	NCR150B	150	3 0	80B$		25m	2 5	1 0m	125C	2.0 §	1 0					25 §	100A		S17
72	3B3150	150	3.0	85C	10m	20m	80	.01m	25	1.8	3 0				50	15	150C		S223
73	SCR315	150 ⊘	4.0	80C	25m	10m	2.0	1.0m△	125C	2.0 △	3.0	1 3u§	1.0	15u§		60 §	150J	5.0	S62
74	3TCRD	150 ⊘	4.2	60B	50m	50m	3.0	3.5mØ	125J	1.4 Ø	3 0 §	2 0u	3.0	30u		40 *	150S	5 Ø	S56
75	2N1773	150	4.7 △	60C		30m$	2.0 $	8.0mØ	125C	1.9 †	4.7					60 *	125C	.50	TO64
76#	BTY79	150	4.7	60B	10mØ§	25m$	2 0	8 0mØ	125J	2 3	20	3.0u§	10	15u§	100 Ø	60	125J	5.0	S172
77	3RC15	150 ⊘	4.7 △	92C	5.0mØ	15m	2.0	4.0m	105C	2.0	9 4 †					30 △	105J	.50 †	TO64
78	2N1773A	150	4 7 △	105C	80m$⊘	30m$	2 0 $	8.0mØ	150C	1 9 †	4.7					60 *	150C	.50	TO64
79#	2SF263	150	5.0	73C	10mØ	30m	2 5	3.0mØ	100J	1.3	5 0					90	100J	5 Ø	S141b
80#	2SF263A	150	5 0	73C	10mØ	30m	2.5	3 0mØ	100J	1.3	5 0		5 0	15m⊘	100 △	90	100J	5.0 Ø	S141b
81#	CR8-15	150	5.0	75C	30m	30m	2.0	2 0m	100J	2.0	15	1.0u	5.0	30u		120	100	5.0	M408
82#	2SF224	150	6.0	25C		25m	3.0	3.3m	100C	1.2 △	3.0					50	100	5 Ø	S141
83#	BTY79-150R	150	6.0	70A	15m§	25m	2.0	8.0mØ	125J	2.3	20	5.0u§	10	15u§		40	125J	5.0	S172
84	NCF150C	150	6.0	70B$		30m$	2.0 $	4.5mØ	60C	1.9 $	4 7			12u⊘		60	100A	.50	S17
85	5TCRD	150 ⊘	7.0	60B	50m	50m	3 0	3.5mØ	125J	.83 Ø	5.0 §	2.0u	5.0	30u		60 *	150S	5 Ø	S56
86	SCRF515	150 ⊘	7.0	60C	50m	25m	2.0	1.0m	125C	1.9 △	15	2.0u§	10	12u§		100 §	125J	10	S121
87	C12G	150	7.0 △	70C	8.0mØ	15m	2.0	9.0m	125J	1.8	15	1.0u	10	12u§		60	125J	5.0	S17
88	5RC15	150 ⊘	7.4 △	60C	5.0mØ	15m	2.0	4.5m	105C	1.9	15 †	2.5u	60		20	60 △	105J	.50 †	TO64
89	5RCF15A	150 ⊘	7.4 △	60C	5 0mØ	15m	1.4	4.5m	125C	1.9	15 †	2.5u	5.0	12u		60 △	125J	.50 †	TO64
90#	SF5C11	150	8 0	24		20m	2.0	8.0m	125J	2.0	20					60	125J	500m	S141a
91	NCF150D	150	10		15mØ	50m	3 5	5.0m	100	1.2	10	500n	10	6.0u	25 §	125	100A	.50 †	TO48
92	2N1845	150	10 △	35C		150m$	3 5 $	6.5mØ	35C	2.5 †	10					125 *	100C	.5 †	TO48
93#	2SF273	150	10	63C	10mØ	30m	2.5	3.0mØ	100J	1.2	10					90	100J	5 Ø	S141b
94#	2SF273A	150	10	63C	10mØ	30m	2.5	3 0mØ	100J	1.2	10		10	15u⊘	100 △	90	100J	5 0 Ø	S141b
95	2N1845A	150	10 △	80C		150m$	3.7 $	6.5mØ	80C	2.5 †	10					125 *	125C	.5 †	TO48
96	2N1845B	150	13 △	80C		75m	3 7 $	1.0mØ	125C	1.8 †	13					150 *	125C	.5 †	TO48
97#	2SF74	150	15	25C		50m	3 0	6.5m	100C	1.2 △	7.0					100	100	5 Ø	S94
98#	BTY87/150R	150	15	61A	10mØ§	65m	3 5	13m	125J	3.0	50	3 0u§	10	15u	100	106	125J	.50	TO48
99#	SF10C11	150	16	26		80m	3 5	13m	100C	3.0	50					113	100J	500m	S18
100	2N684	150	16 △	65C		80m$	3 0 $	6.5mØ	125C	2.0 Ø	16					150 *	125C	.50	TO48
101	10RC15	150 ⊘	16 △	65C	10mØ	40m	3.0	6.5mØ	105C	2.3 †	31					125 △	105J	.50 †	TO48
102#	BTY91/150R	150	16	75B	10mØ§	40m	3.0	13m	125J	2.0	50	3.0u§	10	20u§	100	136	125J	5.0	TO48
103	C36G	150	16 △	100	20mØ	50m	3 5	6.5m	100J	1.2		4.5u⊘	10	20u		125	100B	.50	S18
104	16C15	150	16	125J	50m	15m	2.0	10m	125J	2.0	50	7.0u	16	75u§		150	125J	5.0 Ø	TO48#△
105	16C15B	150	16	125J	50m	40m	2.0	10m	125J	2.0	50	7.0u	16	75u§	25	150	125J	5.0 Ø	TO48#△
106	16C15C	150	16	125J	50m	40m	2.0	10m	125J	2.0	50	7.0u	16	75u§		150	125J	5.0 Ø	TO48#△
107	2N684A	150	18 △	65C	50m$⊘	40m	3.0 $	1.0mØ	65C	2.1 †	18				200	250 *	125C	.5 †	TO48
108#	2SF293	150	20	58C	10mØ	50m	3.5	3.0mØ	100	1 3	20					300	100J	5 Ø	S106b
109#	2SF293A	150	20	58C	10mØ	50m	3.5	3.0mØ	100	1 3	20		20	15u⊘	100 △	300	100	5.0 Ø	S106b
110	TCR152	150	22	25C$	25mØ§	50m	3 0	3 0mØ	100C	820mØ	20 §	7.5u		12u		150	125C	500m	S148

SYMBOLS AND CODES EXPLAINED IN INTERPRETER

6. SILICON CONTROLLED RECTIFIERS

IN ORDER OF (1) PEAK REV. VOLT., (2) MAX. CONT. CUR., (3) TEMPERATURE, (4) TYPE No.

LINE No	4 TYPE No	1 PRV and VBO (V)	MAX. CONT. CURRENT 2 Idc (A)	3 at TEMP (°C)	MAX. HOLD. CUR Ih @ 25°C (A)	MAX. GATE FIRING SPEC at 25°C Igf (A)	Vgf (V)	MAX SAT I Ir@PRV and Is@VBO (A)	at TEMP (°C)	MAX. FWD. VOLT. DROP at 25°C Vf (V)	@ If (A)	SWITCHING TIME at 25°C Ton (s)	for If (A)	Toff (s)	MIN. dV/dt @ 25°C (V/us)	ABS. MAX RATINGS 1Cy PK SURGE I@25°C (A)	MAX TEMP (°C)	MAX GATE POWER (W)	DWG. No.
1#	2SF134	150	25	25C		50m	3 0	6.5m	125C	1 2 △	12					150	125	5 Ø	S94
2	10RCF15A	150 ☑	25 △	45C	10mØ	90m	2 5	6.5mØ	125C	2.8	50 †	3.0u	10	12u§	25 §	200 △	125J	500m†	TO48
3#	SF16C11	150	25	57		40m	3.0	13m	125C	1.9	50					135	125J	500m	S18
4	C40G△	150	35 △	18B	100m	40m	3 0	10m△	25J	2.0 △	50			12u		150	125J	5 0	TO48
5	SCRF1615	150 ☑	35	25C	100m	40m	3.0	6 0m△	125C	2 0	50	2 0u§	10	12u§		200 §	125J	15	TO48
6	16RC15A	150 ☑	35 △	35C	20mØ	40m	2 0	6 5mØ	125C	2.3	70 †		10	75u§	25 §	250 △	125J	50 †	TO48
7	16RCF15A	150 ☑	35 △	35C	20mØ	40m	2 0	3 0mØ	125C	2 3	70 †		10	12u§	25 §	250 △	125	50 †	TO48
8	18RC15	150 ☑	35 △	45C	20mØ	40m	2.0	6.5mØ	125C	2 0	70 †					350 △	125J	.50 †	TO48
9	C38G△	150 ☑	35	56C	80m	40m	3.0	10m	25J	2.0 △	50	1 4u	5 0	24u	20	150	150C	12	TO48
10	22RC15	150 ☑	35 △	70C	20mØ	40m	2 0	6 5mØ	150C	2.3	70 †				20	225 △	150J	500m†	TO48
11	C38G☑	150	35	87C	80m	40m	2 5	5.0m	150J	2 0 †	50	1 4u	5 0	24u§	20	200	150J	.50 †	TO48
12	NLC38G	150	35	90C	80m	40m	2 5	5 0m	150J	2.0	50	1 4u	5.0	24u	20	200	150J	.50 †	TO48
13	35C15	150	35	125J	200m§	200m	3.0	10m	125J	2 5	220	10u	35	40u§		900	125J	15 Ø	TO94#△
14	35C15B	150	35	125J	200m§	200m	3 0	10m	125J	2.5	220	10u	35	40u§	100	900	125J	15 Ø	TO94#△
15	35C15BF	150	35	125J	200m§	200m	3 0	10m	125J	2 5	220	10u	35	40u§	100	900	125J	15 Ø	TO83#△
16	35C15F	150	35	125J	200m§	200m	3.0	10m	125J	2 5	220	10u	35	40u§		900	125J	15 Ø	TO83#△
17#	CR30-204AA	150	38	70C	20mØ	80m	3 0	10m†	125C	2 5	100	20u	100	20u☑	20	660	125	5.0 Ø	TO49
18#	CR30-204BA	150	38	70C	20mØ	80m	3.0	10m†	125C	2 5	100	20u	100	15u☑	20	660	125	5 0 Ø	TO49
19#	CR30-204CA	150	38	70C	20mØ	80m	3 0	10m†	125C	2.5	100	20u	100	12u☑	20	660	125	5 0 Ø	TO49
20#	BTY95/150R	150	50	75B	10mØ§	80m	3.0	13m	125J	3 3	500	3 0u	50	20u	10	680	125J	5 0	TO49
21#	5TC15	150	50	100J	20m	45m	3 0			1 3	50	5 0u	50	25u		500	100J	2.0	S185
22	C45G△	150	55 △	85C	100m	75m	3 0	10m	120C	3.1 △	500	5 0u	50	30u§	30 §	700	125J	500m	S315
23	C46G△	150	55 △	85C	100m	75m	3 0	10m	120C	3 1 △	500	5 0u	50	30u§	30 §	700	125J	500m	TO94
24	555G	150	55	99C		150m	3 0								200		125J		TO49
25	556G	150	55	99C		150m	3 0								200		125J		TO83
26	2515C	150	63	120C		10	3 0	15m	150J	1 7	50				300	1 2k	150J		TO83
27#	CR50-204AA	150	66	75C	32mØ	60m	3 0	10m†	125C	1.7	150	5 5u	150	20u☑	20	760	125	5 0 Ø	TO49
28#	CR50-204BA	150	66	75C	32mØ	60m	3 0	10m†	125C	1.7	150	5 5u	150	15u☑	20	760	125	5.0 Ø	TO49
29#	CR50-204CA	150	66	75C	32mØ	60m	3 0	10m†	125C	1 7	150	5.5	150	12u☑	20	760	125	5.0 Ø	TO49
30#	CR50-204DA	150	66	75C	32mØ	60m	3 0	10m†	125C	1 7	150	5.5	150	8 0u☑	20	760	125	5 0 Ø	TO49
31#	CR50-204LA	150	66	75C	32mØ	60m	3 0	10m†	125C	1.7	150	5.5u	150	25u☑	20	760	125	5 0 Ø	TO49
32	2N1912	150	70 △	62C		130m$	3 0 $	6.5mØ	62C	1.9 †	70					1.0k*	125C	50	TO49
33	2N2026	150	70 △	85C		150m$	3 0 $	6 5mØ	85C	1.9 †	70					1 0k*	150C	50	TO49
34#	BTY99/150R	150	70	85B	10mØ§	70m	3 0	13m	125J	2 5	500	3 0u	50	20u	10	900	125J	5 0	TO49
35	70C15	150	70	125J	200m§	200m	3.0	10m	125J	1 8	220	10u	70	40u§		1.6k	125J	15 Ø	TO94#△
36	70C15B	150	70	125J	200m§	150m	3 0	10m	125J	1 8	220	10u	70	40u§	10	1 6k	125J	15 Ø	TO94#△
37	70C15BF	150	70	125J	200m§	150m	3 0	10m	125J	1 8	220	10u	70	40u§	10	1.6k	125J	15 Ø	TO94△
38	70C15F	150	70	125J	200m§	200m	3 0	10m	125J	1 8	220	10u	70	40u§		1 6k	125J	15 Ø	TO83#△
39#	CR31-203A	150	80	55C	38mØ	60m	3 0	10m†	125C	1.7	100	3 7u	100	130u	20	700	135J	5 0 Ø	TO49
40#	CR31-204AA	150	80	55C	38mØ	60m	3 0	10m†	125C	1 7	100	5 7u	100	20u☑	20	700	135J	5.0 Ø	TO49
41#	CR31-204BA	150	80	55C	38mØ	60m	3 0	10m†	125C	1 7	100	5 7u	100	15u☑	20	700	135J	5 0 Ø	TO49
42#	CR31-204CA	150	80	55C	38mØ	60m	3 0	10m†	125C	1.7	100	5 7	100	12u☑	20	700	135J	5.0 Ø	TO49
43#	CR31-204DA	150	80	55C	38mØ	60m	3.0	10m†	125C	1 7	100	5 7u	100	8 0u☑	20	700	135J	5.0 Ø	TO49
44	TCR1550	150	80	70C	25mØ	50m	3 0	4 0mØ	100C	.75 Ø	50 §	4 5u		18u		1.0k	125C	1.0	S147
45	36RC15A	150 ☑	80 △	75C	20 Ø	700m	2 5	6 5mØ	125C	2 2 †	160					850 △	125J	2.0 †	TO94
46	36RCF15A	150 ☑	80 △	75C	20 Ø	700m	2 5	6 5mØ	125C	2 2 †	160		50	20 §		850 △	125J	2 0 †	TO94
47	37RC15A	150 ☑	80 △	75C	20 Ø	700m	2 5	6 5mØ	125C	2 2 †	160					850 △	125J	2 0 †	TO83
48	37RCF15A	150 ☑	80 △	75C	20 Ø	700m	2 5	6.5mØ	125C	2.2 †	160			20 §		850 △	125J	2.0 †	TO83
49	51RCG15	150 ☑	80 △	75C	100m	150m	2 5	15mØ	125C	2 5 †	160		50	20u	100 §	1 2k△	125J	3.0 †	TO94
50	52RCG15	150 ☑	80 △	75C	100m	150m	2 5	15mØ	125C	2 5 †	160			20u	100 §	1 2k△	125J	3 0 †	TO83
51#	CR70-201A	150 †	85	75C		100m	3 0	15m	25C	1 7	70				20	1 0k	125C	1 0	TO49
52#	CR70-201C	150	85	75C		100m	3 0	30m†	125C	1 7	210				20	1 0k	125	5 0	M376
53	100C15	150	100	125J	200m	200m	2 5	25m	125J	2 0	500	10u	100	40u§		2 0k	125J	10 Ø	TO93#△
54	100C15B	150	100	125J	200m	200m	2 5	25m	125J	2 0	500	10u	100	40u§	100	2 0k	125J	10 Ø	TO93#△
55#	CR51-203A	150	105	55C	38mØ	60m	3.0	10m†	125C	1.6	150	3 4u	120	185u	20	760	135J	5.0	TO49
56	C55G△	150	110 △	60C	100m	75m	3 0	10m	125J	2.5	500	5.0u	50	30u§	20 §	1 0k	125J	5 0	TO49
57	C56G△	150	110 △	60C	100m	75m	3 0	10m	125J	2 5	500	5 0u	50	30u§	20 §	1.0k	125J	5 0	S108
58	71RC15A	150 ☑	110 △	62C	20mØ	70m	2 5	6.5mØ	125J	1.9 †	220		50	30u§		1.0k△	125J	.5 †	TO94
59	71RCF15A	150 ☑	110 △	62C	20mØ	70m	2 5	6 5mØ	125J	1 9 †	220		50	20u§	25 △	1 0k△	125J	50 †	TO94
60	72RC15A	150 ☑	110 △	62C	20mØ	70m	2 5	6 5mØ	125J	1 9 †	220		50	30u§		1 0k△	125J	.5 †	TO83
61	72RCF15A	150 ☑	110 △	62C	20mØ	70m	2 5	6 5mØ	125J	1 9 †	220		50	20u§	25 △	1.0k	125J	50 †	TO83
62	71RCG15	150 ☑	110 △	75C	100m	150m	2 5	15mØ	125C	2 4 †	220		50	15u	100 §	1 4k△	125J	3 0 †	TO94
63	72RCG15	150 ☑	110 △	75C	100m	150m	2.5	15mØ	125C	2 4 †	220			15u	100 §	1.4k△	125J	3 0 †	TO83
64	71RC15B	150 ☑	110 △	85C	20mØ	70m	2 5	6.5mØ	150J	2 2 †	220		50	40u§		1 0k△	150J	5 †	TO94
65	72RC15B	150 ☑	110 △	85C	20mØ	70m	2 5	6 5mØ	150J	2 2 †	220		50	40u§		1 0k△	150J	.5 †	TO83
66	C62G△	150	110 △	87C	100m	75m	3 0	15m	145C	2 5 △	1 5k	5 0u	50	50u		1 0k	150J	500m	S315
67	C60G	150	110	100C	100m	70m	2 5	8 0m	125J	2 5 †	500	5 0u	50	50u§		1 6k	150J	5 †	TO49
68	C62G☑	150	110	100C	100m	70m	2 5	8 0m	125J	2 5 †	500	5 0u	50	50u§		1 6k	150J	.50 †	TO83
69	NLC62G	150	110	103C	10	70m	2 5	8 0m	150J	2 5	500	5 0u	50	50u		1.6k	150J	.50 †	TO83
70#	10TC15	150	110	125J	20m	60m	3 0			1 5	110	5 0u	110	25u		1 1k	125J	20	S185
71#	CR100-201C	150 △	124	80C		100m	3 0	15m	25C	1 7	100				20	1 2k	125C	1 0	M376
72#	CR100-201D	150	125	80C	30mØ	100m	3.0	30m†	125C	1 7	300			100	20	1.5k	125	5 0	TO49
73	2505C	150	125	95C		10	3 0	15m	150J	1.3	50				300	1 6k	150J		TO83
74	150C15	150	150	125J	200m	200m	2 5	25m	125J	1 7	500	10u	150	40u§		3 0k	125J	10 Ø	TO93#△
75	150C15B	150	150	125J	200m	200m	2 5	25m	125J	1 7	500	10u	150	40u§	100	3 0k	125J	10 Ø	TO93#△
76	101RC15	150 ☑	160 △	80C	50mØ	150m	2 5	10mØ	125J	1 7 †	314		150	25u§		2 0k△	125J	2 †	TO93
77#	CR153-203A	150	220	70C	35mØ	150m	3 5	30m†	125C	1.6	450				100	3.0k	125	5 0	M201
78#	20TC15	150	220	125	50m	100m	3 0			1.5	200	5 0u	200	30u		2 5k	125J	20	S183
79#	CR152-203A	150	230	70C	35mØ	150m	3 5	30m†	125C	1 5	450				100	3.1k	125	5 0	M201
80	151RC15	150 ☑	235 △	62C	50mØ	100m	2 5	10mØ	125J	1.7 †	471		150	25u§		3 0k△	125J	2 †	TO93
81	151RC15A	150 ☑	235 △	80C	50mØ	100m	2 5	10mØ	125J	1 4 †	471		150	40u§		3.5k△	125J	2 †	TO93
82	151RCF15A	150	235 △	80C	50mØ	100m	2 5	10mØ	125J	1.4 †	471	7 0u	50	30u§	10 △	3 5k△	125J	2 0 †	TO93
83▼	151RF15	150 ☑	235	80C	200m	200m	2 5	15m	125C	1.9 †	471		250	20u§	200 §	4.2k△	125J	3 0 †	TO93
84#	CR151-203A	150	240	70C	35mØ	150m	3 5	30m†	125C	1.4	450				100	3.3k	125	5.0	M201
85#	CR253-203A	150	320	40C	35mØ	150m	3 5	30m†	125C	1 6	450				100	3.5k	125	5 0 Ø	M201
86#	CR252-203A	150	336	50C	35mØ	150m	3 5	30m†	125C	1 5	450				100	3 6k	125	5 0 Ø	M201
87#	CR7K203A45	150	435	65C	55mØ	150m	3 5	50m	125J	1.8	1 0k	3 5u	600	180u	100	6 0k	125J	5.0 Ø	M308b
88#	CR7K203A4	150	460	65C	55mØ	150m	3 5	50m	125J	1 7	1 0k	3 5u	600	180u	100	6 4k	125J	5 0 Ø	M308b
89	C290G	150	470 △			150m	3 5										125A		S132
90	C291G△	150	470 △			150m	3 5										125A		S247a
91	6RW71CY	150	470	65C		250m	3 1	10mØ	125J	65 Ø	300				4 0	5 5k§	125	16	S132
92	C291G☑	150	470	66C	100m	150m	3 0	15m	125J	1 2 †	500	5 0u	5 0	100u§	100 §	5.5k	125J	3 0 †	
93#	CR7K203A35	150	480	65C	140m	150m	3 5	50m	125J	1 6	1.0k	3 5u	600	180u	100	6 9k	125J	5.0 Ø	M308b
94#	CS11G	160	.75	40C	12m	7 0m	25	1 0m†		2 2 †	2.4					20	100C	.05	TO5
95#	40T2	160	65	75B	200m	200m	25	10m†		2 1 †	200					1 1k	125B	1 0	M308
96	C40G☑	180	35	62C	10mØ	40m	2 5	5 0mØ	125J	2 0 †	50	1 4u	5.0	8 0u	200 §	150	125J	500m†	TO48
97	C45G☑	180	55	89C	100m	70m	3.0	8 0m	125J	3 0 †	500	5 0u	50	30u§	200 §	1.2k	125J	50 †	TO83
98	C46G☑	180	55	89C	100m	70m	3 0	8 0m	125J	3 0 †	500	5 0u	50	30u§	200 §	1 2k	125J	500m†	TO49
99	NL555G	180	55	89C	300m	150m	2.5	10m	125J	3 5 †	500	8 0u	50	100u§	200 §	1.2k	125J	2 †	TO49
100	NL556G	180	55	89C	300m	150m	2 5	10m	125J	3 5 †	500	8 0u	50	100u§	200 §	1 2k	125J	2 †	TO83
101	2N1794	180	70 △	65C		130m$	3 0 $	6 5mØ	65C	1 8 †	70					1.0k*	125C	.50 †	TO83
102	C55G☑	180	110	60C	100m	70m	2 5	8.0m	125J	2 5 †	500	5 0u	5 0	15u§	200 §	1 2k	125J	50 †	TO49
103	C56G☑	180	110	60C	100m	70m	2 5	8 0m	125J	2 5 †	500	5 0u	5 0	15u§	200 §	1.2k	125J	50 †	TO83
104	JAN2N2326	200			2 0m	35m	1 0	01m	25	2 2	4 0					15	125	.01	TO5
105	JAN2N2326A	200			2.0m	35m	1 0	.01m	25	2 2	4 0					15	125	01	TO5
106	2N4149	200			5 0m	1 0m	80									8.0 *§	110A	.2 Ø	C41d
107	C354B	200			500m	500m	4 0	15m	25C	3 0 †	500 †		50	7 0u§	200 §	1 2k	125J	2 0	M514
108	C355B	200			500m	500m	4 0	15m	25C	3 0 †	500 †		50	12u§	100 §	1.2k	125J	2 0	M514
109	C385B	200			500m	300m	3 0	10m	25C	2 8 †	1 5k†		250	15u§	200 §	3.5k	125J	2 0 †	M514
110	C506B	200			500m	220m	5 0	10m	25C				300	40u§	200 §	8.0k	125J	5 0 †	M464

SYMBOLS AND CODES EXPLAINED IN INTERPRETER

6. SILICON CONTROLLED RECTIFIERS

IN ORDER OF (1) PEAK REV. VOLT., (2) MAX. CONT. CUR., (3) TEMPERATURE, (4) TYPE No.

LINE No	4 TYPE No	1 PRV and VBO (V)	MAX. CONT. CURRENT 2 Idc (A)	3 at TEMP (°C)	MAX. HOLD. CUR Ih @ 25°C (A)	MAX. GATE FIRING SPEC at 25°C Igf (A)	Vgf (V)	MAX SAT I Ir@PRV and Is@VBO (A)	at TEMP (°C)	MAX. FWD. VOLT. DROP at 25°C Vf (V)	@ If (A)	SWITCHING TIME at 25°C Ton (s)	for If (A)	Toff (s)	MIN. dV/dt @ 25°C (V/us)	ABS. MAX. RATINGS 1Cy PK SURGE I@25°C (A)	MAX TEMP (°C)	MAX GATE POWER (W)	DWG. No.
1	C510B	200			500m	200m	5.0	10m	25C	2 2 †	500 §		300	12u§	200	4 0k	125J	2 0 †	M464
2	10RCV20	200		125	50m	45m	2 9	6 0m	125	2 3			135	10u	100	135	125	.50	TO48
3	2N5790	200	120m	75A	10m$	350u	1 2 $	200u	125A	1.2	240m					4 0	125A	10m†	TO106
4	C6206	200	20	75A	5 0m	200u	80	100u	100	1.5	.20						150		M185a
5	RTH0120	200	20	80C	5.0m	20m	1 0	10m	100	1.5	.20	20u	.20		100	5 0	100C		M443
6	RTH0220	200	20	80C	10m	1 0m	1 0	1.0m	125	2 5	.20	.20u	.20		100	5.0	125C		M443
7	RTH0320	200	20	80C	10m	20m	1 0	50m	125	1 5	.20	.20u	.20		100	5 0	125C		M443
8	RTH0420	200	20	80C	5.0m	10m	80	10m	125	1 5	.20	20u	.20		100	5.0	125C		M443
9	RTH0520	200	20	80C	3 0m	02m	80	02m	125	1.3	.20	.20u	.20		100	5 0	125C		M443
10	RTH0620	200	20	80C	2 0m	02m	.70	.02m	125	1.2	.20	.20u	20		100	5.0	125C		M443
11	2N5721	200	200m	90A	2 0m	20u	600m	100u	150A	1 4	400m			30u	100	5.0	150A	25m†	TO18
12	AA102	200	25	75	2 0m	2 0u	60	2 0u	25	1 5	1 0	1 0u	1.0	20u	50	15	150		TO18
13	AA109	200	25	75A	2 0m	02m	.60	2 0u	25A	1 5	1 0 †				50	15 §*	150A		TO18
14	AA116∅	200	25	75A	3 0m	200u	80	2.0u	25A		1 0 †				50	15 §*	150A		TO18
15	CB203	200	25	75		400u		5.0u	25		.50	1.0u	1 0	20u	50	5.0	150A		TO18
16	RTA0120	200	25	80A	5.0m	20m	1 0	.10m	100	1.5	.25	20u	.25		100	6.0	100A		TO46
17	RTB0120	200	25	80A	5 0m	200u	1 0	100u	100	1 5	25	200n	25		100	6.0	100A		TO52
18	RTB0220	200	.25	80A	10m	1 0m	1.0	1.0m	125	2.5	25	200n	.25		100	6.0	125A		TO52
19	RTB0320	200	25	80A	10m	20m	1 0	.50m	125	1.5	25	.20u	.25		100	6 0	125A		TO52
20	RTB0420	200	25	80A	5 0m	10m	80	10m	125	1 5	25	.20u	25		100	6.0	125A		TO52
21	RTB0520	200	25	80A	3 0m	02m	80	.02m	125	1.3	.25	.20u	25		100	6.0	125A		TO52
22	RTB0620	200	.25	80A	2 0m	02m	70	.02m	125	1 2	25	.20u	25		100	6.0	125A		TO52
23	RTC0120	200	.25	80A	5 0m	20m	1 0	.10m	100	1 5	20	.20u	25		100	6 0	100A		TO18
24	RTC0220	200	25	80A	10m	1 0m	1.0	1.0m	125	2 5	25	.20u	.25		100	6.0	125A		TO18
25	RTC0320	200	25	80A	10m	20m	1.0	50m	125	1 5	.25	20u	.25		100	6 0	125A		TO18
26	RTC0420	200	25	80A	5 0m	10m	80	10m	125	1.5	.25	20u	.25		100	6.0	125A		TO18
27	RTC0520	200	25	80A	3.0m	02m	80	.02m	125	1.3	25	20u	25		100	6 0	125A		TO18
28	RTC0620	200	25	80A	2 0m	02m	70	.02m	125	1 2	25	.20u	25		100	6.0	125A		TO18
29	2N5064	200	255m	102C	10m$	350u$	1 2 $	50u	125C	1 7	1 2					6 0	125C	10m†	TO92
30#	64T4	200	26 △	25A	3 0m	20m	.80	05m	100J	1 1	.20					5 0 *	100J		TO46
31	2N951	200 †	26	125C	1.0m	02m	1 0	02m	125C	2.0	20					1 0 §	150C	.02	TO18
32	2N889A	200	275	25	1 0m	50u	.60	20u	125	1 5	.20	1 2u	20	3 2u		1.0	150A		TO18
33	2N2686	200 △	28	55A	1 0m	20u	80	20u△	125A	1.2	.20				200	2 0 §	125A		TO18
34	2N2686A	200	28	55A	1.0m	20u	80	1 0u	25	1 2	.20	300n∅	.20	10u∅	200	2 0 §	125A	50m†	TO18
35	2N2690	200 △	28	55A	2 0m	20m	1 0	10m△	125A	1 5	.20					2 0 §	125A		TO18
36▼#	2SF1112	200 ∅	300m	25A		1 0m	800m	100u	100J	1 2	600m					10 △	100J	100m∅	C123
37#	CR02AM4	200 ∅	300m	25A		1.0m	800m	100u	100J	1.2	600m					10 △	100J	100m∅	C123
38	TIC47	200 ∅	30	25A	5 0m	20m	.80	05m	125A	1 4	.30	3.5u		6.8u		6 0	125A		M367
39#	SF0R2D41	200	300m	30A	5 0m	200u	800m	100u	100J	2.0	2 0					6.0	100J	100m	C117
40	2N2682	200 △	35	55A	2.0m$	100u$	90 $	100u△	150A	1 2	.20				200	2.0 §	150A		TO18
41	2N2682A	200	35	55A	500u	20u	70	100n	25	1 2	20	300n∅	20	10u∅	200	2.0 §	150A	50m†	TO18
42	2N3004	200 △	35	55A	3 0m	.02m	.70	.10m	150A	1.2	35					6.0 §*	150A	10	TO18
43	2N3008	200 △	35	55A	5 0m	.20m	80	10m	150A	1 2	35					6 0 §*	150A	10	TO18
44	2N881	200 †	35	100C	5 0m	20m	80	10m△	125C	1.5	20					20 *§	150C		TO18
45	2N889	200 †	.35	100C	1.0m	02m	.60	.02m△	125C	1.5	20					20 *§	150C		TO18
46	3F200	200	35	100	10m	2.0m	1 5	01m	25	1.5	.20	.40u	50	10u		5 0	150		TO18
47	HR881A	200	35	100	5 0m	20m	80	01m	25	1.5	1 0	10u	50	.50u		5 0	150		TO18
48	HR881B	200	35	100	3.0m	02m	60	01m	25	1.5	1 0	10u	.50	.50u		5 0	150		TO18
49#	2SF104	200 ∅	38	25A		.50m	1 0	.10m	100J	2 5	4 0					15	100J	01	TO5
50#	2SF658	200 ∅	38	25A	4.0m∅	1 0m	80	.10m	100J	2.5	4 0					8 0	100J	.01	
51	2N4336	200	.39	25	1 0m	01m	80			1.5	.80			10u		8 0	125A	.02	TO52
52	2N5726	200	390m	90A	2 0m	20u	600m	200u	150A	1.5	780m			30u	100	8 0	150A	25m†	TO5
53#	2SF523	200 ∅	.40	25A	2 0m∅	3 0m	1 0	.40m∅	125J	1 2	1.0					20	125J	1 ∅	TO5
54♦#	CR05A4	200 ∅	400m	25A		3 0m	1.0	400u	125J	1.2	1.0					20 △	125J	100m∅	TO5
55♦	C107B2	200	400m	32A$	3 0m	500u	800m	100u	110	2 5	4 0	1 2u	1.0	40u	8.0 ∅	15	110J	500m	M626
56♦	C107B4	200	400m	32A$	3 0m	500u	800m	100u	110	2 5	4 0	1 2u	1 0	40u	8.0 ∅	15	110J	500m	M628
57	JAN2N1874A	200 ∅	400m	50A	5 0m	200u	800m	100u	125A	2 5	2.0					15	150A		T09
58	AD102	200	45	75A	2 0m	2u	60	2.0u	25A	1.5	1.0 †				50	15 §*	150A		TO5
59	AD109	200	45	75	2 0m	.02m	60	2 0u	25	1 5	1 0	1 0u	1 0	20u	50	15	150		TO5
60	AD116	200	45	75	3 0m	.20m	80	2 0u	25	1 5	1.0	1 0u	1.0	20u	50	15	150		TO5
61	CD203	200	.45	75	3 0m	400u	.60	5.0u		1.4	1 0	1 0u	1.0	20u	50	15	150A		TO5
62▼	S2001K	200	500m	80C	10m	10m	1 5	1 0m	100C	1 6	3.0	1 5u	2.0	25u§	30 §	50 §	125A	500m†	M506
63	3C6200	200	50	100C	50m	10m	2 0		125C	2 0	.20						125A		T09
64	ID104	200	500m	100	5 0m	200u	800m	50u	125	1.7	1 0	1.5u	1.0	10u		6.0	125		TO18
65	RTJ0220	200	510m	55C	10m	1 0m	1 0	1.0m	125	2 5	250m†				100	6 0	150S	10m†	TO92
66	RTJ0520	200	510m	55C	3.0m	20u	800m	20u	125	1 3	250m†				100	6.0	150S	10m†	TO92
67#	TD2001J	200	600m	25A	40m∅	20m	3 0	1 0m	125J	2.0	1 0	1.5u§	500m	15u§	50 ∅§	12		60m	C16e
68#	TDH2	200	600m	25A	5 0m	300u	3 0	1.0m	125J	2.0	1 0	1.5u§	500m	60u§	10 ∅§	12		900u	C16e
69#	TDRA2	200	600m	25A	20m∅	10m	3 0	1 0m	125J	2.0	1 0	1.5u§	500m	20u§	50 ∅§	12		30m	C16e
70#	CS0 6-02	200	650m		20m	10m	3.0			1 4	2 0			60u	200	35	125	10	
71#	CS11H	200	75	40C	12m	7 0m	.25	.90m†		2 2 †	2 4					20	100C	.05	TO5
72	2N1933	200	.75	55A$	80m$	30m$	2.0 $	55m∅	125A	1 4 $	.75					30 §	125A	10	M77
73♦	C107B1	200	800m	20A$	3 0m	500u	800m	100u	110	2.5	4 0	1 2u	1 0	40u	8 0 ∅	15	110J	500m	M627
74♦	C107B3	200	800m	20A$	3 0m	500u	800m	100u	110	2.5	4.0	1 2u	1.0	40u	8 0 ∅	15	110J	500m	M625
75	C103B	200	800m△	25J	5.0m	200u	800m	1 0u	25C	1 5 †	1 0			15u	20 ∅	8.0	125J	10m†	M367a
76	3A3200	200	.80	100	50m	10m	2.0	01m	25	2 5	50	.50u	.50	5.0u		5 0	150		T09
77	3A3200A	200	80	100	50m	10m	2.0	.01m	25	2 5	.50	50u	.50	2 0u		5 0	150		T09
78▼	HEPR1005-RT	200	800m	100J	5.0m∅§	200u§										6 0 §	125		TO92
79	MCR120	200 △	800m△	110C	5.0m	200u	800m	100u	110C	1 7	1.0 †					6.0 *	110J	10m†	TO92
80#	T0 8N2A00	200	.90	85C	20m	10m	3 0			1.2	1.0	2 0u	1.0	15u	15	19	125J	1 ∅	TO5
81#	CS1-02	200	1 0		50m	30m	3.0	1 0m	125	1 4	4.0			60u	100	55	125	10	
82	2N4098	200 △	1 0	25C	2 0m	20m	80	.02m△	125C	1 6	.50	1 5u	.20	15u	75	4 0 *	125J	.1 †	TO46
83	2N4110	200 △	1 0	25C	2 0m	.20m	80	02m△	125C	1 6	.50	1.5u	.20	15u	75	4.0 *	125C	.1 †	TO18
84#	TD2001	200	1 0	25C	1.0m∅	2.5m	5 0	1.0m	100J	2.0	.75	1.5u	.60	20u		12	100A	.01	TO5
85#	TD2001S	200	1 0	25C	30m∅	.30m	5 0	1.0m	100J	2.0	.75	1.5u	.60	40u		12	100A	.01	TO5
86#	TDR2	200	1 0	25A	30m∅	20m	3 0	1.0m	125J	2.0	1 0	1.5u§	500m	20u§	50 ∅§	12		60m	C16e
87#	T 75F200	200	1 0	60	20m	25m	2.5	1.0m	90J	2.0	1 0	2.0u	.40	20u	20	15	45A	.20	TO5
88#	TAG1-200	200	1 0	70C	25m	10m	2 0	1.0m	105	2.0	2 0					15	105J	30m†	TO5
89#	TAG2-200	200	1 0	70C	5 0m	1 0m	2 0	1.0m	105	2.0	2 0					15	105	30m†	TO5
90	2N1597	200	1 0	80C		10m	3 0	1 0m	125C	2.0 §	1 0					15 §	125C		TO5
91	B03403	200	1.0	80C	10m	10m	1 5	1 5m	100C	1.6		1.5u	2 0	25u	30 §	50 §		500m†	M506
92	B04303	200	1 0	80C	10m	10m	1 5	1 5m	100C	1.6		1.5u	2.0	25u	30 §	50 §		500m†	C16aa
93	RTD0120	200	1 0	80C	5.0m	20m	1.0	10m	100	1.5	1.0	.20u	1.0		100	15	100C		TO5
94	RTD0220	200	1 0	80C	10m	1 0m	1 0	1 0m	125	2.5	1.0	.20u	1.0		100	15	125C		TO5
95	RTD0320	200	1 0	80C	10m	20m	1 0	50m	125	1 5	1 0	.20u	1 0		100	15	125C		TO5
96	RTD0420	200	1 0	80C	5 0m	10m	80	.10m	125	1.4	1 0	.20u	1.0		100	15	125C		TO5
97	RTD0520	200	1 0	80C	3 0m	.02m	80	.02m	125	1 4	1.0	20u	1.0		100	15	125C		TO5
98	RTD0620	200	1 0	80C	2 0m	02m	70	02m	125	1 3	1.0	.20u	1.0		100	15	125C		TO5
99	RTF0120	200	1.0	80C	5.0m	20m	1 0	.10m	100	1.5	1.0	.20u	1.0		100	15	100C		TO5
100	RTF0220	200	1 0	80C	10m	1 0m	1.0	1.0m	125	2.5	1.0	20u	1.0		100	15	100C		TO5
101	RTF0320	200	1 0	80C	10m	20m	1.0	.50m	125	1 5	1.0	20u	1 0		100	15	125C		TO5
102	RTF0420	200	1 0	80C	5 0m	10m	.80	10m	125	1.4	1.0	.20u	1.0		100	15	125C		TO5
103	RTF0520	200	1 0	80C	3.0m	02m	80	02m	125	1 3	1.0	20u	1 0		100	15	125C		TO5
104	RTF0620	200	1 0	80C	2.0m	.02m	70	.02m	125	1 3	1.0	.20u	1 0		100	15	125C		TO5
105▼	S2001J	200	1.0	80C	10m	10m	1 5	1.0m	100C	1.6	7 0	1 5u	2.0	25u§	30 §	50 §	125A	500m†	M506
106▼	S2001M	200	1.0	80C	10m	10m	1 5	1 0m	100C	1.6	7.0	1.5u	2 0	25u§	30 §	50 §	125A	500m†	C16aa
107	2N4216	200	1 0	85	7 0m	300u	1 0	200u	125	2 0 †	3 1					15 §*	125A	.10 ∅	TO5
108#	T1N200	200	1 0	85C	25m	10m	2 0	1.0m	125J	1.9	2 0	5.0u	1 0	25u	10 §	15	125J	400m	TO5
109	2N1885	200	1 0	100C		2 0m	2 0	20m	125C	2.0	1.0					20 *§	150C		T09
110	3B200S	200	1 0	100		2 0m	2 0	01m	25	2.5	2 0	1.2u	.50	10u		6.0	150		S135

SYMBOLS AND CODES EXPLAINED IN INTERPRETER

6. SILICON CONTROLLED RECTIFIERS

IN ORDER OF (1) PEAK REV. VOLT., (2) MAX. CONT. CUR., (3) TEMPERATURE, (4) TYPE No.

LINE No	4 TYPE No	1 PRV and VBO (V)	MAX. CONT. CURRENT 2 Idc (A)	3 at TEMP (°C)	MAX. HOLD. CUR Ih @ 25°C (A)	MAX. GATE FIRING SPEC at 25°C Igf (A)	Vgf (V)	MAX SAT I Ir@PRV and Is@VBO (A)	at TEMP (°C)	MAX. FWD VOLT. DROP at 25°C Vf (V)	@ If (A)	SWITCHING TIME at 25°C Ton (s)	for If (A)	Toff (s)	MIN. dV/dt @ 25°C (V/us)	ABS. MAX. RATINGS 1Cy PK SURGE I@25°C (A)	MAX TEMP (°C)	MAX GATE POWER (W)	DWG. No.
1	C9B	200	1 1	18A	20m	8 0m	2 0	1.1mØ	125J	1.1 Ø	1 1			12u		30 §	125J	5 0	M77
2	SCR12A	200 ⊠	1 1	25C	20m	15m	2 0	1.1m△	125C	1 2 △	1 0	1 0u§	30	20u§		60 §	125J	5 0	A130
3	SCRF12A	200 ⊠	1 1	25C	50m	15m	2 0	1.0m△	125C	1.2 △	1 0	2 0u§	1 0	6.0u§		60 §	125J	5 0	A130
4#	BStB0113	200	1 2	45A		15m	3 0		115J						100 §	34	115J		M477
5	2N1874	200	1 25	100C	5 0m	20m	80	10m△	125C	2 5	2 0					20 §*	150C		TO9
6	2N1874A	200	1 25	100C	5 0m	20m	80	10m	125C	2 5	2 0					20 §*	150C		TO9
7	2N1880	200	1 25	100C	3 0m	02m	60	10mt△	125C	2.5	2 0					20 *§	150C		TO9
8	2N1880A	200	1 25	100	3 0m	20u	60	5 0u	25	2 5	2 0	100n	50	500n		5.0	150		TO9
9	FT1874	200 △	1 25	100C	5 0m	20m	80	.10m△	125C	2.5 †	2 0				150 Ø	20 *§	150J		TO5
10	FT1885	200 △	1 25	100C	2 0m	2 0m	2 0	20m	125C	2 0 †	1 0				150 Ø	20 *§	120J		TO5
11	2N3528	200	1.3	25		15m	2 0									60	100A	5 Ø	Z25
12#	1RC20	200	1.3	75B	20m	18m	2 1	4 5m	100	1 7	1 3			15u	10	60	100	50	TO8
13	2N2012	200 †	1 3	80C	5 0m§	20m	1 0	10mt	125C	1 2	1 0					15 §	150C	05	TO5
14	FT2012	200 △	1 3	80C	5 0m§	20m	1 0	10m	125C	2 0	1 0					15 §*	150J	05	TO5
15#	GCO2001	200	1.4	25A	50mØ	25m	3 0	1 0m		2 0	1 0					3 0	100C	5 0	TO5
16	B03001	200	1 4	60C	6 0m	50u	1 0	100u	100C	1 6		1 5u	2.0	35u	4 0 §	50 §	125J	500mt	M506
17	B03002	200	1 4	60C	6 0m	200u	1 0	100u	100C	1 6		1 5u	2 0	30u	4 0 §	50 §	125J	500mt	M506
18	B03003	200	1 4	60C	6 0m	1 5m	1 0	100u	100C	1 6		1 5u	2 0	20u	10 §	50 §	125J	500mt	M506
19	B04001	200	1 4	60C	6 0m	50u	1 0	100u	100C	1 6		1 5u	2 0	35u	4 0 §	50 §	125J	500mt	C16aa
20	B04002	200	1 4	60C	6 0m	200u	1 0	100u	100C	1 6		1 5u	2 0	30u	4 0 §	50 §	125J	500mt	C16aa
21	B04003	200	1 4	60C	6.0m	1 5m	1.0	100u	100C	1.6		1 5u	2 0	20u	10 §	50 §	125J	500mt	C16aa
22▼	40811	200	1 5	75C	20m	15m	2 0			3 5	30	2 0u⊠	4 5		10 §	40	100C	10	C16ac
23#	14T4	200	1 6 △	25C	1.5mØ	10m	3 0	25m△	25J	2 0	1.0			20u		15	100J		TO5
24#	CR1-201C	200 †	1 6	25C	1 9m	10m	3 0	1 0m	100J	2.0	1 0	1 4u	1 0			15	100A	10	TO5
25	2N2348	200	1 6	55C	1 0m$	07m$	1.0 $	10m△	100C	1 5 §	1 6					15 §	100C	01	TO5
26	TI145A2	200	1 6	60C	25m	25m	3 5			2 0	1 0					30	105C	30	TO5
27#	SF1D11A	200	1 6	62C	10m	1 0m	800m	100u	100J	3 4	10					17	150	100m	TO5
28	MCR914-4	200 ⊠	1 6	65C		8 0m	2 0	1 0m△	125J	1 4 △	1 0	70u	1 0	10u		15 △	125J	1.0	TO5
29#	BTX30-200	200	1 6	70C	25m	10m	2.0	1 0m	125	1 9	2 0					15	125J	30mt	TO5
30♦	ID203	200	1 6	70C	3 0m	200u	800m	100u	110	2 2	4 0	1 0	1 0	40u	20 Ø	15	110A		TO39
31♦	ID604	200	1 6	70C	3 0m	200u	800m	100u	110	2 5	4 0	1 0	1 0	40u	20 Ø	15	110A		TO39
32	2N2326	200	1 6	85C	3 0m$	350u$	1 0 $	100u△	125C	1 5 §	1 6					15 §	125C	10m	TO5
33	2N2326A	200	1 6	85C	3 0m$	07m$	90 $	10m	125C	1 5 §	1 6					15 §	125C	01	TO5
34	C6215	200	1 6	85C	2 0m	200u	80	100u	125	1 5	1 6						150		M185b
35	C6B	200 Ø	1 6 △	87C	5 0m	1 0m	80	01m	25J	1 4 △	1 0	1 4u	1 0	40u		10 △	125J	10	TO5
36#	SF1D11	200	1 6	89C	10m	1 0m	800m	100m	125C	3 4	10					17	125	100m	
37	2N3558	200	1 6	100C	3 0m	02m	70	10m	150	1 4	1 6					18	150J	10	TO5
38	2N3562	200	1 6	100C	5 0m	20m	80	10m	150	1 4	1 6					18	150J	.10	TO5
39	MCR1906-4	200 △	1 6	100J	5 0m	1 0m	1 0	500u	100J	1 7	1 0					15	100J	10mt	TO5
40	C511B	200 Ø	1 6	104C	2 0m	20m	80	01m	25J	2 2 △	4 0					15 §	125J	.10	M181a
41	C611B	200 Ø	1 6 △	104C	5 0m	1 0m	80	01m	25J	1 4 △	1 0	1 4u	1 0	40u		10 △	125J	10	M181a
42	2N1597A	200	1 6	110C	5 0m	2 0m	3 0	1 0m	125J	2 0	1 0					15 *	150J	10	TO5
43	SCRFL20	200 ⊠	1 7	80C	50m	15m	2 0	1 1m	125C	1 2 △	1.0	2 0u§	1 0	12u§		60 §	125C	5.0	A130
44	B01410	200	1 9	80C	10m	10m	1 5	1 5m	100C	1 6		1 5u	2 0	25u	20 §	50 §		500mt	M507
45	B04310	200	1 9	80C	10m	10m	1 5	1 5m	100C	1 6		1 5u	2 0	25u	30 §	50 §		500mt	C16aa
46▼	S2003L	200	1 9	80C	10m	10m	1 5	1 0m	100C	1 6	12	1 5u	2 0	25u§	30 §	50 §	125A	500mt	M507
47▼	S2003M	200	1 9	80C	10m	10m	1 5	1 0m	100C	1 6	12	1 5u	2 0	25u§	30 §	50 §	125A	500mt	C16aa
48♦#	CR2AM4	200 Ø	2 0	60C		3 0m	1 0	100u	100J	1 8	4 0					20 △	100J	500mØ	M488a
49#	SM2D41	200	2 0	70C	50m	75m	3 0	1 0m	110J	2 6	6 0					12	110J	3.0	M488
50#	SF1R3D41	200	2 0	80C	10m	200u	800m	200u	110J	2 0	10					20	110J	100m	M488
51	MCR846-4	200	2 0	105J	25mØ	50m	1 5	2 0m	105J	1 6	2 0	50u	2 0	4 0u	50 §	30	105J	5 Ø	S258
52	2N3274	200 Ø	2 2	85C	2 0m	200u	80	200u△	150	1 8	2 2	3 0u⊠	5 0	22u⊠	1 0k§	15 §	150C	10	TO5
53♦	C106B2	200	2 4	20C$	3 0m	200u	800m	100u	110	2 2	4 0	1 2	1 0	40u	8 0 Ø	20	110	500m	M626
54♦	C106B4	200	2 4	20C$	3 0m	200u	800m	100u	110	2 2	4 0	1 2	1 0	40u	8 0 Ø	20	110	500m	M628
55#	TM2004	200	2 5	25A	30mØ	25m	3 0	3 0m	110J	2 0	8 0	2 0u§	1 0	60u§	50 Ø§	50		75m	S141d
56	UCR20L	200 △	2 5	25A	50m	50m				1 2	3 0	500n	30	15u	250	60	125J	3 0 ⊠	A253
57	B01021	200	2 7	60C	6 0m	50u	1 0	100u	100C	1 6		1 5u	2 0	35u	4 0 §	50 §	125J	500mt	M507
58	B01022	200	2 7	60C	6 0m	200u	1 0	100u	100C	1 6		1 5u	2 0	30u	4 0 §	50 §	125J	500mt	M507
59	B01023	200	2 7	60C	6 0m	1 5m	1 0	100u	100C	1 6		1 5u	2 0	20u	10 §	50 §	125J	500mt	M507
60	B04021	200	2 7	60C	6 0m	50u	1 0	100u	100C	1 6		1 5u	2 0	35u	4 0 §	50 §	125J	500mt	C16aa
61	B04022	200	2 7	60C	6 0m	200u	1 0	100u	100C	1 6		1 5u	2 0	30u	4 0 §	50 §	125J	500mt	C16aa
62	B04023	200	2 7	60C	6 0m	1 5m	1 0	100u	100C	1.6		1 5u	2 0	20u	10 §	50 §	125J	500mt	C16aa
63	NCM200C	200	3 0	$	15mØ	30m	1 5	2 0m	100J	1.5	5 0	1 0u⊠		10u⊠	25 §		100	20 Ø	S17
64#	2SF530	200	3 0	40C	5 0mØ	20m	2 0	1 5mØ	125J	1.2	3 0					50	125J	1 Ø	C63a
65	RTR0120	200	3.0	65C	100m	50m	3 0	2.0m	100	2 5	10	.20u	3 0		100	40	100C		TO66
66	C15B	200	3 0	75C	30m	25m	2 5	6.0m	105J	1 8	15					60	105J	50	TO64
67	NCR200B	200	3 0	80B$		25m	2 5	1 0m	125C	2 0 §	1 0					25 §	100A		S17
68	RTN0120	200	3.0	80C	100m	50m	3 0	2 0m	100	2 5	10	20u	3 0		100	40	100C		TO64
69	RTS0120	200	3 0	80C	100m	50m	3 0	2 0m	100	2 5	10	20u	3 0		100	40	100C		M94
70	3B3200	200	3 0	85C	10m	20m	80	01m	25	1.8	3 0				50	15	150C		S223
71#	CR3D4	200 Ø	3 0	95C	5 0mØ	20m	2 0	1 5m	125J	1 2	3.0					50 △	125J	1 0 Ø	C63a
72#	2SF940	200	3 1	77	10mØ	3 0m	840m	1 0m	110J	1 7	6 0				20	20	110J	100mt	TO66
73#	2SF1060	200	3 1	77C	10mØ	3 0m	840m	1 0m	110J	1 7	6 0					20	110J	100mt	TO66
74	40553	200	3 2	60C	50m	40m	3 5	1 5mt	100C						100 §	80	100C	50	TO66
75	2N3228	200	3 2	75	12mØ	15m	2 0			2 8	30					60	100	5 Ø	Z26
76	40504	200	3.2	75C	10mØ	15m	2 0	1 5m	100C	2 8	30	15u§	2 0		10 §	60	100C	13	M394
77	B01417	200	3 8	80C	20m	15m	1 5	1 5m	100C	1 6		1 5u	2 0	25u	30 §	100 §		500mt	M507
78	B05417	200	3 8	80C	20m	15m	1 5	1 5m	100C	1 6		1 5u	2 0	25u	30 §	100 §		500mt	S307
79	B18034	200	3 8	80C	20m	15m	1 5	1 5m	100C	1 6		1.5u	2 0	25u	30 §	100 §		500mt	
80	B19034	200	3 8	80C	20m	15m	1 5	1 5m	100C	1 6		1 5u	2 0	25u	30 §	100 §		500mt	
81▼	S2006B	200	3 8	80C	20m	15m	1 5	1 0m	100C	1 6	24	1 5u	2.0	25u§	30 §	100 §	125A	500mt	S307
82▼	S2006G	200	3 8	80C	20m	15m	1 5	1 0m	100C	1 6	24	1 5u	2 0	25u§	30 §	100 §	125A	500mt	M605
83▼	S2006H	200	3 8	80C	20m	15m	1.5	1.0m	100C	1 6	24	1 5u	2 0	25u§	30 §	100 §	125A	500mt	S361
84▼	S2006L	200	3 8	80C	20m	15m	1 5	1 0m	100C	1 6	24	1 5u	2 0	25u§	30 §	100 §	125A	500mt	M507
85♦	C106B	200	4 0		3 0m	200u	800m	10u	25	2 2	4 0 †	1 2	1 0	100u	8 0 Ø	20	110A	200mt	
86	MCR106-4	200 △	4 0 △		5 0m	500u	1 0	200u	110J	2.0	4 0 †				10 Ø§	25 *§	110J	100mt	M386a
87♦	C106B1	200	4.0	20C	3 0m	200u	800m	100u	110	2 2	4 0	1 2	1 0	40u	8 0 Ø	20	110	500m	M627
88♦	C106B3	200	4 0	20C	3 0m	200u	800m	100u	110	2.2	4 0	1 2	1 0	40u	8 0 Ø	20	110	500m	M625
89♦	IR106B1	200 Ø	4 0	20C	3 0m	200u	800m	100u	110J	2.8 †	8 0	1 2u	1.0	40u	8 0 Ø△	25 △	110J	100mt	Y202a
90♦	IR106B2	200 Ø	4 0	20C	3.0m	200u	800m	100u	110J	2 8 †	8.0	1 2u	1.0	40u	8.0 Ø△	25 △	110J	100mt	M626a
91♦	IR106B3	200 Ø	4 0	20C	3 0m	200u	800m	100u	110J	2 8 †	8.0	1 2u	1.0	40u	8 0 Ø△	25 △	110J	100mt	M625
92♦	IR106B4	200 Ø	4 0	20C	3 0m	200u	800m	100u	110J	2 8 †	8 0	1 2u	1 0	40u	8 0 Ø△	25 △	110J	100mt	M628a
93▼	IR106B41	200 Ø	4 0	20C	3 0m	200u	800m	100u	110J	2 8 †	8 0	1.2u	1 0	40u	8 0 Ø△	25 △	110J	100mt	M629
94	TC106B1	200	4 0 △	75C	3 0m	200u	800m	10u	25	2.2	4.0 †	1 0u	1 0	100u	100	20	150S	100mt	M627
95	TC106B2	200	4.0 △	75C	3 0m	200u	800m	10u	25	2 2	4.0 †	1 0u	1 0	100u	100	20	150S	100mt	M626
96	TC106B3	200	4 0 △	75C	3 0m	200u	800m	10u	25	2 2	4 0 †	1 0u	1 0	100u	100	20	150S	100mt	M625
97	TC106B4	200	4 0 △	75C	3 0m	200u	800m	10u	25	2 2	4 0 †	1 0u	1 0	100u	100	20	150S	100mt	M628
98	2N1602	200	4 0	80C		10m	3 0	1 0m	125C	2 0 §	1.0					25 §	125C		TO64
99	SCR32A	200 ⊠	4 0	80C	25m	15m	2 0	1 0m△	125C	2 0 △	3 0	1 0u⊠	60			60 §	125J	5.0	S62
100	SCRF32A	200 ⊠	4 0	80C	50m	15m	2 0	1 0m△	125C	2 0 △	3 0	2 0u§	1 0	6 0u§		60 §	125J	5.0	S62
101	MCR407-4	200 △	4 0 △	93C	5 0m	500u	1 0	100u	100J	2.6	4 0				10 Ø§	20 △*	110J	500mØ	M386
102	MCR406-4	200 △	4 0 △	97C	3 0m	200u	800m	100u	110J	2 2	4 0				10 Ø§	30 △*	110J	500mØ	M386
103#	T3N2C00	200	4 0	100B	25m	20m	3 0			1 2	3 0	2 0u	3 0	17u	15	55	125J	2 Ø	S62
104	3TCRE	200 ⊠	4 2	60B	50m	50m	3 0	3.0mØ	125J	1 4 Ø	3 0 §	2 0u	3 0	30u		40 *	150S	5 Ø	S56
105	SE9222	200 △	4 25	55C	4 0m	40m	80	1 5mt△	125C	2 6	6 0	.80u	50	15u	50	30 *§	125C	25 †	C63d
106#	TM2007	200	4 5	25A	40mØ	40m	3 0	3 0m	110J	2 0	15	2 0u§	6 0	50u§	50 Ø§	80		120m	S141d
107#	TM2007S	200	4 5	25A	50mØ	40m	3 0	3 0m	110J	2 5	15	2 0u		15u	100 §	80		120m	S141d
108#	TRA72	200	4 5	25A	40mØ	40m	3 0	3 0m	110J	2 0	15	2 0u§	6 0	40u§	50 Ø§	80		120m	M94g
109#	TRA72D	200	4 5	25A	40mØ	40m	3 0	3 0m	110J	2 0	15	2 0u§	6 0	40u§	50 Ø§	80		120m	S131
110	40378	200	4 5	60C	12mØ	15m	2 0	500u	100C	2 5	30				10	80	100C	20 †	C41b

SYMBOLS AND CODES EXPLAINED IN INTERPRETER

6. SILICON CONTROLLED RECTIFIERS

IN ORDER OF (1) PEAK REV. VOLT., (2) MAX. CONT. CUR., (3) TEMPERATURE, (4) TYPE No.

LINE No	4 TYPE No.	1 PRV and VBO (V)	MAX. CONT. CURRENT 2 Idc (A)	3 at TEMP (°C)	MAX. HOLD. CUR Ih @ 25°C (A)	MAX GATE FIRING SPEC at 25°C Igf (A)	Vgf (V)	MAX SAT I Ir@PRV and Is@VBO (A)	at TEMP (°C)	MAX. FWD. VOLT. DROP at 25°C Vf (V)	@ If (A)	SWITCHING TIME at 25°C Ton (s)	for If (A)	Toff (s)	MIN. dV/dt @ 25°C (V/us)	ABS. MAX. RATINGS 1Cy PK SURGE I@25°C (A)	MAX TEMP (°C)	MAX GATE POWER (W)	DWG. No.
1	40507	200	4 5	60C	12mØ	15m	2 0	1 0m	100C	2 5	30				10 §	80	100C	13	M395
2	2N1774	200	4 7 △	60C		30m$	2 0 $	6 0mØ	125C	1 9 †	4.7					60 *	125C	.50	TO64
3#	BStB0213	200	4 7	63		15m	3 0		115J						100 §	34	115J		M478
4	3RC20	200 ⊠	4 7 △	92C	5 0mØ	15m	2 0	3 0m	105C	2 0	9 4 †					30 △	105J	.50 †	TO64
5	2N1774A	200	4 7 △	105C	80m$⊠	30m$	2 0 $	6 0mØ	150C	1.9 †	4 7					60 *	150C	.50	TO64
6	3RC20A	200 ⊠	4 7 △	105C	5 0mØ	15m	3 0	6.0m	125C	2.0	9 4 †					40 △	125J	.50 †	TO64
7	RTR0220	200	5 0	65C	100m	50m	3 0	2 0m	100	2.5	15	20u	5.0		100	60	100C		TO66
8	RTR0320	200	5 0	65C	25m	15m	1 5	1 0m	100	2.0	15	20u	5 0		100	60	100C		TO66
9	RTR0420	200	5 0	65C	100m	50m	3.0	2.0m	125	2 5	15	20u	5 0		100	60	125C		TO66
10	2N4170	200	5.0	70C	60m$	50m$	2 5 $	2 0m	100C							100 *	100C	5.0 Ø	S262
11	2N4178	200	5 0	70C	60m$	50m$	2 5 $	2 0m	100C							100 *	100C	5 0 Ø	S263
12#	TAG3-200	200	5.0	70	25m	15m	2 0	1 5m	105	2 1	10					60	105	5.0	TO66
13#	2SF264	200	5 0	73C	10mØ	30m	2 5	3 0mØ	100J	1.3	5 0					90	100J	5 Ø	S141b
14#	2SF264A	200	5 0	73C	10mØ	30m	2.5	3 0mØ	100J	1 3	5 0		5 0	15u⊠	100 △	90	100J	5.0 Ø	S141b
15	2N4154	200	5 0	75C	60m$	50m$	2.5 $	2 0m	100C							100 *	100C	5.0 Ø	C84
16	2N4162	200	5.0	75C	60m$	50m$	2 5 $	2 0m	100C							100 *	100C	5.0 Ø	C85
17	2N4186	200	5.0	75C	60m$	50m$	2.5 $	2.0m	100C							100 *	100C	5.0 Ø	S264
18	2N4194	200	5.0	75C	60m$	50m$	2.5 $	2.0m	100C							100 *	100C	5 0 Ø	M363
19	2N4442	200	5 0	75	70m§	60m§	2.5 §	2 0m	100	2.5	15					80	100A		M386
20#	CR8-20	200	5.0	75C	30m	30m	2 0	2 0m	100J	2.0	15	1.0u	5 0	30u		120	100	5 0	M408
21#	BStC0113	200	5 0	80C	100m	40m	2.0	2 0m	125J	1.8	15				50 §	70	125J		S343
22#	BStC0513	200	5 0	80C	100m	40m	2.0	2 0m	125J	1.8	15				50 §	70	125J		TO66
23	RTN0220	200	5 0	80C	100m	50m	3.0	2 0m	100	2 5	15	.20u	5.0		100	60	100C		TO64
24	RTN0320	200	5 0	80C	25m	15m	1 5	1 0m	100	1 8	15	.20u	5.0		100	60	100C		TO64
25	RTN0420	200	5.0	80C	100m	50m	3 0	2.0m	125	2 5	15	20u	5 0		100	60	125C		TO64
26	RTN0520	200	5 0	80C	25m	15m	1.5	1.0m	125	1.8	15	.20u	5 0		100	60	125C		TO64
27	RTN0620	200	5 0	80C	25m	15m	1 5	1.0m	150	1.8	15	20u	5 0		100	60	150C		TO64
28	RTR0520	200	5.0	80C	25m	15m	1 5	1.0m	125	2.0	15	.20u	5.0		100	60	125C		TO66
29	RTS0220	200	5 0	80C	100m	50m	3 0	2 0m	100	2 5	15	.20u	5.0		100	60	100C		M94
30	RTS0320	200	5 0	80C	25m	15m	1.5	1 0m	100	1.8	15	20u	5 0		100	60	100C		M94
31	RTS0420	200	5 0	80C	100m	50m	3 0	2 0m	125	2 5	15	20u	5.0		100	60	125C		M94
32	RTS0520	200	5 0	80C	25m	15m	1.5	1 0m	125	1.8	15	.20u	5.0		100	60	125C		M94
33▼	TIC106B	200	5 0	80	5.0m	200u	1 0	1 0m	110C	1 7	5 0				10 Ø	30	110C	1 3	
34	CM102	200	5 0	100C	3 0m	20m	.80	30m†	150C	2 5	5 0	1.0u⊠	1.0	50u⊠	100	30	150A		TO59
35	CM108	200	5 0	100C	3 0m	20m	.80	.50m†	150C	3.0	5 0	50u	1.0	50u	150 Ø	20	150A		TO59
36▼	HEP302-RT	200	5 0	100J	10mØ§	30m§										80 §	100		S230
37#	CR5-202B	200 †	5 0	125C	150m	80m	3 0	10m	125C	3 0	5 0	2.0u	5 0	12u	20		125C	1 0	TO48
38	B01424	200	5 4	80C	20m	15m	1 5	1 5m	100C	1.6		1.5u	2 0	25u	30 §	100 §		500m†	M507
39	B05424	200	5 4	80C	20m	15m	1 5	1 5m	100C	1.6		1.5u	2.0	25u	30 §	100 §		500m†	S307
40	B18044	200	5 4	80C	20m	15m	1 5	1 5m	100C	1.6		1.5u	2 0	25u	30 §	100 §		500m†	
41	B19044	200	5 4	80C	20m	15m	1.5	1.5m	100C	1.6		1.5u	2 0	25u	30 §	100 §		500m†	
42▼	S2008B	200	5 4	80C	20m	15m	1.5	1.0m	100C	1.6	33	1.5u	2 0	25u§	30 §	100 §	125A	500m†	S307
43▼	S2008G	200	5 4	80C	20m	15m	1 5	1.0m	100C	1.6	33	1.5u	2.0	25u§	30 §	100 §	125A	500m†	M605
44▼	S2008H	200	5 4	80C	20m	15m	1 5	1 0m	100C	1.6	33	1.5u	2.0	25u§	30 §	100 §	125A	500m†	S361
45▼	S2008L	200	5 4	80C	20m	15m	1 5	1 0m	100C	1.6	33	1.5u	2.0	25u§	30 §	100 §	125A	500m†	M507
46	B01051	200	5 5	60C	6 0m	200u	1.0	100u	100C	1.6		1.5u	2.0	30u	4.0 §	100 §	125J	500m†	M507
47	B01052	200	5 5	60C	6 0m	1.5m	1 0	100u	100C	1.6		1.5u	2.0	20u	10 §	100 §	125J	500m†	M507
48	B05001	200	5 5	60C	6.0m	200u	1.0	100u	100C	1.6		1.5u	2 0	30u	4.0 §	100 §	125J	500m†	S307
49	B05002	200	5 5	60C	6.0m	1.5m	1 0	100u	100C	1.6		1.5u	2 0	20u	10 §	100 §	125J	500m†	S307
50#	2SF225	200	6 0	25C		25m	3 0	3 0m	100C	1.2 △	3.0					50	100	5 Ø	S141
51#	TM2010	200	6 0	25A	40mØ	40m	3 0	3 0m	110J	2 0	20	2 0u§	6.0	50u§	50 Ø§	100		120m	S141d
52#	TRA2	200	6.0	25A	50mØ	40m	3 0	3.0m	110J	2.0	20	2.0u§	6 0	50u§	50 Ø§	100		120m	M94g
53#	TRA2D	200	6.0	25A	50mØ	40m	3 0	3 0m	110J	2.0	20	2 0u§	6 0	50u§	50 Ø§	100		120m	S131
54	NCF200C	200	6 0	70B$		30m$	2 0 $	4 5mØ	60C	1.9 $	4 7			12u⊠		60	100A	50	S17
55	T206-5	200	6 0	70	50m	80m	5 0			2 2		2.5u			30 Ø	100	100J		TO5
56	T206-66	200	6.0	70	50m	80m	5.0			2.2		2.5u			30 Ø	100	100J		TO66
57#	T6F200C	200	6 0	85C	60m	40m	2 0	2 0m	125J	2 5	20	1 0u	10	12u§	400 §	100 §	125J	15	S131j%
58#	T6N200C	200	6 0	85C	60m	20m	2 0	2.0m	125J	2.5	20	1.0u	10	17u§	50 §	100 §	125J	15	S131j%
59#	T6N200H	200	6 0	85C	60m	20m	2 0	2 0m	125J	2.5	20	1.0u	10	17u§	50 §	100 §	125J	15	M94e%
60#	TW6N200C	200	6.0	85C	60m	50m	3.0	2.0m	125J	2.5	10				5.0 §	60 §	125J	3.0	S131j%
61#	TW6N200H	200	6 0	85C	60m	50m	3.0	2.0m	125J	2.5	10				5 0 §	60 §	125J	3 0	M94e%
62#	CR5-201B	200 †	6 0	95C	150m	80m	3 0	10m	125C	3.0	5.0	2.0u	5.0	12u			125C	1.0	TO48
63#	TP2004	200	6.0	100C	100m	40m	3.0	3.0m		1 2	4.0	2 0u	4.0	30u	100 §Ø	80	125C	.50	S18a
64#	CS5-02	200	6 2	100	50m	30m	3.0	3.0m	125	1.7	20			60u	200	110	125	10	
65▼	GCS20	200	6.3	80C	50m	25m	1.5	1.0m	100	1.8	20	1 5u	6.0	4.0u	200 Ø	60 §	110A	500m†	S307
66#	4RCM20	200	6 3	85B	45m	85m	3 0	3.0m	105	1.9	4.0			20u	20	50	105	.50	TO64
67	40738	200	6 3	85C	20m	15m	2.0			2.5	100	1 6u	30	15u	10 §	100	100C	40 Ø	M94
68	40742	200	6.3	85C	20m	15m	2 0			2.5	100	1 6u	30	15u	10 §	100	100C	40 Ø	S131
69	40746	200	6 3	85C	20m	15m	2 0			2.5	100	1 6u	30	15u	10 §	100	100C	40 Ø	S304
70	B01431	200	6 35	80C	20m	15m	1 5	1 5m	100C	1.6		1.5u	2.0	25u	30 §	100 §		500m†	M507
71	B05431	200	6 35	80C	20m	15m	1 5	1 5m	100C	1.6		1.5u	2.0	25u	30 §	100 §		500m†	S307
72	B18054	200	6 35	80C	20m	15m	1 5	1 5m	100C	1.6		1.5u	2.0	25u	30 §	100 §		500m†	
73	B19054	200	6.35	80C	20m	15m	1.5	1.5m	100C	1.6		1.5u	2 0	25u	30 §	100 §		500m†	
74▼	S2010B	200	6.35	80C	20m	15m	1 5	1 0m	100C	1.6	41	1.5u	2.0	25u§	30 §	100 §	125A	500m†	S307
75▼	S2010G	200	6.35	80C	20m	15m	1.5	1.0m	100C	1.6	41	1.5u	2.0	25u§	30 §	100 §	125A	500m†	M605
76▼	S2010H	200	6.35	80C	20m	15m	1.5	1.0m	100C	1.6	41	1.5u	2.0	25u§	30 §	100 §	125A	500m†	S361
77▼	S2010L	200	6 35	80C	20m	15m	1 5	1.0m	100C	1.6	41	1.5u	2.0	25u§	30 §	100 §	125A	500m†	M507
78#	BTY79-200R	200 §	6.4	85C	20	30m	3 0	5.0m	125	2.3		3.0u	10	20u		80	125	5.0 Ø	TO64
79#	BTY34-200R	200	6 4	110C		30m	3 0	5.0m	150J	2 3	20	3.0u	10	20u		50 *	150J	500m†	TO48
80#	2SF1117	200	6 5	25	6 0	28m	2 0	2.0	125J	1.4	10		3.0	20	50	50	125J	500m	C63c
81#	2SF14	200 ⊠	6.5	60B		20m	2 1	6 0m	100J	2.3	20					50	100J	.50	S105a
82#	GCO2005	200	7 0	25A	100mØ	100m	3.0	1 5m		2.0	5 0					35	100J	25	TO48
83	5TCRE	200 ⊠	7 0	60B	50m	50m	3 0	3.0mØ	125J	.83 Ø	5 0 §	2.0u	5.0	30u		60 *	150S	5 Ø	S56
84	40654	200	7 0 △	60C	20m	15m	1 5					1.5u	4.5	15u§	20 §	80 §	100C	500m†	C16c
85	40656	200	7 0 △	60C	20m	15m	1 5					1.5u	4 5	15u§	20 §	80 §	100C	500m†	M457
86	40658	200	7 0 △	60C	20m	15m	1 5					1.5u	4 5	15u§	20 §	80 §	100C	500m†	M466
87	SCR52A	200 ⊠	7.0	60C	25m	20m	2.0	1.0m△	125C		15	1.0u§	100	20u§		100 §	125J	10	S121
88	SCRF52A	200 ⊠	7 0	60C	50m	20m	2 0	1 0m△	125C	1.9 △	15	2 0u§	10	6.0u§		100 §	125J	10	S121
89	SCRF520	200 ⊠	7 0	60C	50m	25m	2 0	1 0m	125C	1.9 △	15	2.0u§	10	12u§		100 §	125J	10	S121
90	TI3012	200	7.0	60C	30m	25m	3 0	1 0m	125	1.8	5 0						125C	5.0 Ø	M245
91	C12B	200	7.0 △	70C	8 0mØ	15m	2 0	9 0m	125J	1.8	15	1.0u	10	12u§		60	125J	5.0	S17
92#	T5F200	200	7.0	75	20m	35m	3 0	10m	90J	2.5	25	2 0u	5 0	20u	20	15	45A	.20	S155
93	2N3937	200	7 0	80C	110m	60m	3 2	1 0m	125C	2 3	7 0	3 0u		8.0u§		100 *§	125C	.50	TO64
94	2N5165	200	7 0	85C	90m§	75m$	2.5 §	5.0m	100C	1.7 †	41					240 *	100C	5 †	M94b
95	2N5169	200	7 0	85C	90m§	75m$	2.5 §	5 0m	100C	1 7 †	41					240 *	100C	.5 †	S131c
96	JAN2N1774A	200	7.0	105	25m	30m	2 0	1 0m	25	1.8	14 †	5 0u	5 0	30u	5 0	60	150A		TO64
97	5RC20	200 ⊠	7 4 △	60C	5 0mØ	15m	2.0	4 5m	105C	1.9	15 †	2 5u	60		20	60 △	105J	.50 †	TO64
98	5RCF20A	200 ⊠	7 4 △	60C	5 0mØ	15m	1 4	4.5m	125C	1 9	15 †	2 5u	5 0	12u		60 △	125J	.50 †	TO64
99	5RC20A	200 ⊠	7 4 △	80C	5 0m	15m	1.4	6.0m	125C	1.9	15 †	2 5u				75 △	125J	.50 †	TO64
100	C20B	200	7 4 △	80	30m	25m	1 5	3 5m	100J	1.8	10					80 §	100J	.50	S131
101	C22B	200	7 4 △	80	30m	25m	1 5	3 5m	100J	1 8	10					80 §	100J	.50	M94
102#	CR4-201A	200 †	7 4 △	80	30m	25m	2 0	3 5m	100J	1 8	10	1 1u	8 0	50u	20 △	80 △	125J	5 0 Ø	M94
103#	CR4-201B	200 †	7 4 △	80	30m	25m	2 0	3 5m	100J	1 8	10	1 1u	8 0	50u	20 △	80 △	125J	5 0 Ø	S131
104#	TAG6-200	200	7 5	70C	25m	25m	2 0	3 0m	105	1 7	10					100	105	500m†	TO66
105#	TAG7-200	200	7 5	70C	25m	25m	2 0	3 0m	105	1 7	10					100	105	500m†	TO48
106#	TAG7S200	200	7 5	70C	25m	25m	2 0	3 0m	105	1.7	10			12u		100	105	500m†	TO48
107#	BTX31-200	200	7 5	85	15m	15m	3 0	3 0m	125	1 7	10					100	125	5.0	TO48
108#	BTX31S200	200	7 5	85	15m	15m	3 0	3 0m	125	1 7	10			12u		100	125	5.0	TO48
109#	BTX71-200	200	7 5	85	40m	40m	3 0	3 0m	125	1 7	10	1 4u	5.0	20u	200	100	125	5 0	TO48
110#	BTX71S200	200	7 5	85	40m	40m	3 0	3 0m	125	1 7	10	1 4u	5 0	12u	200	100	125	5 0	TO48

SYMBOLS AND CODES EXPLAINED IN INTERPRETER

6. SILICON CONTROLLED RECTIFIERS

IN ORDER OF (1) PEAK REV. VOLT., (2) MAX. CONT. CUR., (3) TEMPERATURE, (4) TYPE No.

LINE No	4 TYPE No.	1 PRV and VBO (V)	MAX. CONT. CURRENT 2 Idc (A)	3 at TEMP (°C)	MAX. HOLD. CUR Ih @ 25°C (A)	MAX. GATE FIRING SPEC at 25°C Igf (A)	Vgf (V)	MAX SAT I Ir@PRV and Is@VBO (A)	at TEMP (°C)	MAX. FWD. VOLT. DROP at 25°C Vf (V)	@ If (A)	SWITCHING TIME at 25°C Ton (s)	for If (A)	Toff (s)	MIN. dV/dt @ 25°C (V/us)	ABS. MAX. RATINGS 1Cy PK SURGE I@25°C (A)	MAX TEMP (°C)	MAX GATE POWER (W)	DWG. No.
1	2N3755	200	7 5	100	200m	200m	2 3	6 0m	120A				10	75u	200	250 *	120A	2.0	TO48
2	B01071	200	7 8	60C	6.0m	200u	1 0	100u	100C	1 6		1 5u	2 0	30u	4.0 §	100 §	125J	500mt	M507
3	B01072	200	7 8	60C	6 0m	1 5m	1 0	100u	100C	1.6		1 5u	2.0	20u	10 §	100 §	125J	500mt	M507
4	B05021	200	7 8	60C	6 0m	200u	1 0	100u	100C	1 6		1 5u	2 0	30u	4 0 §	100 §	125J	500mt	S307
5	B05022	200	7 8	60C	6 0m	1.5m	1 0	100u	100C	1.6		1 5u	2.0	20u	10 §	100 §	125J	500mt	S307
6	C122B	200	8 0		30m	25m	1 5	2 0m	100C	2.2 †	16				40 Ø	80	100J		M490
7#	SF5D11	200	8 0	24		20m	2 0	6 0m	125J	2.0	20					60	125J	500m	S141a
8	MCR2315-4	200 △	8.0 △	70C	50m	40m	1 5	3.0m	100J	1 6	5 0	1 0u	5 0	15u	50 Ø§	80 △	100J	5.0 Ø	S230
9	MCR2614L4	200 △	8 0 △	70C	50m	40m	1 5	3 0m	100J	1.6	5 0	1 0u	5 0	15u	50 Ø§	80 △	100J	5.0 Ø	C85a
10▼	TIC116B	200	8 0	70	40m	20m	1 5	2 0m	110C	1 7	8.0				100 Ø	80	110C	5 0	
11	2N4317	200	8.0	85	25m	15m	1 2	2.0mt	150	2.0	8.0				200	60 §*	150A	.5 †	C63d
12#	T6F200H	200	8 0	85C	60m	40m	2 0	2.0m	125J	2 5	20	1 0u☑	10	12u§	400 §	75 §	125J		M94e%
13#	T8F200C	200	8 0	85C	60m	40m	2 0	2 0m	125J	2 0	20	1 0u	10	12u§	400 §	120 §	125J	15	S131j%
14#	T8N200C	200	8 0	85C	60m	20m	2 0	2 0m	125J	2 0	20	1 0u	10	18u§	50 §	120 §	125J	15	S131j%
15#	T8N200H	200	8 0	85C	60m	20m	2 0	2.0m	125J	2.0	20	1.0u	10	18u§	50 §	120 §	125J	15	M94e%
16#	TW8N200C	200	8 0	85C	60m	50m	3 0	2 0m	125J	1 9	10				5 0 §	80 §	125J	3.0	S131j%
17#	TW8N200H	200	8 0	85C	60m	50m	3 0	2.0m	125J	1 9	10				5 0 §	80 §	125J	3 0	M94e%
18▼	HEPR1221-RT	200	8 0	100J	10mØ§	10m§										80 §	100		M386
19▼	HEPR1243-RT	200	8 0	100J	25mØ§	20m§										100 §	100		S230
20	MCR2604-4	200	8 0	100J	25m	20m	1 5	2 0m	100J	1 3	5 0	1.0u	5 0	12u	50	100	100J	5 0	M304a
21	MCR2605-4	200	8 0	100J	25m	20m	1 5	2 0m	100J	1 3	5 0	1.0u	5 0	12u	50	100	100J	5.0	M305
22#	CS8-02	200	8 2	100	50m	30m	3 0	3 0m	125	1 6	26			60u	200	170	125	10	
23#	BTX64/200R	200	8 5	85B	10mØ§	65m	3 5	12m	125J	3 0	50	40u	10	10u	45	140 *	125J	5 †	TO48
24#	BTX75-200R	200	8.5	110B	10m§Ø	65m	3.5	12m	150J	3.0	50	3.0u	10	25u		140	150J	5 †	TO48
25#	TP2006	200	9 0	100C	100m	40m	3 0	3.0m		1 2	6 0	2.0u	6 0	30u	100 §Ø	100	125C	.50	S18a
26	B01091	200	9 1	60C	6 0m	200u	1 0	100u	100C	1.6		1 5u	2 0	30u	4 0 §	100 §	125J	500mt	M507
27	B01092	200	9 1	60C	6.0m	1 5m	1.0	100u	100C	1.6		1 5u	2 0	20u	10 §	100 §	125J	500mt	M507
28	B05041	200	9.1	60C	6 0m	200u	1 0	100u	100C	1 6		1 5u	2 0	30u	4.0 §	100 §	125J	500mt	S307
29	B05042	200	9 1	60C	6.0m	1 5m	1 0	100u	100C	1.6		1.5u	2 0	20u	10 §	100 §	125J	500mt	S307
30#	T8F200H	200	9 5	85C	60m	40m	2 0	2 0m	125J	2 0	20	1.0u☑	10	12u§	400 §	95 §	125J		M94e %
31	NCF200D	200	10		15mØ	50m	3 5	5.0m	100	1 2	10	500n	10	6 0u	25 §	125	100A	50 †	TO48
32	NCM200E	200	10		25mØ	150m	2 0	5.0m	100	1 2	10	500n	10	6 0u	200 §		120A	1 0 †	TO48
33#	BTY85	200	10	25A	20m§	25m§	3.5	6.0mØ	100J	1 2	16	4.5u§	50	20u§		120	100A	5 0	S98
34#	TRA12	200	10	25A	50mØ	80m	3 0	3 0m	110J	2.0	30	2 0u§	10	50u§	50 Ø§	125		240m	M94g
35#	TRA12D	200	10	25A	50mØ	80m	3 0	3 0m	110J	2 0	30	2 0u§	10	50u§	50 Ø§	125		240m	S131
36	2N1846	200	10 △	35C		150m$	3 5 $	6 0mØ	35C	2 5 †	10					125 *	100C	.5 †	TO48
37#	CR10B4	200	10	59C		30m	2 5	3 0m	100J	1 6	30					150 △	100J	5 0 Ø	S334
38#	2SF274	200	10	63C	10mØ	30m	2.5	3 0mØ	100J	1 2	10					90	100J	5 Ø	S141b
39#	2SF274A	200	10	63C	10mØ	30m	2 5	3 0mØ	100J	1 2	10		10	15u☑	100 △	90	100J	5 0 Ø	S141b
40#	2SF248	200	10	65C	10mØ	25m	2 5	5 0m	125C	2.3	20	3 0u	10	15u	20	50	125J	500mt	TO3
41	RTT0120	200	10	65C	200m	50m	3 0	2 0m	100	2 5	30	20u	10		100	100	100C		TO48
42	RTT0420	200	10	65C	200m	50m	3 0	2 0m	125	2 5	30	20u	10		100	100	125C		TO48
43	RTU120	200	10	65C	20	50m	3.0	2 0m	100	2 5	30	200n	10		100	100	100C		S131
44	RTU0420	200	10	65C	20	50m	3.0	2 0	125	2 5	30	200n	10		100	100	125C		S131
45▼#	CR10CY4	200	10	66C		40m	2 5	4 0m	125J	2 5	30		10	15u☑	100 △	140 △	125J	5 0 Ø	S350
46#	CR10EY4	200	10	66C		40m	2 5	4 0m	125J	2.5	30		10	15u☑	100 △	140 △	125J	5 0 Ø	S334
47#	CR5-202AB	200	10	70C	20mØ	80m	3 0	10m	100C	2 0	16	2 0u	20	20u☑	20	90	125	5 0 Ø	
48#	CR5-202BB	200	10	70C	20mØ	80m	3 0	10m	100C	2 0	16	2 0u	20	15u☑	20	90	125	5 0 Ø	
49#	CR5-202CB	200	10	70C	20mØ	80m	3 0	10m	100C	2 0	16	2 0u	20	12u☑	20	90	125	5 0 Ø	
50#	CR5-202DB	200	10	70C	20mØ	80m	3 0	10m	100C	2 0	16	2 0u	20	8 0u☑	20	90	125	5 0 Ø	
51#	CR5-202EB	200	10	70C	20mØ	80m	3 0	10m	100C	2 0	16	2 0u	20	6 0u☑	20	90	125	5 0 Ø	
52#	CR5-2029B	200	10	70C	20mØ	80m	3 0	10m	100C	2 0	16	2 0u	20	4 0u☑	20	90	125	5 0 Ø	
53	T210	200	10	70	60m	100m	5 0			2 2		3 0u			40 Ø	100	100J		M94
54	T210S	200	10	70	60m	100m	5.0			2 2		3 0u			40 Ø	100	100J		S131
55#	TAG10-200	200	10	70	25m	25m	3 0	3.0m	105	2 0	15					120	105	5 0	TO48
56#	TAG10S200	200	10	70	25m	25m	3 0	3 0m	105	2 0	15			12u		120	105	5 0	TO48
57	2N1846A	200	10 △	80C		150m$	3 7 $	6 0mØ	80C	2.5 †	10					125 *	125C	5 †	TO48
58	B01438	200	10	80C	20m	20m	1 5	1 5m	100C	1 6		1 5u	2 0	25u	30 §	150 §		600mt	M507
59	B05438	200	10	80C	20m	20m	1 5	1 5m	100C	1 6		1 5u	2 0	25u	30 §	150 §		600mt	S307
60	B18064	200	10	80C	20m	20m	1 5	1.5m	100C	1.6		1 5u	2 0	25u	30 §	150 §		600mt	
61	B19064	200	10	80C	20m	20m	1 5	1.5m	100C	1 6		1 5u	2 0	25u	30 §	150 §		600mt	
62▼	S2016B	200	10	80C	20m	20m	1 5	1.0m	100C	1 6	64	1 5u	2 0	25u§	30 §	150 §	125A	600mt	S307
63▼	S2016G	200	10	80C	20m	20m	1 5	1 0m	100C	1 6	64	1 5u	2 0	25u§	30 §	150 §	125A	600mt	M605
64▼	S2016H	200	10	80C	20m	20m	1 5	1.0m	100C	1 6	64	1 5u	2 0	25u§	30 §	150 §	125A	600mt	S361
65▼	S2016L	200	10	80C	20m	20m	1 5	1 0m	100C	1 6	64	1 5u	2 0	25u§	30 §	150 §	125A	600mt	M507
66▼#	CR10C4	200	10	84C		30m	2 5	3 0m	125J	1 6	30				20 △	150 △	125J	5 0 Ø	S350
67#	BTX32-200	200	10	85	25m	25m	3 0	3.0m	125	2.0	15					120	125	5 0	TO48
68#	BTX32S200	200	10	85	25m	25m	3 0	3 0m	125	2.0	15			12u		120	125	5.0	TO48
69#	BTX72-200	200	10	85	40m	40m	3 0	3 0m	125	2 0	15	1 4u	5 0	20u	200	120	125	5 0	TO48
70#	BTX72S200	200	10	85	40m	40m	3 0	3.0m	125	2.0	15	1.4u	5 0	12u	200	120	125	5 0	TO48
71#	T10N200C	200	10	85C	60m	20m	2 0	2 0m	125J	1.8	20	1 0u	10	20u§	50 §	140 §	125J	15	S131j%
72#	T10N200H	200	10	85C	60m	20m	2 0	2 0m	125J	1.8	20	1.0u	10	20u§	50 §	140 §	125J	15	M94e%
73#	TW10N200C	200	10	85C	60m	50m	3 0	2 0m	125J	1.7	10				5 0 §	100 §	125J	3 0	S131j%
74#	TW10N200H	200	10	85C	60m	50m	3 0	2 0m	125J	1 7	10				5 0 §	100 §	125J	3.0	M94e%
75#	CR10-202B	200 †	10	125C	150m	80m	3 0	10m	125C	2 0	10	2 0u	10	30u	20		125C	1 0	TO48
76#	2SF24	200 ☑	11	50B		40m	3 0	12m	100J	2 8	50					125	100J	500m	S236a
77#	2SF752	200	11	50B		40m	3 0	4.5m	100J	2 8	50		5 0	10u	20	125	125J	50	S18d
78#	2SF752A	200	11	50B		40m	3 0	4 5m	100J	2 8	50		5 0	5 0u	20	125	125J	50	S18d
79	UCR20	200 △	12	55C	50m	50m				1 2	3 0	500n	30	15u	250	60	125J	10 ☑	S296
80#	CR8-201C	200 †	12	70C	15mØ	25m	2 5	2 5m	125J	2.0	20	1 1u	8 0	50u	20 △	80 △	125J	5 0 Ø	TO64
81▼	TIC126B	200	12	70	40m	20m	1 5	2 0m	110C	1.4	12				100 Ø	100	110C	5.0	
82#	BTX65/200R	200	12	85B	10m§Ø	65m	3 5	12m	125J	2 0	50	.40u	10	10u	45	200	125J	5 †	TO48
83#	CR10-201B	200 †	12	85C	150m	80m	3 0	10m	125C	2 0	10	2 0u	10	30u			125C	1 0	TO48
84#	CR10-202AB	200	12	85C	20mØ	80m	3 0	10m	125C	2 0	50	2 6u	32	20u☑	20	120	125	5.0 Ø	
85#	CR10-202BB	200	12	85C	20mØ	80m	3.0	10m	125C	2 0	50	2 6u	32	15u☑	20	120	125	5.0 Ø	
86#	CR10-202CB	200	12	85C	20mØ	80m	3 0	10m	125C	2 0	50	2 6u	32	12u☑	20	120	125	5 0 Ø	
87#	CR10-202DB	200	12	85C	20mØ	80m	3 0	10m	125C	2.0	50	2 6u	32	8.0u☑	20	120	125	5.0 Ø	
88#	CR10-202EB	200	12	85C	20mØ	80m	3 0	10m	125C	2 0	5 0	2 6u	32	6 0u☑	20	120	125	5.0 Ø	
89#	CR10-2029B	200	12	85C	20mØ	80m	3.0	10m	125C	2 0	5 0	2 6u	32	4 0u☑	20	120	125	5 0 Ø	
90#	BTX76-200R	200	12	110B	10m§Ø	40m	3.0	12m	150J	2 0	50	3 0u	10	25u		200	150J	5 †	TO48
91	40750	200	12 5	75C	20m	15m	2 0			2 4	100	2 0u	30	20u	10 §	200	100C	40 Ø	M94
92	40754	200	12 5	75C	20m	15m	2 0			2 4	100	2.0u	30	20u	10 §	200	100C	40 Ø	S131
93	40758	200	12 5	75C	20m	15m	2.0			2 4	100	2 0u	30	20u	10 §	200	100C	40 Ø	S304
94#	8RCM20	200	12 6	65B	65m	85m	3 0	6 0m	105	2 6	8.0			20u	20	100	105	50	TO48
95#	8RCV20	200	12 6	105	50m	45m	2 9	6 0m	105	2 6			100	10u	100	100	105	50	TO48
96	2N1846B	200	13 △	80C		75m	3 7 $	1 0mØ	125C	1.8 †	13					150 *	125C	5 †	TO48
97	2N3669	200	13	80C	50m	40m	2 0	1 3m	100C	1 8	25					200	100	5 Ø	Z24
98#	2SF75	200	15	25C		50m	3 0	6 0m	100C	1 2 △	7 0					100	100	5 Ø	S94
99#	BTY87/200R	200	15	61A	10mØ§	65m	3 5	12m	125J	3 0	50	3 0u§	10	15u	100	106	125J	50	TO48
100	T215	200	15	70	60m	100m	5.0			2 2		3 0u			40 Ø	100	100J		M94
101	T215S	200	15	70	60m	100m	5 0			2 2		3 0u			40 Ø	100	100J		S131
102#	TAG15-200	200	15	70	50m	50m	3 0	3 0m	105	2 0	20					150	105	5.0	TO48
103#	TAG15S200	200	15	70	50m	50m	3 0	5 0m	105	2 0	20			12u		150	105	5 0	TO48
104#	BTX70-200	200	15	85	50m	50m	3 0	3 0m	125	2 0	20					150	125	5.0	TO48
105#	BTX70S200	200	15	85	50m	50m	3 0	3 0m	125	2 0	20			12u		150	125	5.0	TO48
106#	BTX74-200	200	15	85	50m	50m	3 0	3 0m	125	2 0	20	1 4u	10	20u	200	150	125	5.0	TO48
107#	BTX74S200	200	15	85	50m	50m	3 0	3 0m	125	2 0	20	1 4u	10	12u	200	150	125	5.0	TO48
108▼	HEP306-RT	200	15	100J	10mØ§	50m§										200 §	100		S131q
109▼	HEP307-RT	200	15	100J	10mØ§	50m§										200 §	100		S131q☑
110	B15004	200	15 8	80C	25m	25m	2 0	1.5m	100C	1 6		1.8u	2.0	25u	30 §	200 §		800mt	M505

SYMBOLS AND CODES EXPLAINED IN INTERPRETER

6. SILICON CONTROLLED RECTIFIERS

IN ORDER OF (1) PEAK REV. VOLT., (2) MAX. CONT. CUR., (3) TEMPERATURE, (4) TYPE No.

LINE No	4 TYPE No.	1 PRV and VBO (V)	MAX. CONT. CURRENT 2 Idc (A)	3 at TEMP (°C)	MAX HOLD. CUR Ih @ 25°C (A)	MAX. GATE FIRING SPEC at 25°C Igf (A)	Vgf (V)	MAX SAT I Ir@PRV and Is@VBO (A)	at TEMP (°C)	MAX. FWD VOLT. DROP at 25°C Vf (V)	@ If (A)	SWITCHING TIME at 25°C Ton (s)	for If (A)	Toff (s)	MIN. dV/dt @ 25°C (V/us)	ABS. MAX. RATINGS 1Cy PK SURGE I@25°C (A)	MAX TEMP (°C)	MAX GATE POWER (W)	DWG. No.
1	B16004	200	15 8	80C	25m	25m	2.0	1 5m	100C	1 6		1 8u	2.0	25u	30 §	200 §		800m†	M504
2	B17004	200	15 8	80C	25m	25m	2.0	1 5m	100C	1.6		1 8u	2.0	25u	30 §	200 §		800m†	S308
3	B18004	200	15.8	80C	25m	25m	2.0	1.5m	100C	1.6		1 8u	2.0	25u	30 §	200 §		800m†	
4	B19004	200	15 8	80C	25m	25m	2.0	1 5m	100C	1 6		1 8u	2.0	25u	30 §	200 §		800m†	
5▼	S2025	200	15 8	80C	25m	25m	2.0	1.0m	100C	1 6	100	1.8u	2.0	25u§	30 §	225 §	125A	800m†	M606
6▼	S2025C	200	15 8	80C	25m	25m	2.0	1.0m	100C	1.6	100	1.8u	2.0	25u§	30 §	225 §	125A	800m†	M607
7▼	S2025D	200	15 8	80C	25m	25m	2.0	1 0m	100C	1 6	100	1 8u	2.0	25u§	30 §	225 §	125A	800m†	S362
8▼	S2025G	200	15.8	80C	25m	25m	2 0	1.0m	100C	1 6	100	1.8u	2.0	25u§	30 §	225 §	125A	800m†	M605
9▼	S2025H	200	15.8	80C	25m	25m	2.0	1 0m	100C	1 6	100	1 8u	2.0	25u§	30 §	225 §	125A	800m†	S361
10#	BTY89	200	16	25A	10m§	25m§	3.0	6.0mØ	125J	.86	16	4 5u§	50	20u§		140	125A	5 0	S98
11#	TR2	200	16	25A	50mØ	80m	3 0	3 0m	125J	2 0	50	2.0u§	10	50u§	50 Ø	250		240m	S313
12#	TR2015S	200	16	25A	100mØ	80m	3.0	5 0m	125J	2 5	50	2 0u§	10	20u§	200 §	250		240m	S313
13#	TRA22	200	16	25A	50mØ	80m	3 0	3 0m	110J	2.0	50	2.0u§	10	50u§	50 Ø§	250		240m	M94g
14#	TRA22D	200	16	25A	50mØ	80m	3 0	3 0m	110J	2 0	50	2 0u§	10	50u§	50 Ø§	250		240m	M94g
15#	SF10D11	200	16	26		80m	3 5	12m	100C	3 0	50					113	100J	500m	S18
16♦#	BStC0313	200	16	59C	30m	30m	2 5	3 0	125J	1 9	27				200	180 §	125	10	
17	2N685	200	16 △	65C		80m$	3 0 $	6.0mØ	125C	2 0 Ø	16					150 *	125C	.50	TO48
18	JAN2N685	200	16 △	65C	50m	80m	3 0	2.0m	25	2 0 †	50	5 0u	10	30u		150	125A	.5 †	TO48
19	2N2888	200	16 △	65C		80m$	3 0 $	6 0m	65C	2 0 †	16			12u	20	150 §*	125C	.5 †	TO48
20	10RC20	200 ⊘	16 △	65C	10mØ	40m	3.0	6.0mØ	105C	2.3 †	31					125 △	105J	.50 †	TO48
21	RTT0220	200	16	65C	200m	50m	3 0	2 0m	100	2 5	50	.20u	16		100	150	100C		TO48
22	RTT0320	200	16	65C	50m	25m	2 0	1 0m	100	2.0	50	20u	16		100	150	100C		TO48
23	RTT0520	200	16	65C	200m	50m	3.0	2.0m	125	2.5	50	20u	16		100	150	125C		TO48
24	RTT0620	200	16	65C	50m	25m	2.0	1 0m	125	2 0	50	20u	16		100	150	125C		TO48
25	RTU0220	200	16	65C	.20	50m	3 0	2 0m	100	2.5	50	200n	16		100	100	100C		S131
26	RTU0320	200	16	65C	50m	25m	2 0	1 0m	100	2 0	50	200n	16		100	150	100C		S131
27	RTU0520	200	16	65C	.20	50m	3.0	2 0	125	2 5	50	200n	16		100	100	125C		S131
28	RTU0620	200	16	65C	50m	25m	2 0	1.0m	125	2 0	50	200n	16		100	150	125C		S131
29	2N3651	200	16	70	350m$	500m$	4.5	6.0m	120				100	15u	200	180 *	120C	1 0	TO48
30	2N3656	200	16	70	350m$	500m$	4 5	6.0m	120				100	10u	200	180 *	120C	1.0	TO48
31	MCR3818-4	200	16	70C	50m	40m	1 5			1.2	20	1.0u	20	15u	50 Ø§	240 §	100J	500m†	M94b
32	MCR3918-4	200	16	70C	50m	40m	1.5			1.2	20	1 0u	20	15u	50 Ø§	240 §	100J	500m†	S131k
33#	BTY91/200R	200	16	75B	10mØ§	40m	3 0	12m	125J	2.0	50	3.0u§	10	20u§	100	136	125J	5 0	TO48
34#	11RC20	200	16 △	85B	20m	40m	3.0	6.0m		2 3	10	3.0u	10	25u	20	125	125A	5.0 Ø	S141c
35♦#	BStD0313	200	16	85C	30m	30m	2 5	3 0	125J	1.6	33				200	250 §	125	10	
36	C36B	200	16 △	100	20mØ	50m	3 5	6 0m	100J	1.2		4.5u⊘	10	20u		125	100B	50	S18
37▼	HEPR1304-RT	200	16	100J	10mØ§	10m§										250 §	100		S131r
38	16C20	200	16	125J	50m	15m	2 0	10m	125J	2.0	50	7 0u	16	75u§		150	125J	5.0 Ø	TO48#△
39	16C20B	200	16	125J	50m	40m	2 0	10m	125J	2 0	50	7.0u	16	75u§	25	150	125J	5 0 Ø	TO48#△
40	16C20C	200	16	125J	50m	40m	2.0	10m	125J	2 0	50	7.0u	16	75u§		150	125J	5.0 Ø	TO48#△
41#	CR16-202B	200 †	16	125C	120m	40m	3.0	10m	125C	2.0	16	2 0u	10	20u	20		125C	1 0	TO48
42#	T14F200C	200	17	85C	120m	50m	3.0	10m	125J	2.5	50	1.5u⊘	10	15u§	200 §	200 §	125J		S63g%
43#	T14F200E	200	17	85C	120m	50m	3 0	10m	125J	2.5	50	1 5u⊘	10	15u§	200 §	200 §	125J		M329%
44	2N685A	200	18 △	65C	50m$⊘	40m	3 0 $	1 0mØ	65C	2.1 †	18				200	250 *	125C	.5 †	TO48
45	TIX92	200	18	75C	40m	40m	3.5	1.0m	125	1 6	18				100		125C	5 Ø	M246
46#	12RCM20	200	18 8	65B	65m	85m	3.0	6.0m	105	2.2	12			20u	20	150	105	.50	TO48
47#	CS16-02	200	19	95	50m	80m	3 0	3.0m	125	1.8	60			60u	200	350	125	10	
48#	BTX12/200R	200	20	25$	40m§	50m	3.0			3.5 §	175	4 0u§	10	10u§	20 §	250	125J	5.0	S182
49#	CR20A4	200	20	57C		50m	3 0	3.0m	100J	1.8	60					300 △	100J	5.0 Ø	S106b
50#	2SF294	200	20	58C	10mØ	50m	3 5	3.0mØ	100	1.3	20					300	100J	5 Ø	S106b
51#	2SF294A	200	20	58C	10mØ	50m	3 5	3.0mØ	100	1.3	20		20	15u⊘	100 △	300	100	5.0 Ø	S106b
52#	TAG20-200	200	20	60	50m	50m	3.0	3.0m	105	1.7	30					175	105	5 0	TO48
53#	TAG20S200	200	20	60	50m	50m	3.0	3 0m	105	1.7	30			12u		175	105	5 0	TO48
54	MCR649-4	200 ⊘	20	65C		80m	3.5	5.0m△	100	.70 Ø	13 §					260 △	100J	5 Ø	TO41
55#	BTX33-200	200	20	70	50m	50m	3 0	3.0m	125	1.7	30					175	125	5 0	TO48
56#	BTX33S200	200	20	70	50m	50m	3.0	3.0m	125	1 7	30			12u		175	125	5 0	TO48
57#	CR20EY4	200	20	74C		50m	3.0	6.0m	125J	2 5	60		20	15u⊘	100 △	300 △	125J	5.0 Ø	S106b
58#	6TW2	200	20	75C$	25m	50m	2.0	10m	100J	1.8 §	50	2 5u§	20	20u§		300	150S	2 0	
59#	CR16-201B	200 †	20	75C	120m	40m	3 0	10m†	125C	2.0	16	2.0u	10	30u			125C	1.0	TO48
60#	CR16-202AB	200	20	75C	7 0mØ	60m	3.0	10m	125C	2.0	50	2.5u	50	20u⊘	20	160	125	5 0 Ø	
61#	CR16-202BB	200	20	75C	7 0mØ	60m	3 0	10m	125C	2 0	50	2.5u	50	15u⊘	20	160	125	5 0 Ø	
62#	CR16-202CB	200	20	75C	7 0mØ	60m	3 0	10m	125C	2 0	50	2.5u	50	12u⊘	20	160	125	5 0 Ø	
63#	CR16-202DB	200	20	75C	7 0mØ	60m	3 0	10m	125C	2.0	50	2 5u	50	8 0u⊘	20	160	125	5.0 Ø	
64#	CR16-202EB	200	20	75C	7 0mØ	60m	3 0	10m	125C	2.0	50	2 5u	50	6.0u⊘	20	160	125	5.0 Ø	
65#	CR16-2029B	200	20	75C	7.0mØ	60m	3.0	10m	125C	2.0	50	2 5u	50	4.0u⊘	20	160	125	5.0 Ø	
66#	BTX81-200R	200	20	85B	100m	80m	3.5			1 8	50						125J	1 0 †	S94a
67	TCR202	200	22	25C	25mØ§	50m	3 0	3 0mØ	100C	820mØ	20 §	7 5u		12u		150	125J	500m	S148
68#	2SF34A	200 ⊘	22	64B		40m	3.0	12m	125J	2.0	50					150	125J	500m	S236a
69#	2SF762	200	22	64B		40m	3.0	4.5m	125J	2.0	50		10	10u	20	150	125	.50	S18d
70#	2SF762A	200	22	64B		40m	3.0	4.5m	125J	2.0	50		10	5.0u	20	150	125	.50	S18d
71	2N3871	200	22	65		80m	3.0	2 5m	100	1 9 †	69					350	100		M94
72	2N3897	200	22	65		80m	3.0	2 5m	100	1.9 †	69					350	100		S131
73	B15024	200	22	80C	40m	25m	2.0	1.5m	100C	1.6		1.8u	2.0	25u	30 §	300 §		800m†	M505
74	B16024	200	22	80C	40m	25m	2.0	1 5m	100C	1.6		1 8u	2.0	25u	20 §	300 §		800m†	M504
75	B17024	200	22	80C	40m	25m	2.0	1.5m	100C	1 6		1.8u	2.0	25u	30 §	300 §		800m†	S308
76	B18024	200	22	80C	40m	25m	2.0	1.5m	100C	1.6		1.8u	2.0	25u	30 §	300 §		800m†	
77	B19024	200	22	80C	40m	25m	2.0	1 5m	100C	1 6		1 8u	2.0	25u	30 §	300 §		800m†	
78▼	S2035	200	22	80C	40m	25m	2.0	1.0m	100C	1 6	141	1.8u	2 0	25u§	30 §	325 §	125A	800m†	M606
79▼	S2035C	200	22	80C	40m	25m	2.0	1.0m	100C	1.6	141	1.8u	2 0	25u§	30 §	325 §	125A	800m†	M607
80▼	S2035D	200	22	80C	40m	25m	2 0	1 0m	100C	1.6	141	1.8u	2.0	25u§	30 §	325 §	125A	800m†	S362
81▼	S2035G	200	22	80C	40m	25m	2 0	1.0m	100C	1.6	141	1 8u	2.0	25u§	30 §	325 §	125A	800m†	M605
82▼	S2035H	200	22	80C	40m	25m	2 0	1.0m	100C	1 6	141	1 8u	2.0	25u§	30 §	325 §	125A	800m†	S361
83#	TS235	200	22 5	25A	20mØ	80m	3.0	6.0m	125J	2.2	70	5.0u§	15	50u§	50 Ø§	250		240m	S313
84#	T18F200C	200	23	85C	120m	50m	3 0	10m	125J	2.3	60	1.5u⊘	15	20u§	50 §	300 §	125J		S63g%
85#	T18F200E	200	23	85C	120m	50m	3 0	10m	125J	2.3	60	1 5u⊘	15	20u§	50 §	300 §	125J		M353%
86#	2SF135	200	25	25C		50m	3 0	6.0m	125C	1 2 △	12					150	125	5 Ø	S94
87#	ATS20	200	25	25		100m	2 0												
88	C37B△	200	25 △	25C		80m	3.5	12m	105	2.3	30					125	105C	.50	TO48
89	10RC20A	200 ⊘	25 △	45C	10mØ	90m	2 5	6.0mØ	125C	2.8	50 †	3 0u	10	30u	25 §	200 △	125J	.50 †	TO48
90	10RCF20A	200 ⊘	25 △	45C	10mØ	90m	2.5	6.0mØ	125C	2 8	50 †	3 0u	10	12u§	25 §	200 △	125J	500m†	TO48
91#	SF16D11	200	25	57		40m	3 0	12m	125C	1 9	50					135	125J	500m	S18
92#	2N685AS	200	25	60	50m	40m	3 0	3.0m	125	1.7	30	1.4u	10	12u	200	200	125	5.0	TO48
93#	2N685S	200	25	60	50m	40m	3.0	3.0m	125	1.7	30	1.4u	10	12u	25	200	125	5.0	TO48
94#	BTX73-200.	200	25	60	50m	50m	3.0	3.0m	125	1 7	30	1 4u	10	20u	200	200	125	5.0	TO48
95#	BTX73S200	200	25	60	50m	50m	3.0	3 0m	125	1.7	30	1.4u	10	12u	200	200	125	5.0	TO48
96	TI3039	200 †	25 △	60C	130mØ	100m	4 0	3.0m	125C	2.5	25	2 5u	25	2.9u	200	200	125C	5 Ø	TO48
97	C30B	200	25 △	70C	50m	25m	1 5	3.5m	100J	1.5	50					250	100J	.50	S131
98	C31B	200	25 △	70C	50m	9 0m	1 5	3.5m	100J	1 5	50					250	100J	50	S131
99	C32B	200	25 △	70C	50m	25m	1 5	3.5m	100J	1.5	50					250	100J	.50	M94
100	C33B	200	25 △	70C	50m	9.0m	1 5	3.5m	100J	1.5	50					250	100J	.50	M94
101	C34B1	200	25	70	50m	25m	1 5	1 0m	100	1.5	50		35	20u⊘	20	250	100J	5 0 Ø	M94
102	C34B2	200	25	70	50m	25m	1.5	1.0m	100	1.5	50		35	20u⊘	20	250	100J	5 0 Ø	S131
103#	21RC20	200	25 △	75B	20m	40m	3 0	6 0m		2 2	16	3 0u	10	25u	20	150	125A	5 0 Ø	S141c
104	2N5806	200	25	80	100m$	120m$	4 0 $			1 6	35					200 §	115C	500m†	S18
105#	24TB2	200	25	84B		.10	3 0	7 5m		2 3	31					180	125	1 0	S266
106#	26TB2	200	25	84B		10	3.0	7.5m		2 3	31					180	125	1.0	S63a
107	2N2576	200	25	85C		80m$	3 5 $	2 5mØ	125C	.70 §	16					260 §	125C	50	TO41
108	MCR1907-4	200 △	25	125J	12m	30m	1 5	4.0m	125J	1.7	20	.50u	10	12u⊘	30 §	150	125J	.5 †	TO48
109#	BTX82-200R	200	26	87B	10	80	3 5					5 0		50u		550 *	125J	5 0 Ø	TO48
110#	BTX13/200R	200	30	25$	40m§	50m	3 0			3 5 §	250	4.0u§	10	6.0u§	20 §	300	125J	5.0	S189

SYMBOLS AND CODES EXPLAINED IN INTERPRETER

6. SILICON CONTROLLED RECTIFIERS

IN ORDER OF (1) PEAK REV. VOLT., (2) MAX. CONT. CUR., (3) TEMPERATURE, (4) TYPE No.

LINE No	4 TYPE No.	1 PRV and VBO (V)	MAX. CONT. CURRENT 2 Idc (A)	3 at TEMP (°C)	MAX. HOLD. CUR Ih @ 25°C (A)	MAX. GATE FIRING SPEC at 25°C Igf (A)	Vgf (V)	MAX SAT I Ir@PRV and Is@VBO (A)	at TEMP (°C)	MAX. FWD. VOLT. DROP at 25°C Vf (V)	@ If (A)	SWITCHING TIME at 25°C Ton (s)	for If (A)	Toff (s)	MIN. dV/dt @ 25°C (V/us)	ABS MAX. RATINGS 1Cy PK SURGE I@25°C (A)	MAX TEMP (°C)	MAX GATE POWER (W)	DWG. No.
1#	CR30-02	200	30	50	20	2 0	10		125	1 8	100	4 5u	30	25u	20	350	125	5.0	S314
2#	23TB2	200	31	82B	150m	100m	3.0	7.5m		2 4	63					260	125C	1 0	S266
3#	25TB2	200	31	82B	150m	100m	3 0	7 5m		2 4	63					260	125C	1 0	S63a
4#	CR25-201B	200	32	25	26m	40m	3.0					2 5u	25	150u		210	125	5 0	TO48
5#	8TW2	200	32	75C$	25m	50m	2 0	10m	100J	1 8 §	90	2 5u§	32	20u§		550	150	2 0	
6#	BTX66/200R	200	32	85B	10mØ§	80m	3 0	12m	125J	3.3	500	.50u	50	15u	13	680 *	125J	1 †	TO94
7	C40B△	200	35 △	18B	100m	40m	3 0	8 0m△	25J	2.0 △	50			12u		150	125J	5 0	TO48
8	SCR162A	200 ⧄	35	25C	50m	25m	2.0	4 0m△	125C	2 0	50	1.0u§	200	20u§		200 §	125J	15	TO48
9	SCRF162A	200 ⧄	35	25C	100m	25m	2.0	4 0m△	125C	2.0	50	20u§	10	6.0u§		200 §	125J	15	TO48
10	SCRF1620	200 ⧄	35	25C	100m	40m	3.0	4 0m△	125C	2 0	50	2 0u§	10	12u§		200 §	125J	15	TO48
11	16RC20A	200 ⧄	35 △	35C	20mØ	40m	2 0	6 0mØ	125C	2 3	70 †		10	75u§	25 §	250 △	125J	50 †	TO48
12	16RCF20A	200 ⧄	35 △	35C	20mØ	40m	2.0	2 0mØ	125C	2 3	70 †		10	12u§	25 §	250 △	125	.50 †	TO48
13	18RC20	200 ⧄	35 △	45C	20mØ	40m	2.0	6 0mØ	125C	2 0	70 †					350 △	125J	.50 †	TO48
14	MCR3835-4	200	35	47C	50m	40m	1 5			1 2	35	1 0u	35	15u	50 Ø§	325 §	100J	500m†	M94b
15	MCR3935-4	200	35	47C	50m	40m	1 5			1 2	35	1 0u	35	15u	50 Ø§	325 §	100J	500m	S131k
16	C38B△	200 ⧄	35	56C	80m	40m	3 0	8 0m	25J	2 0 △	50	1 4u	5 0	24u	20	150	150C	12	TO48
17	40681	200	35 △	60C	70m	40m	2.0			25	300	2 0u	30	20u	10	300	100C	500m†	S304
18	NL570B	200	35	62	100m	80m	3 0			1 7	50	1.4u	5.0	30u	200	600	125	500m	
19	22RC20	200 ⧄	35 △	70C	20mØ	40m	2.0	6 0mØ	150C	2 3	70 †				20	225 △	150J	500m†	TO48
20#	TK2FA	200	35	85C		300m	3 0	10m	125J	2 0	100	3 0u§	100	20u§	100 §	700		900m	S317
21#	TK2FB	200	35	85C		300m	3 0	10m	125J	2 0	100	3.0u§	100	40u§	100 §	700		900m	S317
22	C38B⧄	200	35	87C	80m	40m	2 5	5 0m	150J	2.0 †	50	1 4u	5 0	24u§		200	150J	50 †	TO48
23	NLC38B	200	35	90C	80m	40m	2.5	5 0m	150J	2 0	50	1 4u	5 0	24u	20	200	150J	50 †	TO48
24▼	HEPR1473-RT	200	35	100J	10mØ§	10m§										325 §	100		S131r
25▼#	5TCA20	200	35	125	60	100m	3.0							100u	100 §	1.5k	125	10	
26	35C20	200	35	125J	200m§	200m	3.0	10m	125J	2 5	220	10u	35	40u§		900	125J	15 Ø	TO94#△
27	35C20B	200	35	125J	200m§	200m	3 0	10m	125J	2 5	220	10u	35	40u§	100	900	125J	15 Ø	TO94#△
28	35C20BF	200	35	125J	200m§	200m	3 0	10m	125J	2.5	220	10u	35	40u§		900	125J	15 Ø	TO83#△
29	35C20F	200	35	125J	200m§	200m	3.0	10m	125J	2.5	220	10u	35	40u§		900	125J	15 Ø	TO83#△
30#	CR30-203A	200	36	25	66m	60m	3 0			1 4	30	20u	30	73u		500	125	5 0	TO49
31#	CR30-204A	200	36	25	66m	60m	3 0			1.4	30		30	20u		500	125	5 0	TO49
32#	CR30-304DA	200	38	70C	20mØ	80m	3 0	10m†	125C	2 5	100	20u	100	8 0u⧄	20	660	125	5.0 Ø	TO49
33▼#	6TC20	200	40			100m	3 0			1.3		10u		150u	50 §Ø	1.5k*	125J		S183a
34#	2SF732	200	40	70B		40m	3 0	7 0m	125J	1.7	50				100	300	125J	500m	S18c
35#	27TB2	200	40	74B		10	3 0	15m		2.1	78					450	125C	1 0	S63a
36#	T30F200C	200	40	85C	300m	100m	3.0	10m	125J	1 8	100	2.0u⧄	25	25u§	50 §	800 §	125J		S63g%
37#	T30F200E	200	40	85C	300m	100m	3 0	10m	125J	1 8	100	2.0u⧄	25	25u§	50 §	800 §	125J		M351%
38♦	40RCS20	200 ⧄	40	87C	200m	110m	3 0	3 0m	105J	1 7 †	40	4 5u	10		25 §	1 0k§	105J	500m†	S363
39▼#	6TCA20	200	40	125	60	100m	3 0							100u	100 §	1 5k	125	10	
40	251D	200	40	125J		100m	3 0	15m	125J	1 7	50	4 0u	50	100u	300	1 2k*	125J	3 †	Z59
41▼#	SKT45-02AT	200	45	85C	130m	100m	3 0			1 8	50			20u⧄	50 §Ø	800	130A	300m	S354
42▼#	SKT45-02BS	200	45	85C	130m	100m	3 0			1 8	50			15u⧄	50 §	800	130A	300m	S354
43▼#	SKT45-02BT	200	45	85C	130m	100m	3 0			1 8	50			20u⧄	50 §	800	130A	300m	S354
44▼#	SKT45-02CS	200	45	85C	130m	100m	3.0			1 8	50			15u⧄	200 §	800	130A	300m	S354
45▼#	SKT45-02CT	200	45	85C	130m	100m	3 0			1 8	50			20u⧄	200 §	800	130A	300m	S354
46▼#	SKT45-02DS	200	45	85C	130m	100m	3.0			1 8	50			15u⧄	500 §	800	130A	300m	S354
47▼#	SKT45-02DT	200	45	85C	130m	100m	3 0			1 8	50			20u⧄	500 §	800	130A	300m	S354
48▼#	SKT45-02ET	200	45	85C	130m	100m	3.0			1 8	50			20u⧄	1 0k§	800	130A	300m	S354
49	NLE45B	200	45	89C	10	70m	2 5	8 0m	125J	3 0	500	5 0u	50	30u	200	1 2k	125J	.50 †	TO83
50	NLE46B	200	45	89C	10	70m	2.5	8.0m	125J	3 0	500	5 0u	50	30u	200	1 2k	125J	50 †	TO94
51	NLE46C	200	45	89C	10	70m	2.5	8 0m	125J	3 0	500	5.0u	50	30u	200	1.2k	125J	50 †	TO94
52▼#	SKT46-02A	200	45	105C	130m	100m	3.0			1 8	50			50u	50 §Ø	800	150A	300m	S354
53▼#	SKT46-02B	200	45	105C	130m	100m	3 0			1 8	50			50u	50 §	800	150A	300m	S354
54▼#	SKT46-02C	200	45	105C	130m	100m	3 0			1.8	50			50u	200 §	800	150A	300m	S354
55▼#	SKT46-02D	200	45	105C	130m	100m	3 0			1 8	50			50u	500 §	800	150A	300m	S354
56▼#	SKT46-02E	200	45	105C	130m	100m	3 0			1 8	50			50u	1 0k§	800	150A	300m	S354
57#	28TB2	200	47	73B		10	3 0	15m		1 9	95					550	125	1 0	S63a
58#	CR50-02	200	50	50	20	2 0	10		125	1 8	150	4 5u	50	25u	20	650	125	5 0	S142a
59#	2SF1126	200	50	65		100m	3 0	10m	125J	2 3	300		30	30	100	700	125J	500m	S331
60#	BTY95/200R	200	50	75B	10mØ§	80m	3 0	12m	125J	3.3	500	3 0u	50	20u	10	680	125J	5.0	TO49
61	C145B	200	55 △			100m	3 0										125A		S236
62	C146B	200	55 △			100m	3 0							40u⧄			125A		S236
63	C147B	200	55 △			100m	3 0							10u⧄			125A		S236
64#	TK2	200	55	60C	100m	125m	3 0	10m		2 0	100	5.0u	50	30u	20 Ø	700	100C	50	TO49
65#	2SF114	200 ⧄	55	68B		100m	3 5	24m	100J	2 7	500					700	100J	50	S189d
66#	2SF772	200	55	68B		100m	3 5	24m	100J	2 7	500		30	30u	20	700	100	50	S189d
67#	2SF772A	200	55	68B		100m	3 5	24m	100J	2.7	500		30	15u	20	700	100	50	S189d
68#	29TB2	200	55	68B		10	3 0	15m		1 8	110					650	125	1 0	S63a
69	NL576B	200	55	82	500m	150m	3 0			2.4	110				50	700	125	2.0	
70	NL577B	200	55	82C	50	15	3 0	6.0m	125J	2 4	110				200	700	125J	2 0 †	TO103
71	C45B△	200	55 △	85C	100m	75m	3 0	10m	120C	3 1 △	500	5 0u	50	30u§	30 §	700	125J	500m	S315
72	C46B△	200	55 △	85C	100m	75m	3 0	10m	120C	3.1 △	500	5 0u	50	30u§	30 §	700	125J	500m	TO94
73	2191D	200	55	94C		200m	3 0	10m	125J	2.0 §	50	3.5u	50	15u	100	1 2k*	125J	3 †	Z59
74	2192D	200	55	94C		200m	3 0	10m	125J	2 0 §	50	8 0u	50	20u	100	1 2k*	125J	3 †	Z59
75	555B	200	55	99C		150m	3 0								200		125J		TO49
76	556B	200	55	99C		150m	3 0								200		125J		TO83
77#	5TC20	200	55	125	20m	45m	3 0			1 3	50	5.0u	50	25u		500	100J	20	S185
78#	BTX67/200R	200	62	85B	10mØ			12m	125J	2 5	500	50u	50	15u	13	900	125J	1 †	TO94
79#	T50F200	200	62.5	85C	300m	100m	3 0	20m	125J	2 2	160	2 0u⧄	25	30u§	50 §	800 §	125J		M330b%
80	2515D	200	63	120C		10	3 0	15m	150J	1 7	50				300	1 2k	150J		TO83
81#	CR50-203A	200	64	25	73m	100m	3 0									600	125	5 0	TO49
82#	CR50-204A	200	64	25	73m	100m	3 0					5 5u	50	20u		600	125	5 0	TO49
83	2N1913	200	70 △	62C		130m$	3 0 $	6 0mØ	62C	1 9 †	70					1 0k*	125C	50	TO49
84#	CR70B4	200	70	74C		70m	3 0	6 0m	125J	1 7	220				10 △	1.5k△	125J	5 0 Ø	S189d
85#	36TB2	200	70	75B		15	3.0	15m		2 0	140					760	125	1 0	S63d
86	2N4362	200	70	82C	200m	250m$	5 0 $	10m	125C	2 0 †	70				100	1.6k*§	125C	15 Ø	TO94
87	2N4372	200	70	82C	200m	250m$	5 0 $	10m	125C	2.0 †	70				100	1.6k*§	125C	15 Ø	TO83
88#	CR70C4	200	70	83C		100m	3.0	15m	125J	1.8	220 §				100 △	1 5k△	125J	5 0 Ø	S332
89#	CR70CX4	200	70	83C		100m	3.0	15m	125J	1 8 †	220			30 §	100 §	1.5k	125J	5 0 Ø	S237f
90#	CR70CY4	200	70	83C		100m	3.0	15m	125J	1 8 †	220			15 §	100 §	1.5k	125J	5 0 Ø	S237f
91	2N2027	200	70 △	85C		150m$	3 0 $	6 0mØ	85C	1 9 †	70					1 0k*	150C	50	TO49
92#	BTY99/200R	200	70	85B	10mØ§	70m	3 0	12m	125J	2 5	500	3 0u	50	20u	10	900	125J	5 0	TO49
93▼#	SKT70-02AU	200	70	85C	150m	150m	3.0			1 8	60			25u⧄	50 §Ø	1.7k	130A	500m	S260c
94▼#	SKT70-02BT	200	70	85C	150m	150m	3 0			1 8	60			20u⧄	50 §	1 7k	130A	500m	S260c
95▼#	SKT70-02BU	200	70	85C	150m	150m	3 0			1.8	60			25u⧄	50 §	1 7k	130A	500m	S260c
96▼#	SKT70-02CT	200	70	85C	150m	150m	3 0			1 8	60			20u⧄	200 §	1 7k	130A	500m	S260c
97▼#	SKT70-02CU	200	70	85C	150m	150m	3 0			1 8	60			25u⧄	200 §	1.7k	130A	500m	S260c
98▼#	SKT70-02DT	200	70	85C	150m	150m	3 0			1 8	60			20u⧄	500 §	1 7k	130A	500m	S260c
99▼#	SKT70-02DU	200	70	85C	150m	150m	3 0			1 8	60			25u⧄	500 §	1 7k	130A	500m	S260c
100▼#	SKT70-02EU	200	70	85C	150m	150m	3 0			1 8	60			25u⧄	1.0k§	1 7k	130A	500m	S260c
101#	TK120FA	200	70	85C		300m	3 0	10m	125J	2 0	200	3.0u§	100	20u§	100 §	1 0k		900m	S317
102#	TK120FB	200	70	85C		300m	3 0	10m	125J	2 0	200	3 0u§	100	40u§	100 §	1 0k		900m	S317
103▼#	SKT71-02A	200	70	105C	150m	150m	3 0			1 8	60			70u	50 §Ø	1 7k	150A	500m	S260c
104▼#	SKT71-02B	200	70	105C	150m	150m	3 0			1 8	60			70u	50 §	1 7k	150A	500m	S260c
105▼#	SKT71-02C	200	70	105C	150m	150m	3 0			1 8	60			70u	200 §	1.7k	150A	500m	S260c
106▼#	SKT71-02D	200	70	105C	150m	150m	3 0			1 8	60			70u	500 §	1 7k	150A	500m	S260c
107▼#	SKT71-02E	200	70	105C	150m	150m	3 0			1 8	60			70u	1 0k§	1 7k	150A	500m	S260c
108▼#	10TCA20	200	70	125	100	100m	3 0							100u	100 §	1 5k	125	10	
109	70C20	200	70	125J	200m§	200m	3 0	10m	125J	1 8	220	10u	70	40u§		1 6k	125J	15 Ø	TO94#△
110	70C20F	200	70	125J	200m§	200m	3 0	10m	125J	1 8	220	10u	70	40u§		1 6k	125J	15 Ø	TO83#△

SYMBOLS AND CODES EXPLAINED IN INTERPRETER

6. SILICON CONTROLLED RECTIFIERS

IN ORDER OF (1) PEAK REV. VOLT., (2) MAX. CONT. CUR., (3) TEMPERATURE, (4) TYPE No.

LINE No	4 TYPE No	1 PRV and VBO (V)	MAX. CONT. CURRENT 2 Idc (A)	3 at TEMP (°C)	MAX. HOLD. CUR Ih @ 25°C (A)	MAX. GATE FIRING SPEC at 25°C Igf (A)	Vgf (V)	MAX SAT I Ir@PRV and Is@VBO (A)	at TEMP (°C)	MAX. FWD. VOLT. DROP at 25°C Vf (V)	@ If (A)	SWITCHING TIME at 25°C Ton (s)	for If (A)	Toff (s)	MIN. dV/dt @ 25°C (V/us)	ABS. MAX. RATINGS 1Cy PK SURGE I@25°C (A)	MAX TEMP (°C)	MAX GATE POWER (W)	DWG. No.
1#	SF50D11	200	79 △	85C	150m	100m	3.0	8 0m	125	1.7 §	150	6 0u	50		15	1 0k	125J	5 0	S189f
2#	SH50D11	200	79	85C	150m	100m	3.0	8 0m	125J	1 7 §	150	6 0u	50	20u§	100	1.0k	125J	50 †	S189f
3▼#	12TC20	200	80		100m	100m	3.0			1.5		10u		150u	50 §	1.5k*	125J		S183b
4	TCR2050	200	80	70C	25mØ	50m	3 0	4 0mØ	100C	75 Ø	50 §	4 5u		18u		1.0k	125C	1.0	S147
5	36RC20A	200 ⊠	80 △	75C	20 Ø	700m	2 5	6 0mØ	125C	2.2 †	160					850 △	125J	2.0 †	TO94
6	36RCF20A	200 ⊠	80 △	75C	20 Ø	700m	2.5	6 0mØ	125C	2.2 †	160		50	20 §		850 △	125J	2.0 †	TO94
7	37RC20A	200 ⊠	80 △	75C	20 Ø	700m	2 5	6 0mØ	125C	2.2 †	160					850 △	125J	2.0 †	TO83
8	37RCF20A	200 ⊠	80 △	75C	20 Ø	700m	2 5	6 0mØ	125C	2 2 †	160			20 §		850 △	125J	2.0 †	TO83
9	51RCG20	200 ⊠	80 △	75C	100m	150m	2.5	15mØ	125C	2 5 †	160		50	20u	100 §	1.2k△	125J	3.0 †	TO94
10	52RCG20	200 ⊠	80 △	75C	100m	150m	2.5	15mØ	125C	2 5 †	160			20u	100 §	1 2k△	125J	3.0 †	TO83
11#	CR80-02	200	80	75C	60m	100m	3 0	15m	100J	1 7	250	4 5u	80	30u		800	100	5.0	S284
12#	2SF124	200 ⊠	80	78B		100m	3.5	24m	125J	2 3	500					1.0k	125J	.50	S189d
13#	2SF782	200	80	78B		100m	3 5	24m	125J	2 3	500		50	30u	20	1.0k	125	.50	S189d
14#	2SF782A	200	80	78B		100m	3 5	24m	125J	2.3	500		50	15u	20	1 0k	125	.50	S189d
15#	51RC20	200	80 △	84B	50m	70m	2.5	6 0		2 2	50	4.5u	50	60u	20	700	125A	5.0 Ø	S237c
16▼#	12TCA20	200	80	125	100	100m	3.0							100u	100 §	1.5k	125	10	
17	250D	200	80	125J		100m	3.0	15m	125J	1 3	50	4 0u	50	100u	300	1.6k*	125J	3 †	Z59
18#	37TB2	200	85	66B		.15	3 0	15m		1 9	175					930	125	1.0	S63d
19▼#	SKT90-02AU	200	90	85C	150m	150m	3 0			1.6	110			25u⊠	50 §Ø	2.2k	130A	500m	S260c
20▼#	SKT90-02BU	200	90	85C	150m	150m	3.0			1 6	110			25u⊠	50 §	2.2k	130A	500m	S260c
21▼#	SKT90-02CU	200	90	85C	150m	150m	3 0			1 6	110			25u⊠	200 §	2.2k	130A	500m	S260c
22▼#	SKT90-02DU	200	90	85C	150m	150m	3 0			1 6	110			25u⊠	500 §	2.2k	130A	500m	S260c
23▼#	SKT90-02EU	200	90	85C	150m	150m	3 0			1 6	110			25u⊠	1 0k§	2 2k	130A	500m	S260c
24▼#	SKT91-02A	200	90	105C	150m	150m	3 0			1 6	110			70u	50 §Ø	2.2k	150A	500m	S260c
25▼#	SKT91-02B	200	90	105C	150m	150m	3 0			1 6	110			70u	50 §	2.2k	150A	500m	S260c
26▼#	SKT91-02C	200	90	105C	150m	150m	3 0			1 6	110			70u	200 §	2.2k	150A	500m	S260c
27▼#	SKT91-02D	200	90	105C	150m	150m	3 0			1 6	110			70u	500 §	2.2k	150A	500m	S260c
28▼#	SKT91-02E	200	90	105C	150m	150m	3.0			1 6	110			70u	1.0k§	2 2k	150A	500m	S260c
29#	TT2FA	200	95	85C		500m	3 0	25m	125J	2 0	350	3 0u§	100	20u§	100 §	2 0k		1.5	S204a
30#	TT2FB	200	95	85C		500m	3 0	25m	125J	2 0	350	3.0u§	100	40u§	100 §	2.0k		1.5	S204a
31#	CR100-02	200	100	50	20	2 0	10		125	1 7	350	45u	100	25u	20	1.0k	125	5 0	S267c
32#	38TB2	200	100	62B		15	3 0	15m		1 8	205					1.0k	125	1 0	S63d
33#	FT101BX4	200	100	93C		150m	2 0	15m	125J	1.2	100 §		100	30u⊠	100 △	2.0k△	125J	16 Ø	M568a
34	100C20	200	100	125J	200m	200m	2 5	25m	125J	2.0	500	10u	100	40u§		2.0k	125J	10 Ø	TO93#△
35	100C20B	200	100	125J	200m	200m	2 5	25m	125J	2.0	500	10u	100	40u§	100	2.0k	125J	10 Ø	TO93#△
36	C154B△	200	110 △		500m	500m	4 0	15m	25C	3.0 †	500 †		50	7.0u§	200 §	1.2k	125J	2.0 Ø	TO94
37	C155B△	200	110 △		500m	500m	4 0	15m	25C	3.0 †	500 †		50	12u§	100 §	1 2k	125J	2 0 Ø	TO94
38	C156B△	200	110 △		500m	500m	4 0	15m	25C	3.0 †	500 †		50	7.0u§	200 §	1 2k	125J	2 0 Ø	S315
39	C157B△	200	110 △		500m	500m	4 0		25C	3 0 †	500 †		50	12u§	100 §	1.2k	125J	2.0 Ø	S315
40♦	JAN2N1795	200	110	60C	40m	70m	3 0	15m	125A	1 8	150	15u	50	40u		1.0k	125A	500m	TO83
41♦	JAN2N1913	200	110	60C	40m	70m	3.0	15m	125A	1.8	150	15u	50	40u		1 0k	125A	500m	TO49
42	2541D	200	110	60C		200m	3 0	10m	125J	1.7 §	50	3.5u	50	15u		1.4k*	125J	3.0 †	Z59
43	2542D	200	110	60C		200m	3.0	10m	125J	1.7 §	50	8.0u	50	20u	100	1 4k*	125J	3 0 †	Z59
44	C55B△	200	110 △	60C	100m	75m	3 0	10m	125J	2.5	500	5.0u	50	30u§	20 §	1.0k	125J	5.0	S91
45	C56B△	200	110 △	60C	100m	75m	3 0	10m	125J	2 5	500	5.0u	50	30u§	20 §	1.0k	125J	5.0	S108
46#	TK120	200	110	60C	100m	125m	3 0	10m		2.0	200	4.5u	50	20u	40 §Ø	1 0k	125C	.50	TO49
47	71RC20A	200 ⊠	110 △	62C	20mØ	70m	2 5	6 5mØ	125J	1.9 †	220		50	30u§		1.0k△	125J	.5 †	TO94
48	71RCF20A	200 ⊠	110 △	62C	20mØ	70m	2.5	6.5mØ	125J	1.9 †	220		50	20u§	25 △	1.0k△	125J	.50 †	TO94
49	72RC20A	200 ⊠	110 △	62C	20mØ	70m	2 5	6.5mØ	125J	1.9 †	220		50	30u§		1 0k△	125J	.5 †	TO83
50	72RCF20A	200 ⊠	110 △	62C	20mØ	70m	2 5	6.5mØ	125J	1.9 †	220		50	20u§	25 △	1 0k△	125J	.50 †	TO83
51	71RCG20	200 ⊠	110 △	75C	100m	150m	2 5	15mØ	125C	2.4 †	220		50	15u	100 §	1 4k	125J	3 0 †	TO94
52	72RCG20	200 ⊠	110 △	75C	100m	150m	2.5	15mØ	125C	2 4 †	220			15u	100 §	1.4k△	125J	3 0 †	TO83
53#	71RC20	200	110 △	79B	50m	70m	2 5	6.0m		1 9	70	4.5u	50	70u	20	1 0k	125A	5.0 Ø	S237c
54	NLE155B	200	110	83C	50	15	2 5	8.0m	125J	3 0	500	5.0u	50	20u	200	1 4k	125J	2.0 †	TO94
55	NLE157B	200	110	83C	50	15	2.5	8.0m	125J	3.0	500	5.0u	50	20u	200	1 4k	125J	2.0 †	TO83
56	NLF154B	200	110	83C	500m	200m	2 5	8.0m	125J	3 0 †	500	5.0u	50	10u⊠	200	1 4k	125J	2 0 †	TO94
57	NLF155B	200	110	83C	500m	200m	2 5	8.0m	125J	3.0 †	500	5.0u	50	20u⊠	200	1 4k	125J	2.0 †	TO94
58	NLF156B	200	110	83C	500m	200m	2 5	8 0m	125J	3 0 †	500	5 0u	50	10u⊠	200	1 4k	125J	2.0 †	TO83
59	NLF157B	200	110	83C	500m	200m	2 5	8 0m	125J	3.0 †	500	5.0u	50	20u⊠	200	1.4k	125J	2.0 †	TO83
60	71RC20B	200 ⊠	110 △	85C	20mØ	70m	2.5	6.0mØ	150J	2 2 †	220		50	40u§		1 0k△	150J	.5 †	TO94
61	72RC20B	200 ⊠	110 △	85C	20mØ	70m	2 5	6 0mØ	150J	2 2 †	220		50	40u§		1 0k△	150J	.5 †	TO83
62▼#	SKT110-02AV	200	110	85C	200m	200m	3 0			1 6	70			30u⊠	50 §Ø	2.8k	130A	1.0	S260d
63▼#	SKT110-02BT	200	110	85C	200m	200m	3 0			1 6	70			20u⊠	50 §	2.8k	130A	1.0	S260d
64▼#	SKT110-02BV	200	110	85C	200m	200m	3 0			1 6	70			30u⊠	50 §	2 8k	130A	1 0	S260d
65▼#	SKT110-02CT	200	110	85C	200m	200m	3 0			1.6	70			20u⊠	200 §	2.8k	130A	1 0	S260d
66▼#	SKT110-02CV	200	110	85C	200m	200m	3 0			1.6	70			30u⊠	200 §	2.8k	130A	1.0	S260d
67▼#	SKT110-02DT	200	110	85C	200m	200m	3 0			1 6	70			20u⊠	500 §	2.8k	130A	1 0	S260d
68▼#	SKT110-02DV	200	110	85C	200m	200m	3 0			1.6	70			30u⊠	500 §	2 8k	130A	1 0	S260d
69▼#	SKT110-02EV	200	110	85C	200m	200m	3 0			1 6	70			30u⊠	1 0k§	2.8k	130A	1.0	S260d
70	JAN2N2027	200	110	87C	40m	130m	3 0	15m	150C	1.6	200	5 0u⊠	70	150u⊠	20 △	1.0k	150A	500m†	S104b
71	C62B△	200	110 △	87C	100m	75m	3 0	15m	145C	2.5 △	1 5k	5.0u	50	50u		1.0k	150J	500m	S315
72	NLE150B	200	110	89C	50	15	2 5	8 0m	125J	2.6	500	8.0u	50	150u	200	1.6k	125J	2.0 †	TO94
73	NLE152B	200	110	89C	50	15	2 5	8 0m	125J	2.6	500	8.0u	50	150u	200	1.6k	125J	2.0 †	TO83
74	NLH150B	200	110	89C	.50	15	2 5	8.0m	125J	2.6	500	8 0u	50	150u	200	1.6k	125J	2 0 †	TO94
75	NLH152B	200	110	89C	50	15	2 5	8 0m	125J	2 6	500	8 0u	50	150u	200	1 6k	125J	2.0 †	TO83
76	C60B	200	110	100C	100m	70m	2 5	8 0m	125J	2 5 †	500	5 0u	50	50u§		1.6k	150J	.5 †	TO49
77	C62B⊠	200	110	100C	100m	70m	2 5	8 0m	125J	2.5 †	500	5.0u	50	50u§		1.6k	150J	50 †	TO83
78	NLC62B	200	110	103C	10	70m	2.5	8 0m	150J	2 5	500	5.0u	50	50u		1.6k	150J	.50 †	TO83
79▼#	SKT111-02A	200	110	105C	200m	200m	3 0			1 6	70			80u	50 §Ø	2.8k	150A	1.0	S260d
80▼#	SKT111-02B	200	110	105C	200m	200m	3.0			1.6	70			80u	50 §	2 8k	150A	1.0	S260d
81▼#	SKT111-02C	200	110	105C	200m	200m	3.0			1 6	70			80u	200 §	2.8k	150A	1.0	S260d
82▼#	SKT111-02D	200	110	105C	200m	200m	3 0			1.6	70			80u	500 §	2.8k	150A	1.0	S260d
83▼#	SKT111-02E	200	110	105C	200m	200m	3.0			1 6	70			80u	1.0k§	2 8k	150A	1.0	S260d
84#	10TC20	200	110	125J	20m	60m	3.0			1.5	110	5 0u	110	25u		1.1k	125J	20	S185
85#	T95F200	200	115	85C	300m	100m	3 0	30m	125J	1.8	300	2 5u⊠	50	30u§	50 §	2 0k§	125J		M330a%
86#	2SF344	200	120	25C		100m	3 0	13m	125C	1.2 △	60					1 0k	125	10 Ø	S142
87#	CR120-02	200	120	75C	60m	100m	3.0	15m	125J	2.1	370	4.5u	120	40u		1.0k	125	5.0	S284
88	2505D	200	125	95C		10	3 0	15m	150J	1.3	50				300	1 6k	150J		TO83
89#	2SF812	200	126 △	85C	200m	150m	3.0	15m	125	1 7 §	250	6 0u	80		15	1.6k	125J	5.0	S267b
90#	SH80D11	200	126	85C	200m	150m	3 0	15m	125	1.7 §	250	6.0u	80	20u§	100	1.6k	125J	.50 †	S267b
91#	42TB2	200	135	57B		20	3 0	15m		2 2	265					1 4k	125	1.5	M308
92♦#	30TC20	200	140		150m	100m	3 0			1 5					50 §Ø	3 5k*	125J		S348
93▼#	SKT140-02AV	200	140	85C	200m	200m	3.0			1.6	200			30u⊠	50 §Ø	3.9k	130A	1.0	S260d
94▼#	SKT140-02BV	200	140	85C	200m	200m	3.0			1.6	200			30u⊠	50 §	3 9k	130A	1.0	S260d
95▼#	SKT140-02CV	200	140	85C	200m	200m	3.0			1.6	200			30u⊠	200 §	3 9k	130A	1.0	S260d
96▼#	SKT140-02DV	200	140	85C	200m	200m	3.0			1.6	200			30u⊠	500 §	3.9k	130A	1 0	S260d
97▼#	SKT140-02EV	200	140	85C	200m	200m	3 0			1.6	200			30u⊠	1 0k§	3.9k	130A	1.0	S260d
98▼#	SKT141-02A	200	140	105C	200m	200m	3 0			1.6	200			80u	50 §Ø	3.9k	150A	1 0	S260d
99▼#	SKT141-02B	200	140	105C	200m	200m	3.0			1.6	200			80u	50 §	3.9k	150A	1 0	S260d
100▼#	SKT141-02C	200	140	105C	200m	200m	3 0			1 6	200			80u	200 §	3 9k	150A	1 0	S260d
101▼#	SKT141-02D	200	140	105C	200m	200m	3 0			1.6	200			80u	500 §	3 9k	150A	1 0	S260d
102▼#	SKT141-02E	200	140	105C	200m	200m	3 0			1 6	200			80u	1 0 §	3 9k	150A	1 0	S260d
103▼#	20TCA20	200	140	125	150	100m	3 0							100u	100 §	3 0k	125	10	
104#	TT2	200	150	60C	300m	500m	3 0	25m	100J	2 2	350	5 0u	15		20 §Ø	2 0k	100C	1 0	S204
105	2N2505	200	150 △	80C	50m	150m§	3 0 §	10m	80C	1 4 †	150					3 5k*	125C	20 †	TO93
106	2N2544	200	150	80C	50m§	150m§	3 0 §	7.5m	80C	1 5	150				4 0	3 5k§	125C	2 0 †	TO93
107#	CR150BX4	200	150	81C		300m	3 0	15mØ	125J	1 9	500			30u⊠	100 △	4 0k	125J	16 Ø	S237a
108#	CR150BY4	200	150	81C		300m	3 0	15mØ	125J	1 9	500			15u	100 △	4 0k	125J	16 Ø	S237a
109#	FT150BX4	200	150	81C		300m	3 0	15m	125J	1 9	500		150	30u⊠	100 △	4 0k△	125J	16 Ø	M567
110#	FT150BY4	200	150	81C		300m	3 0	15m	125J	1 9	500		150	15u⊠	100 △	4.0k△	125J	16 Ø	M567

SYMBOLS AND CODES EXPLAINED IN INTERPRETER

6. SILICON CONTROLLED RECTIFIERS

IN ORDER OF (1) PEAK REV. VOLT., (2) MAX. CONT. CUR., (3) TEMPERATURE, (4) TYPE No.

LINE No	4 TYPE No.	1 PRV and VBO (V)	MAX. CONT. CURRENT 2 Idc (A)	3 at TEMP (°C)	MAX. HOLD. CUR Ih @ 25°C (A)	MAX. GATE FIRING SPEC at 25°C Igf (A)	Vgf (V)	MAX SAT I Ir@PRV and Is@VBO (A)	at TEMP (°C)	MAX. FWD. VOLT DROP at 25°C Vf (V)	@ If (A)	SWITCHING TIME at 25°C Ton (s)	for If (A)	Toff (s)	MIN. dV/dt @ 25°C (V/us)	ABS. MAX. RATINGS 1Cy PK SURGE I@25°C (A)	MAX TEMP (°C)	MAX GATE POWER (W)	DWG. No
1#	TT220FA	200	150	85C		500m	3 0	25m	125J	2 0	450	3 0u§	100	20u§	100 §	3 2k		1 5	S204a
2#	TT220FB	200	150	85C		500m	3 0	25m	125J	2 0	450	3 0u§	100	40u§	100 §	3 2k		1 5	S204a
3#	FT151BX4	200	150	87C		150m	2 0	15m	125J	1 3	150 §		150	30u⊘	100 △	4.0k△	125J	16 ∅	M567
4	150C20	200	150	125J	200m	200m	2 5	25m	125J	1 7	500	10u	150	40u§		3 0k	125J	10 ∅	TO93#△
5	150C20B	200	150	125J	200m	200m	2 5	25m	125J	1 7	500	10u	150	40u§	100	3 0k	125J	10 ∅	TO93#△
6	101RC20	200 ⊘	160 △	80C	50m∅	150m	2 5	10m∅	125J	1 7 †	314		150	25u§		2 0k△	125J	2 †	TO93
7▼#	SKT170-02AY	200	170	85C	200m	250m	3 0			1.6	500			45u⊘	50 §∅	6 6k	130A	1 0	S355
8▼#	SKT170-02BV	200	170	85C	200m	250m	3 0			1.6	500			30u⊘	50 §	6 6k	130A	1 0	S355
9▼#	SKT170-02BY	200	170	85C	200m	250m	3 0			1 6	500			45u⊘	50 §	6.6k	130A	1.0	S355
10▼#	SKT170-02CV	200	170	85C	200m	250m	3 0			1.6	500			30u⊘	200 §	6 6k	130A	1 0	S355
11▼#	SKT170-02CY	200	170	85C	200m	250m	3 0			1 6	500			45u⊘	200 §	6.6k	130A	1 0	S355
12▼#	SKT170-02DV	200	170	85C	200m	250m	3 0			1 6	500			30u⊘	500 §	6 6k	130A	1.0	S355
13▼#	SKT170-02DY	200	170	85C	200m	250m	3 0			1.6	500			45u⊘	500 §	6 6k	130A	1.0	S355
14▼#	SKT170-02EY	200	170	85C	200m	250m	3 0			1 6	500			45u⊘	1 0k§	6 6k	130A	1.0	S355
15▼#	SKT171-02A	200	170	105C	200m	250m	3 0			1 6	500			100u	50 §∅	6 6k	150A	1 0	S355
16▼#	SKT171-02B	200	170	105C	200m	250m	3 0			1 6	500			100u	50 §	6 6k	150A	1 0	S355
17▼#	SKT171-02C	200	170	105C	200m	250m	3 0			1 6	500			100u	200 §	6 6k	150A	1.0	S355
18▼#	SKT171-02D	200	170	105C	200m	250m	3 0			1 6	500			100u	500 §	6.6k	150A	1.0	S355
19▼#	SKT171-02E	200	170	105C	200m	250m	3 0			1 6	500			100u	1 0k§	6 6k	150A	1 0	S355
20#	43TB2	200	175	62B		20	3 0	15m		2 2	390					1 9k	125	1 5	M308
21▼#	2SF1142	200	175	75C		300m	3 0	15m	125J	1 7 §	500				100 △	4.0k△	125J	16 ∅	S237e
22#	CR150F4	200	175	75C		300m	3 0	15m	125J	1 7 §	500				100 §	4 0k	125J	16 ∅	S237e
23#	FT150B4	200	175	75C		300m	3 0	15m	125J	1 7	500 §				100 △	4.0k△	125J	16 ∅	M567
24	2N3886	200	175	80	200m	400m	4 0	15m	125	1 8	175					4 5k	125	3 0	TO93
25	C350B	200	175	82C	50	15	2 5	8.0m	125J	2 6	500	8.0u	50	100u	200	1 8k	125J	2 0 †	
26	2201D	200	175	125J		300m	4 0	15m	125J	1 3 §	100	4 0u	100	30u		4 0k*	125J	3.0 †	TO93
27	2202D	200	175	125J		300m	4 0	15m	125J	1.3 §	100	8 0u	100	40u		4.0k*	125J	3 0 †	TO93
28#	46TB2	200	195	56B		20	3 0	15m		2 0	390					2 1k	125	1 5	M308
29#	2SF312	200 ⊘	200	62B		125m	2 5	45m	125J	2 1	1 0k					3 5k	125J	1 0	S167
30#	2SF792	200	200	62B		125m	3 0	45m	125J	2 1	1 0k		100	40u	20	3 5k	125J	1.0	S167
31#	2SF792A	200	200	62B		125m	3 0	45m	125J	2.1	1.0k		100	20u	20	3 5k	125J	1 0	S167
32	261D	200	200	80		15	3 0	15m	125J	1 4	100				300	3 3k	125		TO93
33	2181D	200	200	80C		300m	4 0	15m	125J	1 3 §	100	4 0u	100	20u	100	3 3k*	125J	3 †	TO93
34	2182D	200	200	80C		300m	4 0	15m	125J	1.3 §	100	8 0u	100	30u	100	3 3k*	125J	3 †	TO93
35	263D	200	200	85		15	3 0	15m	125J	1.3	50				300	1 6k	125		M414
36#	TT320	200	200	85C	40m∅	500m	3 0	25m	125J	1 6	600	5 0u§		100u§	100 ∅§	4 0k		1 5	S204a
37#	V2051E	200	200	90		125m	5 0	20m	125J	1 8	1 0k		200	25	100	4 0k	125J	10	M414b
38	2615D	200	200	105		15	3 0	15m	150J	1 4	100				200	3 3k	150		TO93
39▼#	30TCA20	200	200	125	150	100m	3 0								100 §	5 5k	125	10	
40#	47TB2	200	220	50B		20	3 0	15m		1 9	440					2.4k	125	1 5	M308
41▼#	SKT220-02AY	200	220	85C	200m	250m	3 0			1 6	800			45u⊘	50 §∅	7 8k	130A	1 0	S355
42▼#	SKT220-02BY	200	220	85C	200m	250m	3 0			1 6	800			45u⊘	50 §	7 8k	130A	1 0	S355
43▼#	SKT220-02CY	200	220	85C	200m	250m	3 0			1 6	800			45u⊘	200 §	7 8k	130A	1 0	S355
44▼#	SKT220-02DY	200	220	85C	200m	250m	3 0			1 6	800			45u⊘	500 §	7 8k	130A	1 0	S355
45▼#	SKT220-02EY	200	220	85C	200m	250m	3 0			1 6	800			45u⊘	1 0k§	7.8k	130A	1 0	S355
46▼#	SKT221-02A	200	220	105C	200m	250m	3 0			1 6	800			100u	50 §∅	7 8k	150A	1 0	S355
47▼#	SKT221-02B	200	220	105C	200m	250m	3 0			1 6	800			100u	50 §	7 8k	150A	1 0	S355
48▼#	SKT221-02C	200	220	105C	200m	250m	3 0			1 6	800			100u	200 §	7 8k	150A	1.0	S355
49▼#	SKT221-02D	200	220	105C	200m	250m	3 0			1 6	800			100u	500 §	7 8k	150A	1.0	S355
50▼#	SKT221-02E	200	220	105C	200m	250m	3 0			1 6	800			100u	1 0k§	7 8k	150A	1 0	S355
51#	20TC20	200	220	125	50m	100m	3 0			1 5	200	5 0u	200	30u		2 5k	125J	20	S183
52#	2SF822	200	230	85B		100m	2 5	45m	125J	1.8	1.0k					4 0k	125J	10	S167
53	C185M	200	235 △		500m	300m	3 0	10m	25C	2 8 †	1.5k†		250	15u§	200 §	3 5k	125J	2.0 †	TO93
54	NLF185B	200	235 △		500m	150m	2 5		125J	2.8	1 5k	8 0u	100	15u	200	3 5k	125J	2.0 †	TO93
55	151RC20	200 ⊘	235 △	62C	50m∅	100m	2.5	10m∅	125J	1 7 †	471		150	25u§		3 0k△	125J	2 †	TO93
56	151RB20	200 ⊘	235 △	75C	500m	150m	2.5	20m	125J	2 2 †	471	2 0u	150	40u§	200 △	2 5k△	125J	2 †	TO93
57#	SH150D11	200	235	76C	200m	150m	3.0	20m	125	1 5	500	6 0u	150	30u§	50	3 2k	125	3.0 †	S91b
58	151RC20A	200 ⊘	235 △	80C	50m∅	100m	2 5	10m∅	125J	1 4 †	471		150	40u§		3 5k△	125J	2 †	TO93
59▼	151RF20	200 ⊘	235	80C	200m	200m	2.5	15m	125C	1 9 †	471		250	20u§	200 §	4 2k△	125J	3.0 †	TO93
60	C180B△	200	235 △	80C	500m	150m	3 0	10m	25	2 9 †	1.5k	8 0u	100	30u	200	3 5k	125C	2.0	TO93
61	C185B△	200	235 △	80C	500m	300m	3 0	10m	25	2 9 †	1 5k	8 0u	100	15u	200	3 5k	125C	2 0	TO93
62	NLF180B	200	235 △	80C	500m	150m	2 5	6 0m	125J	2 8	1 5k	8 0u	100	80u	200	3 5k	125J	2 0 †	TO93
63#	TT220	200	235	80C	250m	500m	3 0	25m	125J	1 7	450	5.0u	15	20u	100 §∅	3 2k	125C	1 0	S204
64	151RA20	200 ⊘	235 △	85C	500m	150m	2.5	20m	125J	1 8 †	471	2 0u	150	60u§	200 △	3 5k△	125J	2 †	TO93
65#	BTX46/200R	200	235 △	110J	300m§	300m	3 0	10m	110J	1 5 §	500	8 0u§	200	150u	100 ∅§	3 0k*	110J	10 ∅	S228
66#	CR250GX4	200	250	50C		350m	4 0	15m	125J	1 9	780 §		250	30u⊘	100 △	5 0k△	125J	16 ∅	M569
67#	CR250GY4	200	250	50C		350m	4 0	15m	125J	1 9	780 §		250	15u⊘	100 △	5.0k△	125J	16 ∅	M569
68#	FT250BX4	200	250	52C		350m	4 0	15m	125J	1 9	780 §		250	30u⊘	100	5.0k△	125J	16 ∅	M567
69#	FT250BY4	200	250	52C		350m	4 0	15m	125J	1.9	780 §		250	15u⊘	100 △	5.0k△	125J	16 ∅	M567
70#	CR250AX4	200	250	61C	30m	350m	4 0	15m	125J	1 9	780 §		250	30u⊘	100 △	5 0k△	125J	16 ∅	S158b
71#	CR250AY4	200	250	61C	30m	350m	4 0	15m	125J	1 9	780 §		250	30u⊘	100 △	5 0k△	125J	16 ∅	S158b
72#	FT251BX4	200	250	62C		150m	2 0	15m	125J	1.2	250 §		250	30u⊘	100 △	5 0k△	125J	16 ∅	M567
73#	2SF536	200	250	65C		350m	4 0	15m∅	125J	1.8	780				10 △	5 0k	125J	16 ∅	S158b
74#	CR250F4	200	250	65C		350m	4 0	15m	125J	1 8 §	780				100 §	5 0k	125J	3 0 †	S158e
75	2N3355	200	250	80C	200m§	400m§	4.0 §	15m	125C	2 0 §	250					5.0k§*	125C	3 0 †	TO108
76▼#	TY180NP2K2	200	260	70B	50m	200m	3 5	29m	125J	1 0	600	10u⊘	500	20n⊘	20 §	4 3k	125J	1 5 †	S375
77▼#	TY180QP2K2	200	260	70B	50m	200m	3 5	29m	125J	1.6	600	10u⊘	500	30u⊘	20 §	4 3k	125J	1 5 †	S375
78#	61TB2	200	275	67B		.30	3 0	40m		2.4	665					3.2	125	2 0	M308a
79	260D	200	275	80		15	3 0	15m	125J	1 2					300	3.3k	125		TO93
80	2605D	200	275	105		15	3 0	15m	150J	1 2	100				300	5 0k	125		TO93
81♦#	40TC20	200	300		150m	100m	3 0			1 5					50 §∅	4 5k*	125J		S348
82#	CR300AW4	200	300	11A	30m∅	350m	4 0	15m	125J	1.9 §	780			50 §	100 §	5 0k	125J	16 ∅	S300
83#	CR300AX4	200	300	11A	30m∅	350m	4 0	15m	125J	1.9 §	780			30 §	100 §	5.0k	125J	16 ∅	S300
84#	CR300AY4	200	300	11A	30m∅	350m	4 0	15m	125J	1 9 §	780			15 §	100 §	5.0k	125J	16 ∅	S300
85▼#	2SF923	200	300	15A		350m	4 0	15m	125J	1 8 §	780				100 △	5 0k△	125J	16 ∅	S300
86#	CR300F4	200	300	15A		350m	4 0	15m	125J	1 8 §	780				100 §	5.0k	125J	16 ∅	S300
87	273D	200	300	70		15	3 0	15m	125J	1 3	100				300	3 3k	125		M414
88#	FT300C4	200	300	73C		350m	4 0	30m	150J	1.7	950 §				50 △	5.0k△	150J	16 ∅	M567
89#	FT301AX4	200	300	74C		150m	2 0	15m	125J	1.2	300 §		300	30u⊘	100 △	6 0k△	125J	16 ∅	M567a
90▼#	FT300A4	200	300	81C		200m	3.0	30m	125J	1 6	940 §				200 △	6.0k△	125J	16 ∅	M567a
91▼#	40TCA20	200	300	125	150	100m	3 0								100 §	5 5k	125	10	
92	2231D	200	300	125J		300m	4 0	15m	125J	1 3 §	100	4 0u	100	30u	100	4 5k*	125J	3 0 †	M247
93	2232D	200	300	125J		300m	4 0	15m	125J	1 3 §	100	8.0u	100	40u					
94	2248D	200	300	125J		300m	4 0	10m	125J	1 0 §	100	5 0u	150	50u		5 0k*			M308c
95#	62TB2	200	315	65B		30	3 0	40m		2.2	665					3.7k	125	2.0	M308a
96#	BTX41/200R	200	315 △	110J	300m§	300m	3 0	10m	110J	1 5 §	600	8 0u§	200	150u	100 ∅§	3 5k*	110J	10 ∅	S228
97#	70TB2	200	355	67B		30	3 0	40m		2 2	850					4 1	125	2 0	M308a
98	C380B	200	380	65C	500m	150m	3 0 §	10m	25C	2.8	1.5k	8 0u	100	100u	200	3 5k	120	2 0	M514
99	NLF380B	200	380	67	500m	150m	2 5	10m	25	2 8	1.5k	8 0u	100	100u	200	3 5k	125	2.0	
100	NLF385B	200	380	67	500m	150m	2 5	10m	25	2 8	1.5k	8 0u	100	20u	200	3 5k	125	2 0	
101	2N3532	200	400	20A	200m§	400m	4 0	15m	125J	1 9	250					5 0k	125J	16	M247
102#	71TB2	200	400	65B		30	3.0	40m		2.0	850					4 6k	125	2.0	M308a
103#	FT500AY4	200	400	75C		350m	4 0	3 0m	125J	2 2	1 2k§		400	15u⊘	200 △	7 0k△	125J	16 ∅	M406
104#	2SF802	200	400	80C		125m	3 0	25m	125J	1 4	1.0k		300	60u	20	7 0k	125J	2 †	S280
105#	2SF802A	200	400	80C		125m	3 0	25m	125J	1.4	1 0k		300	30u	20	7 0k	125J	.2 †	S280
106#	251RC20	200	400 △	85B	40m	15	2 5	9 0m		1.5	250	6 0u	50	100u	4 0	4 8k	125A	10 ∅	S158d
107#	73TB2	200	430	64B		30	3.0	40m		2 0	1 0k					5 1k	125	2 0	M308a
108#	CR7K303A45	200	435	65C	55m∅	150m	3 5	50m	125J	1 8	1 0k	3.5u	600	180u	100	6 0k	125J	5.0 ∅	M308b
109▼#	YST302QP2K3	200	450	70B	100m	220m	3 5	30m	125J	1 9	1 0k	4.0u⊘	600	60u⊘	200 §	7 4k	125J	3 0 †	S371a
110#	CR7K303A4	200	460	65C	55m∅	150m	3 5	50m	125J	1 7	1 0k	3.5u	600	180u	100	6 4k	125J	5 0 ∅	M308b

SYMBOLS AND CODES EXPLAINED IN INTERPRETER

6. SILICON CONTROLLED RECTIFIERS

IN ORDER OF (1) PEAK REV. VOLT., (2) MAX. CONT. CUR., (3) TEMPERATURE, (4) TYPE No.

LINE No	4 TYPE No	1 PRV and VBO (V)	MAX. CONT. CURRENT 2 Idc (A)	3 at TEMP (°C)	MAX. HOLD. CUR Ih @ 25°C (A)	MAX. GATE FIRING SPEC at 25°C Igf (A)	Vgf (V)	MAX SAT I Ir@PRV and Is@VBO (A)	at TEMP (°C)	MAX. FWD. VOLT. DROP at 25°C Vf (V)	@ If (A)	SWITCHING TIME at 25°C Ton (s)	for If (A)	Toff (s)	MIN. dV/dt @ 25°C (V/us)	ABS. MAX. RATINGS 1Cy PK SURGE I@25°C (A)	MAX TEMP (°C)	MAX GATE POWER (W)	DWG. No.
1	276D	200	470			.15	3 0	15m	125J	1.2	100				300	5.5k	125		M247
2	C291B△	200	470 △			150m	3 5										125A		S247a
3#	74TB2	200	470	63B		300m	3 0	40m		1 8	1.0k					5.6k	125	2 0	M308a
4	6RW71DY	200	470	65C		250m	3.1	10m∅	125J	65 ∅	300				4.0	5.5k§	125	16	S132
5♦	C290B	200	470	65C	100m	150m	3 5			1 2	500	10u	5 0	250u§	100 §	5 5k	125J	3.0	S132
6#	SH300D11	200	470	65C	300m	260m	3.5	20m	125J	1 6	100	6.0u	300	30u§	50	5.0k	125J	3 0 †	S267a
7	C291B⊠	200	470	66C	100m	150m	3 0	15m	125J	1 2 †	500	5 0u	5.0	100u§	100 §	5 5k	125J	3 0 †	M331a
8	NLC295B	200	470	67	100m	150m	3 0	15m	125	1 2	500	5 0u	5.0	20u	100	5 5k	125	3 0	
9	NLC297B	200	470	67	100m	150m	3 0	15m	125	1 2	500	5.0u	5.0	20u	100	5.5k	125	3.0	
10	NLF290B	200	470	67	100m	150m	3 0	15m	125	1 2	500	5.0u	5.0	100u	100	5 5k	125	3.0	
11	NLF295B	200	470	67	100m	150m	3.0	15m	125	1 2	500	5.0u	5 0	20u	100	5 5k	125	3.0	
12	NLF297B	200	470	67	100m	150m	3.0	15m	125	1.2	500	5 0u	5 0	20u	100	5 5k	125	3.0	
13	272D	200	470	71		.15	3 0	15m	125J	1 2	100				300	5 5k	125		M414
14#	301RC20	200	470 △	85B	40m	15	2 5	9 0m		1.4	300	6.0u	50	100u	4.0	5 5k	125A	10 ∅	S158d
15	NLF291B	200	470 △	125J	100m	150m	2.5	15m	125J	1 2	500	5 0u	100	100u§	100 §	5.5k△	125J	2.0 †	M436
16#	CR7K303A35	200	480	65C	140m	150m	3.5	50m	125J	1 6	1.0k	3.5u	600	180u	100	6 9k	125J	5.0 ∅	M308b
17▼#	YST301QP2K3	200	500	70B	100m	220m	3 5	30m	125J	1 9	1 0k	4 0u⊠	600	20u⊠	200 §	7.4k	125J	3.0 †	S371a
18#	80TB2	200	510	59B		30	3 0	40m		1.5	1.2k					6 4k	125	2.0	M308a
19▼	NLC501B	200	550	25	250m	150m	6 5 §			1 5	1 0k			200u§	100 §	7.0k	125J	5.0 †	M593
20#	81TB2	200	550	56B		30	3 0	40m		1 7	1.2k					7.0k	125	2.0	M308a
21	270D	200	550	67		15	3 0	15m	125J	1 2	500				300	6.5k	125		S295
22#	84TB2	200	595	58B		30	3 0	40m		1.6	1.6k					8 6k	125	2 0	M428
23#	91TB2	200	620	58B		30	3 0	40m		1.4	1.6k					8.6k	125	2.0	M428
24	C507B	200	625 △	125J	100m	150m	4.0	50m	125C	1.4	500	5.0u	25	100u⊠	100	6.5k	125J	26	M464
25	C508B	200	625 △	125J	100m	150m	4 0	50m	125C	1.3	500	5 0u	25	60u⊠	100	9.0k	125J	26	M464
26#	94TB2	200	700	55B		30	3.0	40m		1.2	1.6k					8.6k	125	2.0	M428
27▼#	FT800C4	200	800	63C		200m	3.0	30m	125J	1.6 §	2.5k				200 △	14k△	125J	16 ∅	M566
28	C530B	200	980 △	125J	250m	150m	4 0	25m	125J	1.2	1.1k	4.0u	25	150u⊠	100	10k	125J	26	M464
29	C520B	200	1.1k△	150J	250m	150m	4 0	25m	125C	1.2	1.1k	4 0u	25	150u⊠	100	10k	150J	26	M464
30#	CRS1/20AF	220	1 25	65C	20m	10m	3 0	1.0m△	125J	1.2	1 5	2.0u	1.0	15u	15	20	125J	1.0	TO5
31#	CRS3/20AF	220	4.5	90B	25m	20m	3 0	1 0m△	125J	1.3	4.5	2.0u	3 0	17u	15	55	125J	2.0	S62
32#	BTX18-200	240	1 6	100C	5.0m	5.0m	2 0	40m	125J	1.5	1.0		.30	60u	25	10 *	125	.05 †	TO5
33	C37B⊠	240	25	37C	20m∅	80m	3 0	5 0m	105J	2.3 †	30	1.4u	5.0			175	105J	.50 †	TO48
34	C40B⊠	240	35	62C	10m∅	40m	2 5	5.0m∅	125J	2.0 †	50	1.4u	5 0	8.0u	200 §	150	125J	.50 †	TO48
35	C45B⊠	240	55	89C	100m	70m	3.0	8.0m	125J	3.0 †	500	5 0u	50	30u§	200 §	1.2	125J	.50 †	TO83
36	C46B⊠	240	55	89C	100m	70m	3 0	8.0m	125J	3.0 †	500	5.0u	50	30u§	200 §	1.2	125J	.50 †	TO49
37	NL555B	240	55	89C	300m	150m	2 5	10m	125J	3.5 †	500	8.0u	50	100u§	200 §	1 2k	125J	2 †	TO49
38	NL556B	240	55	89C	300m	150m	2 5	10m	125J	3.5 †	500	8.0u	50	100u§	200 §	1.2k	125J	2 †	TO83
39	NLF45B	240	55	89C	100m	70m	3.0	8.0m	125J	3.0 †	500	5.0u	50	30u§	200 §	1.2k	125J	500m†	TO83
40	NLF46B	240	55	89C	100m	70m	3.0	8.0m	125J	3.0 †	500	5.0u	50	30u§	200 §	1.2k	125J	500m†	TO94
41	2N1795	240	70 △	65C		130m$	3 0 $	6 0m∅	65C	1.8 †	70					1 0k*	125C	.50 †	TO83
42	C55B⊠	240	110	60C	100m	70m	2 5	8 0m	125J	2.5 †	500	5.0u	5.0	15u§	200 §	1.2k	125J	.50 †	TO49
43	C56B⊠	240	110	60C	100m	70m	2.5	8.0m	125J	2.5 †	500	5.0u	5.0	15u§	200 §	1.2k	125J	.50 †	TO83
44	C154B⊠	240	110	83C	500m	200m	2 5	8.0m	125J	3.0 †	500	5 0u	50	7.0u§	200 §	1.4k	125J	2 0 †	TO94
45	C155B⊠	240	110	83C	500m	200m	2.5	8.0m	125J	3.0 †	500	5.0u	50	12u§	200 §	1 4k	125J	2.0 †	TO94
46	C156B⊠	240	110	83C	500m	200m	2.5	8.0m	125J	3.0 †	500	5.0u	50	7.0u§	200 §	1.4k	125J	2.0 †	TO83
47	C157B⊠	240	110	83C	500m	200m	2.5	8 0m	125J	3.0 †	500	5.0u	50	12u§	200 §	1.4k	125J	2.0 †	TO94
48	NLF150B	240	110	89C	500m	150m	2 5	10m	125J	2.6 †	500	8 0u	50	100u§	200 §	1 6k	125J	2 0 †	TO94
49	NLF152B	240	110	89C	500m	150m	2.5	10m	125J	2.6 †	500	8 0u	50	100u§	200 §	1.6k	125J	2 0 †	TO83
50	C178B	240	200	64C	500m	300m	2 5	12m	125J	3 5 †	1.5k	8 0u	100	150u§	200 §	2.5k	125J	2.0 †	TO93
51	C181B	240	235	65C	500m	300m	2.5	12m	125J	3.5 †	1.5k	8.0u	100	30u§	200 §	2.5k	125J	2.0 †	TO93
52	C180B⊠	240	235	80C	500m	150m	2 5	6.0m	125J	2.9 †	1.5k	8.0u	100	30u§	200 §	3.5k	125J	2 0 †	TO93
53	C185B⊠	240	235	80C	500m	300m	2.5	12m	125J	2.9 †	1.5k	8 0u	100	15u§	200 §	3 5k	125J	2.0 †	TO93
54	RTH0125	250	.20	80C	5 0m	20m	1.0	.10m	100	1.5	.20	20u	.20		100	5.0	100C		M443
55	RTH0225	250	.20	80C	10m	1 0m	1.0	1 0m	125	2.5	20	20u	20		100	5.0	125C		M443
56	RTH0325	250	20	80C	10m	20m	1 0	50m	125	1 5	.20	.20u	20		100	5 0	125C		M443
57	RTH0425	250	20	80C	5 0m	10m	80	10m	125	1.5	.20	.20u	20		100	5 0	125C		M443
58	RTH0525	250	.20	80C	3.0m	.02m	.80	.02m	125	1 3	20	.20u	.20		100	5.0	125C		M443
59	RTB0125	250	25	80A	5 0m	200u	1 0	100u	100	1 5	.25	200n	.25		100	6 0	100A		TO52
60	RTB0225	250	.25	80A	10m	1 0m	1 0	1.0m	125	2.5	25	200n	.25		100	6 0	125A		TO52
61	RTB0325	250	25	80A	10m	.20m	1 0	.50m	125	1 5	.25	.20u	25		100	6.0	125A		TO52
62	RTB0425	250	25	80A	5 0m	10m	.80	10m	125	1 5	.25	.20u	25		100	6.0	125A		TO52
63	RTB0525	250	25	80A	3.0m	02m	.80	.02m	125	1 3	.25	.20u	25		100	6.0	125A		TO52
64	RTC0125	250	25	80A	5 0m	20m	1 0	10m	100	1 5	20	20u	.25		100	6.0	100A		TO18
65	RTC0225	250	.25	80A	10m	1 0m	1 0	1 0m	125	2 5	25	.20u	25		100	6 0	125A		TO18
66	RTC0325	250	25	80A	10m	20m	1 0	50m	125	1 5	.25	.20u	.25		100	6 0	125A		TO18
67	RTC0425	250	25	80A	5.0m	.10m	.80	.10m	125	1.5	.25	.20u	.25		100	6.0	125A		TO18
68	RTC0525	250	25	80A	3 0m	02m	80	02m	125	1.3	.25	.20u	.25		100	6.0	125A		TO18
69	2N4337	250	.39	25	1.0m	01m	80			1 5	80			10u		8.0	125A	.02	TO52
70	RTJ0225	250	510m	55C	10m	1.0m	1.0	1 0m	125	2 5	250m†				100	6.0	150S	10m†	TO92
71	RTJ0525	250	510m	55C	3 0m	20u	800m	20u	125	1.3	250m†				100	6.0	150S	10m†	TO92
72#	CS11J	250	75	40C	12m	7.0m	25	.90m†		2.2 †	2.4					20	100C	.05	TO5
73	2N1934	250	75	55A$	80m$	30m$	2.0 $	.50m∅	125A	1 4 $	75					30 §	125A	10	M77
74	RTD0125	250	1 0	80C	5 0m	.20m	1 0	10m	100	1.5	1 0	.20u	1 0		100	15	100C		TO5
75	RTD0225	250	1 0	80C	10m	1.0m	1 0	1.0m	125	2.5	1.0	20u	1.0		100	15	125C		TO5
76	RTD0325	250	1 0	80C	10m	.20m	1 0	.50m	125	1.5	1.0	20u	1 0		100	15	125C		TO5
77	RTD0425	250	1 0	80C	5 0m	.10m	80	10m	125	1.4	1.0	20u	1.0		100	15	125C		TO5
78	RTD0525	250	1.0	80C	3.0m	.02m	.80	.02m	125	1.4	1 0	.20u	1.0		100	15	125C		TO5
79	RTF0125	250	1 0	80C	5 0m	20m	1 0	10m	100	1.5	1.0	20u	1 0		100	15	100C		TO5
80	RTF0225	250	1 0	80C	10m	1.0m	1 0	1 0m	125	2.5	1 0	20u	1.0		100	15	100C		TO5
81	RTF0325	250	1.0	80C	10m	.20m	1.0	50m	125	1.5	1 0	.20u	1.0		100	15	125C		TO5
82	RTF0425	250	1 0	80C	5 0m	10m	80	.10m	125	1.4	1 0	20u	1 0		100	15	125C		TO5
83	RTF0525	250	1 0	80C	3 0m	.02m	80	02m	125	1.3	1.0	20u	1 0		100	15	125C		TO5
84	2N4217	250	1 0	85	7 0m	300u	1.0	200u	125	2.0 †	3 1					15 §*	125A	.10 ∅	TO5
85	C9H	250	1 1	18A	20m	8 0m	2 0	1.0m∅	125J	1.1 ∅	1.1			12u		30 §	125J	5.0	M77
86#	BRY42	250 #	1 50	25A	25m	25m	3 0	1.0m	25	1.3	4 5					55	125	75m	
87#	15T4	250	1 6 △	25C	1 5m∅	10m	3.0	.25m△	25J	2.0	1 0			20u		15	100J		TO5
88#	SF1E11A	250	1 6	62C	10m	1.0m	800m	100u	100J	3.4	10					17	150	100m	TO5
89	2N2327	250	1.6	85C	3.0m$	.35m$	1 0 $	.10m△	125C	1.5 §	1 6					15 §	125C	.01	TO5
90	2N2327A	250	1 6	85C	3 0m$	75u$	900m$	100u	125C	1.5 §	1 6					15 §	125C	10m	TO5
91	C6216	250	1.6	85C	2.0m	200u	80	100u	125	1 5	1 6						150		M185b
92#	SF1E11	250	1 6	89C	10m	1 0m	800m	100m	125C	3.4	10					17	125	100m	
93	C511H	250 ∅	1 6	104C	2 0m	.20m	80	.01m	25J	2.2 △	4 0					15 §	125J	.10	M181a
94	SCRFL25	250 ⊠	1.7	80C	50m	15m	2 0	1 0m	125C	1 2 △	1.0	2.0u§	1 0	12u§		60 §	125C	5.0	A130
95	NCR250B	250	3 0	80B$		25m	2 5	1 0m	125C	2 0 §	1.0					25 §	100A		S17
96	3RC25	250	3 0	92C	5 0m∅	15m	2.0	2.5m	105J	2 0	3 0	2.5u	30		20	30	105J	5 †	TO64
97	SCR325	250 ⊠	4.0	80C	25m	10m	2 0	1.0m△	125C	2.0 △	3.0	1 3u§	1 0	15u§		60 §	150J	5 0	S62
98	3TCRF	250 ⊠	4 2	60B	50m	50m	3.0	2 5m∅	125J	1 4 ∅	3.0 §	2 0u	3 0	30u		40 *	150S	5 ∅	S56
99	2N1775	250	4.7 △	60C		30m$	2.0 $	5 0m∅	125C	1.9 †	4 7					60 *	125C	.50	TO64
100#	BTY80	250	4 7	60B	15m§	25m§	2.0	8.0m∅	125J	2.3	20	5 0u§	10	15u§		60	125J	5.0	DO4
101	2N1775A	250	4 7 △	105C	80m$⊠	30m$	2.0 $	5.0m∅	125C	1 9 †	4.7					60 *	150C	.50	TO64
102#	2SF265	250	5 0	73C	10m∅	30m	2.5	3.0m∅	100J	1.3	5.0					90	100J	5 ∅	S141b
103#	BTY79-250R	250	6.0	70A	15m§	25m	2 0	8.0m∅	125J	2.3	20	5 0u§	10	15u§		40	125J	5.0	S172
104	NCF250C	250	6.0	70B$		30m$	2.0 $	4.5m∅	60C	1.9 $	4.7			12u⊠		60	100A	50	S17
105	5TCRF	250 ⊠	7.0	60B	50m	50m	3.0	2 5m∅	125J	83 ∅	5.0 §	2 0u	5 0	30u		60 *	150S	5 ∅	S56
106	SCRF525	250 ⊠	7.0	60C	50m	25m	2.0	1 0m	125C	1 9 △	15	2.0u§	10	12u§		100 §	125J	10	S121
107	C12H	250	7 0 △	70C	8.0m∅	15m	2 0	9 0m	125J	1 8	15	1 0u	10	12u§		60	125J	5.0	S17
108	5RC25	250 ⊠	7.4 △	60C	5 0m∅	15m	2.0	4 5m	105C	1.9	15 †	2 5u	60		20	60 △	105J	50 †	TO64
109	5RCF25A	250 ⊠	7 4 △	60C	5 0m∅	15m	1.4	4 5m	125C	1.9	15 †	2 5u	5 0	12u		60 △	125J	50 †	TO64
110#	SF5E11	250	8.0	24		20m	2 0	5 0m	125J	2 0	20					60	125J	500m	S141a

SYMBOLS AND CODES EXPLAINED IN INTERPRETER

6. SILICON CONTROLLED RECTIFIERS

IN ORDER OF (1) PEAK REV. VOLT., (2) MAX. CONT. CUR., (3) TEMPERATURE, (4) TYPE No.

LINE No	4 TYPE No.	1 PRV and VBO (V)	MAX. CONT. CURRENT 2 Idc (A)	3 at TEMP (°C)	MAX. HOLD CUR Ih @ 25°C (A)	MAX. GATE FIRING SPEC at 25°C Igf (A)	Vgf (V)	MAX SAT I Ir@PRV and Is@VBO (A)	at TEMP (°C)	MAX. FWD. VOLT. DROP at 25°C Vf (V)	@ If (A)	SWITCHING TIME at 25°C Ton (s)	for If (A)	Toff (s)	MIN. dV/dt @ 25°C (V/us)	ABS. MAX. RATINGS 1Cy PK SURGE I@25°C (A)	MAX TEMP (°C)	MAX GATE POWER (W)	DWG. No
1	NCF250D	250	10		15mØ	50m	3.5	5 0m	100	1 2	10	500n	10	6 0u	25 §	125	100A	50 †	TO48
2	2N1847	250	10 △	35C		150m$	3 5 $	5.5mØ	35C	2 5 †	10					125 *	100C	5 †	TO48
3#	2SF275	250	10	63C	10mØ	30m	2.5	3.0mØ	100J	1 2	10					90	100J	5 Ø	S141b
4#	2SF275A	250	10	63C	10mØ	30m	2 5	3.0mØ	100J	1 2	10		10	15m☑	100 △	90	100J	5 0 Ø	S141b
5	2N1847A	250	10 △	80C		150m$	3 7 $	5 5mØ	80C	2 5 †	10					125 *	125C	5 †	TO48
6	2N1847B	250	13 △	80C		75m	3 7 $	1 0mØ	125C	1 8 †	13					150 *	125C	5 †	TO48
7#	BTY87/250R	250	15	61A	10mØ§	65m	3 5	11m	125J	3.0	50	3.0u§	10	15u	100	106	125J	50	TO48
8#	SF10E11	250	16	26		80m	3 5	11m	100C	3.0	50					113	100J	500m	S18
9	2N686	250	16 △	65C		80m$	3 0 $	5 5mØ	125C	2 0 Ø	16					150 *	125C	50	TO48
10	JAN2N686	250	16 △	65C	50m	80m	3 0	2.0m	25	2 0 †	50	5 0u	10	30u		150	125A	5 †	TO48
11	2N2889	250	16 △	65C		80m$	3 0 $	5 5m	65C	2 0 †	16			12u	20	150 §*	125C	.5 †	TO48
12	10RC25	250 ☑	16 △	65C	10mØ	40m	3 0	5 5mØ	105C	2 3 †	31					125 △	105J	50 †	TO48
13#	BTY91/250R	250	16	75B	10mØ§	40m	3 0	11m	125J	2 0	50	3 0u§	10	20u§	100	136	125J	5.0	TO48
14	C36H	250	16 △	100	20mØ	50m	3 5	5 5m	100J	1 2		4 5u☑	10	20u		125	100B	50	S18
15	16C25	250	16	125J	50m	15m	2 0	10m	125J	2.0	50	7 0u	16	75u§		150	125J	5 0 Ø	TO48#△
16	16C25B	250	16	125J	50m	40m	2 0	10m	125J	2 0	50	7 0u	16	75u§	25	150	125J	5 0 Ø	TO48#△
17	16C25C	250	16	125J	50m	40m	2.0	10m	125J	2.0	50	7 0u	16	75u§		150	125J	5 0 Ø	TO48#△
18	2N686A	250	18 △	65C	50m$☑	40m	3 0 $	1 0mØ	65C	2 1 †	18				200	250 *	125C	5 †	TO48
19#	2SF295	250	20	58C	10mØ	50m	3.5	3 0mØ	100	1 3	20					300	100J	5 Ø	S106b
20#	2SF295A	250	20	58C	10mØ	50m	3.5	3 0mØ	100	1.3	20		20	15u☑	100 △	300	100	5 0 Ø	S106b
21	TCR252	250	22	25C	25mØ§	50m	3 0	3 0mØ	100C	820mØ	20 §	7 5u		12u		150	125C	500m	S148
22	10RCF25A	250 ☑	25 △	45C	10mØ	90m	2 5	6 0mØ	125C	2 8	50 †	3 0u	10	12u§	25 §	200 △	125J	500m†	TO48
23#	SF16E11	250	25	57		40m	3 0	11m	125C	1 9	50					135	125J	500m	S18
24	C40H△	250	35 △	18B	100m	40m	3 0	6 0m△	25J	2 0 △	50			12u		150	125J	5 0	TO48
25	SCRF1625	250 ☑	35	25C	100m	40m	3 0	4.0m△	125C	2 0	50	2 0u§	10	12u§		200 §	125J	15	TO48
26	16RC25A	250 ☑	35 △	35C	20mØ	40m	2 0	5 5mØ	125C	2 3	70 †		10	75u§	25 §	250 △	125J	50 †	TO48
27	16RCF25A	250 ☑	35 △	35C	20mØ	40m	2 0	2.0mØ	125C	2.3	70 †		10	12u§	25 §	250 △	125	50 †	TO48
28	18RC25	250 ☑	35 △	45C	20mØ	40m	2 0	5.5mØ	125C	2 0	70 †					350 △	125J	50 †	TO48
29	C38H△	250 ☑	35	56C	80m	40m	3 0	6 0m	25J	2.0 △	50	1.4u	5 0	24u	20	150	150C	12	TO48
30	22RC25	250 ☑	35 △	70C	20mØ	40m	2 0	6 0mØ	150C	2 3	70 †				20	225 △	150J	500m†	TO48
31	C38H☑	250	35	87C	80m	40m	2 5	5 0m	150J	2 0 †	50	1 4u	5 0	24u§	20	200	150J	50 †	TO48
32	NLC38H	250	35	90C	80m	40m	2 5	5 0m	150J	2 0	50	1.4u	5 0	24u	20	200	150J	50 †	TO48
33	35C25	250	35	125J	200m§	200m	3 0	10m	125J	2 5	220	10u	35	40u§		900	125J	15 Ø	TO94#△
34	35C25B	250	35	125J	200m§	200m	3 0	10m	125J	2 5	220	10u	35	40u§	100	900	125J	15 Ø	TO94#△
35	35C25BF	250	35	125J	200m§	200m	3.0	10m	125J	2 5	220	10u	35	40u§	100	900	125J	15 Ø	TO83#△
36	35C25F	250	35	125J	200m§	200m	3 0	10m	125J	2 5	220	10u	35	40u§		900	125J	15 Ø	TO83#△
37#	CR30-304AA	250	38	70C	20mØ	80m	3 0	10m†	125C	2 5	100	20u	100	20u☑	20	660	125	5 0 Ø	TO49
38#	CR30-304BA	250	38	70C	20mØ	80m	3 0	10m†	125C	2 5	100	20u	100	15u☑	20	660	125	5 0 Ø	TO49
39#	CR30-304CA	250	38	70C	20mØ	80m	3 0	10m†	125C	2 5	100	20u	100	12u☑	20	660	125	5 0 Ø	TO49
40#	BTY95/250R	250	50	75B	10mØ§	80m	3 0	11m	125J	3 3	500	3 0u	50	20u	10	680	125J	5 0	TO49
41	C45H△	250	55 △	85C	100m	75m	3 0	10m	120C	3 1 △	500	5 0u	50	30u§	30 §	700	125J	500m	S315
42	C46H△	250	55 △	85C	100m	75m	3 0	10m	120C	3 1 △	500	5.0u	50	30u§	30 §	700	125J	500m	TO94
43	555H	250	55	99C		150m	3 0								200		125J		TO49
44	556H	250	55	99C		150m	3 0								200		125J		TO83
45#	5TC25	250	55	125	20m	45m	3 0			1.3	50	5 0u	50	25u		500	100J	20	S185
46	40RCS25	250 ☑	63 △	87C	200m	110m	3 0	2 5mØ	105J	1 8 †	125					800 △	105J	5 †	S278a
47#	40T3	250	65	75B	200m	200m	25	10m†		2 1 †	200					1.1k	125B	1 0	M308
48#	CR50-304AA	250	66	75C	32mØ	60m	3 0	10m†	125C	1.7	150	5 5u	150	20u☑	20	760	125	5 0 Ø	TO49
49#	CR50-304BA	250	66	75C	32mØ	60m	3 0	10m†	125C	1 7	150	5 5u	150	15u☑	20	760	125	5 0 Ø	TO49
50#	CR50-304CA	250	66	75C	32mØ	60m	3 0	10m†	125C	1 7	150	5 5	150	12u☑	20	760	125	5 0 Ø	TO49
51#	CR50-304DA	250	66	75C	32mØ	60m	3 0	10m†	125C	1 7	150	5 5	150	8 0u☑	20	760	125	5 0 Ø	TO49
52#	CR50-304LA	250	66	75C	32mØ	60m	3 0	10m†	125C	1 7	150	5 5u	150	25u☑	20	760	125	5 0 Ø	TO49
53	2N1914	250	70 △	62C		130m$	3 0 $	5 5mØ	62C	1 9 †	70					1 0k*	125C	50	TO49
54	2N2028	250	70 △	85C		150m$	3 0 $	5 5mØ	85C	1.9 †	70					1 0k*	150C	50	TO49
55#	BTY99/250R	250	70	85B	10mØ§	70m	3 0	11m	125J	2 5	500	3 0u	50	20u	10	900	125J	5 0	TO49
56	70C25	250	70	125J	200m§	200m	3.0	10m	125J	1 8	220	10u	70	40u§		1 6k	125J	15 Ø	TO94#△
57	70C25B	250	70	125J	200m§	150m	3.0	10m	125J	1 8	220	10u	70	40u§	100	1 6k	125J	15 Ø	TO94#△
58	70C25BF	250	70	125J	200m§	150m	3 0	10m	125J	1 8	220	10u	70	40u§	100	1 6k	125J	15 Ø	TO94#△
59	70C25F	250	70	125J	200m§	200m	3 0	10m	125J	1 8	220	10u	70	40u§		1 6k	125J	15 Ø	TO83#△
60#	CR31-303A	250	80	55C	38mØ	60m	3 0	10m†	125C	1 7	100	3 7u	100	130u	20	700	135J	5 0 Ø	TO49
61#	CR31-304AA	250	80	55C	38mØ	60m	3 0	10m†	125C	1 7	100	5.7u	100	20u☑	20	700	135J	5 0 Ø	TO49
62#	CR31-304BA	250	80	55C	38mØ	60m	3 0	10m†	125C	1 7	100	5 7u	100	15u☑	20	700	135J	5 0 Ø	TO49
63#	CR31-304CA	250	80	55C	38mØ	60m	3 0	10m†	125C	1.7	100	5 7	100	12u☑	20	700	135J	5 0 Ø	TO49
64#	CR31-304DA	250	80	55C	38mØ	60m	3 0	10m†	125C	1 7	100	5 7u	100	8 0u☑	20	700	135J	5 0 Ø	TO49
65	TCR2550	250	80	70C	25mØ	50m	3 0	4 0mØ	100C	75 Ø	50 §	4 5u		18u		1 0k	125C	1.0	S147
66	36RC25A	250 ☑	80 △	75C	20 Ø	700m	2 5	5 5mØ	125C	2.2 †	160					850 △	125J	2.0 †	TO94
67	36RCF25A	250 ☑	80 △	75C	20 Ø	700m	2 5	5 5mØ	125C	2 2 †	160		50	20 §		850 △	125J	2.0 †	TO94
68	37RC25A	250 ☑	80 △	75C	20 Ø	700m	2 5	5 5mØ	125C	2 2 †	160					850 △	125J	2 0 †	TO83
69	37RCF25A	250 ☑	80 △	75C	20 Ø	700m	2 5	5 5mØ	125C	2 2 †	160			20 §		850 △	125J	2 0 †	TO83
70	51RCG25	250 ☑	80 △	75C	100m	150m	2 5	15mØ	125C	2 5 †	160		50	20u	100 §	1 2k△	125J	3 0 †	TO94
71	52RCG25	250 ☑	80 △	75C	100m	150m	2 5	15mØ	125C	2 5 †	160			20u	100 §	1 2k△	125J	3 0 †	TO83
72#	CR70-301A	250 †	85	75C		100m	3 0	15m	25C	1 7 †	70				20	1 0k	125C	1 0	TO49
73#	CR70-301C	250	85	75C		100m	3 0	30m†	125C	1 7	210				20	1 0k	125	5 0	M376
74	100C25	250	100	125J	200m	200m	2 5	25m	125J	2 0	500	10u	100	40u§		2 0k	125J	10mØ	TO93#△
75	100C25B	250	100	125J	200m	200m	2.5	25m	125J	2 0	500	10u	100	40u§	100	2 0k	125J	10 Ø	TO93#△
76#	CR51-303A	250	105	55C	38mØ	60m	3.0	10m†	125C	1 6	150	3 4u	120	185u	20	760	135J	5 0	TO49
77	C55H△	250	110 △	60C	100m	75m	3.0	10m	125J	2.5	500	5 0u	50	30u§	20 §	1 0k	125J	5 0	S91
78	C56H△	250	110 △	60C	100m	75m	3 0	10m	125J	2.5	500	5 0u	50	30u§	20 §	1 0k	125J	5 0	S108
79	71RC25A	250 ☑	110 △	62C	20mØ	70m	2 5	5 5mØ	125J	1 9 †	220		50	30u§		1 0k△	125J	5 †	TO94
80	71RCF25A	250 ☑	110 △	62C	20mØ	70m	2 5	5 5mØ	125J	1 9 †	220		50	20u§	25 △	1.0k△	125J	50 †	TO94
81	72RC25A	250 ☑	110 △	62C	20mØ	70m	2 5	5 5mØ	125J	1 9 †	220		50	30u§		1 0k△	125J	5 †	TO83
82	72RCF25A	250 ☑	110 △	62C	20mØ	70m	2 5	5 5mØ	125J	1 9 †	220		50	20u§	25 △	1 0k△	125J	50 †	TO83
83	71RCG25	250 ☑	110 △	75C	100m	150m	2 5	15mØ	125C	2.4 †	220		50	15u	100 §	1 4k	125J	3 0 †	TO94
84	72RCG25	250 ☑	110 △	75C	100m	150m	2 5	15mØ	125C	2 4 †	220			15u	100 §	1 4k△	125J	3 0 †	TO83
85	71RC25B	250 ☑	110 △	85C	20mØ	70m	2 5	5 5mØ	150J	2 2 †	220		50	40u§		1 0k△	150J	5 †	TO94
86	72RC25B	250 ☑	110 △	85C	20mØ	70m	2 5	5 5mØ	150J	2 2 †	220		50	40u§		1 0k△	150J	5 †	TO83
87	C62H△	250	110 △	87C	100m	75m	3 0	15m	145C	2 5 △	1 5k	5 0u	50	50u		1.0k	150J	500m	S315
88	C60H	250	110	100C	100m	70m	2 5	8 0m	125J	2 5 †	500	5 0u	50	50u§		1 6k	150J	.5 †	TO49
89	C62H☑	250	110	100C	100m	70m	2 5	8.0m	125J	2.5 †	500	5 0u	50	50u§		1 6k	150J	.50 †	TO83
90	NLC62H	250	110	103C	10	70m	2 5	8 0m	150J	2 5	500	5 0u	50	50u		1.6k	150J	.50 †	TO83
91#	10TC25	250	110	125J	20m	60m	3.0			1 5	110	5 0u	110	25u		1 1k	125J	20	S185
92#	CR100-301C	250 △	124	80C		100m	3.0	15m	25C	1.7	100				20	1 2k	125C	1.0	M376
93#	CR100-301D	250	125	80C	30mØ	100m	3.0	30m†	125C	1.7	300			100	20	1 5k	125	5.0	TO49
94	150C25	250	150	125J	200m	200m	2.5	25m	125J	1 7	500	10u	150	40u§		3 0k	125J	10 Ø	TO93#△
95	150C25B	250	150	125J	200m	200m	2 5	25m	125J	1 7	500	10u	150	40u§	100	3 0k	125J	10 Ø	TO93#△
96	101RC25	250 ☑	160 △	80C	50mØ	150m	2 5	10mØ	125J	1.7 †	314		150	25u§		2 0k△	125J	2 †	TO93
97#	CR153-303A	250	220	70C	35mØ	150m	3 5	30m†	125C	1 6	450				100	3 0k	125	5 0	M201
98#	20TC25	250	220	125	50m	100m	3 0			1 5	200	5 0u	200	30u		2 5k	125J	20	S183
99#	CR152-303A	250	230	70C	35mØ	150m	3 5	30m†	125C	1 5	450				100	3.1k	125	5 0	M201
100	151RC25	250 ☑	235 △	62C	50mØ	100m	2 5	10mØ	125J	1 7 †	471		150	25u§		3 0k△	125J	2 †	TO93
101	151RC25A	250 ☑	235 △	80C	50mØ	100m	2 5	10mØ	125J	1.4 †	471		150	40u§		3 5k△	125J	2 †	TO93
102	151RCF25A	250	235 △	80C	50mØ	100m	2 5	10mØ	125J	1.4 †	471	7 0u	50	30u§	10 △	3 5k△	125J	2.0 †	TO93
103▼	151RF25	250 ☑	235	80C	200m	200m	2 5	15m	125C	1 9 †	471		250	20u§	200 §	4 2k△	125J	3 0 †	TO93
104#	CR151-303A	250	240	70C	35mØ	150m	3 5	30m†	125C	1 4	450				100	3 3k	125	5 0	M201
105#	CR253-303A	250	320	40C	35mØ	150m	3 5	30m†	125C	1 6	450				100	3 5k	125	5.0 Ø	M201
106#	CR252-303A	250	336	50C	35mØ	150m	3 5	30m†	125C	1 5	450				100	3 6k	125	5 0 Ø	M201
107	C290H	250	470 △			150m	3 5										125A		S132
108	C291H△	250	470 △			150m	3 5										125A		S247a
109	6RW71EY	250	470	65C		250m	3 1	10mØ	125J	65 Ø	300				4 0	5 5k§	125	16	S132
110	C291H☑	250	470	66C	100m	150m	2.5	15m	125J	1 2 †	500	5 0u	5 0	100u§	100	5 5k	125J	3 0 †	

SYMBOLS AND CODES EXPLAINED IN INTERPRETER

6. SILICON CONTROLLED RECTIFIERS

IN ORDER OF (1) PEAK REV. VOLT., (2) MAX. CONT. CUR., (3) TEMPERATURE, (4) TYPE No.

LINE No	4 TYPE No	1 PRV and VBO (V)	MAX. CONT CURRENT 2 Idc (A)	3 at TEMP (°C)	MAX. HOLD. CUR Ih @ 25°C (A)	MAX GATE FIRING SPEC at 25°C Igf (A)	Vgf (V)	MAX SAT I Ir@PRV and Is@VBO (A)	at TEMP (°C)	MAX. FWD VOLT. DROP at 25°C Vf (V)	@ If (A)	SWITCHING TIME at 25°C Ton (s)	for If (A)	Toff (s)	MIN. dV/dt @ 25°C (V/us)	ABS MAX. RATINGS 1Cy PK SURGE I@25°C (A)	MAX TEMP (°C)	MAX GATE POWER (W)	DWG. No.
1	JAN2N2328	300			2 0m	35m	1 0	01m	25	2.2	4.0					15	125	01	TO5
2	JAN2N2328A	300			2 0m	35m	1 0	01m	25	2.2	4 0					15	125	01	TO5
3	C354C	300			500m	500m	4 0	14m	25C	3.0 †	500 †		50	7.0u§	200 §	1.2k	125J	2.0	M514
4	C355C	300			500m	500m	4 0	14m	25C	3.0 †	500 †		50	12u§	100 §	1 2k	125J	2 0	M514
5	C385C	300			500m	300m	3 0	10m	25C	2.8 †	1.5k†		250	15u§	200 §	3 5k	125J	2 0 †	M514
6	C506C	300			500m	220m	5 0	10m	25C				300	40u§	200 §	8 0k	125J	5.0 †	M464
7	C510C	300			500m	200m	5 0	10m	25C	2 2 †	500 §		300	12u§	200	4.0k	125J	2.0 †	M464
8#	10RCV30	300		125	50m	45m	2.9	6 0m	125	2.3			135	10u	100	135	125	.50	TO48
9	2N5791	300	.120m	75A	10m$	350u	1 2 $	200u	125A	1.2	240m					4 0	125A	10m†	TO106
10	RTH0130	300	20	80C	5 0m	20m	1 0	10m	100	1.5	.20	20u	20		100	5.0	100C		M443
11	RTH0230	300	20	80C	10m	1 0m	1.0	1 0m	125	2 5	.20	20u	.20		100	5.0	125C		M443
12	RTH0330	300	20	80C	10m	.20m	1.0	.50m	125	1 5	.20	20u	.20		100	5.0	125C		M443
13	RTH0430	300	20	80C	5 0m	10m	80	10m	125	1 5	.20	20u	.20		100	5.0	125C		M443
14	RTH0530	300	20	80C	3 0m	02m	80	02m	125	1.3	20	.20u	20		100	5.0	125C		M443
15	2N5722	300	200m	90A	2 0m	20u	600m	100u	150A	1.4	400m			50u	100	5.0	150A	25m†	TO18
16	AA103	300	25	75	2 0m	2 0u	60	2 0u	25	1 5	1 0	1 0u	1.0	20u	50	15	150		TO18
17	AA110	300	25	75A	2 0m	02m	.60	2.0u	25A	1 5	1 0 †				50	15 §*	150A		TO18
18	AA117⊘	300	.25	75A	3 0m	200u	80	2 0u	25A	1.5	1.0 †				50	15 §*	150A		TO18
19	RTB0130	300	25	80A	5.0m	200u	1.0	100u	100	1 5	25	200n	25		100	6.0	100A		TO52
20	RTB0230	300	25	80A	10m	1 0	1 0	1.0m	125	2.5	.25	200n	25		100	6.0	125A		TO52
21	RTB0330	300	25	80A	10m	20m	1 0	50m	125	1 5	25	.20u	25		100	6.0	125A		TO52
22	RTB0430	300	.25	80A	5 0m	10m	80	10m	125	1 5	25	.20u	25		100	6.0	125A		TO52
23	RTB0530	300	25	80A	3 0m	02m	80	02m	125	1.3	.25	.20u	25		100	6.0	125A		TO52
24	RTC0130	300	25	80A	5 0m	20m	1.0	.10m	100	1.5	20	.20u	.25		100	6 0	100A		TO18
25	RTC0230	300	25	80A	10m	1 0m	1.0	1.0m	125	2.5	.25	.20u	25		100	6 0	125A		TO18
26	RTC0330	300	25	80A	10m	20m	1 0	50m	125	1 5	25	20u	.25		100	6.0	125A		TO18
27	RTC0430	300	25	80A	5.0m	10m	.80	10m	125	1 5	25	20u	25		100	6.0	125A		TO18
28	RTC0530	300	25	80A	3.0m	02m	80	02m	125	1 3	.25	.20u	.25		100	6.0	125A		TO18
29▼#	2SF1113	300 ⊘	300m	25A		1 0m	800m	100u	100J	1.2	600m					10 △	100J	100m⊘	C123
30▼#	CR02AM6	300 ⊘	300m	25A		1 0m	800m	100u	100J	1.2	600m					10 △	100J	100m⊘	C123
31	2N882	300 †	.35	100C	5 0m	20m	80	.10m△	125C	1 5	.20					20 §*	150C		TO18
32	2N890	300 †	35	100C	1 0m	02m	60	02m	125C	1 5	20					20 §*	150C		TO18
33#	2SF106	300 ⊘	38	25A		50m	1 0	10m	100J	2 5	4.0					15	100J	.01	TO5
34	2N5727	300	390m	90A	2 0m	20u	600m	200u	150A	1 5	780m			50u	100	8.0	150A	25m†	TO5
35#	2SF524	300 ⊘	.40	25A	2.0m⊘	3 0m	1 0	.25m⊘	125J	1.2	1.0					20	125J	.1 ⊘	TO5
36♦#	CR05A6	300 ⊘	400m	25A		3.0m	1.0	250u	125J	1 2	1.0					20 △	125J	100m⊘	TO5
37♦	C107C2	300	400m	32A$	3.0m	500u	800m	100u	110	2 5	4 0	1 2u	1 0	40u	8 0 ⊘	15	110J	500m	M626
38♦	C107C4	300	400m	32A$	3 0m	500u	800m	100u	110	2 5	4 0	1 2u	1 0	40u	8.0 ⊘	15	110J	500m	M628
39	AD103	300	45	75A	2.0m	2u	60	2.0u	25A	1 5	1 0 †				50	15 §*	150A		TO5
40	AD110	300	45	75	2 0m	.02m	.60	2.0u	25	1 5	1.0	1 0u	1 0	20u	50	15	150		TO5
41	AD117	300	45	75	3 0m	20m	.80	2.0u	25	1.5	1 0	1.0u	1 0	20u	50	15	150		TO5
42	RTJ0230	300	510m	55C	10m	1.0m	1 0	1.0m	125	2.5	250m†				100	6 0	150S	10m†	TO92
43	RTJ0530	300	510m	55C	3 0m	20u	800m	20u	125	1.3	250m†				100	6.0	150S	10m†	TO92
44#	TD3001J	300	600m	25A	40m⊘	20m	3 0	1 0m	125J	2.0	1 0	1.5u§	500m	15u§	50 ⊘§	12		60m	C16e
45#	TDH3	300	600m	25A	5 0m	300u	3 0	1.0m	125J	2 0	1 0	1 5u§	500m	60u§	10 ⊘§	12		900u	C16e
46#	TDRA3	300	600m	25A	20m⊘	10m	3.0	1.0m	125J	2 0	1 0	1.5u§	500m	20u§	50 ⊘§	12		30m	C16e
47#	CS11K	300	.75	40C	12m	7 0m	.25	90m†		2.2 †	2 4					20	100C	.05	TO5
48	2N1935	300	75	55A$	80m$	30m$	2.0 $	.45m⊘	125A	1.4 $	.75					30 §	125A	.10	M77
49♦	C107C1	300	800m	20A$	3.0m	500u	800m	100u	110	2 5	4 0	1.2u	1.0	40u	8.0 ⊘	15	110J	500m	M627
50♦	C107C3	300	800m	20A$	3 0m	500u	800m	100u	110	2.5	4.0	1 2u	1.0	40u	8 0 ⊘	15	110J	500m	M625
51#	TO 8N3A00	300	.90	85C	20m	10m	3.0			1.2	1.0	2 0u	1.0	15u	15	19	125J	1 ⊘	TO5
52#	TD3001	300	1 0	25C	1 0m⊘	2 5m	5 0	1 0m	100J	2 0	75	1.5u	60	20u		12	100A	.01	TO5
53#	TD3001S	300	1 0	25C	30m⊘	30m	5 0	1 0m	100J	2.0	75	1 5u	60	40u		12	100A	.01	TO5
54#	TDR3	300	1 0	25A	30m⊘	20m	3 0	1 0m	125J	2.0	1.0	1 5u§	500m	20u§	50 ⊘§	12		60m	C16e
55#	TAG1-300	300	1 0	70C	25m	10m	2 0	1 0m	105	2.0	2.0					15	105J	30m†	TO5
56#	TAG2-300	300	1 0	70C	5 0m	1 0m	2 0	1.0m	105	2 0	2 0					15	105	30m†	TO5
57	2N1598	300	1 0	80C		10m	3 0	1.0m	125C	2.0 §	1 0					15 §	125C		TO5
58	RTD0130	300	1 0	80C	5.0m	20m	1.0	10m	100	1 5	1.0	20u	1.0		100	15	100C		TO5
59	RTD0230	300	1 0	80C	10m	1 0m	1 0	1.0m	125	2.5	1 0	.20u	1.0		100	15	125C		TO5
60	RTD0330	300	1 0	80C	10m	20m	1.0	.50m	125	1.5	1.0	.20u	1.0		100	15	125C		TO5
61	RTD0430	300	1 0	80C	5.0m	.10m	80	10m	125	1 4	1 0	.20u	1.0		100	15	125C		TO5
62	RTD0530	300	1 0	80C	3 0m	02m	80	.02m	125	1 4	1 0	.20u	1 0		100	15	125C		TO5
63	RTF0130	300	1 0	80C	5.0m	.20m	1 0	10m	100	1 5	1.0	20u	1 0		100	15	100C		TO5
64	RTF0230	300	1 0	80C	10m	1 0m	1.0	1.0m	125	2 5	1 0	.20u	1.0		100	15	100C		TO5
65	RTF0330	300	1 0	80C	10m	.20m	1 0	50m	125	1.5	1.0	20u	1 0		100	15	125C		TO5
66	RTF0430	300	1.0	80C	5 0m	.10m	80	.10m	125	1.4	1 0	20u	1 0		100	15	125C		TO5
67	RTF0530	300	1.0	80C	3 0m	.02m	.80	02m	125	1.3	1.0	.20u	1 0		100	15	125C		TO5
68	2N4218	300	1 0	85	7.0m	300u	1.0	200u	125	2.0 †	3.1					15 §*	125A	10 ⊘	TO5
69#	T1N300	300	1 0	85C	25m	10m	2 0	1.0m	125J	1.9	2.0	5 0u	1.0	25u	10 §	15	125J	400m	TO5
70	C9C	300	1 1	18A	20m	8 0m	2 0	.90m⊘	125J	1.1 ⊘	1.1			12u		30 §	125J	5 0	M77
71	SCR13A	300 ⊘	1 1	25C	20m	15m	2 0	900u	125C	1.2 △	1.0	1 0u§	30	20u§		60 §	125J	5.0	A130
72	SCRF13A	300 ⊘	1 1	25C	50m	15m	2.0	90m△	125C	1 2 △	1 0	2 0u§	1.0	6 0u§		60 §	125J	5.0	A130
73	2N2013	300 †	1 3	80C	5 0m$	20m	1 0	10m†	125C	1.2	1.0					15 §	150C	05	TO5
74	FT2013	300 △	1 3	80C	5 0m$	20m	1 0	.10m	125C	2 0	1.0					15 §*	150J	05	TO5
75#	GCO3001	300	1 4	25A	50m⊘	25m	3 0	1.0m		2.0	1.0					3.0	100C	5.0	TO5
76#	16T4	300	1.6 △	25C	1.5m⊘	10m	3.0	25m△	25J	2.0	1.0			20u		15	100J		TO5
77#	CR1-301C	300 †	1 6	25C	1.9m	10m	3 0	1.0m	100J	2 0	1 0	1.4u	1 0			15	100A	.10	TO5
78	TI145A3	300	1 6	60C	25m	25m	3 5			2.0	1.0					30	105C	.30	TO5
79#	SF1F11A	300	1 6	62C	10m	1 0m	800m	100u	100J	3.4	10					17	150	100m	TO5
80	MCR914-5	300 ⊘	1 6	65C		8 0m	2 0	1.0m△	125J	1.4 △	1.0	70u	1 0	10u		15 △	125J	1.0	TO5
81#	BTX30-300	300	1 6	70C	25m	10m	2 0	1.0m	125	1.9	2.0					15	125J	30m†	TO5
82♦	ID300	300	1.6	70C	3 0m	200u	800m	100u	110	2.5	4.0	1 0	1 0	40u	20 ⊘	15	110A		TO39
83▼	ID605	300	1 6	70C	3 0m	200u	800m	100u	110	2.5	4.0	1.0u	1 0	40u	20 ⊘	15	110A		TO39
84	2N2328	300	1 6	85C	3 0m$	35m$	1 0 $	.10m△	125C	1.5 §	1.6					15 §	125C	.01	TO5
85	2N2328A	300	1 6	85C	3 0m$	75u$	90 $	100u	125C	1.5 §	1.6					15 §	125C	10m	TO5
86	C6217	300	1.6	85C	2.0m	200u	80	100u	125	1.5	1.6						150		M185b
87#	SF1F11	300	1 6	89C	10m	1 0m	800m	100m	125C	3.4	10					17	125	100m	
88	C511C	300 ⊘	1.6	104C	2 0m	20m	80	01m	25J	2.2 △	4.0					15 §	125J	.10	M181a
89	2N1598A	300	1 6	110C	5.0m	2.0m	3.0	1 0m	125J	2 0	1.0					15 *	150J	.10	TO5
90	SCRFL30	300 ⊘	1 7	80C	50m	15m	2 0	90m	125C	1 2 △	1.0	2.0u§	1.0	12u§		60 §	125C	5.0	A130
91♦#	BT100A300R	300	2 0	75B	15m	10m	2 0	2.0m	100J	1 4	5.0	1 3u	3.0	10u	10 §	40 *	100J	100m†	M625
92	JAN2N4199	300	2.0 △	85C	5 0m⊘	50m	1 5	4.0m	100C	25 †	30		2 0	15u	250 §	100 §	100J	20 ⊘	S17c
93	2N4199	300 △	2 0	90C	3.0m$	100m$	2 0 §	2 0m△	105C	1.5 †	2 0	.20u		20u	250	15 *	105A	20 ⊘	S17a
94	MCR729-5	300 △	2 0 ⊘	105J	15m⊘	50m	1 5	2 0m△§	105J	1.5	2.0	.20u	30		50 §	100 *†	105J	20 ⊘	S258
95	2N3275	300 ⊘	2 2	85C	2 0m	20m	.80	20m△	150	1 8	2 2	3 0u⊘	5 0	22u⊘	1k§	15 §	150C	10	TO5
96♦	C106C2	300	2 4	20C$	3 0m	200u	800m	100u	110	2.2	4.0	1 2u	1 0	40u	8.0 ⊘	20	110	500m	M626
97♦	C106C4	300	2 4	20C$	3 0m	200u	800m	100u	110	2.2	4.0	1.2u	1 0	40u	8 0 ⊘	20	110	500m	M628
98#	TM3004	300	2 5	25A	30m⊘	25m	3 0	3.0m	110J	2 0	8 0	2 0u§	1 0	60u§	50 ⊘§	50		75m	S141d
99	UCR30L	300 △	2.5	25A	50m	50m				1.2	3 0	500n	30	15u	250	60	125J	3 0 ⊘	A253
100	NCM300C	300	3 0	$	15m⊘	30m	1 5	2 0m	100J	1.5	5.0	1 0u⊘		10u⊘	25 §		100	20 ⊘	S17
101#	2SF531	300	3 0	40C	5 0m⊘	20m	2 0	1 5m⊘	125J	1 2	3 0					50	125J	1 ⊘	C63a△
102	RTR0130	300	3 0	65C	100m	50m	3 0	2 0m	100	2 5	10	20u	3 0		100	40	100C		TO66
103	C15C	300	3 0	75C	30m	25m	2 5	4 0m	105J	1 8	15					60	105J	50	TO64
104	NCR300B	300	3 0	80B$		25m	2 5	1 0m	125C	2.0 §	1 0					25 §	100A		S17
105	RTN0130	300	3 0	80C	100m	50m	3.0	2 0m	100	2.5	10	20u	3.0		100	40	100C		TO64
106	RTS0130	300	3 0	80C	100m	50m	3 0	2 0m	100	2.5	10	20u	3.0		100	40	100C		M94
107#	CR3D6	300 ⊘	3 0	95C	5 0m⊘	20m	2 0	1 5m	125J	1 2	3 0					50 △	125J	1.0 ⊘	C63a
108♦	C106C1	300	4 0	20C	3 0m	200u	800m	100u	110	2 2	4 0	1.2u	1 0	40u	8.0 ⊘	20	110	500m	M627
109♦	C106C3	300	4 0	20C	3 0m	200u	800m	100u	110	2 2	4.0	1.2u	1.0	40u	8.0 ⊘	20	110	500m	M625
110♦	IR106C1	300 ⊘	4 0	20C	3 0m	200u	800m	100u	110J	2 8 †	8.0	1.2u	1.0	40u	8.0 ⊘△	25 △	110J	100m†	Y202a

SYMBOLS AND CODES EXPLAINED IN INTERPRETER

6. SILICON CONTROLLED RECTIFIERS

IN ORDER OF (1) PEAK REV. VOLT., (2) MAX. CONT. CUR., (3) TEMPERATURE, (4) TYPE No.

LINE No.	4 TYPE No	1 PRV and VBO (V)	MAX. CONT. CURRENT 2 Idc (A)	3 at TEMP (°C)	MAX. HOLD. CUR Ih @ 25°C (A)	MAX. GATE FIRING SPEC at 25°C Igf (A)	Vgf (V)	MAX SAT I Ir@PRV and Is@VBO (A)	at TEMP (°C)	MAX. FWD. VOLT. DROP at 25°C Vf (V)	@ If (A)	SWITCHING TIME at 25°C Ton (s)	for If (A)	Toff (s)	MIN. dV/dt @ 25°C (V/us)	ABS. MAX. RATINGS 1Cy PK SURGE I@25°C (A)	MAX TEMP (°C)	MAX GATE POWER (W)	DWG. No.
1♦	IR106C2	300 Ø	4.0	20C	3 0m	200u	800m	100u	110J	2.8 †	8.0	1.2u	1 0	40u	8.0 ØΔ	25 Δ	110J	100m†	M626a
2♦	IR106C3	300 Ø	4 0	20C	3 0m	200u	800m	100u	110J	2 8 †	8 0	1 2u	1 0	40u	8.0 ØΔ	25 Δ	110J	100m†	M625
3♦	IR106C4	300 Ø	4 0	20C	3 0m	200u	800m	100u	110J	2 8 †	8 0	1.2u	1.0	40u	8.0 ØΔ	25 Δ	110J	100m†	M628a
4▼	IR106C41	300 Ø	4 0	20C	3 0m	200u	800m	100u	110J	2 8 †	8 0	1 2u	1 0	40u	8 0 ØΔ	25 Δ	110J	100m†	M629
5	TC106C1	300	4 0 Δ	75C	3 0m	200u	800m	10u	25	2.2	4.0 †	1 0u	1.0	100u	100	20	150S	100m†	M627
6	TC106C2	300	4 0 Δ	75C	3 0m	200u	800m	10u	25	2.2	4 0 †	1.0u	1.0	100u	100	20	150S	100m†	M626
7	TC106C3	300	4 0 Δ	75C	3.0m	200u	800m	10u	25	2.2	4 0 †	1 0u	1 0	100u	100	20	150S	100m†	M625
8	TC106C4	300	4 0 Δ	75C	3 0m	200u	800m	10u	25	2.2	4 0 †	1 0u	1 0	100u	100	20	150S	100m†	M628
9	2N1603	300	4 0	80C		10m	3 0	1 0m	125C	2.0 §	1 0					25 §	125C		TO64
10	SCR33A	300 ☑	4 0	80C	25m	15m	2 0	1 0mΔ	125C	2.0 Δ	3 0	1 0u☑	60			60 §	125J	5 0	S62
11	SCRF33A	300 ☑	4 0	80C	50m	15m	2 0	1 0mΔ	125C	2 0 Δ	3 0	2.0u§	1.0	6 0u§		60 §	125J	5 0	S62
12#	T3N3C00	300	4 0	100B	25m	20m	3.0			1.2	3 0	2.0u	3 0	17u	15	55	125J	2 Ø	S62
13	3TCRG	300 ☑	4 2	60B	50m	50m	3 0	2 0mØ	125J	1 4 Ø	3 0 §	2.0u	3 0	30u		40 *	150S	5 Ø	S56
14#	TM3007	300	4.5	25A	40mØ	40m	3 0	3 0m	110J	2.0	15	2 0u§	6 0	50u§	50 Ø§	80		120m	S141d
15#	TM3007S	300	4 5	25A	50mØ	40m	3 0	3 0m	110J	2 5	15	2 0u		15u	100 §	80		120m	S141d
16#	TRA73	300	4 5	25A	40mØ	40m	3 0	3 0m	110J	2 0	15	2 0u§	6 0	40u§	50 Ø§	80		120m	M94g
17#	TRA73D	300	4 5	25A	40mØ	40m	3.0	3 0m	110J	2 0	15	2 0u§	6 0	40u§	50 Ø§	80		120m	S131
18	2N1776	300	4 7 Δ	60C		30m$	2 0 $	4 0mØ	125C	1 9 †	4 7					60 *	125C	.50	TO64
19	3RC30	300 ☑	4 7 Δ	92C	5 0mØ	15m	2 0	2.0m	105C	2.0	9 4 †					30 Δ	105J	50 †	TO64
20	2N1776A	300	4 7 Δ	105C	80m$☑	30m$	2.0 $	4 0mØ	150C	1 9 †	4 7					60 *	150C	.50	TO64
21	3RC30A	300 ☑	4 7 Δ	105C	5 0mØ	15m	3 0	4 0m	125C	2 0	9.4 †					40 Δ	125J	.50 †	TO64
22	RTR0230	300	5 0	65C	100m	50m	3.0	2 0m	100	2 5	15	20u	5 0		100	60	100C		TO66
23	RTR0330	300	5 0	65C	25m	15m	1 5	1 0m	100	2 0	15	20u	5 0		100	60	100C		TO66
24	RTR0430	300	5 0	65C	100m	50m	3.0	2 0m	125	2 5	15	20u	5 0		100	60	125C		TO66
25	2N4171	300	5.0	70C	60m$	50m$	2.5 $	2 0m	100C							100 *	100C	5 0 Ø	S262
26	2N4179	300	5 0	70C	60m$	50m$	2 5 $	2 0m	100C							100 *	100C	5 0 Ø	S263
27#	2SF266	300	5 0	73C	10mØ	30m	2 5	3 0mØ	100J	1 3	5 0					90	100J	5 Ø	S141b
28	2N4155	300	5 0	75C	60m$	50m$	2 5 $	2 0m	100C							100 *	100C	5 0 Ø	C84
29	2N4163	300	5 0	75C	60m$	50m$	2 5 $	2 0m	100C							100 *	100C	5 0 Ø	C85
30	2N4187	300	5 0	75C	60m$	50m$	2 5 $	2 0m	100C							100 *	100C	5 0 Ø	S264
31	2N4195	300	5 0	75C	60m$	50m$	2 5 $	2 0m	100C							100 *	100C	5 0 Ø	M363
32	RTN0230	300	5 0	80C	100m	50m	3 0	2 0m	100	2 5	15	20u	5 0		100	60	100C		TO64
33	RTN0330	300	5 0	80C	25m	15m	1 5	1 0m	100	1.8	15	20u	5.0		100	60	100C		TO64
34	RTN0430	300	5 0	80C	100m	50m	3 0	2 0m	125	2 5	15	20u	5 0		100	60	125C		TO64
35	RTN0530	300	5 0	80C	25m	15m	1 5	1 0m	125	1 8	15	20u	5 0		100	60	125C		TO64
36	RTN0630	300	5 0	80C	25m	15m	1 5	1 0m	150	1.8	15	.20u	5 0		100	60	150C		TO64
37	RTR0530	300	5 0	80C	25m	15m	1 5	1 0m	125	2 0	15	.20u	5 0		100	60	125C		TO66
38	RTS0230	300	5 0	80C	100m	50m	3 0	2 0m	100	2.5	15	20u	5 0		100	60	100C		M94
39	RTS0330	300	5 0	80C	25m	15m	1 5	1.0m	100	1 8	15	20u	5 0		100	60	100C		M94
40	RTS0430	300	5.0	80C	100m	50m	3 0	2 0m	125	2 5	15	20u	5 0		100	60	125C		M94
41	RTS0530	300	5 0	80C	25m	15m	1 5	1 0m	125	1.8	15	20u	5 0		100	60	125C		M94
42▼	TIC106C	300	5 0	80	5 0m	200u	1 0	1.0m	110C	1 7	5 0				10 Ø	30	110C	1 3	
43	CM103	300	5 0	100C	3 0m	20m	80	30m†	150C	2 5	5 0	1 0u☑	1 0	50u☑	100	30	150A		TO59
44	CM109	300	5 0	100C	3 0m	.20m	80	50m†	150C	3 0	5.0	50u	1 0	50u	150 Ø	20	150A		TO59
45#	CR5-302B	300 †	5.0	125C	150m	80m	3 0	10m	125C	3 0	5 0	2 0u	5 0	12u	20		125C	1 0	TO48
46#	2SF226	300	6.0	25C		25m	3 0	2 5m	100C	1 2 Δ	3 0					50	100	5 Ø	S141
47#	TM3010	300	6.0	25A	40mØ	40m	3 0	3 0m	110J	2.0	20	2.0u§	6.0	50u§	50 Ø§	100		120m	S141d
48#	TRA3	300	6 0	25A	50mØ	40m	3 0	3 0m	110J	2 0	20	2 0u§	6 0	50u§	50 Ø§	100		120m	M94g
49#	TRA3D	300	6 0	25A	50mØ	40m	3 0	3 0m	110J	2.0	20	2 0u§	6 0	50u§	50 Ø§	100		120m	S131
50	NCF300C	300	6 0	70B$		30m$	2 0 $	4.5mØ	60C	1.9 $	4 7			12u☑		60	100A	50	S17
51#	T6F300C	300	6 0	85C	60m	40m	2 0	2.0m	125J	2.5	20	1.0u	10	12u§	400 §	100 §	125J	15	S131j%
52#	T6N300C	300	6 0	85C	60m	20m	2 0	2 0m	125J	2 5	20	1 0u	10	17u§	50 §	100 §	125J	15	S131j%
53#	T6N300H	300	6 0	85C	60m	20m	2 0	2 0m	125J	2 5	20	1 0u	10	17u§	50 §	100 §	125J	15	M94e%
54#	TW6N300C	300	6 0	85C	60m	50m	3 0	2 0m	125J	2.5	10				5 0 §	60 §	125J	3.0	S131j%
55#	TW6N300H	300	6 0	85C	60m	50m	3 0	2.0m	125J	2.5	10				5 0 §	60 §	125J	3 0	M94e%
56#	CR5-301B	300 †	6 0	95C	150m	80m	3 0	10m	125C	3.0	5 0	2 0u	5 0	12u			125C	1 0	TO48
57#	TP3004	300	6 0	100C	100m	40m	3 0	3.0m		1 2	4.0	2 0u	4 0	30u	100 §Ø	80	125C	.50	S18a
58▼	GCS30	300	6 3	80C	50m	25m	1 5	1 0m	100	1 8	20	1 5u	6 0	4.0u	200 Ø	60 §	110A	500m†	S307
59#	4RCM30	300	6 3	85B	45m	85m	3 0	2 0m	105	1 9	4 0			20u	20	50	105	50	TO64
60#	BTY79-300R	300	6 4	84B	10m	25m	2 5					3 0u	10	.15u		80 *	125J	5.0 Ø	TO64
61#	BTY34-300R	300	6 4	110B		30m	3.0	5.0m	150J	2 3	20	3.0u	10	20u		50 *	150J	.5 †	TO48
62#	2SF16	300 ☑	6 5	60B		20m	2 1	4.0m	100J	2 3	20					50	100J	.50	S105a
63#	GCO3005	300	7.0	25A	100mØ	100m	3 0	1 5m		2 0	5.0					35	100J	25	TO48
64	5TCRG	300 ☑	7 0	60B	50m	50m	3 0	2 0mØ	125J	.83 Ø	5 0 §	2.0u	5 0	30u		60 *	150S	5 Ø	S56
65	SCR53A	300 ☑	7 0	60C	25m	20m	2 0	1 0mΔ	125C	1 9 Δ	15	1 0u§	100	20u§		100 §	125J	10	S121
66	SCRF53A	300 ☑	7 0	60C	50m	20m	2 0	1 0mΔ	125C	1.9 Δ	15	2.0u§	10	6 0u§		100 §	125J	10	S121
67	SCRF530	300 ☑	7 0	60C	50m	25m	2 0	1 0m	125C	1 9 Δ	15	2.0u§	10	12u§		100 §	125J	10	S121
68	TI3013	300	7.0	60C	30m	25m	3 0	1.0m	125	1 8	5 0						125C	5.0 Ø	M245
69	C12C	300	7 0 Δ	70C	8.0mØ	15m	2 0	9.0m	125J	1.8	15	1.0u	10	12u§		60	125J	5.0	S17
70	2N3938	300	7 0	80C	110m	60m	3.2	1 0m	125C	2.3	7 0	3 0u		8.0u§		100 *§	125C	50	TO64
71	JAN2N1776A	300	7 0	105	25m	30m	2 0	1 0m	25	1.8	14 †	5 0u	5 0	30u	5 0	60	150A		TO64
72	5RC30	300 ☑	7 4 Δ	60C	5.0mØ	15m	2 0	2 0m	105C	1 9	15 †	2.5u	60		20	60 Δ	105J	50 †	TO64
73	5RCF30A	300 ☑	7 4 Δ	60C	5.0mØ	15m	1 4	2 0m	125C	1.9	15 †	2 5u	5 0	12u		60 Δ	125J	50 †	TO64
74	5RC30A	300 ☑	7 4 Δ	80C	5 0m	15m	1.4	4 0m	125C	1 9	15 †	2 5u				75 Δ	125J	50 †	TO64
75	C20C	300	7 4 Δ	80	30m	25m	1.5	2 3m	100J	1 8	10					80 §	100J	50	S131
76	C22C	300	7 4 Δ	80	30m	25m	1.5	2 3m	100J	1 8	10					80 §	100J	.50	M94
77#	CR4-301A	300 †	7 4 Δ	80	30m	25m	2.0	2 5m	100J	1 8	10	1.1u	8 0	50u	20 Δ	80 Δ	125J	5 0 Ø	M94
78#	CR4-301B	300 †	7 4 Δ	80	30m	25m	2 0	2 5m	100J	1.8	10	1 1u	8.0	50u	20 Δ	80 Δ	125J	5 0 Ø	S131
79	2N3756	300	7 5	100	200m	200m	2 3	5 0m	120A				10	75u	200	250 *	120A	2 0	TO48
80#	SF5F11	300	8 0	24		20m	2 0	4.0m	125J	2 0	20					60	125J	500m	S141a
81	MCR2315-5	300 Δ	8 0 Δ	70C	50m	40m	1.5	3 0m	100J	1 6	5.0	1.0u	5.0	15u	50 Ø§	80 Δ	100J	5.0 Ø	S230
82	MCR2614L5	300 Δ	8.0 Δ	70C	50m	40m	1 5	3 0m	100J	1 6	5 0	1 0u	5 0	15u	50 Ø§	80 Δ	100J	5 0 Ø	C85a
83▼	TIC116C	300	8 0	70	40m	20m	1 5	2 0m	110C	1 7	8 0				100 Ø	80	110C	5 0	
84	2N4318	300	8.0	85	25m	15m	1 2	2 0m†	150	2 0	8 0				200	60 §*	150A	5 †	C63d
85#	T6F300H	300	8 0	85C	60m	40m	2 0	2 0m	125J	2.5	20	1.0u☑	10	12u§	400 §	75 §	125J		M94e%
86#	T8F300C	300	8 0	85C	60m	40m	2.0	2 0m	125J	2 0	20	1 0u	10	12u§	400 §	120 §	125J	15	S131j%
87#	T8N300C	300	8 0	85C	60m	20m	2 0	2 0m	125J	2 0	20	1 0u	10	18u§	50 §	120 §	125J	15	S131j%
88#	T8N300H	300	8.0	85C	60m	20m	2 0	2 0m	125J	2 0	20	1 0u	10	18u§	50 §	120 §	125J	15	M94e%
89#	TW8N300C	300	8.0	85C	60m	50m	3.0	2 0m	125J	1.9	10				5.0 §	80 §	125J	3.0	S131j%
90#	TW8N300H	300	8.0	85C	60m	50m	3.0	2 0m	125J	1 9	10				5.0 §	80 §	125J	3 0	M94e%
91▼	HEPR1244-RT	300	8 0	100J	25mØ§	20m§										100 §	100		S230
92	MCR2604-5	300	8 0	100J	25m	20m	1 5	2 0m	100J	1 3	5.0	1 0u	5 0	12u	50	100	100J	5 0	M304a
93	MCR2605-5	300	8 0	100J	25m	20m	1.5	2 0m	100J	1 3	5.0	1 0u	5.0	12u	50	100	100J	5 0	M305
94	SE9202	300 Δ	8 5	55C	75m	25m	1.2	2 0m†Δ	125C	2 2	10	80u	5 0	15u	200	60 *§	125C	5 †	C63d
95#	BTX64/300R	300	8 5	85B	10mØ§	65m	3 5	10m	125J	3 0	50	40u	10	10u	65	140 *	125J	5 †	TO48
96#	BTX75-300R	300	8 5	110B	10m§Ø	65m	3 5	10m	150J	3.0	50	3 0u	10	25u		140	150J	5 †	TO48
97#	TP3006	300	9 0	100C	100m	40m	3 0	3 0m		1 2	6 0	2 0u	6 0	30u	100 §Ø	100	125C	50	S18a
98#	T8F300H	300	9 5	85C	60m	40m	2 0	2 0m	125J	2 0	20	1.0u☑	10	12u§	400 §	95 §	125J		M94e%
99	NCF300D	300	10		15mØ	50m	3 5	5 0m	100	1 2	10	500n	10	6.0u	25 §	125	100A	.50 †	TO48
100	NCM300E	300	10		25mØ	150m	2 0			1 2	10	500n	10	6 0u	200 §		120A	1.0 †	TO48
101#	BTY86	300	10	25A	20m§	25m§	3 5	5 0mØ	100J	1.2	16	4 5u§	50	20u§		120	100A	5.0	S98
102#	TRA13	300	10	25A	50mØ	80m	3 0	3 0m	110J	2.0	30	2 0u§	10	50u§	50 Ø§	125		240m	M94g
103#	TRA13D	300	10	25A	50mØ	80m	3 0	3 0m	110J	2 0	30	2 0u§	10	50u§	50 Ø§	125		240m	S131
104	2N1848	300	10 Δ	35C		150m$	3 5 $	5 0mØ	35C	2 5 †	10					125 *	100C	5 †	TO48
105#	CR10B6	300	10	59C		30m	2 5	3 0m	100J	1.6	30					150 Δ	100J	5.0 Ø	S334
106#	2SF276	300	10	63C	10mØ	30m	2 5	3 0mØ	100J	1 2	10					90	100J	5 Ø	S141b
107#	2SF276A	300	10	63C	10mØ	30m	2 5	3 0mØ	100J	1 2	10		10	15u☑	100 Δ	90	100J	5 0 Ø	S141b
108	RTT0130	300	10	65C	200m	50m	3 0	2 0m	100	2 5	30	20u	10		100	100	100C		TO48
109	RTT0430	300	10	65C	200m	50m	3 0	2 0m	125	2 5	30	20u	10		100	100	125C		TO48
110	RTU130	300	10	65C	20	50m	3 0	2 0m	100	2.5	30	200n	10		100	100	100C		S131

SYMBOLS AND CODES EXPLAINED IN INTERPRETER

6. SILICON CONTROLLED RECTIFIERS

IN ORDER OF (1) PEAK REV. VOLT., (2) MAX. CONT. CUR., (3) TEMPERATURE, (4) TYPE No.

LINE No	4 TYPE No	1 PRV and VBO (V)	MAX. CONT. CURRENT 2 Idc (A)	3 at TEMP (°C)	MAX HOLD. CUR Ih @ 25°C (A)	MAX. GATE FIRING SPEC at 25°C Igf (A)	Vgf (V)	MAX SAT I Ir@PRV and Is@VBO (A)	at TEMP (°C)	MAX. FWD. VOLT DROP at 25°C Vf (V)	@ If (A)	SWITCHING TIME at 25°C Ton (s)	for If (A)	Toff (s)	MIN dV/dt @ 25°C (V/us)	ABS. MAX. RATINGS 1Cy PK SURGE I@25°C (A)	MAX TEMP (°C)	MAX GATE POWER (W)	DWG. No.
1	RTU0430	300	10	65C	200m	50m	3 0	2.0	125	2.5	30	200n	10		100	100	125C		S131
2▼#	CR10CY6	300	10	66C		40m	2 5	4.0m	125J	2.5	30		10	15u⊘	100 △	140 △	125J	5.0 ∅	S350
3#	CR10EY6	300	10	66C		40m	2 5	4 0m	125J	2 5	30		10	15u⊘	100 △	140 △	125J	5 0 ∅	S334
4#	CR5-302AB	300	10	70C	20m∅	80m	3 0	10m	100C	2 0	16	2.0u	20	20u⊘	20	90	125	5.0 ∅	
5#	CR5-302BB	300	10	70C	20m∅	80m	3 0	10m	100C	2 0	16	2.0u	20	15u⊘	20	90	125	5.0 ∅	
6#	CR5-302CB	300	10	70C	20m∅	80m	3 0	10m	100C	2.0	16	2 0u	20	12u⊘	20	90	125	5.0 ∅	
7#	CR5-302DB	300	10	70C	20m∅	80m	3 0	10m	100C	2.0	16	2 0u	20	8.0u⊘	20	90	125	5.0 ∅	
8#	CR5-302EB	300	10	70C	20m∅	80m	3.0	10m	100C	2.0	16	2.0u	20	6.0u⊘	20	90	125	5.0 ∅	
9#	CR5-3029B	300	10	70C	20m∅	80m	3.0	10m	100C	2 0	16	2 0u	20	4 0u⊘	20	90	125	5.0 ∅	
10#	CR6-403RB	300	10	70C	28m∅	80m	3 0	5 0m†	100C	2.0	16	2 3u	20	80u	20	100	125	5.0	
11#	CR6-403RBA	300	10	70C	28m∅	80m	3 0	5 0m†	100C	2 0	16	2 3u	20	80u	200	100	125	5.0	
12	2N1848A	300	10 △	80C		150m$	3 7 $	5 0m∅	80C	2.5 †	10					125 *	125C	.5 †	TO48
13▼#	CR10C6	300	10	84C		30m	2 5	3 0m	125J	1.6	30				20 △	150 △	125J	5.0 ∅	S350
14#	T10N300C	300	10	85C	60m	20m	2 0	2 0m	125J	1.8	20	1 0u	10	20u§	50 §	140 §	125J	15	S131j%
15#	T10N300H	300	10	85C	60m	20m	2 0	2 0m	125J	1 8	20	1 0u	10	20u§	50 §	140 §	125J	15	M94e%
16#	TW10N300C	300	10	85C	60m	50m	3.0	2 0m	125J	1 7	10				5.0 §	100 §	125J	3.0	S131j%
17#	TW10N300H	300	10	85C	60m	50m	3 0	2 0m	125J	1.7	10				5.0 §	100	125J	3.0	M94e%
18#	CR10-302B	300 †	10	125C	150m	80m	3.0	10m	125C	2 0	10	2 0u	10	30u	20		125C	1.0	TO48
19#	2SF26	300 ⊘	11	50B		40m	3 0	10m	100J	2.8	50					125	100J	500m	S236a
20#	2SF753	300	11	50B		40m	3 0	4 5m	100J	2 8	50		5 0	10u	20	125	125J	.50	S18d
21#	2SF753A	300	11	50B		40m	3.0	4.5m	100J	2.8	50		5.0	5 0u	20	125	125J	50	S18d
22	UCR30	300 △	12	55C	50m	50m				1 2	3 0	500n	30	15u	250	60	125J	10 ⊘	S296
23#	CR8-301C	300 †	12	70C	15m∅	25m	2 5	2 5m	125J	2.0	20	1 1u	8 0	50u	20 △	80 △	125J	5.0 ∅	TO64
24▼	TIC126C	300	12	70	40m	20m	1 5	2 0m	110C	1.4	12				100 ∅	100	110C	5 0	
25#	BTX65/300R	300	12	85B	10m§∅	65m	3 5	10m	125J	2 0	50	40u	10	10u	65	200	125J	.5 †	TO48
26#	CR10-301B	300 †	12	85C	150m	80m	3 0	10m	125C	2 0	10	2 0u	10	30u			125C	1.0	TO48
27#	CR10-302AB	300	12	85C	20m∅	80m	3.0	10m	125C	2.0	50	2 6u	32	20u⊘	20	120	125	5 0 ∅	
28#	CR10-302BB	300	12	85C	20m∅	80m	3 0	10m	125C	2 0	50	2 6u	32	15u⊘	20	120	125	5 0 ∅	
29#	CR10-302CB	300	12	85C	20m∅	80m	3 0	10m	125C	2 0	50	2.6u	32	12u⊘	20	120	125	5 0 ∅	
30#	CR10-302DB	300	12	85C	20m∅	80m	3 0	10m	125C	2.0	50	2.6u	32	8 0u⊘	20	120	125	5.0 ∅	
31#	CR10-302EB	300	12	85C	20m∅	80m	3 0	10m	125C	2 0	5 0	2 6u	32	6.0u⊘	20	120	125	5 0 ∅	
32#	CR10-3029B	300	12	85C	20m∅	80m	3 0	10m	125C	2 0	5 0	2 6u	32	4.0u⊘	20	120	125	5 0 ∅	
33#	BTX76-300R	300	12	110B	10m§∅	40m	3 0	10m	150J	2.0	50	3 0u	10	25u		200	150J	5 †	TO48
34#	8RCM30	300	12.6	65B	65m	85m	3 0	6 0m	105	2 6	8 0			20u	20	100	105	50	TO48
35#	8RCV30	300	12 6	105	50m	45m	2 9	6 0m	105	2.6			100	10u	100	100	105	50	TO48
36	2N1848B	300	13 △	80C		75m	3 7 $	1 0m∅	125C	1 8 †	13					150 *	125C	5 †	TO48
37#	CR12-403RB	300	14 5	75C	28m∅	60m	3 0	5 0m†	125C	2 0	32	2.3u	20	85u	20	160	125	5 0	
38#	CR12-403RBA	300	14 5	75C	28m∅	60m	3 0	5.0m†	125C	2.0	32	2.3u	20	85u	200	160	125	5 0	
39#	2SF76	300	15	25C		50m	3 0	5.0m	100C	1.2 △	7 0					100	100	5 ∅	S94
40#	BTY87/300R	300	15	61A	10m∅§	65m	3 5	10m	125J	3 0	50	3.0u§	10	15u	100	106	125J	50	TO48
41#	BT101-300R	300 #	15 △	85B		10m	2 0	1.5m†	125J	2 3	20					55 §	125J	5 0 ∅	TO64
42#	BT102-300R	300 #	15 △	85B		50m	2.5	1 5m†	125J	2 3	20					55 §	125J	5 0 ∅	TO64
43#	BTY90	300	16	25A	10m§	25m§	3 0	5 0m∅	125J	86	16	4 5u§	50	20u§		140	125A	5 0	S98
44#	TR3	300	16	25A	50m∅	80m	3.0	3 0m	125J	2 0	50	2.0u§	10	50u§	50 ∅	250		240m	S313
45#	TR3015S	300	16	25A	100m∅	80m	3.0	5 0m	125J	2.5	50	2.0u§	10	20u§	200 §	250		240m	S313
46#	TRA23	300	16	25A	50m∅	80m	3.0	3 0m	110J	2 0	50	2.0u§	10	50u§	50 ∅§	250		240m	M94g
47#	TRA23D	300	16	25A	50m∅	80m	3.0	3 0m	110J	2 0	50	2.0u§	10	50u§	50 ∅§	250		240m	S131
48#	SF10F11	300	16	26		80m	3.5	10m	100C	3.0	50					113	100J	500m	S18
49	2N687	300	16 △	65C		80m$	3 0 $	5 0m∅	125C	2 0 ∅	16					150 *	125C	50	TO48
50	JAN2N687	300	16 △	65C	50m	80m	3 0	2.0m	25	2 0 †	50	5 0u	10	30u		150	125A	5 †	TO48
51	10RC30	300 ⊘	16 △	65C	10m∅	40m	3 0	5.0m∅	105C	2 3 †	31					125 △	105J	50 †	TO48
52	RTT0230	300	16	65C	200m	50m	3 0	2 0m	100	2 5	50	20u	16		100	150	100C		TO48
53	RTT0330	300	16	65C	50m	25m	2 0	1 0m	100	2 0	50	.20u	16		100	150	100C		TO48
54	RTT0530	300	16	65C	200m	50m	3 0	2.0m	125	2 5	50	20u	16		100	150	125C		TO48
55	RTT0630	300	16	65C	50m	25m	2.0	1 0m	125	2 0	50	20u	16		100	150	125C		TO48
56	RTU0230	300	16	65C	20	50m	3 0	2 0m	100	2 5	50	200n	16		100	150	100C		S131
57	RTU0330	300	16	65C	50m	25m	2 0	1.0m	100	2 0	50	200n	16		100	150	100C		S131
58	RTU0530	300	16	65C	20	50m	3.0	2 0m	125	2 5	50	200n	16		100	150	125C		S131
59	RTU0630	300	16	65C	50m	25m	2 0	1 0m	125	2 0	50	200n	16		100	150	125C		S131
60	2N3652	300	16	70	350m$	500m$	4.5	5 5m	120				100	15u	200	180 *	120C	1.0	TO48
61	2N3657	300	16	70	350m$	500m$	4.5	5 5m	120				100	10u	200	180 *	120C	1 0	TO48
62	MCR3818-5	300	16	70C	50m	40m	1 5			1 2	20	1 0u	20	15u	50 ∅§	240 §	100J	500m†	M94b
63	MCR3918-5	300	16	70C	50m	40m	1 5			1 2	20	1 0u	20	15u	50 ∅§	240 §	100J	500m†	S131k
64#	BTY91/300R	300	16	75B	10m∅§	40m	3 0	10m	125J	2.0	50	3 0u§	10	20u§	100	136	125J	5.0	TO48
65#	11RC30	300	16 △	85B	20m	40m	3 0	5 0m		2 3	10	3 0u	10	25u	20	125	125A	5.0 ∅	S141c
66	C36C	300	16 △	100	20m∅	50m	3 5	5 0m∅	100J	1.2		4 5u⊘	10	20u		125	100B	50	S18
67▼	HEPR1306-RT	300	16	100J	10m∅§	10m§										250 §	100		S131r
68	16C30	300	16	125J	50m	15m	2 0	10m	125J	2 0	50	7.0u	16	75u§		150	125J	5.0 ∅	TO48#△
69	16C30B	300	16	125J	50m	40m	2.0	10m	125J	2.0	50	7.0u	16	75u§	25	150	125J	5.0 ∅	TO48#△
70	16C30C	300	16	125J	50m	40m	2 0	10m	125J	2 0	50	7 0u	16	75u§		150	125J	5.0 ∅	TO48#△
71#	CR16-302B	300 †	16	125C	120m	40m	3.0	10m	125C	2.0	16	2 0u	10	20u	20		125C	1 0	TO48
72#	T14F300C	300	17	85C	120m	50m	3 0	10m	125J	2 5	50	1 5u⊘	10	15u§	200 §	200 §	125J		S63g%
73#	T14F300E	300	17	85C	120m	50m	3 0	10m	125J	2 5	50	1.5u⊘	10	15u§	200 §	200 §	125J		M329%
74	2N687A	300	18 △	65C	50m$⊘	40m	3 0 $	1.0m∅	65C	2 1 †	18				200	250 *	125C	5 †	TO48
75	TIX93	300	18	75C	40m	40m	3 5	1 0m	125	1.6	18				100		125C	5 ∅	M246
76#	12RCM30	300	18 8	65B	65m	85m	3 0	6 0m	105	2.2	12			20u	20	150	105	.50	TO48
77#	BTX12/300R	300	20	25$	40m§	50m	3 0			3.5 §	175	4 0u§	10	10u§	20 §	250	125J	5 0	S182
78#	CR20A6	300	20	57C		50m	3 0	3.0m	100J	1.8	60					300 △	100J	5 0 ∅	S106b
79#	2SF296	300	20	58C	10m∅	50m	3 5	3 0m∅	100	1.3	20					300	100J	5 ∅	S106b
80#	2SF296A	300	20	58C	10m∅	50m	3 5	3.0m∅	100	1 3	20		20	15u⊘	100 △	300	100	5 0 ∅	S106b
81	MCR649-5	300 ⊘	20	65C		80m	3 5	5.0m△	100	70 ∅	13 §					260 △	100J	5 ∅	TO41
82#	CR20EY6	300	20	74C		50m	3.0	6 0m	125J	2 5	60		20	15u⊘	100 △	300 △	125J	5.0 ∅	S106b
83#	6TW3	300	20	75C$	25m	50m	2.0	10m	100J	1.8 §	50	2 5u§	20	20u§		300	150S	2.0	
84#	CR16-301B	300 †	20	75C	120m	40m	3 0	10m†	125C	2.0	16	2.0u	10	30u			125C	1.0	TO48
85#	CR16-302AB	300	20	75C	7 0m∅	60m	3 0	10m	125C	2.0	50	2.5u	50	20u⊘	20	160	125	5 0 ∅	
86#	CR16-302BB	300	20	75C	7 0m∅	60m	3 0	10m	125C	2 0	50	2.5u	50	15u⊘	20	160	125	5.0 ∅	
87#	CR16-302CB	300	20	75C	7.0m∅	60m	3 0	10m	125C	2.0	50	2.5u	50	12u⊘	20	160	125	5.0 ∅	
88#	CR16-302DB	300	20	75C	7 0m∅	60m	3 0	10m	125C	2.0	50	2 5u	50	8 0u⊘	20	160	125	5.0 ∅	
89#	CR16-302EB	300	20	75C	7 0m∅	60m	3 0	10m	125C	2.0	50	2 5u	50	6 0u⊘	20	160	125	5 0 ∅	
90#	CR16-3029B	300	20	75C	7.0m∅	60m	3 0	10m	125C	2.0	50	2.5u	50	4 0u⊘	20	160	125	5 0 ∅	
91#	BTX81-300R	300	20	85B	100m	80m	3 5			1 8	50						125J	1.0 †	S94a
92	TCR302	300	22	25C	25m∅§	50m	3 0	3 0m∅	100C	820m∅	20 §	7.5u		12u		150	125C	500m	S148
93#	2SF36A	300 ⊘	22	64B		40m	3 0	10m	125J	2.0	50					150	125J	500m	S236a
94#	2SF763	300	22	64B		40m	3 0	4 5m	125J	2 0	50		10	10u	20	150	125	50	S18d
95#	2SF763A	300	22	64B		40m	3 0	4 5m	125J	2 0	50		10	5 0u	20	150	125	50	S18d
96#	TS335	300	22 5	25A	20m∅	80m	3 0	6 0m	125J	2 2	70	5 0u§	15	50u§	50 ∅§	250		240m	S313
97#	CR18-403RB	300	23	70C	28m∅	40m	3 0	5 0m†	125C	2 1	57	2 3u	20	85u	20	180	125	5 0	
98#	CR18-403RBA	300	23	70C	28m∅	40m	3 0	5 0m†	125C	2.1	57	2 3u	20	85u	200	180	125	5.0	
99#	T18F300C	300	23	85C	120m	50m	3 0	10m	125J	2.3	60	1 5u⊘	15	20u§	50 §	300 §	125J		S63g%
100#	T18F300E	300	23	85C	120m	50m	3 0	10m	125J	2 3	60	1 5u⊘	15	20u§	50 §	300 §	125J		M353%
101	MCR1718-5	300 △	25	$	6.0m∅	50m	7 0			1.3	25				100 ∅	100	125J	1.0 †	TO48
102#	2SF136	300	25	25C		50m	3 0	5 0m	125C	1 2 △	12					150	125	5 ∅	S94
103	C37C△	300	25 △	25C		80m	3.5	10m	105	2 3	30					125	105C	50	TO48
104	10RC30A	300 ⊘	25 △	45C	10m∅	90M	2.5	5 0m∅	125C	2 8	50 †	3 0u	10	30u	25 §	200 △	125J	.50 †	TO48
105	10RCF30A	300 ⊘	25 △	45C	10m∅	90m	2 5	5 0m∅	125C	2.8	50 †	3.0u	10	12u§	25 §	200 △	125J	500m†	TO48
106#	SF16F11	300	25	57		40m	3 0	10m	125C	1 9	50					135	125J	500m	S18
107#	2N687AS	300	25	60	50m	40m	3 0	1 5m	125	1 7	30	1 4u	10	12u	200	200	125	5 0	TO48
108#	2N687S	300	25	60	50m	40m	3 0	1.5m	125	1.7	30	1 4u	10	12u	25	200	125	5.0	TO48
109	TI3040	300 †	25 △	60C	130m∅	100m	4.0	3 0m	125C	2 5	25	2 5u	25	2.9u	200	200	125C	5 ∅	TO48
110	C30C	300	25 △	70C	50m	25m	1.5	2 3m	100J	1 5	50					250	100J	.50	S131

SYMBOLS AND CODES EXPLAINED IN INTERPRETER

6. SILICON CONTROLLED RECTIFIERS

IN ORDER OF (1) PEAK REV. VOLT., (2) MAX. CONT. CUR., (3) TEMPERATURE, (4) TYPE No.

LINE No	4 TYPE No	1 PRV and VBO (V)	MAX CONT. CURRENT 2 Idc (A)	3 at TEMP (°C)	MAX. HOLD CUR Ih @ 25°C (A)	MAX. GATE FIRING SPEC at 25°C Igf (A)	Vgf (V)	MAX SAT I Ir@PRV and Is@VBO (A)	at TEMP (°C)	MAX. FWD. VOLT DROP at 25°C Vf (V)	@ If (A)	SWITCHING TIME at 25°C Ton (s)	for If (A)	Toff (s)	MIN. dV/dt @ 25°C (V/us)	ABS. MAX RATINGS 1Cy PK SURGE I@25°C (A)	MAX TEMP (°C)	MAX GATE POWER (W)	DWG. No.
1	C31C	300	25 △	70C	50m	9 0m	1 5	2 3m	100J	1 5	50					250	100J	.50	S131
2	C32C	300	25 △	70C	50m	25m	1 5	2.3m	100J	1 5	50					250	100J	.50	M94
3	C33C	300	25 △	70C	50m	9 0m	1 5	2 3m	100J	1 5	50					250	100J	50	M94
4	C34C1	300	25	70	50m	25m	1 5	1 0m	100	1 5	50		35	20u⊘	20	250	100J	5.0 ⊘	M94
5	C34C2	300	25	70	50m	25m	1 5	1 0m	100	1 5	50		35	20u⊘	20	250	100J	5 0 ⊘	S131
6#	21RC30	300	25 △	75B	20m	40m	3 0	5 0m		2 2	16	3 0u	10	25u	20	150	125A	5.0 ⊘	S141c
7#	24TB3	300	25	84B		10	3 0	7 5m		2 3	31					180	125	1 0	S266
8#	26TB3	300	25	84B		10	3 0	7.5m		2 3	31					180	125	1.0	S63a
9	2N2577	300	25	85C		80m$	3 5 $	2.5m⊘	125C	70 §	16					260 §	125C	.50	TO41
10	MCR1907-5	300 △	25	125J	12m	30m	1 5	4 0m	125J	1 7	20	.50u	10	12u⊘	30 §	150	125J	5 †	TO48
11#	BTX82-300R	300	26	87B	10	80	3 5					5.0		50u		550 *	125J	5.0 ⊘	TO48
12#	BTX13/300R	300	30	25§	40m§	50m	3 0			3 5 §	250	4.0u§	10	6.0u§	20 §	300	125J	5 0	S189
13#	23TB3	300	31	82B	150m	100m	3 0	7 5m		2 4	63					260	125C	1 0	S266
14#	25TB3	300	31	82B	150m	100m	3 0	7 5m		2 4	63					260	125C	1 0	S63a
15#	CR25-301B	300	32	25	26m	40m	3 0					2.5u	25	150u		210	125	5 0	TO48
16#	8TW3	300	32	75C$	25m	50m	2 0	10m	100J	1 8 §	90	2 5u§	32	20u§		550	150S	2 0	
17#	BTX66/300R	300	32	85B	10m⊘§	80m	3 0	10m	125J	3 3	500	50u	50	15u	20	680 *	125J	1 †	TO94
18	C40C△	300	35	18B		40m	3 0	5 0m△	25J	2.0 △	50			12u			125J	5 0	TO48
19	SCR163A	300 ⊘	35	25C	50m	25m	2 0	4 0m△	125C	2 0	50	1 0u§	200	20u§		200 §	125J	15	TO48
20	SCRF163A	300 ⊘	35	25C	100m	25m	2 0	4 0m△	125C	2.0	50	20u§	10	6 0u§		200 §	125J	15	TO48
21	SCRF1630	300 ⊘	35	25C	100m	40m	3 0	4 0m△	125C	2.0	50	2 0u§	10	12u§		200 §	125J	15	TO48
22	16RC30A	300 ⊘	35 △	35C	20m⊘	40m	2 0	5 0m⊘	125C	2 3	70 †		10	75u§	25 §	250 △	125J	50 †	TO48
23	16RCF30A	300 ⊘	35 △	35C	20m⊘	40m	2.0	1 0m⊘	125C	2 3	70 †		10	12u§	25 §	250 △	125	50 †	TO48
24	18RC30	300 ⊘	35 △	45C	20m⊘	40m	2 0	5 0m⊘	125C	2 0	70 †					350 △	125J	50 †	TO48
25	MCR3835-5	300	35	47C	50m	40m	1 5			1 2	35	1 0u	35	15u	50 ⊘§	325 §	100J	500m	M94b
26	MCR3935-5	300	35	47C	50m	40m	1 5			1 2	35	1 0u	35	15u	50 ⊘§	325 §	100J	500m	S131k
27	C38C△	300 ⊘	35	56C	80m	40m	3 0	5 0m	25J	2 0 △	50	1.4u	5.0	24u	20	150	150C	12	TO48
28	C40H⊘	300	35	62C	10m⊘	40m	2 5	5 0m⊘	125J	2 0 †	50	1 4u	5.0	8 0u	200 §	150	125J	.50 †	TO48
29	NL570C	300	35	62	100m	80m	3 0			1 7	50	1 4u	5 0	30u	200	600	125	500m	
30	22RC30	300 ⊘	35 △	70C	20m⊘	40m	2 0	5 0m⊘	150C	2 3	70 †				20	225 △	150J	500m†	TO48
31#	TK3FA	300	35	85C		300m	3 0	10m	125J	2 0	100	3 0u§	100	20u§	100 §	700		900m	S317
32#	TK3FB	300	35	85C		300m	3 0	10m	125J	2.0	100	3 0u§	100	40u§	100 §	700		900m	S317
33	C38C⊘	300	35	87C	80	40m	2 5	5.0m	150J	2 0 †	50		5 0	24u§	20	200	150J	500m†	TO48
34	NLC38C	300	35	90C	80m	40m	2 5	5 0m	150J	2.0	50	1 4u	5 0	24u	20	200	150J	.50 †	TO48
35▼#	5TCA30	300	35	125	60	100m	3 0							100u	100 §	1.5k	125	10	
36	35C30	300	35	125J	200m§	200m	3 0	10m	125J	2 5	220	10u	35	40u§		900	125J	15 ⊘	TO94#△
37	35C30B	300	35	125J	200m§	200m	3 0	10m	125J	2 5	220	10u	35	40u§	100	900	125J	15 ⊘	TO94#△
38	35C30BF	300	35	125J	200m§	200m	3 0	10m	125J	2.5	220	10u	35	40u§	100	900	125J	15 ⊘	TO83#△
39	35C30F	300	35	125J	200m§	200m	3 0	10m	125J	2 5	220	10u	35	40u§		900	125J	15 ⊘	TO83#△
40#	CR30-303A	300	36	25	66m	60m	3 0			1 4	30	20u	30	73u		500	125	5 0	TO49
41#	CR30-304A	300	36	25	66m	60m	3 0			1 4	30		30	20u		500	125	5 0	TO49
42#	CR30-404AA	300	38	70C	20m⊘	80m	3 0	10m†	125C	2.5	100	20u	100	20u⊘	20	660	125	5 0 ⊘	TO49
43#	CR30-404BA	300	38	70C	20m⊘	80m	3 0	10m†	125C	2 5	100	20u	100	15u⊘	20	660	125	5.0 ⊘	TO49
44#	CR30-404CA	300	38	70C	20m⊘	80m	3 0	10m†	125C	2 5	100	20u	100	12u⊘	20	660	125	5 0 ⊘	TO49
45#	CR30-404DA	300	38	70C	20m⊘	80m	3 0	10m†	125C	2 5	100	20u	100	8.0u⊘	20	660	125	5 0 ⊘	TO49
46▼#	6TC30	300	40			100m	3 0			1 3		10u		150u	50 §⊘	1.5k*	125J		S183a
47#	ATS30	300	40	25		100m	2 0												
48#	BStD0320	300	40	51C	120m	50m	3 0	10m	125J					12u§	50 §	300	125J		
49#	2SF733	300	40	70B		40m	3 0	7 0m	125J	1 7	50				100	300	125J	500m	S18c
50#	BStF0420	300	40	70C		100m	2 0	5 0m	110J					20u§	50 §	360	110J		S18f
51#	27TB3	300	40	74B		10	3.0	15m		2 1	78					450	125C	1.0	S63a
52#	BStF0520	300	40	78C		100m	2.0	5 0m	120J					150u§	50 §	320	120J		S18f
53#	CR24-403RB	300	40	80C	28m⊘	40m	3 0	5 0m†	125C	1 4	50	2 3u	20	85u	20	320	125	5 0	
54#	CR24-403RBA	300	40	80C	28m⊘	40m	3 0	5 0m†	125C	1 4	50	2 3u	20	85u	200	320	125	5.0	
55#	T30F300C	300	40	85C	300m	100m	3 0	10m	125J	1 8	100	2 0u⊘	25	25u§	50 §	800 §	125J		S63g%
56#	T30F300E	300	40	85C	300m	100m	3 0	10m	125J	1 8	100	2.0u⊘	25	25u§	50 §	800 §	125J		M351%
57♦	40RCS30	300 ⊘	40	87C	200m	110m	3 0	2 5m	105J	1 7 †	40	4 5u	10		25 §	1.0k§	105J	500m†	S363
58▼#	6TCA30	300	40	125	60	100m	3 0							100u	100 §	1 5k	125	10	
59	251F	300	40	125J		100m	3 0	15m	125J	1 7	50	4 0u	50	100u	300	1 2k*	125J	3 †	Z59
60	NLE45C	300	45	89C	10	70m	2 5	8 0m	125J	3 0	500	5 0u	50	30u	200	1 2k	125J	50 †	TO83
61#	28TB3	300	47	73B		10	3 0	15m		1 9	95					550	125	1.0	S63a
62#	2SF1127	300	50	65		100m	3 0	10m	125J	2 3	300		30	30	100	700	125J	500m	S331
63#	BTY95/300R	300	50	75B	10m⊘§	80m	3 0	10m	125J	3 3	500	3 0u	50	20u	10	680	125J	5 0	TO49
64#	CR50-03	300	50	75C	60m	100m	3 0	15m	100J	1.7	160	4 5u	50	25u		650	100	5 0	S284
65	C145C	300	55 △			100m	3 0										125A		S236
66	C146C	300	55 △			100m	3 0							40u⊘			125A		S236
67	C147C	300	55 △			100m	3.0							10u⊘			125A		S236
68#	TK3	300	55	60C	100m	125m	3 0	10m		2 0	100	5.0u	50	30u	20 ⊘	700	100C	50	TO49
69#	2SF116	300 ⊘	55	68B		100m	3 5	20m	100J	2 7	500					700	100J	.50	S189d
70#	2SF773	300	55	68B		100m	3 5	20m	100J	2 7	500		30	30u	20	700	100	50	S189d
71#	2SF773A	300	55	68B		100m	3 5	20m	100J	2.7	500		30	15u	20	700	100	50	S189d
72#	29TB3	300	55	68B		10	3 0	15m		1 8	110					650	125	1 0	S63a
73#	2SF803	300	55	80C		125m	3 0	25m	125J	1 4	1 0k		300	60u	20	7 0k	125J	2 †	S280
74	NL576C	300	55	82	500m	150m	3 0			2 4	110				50	700	125	2 0	
75	NL577C	300	55	82C	50	15	3 0	6 0m	125J	2 4	110				200	700	125J	2.0 †	TO103
76	C45C△	300	55 △	85C	100m	75m	3 0	10m	120C	3 1 △	500	5 0u	50	30u§	20 §	700	125J	500m	S315
77	C46C△	300	55 △	85C	100m	75m	3 0	10m	120C	3 1 △	500	5 0u	50	30u§	20 §	700	125J	500m	TO94
78	C45H⊘	300	55	89C	100m	70m	3 0	8 0m	125J	3 0 †	500	5 0u	50	30u§	200 §	1.2k	125J	50 †	TO83
79	C46H⊘	300	55	89C	100m	70m	3 0	8 0m	125J	3 0 †	500	5.0u	50	30u§	200 §	1 2k	125J	50 †	TO49
80	NL555H	300	55	89C	300m	150m	2 5	10m	125J	3.5 †	500	8 0u	50	100u§	200 §	1 2k	125J	2 †	TO49
81	NL556H	300	55	89C	300m	150m	2 5	10m	125J	3 5 †	500	8 0u	50	100u§	200 §	1 2k	125J	2 †	TO83
82	2191F	300	55	94C		200m	3 0	10m	125J	2.0 §	50	3 5u	50	15u	100	1 2k*	125J	3 †	Z59
83	2192F	300	55	94C		200m	3 0	10m	125J	2 0 §	50	8 0u	50	20u	100	1 2k*	125J	3 †	Z59
84	555C	300	55	99C		150m	3 0								200		125J		TO49
85	556C	300	55	99C		150m	3 0								200		125J		TO83
86#	5TC30	300	55	125	20m	45m	3 0			1.3	50	5.0u	50	25u		500	100J	20	S185
87▼#	BStG0320	300	60	40A	180m$	300m$	2 0	10m	105J	1 6 $	29	5 0u	38	40u	200	545	105J	2.0	S189C#
88#	BTX67/300R	300	62	85B	10m⊘			10m	125J	2.5	500	50u	50	15u	20	900	125J	1 †	TO94
89#	T50F300	300	62 5	85C	300m	100m	3 0	20m	125J	2 2	160	2 0u⊘	25	30u§	50 §	800 §	125J		M330b%
90	2515F	300	63	120C		.10	3 0	15m	150J	1.7	50				300	1 2k	150J		TO83
91#	CR50-303A	300	64	25	73m	100m	3 0									600	125	5.0	TO49
92#	CR50-304A	300	64	25	73m	100m	3 0					5.5u	50	20u		600	125	5.0	TO49
93▼#	BStG0220	300	65	40A	180m$	300m$	2 0	10m	105J	1.3 $	40	5.0u	42	150u	200	690	105J	2 0	S189C#
94#	CR50-404AA	300	66	75C	32m⊘	60m	3 0	10m†	125C	1.7	150	5.5u	150	20u⊘	20	760	125	5 0 ⊘	TO49
95#	CR50-404BA	300	66	75C	32m⊘	60m	3 0	10m†	125C	1.7	150	5.5u	150	15u⊘	20	760	125	5.0 ⊘	TO49
96#	CR50-404CA	300	66	75C	32m⊘	60m	3 0	10m†	125C	1 7	150	5 5	150	12u⊘	20	760	125	5 0 ⊘	TO49
97#	CR50-404DA	300	66	75C	32m⊘	60m	3 0	10m†	125C	1 7	150	5.5	150	8 0u⊘	20	760	125	5 0 ⊘	TO49
98#	CR50-404LA	300	66	75C	32m⊘	60m	3 0	10m†	125C	1 7	150	5 5u	150	25u⊘	20	760	125	5 0 ⊘	TO49
99	2N1915	300	70 △	62C		130m$	3 0 $	5 0m⊘	62C	1.9 †	70					1.0k*	125C	.50	TO49
100	2N1796	300	70 △	65C		130m$	3 0 $	5 5m⊘	65C	1 8 †	70					1.0k*	125C	50 †	TO83
101#	CR70B6	300	70	74C		70m	3 0	6.0m	125J	1 7	220				10 △	1.5k△	125J	5 0 ⊘	S189d
102#	36TB3	300	70	75B		15	3 0	15m		2.0	140					760	125	1 0	S63d
103#	CR70CX6	300	70	83C		100m	3 0	15m	125J	1 8 †	220			30 §	100 §	1.5k	125J	5 0 ⊘	S237f
104#	CR70CY6	300	70	83C		100m	3 0	15m	125J	1.8 †	220			15 §	100 §	1.5k	125J	5 0 ⊘	S237f
105	2N2029	300	70 △	85C		150m$	3 0 $	5 0m⊘	85C	1 9 †	70					1 0k*	150C	500m	TO49
106#	BTY99/300R	300	70	85B	10m⊘§	70m	3 0	10m	125J	2 5	500	3 0u	50	20u	10	900	125J	5 0	TO49
107#	TK130FA	300	70	85C		300m	3 0	10m	125J	2 0	200	3 0u§	100	20u§	100 §	1 0k		900m	S317
108#	TK130FB	300	70	85C		300m	3 0	10m	125J	2 0	200	3 0u§	100	40u§	100 §	1 0k		900m	S317
109▼#	10TCA30	300	70	125	100	100m	3 0							100u	100 §	1 5k	125	10	
110	70C30	300	70	125J	200m§	200m	3 0	10m	125J	1 8	220	10u	70	40u§		1 6k	125J	15 ⊘	TO94#△

SYMBOLS AND CODES EXPLAINED IN INTERPRETER

6. SILICON CONTROLLED RECTIFIERS

IN ORDER OF (1) PEAK REV. VOLT., (2) MAX. CONT. CUR., (3) TEMPERATURE, (4) TYPE No.

LINE No	4 TYPE No	1 PRV and VBO (V)	MAX. CONT. CURRENT 2 Idc (A)	3 at TEMP (°C)	MAX. HOLD. CUR Ih @ 25°C (A)	MAX. GATE FIRING SPEC at 25°C Igf (A)	Vgf (V)	MAX SAT I Ir@PRV and Is@VBO (A)	at TEMP (°C)	MAX. FWD. VOLT. DROP at 25°C Vf (V)	@ If (A)	SWITCHING TIME at 25°C Ton (s)	for If (A)	Toff (s)	MIN. dV/dt @ 25°C (V/us)	ABS. MAX. RATINGS 1Cy PK SURGE I@25°C (A)	MAX TEMP (°C)	MAX GATE POWER (W)	DWG. No.
1	70C30B	300	70	125J	200m§	150m	3 0	10m	125J	1 8	220	10u	70	40u§	100	1.6k	125J	15 Ø	T094#△
2	70C30BF	300	70	125J	200m§	150m	3 0	10m	125J	1 8	220	10u	70	40u§	100	1.6k	125J	15 Ø	T094#△
3	70C30F	300	70	125J	200m§	200m	3 0	10m	125J	1.8	220	10u	70	40u§		1.6k	125J	15 Ø	T083#△
4#	SH50F11	300	79	85C	150m	100m	3 0	8 0m	125J	1 7 §	150	6.0u	50	20u§	100	1.0k	125J	50 †	S189f
5▼#	12TC30	300	80		100m	100m	3 0			1.5		10u		150u	50 §	1.5k*	125J		S183b
6#	CR31-403A	300	80	55C	38mØ	60m	3 0	10m†	125C	1.7	100	3.7u	100	130u	20	700	135J	5.0 Ø	T049
7#	CR31-404AA	300	80	55C	38mØ	60m	3 0	10m†	125C	1.7	100	5.7u	100	20u⊘	20	700	135J	5 0 Ø	T049
8#	CR31-404BA	300	80	55C	38mØ	60m	3 0	10m†	125C	1.7	100	5 7	100	15u⊘	20	700	135J	5 0 Ø	T049
9#	CR31-404CA	300	80	55C	38mØ	60m	3 0	10m†	125C	1.7	100	5 7	100	12u⊘	20	700	135J	5.0 Ø	T049
10#	CR31-404DA	300	80	55C	38mØ	60m	3 0	10m†	125C	1.7	100	5.7u	100	8.0u⊘	20	700	135J	5 0 Ø	T049
11	TCR3050	300	80	70C	25mØ	50m	3 0	4.0mØ	100C	.75 Ø	50 §	4 5u		18u		1 0k	125C	1.0	S147
12	36RC30A	300 ⊘	80 △	75C	20 Ø	700m	2 5	5.0mØ	125C	2.2 †	160					850 △	125J	2.0 †	T094
13	36RCF30A	300 ⊘	80 △	75C	20 Ø	700m	2.5	5 0m	125C	2.2 †	160		50	20 §		850 △	125J	2 0 †	T094
14	37RC30A	300 ⊘	80 △	75C	20 Ø	700m	2 5	5 0mØ	125C	2.2 †	160					850 △	125J	2.0 †	T083
15	37RCF30A	300 ⊘	80 △	75C	20 Ø	700m	2 5	5.0m	125C	2.2 †	160			20 §		850 △	125J	2.0 †	T083
16	51RCG30	300 ⊘	80 △	75C	100m	150m	2 5	15mØ	125C	2.5 †	160			20u	100 §	1 2k△	125J	3 0 †	T094
17	52RCG30	300 ⊘	80 △	75C	100m	150m	2 5	15mØ	125C	2.5 †	160			20u	100 §	1 2k△	125J	3.0 †	T083
18#	CR80-03	300	80	75C	60m	100m	3 0	15m	100J	1.7	250	4.5u	80	30u		800	100	5.0	S284
19#	2SF126	300 ⊘	80	78B		100m	3 5	20m	125J	2.3	500					1 0k	125J	50	S189d
20#	2SF783	300	80	78B		100m	3 5	20m	125J	2 3	500		50	30u	20	1 0k	125	.50	S189d
21#	2SF783A	300	80	78B		100m	3 5	20m	125J	2.3	500		50	15u	20	1 0k	125	50	S189d
22#	51RC30	300	80 △	84B	50m	70m	2 5	5 0		2 2	50	4 5u	50	60u	20	700	125A	5.0 Ø	S237c
23▼#	12TCA30	300	80	125	100	100m	3 0							100u	100 §	1 5k	125	10	
24	250F	300	80	125J		100m	3 0	15m	125J	1 3	50	4 0u	50	100u	300	1 6k*	125J	3 †	Z59
25#	37TB3	300	85	66B		15	3 0	15m		1 9	175					930	125	1 0	S63d
26#	CR70-401A	300 †	85	75C		100m	3 0	15m	25C	1.7	70				20	1 0k	125C	1 0	T049
27#	CR70-401C	300	85	75C		100m	3 0	30m†	125C	1.7	210				20	1.0k	125	5 0	M376
28#	TT3FA	300	95	85C		500m	3 0	25m	125J	2 0	350	3.0u§	100	20u§	100 §	2 0k		1 5	S204a
29#	TT3FB	300	95	85C		500m	3 0	25m	125J	2.0	350	3 0u§	100	40u§	100 §	2 0k		1 5	S204a
30#	38TB3	300	100	62B		15	3 0	15m		1.8	205					1 0k	125	1.0	S63d
31#	FT101BX6	300	100	93C		150m	2 0	15m	125J	1.2	100 §		100	30u⊘	100 △	2 0k△	125J	16 Ø	M568a
32	100C30	300	100	125J	200m	200m	2 5	25m	125J	2.0	500	10u	100	40u§		2 0k	125J	10 Ø	T093#△
33	100C30B	300	100	125J	200m	200m	2 5	25m	125J	2 0	500	10u	100	40u§	100	2.0k	125J	10 Ø	T093#△
34#	CR51-403A	300	105	55C	38mØ	60m	3 0	10m†	125C	1 6	150	3 4u	120	185u	20	760	135J	5 0	T049
35	C154C△	300	110 △		500m	500m	4 0	14m	25C	3 0 †	500 †		50	7.0u§	200 §	1.2k	125J	2 0 Ø	T094
36	C155C△	300	110 △		500m	500m	4 0	14m	25C	3.0 †	500 †		50	12u§	100 §	1.2k	125J	2 0 Ø	T094
37	C156C△	300	110 △		500m	500m	4 0	14m	25C	3 0 †	500 †		50	7 0u§	200 §	1.2k	125J	2.0 Ø	S315
38	C157C△	300	110 △		500m	500m	4 0		25C	3.0 †	500 †		50	12u§	100 §	1.2k	125J	2 0 Ø	S315
39#	BStH0420	300	110	46C	180m	100m	2.0	10m	110J					20u§	50 §	1.0k	110J		S189c
40#	BStH0520	300	110	52C	200m	200m	2.0	10m	120J					250u§	50 §	900	120J		S189e
41♦	JAN2N1797	300	110	60C	40m	70m	3 0	15m	125A	1.8	150	15u	50	40u		1.0k	125A	500m	T083
42♦	JAN2N1915	300	110	60C	40m	70m	3 0	15m	125A	1.8	150	15u	50	40u		1.0k	125A	500m	T049
43	2541F	300	110	60C		200m	3 0	10m	125J	1.7 §	50	3 5u	50	15u	100	1 4k*	125J	3.0 †	Z59
44	2542F	300	110	60C		200m	3.0	10m	125J	1.7 §	50	8.0u	50	20u	100	1.4k*	125J	3 0 †	Z59
45	C55C△	300	110 △	60C	100m	75m	3 0	10m	125J	2.5	500	5 0u	50	30u§	20 §	1 0k	125J	5.0	S91
46	C55H⊘	300	110	60C	100m	70m	2 5	8 0m	125J	2.5 †	500	5.0u	5 0	15u§	200 §	1.2k	125J	50 †	T049
47	C56C△	300	110 △	60C	100m	75m	3 0	10m	125J	2 5	500	5.0u	50	30u§	20 §	1.0k	125J	5.0	S108
48	C56H⊘	300	110	60C	100m	70m	2 5	8.0m	125J	2.5 †	500	5.0u	5.0	15u§	200 §	1.2k	125J	50 †	T083
49#	TK130	300	110	60C	100m	125m	3 0	10m		2 0	200	4 5u	50	20u	40 §Ø	1.0k	125C	50	T049
50	71RC30A	300 ⊘	110 △	62C	20mØ	70m	2.5	5 0mØ	125J	1 9 †	220		50	30u§		1.0k△	125J	.5 †	T094
51	71RCF30A	300 ⊘	110 △	62C	20mØ	70m	2 5	5.0mØ	125J	1.9 †	220		50	20u§	25 △	1.0k△	125J	50 †	T094
52	72RC30A	300 ⊘	110 △	62C	20mØ	70m	2 5	5.0mØ	125J	1 9 †	220		50	30u§		1.0k△	125J	.5 †	T083
53	72RCF30A	300 ⊘	110 △	62C	20mØ	70m	2 5	5 0mØ	125J	1.9 †	220		50	20u§	25 △	1.0k△	125J	50 †	T083
54	71RCG30	300 ⊘	110 △	75C	100m	150m	2 5	15mØ	125C	2 4 †	220			15u	100 §	1.4k△	125J	3 0 †	T094
55	72RCG30	300 ⊘	110 △	75C	100m	150m	2 5	15mØ	125C	2.4 †	220			15u	100 §	1.4k△	125J	3.0 †	T083
56#	71RC30	300	110 △	79B	50m	70m	2 5	5 0m		1.9	70	4.5u	50	70u	20	1.0k	125A	5.0 Ø	S237c
57	NLE155C	300	110	83C	50	15	2 5	8 0m	125J	3.0	500	5 0u	50	20u	200	1.4k	125J	2.0 †	T094
58	NLE157C	300	110	83C	50	15	2 5	8.0m	125J	3 0	500	5 0u	50	20u	200	1.4k	125J	2.0 †	T083
59	NLF154C	300	110	83C	500m	200m	2 5	8 0m	125J	3 0 †	500	5 0u	50	10u⊘	200	1.4k	125J	2.0 †	T094
60	NLF155C	300	110	83C	500m	200m	2.5	8.0m	125J	3.0 †	500	5 0u	50	20u⊘	200	1.4k	125J	2.0 †	T094
61	NLF156C	300	110	83C	500m	200m	2 5	8 0m	125J	3 0 †	500	5.0u	50	10u⊘	200	1.4k	125J	2.0 †	T083
62	NLF157C	300	110	83C	500m	200m	2 5	8.0m	125J	3 0 †	500	5.0u	50	20u⊘	200	1 4k	125J	2.0 †	T083
63	71RC30B	300 ⊘	110 △	85C	20mØ	70m	2 5	5 0mØ	150J	2.2 †	220		50	40u§		1.0k△	150J	.5 †	T094
64	72RC30B	300 ⊘	110 △	85C	20mØ	70m	2 5	5.0mØ	150J	2.2 †	220		50	40u§		1 0k△	150J	.5 †	T083
65	JAN2N2029	300	110	87C	40m	130m	3 0	15m	150C	1.6	200	5 0u⊘	70	150u⊘	20 △	1 0k	150A	500m†	S104b
66	C62C△	300	110 △	87C	100m	75m	3 0	15m	145C	2.5 △	1 5k	5 0u	50	50u		1.0k	150J	500m	S315
67	NLE150C	300	110	89C	50	.15	2 5	8.0m	125J	2.6	500	8 0u	50	150u	200	1.6k	125J	2.0 †	T094
68	NLE152C	300	110	89C	50	15	2 5	8 0m	125J	2 6	500	8.0u	50	150u	200	1.6k	125J	2 0 †	T083
69	NLH150C	300	110	89C	50	15	2 5	8 0m	125J	2.6	500	8.0u	50	150u	200	1 6k	125J	2 0 †	T094
70	NLH152C	300	110	89C	50	15	2 5	8 0m	125J	2 6	500	8 0u	50	150u	200	1.6k	125J	2.0 †	T083
71	C60C	300	110	100C	100m	70m	2.5	8.0m	125J	2 5 †	500	5 0u	50	50u§		1.6k	150J	.5 †	T049
72	C62C⊘	300	110	100C	100m	70m	2 5	8.0m	125J	2 5 †	500	5 0u	50	50u§		1 6k	150J	50 †	T083
73	NLC62C	300	110	103C	10	70m	2 5	8.0m	150J	2.5	500	5.0u	50	50u		1.6k	150J	.50 †	T083
74#	10TC30	300	110	125J	20m	60m	3 0			1 5	110	5 0u	110	25u		1 1k	125J	20	S185
75#	T95F300	300	115	85C	300m	100m	3 0	30m	125J	1.8	300	2 5u⊘	50	30u§	50 §	2 0k§	125J		M330a%
76#	2SF345	300	120	25C		100m	3 0	12m	125C	1 2 △	60					1 0k	125	10 Ø	S142
77#	CR120-03	300	120	75C	60m	100m	3 0	15m	125J	2 1	370	4 5u	120	40u		1 0k	125	5 0	S284
78#	CR100-401C	300 △	124	80C		100m	3 0	15m	25C	1 7	100				20	1 2k	125C	1 0	M376
79#	CR100-401D	300	125	80C	30mØ	100m	3 0	30m†	125C	1.7	300			100	20	1 5k	125	5 0	T049
80	2505F	300	125	95C		10	3 0	15m	150J	1 3	50				300	1 6k	150J		T083
81#	SH80F11	300	126	85C	200m	150m	3 0	15m	125	1.7 §	250	6 0u	80	20u	100	1.6k	125J	.50 †	S267b
82#	42TB3	300	135	57B		20	3 0	15m		2 2	265					1 4k	125	1 5	M308
83♦#	30TC30	300	140		150m	100m	3 0			1 5					50 §Ø	3 5k*	125J		S348
84▼#	20TCA30	300	140	125	150	100m	3 0							100u	100 §	3 0k	125	10	
85▼#	BStL2420	300	150	50C	150m	300m	2 0	10m	110J	1.8	450			25u⊘	50 §	2.5k	110	50	
86▼#	BStL2520	300	150	55C	150m	300m	2.0	10m	120J	2.0	450				50 §	2 3k	120	20	
87#	TT3	300	150	60C	300m	500m	3.0	25m	100J	2.2	350	5 0u	15		20 §Ø	2 0k	100C	1 0	S204
88	2N2506	300	150 △	80C	50m	150m$	3 0 $	10m	80C	1.4 †	150					3.5k*	125C	20 †	T093
89	2N2545	300	150	80C	50m§	150m$	3 0 §	7 5m	80C	1.5	150				4 0	3.5k§	125C	2.0 †	T093
90#	CR150BX6	300	150	81C		300m	3 0	15mØ	125J	1.9	500			30u⊘	100 △	4.0k	125J	16 Ø	S237a
91#	CR150BY6	300	150	81C		300m	3 0	15mØ	125J	1 9	500			15u	100 △	4.0k	125J	16 Ø	S237a
92#	FT150BX6	300	150	81C		300m	3 0	15m	125J	1 9	500		150	30u⊘	100 △	4 0k△	125J	16 Ø	M567
93#	FT150BY6	300	150	81C		300m	3 0	15m	125J	1.9	500		150	15u⊘	100 △	4 0k△	125J	16 Ø	M567
94#	TT230FA	300	150	85C		500m	3 0	25m	125J	2.0	450	3.0u§	100	20u§	100 §	3.2k		1.5	S204a
95#	TT230FB	300	150	85C		500m	3 0	25m	125J	2.0	450	3 0u§	100	40u§	100 §	3 2k		1.5	S204a
96#	FT151BX6	300	150	87C		150m	2 0	15m	125J	1.3	150 §		150	30u⊘	100 △	4 0k△	125J	16 Ø	M567
97	150C30	300	150	125J	200m	200m	2 5	25m	125J	1.7	500	10u	150	40u§		3.0k	125J	10 Ø	T093#△
98	150C30B	300	150	125J	200m	200m	2 5	25m	125J	1.7	500	10u	150	40u§	100	3 0k	125J	10 Ø	T093#△
99	101RC30	300 ⊘	160 △	80C	50mØ	150m	2 5	10mØ	125J	1.7 †	314		150	25u§		2.0k△	125J	2 †	T093
100#	43TB3	300	175	62B		20	3 0	15m		2.2	390					1 9k	125	1.5	M308
101▼#	2SF1143	300	175	75C		300m	3 0	15m	125J	1.7 §	500				100 △	4 0k△	125J	16 Ø	S237e
102#	CR150F6	300	175	75C		300m	3 0	15m	125J	1.7 §	500				100 §	4.0k	125J	16 Ø	S237e
103	2N3887	300	175	80	200m	400m	4 0	15m	125	1.8	175					4 5k	125	3.0	T093
104	C350C	300	175	82C	50	15	2 5	8.0m	125J	2.6	500	8.0u	50	100u	200	1 8k	125J	2.0 †	
105	2201F	300	175	125J		300m	4 0	15m	125J	1.3 §	100	4.0u	100	30u	100	4 0k*	125J	3.0 †	T093
106	2202F	300	175	125J		300m	4 0	15m	125J	1.3 §	100	8.0u	100	40u	100	4.0k*	125J	3 0 †	T093
107▼#	BStL0220	300	190	40A	180m$	300m$	2 0	10m	115J	1.3 $	250	5.0u	120	150u	200	2 8k	115J	2 0	S251#
108#	46TB3	300	195	56B		20	3 0	15m		2.0	390					2 1k	125	1.5	M308
109#	2SF313	300 ⊘	200	62B		125m	2 5	30m	125J	2.1	1 0k					3 5k	125J	1.0	S167
110#	2SF793	300	200	62B		125m	3 0	30m	125J	2 1	1 0k		100	40u	20	3.5k	125J	1 0	S167

SYMBOLS AND CODES EXPLAINED IN INTERPRETER

6. SILICON CONTROLLED RECTIFIERS

IN ORDER OF (1) PEAK REV. VOLT., (2) MAX. CONT. CUR., (3) TEMPERATURE, (4) TYPE No.

LINE No	4 TYPE No	1 PRV and VBO (V)	MAX. CONT. CURRENT 2 Idc (A)	3 at TEMP (°C)	MAX. HOLD. CUR Ih @ 25°C (A)	MAX. GATE FIRING SPEC at 25°C Igf (A)	Vgf (V)	MAX SAT I Ir@PRV and Is@VBO (A)	at TEMP (°C)	MAX. FWD. VOLT. DROP at 25°C Vf (V)	@ If (A)	SWITCHING TIME at 25°C Ton (s)	for If (A)	Toff (s)	MIN. dV/dt @ 25°C (V/us)	ABS. MAX. RATINGS 1Cy PK SURGE I@25°C (A)	MAX TEMP (°C)	MAX GATE POWER (W)	DWG. No.
1#	2SF793A	300	200	62B		125m	3 0	30m	125J	2 1	1 0k		100	20u	20	3.5k	125J	1.0	S167
2	261F	300	200	80		15	3 0	15m	125J	1 4	100				300	3 3k	125		T093
3	2181F	300	200	80C		300m	4 0	15m	125J	1 3 §	100	4 0u	100	20u	100	3.3k*	125J	3 †	T093
4	2182F	300	200	80C		300m	4 0	15m	125J	1 3 §	100	8 0u	100	30u	100	3 3k*	125J	3 †	T093
5	263F	300	200	85		15	3 0	15m	125J	1 3	50				300	1 6k	125		M414
6#	TT330	300	200	85C	40mØ	500m	3 0	25m	125J	1.6	600	5 0u§		100u§	100 Ø§	4 0k		1 5	S204a
7	2615F	300	200	105		15	3 0	15m	150J	1 4	100				200	3 3k	150		T093
8▼#	30TCA30	300	200	125	150	100m	3 0								100 §	5.5k	125	10	
9#	47TB3	300	220	50B		.20	3 0	15m		1 9	440					2.4k	125	1.5	M308
10#	CR153-403A	300	220	70C	35mØ	150m	3 5	30m†	125C	1 6	450				100	3 0k	125	5.0	M201
11#	20TC30	300	220	125	50m	100m	3 0			1.5	200	5 0u	200	30u		2 5k	125J	20	S183
12#	CR152-403A	300	230	70C	35mØ	150m	3 5	30m†	125C	1 5	450				100	3.1k	125	5 0	M201
13#	2SF823	300	230	85B		100m	2 5	30m	125J	1.8	1 0k					4 0k	125J	10	S167
14	NLF185C	300	235 △		500m	150m	2 5		125J	2.8	1 5k	8 0u	100	15u	200	3 5k	125J	2.0 †	T093
15	151RC30	300 ⧄	235 △	62C	50mØ	100m	2.5	10mØ	125J	1.7 †	471		150	25u§		3 0kΔ	125J	2 †	T093
16	151RB30	300 ⧄	235 △	75C	500m	150m	2 5	20m	125J	2 2 †	471	2 0u	150	40u§	200 △	2 5kΔ	125J	2 †	T093
17#	SH150F11	300	235	76C	200m	150m	3 0	20m	125	1 5	500	6 0u	150	30u§	50	3 2k	125	3 0 †	S91b
18	151RC30A	300 ⧄	235 △	80C	50mØ	100m	2 5	10mØ	125J	1 4 †	471		150	40u§		3 5kΔ	125J	2 †	T093
19▼	151RF30	300 ⧄	235	80C	200m	200m	2 5	15m	125C	1.9 †	471		250	20u§	200 §	4 2kΔ	125J	3 0 †	T093
20	C180CΔ	300	235 △	80C	500m	150m	3.0	10m	25	2.9 †	1 5k	8 0u	100	30u	200	3 5k	125C	2 0	T093
21	C185CΔ	300	235 △	80C	500m	300m	3.0	10m	25	2.9 †	1 5k	8 0u	100	15u	200	3 5k	125C	2.0	T093
22	NLF180C	300	235 △	80C	500m	150m	2 5	6.0m	125J	2.8	1 5k	8.0u	100	80u	200	3 5k	125J	2 0 †	T093
23#	TT230	300	235	80C	250m	500m	3 0	25m	125J	1 7	450	5 0u	15	20u	100 §Ø	3.2k	125C	1 0	S204
24	151RA30	300 ⧄	235 △	85C	500m	150m	2.5	20m	125J	1.8 †	471	2 0u	150	60u§	200 △	3 5kΔ	125J	2 †	T093
25#	CR151-403A	300	240	70C	35mØ	150m	3 5	30m†	125C	1.4	450				100	3 3k	125	5.0	M201
26#	CR250GX6	300	250	50C		350m	4.0	15m	125J	1 9	780 §		250	30u⧄	100 △	5 0kΔ	125J	16 Ø	M569
27#	CR250GY6	300	250	50C		350m	4 0	15m	125J	1.9	780 §		250	15u⧄	100 △	5 0kΔ	125J	16 Ø	M569
28#	FT250BX6	300	250	52C		350m	4 0	15m	125J	1 9	780 §		250	30u⧄	100	5 0kΔ	125J	16 Ø	M567
29#	FT250BY6	300	250	52C		350m	4.0	15m	125J	1.9	780 §		250	15u⧄	100 △	5.0kΔ	125J	16 Ø	M567
30#	CR250AX6	300	250	61C	30m	350m	4 0	15m	125J	1.9	780 §		250	30u⧄	100 △	5.0kΔ	125J	16 Ø	S158b
31#	CR250AY6	300	250	61C	30m	350m	4 0	15m	125J	1 9	780 §		250	30u⧄	100 △	5.0kΔ	125J	16 Ø	S158b
32#	FT251BX6	300	250	62C		150m	2 0	15m	125J	1 2	250 §		250	30u⧄	100 △	5.0kΔ	125J	16 Ø	M567
33#	CR250F6	300	250	65C		350m	4.0	15m	125J	1.8 §	780				100 §	5.0k	125J	3 0 †	S158e
34	2N3356	300	250	80C	200m§	400m§	4 0 §	15m	125C	2 0 §	250					5 0k§*	125C	3 0 †	T0108
35▼#	TY180NP3K2	300	260	70B	50m	200m	3 5	28m	125J	1 0	600	10u⧄	500	20n⧄	20 §	4.3k	125J	1.5 †	S375
36▼#	TY180QP3K2	300	260	70B	50m	200m	3 5	28m	125J	1.6	600	10u⧄	500	30u⧄	20 §	4 3k	125J	1 5 †	S375
37#	61TB3	300	275	67B		30	3 0	40m		2 4	665					3.2	125	2 0	M308a
38	260F	300	275	80		15	3 0	15m	125J	1 2					300	3.3k	125		T093
39	2605F	300	275	105		15	3 0	15m	150J	1 2	100				300	5.0k	125		T093
40♦#	40TC30	300	300		150m	100m	3 0			1 5					50 §Ø	4.5k*	125J		S348
41#	CR300AW6	300	300	11A	30mØ	350m	4 0	15m	125J	1 9 §	780			50 §	100 §	5 0k	125J	16 Ø	S300
42#	CR300AX6	300	300	11A	30mØ	350m	4 0	15m	125J	1 9 §	780			30 §	100 §	5.0k	125J	16 Ø	S300
43#	CR300AY6	300	300	11A	30mØ	350m	4 0	15m	125J	1 9 §	780			15 §	100 §	5 0k	125J	16 Ø	S300
44#	CR300F6	300	300	15A		350m	4 0	15m	125J	1 8 §	780				100 §	5 0k	125J	16 Ø	S300
45	273F	300	300	70		.15	3 0	15m	125J	1 3	100				300	3 3k	125		M414
46#	FT300C6	300	300	73C		350m	4.0	30m	150J	1 7	950 §				50 △	5 0kΔ	150J	16 Ø	M567
47#	FT301AX6	300	300	74C		150m	2 0	15m	125J	1 2	300 §		300	30u⧄	100 △	6 0kΔ	125J	16 Ø	M567a
48▼#	FT300A6	300	300	81C		200m	3 0	30m	125J	1.6	940 §				200 △	6 0kΔ	125J	16 Ø	M567a
49▼#	40TCA30	300	300	125	150	100m	3 0								100 §	5 5k	125	10	
50	2231F	300	300	125J		300m	4 0	15m	125J	1 3 §	100	4 0u	100	30u	100	4 5k*	125J	3.0 †	M247
51	2232F	300	300	125J		300m	4 0	15m	125J	1 3 §	100	8 0u	100	40u	100	4 5k*	125J	3.0 †	M247
52	2248F	300	300	125J		300m	4 0	10m	125J	1 0 §	100	5 0u	150	50u	100	5 0k*	125J	3 0 †	M308c
53▼#	BStN0220	300	315	40A	180m$	300m$	2 0	10m	115J	1 4 $	520	5 0u	200	150u	200	6 9k	115J	2.0	S251A#
54#	62TB3	300	315	65B		30	3 0	40m		2 2	665					3 7k	125	2 0	M308a
55#	CR253-403A	300	320	40C	35mØ	150m	3 5	30m†	125C	1 6	450				100	3 5k	125	5 0 Ø	M201
56#	CR252-403A	300	336	50C	35mØ	150m	3 5	30m†	125C	1 5	450				100	3 6k	125	5.0	M201
57▼#	BStN1520	300	350	64C	150m	300m	2 0	15m	125J	1.9	1 0k				200 §	5 1k	125	20	
58#	70TB3	300	355	67B		30	3 0	40m		2.2	850					4 1	125	2 0	M308a
59	C380C	300	380	65C	500m	150m	3 0 §	10m	25C	2 8	1.5k	8 0u	100	100u	200	3 5k	120	2 0	M514
60	NLF380C	300	380	67	500m	150m	2 5	10m	25	2.8	1 5k	8 0u	100	100u	200	3 5k	125	2 0	
61	NLF385C	300	380	67	500m	150m	2.5	10m	25	2 8	1 5k	8 0u	100	20u	200	3 5k	125	2 0	
62	2N3533	300	400	20A	200m§	400m	4 0	15m	125J	1 9	250					5 0k	125J	16	M247
63#	71TB3	300	400	65B		30	3 0	40m		2.0	850					4 6k	125	2 0	M308a
64#	FT500AY6	300	400	75C		350m	4 0	3 0m	125J	2 2	1 2k§		400	15u⧄	200 △	7 0kΔ	125J	16 Ø	M406
65#	2SF803A	300	400	80C		125m	3 0	25m	125J	1 4	1 0k		300	30u	20	7 0k	125J	2 †	S280
66#	251RC30	300	400 △	85B	40m	15	2 5	8 0m		1 5	250	6 0u	50	100u	4 0	4 8k	125A	10 Ø	S158d
67#	73TB3	300	430	64B		30	3 0	40m		2 0	1 0k					5 1k	125	2 0	M308a
68#	CR7K403A45	300	435	65C	55mØ	150m	3 5	50m	125J	1 8	1 0k	3.5u	600	180u	100	6 0k	125J	5 0 Ø	M308b
69#	BStN2320	300	440	33C	180m	300m	2 0	10m	115J					40u§	20 §	4 7k	115J		S301
70#	BStN2520	300	440	41C	180m	300m	2 0	10m	120J					250u§	50 §	5.1k	120J		S301
71#	CR7K403A4	300	460	65C	55mØ	150m	3 5	50m	125J	1 7	1 0k	3 5u	600	180u	100	6 4k	125J	5 0 Ø	M308b
72	276F	300	470			15	3 0	15m	125J	1 2	100				300	5 5k	125		M247
73	C291CΔ	300	470 △			150m	3 5										125A		S247a
74#	74TB3	300	470	63B		300m	3.0	40m		1.8	1 0k					5 6k	125	2 0	M308a
75	6RW71FY	300	470	65C		250m	3 1	10mØ	125J	65 Ø	300				4 0	5 5k§	125	16	S132
76♦	C290C	300	470	65C	100m	150m	3 5			1.2	500	10u	5 0	250u§	100 §	5.5k	125J	3 0	S132
77#	SH300F11	300	470	65C	300m	260m	3 5	20m	125J	1 6	100	6.0u	300	30u§	50	5.0k	125J	3.0 †	S267a
78	C291C⧄	300	470	66C	100m	150m	3 0	15m	125J	1 2 †	500	5 0u	5 0	100u§	100 §	5 5k	125J	3 0 †	M331a
79	NLC295C	300	470	67	100m	150m	3 0	15m	125	1 2	500	5 0u	5.0	20u	100	5.5k	125	3 0	
80	NLC297C	300	470	67	100m	150m	3 0	15m	125	1 2	500	5 0u	5 0	20u	100	5.5k	125	3.0	
81	NLF290C	300	470	67	100m	150m	3 0	15m	125	1.2	500	5.0u	5 0	100u	100	5 5k	125	3 0	
82	NLF295C	300	470	67	100m	150m	3 0	15m	125	1 2	500	5 0u	5 0	20u	100	5 5k	125	3 0	
83	NLF297C	300	470	67	100m	150m	3 0	15m	125	1 2	500	5 0u	5 0	20u	100	5 5k	125	3 0	
84	272F	300	470	71		15m	3 0	15m	125J	1.2	100				300	5.5k	125		M414
85#	301RC30	300	470 △	85B	40m	15	2.5	8 0m		1 4	300	6 0u	50	100u	4 0	5 5k	125A	10 Ø	S158d
86	NLF291C	300	470 △	125J	100m	150m	2.5	15m	125J	1 2	500	5 0u	100	100u§	100 §	5 5kΔ	125J	2.0 †	M436
87#	CR7K403A35	300	480	65C	140m	150m	3.5	50m	125J	1 6	1 0k	3 5u	600	180u	100	6 9k	125J	5.0 Ø	M308b
88#	80TB3	300	510	59B		30	3 0	40m		1 5	1.2k					6 4k	125	2.0	M308a
89#	CR7K403A3	300	520	55C	140m	150m	3.5			1 5	1 0k					7 0k*§	125J	5 Ø	M308b
90▼	NLC501C	300	550	25	250m	150m	6 5 §			1 5	1 0k			200u§	100 §	7 0k	125J	5 0 †	M593
91#	81TB3	300	550	56B		30	3 0	40m		1 7	1.2k					7 0k	125	2.0	M308a
92	270F	300	550	67		15	3 0	15m	125J	1 2	500				300	6 5k	125		S295
93#	84TB3	300	595	58B		30	3 0	40m		1.6	1 6k					8 6k	125	2 0	M428
94#	CR9K403A25	300	600	65C	55mØ	150m	3 5	50m	125J	1.3	1 0k	3 5u	600	180u	100	900	125J	5.0 Ø	M308b
95#	FT600A6	300	600	72C		350m	4 0	20m	125J	1.6	1 9k§				200 △	10kΔ	125J	16 Ø	M481
96#	91TB3	300	620	58B		30	3 0	40m		1.4	1 6k					8 6k	125	2.0	M428
97	C507C	300	625 △	125J	100m	150m	4 0	50m	125C	1.4	500	5 0u	25	100u⧄	100	6 5k	125J	26	M464
98	C508C	300	625 △	125J	100m	150m	4 0	50m	125C	1 3	500	5 0u	25	60u⧄	100	9 0k	125J	26	M464
99#	CR9K403A2	300	680	65C	55mØ	150m	3 5	50m	125J	1.1	1 0k	3 5u	600	180u	100	11k	125J	5 0 Ø	M308b
100#	94TB3	300	700	55B		30	3 0	40m		1 2	1 6k					8 6k	125	2.0	M428
101▼#	FT800C6	300	800	63C		200m	3 0	30m	125J	1 6 §	2 5k				200 △	14kΔ	125J	16 Ø	M566
102	C530C	300	980 △	125J	250m	150m	4 0	25m	125J	1 2	1 1k	4 0u	25	150u⧄	100	10k	125J	26	M464
103#	BStP0320	300	1 0k	34C	180m	300m	2 0	20m	110J					40u§	20 §	9.5k	110J		M482
104#	BStP0520	300	1 0k	39C	300m	300m	2 0	20m	115J					250u§	50 §	10k	115J		M482
105	C520C	300	1 1kΔ	150J	250m	150m	4 0	25m	125C	1 2	1 1k	4 0u	25	150u⧄	100	10k	150J	26	M464
106#	CS11L	330	75	40C	12m	7 0m	25	80m		2 2	2 4					20	100	05	TO5
107#	CRS1/30AF	330	1 25	65C	20m	10m	3 0	1 0mΔ	125J	1 2	1 5	2 0u	1 0	15u	15	20	125J	1.0	TO5
108#	CRS3/30AF	330	4 5	90B	25m	20m	3 0	1 0mΔ	125J	1 3	4 5	2.0u	3 0	17u	15	55	125J	2 0	S62
109#	40T4	330	65	75B	200m	200m	25	10m†		2 1 †	200					1 1k	125B	1 0	M308
110	RTD0135	350	1 0	80C	5 0m	20m	1 0	10m	100	1 5	1 0	20u	1.0		100	15	100C		TO5

SYMBOLS AND CODES EXPLAINED IN INTERPRETER

6. SILICON CONTROLLED RECTIFIERS

IN ORDER OF (1) PEAK REV. VOLT., (2) MAX. CONT. CUR., (3) TEMPERATURE, (4) TYPE No.

LINE No	4 TYPE No	1 PRV and VBO (V)	MAX. CONT. CURRENT 2 Idc (A)	3 at TEMP (°C)	MAX. HOLD. CUR Ih @ 25°C (A)	MAX. GATE FIRING SPEC at 25°C Igf (A)	Vgf (V)	MAX SAT I Ir@PRV and Is@VBO (A)	at TEMP (°C)	MAX FWD VOLT DROP at 25°C Vf (V)	@ If (A)	SWITCHING TIME at 25°C Ton (s)	for If (A)	Toff (s)	MIN. dV/dt @ 25°C (V/us)	ABS. MAX. RATINGS 1Cy PK SURGE I@25°C (A)	MAX TEMP (°C)	MAX GATE POWER (W)	DWG. No.
1	RTD0235	350	1 0	80C	10m	1 0m	1 0	1 0m	125	2 5	1 0	20u	1 0		100	15	125C		TO5
2	RTD0335	350	1 0	80C	10m	20m	1.0	50m	125	1 5	1.0	20u	1 0		100	15	125C		TO5
3	RTD0435	350	1.0	80C	5 0m	10m	80	10m	125	1 4	1 0	20u	1 0		100	15	125C		TO5
4	RTD0535	350	1 0	80C	3 0m	02m	80	02m	125	1 4	1 0	20u	1 0		100	15	125C		TO5
5	RTF0135	350	1 0	80C	5 0m	20m	1.0	10m	100	1 5	1 0	20u	1 0		100	15	100C		TO5
6	RTF0235	350	1.0	80C	10m	1 0m	1 0	1 0m	125	2 5	1 0	20u	1 0		100	15	100C		TO5
7	RTF0335	350	1 0	80C	10m	20m	1 0	.50m	125	1.5	1 0	20u	1 0		100	15	125C		TO5
8	RTF0435	350	1 0	80C	5 0m	10m	80	10m	125	1 4	1 0	20u	1 0		100	15	125C		TO5
9	RTF0535	350	1 0	80C	3 0m	02m	.80	02m	125	1.3	1 0	20u	1.0		100	15	125C		TO5
10#	BTX18-300	350	1 6	100C	5.0m	5.0m	2 0	275u	125J	1 5	1 0		30	60u	25	10 *	125	50m†	TO5
11	SCRFL35	350 ⧄	1 7	80C	50m	15m	2 0	90m	125C	1 2 △	1 0	2.0u§	1 0	12u§		60 §	125C	5 0	A130
12	SCRL35	350 ⧄	1 7	80C	20m	15m	2 0	90m△	125C	1.2 △	1 0	1.3u§	1.0	15u§		60 §	125C	5.0	A130
13	SCR335	350 ⧄	4 0	80C	25m	10m	2.0	1 0m△	125C	2.0 △	3 0	1 3u§	1 0	15u§		60 §	150J	5.0	S62
14#	2SF267	350	5 0	73C	10mØ	30m	2 5	3 0mØ	100J	1.3	5 0					90	100J	5 Ø	S141b
15	SCR535	350 ⧄	7 0	60C	25m	15m	2.0	1 0m	125C	1.9 △	15	1.0u§	10	15u§		100 §	125J	10	S121
16	SCRF535	350 ⧄	7.0	60C	50m	25m	2.0	1.0m	125C	1.9 △	15	2 0u§	10	12u§		100 §	125J	10	S121
17	SCR535A	350 ⧄	7 0	110C	25m	15m	2 0	1.0m△	150C	1.9 △	15	1 0u§	10	15u§		100 §	150J	10	S121
18#	2SF277	350	10	63C	10mØ	30m	2 5	3 0mØ	100J	1.2	10					90	100J	5 Ø	S141b
19#	2SF277A	350	10	63C	10mØ	30m	2.5	3.0mØ	100J	1.2	10		10	15u⧄	100 △	90	100J	5 0 Ø	S141b
20	SCR835	350 ⧄	16	25C	100m	75m	3 5	6.0m△	100C	3.0	50	3.0u§	10	30u§		150 §	100J	15	TO48
21	16C35	350	16	125J	50m	15m	2 0	10m	125J	2.0	50	7.0u	16	75u§		150	125J	5 0 Ø	TO48#△
22	16C35B	350	16	125J	50m	40m	2 0	10m	125J	2 0	50	7 0u	16	75u§	25	150	125J	5.0 Ø	TO48#△
23	16C35C	350	16	125J	50m	40m	2 0	10m	125J	2 0	50	7 0u	16	75u§		150	125J	5 0 Ø	TO48#△
24#	2SF297	350	20	58C	10mØ	50m	3.5	3.0mØ	100	1.3	20					300	100J	5 Ø	S106b
25#	2SF297A	350	20	58C	10mØ	50m	3 5	3.0mØ	100	1.3	20		20	15u⧄	100 △	300	100	5 0 Ø	S106b
26	TCR352	350	22	25C	25mØ§	50m	3.0	3 0mØ	100C	820mØ	20 §	7.5u		12u		150	125C	500m	S148
27	SCR1635	350 ⧄	35	25C	50m	40m	3 0	4.0m△	125C	2 0	50	1 5u§	10	20u§		200 §	125J	15	TO48
28	SCR1635A	350 ⧄	35	25C	50m	40m	3.0	4.0m△	125C	2 0	50	1 5u§	10	20u§		250 §	125J	15	TO48
29	SCRF1635	350 ⧄	35	25C	100m	40m	3 0	4 0m△	125C	2 0	50	2.0u§	10	12u§		200 §	125J	15	TO48
30	35C35	350	35	125J	200m§	200m	3.0	10m	125J	2 5	220	10u	35	40u§		900 §	125J	15 Ø	TO94#△
31	35C35B	350	35	125J	200m§	200m	3 0	10m	125J	2 5	220	10u	35	40u§	100	900 §	125J	15 Ø	TO94#△
32	35C35BF	350	35	125J	200m§	200m	3 0	10m	125J	2.5	220	10u	35	40u§	100	900 §	125J	15 Ø	TO83#△
33	35C35F	350	35	125J	200m§	200m	3.0	10m	125J	2 5	220	10u	35	40u§		900 §	125J	15 Ø	TO83#△
34#	5TC35	350	55	125	20m	45m	3 0			1.3	50	5 0u	50	25u		500	100J	20	S185
35	70C35	350	70	125J	200m§	200m	3 0	10m	125J	1 8	220	10u	70	40u§		1 6k	125J	15 Ø	TO94#△
36	70C35B	350	70	125J	200m§	150m	3 0	10m	125J	1.8	220	10u	70	40u§	100	1 6k	125J	15 Ø	TO94#△
37	70C35BF	350	70	125J	200m§	150m	3.0	10m	125J	1 8	220	10u	70	40u§	100	1 6k	125J	15 Ø	TO94#△
38	70C35C	350	70	125J	200m§	100m	2 0	10m	125J	1.8	220	10u	70	40u§		1.6k	125J	15 Ø	TO94#△
39	70C35CF	350	70	125J	200m§	100m	2.0	10m	125J	1 8	220	10u	70	40u§		1.6k	125J	15 Ø	TO83#△
40	70C35F	350	70	125J	200m§	200m	3 0	10m	125J	1.8	220	10u	70	40u§		1.6k	125J	15 Ø	TO83#△
41	TCR3550	350	80	70C	25mØ	50m	3.0	4 0mØ	100C	75 Ø	50 §	4.5u		18u		1 0k	125C	1 0	S147
42#	10TC35	350	100			15m	3.0										150		
43	100C35	350	100	125J	200m§	200m	2 5	25m	125J	2.0	500	10u	100	40u§		2.0k	125J	10 Ø	TO93#△
44	100C35B	350	100	125J	200m§	200m	2 5	25m	125J	2 0	500	10u	100	40u§	100	2 0k	125J	10 Ø	TO93#△
45	150C35	350	150	125J	200m§	200m	2 5	25m	125J	1.7	500	10u	150	40u§		3.0k	125J	10 Ø	TO93#△
46	150C35B	350	150	125J	200m§	200m	2 5	25m	125J	1.7	500	10u	150	40u§	100	3.0k	125J	10 Ø	TO93#△
47	C290J	350	470 △			150m	3 5										125A		S132
48	C291J	350	470 △			150m	3 5										125A		S247a
49	6RW71GY	350	470	65C		250m	3 1	10mØ	125J	65 Ø	300				4 0	5.5k§	125	16	S132
50#	CS11M	360	75	40C	12m	7.0m	.25	80m		2.2	2.4					20	100	05	TO5
51	C37C⧄	360	25	37C	20mØ	80m	3.0	5 0mØ	105J	2 3 †	30	1 4u	5.0			175	105J	50 †	TO48
52	C40C⧄	360	35	62C	10mØ	40m	2.5	5.0mØ	125J	2.0 †	50	1 4u	5 0	8.0u	200 §	150	125J	50 †	TO48
53	C45C⧄	360	55	89C	100m	70m	3 0	8 0m	125J	3 0 †	500	5 0u	50	30u§	200 §	1 2k	125J	50 †	TO83
54	C46C⧄	360	55	89C	100m	70m	3 0	8.0m	125J	3.0 †	500	5 0u	50	30u§	200 §	1.2k	125J	50 †	TO49
55	NL555C	360	55	89C	300m	150m	2 5	10m	125J	3.5 †	500	8.0u	50	100u§	200 §	1.2k	125J	2 †	TO49
56	NL556C	360	55	89C	300m	150m	2.5	10m	125J	3 5 †	500	8 0u	50	100u§	200 §	1 2k	125J	2 †	TO83
57	NLF45C	360	55	89C	100m	70m	3.0	8.0m	125J	3.0 †	500	5.0u	50	30u§	200 §	1.2k	125J	500m†	TO83
58	NLF46C	360	55	89C	100m	70m	3.0	8 0m	125J	3.0 †	500	5 0u	50	30u§	200 §	1 2k	125J	500m†	TO94
59	2N1797	360	70 △	65C		130m$	3 0 $	5.0mØ	65C	1 8 †	70					1.0k*	125C	50 †	TO83
60	C55C⧄	360	110	60C	100m	70m	2.5	8.0m	125J	2.5 †	500	5 0u	5.0	15u§	200 §	1 2k	125J	50 †	TO49
61	C56C⧄	360	110	60C	100m	70m	2 5	8 0m	125J	2.5 †	500	5 0u	5 0	15u§	200 §	1.2k	125J	50 †	TO83
62	C154C⧄	360	110	83C	500m	200m	2 5	8.0m	125J	3 0 †	500	5.0u	50	7 0u§	200 §	1.4k	125J	2.0 †	TO94
63	C155C⧄	360	110	83C	500m	200m	2 5	8 0m	125J	3.0 †	500	5 0u	50	12u§	200 §	1.4k	125J	2 0 †	TO94
64	C156C⧄	360	110	83C	500m	200m	2 5	8 0m	125J	3 0 †	500	5 0u	50	7 0u§	200 §	1 4k	125J	2 0 †	TO83
65	C157C⧄	360	110	83C	500m	200m	2 5	8 0m	125J	3 0 †	500	5 0u	50	12u§	200 §	1 4k	125J	2 0 †	TO83
66	NLF150C	360	110	89C	500m	150m	2 5	10m	125J	2 6 †	500	8 0u	50	100u§	200 §	1.6k	125J	2.0 †	TO94
67	NLF152C	360	110	89C	500m	150m	2 5	10m	125J	2.6 †	500	8.0u	50	100u§	200 §	1.6k	125J	2 0 †	TO83
68	C178C	360	200	64C	500m	300m	2.5	12m	125J	3.5 †	1 5k	8 0u	100	150u§	200 §	2.5k	125J	2.0 †	TO93
69	C181C	360	235	65C	500m	300m	2 5	12m	125J	3 5 †	1.5k	8 0u	100	30u§	200 §	2.5k	125J	2.0 †	TO93
70	C180C⧄	360	235	80C	500m	150m	2 5	6 0m	125J	2 9 †	1.5k	8.0u	100	30u§	200 §	3 5k	125J	2.0 †	TO93
71	C185C⧄	360	235	80C	500m	300m	2.5	12m	125J	2.9 †	1.5k	8.0u	100	15u§	200 §	3 5k	125J	2.0 †	TO93
72	JAN2N2329	400			2 0m	35m	1.0	.01m	25	2.2	4 0					15	125	01	TO5
73	C35DR700	400			50m	40m	3 0	5 0m	125C	2 0	50	4 2u	10	50u	18	150	125J	50	S85
74	C354D	400			500m	500m	4.0	13m	25C	3 0 †	500 †		50	7 0u§	200 §	1 2k	125J	2.0	M514
75	C355D	400			500m	500m	4 0	13m	25C	3.0 †	500 †		50	12u§	100	1.2k	125J	2.0	M514
76	C385D	400			500m	300m	3 0	10m	25C	2 8 †	1 5k†		250	15u§	200 §	3.5k	125J	2 0 †	M514
77	C506D	400			500m	220m	5 0	10m	25C				300	40u§	200 §	8.0k	125J	5 0 †	M464
78	C510D	400			500m	200m	5 0	10m	25C	2 2 †	500 §		300	12u§	200	4.0k	125J	2.0 †	M464
79#	10RCV40	400		125	50m	45m	2.9	5 0m	125	2 3			135	10u	100	135	125	50	TO48
80	2N5792	400	120m	75A	10m$	350u	1.2 $	200u	125A	1 2	240m					4.0	125A	10m†	TO106
81	2N5723	400	200m	90A	2.0m	20u	600m	100u	150A	1 4	400m			50u	100	5 0	150A	25m†	TO18
82	AA104	400	25	75	2 0m	2 0u	60	2 0u	25	1.5	1 0	1 0u	1.0	20u	50	15	150		TO18
83	AA111⧄	400	25	75A	2 0m	20u	60	2.0u	25A	1.5	1 0 †				50	15 §*	150A	2 0 †	TO18
84	AA118⧄	400	25	75A	3 0m	200u	80	2.0u	25A	1 5	1 0 †				50	15 §*	150A	2.0 †	TO18
85	2N883	400 †	35	100C	5 0m	20m	80	10m△	125C	1.5	20					20 §*	150C		TO18
86	2N891	400 †	35	100C	1 0m	02m	.60	.02m	125C	1.5	20					20 §*	150C		TO18
87#	2SF108	400 Ø	38	25A		50m	1.0	10m	100J	2.5	4 0					15	100J	01	TO5
88	2N5728	400	390m	90A	2 0m	20u	600m	200u	150A	1.5	780m			50u	100	8 0	150A	25m†	TO5
89#	2SF525	400 Ø	40	25A	2 0mØ	3 0m	1 0	.25mØ	125J	1.2	1.0					20	125J	.1 Ø	TO5
90♦#	CR05A8	400 Ø	400m	25A		3 0m	1 0	250u	125J	1.2	1 0					20 △	125J	100mØ	TO5
91♦	C107D2	400	400m	32A$	3 0m	500u	800m	100u	110	2.5	4 0	1 2u	1 0	40u	8 0 Ø	15	110J	500m	M626
92♦	C107D4	400	400m	32A$	3 0m	500u	800m	100u	110	2 5	4.0	1 2u	1 0	40u	8.0 Ø	15	110J	500m	M628
93	AD104	400	.45	75A	2 0m	2u	60	2 0u	25A	1.5	1 0 †				50	15 §*	150A		TO5
94	AD111	400	45	75	2 0m	02m	60	2 0u	25	1.5	1 0	1 0u	1 0	20u	50	15	150		TO5
95	AD118	400	45	75	3 0m	20m	80	2 0u	25	1 5	1 0	1 0u	1 0	20u	50	15	150		TO5
96▼	S4001K	400	500m	80C	10m	10m	1.5	1 0m	100C	1.6	3 0	1 5u	2 0	25u§	20 §	50 §	125A	500m†	M506
97#	TD4001J	400	600m	25A	40mØ	20m	3 0	1.0m	125J	2.0	1 0	1.5u§	500m	15u§	50 Ø§	12		60m	C16e
98#	TDH4	400	600m	25A	5 0m	300u	3 0	1 0m	125J	2.0	1 0	1.5u§	500m	60u§	10 Ø§	12		900u	C16e
99#	TDRA4	400	600m	25A	20mØ	10m	3 0	1 0m	125J	2 0	1 0	1 5u§	500m	20u§	50 Ø§	12		30m	C16e
100#	CS0 6-04	400	650m		20m	10m	3.0			1 4	2 0			60u	200	35	125	10	
101#	CS11N	400	75	40C	12m	7 0m	25	70m		2 2	2 4					20	100	05	TO5
102♦	C107D1	400	800m	20A$	3 0m	500u	800m	100u	110	2 5	4 0	1 2u	1.0	40u	8.0 Ø	15	110J	500m	M627
103♦	C107D3	400	800m	20A$	3.0m	500u	800m	100u	110	2 5	4.0	1 2u	1.0	40u	8.0 Ø	15	110J	500m	M625
104#	T0 8N4A00	400	90	85C	20m	10m	3 0			1 2	1 0	2 0u	1 0	15u	15	19	125J	1 Ø	TO5
105#	CS1-04	400	1 0		50m	30m	3 0	1 0m	125	1 4	4.0			60u	100	55	125	10	
106#	TD4001	400	1 0	25C	1 0mØ	2 5m	5 0	1.0m	100J	2 0	75	1 5u	60	20u		12	100A	01	TO5
107#	TD4001S	400	1.0	25C	30mØ	30m	5 0	1 0m	100J	2 0	75	1 5u	60	40u		12	100A	.01	TO5
108#	TDR4	400	1 0	25A	30mØ	20m	3 0	1 0m	125J	2 0	1.0	1 5u§	500m	20u§	50 Ø§	12		60m	C16e
109#	T 75F400	400	1 0	60	20m	25m	2.5	1 0m	90J	2 0	1 0	2.0u	40	20u	20	15	45A	20	TO5
110#	TAG1-400	400	1.0	70C	25m	10m	2 0	1 0m	105	2.0	2 0					15	105J	30m†	TO5

SYMBOLS AND CODES EXPLAINED IN INTERPRETER

6. SILICON CONTROLLED RECTIFIERS

IN ORDER OF (1) PEAK REV. VOLT., (2) MAX. CONT. CUR., (3) TEMPERATURE, (4) TYPE No.

LINE No	4 TYPE No	1 PRV and VBO (V)	MAX. CONT. CURRENT 2 Idc (A)	3 at TEMP (°C)	MAX. HOLD CUR Ih @ 25°C (A)	MAX. GATE FIRING SPEC at 25°C Igf (A)	Vgf (V)	MAX SAT I Ir@PRV and Is@VBO (A)	at TEMP (°C)	MAX. FWD VOLT DROP at 25°C Vf (V)	@ If (A)	SWITCHING TIME at 25°C Ton (s)	for If (A)	Toff (s)	MIN. dV/dt @ 25°C (V/us)	ABS. MAX. RATINGS 1Cy PK SURGE I@25°C (A)	MAX TEMP (°C)	MAX GATE POWER (W)	DWG. No.
1#	TAG2-400	400	1 0	70C	5 0m	1 0m	2 0	1 0m	105	2 0	2 0					15	105	30m†	TO5
2	2N1599	400 △	1 0	80C		10m	3 0	1 0m	125C	2 0 §	1.0					15 §	125C		TO5
3	B03404	400	1 0	80C	10m	10m	1 5	1.5m	100C	1.6		1.5u	2.0	25u	20 §	50 §		500m†	M506
4	B04304	400	1 0	80C	10m	10m	1 5	1 5m	100C	1 6		1 5u	2 0	25u	20 §	50 §		500m†	C16aa
5	RTD0140	400	1 0	80C	5 0m	20m	1 0	10m	100	1 5	1 0	20u	1 0		100	15	100C		TO5
6	RTD0240	400	1.0	80C	10m	1 0m	1 0	1 0m	125	2.5	1.0	.20u	1 0		100	15	125C		TO5
7	RTD0340	400	1 0	80C	10m	20m	1 0	.50m	125	1 5	1.0	.20u	1 0		100	15	125C		TO5
8	RTD0440	400	1 0	80C	5.0m	10m	80	10m	125	1 4	1 0	20u	1 0		100	15	125C		TO5
9	RTD0540	400	1 0	80C	3 0m	02m	.80	.02m	125	1 4	1.0	20u	1 0		100	15	125C		TO5
10	RTF0140	400	1 0	80C	5.0m	20m	1 0	10m	100	1 5	1 0	20u	1.0		100	15	100C		TO5
11	RTF0240	400	1 0	80C	10m	1 0m	1.0	1 0m	125	2 5	1.0	20u	1 0		100	15	100C		TO5
12	RTF0340	400	1 0	80C	10m	20m	1.0	50m	125	1 5	1.0	20u	1.0		100	15	125C		TO5
13	RTF0440	400	1 0	80C	5 0m	10m	80	10m	125	1 4	1 0	20u	1.0		100	15	125C		TO5
14	RTF0540	400	1.0	80C	3 0m	02m	.80	02m	125	1 3	1 0	.20u	1.0		100	15	125C		TO5
15▼	S4001J	400	1 0	80C	10m	10m	1.5	1 0m	100C	1 6	7.0	1.5u	2 0	25u§	20 §	50 §	125A	500m†	M506
16▼	S4001M	400	1 0	80C	10m	10m	1 5	1 0m	100C	1 6	7 0	1 5u	2 0	25u§	20 §	50 §	125A	500m†	C16aa
17	2N4219	400	1 0	85	7 0m	300u	1 0	200u	125	2 0 †	3 1					15 §	125A	10 Ø	TO5
18#	T1N400	400	1 0	85C	25m	10m	2.0	1 0m	125J	1.9	2.0	5 0u	1 0	25u	10 §	15	125J	400m	TO5
19#	BTX18-400	400 §	1 0	105C	5 0 §	5 0m	2 0	200u	125	1 5	1 0		300m	20u	75 §	10	125	500mØ	TO5
20	SCR14A	400 ⧄	1 1	25C	20m	15m	2.0	900u△	125C	1 2 △	1 0	1.0u§	30	20u§		60 §	125J	5.0	A130
21	SCRF14A	400 ⧄	1 1	25C	50m	15m	2 0	90m△	125C	1 2 △	1 0	2.0u§	1.0	6 0u§		60 §	125J	5.0	A130
22#	BStB0126	400	1 2	45A		15m	3 0		115J						100 §	34	115J		M477
23	2N3529	400	1 3	25		15m	2 0									60	100A	5 Ø	Z25
24#	1RC40	400	1 3	75B	20m	18m	2 1	3 0m	100	1 7	1.3			15u	10	60	100	50	TO8
25	2N2014	400 †	1 3	80C	5 0m§	20m	1 0	10m†	125C	1.2	1 0					15 §	150C	05	TO5
26	FT2014	400 △	1 3	80C	5 0m§	.20m	1.0	10m	125C	2 0 †	1 0					15 *§	150J	05 †	TO5
27#	GC04001	400	1 4	25A	50mØ	25m	3 0	1 0m		2.0	1 0					3 0	100C	5 0	TO5
28	B03004	400	1 4	60C	6 0m	50u	1 0	100u	100C	1.6		1 5u	2 0	35u	4 0 §	50 §	125J	500m†	M506
29	B03005	400	1 4	60C	6 0m	200u	1 0	100u	100C	1.6		1 5u	2 0	30u	4 0 §	50 §	125J	500m†	M506
30	B03006	400	1 4	60C	6.0m	1 5m	1 0	100u	100C	1.6		1 5u	2 0	20u	10 §	50 §	125J	500m†	M506
31	B04004	400	1 4	60C	6 0m	50u	1 0	100u	100C	1 6		1 5u	2 0	35u	4 0 §	50 §	125J	500m†	C16aa
32	B04005	400	1 4	60C	6 0m	200u	1 0	100u	100C	1 6		1 5u	2 0	30u	4 0 §	50 §	125J	500m†	C16aa
33	B04006	400	1 4	60C	6 0m	1 5m	1 0	100u	100C	1.6		1 5u	2 0	20u	10 §	50 §	125J	500m†	C16aa
34#	BRY43	400 #	1 50	25A	25m	25m	3 0	1 0m	25	1 3	4 5					55	125	75m	
35▼	40812	400	1 5	75C	20m	15m	2 0			3 5	30	2.0u⧄	4 5		10 §	40	100C	10	C16ac
36#	17T4	400	1.6 △	25C	1 5mØ	10m	3 0	.25m△	25J	2 0	1.0			20u		15	100J		TO5
37#	CR1-401C	400 †	1 6	25C	1.9m	10m	3 0	1 0m	100J	2 0	1 0	1 4u	1 0			15	100A	10	TO5
38	TI145A4	400	1 6	60C	25m	25m	3 5			2 0	1 0					30	105C	30	TO5
39#	SF1G11A	400	1 6	62C	10m	1 0m	800m	100u	100J	3 4	10					17	150	100m	TO5
40	MCR914-6	400 ⧄	1 6	65C		8 0m	2 0	1 0m△	125J	1 4 △	1 0	70u	1 0	10u		15 △	125J	1 0	TO5
41#	BTX30-400	400	1.6	70C	25m	10m	2 0	1 0m	125	1 9	2 0					15	125J	30m†	TO5
42♦	ID301	400	1 6	70C	3.0m	200u	800m	100u	110	2 5	4 0	1 0	1 0	40u	20 Ø	15	110A		TO39
43▼	ID606	400	1.6	70C	3.0m	200u	800m	100u	110	2.5	4 0	1 0u	1 0	40u	20 Ø	15	110A		TO39
44	2N2329	400	1 6	85C	3.0m$	35m$	1 0 $	10m△	125C	1 5 §	1 6					15 §	125C	01	TO5
45	2N2329A	400	1 6	85C	3.0m$	75u$	.90 $	100u	125C	1.5 §	1 6					15 §	125C	10m	TO5
46#	SF1G11	400	1 6	89C	10m	1 0m	800m	100m	125C	3 4	10					17	125	100m	
47	C511D	400 Ø	1 6	104C	2.0m	20m	.80	01m	25J	2 2 △	4 0					15 §	125J	.10	M181a
48	2N1599A	400	1 6	110C	5.0m	2.0m	3.0	1 0m	125J	2.0	1.0					15 *	150J	.10	TO5
49	SCRFL40	400 ⧄	1 7	80C	50m	15m	2 0	90m	125C	1 2 △	1 0	2 0u§	1 0	12u§		60 §	125C	5 0	A130
50	SCRL40	400 ⧄	1 7	80C	20m	15m	2 0	.90m△	125C	1 2 △	1 0	1 3u§	1 0	15u§		60 §	125C	5 0	A130
51	B01411	400	1 9	80C	10m	10m	1 5	1 5m	100C	1 6		1.5u	2.0	25u	20 §	50 §		500m†	M507
52	B04311	400	1.9	80C	10m	10m	1 5	1 5m	100C	1 6		1 5u	2 0	25u	20 §	50 §		500m†	C16aa
53▼	S4003L	400	1 9	80C	10m	10m	1 5	1 0m	100C	1 6	12	1.5u	2 0	25u§	20 §	50 §	125A	500m†	M507
54▼	S4003M	400	1 9	80C	10m	10m	1.5	1 0m	100C	1.6	12	1 5u	2 0	25u§	20 §	50 §	125A	500m†	C16aa
55	JAN2N4200	400	2 0 △	85C	5 0m⧄	50m	1.5	4 0m	100C	25 †	30		2.0	15u	250 §	100 §	100J	20 Ø	S17c
56	2N4200	400 △	2 0	90C	3 0m§	100m§	2.0 §	2 0m△	105C	1.5 †	2.0	20u		20u	250	15 *	105A	20 Ø	S17a
57	MCR729-6	400 △	2 0 Ø	105J	15mØ	50m	1 5	2 0m△§	105J	1 5	2 0	20u	30		50 §	100 *†	105J	20 Ø	S258
58	2N3276	400 Ø	2 2	85C	2 0m	200u	80	200u△	150	1.8	2 2	3 0u⧄	5 0	22u⧄	1 0k§	15 §	150C	10	TO5
59♦	C106D2	400	2 4	20C$	3.0m	200u	800m	100u	110	2.2	4.0	1 2u	1 0	40u	8 0 Ø	20	110	500m	M626
60♦	C106D4	400	2.4	20C$	3 0m	200u	800m	100u	110	2 2	4 0	1 2u	1.0	40u	8 0 Ø	20	110	500m	M628
61#	TM4004	400	2 5	25A	30mØ	25m	3 0	3 0m	110J	2 0	8.0	2 0u§	1 0	60u§	50 Ø§	50		75m	S141d
62	UCR40L	400 △	2 5	25A	50m	50m				1 2	3 0	450n	30	15u	250	60	125J	3.0 ⧄	A253
63	B01024	400	2 7	60C	6 0m	50u	1.0	100u	100C	1.6		1.5u	2 0	35u	4.0 §	50 §	125J	500m†	M507
64	B01025	400	2 7	60C	6 0m	200u	1 0	100u	100C	1 6		1 5u	2.0	30u	4.0 §	50 §	125J	500m†	M507
65	B01026	400	2 7	60C	6 0m	1 5m	1 0	100u	100C	1 6		1 5u	2.0	20u	10 §	50 §	125J	500m†	M507
66	B04024	400	2 7	60C	6 0m	50u	1 0	100u	100C	1 6		1 5u	2 0	35u	4.0 §	50 §	125J	500m†	C16aa
67	B04025	400	2 7	60C	6 0m	200u	1 0	100u	100C	1 6		1 5u	2 0	30u	4 0 §	50 §	125J	500m†	C16aa
68	B04026	400	2 7	60C	6 0m	1 5m	1 0	100u	100C	1.6		1 5u	2 0	20u	10 §	50 §	125J	500m†	C16aa
69	NCM400C	400	3 0	$	15mØ	30m	1 5	2.0m	100J	1 5	5 0	1 0u⧄		10u⧄	25 §		100	20 Ø	S17
70#	2SF532	400	3 0	40C	5 0mØ	20m	2 0	1 5mØ	125J	1 2	3 0					50	125J	1 Ø	C63a△
71	RTR0140	400	3 0	65C	100m	50m	3 0	2.0m	100	2 5	10	20u	3 0		100	40	100C		TO66
72	C15D	400	3 0	75C	30m	25m	2 5	2 0m	105J	1 8	15					60	105J	50	TO64
73	NCR400B	400	3.0	80B$		25m	2 5	1 0m	125C	2 0 §	1 0					25 §	100A		S17
74	RTN0140	400	3.0	80C	100m	50m	3 0	2 0m	100	2 5	10	.20u	3 0		100	40	100C		TO64
75	RTS0140	400	3.0	80C	100m	50m	3 0	2 0m	100	2 5	10	20u	3 0		100	40	100C		M94
76#	CR3D8	400 Ø	3 0	95C	5.0mØ	20m	2 0	1 5m	125J	1 2	3 0					50 △	125J	1 0 Ø	C63a
77	40554	400	3.2	60C	50m	40m	3 5	1 5m†	100C						100 §	80	100C	50	TO66
78	2N3525	400	3.2	75		15m	2 0									60	100A	5 Ø	Z26
79	40505	400	3 2	75C	10mØ	15m	2 0	3 0m	100C	2 8	30	15u§	2 0		10 §	60	100C	13	M394
80	B01418	400	3.8	80C	20m	15m	1 5	1 5m	100C	1 6		1 5u	2 0	25u	20 §	100 §		500m†	M507
81	B05418	400	3 8	80C	2 0m	15m	1 5	1.5m	100C	1 6		1 5u	2 0	25u	20 §	100 §		500m†	S307
82	B18035	400	3 8	80C	20m	15m	1 5	1 5m	100C	1 6		1.5u	2 0	25u	20 §	100 §		500m†	
83	B19035	400	3 8	80C	20m	15m	1 5	1 5m	100C	1 6		1 5u	2 0	25u	20 §	100 §		500m†	
84▼	S4006B	400	3 8	80C	20m	15m	1 5	1 0m	100C	1 6	24	1 5u	2.0	25u§	20 §	100 §	125A	500m†	S307
85▼	S4006G	400	3 8	80C	20m	15m	1 5	1 0m	100C	1 6	24	1 5u	2.0	25u§	20 §	100 §	125A	500m†	M605
86▼	S4006H	400	3 8	80C	20m	15m	1 5	1 0m	100C	1 6	24	1 5u	2.0	25u§	20 §	100 §	125A	500m†	S361
87▼	S4006L	400	3 8	80C	20m	15m	1.5	1 0m	100C	1 6	24	1 5u	2.0	25u§	20 §	100 §	125A	500m†	M507
88♦	C106D1	400	4 0	20C	3 0m	200u	800m	100u	110	2 2	4.0	1 2u	1 0	40u	8 0 Ø	20	110	500m	M627
89♦	C106D3	400	4 0	20C	3 0m	200u	800m	100u	110	2 2	4.0	1 2u	1 0	40u	8 0 Ø	20	110	500m	M625
90▼	IR106D1	400 Ø	4 0	20C	3 0m	200u	800m	100u	110J	2 8 †	8.0	1 2u	1 0	40u	8.0 ØΔ	25 △	110J	100m†	Y202a
91▼	IR106D2	400 Ø	4 0	20C	3 0m	200u	800m	100u	110J	2 8 †	8 0	1 2u	1 0	40u	8 0 ØΔ	25 △	110J	100m†	M626a
92▼	IR106D3	400 Ø	4 0	20C	3 0m	200u	800m	100u	110J	2.8 †	8 0	1 2u	1 0	40u	8.0 ØΔ	25 △	110J	100m†	M625
93▼	IR106D4	400 Ø	4 0	20C	3 0m	200u	800m	100u	110J	2.8 †	8 0	1 2u	1 0	40u	8 0 ØΔ	25 △	110J	100m†	M628a
94▼	IR106D41	400 Ø	4 0	20C	3 0m	200u	800m	100u	110J	2 8 †	8.0	1 2u	1 0	40u	8 0 ØΔ	25 △	110J	100m†	M629
95	TC106D1	400	4 0 △	75C	3 0m	200u	800m	10u	25	2 2	4 0 †	1 0u	1 0	100u	100	20	150S	100m†	M627
96	TC106D2	400	4 0 △	75C	3 0m	200u	800m	10u	25	2 2	4 0 †	1 0u	1.0	100u	100	20	150S	100m†	M626
97	TC106D3	400	4 0 △	75C	3 0m	200u	800m	10u	25	2 2	4 0 †	1 0u	1.0	100u	100	20	150S	100m†	M625
98	TC106D4	400	4 0 △	75C	3 0m	200u	800m	10u	25	2 2	4 0 †	1 0u	1 0	100u	100	20	150S	100m†	M628
99	2N1604	400	4 0	80C		10m	3 0	1 0m	125C	2.0 §	1 0					25 §	125C		TO64
100	SCR34A	400 ⧄	4 0	80C	50m	15m	2 0	1.0m△	125C	2 0 △	3.0	2.0u§	1.0	6 0u		60 §	125J	5 0	S62
101	SCRF34A	400 ⧄	4 0	80C	25m	15m	2 0	1 0m△	125C	2 0 △	3 0	1 0u⧄	60			60 §	125J	5 0	S62
102#	T3N4C00	400	4 0	100B	25m	20m	3 0			1 2	3 0	2 0u	3 0	17u	15	55	125J	2 Ø	S62
103	3TCRH	400 ⧄	4 2	60B	50m	50m	3 0	1 5mØ	125J	1 4 Ø	3.0 §	2 0u	3 0	30u		40 *	150S	5 Ø	S56
104#	TM4007	400	4 5	25A	40mØ	40m	3 0	3 0m	110J	2 0	15	2 0u§	6 0	50u§	50 Ø§	80		120m	S141d
105#	TM4007S	400	4 5	25A	50mØ	40m	3 0	3 0m	110J	2 5	15	2.0u		15u	100 §	80		120m	S141d
106#	TRA74	400	4 5	25A	40mØ	40m	3 0	3 0m	110J	2 0	15	2 0u§	6 0	40u§	50 Ø§	80		120m	M94g
107#	TRA74D	400	4 5	25A	40mØ	40m	3 0	3 0m	110J	2 0	15	2 0u§	6.0	40u§	50 Ø§	80		120m	S131
108	40379	400	4 5	60C	12mØ	15m	2 0	1 0m	100C	2 5	30				20	80	100C	20 †	C41b
109	40508	400	4 5	60C	12mØ	15m	2 0	2 0m	100C	2 5	30				20 §	80	100C	13	M395
110	2N1777	400	4 7 △	60C		30m$	2 0 $	2 0mØ	125C	1 9 †	4 7					60 *	125C	50	TO64

SYMBOLS AND CODES EXPLAINED IN INTERPRETER

6. SILICON CONTROLLED RECTIFIERS

IN ORDER OF (1) PEAK REV. VOLT., (2) MAX. CONT. CUR., (3) TEMPERATURE, (4) TYPE No.

LINE No	4 TYPE No.	1 PRV and VBO (V)	MAX. CONT. CURRENT 2 Idc (A)	3 at TEMP (°C)	MAX. HOLD. CUR Ih @ 25°C (A)	MAX. GATE FIRING SPEC at 25°C Igf (A)	Vgf (V)	MAX SAT I Ir@PRV and Is@VBO (A)	at TEMP (°C)	MAX. FWD. VOLT. DROP at 25°C Vf (V)	@ If (A)	SWITCHING TIME at 25°C Ton (s)	for If (A)	Toff (s)	MIN. dV/dt @ 25°C (V/us)	ABS. MAX. RATINGS 1Cy PK SURGE I@25°C (A)	MAX TEMP (°C)	MAX GATE POWER (W)	DWG. No.
1#	BTY81	400	4 7	60B	15m§	25m§	2 0	8.0mØ	125J	2 3	20	5.0u§	10	15u§		60	125J	5 0	DO4
2#	BStB0226	400	4 7	63		15m	3 0		115J						100 §	34	115J		M478
3	3RC40	400 ⊠	4 7 △	92C	5.0mØ	15m	2 0	1 0m	105C	2.0	9 4 †					30 △	105J	.50 †	TO64
4	2N1777A	400	4.7 △	105C	80m$⊠	30m$	2 0 $	2.0mØ	150C	1.9 †	4 7					60 *	150C	.50	TO64
5	3RC40A	400 ⊠	4 7 △	105C	5.0mØ	10m	3.0	2 0m	125C	2 0	9 4 †					40 △	125J	50 †	TO64
6	RTR0240	400	5 0	65C	100m	50m	3 0	2.0m	100	2 5	15	20u	5 0		100	60	100C		TO66
7	RTR0340	400	5 0	65C	25m	15m	1 5	1 0m	100	2 0	15	20u	5 0		100	60	100C		TO66
8	RTR0440	400	5 0	65C	100m	50m	3 0	2 0m	125	2.5	15	20u	5.0		100	60	125C		TO66
9	2N4172	400	5.0	70C	60m$	50m$	2.5 $	2 0m	100C							100 *	100C	5 0 Ø	S262
10	2N4180	400	5 0	70C	60m$	50m$	2.5 $	2.0m	100C							100 *	100C	5.0 Ø	S263
11#	TAG3-400	400	5 0	70	25m	15m	2 0	1.5m	105	2 1	10					60	105	5 0	TO66
12#	2SF268	400	5 0	73C	10mØ	30m	2 5	3 0mØ	100J	1 3	5.0					90	100J	5 Ø	S141b
13	2N4156	400	5 0	75C	60m$	50m$	2.5 $	2 0m	100C							100 *	100C	5.0 Ø	C84
14	2N4164	400	5.0	75C	60m$	50m$	2.5 $	2 0m	100C							100 *	100C	5 0 Ø	C85
15	2N4188	400	5 0	75C	60m$	50m$	2 5 $	2 0m	100C							100 *	100C	5 0 Ø	S264
16	2N4196	400	5 0	75C	60m$	50m$	2 5 $	2.0m	100C							100 *	100C	5.0 Ø	M363
17	2N4443	400	5 0	75	70m§	60m§	2 5 §	2 0m	100	2 5	15					80	100A		M386
18#	BStC0126	400	5.0	80C	100m	40m	2.0	2.0m	125J	1.8	15				50 §	70	125J		S343
19#	BStC0526	400	5.0	80C	100m	40m	2 0	2.0m	125J	1.8	15				50 §	70	125J		TO66
20	RTN0240	400	5 0	80C	100m	50m	3 0	2 0m	100	2 5	15	20u	5.0		100	60	100C		TO64
21	RTN0340	400	5 0	80C	25m	15m	1.5	1 0m	100	1.8	15	20u	5 0		100	60	100C		TO64
22	RTN0440	400	5 0	80C	100m	50m	3 0	2 0m	125	2 5	15	20u	5.0		100	60	125C		TO64
23	RTN0540	400	5.0	80C	25m	15m	1 5	1.0m	125	1 8	15	.20u	5.0		100	60	125C		TO64
24	RTN0640	400	5 0	80C	25m	15m	1 5	1 0m	150	1 8	15	20u	5.0		100	60	150C		TO64
25	RTR0540	400	5 0	80C	25m	15m	1 5	1.0m	125	2 0	15	20u	5 0		100	60	125C		TO66
26	RTS0240	400	5 0	80C	100m	50m	3.0	2 0m	100	2 5	15	.20u	5.0		100	60	100C		M94
27	RTS0340	400	5 0	80C	25m	15m	1 5	1 0m	100	1.8	15	.20u	5 0		100	60	100C		M94
28	RTS0440	400	5 0	80C	100m	50m	3 0	2 0m	125	2.5	15	20u	5.0		100	60	125C		M94
29	RTS0540	400	5 0	80C	25m	15m	1 5	1 0m	125	1 8	15	20u	5.0		100	60	125C		M94
30▼	TIC106D	400	5 0	80	5.0m	200u	1.0	1 0m	110C	1 7	5 0				10 Ø	30	110C	1.3	
31	CM104	400	5 0	100C	3 0m	20m	80	.30m†	150C	2.5	5.0	1.0u⊠	1 0	50u⊠	100	30	150A		TO59
32	CM110	400	5 0	100C	3 0m	20m	80	50m†	150C	3.0	5 0	.50u	1 0	50u	150 Ø	20	150A		TO59
33#	CR5-402B	400 †	5.0	125C	150m	80m	3 0	5.0m	125C	3.0	5 0	2.0u	5.0	12u	20		125C	1 0	TO48
34	B01425	400	5 4	80C	20m	15m	1 5	1 5m	100C	1.6		1.5u	2.0	25u	20 §	100 §		500m†	M507
35	B05425	400	5 4	80C	20m	15m	1 5	1 5m	100C	1.6		1 5u	2.0	25u	20 §	100 §		500m†	S307
36	B18045	400	5.4	80C	20m	15m	1 5	1 5m	100C	1 6		1.5u	2 0	25u	20 §	100 §		500m†	
37	B19045	400	5 4	80C	20m	15m	1 5	1 5m	100C	1.6		1 5u	2.0	25u	20 §	100 §		500m†	
38▼	S4008B	400	5 4	80C	20m	15m	1 5	1 0m	100C	1.6	33	1 5u	2 0	25u§	20 §	100 §	125A	500m†	S307
39▼	S4008G	400	5 4	80C	20m	15m	1.5	1.0m	100C	1.6	33	1.5u	2.0	25u§	20 §	100 §	125A	500m†	M605
40▼	S4008H	400	5 4	80C	20m	15m	1 5	1.0m	100C	1.6	33	1.5u	2.0	25u§	20 §	100 §	125A	500m†	S361
41▼	S4008L	400	5 4	80C	20m	15m	1 5	1 0m	100C	1.6	33	1 5u	2 0	25u§	20 §	100 §	125A	500m†	M507
42	B01053	400	5 5	60C	6 0m	200u	1 0	100u	100C	1.6		1 5u	2.0	30u	4.0 §	100 §	125J	500m†	M507
43	B01054	400	5 5	60C	6 0m	1 5m	1 0	100u	100C	1 6		1 5u	2 0	20u	10 §	100 §	125J	500m†	M507
44	B05003	400	5 5	60C	6.0m	200u	1 0	100u	100C	1.6		1.5u	2 0	30u	4 0 §	100 §	125J	500m†	S307
45	B05004	400	5 5	60C	6 0m	1.5m	1.0	100u	100C	1 6		1 5u	2.0	20u	10 §	100 §	125J	500m†	S307
46#	2SF227	400	6 0	25C		25m	3 0	2 0m	100C	1 2 △	3.0					50	100	5 Ø	S141
47#	TM4010	400	6 0	25A	40mØ	40m	3 0	3 0m	110J	2.0	20	2 0u§	6 0	50u§	50 Ø§	100		120m	S141d
48#	TRA4	400	6 0	25A	50mØ	40m	3.0	3 0m	110J	2.0	20	2.0u§	6.0	50u§	50 Ø§	100		120m	M94g
49#	TRA4D	400	6 0	25A	50mØ	40m	3 0	3 0m	110J	2 0	20	2.0u§	6.0	50u§	50 Ø§	100		120m	S131
50	NCF400C	400	6 0	70B$		30m$	2.0 $	4.5mØ	60C	1.9 $	4 7			12u⊠		60	100A	.50	S17
51	T406-5	400	6 0	70	50m	80m	5 0			2.2		2.5u			20 Ø	100	100J		TO5
52	T406-66	400	6 0	70	50m	80m	5 0			2.2		2.5u			20 Ø	100	100J		TO66
53#	T6F400C	400	6 0	85C	60m	40m	2 0	2 0m	125J	2.5	20	1.0u	10	12u§	400 §	100 §	125J	15	S131j%
54#	T6N400C	400	6 0	85C	60m	20m	2.0	2 0m	125J	2.5	20	1.0u	10	17u§	50 §	100 §	125J	15	S131j%
55#	T6N400H	400	6.0	85C	60m	20m	2.0	2.0m	125J	2 5	20	1 0u	10	17u§	50 §	100 §	125J	15	M94e%
56#	TW6N400C	400	6 0	85C	60m	50m	3 0	2 0m	125J	2.5	10				5 0 §	60 §	125J	3.0	S131j%
57#	TW6N400H	400	6 0	85C	60m	50m	3.0	2.0m	125J	2.5	10				5.0 §	60 §	125J	3.0	M94e%
58#	CR5-401B	400 †	6.0	95C	150m	80m	3.0	5.0m	125C	3.0	5.0	2 0u	5.0	12u			125C	1 0	TO48
59#	TP4004	400	6 0	100C	100m	40m	3 0	3.0m		1.2	4.0	2 0u	4.0	30u	100 Ø	80	125C	.50	S18a
60#	BTY79-400R	400	6 1	85	10m	25m	2 5			2 3	20	3 0u	10	15u	20	80	125J	500m†	S63c
61#	CS5-04	400	6 2	100	50m	30m	3 0	3 0m	125	1 7	20			60u	200	110	125	10	
62▼	GCS40	400	6 3	80C	50m	25m	1 5	1 0m	100	1 8	20	1.5u	6 0	4 0u	200 Ø	60 §	110A	500m†	S307
63#	4RCM40	400	6.3	85B	45m	85m	3 0	1 0m	105	1 9	4.0			20u	20	50	105	50	TO64
64	40739	400	6.3	85C	20m	15m	2 0			2.5	100	1.6u	30	15u	10 §	100	100C	40 Ø	M94
65	40743	400	6 3	85C	20m	15m	2 0			2 5	100	1 6u	30	15u	10 §	100	100C	40 Ø	S131
66	40747	400	6 3	85C	20m	15m	2 0			2.5	100	1 6u	30	15u	10 §	100	100C	40 Ø	S304
67	B01432	400	6 35	80C	20m	15m	1 5	1 5m	100C	1.6		1 5u	2 0	25u	20 §	100 §		500m†	M507
68	B05432	400	6 35	80C	20m	15m	1 5	1 5m	100C	1 6		1.5u	2.0	25u	20 §	100 §		500m†	S307
69	B18055	400	6 35	80C	20m	15m	1 5	1 5m	100C	1.6		1 5u	2.0	25u	20 §	100 §		500m†	
70	B19055	400	6.35	80C	20m	15m	1.5	1.5m	100C	1.6		1 5u	2.0	25u	20 §	100 §		500m†	
71▼	S4010B	400	6 35	80C	20m	15m	1.5	1 0m	100C	1 6	41	1.5u	2.0	25u§	20 §	100 §	125A	500m†	S307
72▼	S4010G	400	6.35	80C	20m	15m	1 5	1.0m	100C	1.6	41	1.5u	2 0	25u§	20 §	100 §	125A	500m†	M605
73▼	S4010H	400	6 35	80C	20m	15m	1 5	1.0m	100C	1.6	41	1.5u	2 0	25u§	20 §	100 §	125A	500m†	S361
74▼	S4010L	400	6 35	80C	20m	15m	1 5	1 0m	100C	1.6	41	1.5u	2.0	25u§	20 §	100 §	125A	500m†	M507
75#	BTY34-400R	400	6 4	110B		30m	3 0	5.0m	150J	2.3	20	3 0u	10	20u		50 *	150J	.5 †	TO48
76#	2SF1118	400	6 5	25	6 0	28m	2 0	2.0	125J	1.4	10		3.0	20	50	50	125J	500m	C63c
77#	2SF18	400 ⊠	6 5	60B		20m	2 1	2 0m	100J	2 3	20					50	100J	.50	S105a
78#	GCO4005	400	7 0	25A	100mØ	100m	3 0	1.5m		2.0	5.0					35	100J	25	TO48
79	5TCRH	400 ⊠	7 0	60B	50m	50m	3 0	1 5mØ	125J	83 Ø	5 0 §	2.0u	5 0	30u		60 *	150S	5 Ø	S56
80	40655	400	7 0 △	60C	20m	15m	1 5					1 5u	4.5	15u§	20 §	80 §	100C	500m†	C16c
81	40657	400	7 0 △	60C	20m	15m	1 5					1.5u	4.5	15u§	20 §	80 §	100C	500m†	M457
82	40659	400	7 0 △	60C	20m	15m	1 5					1 5u	4.5	15u§	20 §	80 §	100C	500m†	M466
83	SCR54A	400 ⊠	7 0	60C	25m	20m	2 0	1 0m△	125C	1.9 △	15	1 0u§	100	20u§		100 §	125J	10	S121
84	SCRF54A	400 ⊠	7 0	60C	50m	20m	2.0	1 0m△	125C	1 9 △	15	2.0u§	10	6 0u§		100 §	125J	10	S121
85	SCRF540	400 ⊠	7 0	60C	50m	25m	2 0	1 0m	125C	1.9 △	15	2 0u§	10	12u§		100 §	125J	10	S121
86	TI3014	400	7 0	60C	30m	25m	3 0	1 0m	125	1.8	5.0						125C	5.0 Ø	M245
87	C12D	400	7 0 △	70C	8 0mØ	15m	2.0	9.0m	125J	1.8	15	1 0u	10	12u§		60	125J	5 0	S17
88#	T5F400	400	7 0	75	20m	35m	3 0	10m	90J	2.5	25	2 0u	5.0	20u	20	15	45A	.20	S155
89	2N3939	400	7 0	80C	110m	60m	3 2	1 0m	125C	2.3	7 0	3 0u		8 0u§		100 *§	125C	.50	TO64
90	2N5166	400	7 0	85C	90m§	75m§	2 5 §	5 0m	100C	1.7 †	41					240 *	100C	.5 †	M94b
91	2N5170	400	7.0	85C	90m§	75m§	2 5 §	5 0m	100C	1 7 †	41					240 *	100C	5 †	S131c
92	JAN2N1777A	400	7 0	105	25m	30m	2 0	1 0m	25	1 8	14 †	5 0u	5.0	30u	5.0	60	150A		TO64
93	5RC40	400 ⊠	7 4 △	60C	5.0mØ	15m	2 0	1 0m	105C	1.9	15 †	2 5u	60		20	60 △	105J	50 †	TO64
94	5RCF40A	400 ⊠	7 4 △	60C	5.0mØ	15m	1 4	1 0m	125C	1.9	15 †	2 5u	5 0	12u		60 △	125J	.50 †	TO64
95	5RC40A	400 ⊠	7 4 △	80C	5.0m	15m	1 4	2 0m	125C	1 9	15 †	2 5u				75 △	125J	50 †	TO64
96	C20D	400	7 4 △	80	30m	25m	1.5	1 7m	100J	1 8	10					80 §	100J	.50	S131
97	C22D	400	7.4 △	80	30m	25m	1 5	1 7m	100J	1.8	10					80 §	100J	.50	M94
98#	CR4-401A	400 †	7 4 △	80	30m	25m	2 0	2 5m	100J	1.8	10	1 1u	8 0	50u	20 △	80 △	125J	5 0 Ø	M94
99#	CR4-401B	400 †	7 4 △	80	30m	25m	2 0	2 5m	100J	1.8	10	1 1u	8 0	50u	20 △	80 △	125J	5.0 Ø	S131
100#	TAG6-400	400	7 5	70C	25m	25m	2 0	1 5m	105	1.7	10					100	105	500m†	TO66
101#	TAG7-400	400	7 5	70C	25m	25m	2 0	1 5m	105	1 7	10					100	105	500m†	TO48
102#	TAG7S400	400	7 5	70C	25m	25m	2 0	1 5m	105	1 7	10			12u		100	105	500m†	TO48
103#	BTX31-400	400	7 5	85	15m	15m	3 0	1 5m	125	1 7	10					100	125	5 0	TO48
104#	BTX31S400	400	7 5	85	15m	15m	3 0	1 5m	125	1 7	10			12u		100	125	5 0	TO48
105#	BTX71-400	400	7 5	85	40m	40m	3 0	1 5m	125	1 7	10	1 4u	5 0	20u	200	100	125	5 0	TO48
106#	BTX71S400	400	7 5	85	40m	40m	3 0	1 5m	125	1.7	10	1 4u	5 0	12u	200	100	125	5.0	TO48
107	2N3757	400	7 5	100	200m	200m	2 3	4 0m	120A				10	75u	200	250 *	120A	2.0	TO48
108	B01073	400	7 8	60C	6 0m	200u	1 0	100u	100C	1.6		1.5u	2 0	30u	4.0 §	100 §	125J	500m†	M507
109	B01074	400	7 8	60C	6 0m	1 5m	1 0	100u	100C	1 6		1 5u	2 0	20u	10 §	100 §	125J	500m†	M507
110	B05023	400	7 8	60C	6 0m	200u	1 0	100u	100C	1.6		1 5u	2.0	30u	4 0 §	100 §	125J	500m†	S307

SYMBOLS AND CODES EXPLAINED IN INTERPRETER

6. SILICON CONTROLLED RECTIFIERS

IN ORDER OF (1) PEAK REV. VOLT., (2) MAX. CONT. CUR., (3) TEMPERATURE, (4) TYPE No.

LINE No.	4 TYPE No.	1 PRV and VBO (V)	MAX. CONT. CURRENT 2 Idc (A)	3 at TEMP (°C)	MAX. HOLD. CUR Ih @ 25°C (A)	MAX. GATE FIRING SPEC at 25°C Igf (A)	Vgf (V)	MAX SAT I Ir@PRV and Is@VBO (A)	at TEMP (°C)	MAX. FWD. VOLT. DROP at 25°C Vf (V)	@ If (A)	SWITCHING TIME at 25°C Ton (s)	for If (A)	Toff (s)	MIN. dV/dt @ 25°C (V/us)	ABS. MAX. RATINGS 1Cy PK SURGE I@25°C (A)	MAX TEMP (°C)	MAX GATE POWER (W)	DWG. No.
1	B05024	400	7.8	60C	6.0m	1.5m	1.0	100u	100C	1.6		1 5u	2.0	20u	10 §	100 §	125J	500m†	S307
2	C122D	400	8.0		30m	25m	1.5	2.0m	100C	2.2 †	16				40 Ø	80	100J		M490
3#	SF5G11	400	8.0	24		20m	2.0	2 0m	125J	2.0	20					60	125J	500m	S141a
4	MCR2315-6	400 △	8 0 △	70C	50m	40m	1.5	3.0m	100J	1.6	5.0	1.0u	5.0	15u	50 Ø§	80 △	100J	5.0 Ø	S230
5	MCR2614L6	400 △	8 0 △	70C	50m	40m	1.5	3.0m	100J	1.6	5.0	1.0u	5 0	15u	50 Ø§	80 △	100J	5.0 Ø	C85a
6▼	TIC116D	400	8.0	70	40m	20m	1.5	2.0m	110C	1.7	8.0				100 Ø	80	110C	5.0	
7	2N4319	400	8.0	85	25m	15m	1.2	2.0mt	150	2.0	8.0				200	60 §*	150A	.5 †	C63d
8#	T6F400H	400	8 0	85C	60m	40m	2.0	2.0m	125J	2.5	20	1.0uØ	10	12u§	400 §	75 §	125J		M94e%
9#	T8F400C	400	8.0	85C	60m	40m	2.0	2.0m	125J	2.0	20	1.0u	10	12u§	400 §	120 §	125J	15	S131j%
10#	T8N400C	400	8.0	85C	60m	20m	2.0	2.0m	125J	2 0	20	1.0u	10	18u§	50 §	120 §	125J	15	S131j%
11#	T8N400H	400	8 0	85C	60m	20m	2.0	2.0m	125J	2.0	20	1.0u	10	18u§	50 §	120 §	125J	15	M94e%
12#	TW8N400C	400	8.0	85C	60m	50m	3.0	2.0m	125J	1.9	10				5.0 §	80 §	125J	3.0	S131j%
13#	TW8N400H	400	8.0	85C	60m	50m	3.0	2 0m	125J	1.9	10				5.0 §	80 §	125J	3.0	M94e%
14▼	HEP620-RT	400	8.0	100J	25mØ§	20m§										200 §	100		C84
15▼	HEP621-RT	400	8 0	100J	25mØ§	20m§										200 §	100		C85
16▼	HEP622-RT	400	8.0	100J	10mØ§	10m§										80 §	100		M386
17▼	HEPR1222-RT	400	8.0	100J	10mØ§	10m§										80 §	100		M386
18▼	HEPR1245-RT	400	8.0	100J	25mØ§	20m§										100 §	100		S230
19	MCR2604-6	400	8.0	100J	25m	20m	1.5	2 0m	100J	1.3	5.0	1.0u	5 0	12u	50	100	100J	5.0	M304a
20	MCR2605-6	400	8.0	100J	25m	20m	1.5	2.0m	100J	1.3	5.0	1 0u	5.0	12u	50	100	100J	5.0	M305
21#	CS8-04	400	8 2	100	50m	30m	3.0	3.0m	125	1.6	26			60u	200	170	125	10	
22#	BTX64/400R	400	8.5	85B	10mØ§	65m	3.5	8.0m	125J	3.0	50	.40u	10	10u	85	140 *	125J	.5 †	TO48
23#	BTX75-400R	400	8.5	110B	10m§Ø	65m	3.5	8.0m	150J	3.0	50	3.0u	10	25u		140	150J	5 †	TO48
24#	TP4006	400	9.0	100C	100m	40m	3.0	3 0m		1.2	6.0	2.0u	6.0	30u	100 §Ø	100	125C	.50	S18a
25	B01093	400	9 1	60C	6.0m	200u	1 0	100u	100C	1.6		1.5u	2.0	30u	4 0 §	100 §	125J	500mt	M507
26	B01094	400	9 1	60C	6.0m	1.5m	1 0	100u	100C	1.6		1 5u	2.0	20u	10 §	100 §	125J	500mt	M507
27	B05043	400	9 1	60C	6.0m	200u	1.0	100u	100C	1.6		1.5u	2.0	30u	4 0 §	100 §	125J	500mt	S307
28	B05044	400	9 1	60C	6.0m	1.5m	1 0	100u	100C	1.6		1.5u	2.0	20u	10 §	100 §	125J	500mt	S307
29#	T8F400H	400	9 5	85C	60m	40m	2 0	2.0m	125J	2.0	20	1.0uØ	10	12u§	400 §	95 §	125J		M94e%
30	NCF400D	400	10		15mØ	50m	3.5	4 0m	100	1.2	10	500n	10	6.0u	25 §	125	100A	.50 †	TO48
31	NCM400E	400	10		25mØ	150m	2.0	4 0m	100	1.2	10	500n	10	6.0u	200 §		120A	1.0 †	TO48
32#	BTY87	400	10	25A	20m§	25m§	3.5	4 0mØ	100J	1.2	16	4 5u§	50	20u§		120	100A	5.0	S98
33#	TRA14	400	10	25A	50mØ	80m	3.0	3.0m	110J	2.0	30	2.0u§	10	50u§	50 Ø§	125		240m	M94g
34#	TRA14D	400	10	25A	50mØ	80m	3.0	3 0m	110J	2.0	30	2 0u§	10	50u§	50 Ø§	125		240m	S131
35	2N1849	400	10 △	35C		150m$	3 5 $	4 0mØ	35C	2.5 †	10					125 *	100C	.5 †	TO48
36#	CR10B8	400	10	59C		30m	2 5	3.0m	100J	1 6	30					150 △	100J	5 0 Ø	S334
37#	2SF278	400	10	63C	10mØ	30m	2 5	3 0mØ	100J	1 2	10					90	100J	5 Ø	S141b
38#	2SF278A	400	10	63C	10mØ	30m	2 5	3 0mØ	100J	1.2	10		10	15mØ	100 △	90	100J	5 0 Ø	S141b
39	RTT0140	400	10	65C	200m	50m	3 0	2.0m	100	2.5	30	.20u	10		100	100	100C		TO48
40	RTT0440	400	10	65C	200m	50m	3 0	2 0m	125	2.5	30	.20u	10		100	100	125C		TO48
41	RTU140	400	10	65C	20	50m	3.0	2 0m	100	2.5	30	200n	10		100	100	100C		S131
42	RTU0440	400	10	65C	200m	50m	3 0	2.0	125	2.5	30	200n	10		100	100	125C		S131
43▼#	CR10CY8	400	10	66C		40m	2 5	4.0m	125J	2.5	30		10	15uØ	100 △	140 △	125J	5 0 Ø	S350
44#	CR5-402AB	400	10	70C	20mØ	80m	3.0	10m	100C	2.0	16	2.0u	20	20uØ	20	90	125	5.0 Ø	
45#	CR5-402BB	400	10	70C	20mØ	80m	3 0	10m	100C	2 0	16	2.0u	20	15uØ	20	90	125	5.0 Ø	
46#	CR5-402CB	400	10	70C	20mØ	80m	3 0	10m	100C	2.0	16	2 0u	20	12uØ	20	90	125	5.0 Ø	
47#	CR5-402DB	400	10	70C	20mØ	80m	3 0	10m	100C	2.0	16	2.0u	20	8.0uØ	20	90	125	5.0 Ø	
48#	CR5-402EB	400	10	70C	20mØ	80m	3 0	10m	100C	2.0	16	2 0u	20	6.0uØ	20	90	125	5.0 Ø	
49#	CR5-4029B	400	10	70C	20mØ	80m	3.0	10m	100C	2.0	16	2.0u	20	4.0uØ	20	90	125	5.0 Ø	
50#	CR6-503RB	400	10	70C	28mØ	80m	3 0	5.0mt	100C	2.0	16	2 5u	20	80u	20	100	125	5 0	
51#	CR6-503RBA	400	10	70C	28mØ	80m	3 0	5.0mt	100C	2.0	16	2.3u	20	80u	200	100	125	5.0	
52#	TAG10-400	400	10	70	25m	25m	3 0	1.5m	105	2.0	15					120	105	5 0	TO48
53#	TAG10S400	400	10	70	25m	25m	3 0	1 5m	105	2.0	15			12u		120	105	5.0	TO48
54	2N1849A	400	10 △	80C		150m$	3 7 $	4.0mØ	80C	2.5 †	10					125 *	125C	5 †	TO48
55	B01439	400	10	80C	20m	20m	1.5	1.5m	100C	1.6		1.5u	2 0	25u	20 §	150 §		600mt	M507
56	B05439	400	10	80C	20m	20m	1 5	1.5m	100C	1.6		1.5u	2 0	25u	20 §	150 §		600mt	S307
57	B18065	400	10	80C	20m	20m	1.5	1.5m	100C	1.6		1 5u	2.0	25u	20 §	150 §		600mt	
58	B19065	400	10	80C	20m	20m	1.5	1 5m	100C	1.6		1.5u	2.0	25u	20 §	150 §		600mt	
59▼	S4016B	400	10	80C	20m	20m	1 5	1.0m	100C	1.6	64	1.5u	2 0	25u§	20 §	150 §	125A	600mt	S307
60▼	S4016G	400	10	80C	20m	20m	1.5	1.0m	100C	1.6	64	1.5u	2 0	25u§	20 §	150 §	125A	600mt	M605
61▼	S4016H	400	10	80C	20m	20m	1.5	1.0m	100C	1.6	64	1 5u	2 0	25u§	20 §	150 §	125A	600mt	S361
62▼	S4016L	400	10	80C	20m	20m	1 5	1.0m	100C	1.6	64	1.5u	2.0	25u§	20 §	150 §	125A	600mt	M507
63▼#	CR10C8	400	10	84C		30m	2.5	3.0m	125J	1.6	30				20 △	150 △	125J	5 0 Ø	S350
64#	BTX32-400	400	10	85	25m	25m	3.0	1 5m	125	2.0	15					120	125	5.0	TO48
65#	BTX32S400	400	10	85	25m	25m	3.0	1.5m	125	2.0	15			12u		120	125	5.0	TO48
66#	BTX72-400	400	10	85	40m	40m	3.0	1.5m	125	2.0	15	1.4u	5.0	20u	200	120	125	5.0	TO48
67#	BTX72S400	400	10	85	40m	40m	3.0	1 5m	125	2.0	15	1 4u	5 0	12u	200	120	125	5.0	TO48
68#	T10N400C	400	10	85C	60m	20m	2 0	2.0m	125J	1.8	20	1.0u	10	20u§	50 §	140 §	125J	15	S131j%
69#	T10N400H	400	10	85C	60m	20m	2.0	2.0m	125J	1.8	20	1.0u	10	20u§	50 §	140 §	125J	15	M94e%
70#	TW10N400C	400	10	85C	60m	50m	3.0	2.0m	125J	1.7	10				5.0 §	100	125J	3.0	S131j%
71#	TW10N400H	400	10	85C	60m	50m	3.0	2 0m	125J	1.7	10				5.0 §	100	125J	3.0	M94e%
72#	CR10-402B	400 †	10	125C	150m	80m	3.0	5.0m	125C	2.0	10	2.0u	10	30u	20		125C	1.0	TO48
73#	2SF28	400 Ø	11	50B		40m	3.0	8.0m	100J	2.8	50					125	100J	.50	S106a
74	UCR40	400 △	12	55C	50m	50m				1.2	3.0	450n	30	15u	250	60	125J	10 Ø	S296
75#	CR8-401C	400 †	12	70C	15mØ	25m	2.5	2.5m	125J	2.0	20	1.1u	8.0	50u	20 △	80 △	125J	5.0 Ø	TO64
76▼	TIC126D	400	12	70	40m	20m	1 5	2.0m	110C	1.4	12				100 Ø	100	110C	5 0	
77#	BTX65/400R	400	12	85B	10m§Ø	65m	3.5	8 0m	125J	2.0	50	40u	10	10u	85	200	125J	.5 †	TO48
78#	CR10-401B	400 †	12	85C	150m	80m	3.0	5.0m	125C	2.0	10	2.0u	10	30u			125C	1.0	TO48
79#	CR10-402AB	400	12	85C	20mØ	80m	3 0	10m	125C	2.0	50	2.6u	32	20uØ	20	120	125	5.0 Ø	
80#	CR10-402BB	400	12	85C	20mØ	80m	3.0	10m	125C	2.0	50	2.6u	32	15uØ	20	120	125	5.0 Ø	
81#	CR10-402CB	400	12	85C	20mØ	80m	3.0	10m	125C	2.0	50	2.6u	32	12uØ	20	120	125	5.0 Ø	
82#	CR10-402DB	400	12	85C	20mØ	80m	3 0	10m	125C	2.0	50	2.6u	32	8.0uØ	20	120	125	5 0 Ø	
83#	CR10-402EB	400	12	85C	20mØ	80m	3.0	10m	125C	2.0	5.0	2.6u	32	6.0uØ	20	120	125	5.0 Ø	
84#	CR10-4029B	400	12	85C	20mØ	80m	3.0	10m	125C	2.0	5.0	2.6u	32	4.0uØ	20	120	125	5.0 Ø	
85#	BTX76-400R	400	12	110B	10m§Ø	40m	3.0	8 0m	150J	2.0	50	3.0u	10	25u		200	150J	5 †	TO48
86	40751	400	12.5	75C	20m	15m	2 0			2.4	100	2.0u	30	20u	10 §	200	100C	40 Ø	M94
87	40755	400	12.5	75C	20m	15m	2.0			2 4	100	2 0u	30	20u	10 §	200	100C	40 Ø	S131
88	40759	400	12.5	75C	20m	15m	2.0			2.4	100	2.0u	30	20u	10 §	200	100C	40 Ø	S304
89#	8RCM40	400	12.6	65B	65m	85m	3.0	5.0m	105	2.6	8.0			20u	20	100	105	.50	TO48
90#	8RCV40	400	12 6	105	50m	45m	2 9	5.0m	105	2.6			100	10u	100	100	105	.50	TO48
91	2N1849B	400	13 △	80C		75m	3 7 $	1.0mØ	125C	1.8 †	13					150 *	125C	5 †	TO48
92	2N3670	400	13	80C	50m	40m	2 0	1.5m	100C	1.8	25					200	100	5 Ø	Z24
93#	CR12-503RB	400	14 5	75C	28mØ	60m	3 0	5 0mt	125C	2.0	32	2.3u	20	85u	20	160	125	5.0	
94#	CR12-503RBA	400	14.5	75C	28mØ	60m	3 0	5 0mt	125C	2.0	32	2 3u	20	85u	200	160	125	5 0	
95#	2SF77	400	15	25C		50m	3 0	4 0m	100C	1.2 △	7 0					100	100	5 Ø	S94
96#	BTY87/400R	400	15	61A	10mØ§	65m	3 5	8 0m	125J	3.0	50	3.0u§	10	15u	100	106	125J	50	TO48
97#	TAG15-400	400	15	70	50m	50m	3 0	1.5m	105	2.0	20					150	105	5.0	TO48
98#	TAG15S400	400	15	70	50m	50m	3 0	5 0m	105	2.0	20			12u		150	105	5.0	TO48
99#	BTX70-400	400	15	85	50m	50m	3 0	1 5m	125	2.0	20					150	125	5.0	TO48
100#	BTX70S400	400	15	85	50m	50m	3 0	1 5m	125	2.0	20			12u		150	125	5.0	TO48
101#	BTX74-400	400	15	85	50m	50m	3 0	1 5m	125	2.0	20	1.4u	10	20u	200	150	125	5.0	TO48
102#	BTX74S400	400	15	85	50m	50m	3 0	1.5m	125	2 0	20	1 4u	10	12u	200	150	125	5 0	TO48
103	B15005	400	15 8	80C	25m	25m	2 0	1 5m	100C	1.6		1 8u	2.0	25u	20 §	200 §		800mt	M505
104	B16005	400	15.8	80C	25m	25m	2 0	1 5m	100C	1.6		1.8u	2.0	25u	20 §	200 §		800mt	M504
105	B17005	400	15 8	80C	25m	25m	2.0	1.5m	100C	1 6		1.8u	2.0	25u	20 §	200 §		800mt	S308
106	B18005	400	15.8	80C	25m	25m	2 0	1 5m	100C	1 6		1.8u	2 0	25u	20 §	200 §		800mt	
107	B19005	400	15.8	80C	25m	25m	2 0	1.5m	100C	1.6		1.8u	2.0	25u	20 §	200 §		800mt	
108▼	S4025	400	15.8	80C	25m	25m	2 0	1 0m	100C	1.6	100	1.8u	2.0	25u§	20 §	225 §	125A	800mt	M606
109▼	S4025C	400	15.8	80C	25m	25m	2 0	1 0m	100C	1.6	100	1.8u	2.0	25u§	20 §	225 §	125A	800mt	M607
110▼	S4025D	400	15 8	80C	25m	25m	2 0	1 0m	100C	1.6	100	1.8u	2 0	25u§	20 §	225 §	125A	800mt	S362

SYMBOLS AND CODES EXPLAINED IN INTERPRETER

6. SILICON CONTROLLED RECTIFIERS

IN ORDER OF (1) PEAK REV. VOLT., (2) MAX. CONT. CUR., (3) TEMPERATURE, (4) TYPE No.

LINE No	4 TYPE No	1 PRV and VBO (V)	MAX. CONT. CURRENT 2 Idc (A)	3 at TEMP (°C)	MAX HOLD CUR Ih @ 25°C (A)	MAX. GATE FIRING SPEC at 25°C Igf (A)	Vgf (V)	MAX SAT I Ir@PRV and Is@VBO (A)	at TEMP (°C)	MAX. FWD. VOLT. DROP at 25°C Vf (V)	@ If (A)	SWITCHING TIME at 25°C Ton (s)	for If (A)	Toff (s)	MIN. dV/dt @ 25°C (V/us)	ABS. MAX. RATINGS 1Cy PK SURGE I@25°C (A)	MAX TEMP (°C)	MAX GATE POWER (W)	DWG. No.
1▼	S4025G	400	15 8	80C	25m	25m	2 0	1 0m	100C	1.6	100	1 8u	2 0	25u§	20 §	225 §	125A	800m†	M605
2▼	S4025H	400	15.8	80C	25m	25m	2 0	1 0m	100C	1.6	100	1 8u	2 0	25u§	20 §	225 §	125A	800m†	S361
3#	BTY91	400	16	25A	10m§	25m§	3 0	4 0mØ	125J	86	16	4 5u§	50	20u§		140	125A	5 0	S98
4#	TR4	400	16	25A	50mØ	80m	3 0	3 0m	125J	2.0	50	2.0u§	10	50u§	50 Ø	250		240m	S313
5#	TR4015S	400	16	25A	100mØ	80m	3 0	5.0m	125J	2 5	50	2 0u§	10	20u§	200 §	250		240m	S313
6#	TRA24	400	16	25A	50mØ	80m	3 0	3 0m	110J	2.0	50	2 0u§	10	50u§	50 Ø§	250		240m	M94g
7#	TRA24D	400	16	25A	50mØ	80m	3 0	3 0m	110J	2.0	50	2 0u§	10	50u§	50 Ø§	250		240m	S131
8#	SF10G11	400	16	26		80m	3 5	8 0m	100C	3.0	50					113	100J	500m	S18
9♦#	BStC0326	400	16	59C	30m	30m	2 5	3.0	125J	1 9	27				200	180 §	125	10	
10	2N688	400	16 △	65C		80m$	3 0 $	4 0mØ	125C	2 0 Ø	16					150 *	125C	50	TO48
11	JAN2N688	400	16 △	65C	50m	80m	3.0	2 0m	25	2.0 †	50	5 0u	10	30u		150	125A	.5 †	TO48
12	10RC40	400 ⊠	16 △	65C	10mØ	40m	3 0	4 0mØ	105C	2.3 †	31					125 △	105J	50 †	TO48
13	RTT0240	400	16	65C	200m	50m	3 0	2 0m	100	2.5	50	20u	16		100	150	100C		TO48
14	RTT0340	400	16	65C	50m	25m	2 0	1 0m	100	2 0	50	.20u	16		100	150	100C		TO48
15	RTT0540	400	16	65C	200m	50m	3 0	2 0m	125	2.5	50	.20u	16		100	150	125C		TO48
16	RTT0640	400	16	65C	50m	25m	2 0	1 0m	125	2.0	50	20u	16		100	150	125C		TO48
17	RTU0240	400	16	65C	.20	50m	3 0	2.0m	100	2.5	50	200n	16		100	150	100C		S131
18	RTU0340	400	16	65C	50m	25m	2 0	1 0m	100	2.0	50	200n	16		100	150	100C		S131
19	RTU0540	400	16	65C	20	50m	3 0	2.0m	125	2 5	50	200n	16		100	150	125C		S131
20	RTU0640	400	16	65C	50m	25m	2 0	1 0m	125	2.0	50	200n	16		100	150	125C		S131
21	2N3653	400	16	70	350m$	500m$	4 5	4.0m	120				100	15u	200	180 *	120C	1.0	TO48
22	2N3658	400	16	70	350m$	500m$	4 5	4 0m	120				100	10u	200	180 *	120C	1.0	TO48
23	MCR3818-6	400	16	70C	50m	40m	1 5			1.2	20	1.0u	20	15u	50 Ø§	240 §	100J	500m†	M94b
24	MCR3918-6	400	16	70C	50m	40m	1 5			1.2	20	1 0u	20	15u	50 Ø§	240 §	100J	500m†	S131k
25#	BTY91/400R	400	16	75B	10mØ§	40m	3 0	8.0m	125J	2.0	50	3 0u§	10	20u§	100	136	125J	5.0	TO48
26#	11RC40	400	16 △	85B	20m	40m	3 0	4 0m		2.3	10	3.0u	10	25u	20	125	125A	5 0 Ø	S141c
27♦#	BStD0326	400	16	85C	30m	30m	2 5	3 0	125J	1 6	33				200	250 §	125	10	
28	C36D	400	16 △	100	20mØ	50m	3 5	4 0m	100J	1 2		4 5u⊠	10	20u		125	100B	50	S18
29▼	HEPR1307-RT	400	16	100J	10mØ§	10m§										250 §	100		S131r
30	16C40	400	16	125J	50m	15m	2 0	10m	125J	2.0	50	7.0u	16	75u§		150	125J	5.0 Ø	TO48#△
31	16C40B	400	16	125J	50m	40m	2 0	10m	125J	2 0	50	7 0u	16	75u§	25	150	125J	5.0 Ø	TO48#△
32	16C40C	400	16	125J	50m	40m	2 0	10m	125J	2.0	50	7.0u	16	75u§		150	125J	5.0 Ø	TO48#△
33#	CR16-402B	400 †	16	125C	120m	40m	3 0	5 0m	125C	2.0	16	2.0u	10	20u	20		125C	1 0	TO48
34#	T14F400C	400	17	85C	120m	50m	3 0	10m	125J	2 5	50	1.5u⊠	10	15u§	200 §	200 §	125J		S63g%
35#	T14F400E	400	17	85C	120m	50m	3 0	10m	125J	2.5	50	1.5u⊠	10	15u§	200 §	200 §	125J		M329%
36	2N688A	400	18 △	65C	50m$⊠	40m	3 0 $	1 0mØ	65C	2 1 †	18				100	250 *	125C	5 †	TO48
37	TIX94	400	18	75C	40m	40m	3 5	1 0m	125	1 6	18				100		125C	5 Ø	M246
38#	12RCM40	400	18 8	65B	65m	85m	3 0	5.0m	105	2.2	12			20u	20	150	105	50	TO48
39#	T15N400C	400	19	85C	200m	100m	3 0	10m	125J	2 5	50	2.5u⊠	10	80u§	20 §	300 §	125J		S63g%
40#	T15N400E	400	19	85C	200m	100m	3 0	10m	125J	2.5	50	2.5u⊠	10	80u§	20 §	300 §	125J		M351%
41#	CS16-04	400	19	95	50m	80m	3 0	3.0m	125	1.8	60			60u	200	350	125	10	
42#	BTX12/400R	400	20	25$	40m§	50m	3 0			3 5 §	175	4 0u§	10	10u§	20 §	250	125J	5.0	S182
43#	CR20A8	400	20	57C		50m	3 0	3 0m	100J	1 8	60					300 △	100J	5.0 Ø	S106b
44#	2SF298	400	20	58C	10mØ	50m	3 5	3 0mØ	100	1 3	20					300	100J	5 Ø	S106b
45#	2SF298A	400	20	58C	10mØ	50m	3 5	3 0mØ	100	1 3	20		20	15u⊠	100 △	300	100	5 0 Ø	S106b
46#	TAG20-400	400	20	60	50m	50m	3 0	1 5m	105	1.7	30					175	105	5.0	TO48
47#	TAG20S400	400	20	60	50m	50m	3 0	1.5m	105	1.7	30			12u		175	105	5.0	TO48
48	MCR649-6	400 ⊠	20	65C		80m	3.5	5.0m△	100	70 Ø	13 §					260 △	100J	5 Ø	TO41
49#	BTX33-400	400	20	70	50m	50m	3.0	1 5m	125	1.7	30					175	125	5.0	TO48
50#	BTX33S400	400	20	70	50m	50m	3 0	1 5m	125	1 7	30			12u		175	125	5 0	TO48
51#	CR20EY8	400	20	74C		50m	3.0	6.0m	125J	2.5	60		20	15u⊠	100 △	300 △	125J	5.0 Ø	S106b
52#	6TW4	400	20	75C$	25m	50m	2 0	10m	100J	1 8 §	50	2 5u§	20	20u§		300	150S	2.0	
53#	CR16-401B	400 †	20	75C	120m	40m	3 0	5 0m	125C	2 0	16	2 0u	10	30u			125C	1 0	TO48
54#	CR16-402AB	400	20	75C	7.0mØ	60m	3 0	10m	125C	2.0	50	2.5u	50	20u⊠	20	160	125	5.0 Ø	
55#	CR16-402BB	400	20	75C	7.0mØ	60m	3 0	10m	125C	2.0	50	2 5u	50	15u⊠	20	160	125	5.0 Ø	
56#	CR16-402CB	400	20	75C	7.0mØ	60m	3 0	10m	125C	2 0	50	2 5u	50	12u⊠	20	160	125	5 0 Ø	
57#	CR16-402DB	400	20	75C	7.0mØ	60m	3 0	10m	125C	2 0	50	2 5u	50	8.0u⊠	20	160	125	5.0 Ø	
58#	CR16-402EB	400	20	75C	7 0mØ	60m	3 0	10m	125C	2.0	50	2 5u	50	6.0u⊠	20	160	125	5.0 Ø	
59#	CR16-4029B	400	20	75C	7.0mØ	60m	3.0	10m	125C	2 0	50	2 5u	50	4 0u⊠	20	160	125	5 0 Ø	
60#	BTX81-400R	400	20	85B	100m	80m	3 5			1 8	50						125J	1.0 †	S94a
61	TCR402	400	22	25C	25mØ§	50m	3 0	3 0mØ	100C	820mØ	20 §	7.5u		12u		150	125C	500m	S148
62#	2SF38A	400 ⊠	22	64B		40m	3.0	8.0m	125J	2 0	50					150	125J	.50	S106a
63#	2SF764	400	22	64B		40m	3 0	4 5m	125J	2.0	50		10	10u	20	150	125	.50	S18d
64#	2SF764A	400	22	64B		40m	3.0	4 5m	125J	2 0	50		10	5 0u	20	150	125	.50	S18d
65	2N3872	400	22	65		80m	3 0	3 0m	100	1.9 †	69					350	100		M94
66	2N3898	400	22	65		80m	3 0	3 0m	100	1.9 †	69					350	100		S131
67	B15025	400	22	80C	40m	25m	2 0	1 5m	100C	1 6		1 8u	2.0	25u	20 §	300 §		800m†	M505
68	B16025	400	22	80C	40m	25m	2 0	1 5m	100C	1 6		1.8u	2 0	25u	20 §	300 §		800m†	M504
69	B17025	400	22	80C	40m	25m	2.0	1 5m	100C	1 6		1.8u	2 0	25u	20 §	300 §		800m†	S308
70	B18025	400	22	80C	40m	25m	2 0	1 5m	100C	1 6		1 8u	2.0	25u	20 §	300 §		800m†	
71	B19025	400	22	80C	40m	25m	2 0	1 5m	100C	1.6		1.8u	2 0	25u	20 §	300 §		800m†	
72▼	S4035	400	22	80C	40m	25m	2 0	1 0m	100C	1.6	141	1 8u	2 0	25u§	20 §	325 §	125A	800m†	M606
73▼	S4035C	400	22	80C	40m	25m	2 0	1.0m	100C	1 6	141	1.8u	2 0	25u§	20 §	325 §	125A	800m†	M607
74▼	S4035D	400	22	80C	40m	25m	2 0	1 0m	100C	1.6	141	1.8u	2.0	25u§	20 §	325 §	125A	800m†	S362
75▼	S4035G	400	22	80C	40m	25m	2 0	1.0m	100C	1.6	141	1 8u	2.0	25u§	20 §	325 §	125A	800m†	M605
76▼	S4035H	400	22	80C	40m	25m	2 0	1.0m	100C	1 6	141	1 8u	2 0	25u§	20 §	325 §	125A	800m†	S361
77#	TS435	400	22.5	25A	20mØ	80m	3.0	6.0m	125J	2.2	70	5.0u§	15	50u§	50 Ø§	250		240m	S313
78#	CR18-503RB	400	23	70C	28mØ	40m	3 0	5.0m†	125C	2.1	57	2.3u	20	85u	20	180	125	5.0	
79#	CR18-503RBA	400	23	70C	28mØ	40m	3.0	5 0m†	125C	2.1	57	2 3u	20	85u	200	180	125	5 0	
80#	T18F400C	400	23	85C	120m	50m	3 0	10m	125J	2.3	60	1.5u⊠	15	20u§	50 §	300 §	125J		S63g%
81#	T18F400E	400	23	85C	120m	50m	3 0	10m	125J	2.3	60	1 5u⊠	15	20u§	50 §	300 §	125J		M353%
82	MCR1718-6	400 △	25	$	6 0mØ	50m	7 0			1 3	25				100 Ø	100	125J	1 0 †	TO48
83#	2SF137	400	25	25C		50m	3 0	4.0m	125C	1 2 △	12					150	125	5 Ø	S94
84	C37D△	400	25 △	25C		80m	3 5	8 0m	105	2 3	30					125	105C	.50	TO48
85	10RC40A	400 ⊠	25 △	45C	10mØ	90m	2 5	4 0mØ	125C	2 8	50 †	3 0u	10	30u	25 §	200 △	125J	.50 †	TO48
86	10RCF40A	400 ⊠	25 △	45C	10mØ	90m	2 5	4 0mØ	125C	2.8	50 †	3 0u	10	12u§	25 §	200 △	125J	500m†	TO48
87#	SF16G11	400	25	57		40m	3.0	8 0m	125C	1 9	50					135	125J	500m	S18
88#	2N688AS	400	25	60	50m	40m	3 0	1 5m	125	1 7	30	1.4u	10	12u	100	200	125	5.0	TO48
89#	2N688S	400	25	60	50m	40m	3 0	1 5m	125	1 7	30	1 4u	10	12u	25	200	125	5 0	TO48
90#	BTX73-400	400	25	60C	50m	50m	3.0	1 5m	125	1.7	30	1.4u	10	20u	200 §	200	125J	5.0 Ø	TO48
91#	BTX73S400	400	25	60	50m	50m	3 0	1 5m	125	1 7	30	1 4u	10	12u	200	200	125	5 0	TO48
92	TI3041	400 †	25 △	60C	130mØ	100m	4 0	3 0m	125C	2.5	25	2 5u	25	2.9u	200	200	125C	5 Ø	TO48
93	C30D	400	25 △	70C	50m	25m	1 5	1 7m	100J	1 5	50					250	100J	.50	S131
94	C31D	400	25 △	70C	50m	9 0m	1 5	1 7m	100J	1 5	50					250	100J	.50	S131
95	C32D	400	25 △	70C	50m	25m	1.5	1.7m	100J	1 5	50					250	100J	.50	M94
96	C33D	400	25 △	70C	50m	9 0m	1.5	1.7m	100J	1 5	50					250	100J	.50	M94
97	C34D1	400	25	70	50m	25m	1 5	1 0m	100	1 5	50		35	20u⊠	20	250	100J	5.0 Ø	M94
98	C34D2	400	25	70	50m	25m	1 5	1 0m	100	1 5	50		35	20u⊠	20	250	100J	5.0 Ø	S131
99#	21RC40	400	25 △	75B	20m	40m	3 0	4 0m		2.2	16	3 0u	10	25u	20	150	125A	5.0 Ø	S141c
100#	CS22-04	400	25	75	200m	100m	3 0	10m	125	2 1	70			80u	200	400	125	75	
101	2N5807	400	25	80	100m$	120m$	4 0 $			1 6	35					200 §	115C	500m†	S18
102#	24TB4	400	25	84B		10	3.0	7 5m		2 3	31					180	125	1.0	S266
103#	26TB4	400	25	84B		10	3 0	7 5m		2 3	31					180	125	1 0	S63a
104	2N2578	400	25	85C		80m$	3 5 $	2 5mØ	125C	70 §	16					260 §	125C	.50	TO41
105	MCR1907-6	400 △	25	125J	12m	30m	1 5	4.0m	125J	1 7	20	50u	10	12u⊠	30 §	150	125J	5 †	TO48
106#	BTX82-400R	400	26	87B	10	80	3 5					5.0		50u		550 *	125J	5 0 Ø	TO48
107#	T22N400C	400	28	85C	200m	100m	3 0	10m	125J	1 9	60	2.5u⊠	20	80u§	20 §	400 §	125J		S63g%
108#	T22N400E	400	28	85C	200m	100m	3 0	10m	125J	1 9	60	2 5u⊠	20	80u§	20 §	400 §	125J		M353%
109#	BTX13/400R	400	30	25$	40m§	50m	3 0			3 5 §	250	4 0u§	10	6.0u§	20 §	300	125J	5.0	S189
110#	CR30-04	400	30	50	20	2 0	10		125	1 8	100	4.5u	30	25u	20	350	125	5.0	S314

SYMBOLS AND CODES EXPLAINED IN INTERPRETER

6. SILICON CONTROLLED RECTIFIERS

IN ORDER OF (1) PEAK REV. VOLT., (2) MAX. CONT. CUR., (3) TEMPERATURE, (4) TYPE No.

LINE No	4 TYPE No.	1 PRV and VBO (V)	MAX. CONT. CURRENT 2 Idc (A)	3 at TEMP (°C)	MAX. HOLD. CUR Ih @ 25°C (A)	MAX. GATE FIRING SPEC at 25°C Igf (A)	Vgf (V)	MAX SAT I Ir@PRV and Is@VBO (A)	at TEMP (°C)	MAX. FWD. VOLT. DROP at 25°C Vf (V)	@ If (A)	SWITCHING TIME at 25°C Ton (s)	for If (A)	Toff (s)	MIN. dV/dt @ 25°C (V/us)	ABS. MAX RATINGS 1Cy PK SURGE I@25°C (A)	MAX TEMP (°C)	MAX GATE POWER (W)	DWG. No.
1#	23TB4	400	31	82B	150m	100m	3 0	7 5m		2 4	63					260	125C	1.0	S266
2#	25TB4	400	31	82B	150m	100m	3.0	7.5m		2 4	63					260	125C	1.0	S63a
3#	CR25-401B	400	32	25	26m	40m	3 0					2 5u	25	150u		210	125	5 0	TO48
4#	8TW4	400	32	75C$	25m	50m	2 0	10m	100J	1 8 §	90	2 5u§	32	20u§		550	150S	2 0	
5#	BTX66/400R	400	32	85B	10mØ§	80m	3 0	8 0m	125J	3 3	500	50u	50	15u	27	680 *	125J	1 †	TO94
6	C40D△	400	35 △	18B	100m	40m	3 0	4.0m△	25J	2 0 △	50			12u		150	125J	5 0	TO48
7	SCR164A	400 ⧄	35	25C	50m	25m	2 0	4 0m△	125C	2 0	50	1 0u§	200	20u§		200 §	125J	15	TO48
8	SCRF164A	400 ⧄	35	25C	100m	25m	2 0	4 0m△	125C	2 0	50	20u§	10	6 0u§		200 §	125J	15	TO48
9	SCRF1640	400 ⧄	35	25C	100m	40m	3 0	4.0m△	125C	2 0	50	2.0u§	10	12u§		200 §	125J	15	TO48
10	16RC40A	400 ⧄	35 △	35C	20mØ	40m	2 0	4 0mØ	125C	2 3	70 †		10	75u§	25 §	250 △	125J	.50 †	TO48
11	16RCF40A	400 ⧄	35 △	35C	20mØ	40m	2 0	1 0mØ	125C	2 3	70 †		10	12u§	25 §	250 △	125	50 †	TO48
12	18RC40	400 ⧄	35 △	45C	20mØ	40m	2 0	4 0mØ	125C	2.0	70 †					350 △	125J	.50 †	TO48
13	MCR3835-6	400	35	47C	50m	40m	1 5			1 2	35	1 0u	35	15u	50 Ø§	325 §	100J	500m	M94b
14	MCR3935-6	400	35	47C	50m	40m	1 5			1 2	35	1 0u	35	15u	50 Ø§	325 §	100J	500m	S131k
15	C38D△	400 ⧄	35	56C	80m	40m	3 0	4 0m	25J	2 0 △	50	1 4u	5 0	24u	20	150	150C	12	TO48
16	40682	400	35 △	60C	70m	40m	2 0			25	300	2 0u	30	20u	10	300	100C	500m†	S304
17	NL570D	400	35	62	100m	80m	3 0			1 7	50	1 4u	5 0	30u	200	600	125	500m	
18	22RC40	400 ⧄	35 △	70C	20mØ	40m	2 0	4 0mØ	150C	2 3	70 †				20	225 △	150J	500m†	TO48
19#	TK4FA	400	35	85C		300m	3 0	10m	125J	2 0	100	3.0u§	100	20u§	100 §	700		900m	S317
20#	TK4FB	400	35	85C		300m	3 0	10m	125J	2 0	100	3 0u§	100	40u§	100 §	700		900m	S317
21	C38D⧄	400	35	87C	80m	40m	2.5	2.0m	150J	2.0 †	50	1.4u	5 0	24 §	20	200	150J	.50 †	TO48
22	NLC38D	400	35	90C	80m	40m	2 5	2 0m	150J	2 0	50	1 4u	5 0	24u	20	200	150J	50 †	TO48
23▼	HEPR1475-RT	400	35	100J	10mØ§	10m§										325 §	100		S131r
24▼#	5TCA40	400	35	125	60	100m	3 0							100u	100 §	1 5k	125	10	
25	35C40	400	35	125J	200m§	200m	3 0	10m	125J	2.5	220	10u	35	40u§		900	125J	15 Ø	TO94#△
26	35C40B	400	35	125J	200m§	200m	3 0	10m	125J	2 5	220	10u	35	40u§	100	900	125J	15 Ø	TO94#△
27	35C40BF	400	35	125J	200m§	200m	3 0	10m	125J	2 5	220	10u	35	40u§	100	900	125J	15 Ø	TO83#△
28	35C40F	400	35	125J	200m§	200m	3 0	10m	125J	2.5	220	10u	35	40u§		900	125J	15 Ø	TO83#△
29#	CR30-403A	400	36	25	66m	60m	3 0			1 4	30	20u	30	73u		500	125	5 0	TO49
30#	CR30-404A	400	36	25	66m	60m	3 0			1.4	30		30	20u		500	125	5 0	TO49
31#	CR30-504AA	400	38	70C	20mØ	80m	3 0	10m†	125C	2 5	100	20u	100	20u⧄	20	660	125	5 0 Ø	TO49
32#	CR30-504BA	400	38	70C	20mØ	80m	3 0	10m†	125C	2 5	100	20u	100	15u⧄	20	660	125	5 0 Ø	TO49
33#	CR30-504CA	400	38	70C	20mØ	80m	3 0	10m†	125C	2 5	100	20u	100	12u⧄	20	660	125	5 0 Ø	TO49
34#	CR30-504DA	400	38	70C	20mØ	80m	3 0	10m†	125C	2 5	100	20u	100	8 0u⧄	20	660	125	5 0 Ø	TO49
35▼#	6TC40	400	40			100m	3 0			1 3		10u		150u	50 §Ø	1.5k*	125J		S183a
36#	ATS40	400	40	25		100m	2 0												
37#	2SF734	400	40	70B		40m	3 0	7 0m	125J	1 7	50				100	300	125J	500m	S18c
38#	27TB4	400	40	74B		10	3 0	15m		2 1	78					450	125C	1 0	S63a
39#	CR24-503RB	400	40	80C	28mØ	40m	3 0	5.0m†	125C	1 4	50	2 3u	20	85u	20	320	125	5 0	
40#	CR24-503RBA	400	40	80C	28mØ	40m	3 0	5 0m†	125C	1 4	50	2 3u	20	85u	200	320	125	5 0	
41#	T30F400C	400	40	85C	300m	100m	3 0	10m	125J	1 8	100	2 0u⧄	25	25u§	50 §	800 §	125J		S63g%
42#	T30F400E	400	40	85C	300m	100m	3 0	10m	125J	1 8	100	2 0u⧄	25	25u§	50 §	800 §	125J		M351%
43♦	40RCS40	400 ⧄	40	87C	200m	110m	3 0	2 0m	105J	1 7 †	40	4 5u	10		25 §	1 0k§	105J	500m†	S363
44▼#	6TCA40	400	40	125	60	100m	3 0							100u	100 §	1 5k	125	10	
45	251H	400	40	125J		100m	3 0	15m	125J	1 7	50	4 0u	50	100u	300	1 2k*	125J	3 †	Z59
46▼#	SKT45-04AT	400	45	85C	130m	100m	3 0			1 8	50			20u⧄	50 §Ø	800	130A	300m	S354
47▼#	SKT45-04BS	400	45	85C	130m	100m	3 0			1 8	50			15u⧄	50 §	800	130A	300m	S354
48▼#	SKT45-04BT	400	45	85C	130m	100m	3 0			1 8	50			20u⧄	50 §Ø	800	130A	300m	S354
49▼#	SKT45-04CS	400	45	85C	130m	100m	3.0			1 8	50			15u⧄	200 §	800	130A	300m	S354
50▼#	SKT45-04CT	400	45	85C	130m	100m	3 0			1 8	50			20u⧄	200 §	800	130A	300m	S354
51▼#	SKT45-04DS	400	45	85C	130m	100m	3.0			1 8	50			15u⧄	500 §	800	130A	300m	S354
52▼#	SKT45-04DT	400	45	85C	130m	100m	3 0			1 8	50			20u⧄	500 §	800	130A	300m	S354
53▼#	SKT45-04ET	400	45	85C	130m	100m	3 0			1 8	50			20u⧄	1.0k§	800	130A	300m	S354
54▼#	T130N400	400	45	85C	200m	150m	1 4	30m	125J	1 8	500	7 5u	100	60u	50	3 5k§	125J		M330d
55	NLE45D	400	45	89C	10	70	2 5	4 0m	125J	3 0	500	5 0u	50	30u	200	1 2k	125J	50 †	TO83
56	NLE46D	400	45	89C	10	70	2 5	4 0m	125J	3 0	500	5 0u	50	30u	200	1 2k	125J	50 †	TO94
57▼#	SKT46-04A	400	45	105C	130m	100m	3 0			1 8	50			50u	50 §Ø	800	150A	300m	S354
58▼#	SKT46-04B	400	45	105C	130m	100m	3 0			1 8	50			50u	50 §	800	150A	300m	S354
59▼#	SKT46-04C	400	45	105C	130m	100m	3 0			1 8	50			50u	200 §	800	150A	300m	S354
60▼#	SKT46-04D	400	45	105C	130m	100m	3 0			1 8	50			50u	500 §	800	150A	300m	S354
61▼#	SKT46-04E	400	45	105C	130m	100m	3 0			1 8	50			50u	1 0k§	800	150A	300m	S354
62#	28TB4	400	47	73B		10	3 0	15m		1 9	95					550	125	1 0	S63a
63#	BTY95-400R	400	50		10m§	40m§	3 0 §	8.0m	125J	3.5 §	500 §	3.0u§	50	20u§	10 §	680	125J	500m†	TO49
64#	CR50-04	400	50	50	20	2 0	10		125	1 8	150	4 5u	50	25u	20	650	125	5 0	S142a
65#	2SF1128	400	50	65		100m	3 0	10m	125J	2 3	300		30	30	100	700	125J	500m	S331
66#	BTY95/400R	400	50	75B	10mØ§	80m	3 0	8.0m	125J	3 3	500	3.0u	50	20u	10	680	125J	5 0	TO48
67	C145D	400	55 △			100m	3 0										125A		S236
68	C146D	400	55 △			100m	3 0							40u⧄			125A		S236
69	C147D	400	55 △			100m	3 0							10u⧄			125A		S236
70#	TK4	400	55	60C	100m	125m	3 0	10m		2 0	100	5 0u	50	30u	20 Ø	700	100C	50	TO49
71#	2SF118	400 ⧄	55	68B		100m	3 5	16m	100J	2 7	500					700	100J	50	S189d
72#	2SF774	400	55	68B		100m	3 5	16m	100J	2 7	500		30	30u	20	700	100	50	S189d
73#	2SF774A	400	55	68B		100m	3 5	16m	100J	2.7	500		30	15u	20	700	100	50	S189d
74#	29TB4	400	55	68B		10	3 0	15m		1 8	110					650	125	1 0	S63a
75	NL576D	400	55	82	500m	150m	3 0			2 4	110				50	700	125	2 0	
76	NL577D	400	55	82C	50	15	2 5	6 0m	125J	2 4	110				200	700	125J	2 0 †	TO103
77	C45D△	400	55 △	85C	100m	75m	3 0	8 0m	120C	3 1 △	500	5 0u	50	30u§	20 §	700	125J	500m	S315
78	C46D△	400	55 △	85C	100m	75m	3 0	8 0m	120C	3 1 △	500	5.0u	50	30u§	20 §	700	125J	500m	TO94
79	2191H	400	55	94C		200m	3 0	10m	125J	2 0 §	50	3 5u	50	15u	100	1.2k*	125J	3 †	Z59
80	2192H	400	55	94C		200m	3 0	10m	125J	2 0 §	50	8 0u	50	20u	100	1 2k*	125J	3 †	Z59
81	555D	400	55	99C		150m	3 0								200		125J		TO49
82	556D	400	55	99C		150m	3 0								200		125J		TO83
83#	5TC40	400	55	125	20m	45m	3 0			1 3	50	5 0u	50	25u		500	100J	20	S185
84#	BTX67/400R	400	62	85B	10mØ			80m	125J	2 5	500	50u	50	15u	27	900	125J	1 †	TO94
85#	T50F400	400	62 5	85C	300m	100m	3 0	20m	125J	2 2	160	2 0u⧄	25	30u§	50 §	800 §	125J		M330b%
86#	T50N400	400	62 5	85C	300m	100m	3 0	20m	125J	2 2	160	2 5u⧄	25	80u§	20 §	800 §	125J		M330b%
87	2515H	400	63	120C		10	3 0	15m	150J	1 7	50				300	1 2k	150J		TO83
88#	CR50-403A	400	64	25	73m	100m	3 0									600	125	5 0	TO49
89#	CR50-404A	400	64	25	73m	100m	3.0					5 5u	50	20u		600	125	5 0	TO49
90#	40T5	400	65	75B	200m	200m	25	10m†		2 1 †	200					1 1k	125B	1 0	M308
91#	CR50-504AA	400	66	75C	32mØ	60m	3 0	10m†	125C	1 7	150	5 5u	150	20u⧄	20	760	125	5.0 Ø	TO49
92#	CR50-504BA	400	66	75C	32mØ	60m	3 0	10m†	125C	1 7	150	5 5	150	15u⧄	20	760	125	5.0 Ø	TO49
93#	CR50-504CA	400	66	75C	32mØ	60m	3 0	10m†	125C	1 7	150	5 5	150	12u⧄	20	760	125	5.0 Ø	TO49
94#	CR50-504DA	400	66	75C	32mØ	60m	3 0	10m†	125C	1.7	150	5 5	150	8 0u⧄	20	760	125	5.0 Ø	TO49
95#	CR50-504LA	400	66	75C	32mØ	60m	3 0	10m†	125C	1 7	150	5 5u	150	25u⧄	20	760	125	5.0 Ø	TO49
96	2N1916	400	70 △	62C		130m$	3.0 $	4 0mØ	62C	1.9 †	70					1 0k*	125C	50	TO49
97#	CR70B8	400	70	74C		70m	3 0	6 0m	125J	1 7	220				10 △	1 5k△	125J	5.0 Ø	S189d
98#	36TB4	400	70	75B		15	3 0	15m		2 0	140					760	125	1.0	S63d
99	2N4363	400	70	82C	200m	250m$	5 0 $	10m	125C	2 0 †	70				100	1 6k*§	125C	15 Ø	TO94
100	2N4373	400	70	82C	200m	250m$	5 0 $	10m	125C	2 0 †	70				100	1 6k*§	125C	15 Ø	TO83
101#	CR70C8	400	70	83C		100m	3 0	15m	125J	1 8	220 §				100 △	1 5k△	125J	5 0 Ø	S332
102#	CR70CX8	400	70	83C		100m	3 0	15m	125J	1 8 †	220			30 §	100 §	1 5k	125J	5 0 Ø	S237f
103#	CR70CY8	400	70	83C		100m	3 0	15m	125J	1 8 †	220			15 §	100 §	1.5k	125J	5 0 Ø	S237f
104	2N2030	400	70 △	85C		150m$	3 0 $	4 0mØ	85C	1 9 †	70					1 0k*	150C	50	TO49
105#	BTY99/400R	400	70	85B	10mØ§	70m	3 0	8 0m	125J	2 5	500	3 0u	50	20u	10	900	125J	5 0	TO49
106▼#	SKT70-04AU	400	70	85C	150m	150m	3 0			1 8	60			25u⧄	50 §Ø	1 7k	130A	500m	S260c
107▼#	SKT70-04BT	400	70	85C	150m	150m	3 0			1 8	60			20u⧄	50 §	1 7k	130A	500m	S260c
108▼#	SKT70-04BU	400	70	85C	150m	150m	3 0			1 8	60			25u⧄	50 §	1 7k	130A	500m	S260c
109▼#	SKT70-04CT	400	70	85C	150m	150m	3 0			1 8	60			20u⧄	200 §	1 7k	130A	500m	S260c
110▼#	SKT70-04CU	400	70	85C	150m	150m	3 0			1 8	60			25u⧄	200 §	1 7k	130A	500m	S260c

SYMBOLS AND CODES EXPLAINED IN INTERPRETER

6. SILICON CONTROLLED RECTIFIERS

IN ORDER OF (1) PEAK REV. VOLT., (2) MAX. CONT. CUR., (3) TEMPERATURE, (4) TYPE No.

LINE No.	4 TYPE No.	1 PRV and VBO (V)	MAX. CONT. CURRENT 2 Idc (A)	3 at TEMP (°C)	MAX. HOLD. CUR Ih @ 25°C (A)	MAX GATE FIRING SPEC at 25°C Igf (A)	Vgf (V)	MAX SAT I Ir@PRV and Is@VBO (A)	at TEMP (°C)	MAX. FWD VOLT DROP at 25°C Vf (V)	@ If (A)	SWITCHING TIME at 25°C Ton (s)	for If (A)	Toff (s)	MIN. dV/dt @ 25°C (V/us)	ABS. MAX RATINGS 1Cy PK SURGE I@25°C (A)	MAX TEMP (°C)	MAX GATE POWER (W)	DWG. No.
1▼#	SKT70-04DT	400	70	85C	150m	150m	3 0			1 8	60			20u☑	500 §	1 7k	130A	500m	S260c
2▼#	SKT70-04DU	400	70	85C	150m	150m	3 0			1 8	60			25u☑	500 §	1 7k	130A	500m	S260c
3▼#	SKT70-04EU	400	70	85C	150m	150m	3.0			1 8	60			25u☑	1.0k§	1.7k	130A	500m	S260c
4#	TK140FA	400	70	85C		300m	3 0	10m	125J	2 0	200	3 0u§	100	20u§	100 §	1 0k		900m	S317
5#	TK140FB	400	70	85C		300m	3 0	10m	125J	2 0	200	3 0u§	100	40u§	100 §	1 0k		900m	S317
6▼#	SKT71-04A	400	70	105C	150m	150m	3 0			1.8	60			70u	50 §Ø	1 7k	150A	500m	S260c
7▼#	SKT71-04B	400	70	105C	150m	150m	3 0			1 8	60			70u	50 §	1 7k	150A	500m	S260c
8▼#	SKT71-04C	400	70	105C	150m	150m	3 0			1 8	60			70u	200 §	1.7k	150A	500m	S260c
9▼#	SKT71-04D	400	70	105C	150m	150m	3 0			1 8	60			70u	500 §	1.7k	150A	500m	S260c
10▼#	SKT71-04E	400	70	105C	150m	150m	3 0			1.8	60			70u	1 0k§	1.7k	150A	500m	S260c
11▼#	10TCA40	400	70	125	100	100m	3 0							100u	100 §	1.5k	125	10	
12	70C40	400	70	125J	200m§	200m	3 0	10m	125J	1 8	220	10u	70	40u§		1 6k	125J	15 Ø	T094#△
13	70C40F	400	70	125J	200m§	200m	3 0	10m	125J	1 8	220	10u	70	40u§		1.6k	125J	15 Ø	T083#△
14#	BTY95	400	78	60B	20m	75m	3 0	4.0m	125J	1 3	50	3 0u		20u			125J	5 0	S173
15#	SF50G11	400	79 △	85C	150m	100m	3 0	8.0m	125	1.7 §	150	6.0u	50		15	1.0k	125J	5.0	S189f
16#	SH50G11	400	79	85C	150m	100m	3 0	8 0m	125J	1.7 §	150	6 0u	50	20u§	100	1.0k	125J	.50 †	S189f
17▼#	12TC40	400	80		100m	100m	3 0			1 5		10u		150u	50 §	1.5k*	125J		S183b
18#	CR31-503A	400	80	55C	38mØ	60m	3 0	10m†	125C	1.7	100	3.7u	100	130u	20	700	135J	5 0 Ø	T049
19#	CR31-504AA	400	80	55C	38mØ	60m	3 0	10m†	125C	1.7	100	5 7u	100	20u☑	20	700	135J	5.0 Ø	T049
20#	CR31-504BA	400	80	55C	38mØ	60m	3 0	10m†	125C	1.7	100	5 7	100	15u☑	20	700	135J	5 0 Ø	T049
21#	CR31-504CA	400	80	55C	38mØ	60m	3.0	10m†	125C	1.7	100	5.7	100	12u☑	20	700	135J	5.0 Ø	T049
22#	CR31-504DA	400	80	55C	38mØ	60m	3 0	10m†	125C	1.7	100	5 7u	100	8.0u☑	20	700	135J	5 0 Ø	T049
23	TCR4050	400	80	70C	25mØ	50m	3 0	4 0mØ	100C	.75 Ø	50 §	4 5u		18u		1.0k	125C	1 0	S147
24	36RC40A	400 ☑	80 △	75C	20 Ø	700m	2 5	4 0mØ	125C	2.2 †	160					850 △	125J	2.0 †	T094
25	36RCF40A	400 ☑	80 △	75C	20 Ø	700m	2 5	4 0m	125C	2.2 †	160		50	20 §		850 △	125J	2 0 †	T094
26	37RC40A	400 ☑	80 △	75C	20 Ø	700m	2 5	4 0mØ	125C	2.2 †	160					850 △	125J	2 0 †	T083
27	37RCF40A	400 ☑	80 △	75C	20 Ø	700m	2.5	4.0m	125C	2.2 †	160			20 §		850 △	125J	2.0 †	T083
28	51RCG40	400 ☑	80 △	75C	100m	150m	2 5	15mØ	125C	2 5 †	160			20u	100 §	1 2k△	125J	3 0 †	T094
29	52RCG40	400 ☑	80 △	75C	100m	150m	2 5	15mØ	125C	2.5 †	160			20u	100 §	1.2k△	125J	3 0 †	T083
30#	CR80-04	400	80	75C	60m	100m	3.0	10m	100J	1.7	250	4 5u	80	30u		800	100	5 0	S284
31#	2SF128	400 ☑	80	78B		100m	3 5	16m	125J	2.3	500					1 0k	125J	.50	S189d
32#	2SF784	400	80	78B		100m	3 5	16m	125J	2.3	500		50	30u	20	1 0k	125	50	S189d
33#	2SF784A	400	80	78B		100m	3 5	16m	125J	2.3	500		50	15u	20	1.0k	125	50	S189d
34#	51RC40	400	80 △	84B	50m	70m	2 5	4.0		2.2	50	4 5u	50	60u	20	700	125A	5 0 Ø	S237c
35▼#	12TCA40	400	80	125	100	100m	3 0							100u	100 §	1 5k	125	10	
36	250H	400	80	125J		100m	3 0	15m	125J	1.3	50	4 0u	50	100u	300	1.6k*	125J	3 †	Z59
37#	37TB4	400	85	66B		.15	3 0	15m		1.9	175					930	125	1.0	S63d
38#	CR70-501A	400 †	85	75C		100m	3.0	15m	25C	1 7	70				20	1.0k	125C	1 0	T049
39#	CR70-501C	400	85	75C		100m	3 0	30m†	125C	1.7	210				20	1.0k	125	5 0	M376
40▼#	T70N400	400	85	85C	200m	150m	5 0m	25m	125J	2.8	400	4.5u	30	50u	50	2 0k§	125J		
41▼#	SKT90-04AU	400	90	85C	150m	150m	3 0			1.6	110			25u☑	50 §Ø	2 2k	130A	500m	S260c
42▼#	SKT90-04BU	400	90	85C	150m	150m	3.0			1.6	110			25u☑	50 §	2.2k	130A	500m	S260c
43▼#	SKT90-04CU	400	90	85C	150m	150m	3 0			1.6	110			25u☑	200 §	2 2k	130A	500m	S260c
44▼#	SKT90-04DU	400	90	85C	150m	150m	3.0			1.6	110			25u☑	500 §	2.2k	130A	500m	S260c
45▼#	SKT90-04EU	400	90	85C	150m	150m	3.0			1.6	110			25u☑	1 0k§	2 2k	130A	500m	S260c
46▼#	SKT91-04A	400	90	105C	150m	150m	3.0			1 6	110			70u	50 §Ø	2.2k	150A	500m	S260c
47▼#	SKT91-04B	400	90	105C	150m	150m	3 0			1.6	110			70u	50 §	2 2k	150A	500m	S260c
48▼#	SKT91-04C	400	90	105C	150m	150m	3.0			1 6	110			70u	200 §	2 2k	150A	500m	S260c
49▼#	SKT91-04D	400	90	105C	150m	150m	3 0			1.6	110			70u	500 §	2.2k	150A	500m	S260c
50▼#	SKT91-04E	400	90	105C	150m	150m	3 0			1 6	110			70u	1.0k§	2 2k	150A	500m	S260c
51#	TT4FA	400	95	85C		500m	3 0	25m	125J	2.0	350	3.0u§	100	20u§	100 §	2 0k		1 5	S204a
52#	TT4FB	400	95	85C		500m	3 0	25m	125J	2.0	350	3.0u§	100	40u§	100 §	2 0k		1 5	S204a
53#	CR100-04	400	100	50	20	2 0	10		125	1.7	350	45u	100	25u	20	1 0k	125	5 0	S267c
54#	38TB4	400	100	62B		15	3 0	15m		1.8	205					1 0k	125	1 0	S63d
55	100C40	400	100	125J	200m	200m	2 5	25m	125J	2.0	500	10u	100	40u§		2.0k	125J	10 Ø	T093#△
56	100C40B	400	100	125J	200m	200m	2 5	25m	125J	2.0	500	10u	100	40u§	100	2 0k	125J	10 Ø	T093#△
57#	CR51-503A	400	105	55C	38mØ	60m	3.0	10m†	125C	1.6	150	3 4u	120	185u	20	760	135J	5.0	T049
58	C154D△	400	110 △		500m	500m	4.0	13m	25C	3 0 †	500 †		50	7.0u§	200 §	1 2k	125J	2 0 Ø	T094
59	C155D△	400	110 △		500m	500m	4 0	13m	25C	3 0 †	500 †		50	12u§	100 §	1 2k	125J	2.0 Ø	T094
60	C156D△	400	110 △		500m	500m	4 0	13m	25C	3.0 †	500 †		50	7.0u§	200 §	1 2k	125J	2.0 Ø	S315
61	C157D△	400	110 △		500m	500m	4.0	13m	25C	3 0 †	500 †		50	12u§	100 §	1.2k	125J	2.0 Ø	S315
62♦	JAN2N1798	400	110	60C	40m	70m	3.0	15m	125A	1 8	150	15u	50	40u		1 0k	125A	500m	T083
63♦	JAN2N1916	400	110	60C	40m	70m	3.0	15m	125A	1 8	150	15u	50	40u		1.0k	125A	500m	T049
64	2541H	400	110	60C		200m	3.0	10m	125J	1 7 §	50	3.5u	50	15u	100	1 4k*	125J	3 0 †	Z59
65	2542H	400	110	60C		200m	3 0	10m	125J	1.7 §	50	8.0u	50	20u	100	1.4k*	125J	3.0 †	Z59
66#	BTY99	400	110	60B	20m	70m	3.0	4.0m	125J	1.4	70	3.0u		20u			125J	5.0	S173
67	C55D△	400	110 △	60C	100m	75m	3 0	10m	125J	2.5	500	5 0u	50	30u§	20 §	1.0k	125J	5.0	S91
68	C56D△	400	110 △	60C	100m	75m	3 0	10m	125J	2.5	500	5 0u	50	30u§	20 §	1 0k	125J	5 0	S108
69#	TK140	400	110	60C	100m	125m	3.0	10m		2.0	200	4.5u	50	20u	40 §Ø	1.0k	125C	.50	T049
70	71RC40A	400 ☑	110 △	62C	20mØ	70m	2.5	4 0mØ	125J	1.9 †	220		50	30u§		1.0k△	125J	.5 †	T094
71	71RCF40A	400 ☑	110 △	62C	20mØ	70m	2 5	4.0mØ	125J	1.9 †	220		50	20u§	25 △	1 0k△	125J	.50 †	T094
72	72RC40A	400 ☑	110 △	62C	20mØ	70m	2.5	4.0mØ	125J	1.9 †	220		50	30u§		1.0k△	125J	5 †	T083
73	72RCF40A	400 ☑	110 △	62C	20mØ	70m	2.5	4 0mØ	125J	1 9 †	220		50	20u§	25 △	1.0k△	125J	.50 †	T083
74	71RCG40	400 ☑	110 △	75C	100m	150m	2.5	15mØ	125C	2.4 †	220			15u	100 §	1.4k△	125J	3.0 †	T094
75	72RCG40	400 ☑	110 △	75C	100m	150m	2 5	15mØ	125C	2.4 †	220			15u	100 §	1.4k△	125J	3 0 †	T083
76#	71RC40	400	110 △	79B	50m	70m	2 5	4.0m		1.9	70	4.5u	50	70u	20	1.0k	125A	5 0 Ø	S237c
77	NLE155D	400	110	83C	.50	15	2 5	8 0m	125J	3.0	500	5.0u	50	20u	200	1.4k	125J	2 0 †	T094
78	NLE157D	400	110	83C	50	15	2 5	8 0m	125J	3.0	500	5.0u	50	20u	200	1.4k	125J	2.0 †	T083
79	NLF154D	400	110	83C	500m	200m	2 5	8.0m	125J	3.0 †	500	5.0u	50	10u☑	200	1.4k	125J	2 0 †	T094
80	NLF155D	400	110	83C	500m	200m	2.5	8.0m	125J	3.0 †	500	5.0u	50	20u☑	200	1.4k	125J	2 0 †	T094
81	NLF156D	400	110	83C	500m	200m	2 5	8.0m	125J	3.0 †	500	5.0u	50	10u☑	200	1.4k	125J	2 0 †	T083
82	NLF157D	400	110	83C	500m	200m	2 5	8.0m	125J	3.0 †	500	5.0u	50	20u☑	200	1.4k	125J	2.0 †	T083
83	71RC40B	400 ☑	110 △	85C	20mØ	70m	2 5	4.0mØ	150J	2.2 †	220		50	40u§		1.0k△	150J	5 †	T094
84	72RC40B	400 ☑	110 △	85C	20mØ	70m	2 5	4.0mØ	150J	2.2 †	220		50	40u§		1.0k△	150J	.5 †	T083
85▼#	SKT110-04AV	400	110	85C	200m	200m	3.0			1.6	70			30u☑	50 §Ø	2.8k	130A	1 0	S260d
86▼#	SKT110-04BT	400	110	85C	200m	200m	3.0			1.6	70			20u☑	50 §	2.8k	130A	1.0	S260d
87▼#	SKT110-04BV	400	110	85C	200m	200m	3 0			1.6	70			30u☑	50 §	2.8k	130A	1.0	S260d
88▼#	SKT110-04CT	400	110	85C	200m	200m	3 0			1.6	70			20u☑	200 §	2.8k	130A	1 0	S260d
89▼#	SKT110-04CV	400	110	85C	200m	200m	3 0			1.6	70			30u☑	200 §	2.8k	130A	1 0	S260d
90▼#	SKT110-04DT	400	110	85C	200m	200m	3.0			1.6	70			20u☑	500 §	2.8k	130A	1.0	S260d
91▼#	SKT110-04DV	400	110	85C	200m	200m	3.0			1.6	70			30u☑	500 §	2.8k	130A	1 0	S260d
92▼#	SKT110-04EV	400	110	85C	200m	200m	3 0			1.6	70			30u☑	1 0k§	2.8k	130A	1.0	S260d
93	JAN2N2030	400	110	87C	40m	130m	3 0	15m	150C	1.6	200	5.0u☑	70	150u☑	20 △	1 0k	150A	500m†	S104b
94	C62D△	400	110 △	87C	100m	75m	3.0	15m	145C	2.5 △	1.5k	5.0u	50	50u		1 0k	150J	500m	S315
95	NLE150D	400	110	89C	.50	15	2 5	4.0m	125J	2.6	500	8 0u	50	150u	200	1 6k	125J	2 0 †	T094
96	NLE152D	400	110	89C	50	.15	2 5	4.0m	125J	2.6	500	8.0u	50	150u	200	1 6k	125J	2.0 †	T083
97	NLH150D	400	110	89C	50	.15	2.5	4 0m	125J	2 6	500	8.0u	50	150u	200	1.6k	125J	2.0 †	T094
98	NLH152D	400	110	89C	50	.15	2 5	4.0m	125J	2.6	500	8.0u	50	150u	200	1 6k	125J	2.0 †	T083
99	C60D	400	110	100C	100m	70m	2.5	4.0m	125J	2.5 †	500	5.0u	50	50u§		1.6k	150J	.5 †	T049
100	C62D☑	400	110	100C	100m	70m	2.5	8 0m	125J	2.5 †	500	5 0u	50	50u§		1 6k	150J	50 †	T083
101	NLC62D	400	110	103C	.10	70M	2.5	4.0m	150J	2.5	500	5 0u	50	50u		1 6k	150J	.50 †	T083
102▼#	SKT111-04A	400	110	105C	200m	200m	3.0			1.6	70			80u	50 §Ø	2.8k	150A	1.0	S260d
103▼#	SKT111-04B	400	110	105C	200m	200m	3.0			1.6	70			80u	50 §	2.8k	150A	1 0	S260d
104▼#	SKT111-04C	400	110	105C	200m	200m	3.0			1.6	70			80u	200 §	2 8k	150A	1 0	S260d
105▼#	SKT111-04D	400	110	105C	200m	200m	3.0			1.6	70			80u	500 §	2 8k	150A	1.0	S260d
106▼#	SKT111-04E	400	110	105C	200m	200m	3.0			1.6	70			80u	1.0k	2 8k	150A	1.0	S260d
107#	10TC40	400	110	125J	20m	60m	3.0			1.5	110	5.0u	110	25u		1 1k	125J	20	S185
108#	T95F400	400	115	85C	300m	100m	3.0	30m	125J	1.8	300	2.5u☑	50	30u§	50 §	2 0k§	125J		M330a%
109#	2SF346	400	120	25C		100m	3 0	10m	125C	1.2 △	60					1 0k	125	10 Ø	S142
110#	CR120-04	400	120	75C	60m	100m	3.0	10m	125J	2.1	370	4.5u	120	40u		1.0k	125	5.0	S284

SYMBOLS AND CODES EXPLAINED IN INTERPRETER

6. SILICON CONTROLLED RECTIFIERS

IN ORDER OF (1) PEAK REV. VOLT., (2) MAX. CONT. CUR., (3) TEMPERATURE, (4) TYPE No.

LINE No.	4 TYPE No.	1 PRV and VBO (V)	MAX. CONT. CURRENT 2 Idc (A)	3 at TEMP (°C)	MAX. HOLD. CUR Ih @ 25°C (A)	MAX. GATE FIRING SPEC at 25°C Igf (A)	Vgf (V)	MAX SAT I Ir@PRV and Is@VBO (A)	at TEMP (°C)	MAX. FWD. VOLT. DROP at 25°C Vf (V)	@ If (A)	SWITCHING TIME at 25°C Ton (s)	for If (A)	Toff (s)	MIN. dV/dt @ 25°C (V/us)	ABS. MAX. RATINGS 1Cy PK SURGE I@25°C (A)	MAX TEMP (°C)	MAX GATE POWER (W)	DWG. No.
1#	CR100-501C	400 Δ	124	80C		100m	3 0	15m	25C	1.7	100				20	1.2k	125C	1.0	M376
2#	CR100-501D	400	125	80C	30mØ	100m	3 0	30m†	125C	1 7	300			100	20	1.5k	125	5.0	TO49
3	2505H	400	125	95C		.10	3 0	15m	150J	1.3	50				300	1.6k	150J		TO83
4#	SF80G11	400	126 Δ	85C	200m	150m	3.0	15m	125	1.7 §	250	6.0u	80		15	1.6k	125J	5.0	S267b
5#	SH80G11	400	126	85C	200m	150m	3.0	15m	125	1.7 §	250	6.0u	80	20u§	100	1.6k	125J	.50 †	S267b
6#	42TB4	400	135	57B		.20	3 0	15m		2 2	265					1.4k	125	1.5	M308
7♦#	30TC40	400	140		150m	100m	3.0			1.5					50 §Ø	3.5k*	125J		S348
8▼#	SKT140-04AV	400	140	85C	200m	200m	3 0			1.6	200			30u⊠	50 §Ø	3.9k	130A	1.0	S260d
9▼#	SKT140-04BV	400	140	85C	200m	200m	3.0			1.6	200			30u⊠	50 §	3.9k	130A	1.0	S260d
10▼#	SKT140-04CV	400	140	85C	200m	200m	3 0			1 6	200			30u⊠	200 §	3.9k	130A	1.0	S260d
11▼#	SKT140-04DV	400	140	85C	200m	200m	3.0			1 6	200			30u⊠	500 §	3.9k	130A	1.0	S260d
12▼#	SKT140-04EV	400	140	85C	200m	200m	3.0			1.6	200			30u⊠	1.0k§	3.9k	130A	1.0	S260d
13▼#	SKT141-04A	400	140	105C	200m	200m	3.0			1.6	200			80u	50 §Ø	3.9k	150A	1.0	S260d
14▼#	SKT141-04B	400	140	105C	200m	200m	3 0			1 6	200			80u	50 §	3.9k	150A	1.0	S260d
15▼#	SKT141-04C	400	140	105C	200m	200m	3 0			1.6	200			80u	200 §	3.9k	150A	1.0	S260d
16▼#	SKT141-04D	400	140	105C	200m	200m	3.0			1 6	200			80u	500 §	3.9k	150A	1.0	S260d
17▼#	SKT141-04E	400	140	105C	200m	200m	3.0			1.6	200			80u	1.0k§	3.9k	150A	1 0	S260d
18▼#	20TCA40	400	140	125	150	100m	3.0							100u	100 §	3.0k	125	10	
19#	TT4	400	150	60C	300m	500m	3.0	25m	100J	2.2	350	5.0u	15		20 §Ø	2 0k	100C	1.0	S204
20	2N2507	400	150 Δ	80C	50m	150m$	3 0 $	8.0m	80C	1 4 †	150					3 5k*	125C	.20 †	TO93
21	2N2546	400	150	80C	50m§	150m§	3.0 §	7.5m	80C	1.5	150				4 0	3.5k§	125C	2.0 †	TO93
22#	CR150BX8	400	150	81C		300m	3.0	15mØ	125J	1.9	500			30u⊠	100 Δ	4 0k	125J	16 Ø	S237a
23#	CR150BY8	400	150	81C		300m	3.0	15mØ	125J	1.9	500			15u	100 Δ	4.0k	125J	16 Ø	S237a
24#	FT150BX8	400	150	81C		300m	3 0	15m	125J	1.9	500		150	30u⊠	100 Δ	4.0kΔ	125J	16 Ø	M567
25#	FT150BY8	400	150	81C		300m	3.0	15m	125J	1.9	500		150	15u⊠	100 Δ	4.0kΔ	125J	16 Ø	M567
26#	TT240FA	400	150	85C		500m	3.0	25m	125J	2 0	450	3.0u§	100	20u§	100 §	3.2k		1.5	S204a
27#	TT240FB	400	150	85C		500m	3 0	25m	125J	2.0	450	3.0u§	100	40u§	100 §	3.2k		1.5	S204a
28	150C40	400	150	125J	200m	200m	2.5	25m	125J	1.7	500	10u	150	40u§		3.0k	125J	10 Ø	TO93#Δ
29	150C40B	400	150	125J	200m	200m	2.5	25m	125J	1.7	500	10u	150	40u§	100	3.0k	125J	10 Ø	TO93#Δ
30	101RC40	400 ⊠	160 Δ	80C	50mØ	150m	2 5	8.0mØ	125J	1.7 †	314		150	25u§		2 0kΔ	125J	2 †	TO93
31▼#	SKT170-04AY	400	170	85C	200m	250m	3.0			1.6	500			45u⊠	50 §Ø	6 6k	130A	1.0	S355
32▼#	SKT170-04BV	400	170	85C	200m	250m	3 0			1.6	500			30u⊠	50 §	6.6k	130A	1.0	S355
33▼#	SKT170-04BY	400	170	85C	200m	250m	3.0			1.6	500			45u⊠	200 §	6.6k	130A	1 0	S355
34▼#	SKT170-04CV	400	170	85C	200m	250m	3.0			1.6	500			30u⊠	200 §	6.6k	130A	1 0	S355
35▼#	SKT170-04CY	400	170	85C	200m	250m	3 0			1 6	500			45u⊠	500 §	6.6k	130A	1.0	S355
36▼#	SKT170-04DV	400	170	85C	200m	250m	3.0			1.6	500			30u⊠	500 §	6.6k	130A	1.0	S355
37▼#	SKT170-04DY	400	170	85C	200m	250m	3 0			1 6	500			45u⊠	1.0k§	6.6k	130A	1.0	S355
38▼#	SKT170-04EY	400	170	85C	200m	250m	3 0			1.6	500			45u⊠	1 0k§	6.6k	130A	1.0	S355
39▼#	SKT171-04A	400	170	105C	200m	250m	3 0			1.6	500			100u	50 §Ø	6.6k	150A	1.0	S355
40▼#	SKT171-04B	400	170	105C	200m	250m	3.0			1.6	500			100u	50 §	6 6k	150A	1.0	S355
41▼#	SKT171-04C	400	170	105C	200m	250m	3 0			1 6	500			100u	200 §	6.6k	150A	1.0	S355
42▼#	SKT171-04D	400	170	105C	200m	250m	3.0			1.6	500			100u	500 §	6 6k	150A	1.0	S355
43▼#	SKT171-04E	400	170	105C	200m	250m	3.0			1 6	500			100u	1.0k§	6.6k	150A	1.0	S355
44#	43TB4	400	175	62B		.20	3 0	15m		2 2	390					1.9k	125	1.5	M308
45▼#	2SF1144	400	175	75C		300m	3.0	15m	125J	1.7 §	500				100 Δ	4.0kΔ	125J	16 Ø	S237e
46#	CR150F8	400	175	75C		300m	3.0	15m	125J	1 7 §	500				100 §	4.0k	125J	16 Ø	S237e
47#	FT150B8	400	175	75C		300m	3 0	15m	125J	1.7	500 §				100 Δ	4.0kΔ	125J	16 Ø	M567
48	2N3888	400	175	80	200m	400m	4 0	15m	125	1.8	175					4.5k	125	3.0	TO93
49	C350D	400	175	82C	50	15	2 5	8.0m	125J	2.6	500	8 0u	50	100u	200	1 8k	125J	2.0 †	
50	2201H	400	175	125J		300m	4.0	15m	125J	1 3 §	100	4 0u	100	30u	100	4 0k*	125J	3.0 †	TO93
51	2202H	400	175	125J		300m	4.0	15m	125J	1.3 §	100	8 0u	100	40u	100	4 0k*	125J	3.0 †	TO93
52▼#	T161N400	400	180	85C	300m	200m	2.0	50m	125J	1 8	500	4 0u	100	50u	50	5.2k§	125J		M330d
53#	46TB4	400	195	56B		20	3.0	15m		2.0	390					2.1k	125	1.5	M308
54#	2SF314	400 ⊠	200	62B		125m	2 5	20m	125J	2 1	1 0k					3.5k	125J	1.0	S167
55#	2SF794	400	200	62B		125m	3 0	20m	125J	2 1	1.0k		100	40u	20	3.5k	125J	1.0	S167
56#	2SF794A	400	200	62B		125m	3 0	20m	125J	2 1	1.0k		100	20u	20	3 5k	125J	1 0	S167
57	261H	400	200	80		.15	3 0	15m	125J	1 4	100				300	3.3k	125		TO93
58	2181H	400	200	80C		300m	4 0	15m	125J	1 3 §	100	4 0u	100	20u	100	3.3k*	125J	3 †	TO93
59	2182H	400	200	80C		300m	4.0	15m	125J	1 3 §	100	8 0u	100	30u	100	3.3k*	125J	3 †	TO93
60	263H	400	200	85		15	3 0	15m	125J	1 3	50				300	1.6k	125		M414
61▼#	T171F400	400	200	85C	300m	200m	2 0	50m	125J	1.8	500	7 5u	100	20u⊠	50	5 8k§	125J		M330d
62#	TT340	400	200	85C	40mØ	500m	3 0	25m	125J	1 6	600	5.0u§		100u§	100 Ø§	4.0k		1.5	S204a
63#	V2051H	400	200	90		125m	5 0	20m	125J	1.8	1 0k		200	25	100	4.0k	125J	10	M404b
64	2615H	400	200	105		15	3 0	15m	150J	1 4	100				200	3.3k	150		TO93
65▼#	30TCA40	400	200	125	150	100m	3 0								100 §	5.5k	125	10	
66#	47TB4	400	220	50B		20	3 0	15m		1 9	440					2 4k	125	1 5	M308
67#	CR153-503A	400	220	70C	35mØ	150m	3 5	30m†	125C	1 6	450				100	3 0k	125	5.0	M201
68▼#	SKT220-04AY	400	220	85C	200m	250m	3 0			1 6	800			45u⊠	50 §Ø	7.8k	130A	1 0	S355
69▼#	SKT220-04BY	400	220	85C	200m	250m	3 0			1 6	800			45u⊠	50 §	7 8k	130A	1.0	S355
70▼#	SKT220-04CY	400	220	85C	200m	250m	3 0			1 6	800			45u⊠	200 §	7.8k	130A	1.0	S355
71▼#	SKT220-04DY	400	220	85C	200m	250m	3 0			1 6	800			45u⊠	500 §	7.8k	130A	1.0	S355
72▼#	SKT220-04EY	400	220	85C	200m	250m	3 0			1.6	800			45u⊠	1.0k§	7 8k	130A	1.0	S355
73▼#	SKT221-04A	400	220	105C	200m	250m	3 0			1.6	800			100u	50 §Ø	7.8k	150A	1.0	S355
74▼#	SKT221-04B	400	220	105C	200m	250m	3 0			1.6	800			100u	50 §	7 8k	150A	1 0	S355
75▼#	SKT221-04C	400	220	105C	200m	250m	3 0			1.6	800			100u	200 §	7 8k	150A	1.0	S355
76▼#	SKT221-04D	400	220	105C	200m	250m	3 0			1 6	800			100u	500 §	7 8k	150A	1 0	S355
77▼#	SKT221-04E	400	220	105C	200m	250m	3 0			1.6	800			100u	1 0k§	7 8k	150A	1.0	S355
78#	20TC40	400	220	125	50m	100m	3 0			1 5	200	5 0u	200	30u		2 5k	125J	20	S183
79#	CR152-503A	400	230	70C	35mØ	150m	3 5	30m†	125C	1.5	450				100	3 1k	125	5.0	M201
80#	2SF824	400	230	85B		100m	2 5	20m	125J	1.8	1 0k					4 0k	125J	10	S167
81	NLF185D	400	235 Δ		500m	150m	2 5		125J	2.8	1.5k	8.0u	100	15u	200	3.5k	125J	2.0 †	TO93
82	151RC40	400 ⊠	235 Δ	62C	50mØ	100m	2.5	8.0mØ	125J	1.7 †	471		150	25u§		3 0kΔ	125J	2 †	TO93
83	151RB40	400 ⊠	235 Δ	75C	500m	150m	2 5	20m	125J	2.2 †	471	2 0u	150	40u§	200 Δ	2.5kΔ	125J	2 †	TO93
84#	SF150G11	400	235	76S	200m	150m	3 0	20m	125J	1.5	500					3.2k	125	16	S91b
85#	SH150G11	400	235	76C	200m	150m	3.0	20m	125	1 5	500	6 0u	150	30u§	50	3 2k	125	3.0 †	S91b
86	151RC40A	400 ⊠	235 Δ	80C	50mØ	100m	2 5	8 0mØ	125J	1 4 †	471		150	40u§		3 5kΔ	125J	2 †	TO93
87▼	151RF40	400 ⊠	235	80C	200m	200m	2 5	15m	125C	1.9 †	471		250	20u§	200 §	4 2kΔ	125J	3 0 †	TO93
88	C180DΔ	400	235 Δ	80C	500m	150m	3 0	10m	25	2.9 †	1.5k	8 0u	100	30u	200	3.5k	125C	2.0	TO93
89	C185DΔ	400	235 Δ	80C	500m	300m	3 0	10m	25	2 9 †	1.5k	8 0u	100	15u	200	3.5k	125C	2.0	TO93
90	NLF180D	400	235 Δ	80C	500m	150m	2 5	6 0m	125J	2.8	1 5k	8 0u	100	80u	200	3 5k	125J	2 0 †	TO93
91#	TT240	400	235	80C	250m	500m	3 0	25m	125J	1 7	450	5 0u	15	20u	100 §Ø	3 2k	125C	1.0	S204
92	151RA40	400 ⊠	235 Δ	85C	500m	150m	2 5	20m	125J	1 8 †	471	2 0u	150	60u§	200 Δ	3.5kΔ	125J	2 †	TO93
93#	CR151-503A	400	240	70C	35mØ	150m	3 5	30m†	125C	1.4	450				100	3 3k	125	5.0	M201
94#	CR250GX8	400	250	50C		350m	4 0	15m	125J	1 9	780 §		250	30u⊠	100 Δ	5 0kΔ	125J	16 Ø	M569
95#	CR250GY8	400	250	50C		350m	4 0	15m	125J	1.9	780 §		250	15u⊠	100 Δ	5 0kΔ	125J	16 Ø	M569
96#	FT250BX8	400	250	52C		350m	4 0	15m	125J	1.9	780 §		250	30u⊠	100	5.0kΔ	125J	16 Ø	M567
97#	FT250BY8	400	250	52C		350m	4 0	15m	125J	1.9	780 §		250	15u⊠	100 Δ	5 0kΔ	125J	16 Ø	M567
98#	CR250AX8	400	250	61C	30m	350m	4 0	15m	125J	1 9	780 §		250	30u⊠	100 Δ	5.0kΔ	125J	16 Ø	S158b
99#	CR250AY8	400	250	61C	30m	350m	4 0	15m	125J	1 9	780 §		250	30u⊠	100 Δ	5.0kΔ	125J	16 Ø	S158b
100#	2SF537	400	250	65C		350m	4 0	15mØ	125J	1 8	780				10 Δ	5.0k	125J	16 Ø	S158b
101#	CR250F8	400	250	65C		350m	4 0	15m	125J	1.8 §	780				100 §	5 0k	125J	3.0 †	S158e
102	2N3357	400	250	80C	200m§	400m§	4 0 §	15m	125C	2 0 §	250					5 0k§*	125C	3 0 †	TO108
103#	T250F400	400	250	85C	300m	200m	2 0	50m	125J	1 7	500	3 0u	100	30u§	400 §	5.5k§	125J	150	M387
104▼#	TY180NP4K2	400	260	70B	50m	200m	3 5	28m	125J	1.0	600	10u⊠	500	20n⊠	20 §	4.3k	125J	1 5 †	S375
105▼#	TY180QP4K2	400	260	70B	50m	200m	3 5	28m	125J	1 6	600	10u⊠	500	30u⊠	20 §	4.3k	125J	1 5 †	S375
106▼#	T221N400	400	260	85C	300m	200m	2 0	50m	125J	1 5	500	4 0u	100	60u	50	6 5k§	125J		M330d
107#	61TB4	400	275	67B		30	3 0	40m		2.4	665					3 2	125	2 0	M308a
108	260H	400	275	80		15	3 0	15m	125J	1.2					300	3 3k	125		TO93
109	2605H	400	275	105		15	3 0	15m	150J	1 2	100				300	5.0k	125		TO93
110♦#	40TC40	400	300		150m	100m	3 0			1 5					50 §Ø	4.5k*	125J		S348

SYMBOLS AND CODES EXPLAINED IN INTERPRETER

6. SILICON CONTROLLED RECTIFIERS

IN ORDER OF (1) PEAK REV. VOLT., (2) MAX. CONT. CUR., (3) TEMPERATURE, (4) TYPE No.

LINE No	4 TYPE No.	1 PRV and VBO (V)	MAX CONT. CURRENT 2 Idc (A)	3 at TEMP (°C)	MAX. HOLD CUR Ih @ 25°C (A)	MAX. GATE FIRING SPEC at 25°C Igf (A)	Vgf (V)	MAX SAT I Ir@PRV and Is@VBO (A)	at TEMP (°C)	MAX. FWD. VOLT. DROP at 25°C Vf (V)	@ If (A)	SWITCHING TIME at 25°C Ton (s)	for If (A)	Toff (s)	MIN. dV/dt @ 25°C (V/us)	ABS. MAX. RATINGS 1Cy PK SURGE I@25°C (A)	MAX TEMP (°C)	MAX GATE POWER (W)	DWG. No.
1#	CR300AW8	400	300	11A	30mØ	350m	4.0	15m	125J	1 9 §	780			50 §	100 §	5.0k	125J	16 Ø	S300
2#	CR300AX8	400	300	11A	30mØ	350m	4 0	15m	125J	1 9 §	780			30 §	100 §	5 0k	125J	16 Ø	S300
3#	CR300AY8	400	300	11A	30mØ	350m	4.0	15m	125J	1 9 §	780			15 §	100 §	5.0k	125J	16 Ø	S300
4▼#	2SF924	400	300	15A		350m	4.0	15m	125J	1 8 §	780				100 Δ	5.0kΔ	125J	16 Ø	S300
5#	CR300F8	400	300	15A		350m	4.0	15m	125J	1 8 §	780				100 §	5.0k	125J	16 Ø	S300
6	273H	400	300	70		15	3 0	15m	125J	1 3	100				300	3.3k	125		M414
7#	FT300C8	400	300	73C		350m	4 0	30m	150J	1 7	950 §				50 Δ	5.0kΔ	150J	16 Ø	M567
8▼#	FT300A8	400	300	81C		200m	3 0	30m	125J	1 6	940 §				200 Δ	6.0kΔ	125J	16 Ø	M567a
9▼#	40TCA40	400	300	125	150	100m	3.0								100 §	5.5k	125	10	
10	2231H	400	300	125J		300m	4.0	15m	125J	1 3 §	100	4.0u	100	30u	100	4 5k*	125J	3.0 †	M247
11	2232H	400	300	125J		300m	4 0	15m	125J	1 3 §	100	8 0u	100	40u	100	4.5k*	125J	3 0 †	M247
12	2248H	400	300	125J		300m	4.0	10m	125J	1 0 §	100	5.0u	150	50u	100	5.0k*	125J	3.0 †	M308c
13#	62TB4	400	315	65B		30	3.0	40m		2 2	665					3.7k	125	2.0	M308a
14#	CR253-503A	400	320	40C	35mØ	150m	3.5	30mt	125C	1 6	450				100	3.5k	125	5 0 Ø	M201
15#	CR252-503A	400	336	50C	35mØ	150m	3 5	30mt	125C	1 5	450				100	3.6k	125	5.0	M201
16#	70TB4	400	355	67B		30	3 0	40m		2 2	850					4.1	125	2.0	M308a
17▼#	T302N400	400	370	85C	300m	200m	2 0	50m	125J	1 4	500	4 0u	100	80u	50	7.2k§	125J		M330d
18	C380D	400	380	65C	500m	150m	3 0 §	10m	25C	2.8	1.5k	8 0u	100	100u	200	3.5k	120	2.0	M514
19	NLF380D	400	380	67	500m	150m	2 5	10m	25	2 8	1.5k	8 0u	100	100u	200	3.5k	125	2 0	
20	NLF385D	400	380	67	500m	150m	2 5	10m	25	2.8	1 5k	8 0u	100	20u	200	3.5k	125	2.0	
21	2N3534	400	400	20A	200m§	400m	4.0	15m	125J	1.9	250					5.0k	125J	16	M247
22#	71TB4	400	400	65B		30	3.0	40m		2 0	850					4.6k	125	2 0	M308a
23#	2SF832	400	400	68B		125m	3.0	25m	125J	1 6	1 0k					7.0k	125J	10	S280
24#	FT500AX8	400	400	75C		350m	4.0	30m	125J	2 2	1 2k§		400	30u⊘	200 Δ	7.0kΔ	125J	16 Ø	M406
25#	FT500AY8	400	400	75C		350m	4 0	3 0m	125J	2 2	1 2k§		400	15u⊘	200 Δ	7.0kΔ	125J	16 Ø	M406
26#	2SF804	400	400	80C		125m	3 0	25m	125J	1.4	1 0k		300	60u	20	7.0k	125J	2 †	S280
27#	2SF804A	400	400	80C		125m	3 0	25m	125J	1 4	1 0k		300	30u	20	7.0k	125J	.2 †	S280
28#	251RC40	400	400 Δ	85B	40m	15	2 5	7 0m		1 5	250	6.0u	50	100u	4 0	4 8k	125A	10 Ø	S158d
29#	2SF562	400	400	90B		125m	3 0	25m	125J	1 4	1 0k					7.0k	125	20	S280
30#	73TB4	400	430	64B		30	3 0	40m		2.0	1.0k					5 1k	125	2 0	M308a
31#	CR7K503A45	400	435	65C	55mØ	150m	3 5	50m	125J	1 8	1.0k	3 5u	600	180u	100	6 0k	125J	5 0 Ø	M308b
32▼#	YST302QP4K3	400	450	70B	100m	220m	3 5	30m	125J	1 9	1.0k	4 0u⊘	600	60u⊘	200 §	7 4k	125J	3 0 †	S371a
33#	CR7K503A4	400	460	65C	55mØ	150m	3 5	50m	125J	1.7	1 0k	3 5u	600	180u	100	6.4k	125J	5.0 Ø	M308b
34	276H	400	470			15	3 0	15m	125J	1 2	100				300	5 5k	125		M247
35	C291D△	400	470 Δ			150m	3 5										125A		S247a
36#	74TB4	400	470	63B		300m	3 0	40m		1 8	1 0k					5 6k	125	2 0	M308a
37	6RW71HY	400	470	65C		250m	3 1	10mØ	125J	65 Ø	300				4 0	5 5k§	125	16	S132
38♦	C290D	400	470	65C	100m	150m	3 5			1 2	500	10u	5.0	250u§	100 §	5 5k	125J	3 0	S132
39#	SF300G11	400	470	65C	300m	260m	3 5	20m	125J	1.6	1 0k	6.0u			15 §	5.0k	125J	3 0	S267a
40#	SH300G11	400	470	65C	300m	260m	3 5	20m	125J	1.6	100	6 0u	300	30u§	50	5 0k	125J	3 0 †	S267a
41	C291D⊘	400	470	66C	100m	150m	3 0	15m	125J	1 2 †	500	5.0u	5.0	100u§	100 §	5 5k	125J	3 0 †	M331a
42	NLC295D	400	470	67	100m	150m	3 0	15m	125	1 2	500	5 0u	5.0	20u	100	5 5k	125	3 0	
43	NLC297D	400	470	67	100m	150m	3 0	15m	125	1 2	500	5 0u	5 0	20u	100	5.5k	125	3 0	
44	NLF290D	400	470	67	100m	150m	3 0	15m	125	1 2	500	5 0u	5.0	100u	100	5 5k	125	3 0	
45	NLF295D	400	470	67	100m	150m	3 0	15m	125	1.2	500	5 0u	5 0	20u	100	5.5k	125	3.0	
46	NLF297D	400	470	67	100m	150m	3 0	15m	125	1.2	500	5.0u	5.0	20u	100	5 5k	125	3 0	
47	272H	400	470	71		15m	3 0	15m	125J	1.2	100				300	5 5k	125		M414
48#	301RC40	400	470 Δ	85B	40m	15	2 5	7 0m		1 4	300	6.0u	50	100u	4.0	5.5k	125A	10 Ø	S158d
49	NLF291D	400	470 Δ	125J	100m	150m	2 5	15m	125J	1 2	500	5 0u	100	100u§	100 §	5.5kΔ	125J	2.0 †	M436
50#	CR7K503A35	400	480	65C	140m	150m	3.5	50m	125J	1 6	1.0k	3.5u	600	180u	100	6 9k	125J	5 0 Ø	M308b
51▼#	YST301QP4K3	400	500	70B	100m	220m	3 5	30m	125J	1 9	1.0k	4 0u⊘	600	20u⊘	200 §	7 4k	125J	3.0 †	S371a
52#	FT500C8	400	500	77C		350m	4 0	30m	125J	1 7 §	1.5k				200 §	10k	125J	16 Ø	M481
53#	80TB4	400	510	59B		30	3 0	40m		1 5	1 2k					6 4k	125	2.0	M308a
54#	CR7K503A3	400	520	55	140m	150m	3 5			1 6	1 0k	3.5u	600	180u	100 Ø	7.0k	125	5.0	
55▼	NLC501D	400	550	25	250m	150m	6 5 §			1.5	1.0k			200u§	100 §	7 0k	125J	5.0 †	M593
56#	81TB4	400	550	56B		30	3 0	40m		1.7	1 2k					7 0k	125	2 0	M308a
57	270H	400	550	67		15	3 0	15m	125J	1 2	500				300	6.5k	125		S295
58#	84TB4	400	595	58B		30	3 0	40m		1.6	1 6k					8.6k	125	2.0	M428
59#	CR9K503A25	400	600	65C	55mØ	150m	3 5	50m	125J	1 3	1 0k	3.5u	600	180u	100	900	125J	5 0 Ø	M308b
60#	FT600A8	400	600	72C		350m	4 0	20m	125J	1 6	1.9k§				200 Δ	10kΔ	125J	16 Ø	M481
61#	91TB4	400	620	58B		30	3 0	40m		1.4	1 6k					8.6k	125	2 0	M428
62	C507D	400	625 Δ	125J	100m	150m	4 0	50m	125C	1 4	500	5.0u	25	100u⊘	100	6.5k	125J	26	M464
63	C508D	400	625 Δ	125J	100m	150m	4 0	50m	125C	1 3	500	5 0u	25	60u⊘	100	9.0k	125J	26	M464
64♦	420PA40S55	400 ⊘	660 Δ	68C	500m	150m	3 0	25m	125J	2.0 †	1 2k			25u⊘	100 §	5.5kΔ	125J	16 Ø	Y200c
65#	CR9K503A2	400	680	65C	55mØ	150m	3 5	50m	125J	1 1	1.0k	3 5u	600	180u	100	11k	125J	5.0 Ø	M308b
66#	94TB4	400	700	55B		30	3 0	40m		1.2	1.6k					8.6k	125	2.0	M428
67♦	470PB40S57	400 ⊘	740 Δ	67C	500m	150m	3.0	25m	125J	1 9 †	1 4k			35u⊘	100 §	6.0kΔ	125J	16 Ø	Y200c
68▼#	FT800C8	400	800	63C		200m	3 0	30m	125J	1 6 §	2.5k				200 Δ	14kΔ	125J	16 Ø	M566
69	C530D	400	980 Δ	125J	250m	150m	4 0	25m	125J	1 2	1 1k	4 0u	25	150u⊘	100	10k	125J	26	M464
70	C520D	400	1 1kΔ	150J	250m	150m	4 0	25m	125C	1 2	1 1k	4 0u	25	150u⊘	100	10k	150J	26	M464
71#	CRS1/40AF	440	1.25	65C	20m	10m	3 0	1 0mΔ	125J	1 2	1 5	2 0u	1 0	15u	15	20	125J	1.0	T05
72#	CRS3/40AF	440	4 5	90B	25m	20m	3 0	1 0mΔ	125J	1 3	4.5	2 0u	3.0	17u	15	55	125J	2 0	S62
73	SCRFL45	450 ⊘	1 7	80C	50m	15m	2 0	900u	125C	1 2 Δ	1 0	2 0u§	1 0	12u§		60 §	125C	5.0	A130
74	SCRL45	450 ⊘	1.7	80C	20m	15m	2 0	90mΔ	125C	1 2 Δ	1.0	1 3u§	1 0	15u§		60 §	125C	5 0	A130
75	SCR345	450 ⊘	4 0	80C	25m	10m	2 0	1 0mΔ	125C	2 0 Δ	3 0	1 3u§	1.0	15u§		60 §	150J	5.0	S62
76	SCR545	450 ⊘	7 0	60C	25m	15m	2 0	1.0m	125C	1.9 Δ	15	1 0u§	10	15u§		100 §	125J	10	S121
77	SCRF545	450 ⊘	7 0	60C	50m	25m	2.0	1 0m	125C	1 9 Δ	15	2 0u§	10	12u§		100 §	125J	10	S121
78	SCR545A	450 ⊘	7 0	110C	25m	15m	2 0	1 0mΔ	150C	1.9 Δ	15	1 0u§	10	15u§		100 §	150J	10	S121
79	SCR845	450 ⊘	16	25C	100m	75m	3 5	6.0mΔ	100C	3 0	50	3.0u§	10	30u§		150 §	100J	15	T048
80	16C45	450	16	125J	50m	15m	2.0	10m	125J	2.0	50	7.0u	16	75u§		150	125J	5.0 Ø	T048#Δ
81	16C45B	450	16	125J	50m	40m	2 0	10m	125J	2.0	50	7.0u	16	75u§	25	150	125J	5 0 Ø	T048#Δ
82	16C45C	450	16	125J	50m	40m	2 0	10m	125J	2.0	50	7.0u	16	75u§		150	125J	5 0 Ø	T048#Δ
83#	BTX12/450R	450	20	64C	40m	50m	3 0	6.0m	125J	3 5	175	4.0u	10	9.0u	20	250	125J	5 0	S182
84	SCR1645	450 ⊘	35	25C	50m	40m	3 0	4.0mΔ	125C	2.0	50	1.5u§	10	20u§		200 §	125J	15	T048
85	SCR1645A	450 ⊘	35	25C	50m	40m	3 0	4.0mΔ	125C	2 0	50	1 5u§	10	20u§		250 §	125J	15	T048
86	SCRF1645	450 ⊘	35	25C	100m	40m	3 0	4 0mΔ	125C	2 0	50	2 0u§	10	12u§		200 §	125J	15	T048
87	35C45	450	35	125J	200m§	200m	3 0	10m	125J	2 5	220	10u	35	40u§		900	125J	15 Ø	T094#Δ
88	35C45B	450	35	125J	200m§	200m	3.0	10m	125J	2.5	220	10u	35	40u§	100	900	125J	15 Ø	T094#Δ
89	35C45BF	450	35	125J	200m§	200m	3.0	10m	125J	2 5	220	10u	35	40u§	100	900	125J	15 Ø	T083#Δ
90	35C45F	450	35	125J	200m§	200m	3 0	10m	125J	2.5	220	10u	35	40u§		900	125J	15 Ø	T083#Δ
91	70C45	450	70	125J	200m§	200m	3 0	10m	125J	1 8	220	10u	70	40u§		1 6k	125J	15 Ø	T094#Δ
92	70C45B	450	70	125J	200m§	150m	3 0	10m	125J	1.8	220	10u	70	40u§	100	1 6k	125J	15 Ø	T094#Δ
93	70C45BF	450	70	125J	200m§	150m	3 0	10m	125J	1 8	220	10u	70	40u§	100	1.6k	125J	15 Ø	T094#Δ
94	70C45C	450	70	125J	200m§	100m	2 0	10m	125J	1.8	220	10u	70	40u§		1.6k	125J	15 Ø	T094#Δ
95	70C45CF	450	70	125J	200m§	100m	2 0	10m	125J	1 8	220	10u	70	40u§		1.6k	125J	15 Ø	T083#Δ
96	70C45F	450	70	125J	200m§	200m	3 0	10m	125J	1.8	220	10u	70	40u§		1.6k	125J	15 Ø	T083#Δ
97	100C45	450	100	125J	200m	200m	2 5	25m	125J	2 0	500	10u	100	40u§		2.0k	125J	10 Ø	T093#Δ
98	100C45B	450	100	125J	200m	200m	2 5	25m	125J	2 0	500	10u	100	40u§	100	2.0k	125J	10 Ø	T093#Δ
99	150C45	450	150	125J	200m	200m	2 5	25m	125J	1.7	500	10u	150	40u§		3.0k	125J	10 Ø	T093#Δ
100	150C45B	450	150	125J	200m	200m	2 5	25m	125J	1 7	500	10u	150	40u§	100	3.0k	125J	10 Ø	T093#Δ
101	C37D⊘	480	25	37C	20mØ	80m	3 0	2.0mØ	105J	2 3 †	30	1 4u	5 0			175	105J	.50 †	T048
102	C40D⊘	480	35	62C	10mØ	40m	2 5	2.0mØ	125J	2 0 †	50	1.4u	5 0	8.0u	200 §	150	125J	.50 †	T048
103	C45D⊘	480	55	89C	100m	70m	3 0	4 0m	125J	3 0 †	500	5.0u	50	30u§	200 §	1.2k	125J	500mt	T083
104	C46D⊘	480	55	89C	100m	70m	3 0	4.0m	125J	3 0 †	500	5.0u	50	30u§	200 §	1 2k	125J	500mt	T049
105	NL555D	480	55	89C	300m	150m	2 5	10m	125J	3 5 †	500	8.0u	50	100u§	200 §	1.2k	125J	2 †	T049
106	NL556D	480	55	89C	300m	150m	2 5	10m	125J	3 5 †	500	8.0u	50	100u§	200 §	1 2k	125J	2 †	T083
107	NLF45D	480	55	89C	100m	70m	3 0	4 0m	125J	3 0 †	500	5.0u	50	30u§	200 §	1 2k	125J	500mt	T083
108	NLF46D	480	55	89C	100m	70m	3 0	4 0m	125J	3.0 †	500	5.0u	50	30u§	200 §	1.2k	125J	500mt	T094
109	2N1798	480	70 Δ	65C		130m$	3 0 $	4.0mØ	65C	1.8 †	70					1.0k*	125C	.50 †	T083
110	C55D⊘	480	110	60C	100m	70m	2 5	4.0m	125J	2.5 †	500	5.0u	5.0	15u§	200 §	1.2k	125J	.50 †	T049

SYMBOLS AND CODES EXPLAINED IN INTERPRETER

6. SILICON CONTROLLED RECTIFIERS

IN ORDER OF (1) PEAK REV. VOLT., (2) MAX. CONT. CUR., (3) TEMPERATURE, (4) TYPE No.

LINE No	4 TYPE No.	1 PRV and VBO (V)	MAX. CONT. CURRENT 2 Idc (A)	3 at TEMP (°C)	MAX. HOLD. CUR Ih @ 25°C (A)	MAX. GATE FIRING SPEC at 25°C Igf (A)	Vgf (V)	MAX SAT I Ir@PRV and Is@VBO (A)	at TEMP (°C)	MAX. FWD. VOLT. DROP at 25°C Vf (V)	@ If (A)	SWITCHING TIME at 25°C Ton (s)	for If (A)	Toff (s)	MIN. dV/dt @ 25°C (V/us)	ABS MAX. RATINGS 1Cy PK SURGE I@25°C (A)	MAX TEMP (°C)	MAX GATE POWER (W)	DWG. No.
1	C56D⊘	480	110	60C	100m	70m	2 5	4.0m	125J	2.5 †	500	5 0u	5 0	15u§	200 §	1.2k	125J	500m	TO83
2	C154D⊘	480	110	83C	500m	200m	2 5	8 0m	125J	3 0 †	500	5.0u	50	7.0u§	200 §	1 4k	125J	2 0 †	TO94
3	C155D⊘	480	110	83C	500m	200m	2.5	8.0m	125J	3.0 †	500	5.0u	50	12u§	200 §	1 4k	125J	2 0 †	TO94
4	C156D⊘	480	110	83C	500m	200m	2.5	8.0m	125J	3.0 †	500	5.0u	50	7 0u§	200 §	1 4k	125J	2 0 †	TO83
5	C157D⊘	480	110	83C	500m	200m	2.5	8 0m	125J	3 0 †	500	5 0u	50	12u§	200 §	1.4k	125J	2 0 †	TO83
6	NLF150D	480	110	89C	500m	150m	2.5	10m	125J	2 6 †	500	8 0u	50	100u§	200 §	1.6k	125J	2 0 †	TO94
7	NLF152D	480	110	89C	500m	150m	2.5	10m	125J	2 6 †	500	8.0u	50	100u§	200 §	1 6k	125J	2.0 †	TO83
8	C178D	480	200	64C	500m	300m	2.5	12m	125J	3.5 †	1 5k	8.0u	100	150u§	200 §	2 5k	125J	2 0 †	TO93
9	C181D	480	235	65C	500m	300m	2 5	12m	125J	3.5 †	1 5k	8 0u	100	30u§	200 §	2 5k	125J	2 0 †	TO93
10	C180D⊘	480	235	80C	500m	150m	2 5	6 0m	125J	2 9 †	1 5k	8 0u	100	30u§	200 §	3 5k	125J	2 0 †	TO93
11	C185D⊘	480	235	80C	500m	300m	2 5	12m	125J	2.9 †	1 5k	8 0u	100	15u§	200 §	3 5k	125J	2 0 †	TO93
12	C354E	500			500m	500m	4 0	12m	25C	3 0 †	500 †		50	7 0u§	200 §	1.2k	125J	2 0	M514
13	C355E	500			500m	500m	4.0	12m	25C	3 0 †	500 †		50	12u§	100 §	1 2k		2 0	M514
14	C385E	500			500m	300m	3 0	10m	25C	2 8 †	1 5kt		250	15u§	200 §	3 5k		2.0 †	M514
15	C506E	500			500m	220m	5.0	10m	25C				300	40u§	200 §	8 0k	125J	5 0 †	M464
16	C510E	500			500m	200m	5 0	10m	25C	2 2 †	500 §		300	12u§	200	4 0k	125J	2 0 †	M464
17#	10RCV50	500		125	50m	45m	2.9	4 0m	125	2 3			135	10u	100	135	125	50	TO48
18#	2SF526	500 ⊘	40	25A	2.0m⊘	3 0m	1 0	20m⊘	125J	1 2	1 0					20	125J	1 ⊘	TO5
19♦#	CR05A10	500 ⊘	400m	25A		3 0m	1.0	200u	125J	1 2	1 0					20 △	125J	100m⊘	TO5
20#	TD5001J	500	600m	25A	40m⊘	20m	3 0	1 0m	125J	2 0	1 0	1 5u§	500m	15u§	50 ⊘§	12		60m	C16e
21#	TO 8N5A00	500	90	85C	20m	10m	3 0			1 2	1 0	2 0u	1 0	15u	15	19	125J	1 ⊘	TO5
22#	GCO5001	500	1 0	25A	25m⊘	25m	3 0	1 0m	100J	2.0	1 0	1 5u§	1 0	5 0u⊘		3 0		75m	C16e
23#	TD5	500	1 0	25A	20m⊘	10m	3 0	1 0m	125J	2 0	1.0	1 5u§	500m	20u§	50 ⊘§	15		30m	C16e
24#	TD5001	500	1.0	25C	1 0m⊘	2 5m	5 0	1 0m	100J	2 0	75	1 5u	.60	20u		12	100A	.01	TO5
25#	TAG1-500	500	1 0	70C	25m	10m	2.0	1 0m	105	2 0	2 0					15	105J	30m†	TO5
26#	T1N500	500	1 0	85C	25m	10m	2 0	1 0m	125J	1 9	2 0	5 0u	1 0	25u	10 §	15	125J	400m	TO5
27#	BTX18-500	500 §	1 0	105C	5 0 §	5 0m	2 0	160u	125	1 5	1 0		300m	20u	75 §	10	125	500m⊘	TO5
28	SCR15A	500 ⊘	1 1	25C	20m	15m	2 0	900u△	125C	1 2 △	1 0	1 0u§	30	20u§		60 §	125J	5 0	A130
29	SCRF15A	500 ⊘	1 1	25C	50m	15m	2 0	90m△	125C	1 2 △	1 0	2 0u§	1 0	6 0u§		60 §	125J	5 0	A130
30#	BRY44	500 #	1 50	25A	25m	25m	3 0	1 0m	25	1 3	4 5					55	125	75m	
31#	BTX30-500	500	1 6	70C	25m	10m	2.0	1 0m	125	1 9	2 0					15	125J	30m†	TO5
32	SCR150	500 ⊘	1 6	85C	25m	10m	3 0	1.0m△	125J	2 0 △	1.0	1 4u§	1 0	20u§		60 §	150S	5 0	TO5
33	SCRFL50	500 ⊘	1 7	80C	50m	15m	2.0	90m	125C	1 2 △	1 0	2 0u§	1 0	12u§		60 §	125C	5 0	A130
34	SCRL50	500 ⊘	1 7	80C	20m	15m	2 0	90m△	125C	1 2 △	1 0	1 3u§	1 0	15u§		60 §	125C	5.0	A130
35♦#	BT100A500R	500	2 0	75B	15m	10m	2 0	1.0m	100J	1 4	5 0	1 3u	3 0	10u	10 §	40 *	100J	100m†	M625
36	JAN2N4201	500	2 0 △	85C	5 0m⊘	50m	1 5	4.0m	100C	25 †	30		2 0	15u	250 §	100 §	100J	20 ⊘	S17c
37	2N4201	500 △	2 0	90C	3 0m§	100m§	2.0 §	2.0m△	105C	1 5 †	2 0	20u		20u	250	15 *	105A	20 ⊘	S17a
38	MCR729-7	500 △	2 0 ⊘	105J	15m⊘	50m	1 5	2 0m△§	105J	1 5	2 0	.20u	30		50 §	100 *†	105J	20 ⊘	S258
39#	TM5004	500	2 5	25A	30m⊘	25m	3 0	3.0m	110J	2.0	8 0	2 0u§	1 0	60u§	50 ⊘§	50		75m	S141d
40	UCR50L	500 △	2 5	25A	50m	50m				1.2	3 0	450n	30	15u	250	60	125J	3.0 ⊘	A253
41	NCM500C	500	3 0	$	15m⊘	30m	1 5	2 0m	100J	1 5	5 0	1 0u⊘		10u⊘	25 §		100	20 ⊘	S17
42#	2SF533	500	3 0	40C	5 0m⊘	20m	2 0	1 5m⊘	125J	1 2	3 0					50	125J	1 ⊘	C63a△
43	RTR0150	500	3 0	65C	100m	50m	3 0	2.0m	100	2 5	10	20u	3 0		100	40	100C		TO66
44	C15E	500	3 0	75C	30m	25m	2.5	2.0m	105J	1 9 †	15					60	105J	50	TO64
45	NCR500B	500	3 0	80B$		25m	2 5	1 0m	125C	2.0 §	1 0					25 §	100A		S17
46	RTN0150	500	3 0	80C	100m	50m	3.0	2 0m	100	2.5	10	20u	3 0		100	40	100C		TO64
47	RTS0150	500	3 0	80C	100m	50m	3 0	2.0m	100	2 5	10	20u	3 0		100	40	100C		M94
48#	CR3D10	500 ⊘	3 0	95C	5 0m⊘	20m	2 0	1 5m	125J	1 2	3 0					50 △	125J	1 0 ⊘	C63a
49	SCR35A	500 ⊘	4 0	80C	25m	15m	2 0	1 0m△	125C	2 0 △	3 0	1 0u⊘	60			60 §	125J	5 0	S62
50	SCR350	500 ⊘	4 0	80C	25m	10m	2 0	1 0m△	125C	2 0 △	3 0	1 3u	1 0	15u§		60 §	150J	5 0	S62
51	SCRF35A	500 ⊘	4 0	80C	50m	15m	2 0	1 0m△	125C	2.0 △	3 0	2.0u§	1 0	6 0u§		60 §	125J	5 0	S62
52#	T3N5C00	500	4 0	100B	25m	20m	3 0			1 2	3 0	2.0u	3 0	17u	15	55	125J	2 ⊘	S62
53	3TCRI	500 ⊘	4 2	60B	50m	50m	3 0	1 0m⊘	125J	1 4 ⊘	3 0 §	2.0u	3 0	30u		40 *	150S	5 ⊘	S56
54#	TM5007	500	4 5	25A	40m⊘	40m	3 0	3 0m	110J	2 0	15	2 0u§	6 0	50u§	50 ⊘§	80		120m	S141d
55	2N1778	500	4 7 △	60C		30m$	2 0 $	2 0m	125C	1 8 †	4 7					60 *	125C	50 †	TO64
56	3RC50	500 ⊘	4 7 △	92C	5 0m⊘	15m	2 0	1 0m	105C	2 0	9 4 †					30 △	105J	50 †	TO64
57	3RC50A	500 ⊘	4 7 △	105C	5 0m⊘	10m	3 0	2 0m	125C	2 0	9 4 †					40 △	125J	50 †	TO64
58#	GCO5005	500	5 0	25A	100m⊘	150m	3 0	3 0m	100J	2 2	5 0	1 5u§	5 0	2 0u⊘		20		450m	S141d
59	RTR0250	500	5 0	65C	100m	50m	3.0	2 0m	100	2 5	15	20u	5 0		100	60	100C		TO66
60	RTR0350	500	5 0	65C	25m	15m	1.5	1 0m	100	2 0	15	20u	5 0		100	60	100C		TO66
61	RTR0450	500	5 0	65C	100m	50m	3 0	2 0m	125	2 5	15	20u	5 0		100	60	125C		TO66
62	2N4173	500	5 0	70C	60m$	50m$	2 5 $	2 0m	100C							100 *	100C	5 0 ⊘	S262
63	2N4181	500	5 0	70C	60m$	50m$	2 5 $	2.0m	100C							100 *	100C	5 0 ⊘	S263
64#	TAG3-500	500	5 0	70	25m	15m	2 0	1 5m	105	2 1	10					60	105	5 0	TO66
65#	2SF269	500	5 0	73C	10m⊘	30m	2 5	3 0m⊘	100J	1 3	5 0					90	100J	5 ⊘	S141b
66	2N4157	500	5 0	75C	60m$	50m$	2 5 $	2 0m	100C							100 *	100C	5 0 ⊘	C84
67	2N4165	500	5 0	75C	60m$	50m$	2 5 $	2 0m	100C							100 *	100C	5 0 ⊘	C85
68	2N4189	500	5 0	75C	60m$	50m$	2 5 $	2 0m	100C							100 *	100C	5 0 ⊘	S264
69	2N4197	500	5 0	75C	60m$	50m$	2 5 $	2 0m	100C							100 *	100C	5 0 ⊘	M363
70	MCR2604-7	500 △	5 0	75C	60m§	50m§	2 5 §					1 0u	5 0	15u		100 *	100C	5 0 ⊘	
71	MCR2605-7	500 △	5 0	75C	60m§	50m§	2 5 §					1 0u	5 0	15u		100 *	100C	5 0 ⊘	M305
72#	BStC0133	500	5 0	80C	100m	40m	2 0	2 0m	125J	1 8	15				50 §	70	125J		S343
73#	BStC0533	500	5 0	80C	100m	40m	2 0	2 0m	125J	1 8	15				50 §	70	125J		TO66
74	RTN0250	500	5 0	80C	100m	50m	3 0	2 0m	100	2 5	15	200n	5 0		100	60	100C		TO64
75	RTN0350	500	5 0	80C	25m	15m	1 5	1 0m	100	1 8	15	20u	5 0		100	60	100C		TO64
76	RTN0450	500	5 0	80C	100m	50m	3 0	2 0m	125	2 5	15	.20u	5 0		100	60	125C		TO64
77	RTN0550	500	5 0	80C	25m	15m	1 5	1 0m	125	1.8	15	20u	5 0		100	60	125C		TO64
78	RTN0650	500	5 0	80C	25m	15m	1 5	1 0m	150	1 8	15	20u	5 0		100	60	150C		TO64
79	RTR0550	500	5 0	80C	25m	15m	1 5	1 0m	125	2 0	15	20u	5 0		100	60	125C		TO66
80	RTS0250	500	5 0	80C	100m	50m	3 0	2 0m	100	2 5	15	20u	5 0		100	60	100C		M94
81	RTS0350	500	5 0	80C	25m	15m	1 5	1 0m	100	1 8	15	20u	5 0		100	60	100C		M94
82	RTS0450	500	5 0	80C	100m	50m	3 0	2.0m	125	2 5	15	20u	5 0		100	60	125C		M94
83	RTS0550	500	5 0	80C	25m	15m	1 5	1 0m	125	1 8	15	20u	5 0		100	60	125C		M94
84#	CR5-502B	500 †	5 0	125C	150m	80m	3 0	5.0m	125C	3 0	5 0	2 0u	5 0	12u	20		125C	1.0	TO48
85#	2SF228	500	6 0	25C		25m	3 0	1 5m	100C	1 2 △	3 0					50	100	5 ⊘	S141
86#	TM5010	500	6 0	25A	40m⊘	40m	3 0	3 0m	110J	2 0	20	2 0u§	6 0	50u§	50 ⊘§	100		120m	S141d
87	NCF500C	500	6 0	70B$		30m$	2 0 $	4.5m⊘	60C	1 9 $	4 7			12u⊘		60	100A	50	S17
88	T506	500	6 0	70	50m	80m	5 0			2 2		2 5u			30 ⊘	100	100J		M94
89	T506-5	500	6 0	70	50m	80m	5 0			2 2		2 5u			30 ⊘	100	100J		TO5
90	T506-66	500	6 0	70	50m	80m	5 0			2 2		2 5u			30 ⊘	100	100J		TO66
91	T506S	500	6 0	70	50m	80m	5 0			2.2		2 5u			30 ⊘	100	100J		S131
92#	T6F500C	500	6 0	85C	60m	40m	2 0	2 0m	125J	2.5	20	1 0u	10	12u§	400 §	100 §	125J	15	S131j%
93#	T6N500H	500	6 0	85C	60m	20m	2 0	2 0m	125J	2 5	20	1.0u	10	17u§	50 §	100 §	125J	15	M94e%
94#	TW6N500C	500	6 0	85C	60m	50m	3 0	2 0m	125J	2.5	10				5 0 §	60 §	125J	3 0	S131j%
95#	TW6N500H	500	6 0	85C	60m	50m	3 0	2 0m	125J	2.5	10				5 0 §	60 §	125J	3 0	M94e%
96#	CR5-501B	500 †	6 0	95C	150m	80m	3 0	5.0m	125C	3 0	5 0	2.0u	5 0	12u			125C	1 0	TO48
97#	TP5004	500	6 0	100C	100m	40m	3 0	3 0m		1.2	4 0	2.0u	4 0	30u	100 §⊘	80	125C	50	S18a
98#	4RCM50	500	6 3	85B	45m	85m	3 0	1 0m	105	1 9	4 0			20u	20	50	105	50	TO64
99#	BTY79-500R	500 §	6 4	85C	20	30m	3 0	5 0m	125	2 3		3.0u	10	20u		80	125	5 0 ⊘	TO64
100#	2SF1119	500	6 5	25	6 0	28m	2 0	2 0	125J	1 4	10		3 0	20	50	50	125J	500m	C63c
101#	2SF200	500 ⊘	6 5	60B		20m	2 1	2 0m	100J	2.3	20					50	100J	50	S105a
102#	BT107	500	6 5	60B		10m	2 0	2 0m	100J	2 0	20					70	100J	500m†	TO64
103#	BT108	500	6 5	60B		50m	3 5	2 0m	100J	2 0	20					70	100J	500m†	TO64
104	5TCRI	500 ⊘	7 0	60B	50m	50m	3 0	1 0m⊘	125J	83 ⊘	5 0 §	2 0u	5 0	30u		60 *	150S	5 ⊘	S56
105	SCR55A	500 ⊘	7 0	60C	25m	20m	2 0	1 0m△	125C	1 9 △	15	1 0u§	100	20u§		100 §	125J	10	S121
106	SCRF55A	500 ⊘	7 0	60C	50m	20m	2 0	1 0m△	125C	1 9 △	15	2 0u§	10	6 0u§		100 §	125J	10	S121
107	SCRF550	500 ⊘	7 0	60C	50m	25m	2 0	1 0m	125C	1 9 △	15	2 0u§	10	12u§		100 §	125J	10	S121
108	2N3940	500	7 0	80C	110m	60m	3 2	1 0m	125C	2 3	7 0	3 0u		8 0u§		100 *§	125C	50	TO64
109	SCR550A	500 ⊘	7 0	110C	25m	15m	2 0	1 0m△	150C	1 9 △	15	1 0u§	10	15u§		100 §	150J	10	S121
110	5RC50	500 ⊘	7 4 △	60C	5 0m⊘	15m	2 0	1 0m	105C	1 9	15 †	2 5u	60		20	60 △	105J	50 †	TO64

SYMBOLS AND CODES EXPLAINED IN INTERPRETER

6. SILICON CONTROLLED RECTIFIERS

IN ORDER OF (1) PEAK REV. VOLT., (2) MAX. CONT. CUR., (3) TEMPERATURE, (4) TYPE No.

LINE No.	4 TYPE No.	1 PRV and VBO (V)	MAX CONT. CURRENT 2 Idc (A)	3 at TEMP (°C)	MAX. HOLD. CUR Ih @ 25°C (A)	MAX. GATE FIRING SPEC at 25°C Igf (A)	Vgf (V)	MAX SAT I Ir@PRV and Is@VBO (A)	at TEMP (°C)	MAX. FWD. VOLT. DROP at 25°C Vf (V)	@ If (A)	SWITCHING TIME at 25°C Ton (s)	for If (A)	Toff (s)	MIN. dV/dt @ 25°C (V/us)	ABS. MAX. RATINGS 1Cy PK SURGE I@25°C (A)	MAX TEMP (°C)	MAX GATE POWER (W)	DWG No.
1	5RCF50A	500 ⧄	7 4 △	60C	5 0mØ	15m	1.4	1 0m	125C	1 9	15 †	2.5u	5 0	12u		60 △	125J	.50 †	T064
2	5RC50A	500 ⧄	7 4 △	80C	5 0m	15m	1 4	2 0m	125C	1 9	15 †	2 5u				75 △	125J	50 †	T064
3#	CR4-501A	500 †	7 4 △	80	30m	25m	2.0	2 5m	100J	1 8	10	1 1u	8 0	50u	20 △	80 △	125J	5.0 Ø	M94
4#	CR4-501B	500 †	7 4 △	80	30m	25m	2.0	2 5m	100J	1 8	10	1 1u	8 0	50u	20 △	80 △	125J	5 0 Ø	S131
5#	TAG6-500	500	7 5	70C	25m	25m	2.0	1.5m	105	1 7	10					100	105	500m†	T066
6#	TAG7-500	500	7 5	70C	25m	25m	2 0	1 5m	105	1 7	10					100	105	500m†	T048
7#	TAG7S500	500	7 5	70C	25m	25m	2.0	1 5m	105	1.7	10			12u		100	105	500m†	T048
8#	BTX31-500	500	7 5	85	15m	15m	3 0	1 5m	125	1 7	10					100	125	5 0	T048
9#	BTX31S500	500	7 5	85	15m	15m	3 0	1.5m	125	1 7	10			12u		100	125	5.0	T048
10#	BTX71-500	500	7.5	85	40m	40m	3.0	1 5m	125	1.7	10	1.4u	5 0	20u	100	100	125	5 0	T048
11#	BTX71S500	500	7 5	85	40m	40m	3 0	1 5m	125	1 7	10	1 4u	5.0	12u	100	100	125	5.0	T048
12	2N3758	500	7.5	100	200m	200m	2.3	3 5m	120A				10	75u	200	250 *	120A	2.0	T048
13#	SF5H11	500	8.0	24		20m	2 0	2 0m	125J	2 0	20					60	125J	500m	S141a
14▼	TIC116E	500	8 0	70	40m	20m	1 5	2 0m	110C	1 7	8 0				100 Ø	80	110C	5.0	
15#	T6F500H	500	8 0	85C	60m	40m	2.0	2 0m	125J	2 5	20	1 0u⧄	10	12u§	400 §	75 §	125J		M94e%
16#	T8F500C	500	8.0	85C	60m	40m	2.0	2 0m	125J	2 0	20	1.0u	10	12u§	400 §	120 §	125J	15	S131j%
17#	T8N500C	500	8.0	85C	60m	20m	2.0	2 0m	125J	2.0	20	1 0u	10	18u§	50 §	120 §	125J	15	S131j%
18#	T8N500H	500	8 0	85C	60m	20m	2 0	2 0m	125J	2 0	20	1.0u	10	18u§	50 §	120 §	125J	15	M94e%
19#	TW8N500C	500	8 0	85C	60m	50m	3 0	2.0m	125J	1 9	10				5 0 §	80 §	125J	3 0	S131j%
20#	TW8N500H	500	8.0	85C	60m	50m	3 0	2 0m	125J	1 9	10				5.0 §	80 §	125J	3.0	M94e%
21▼	HEPR1246-RT	500	8.0	100J	25mØ§	20m§										100 §	100		S230
22#	BTX64/500R	500	8 5	85B	10mØ§	65m	3 5	6 0m	125J	3 0	50	40u	10	10u	100	140 *	125J	.5 †	T048
23#	TP5006	500	9 0	100C	100m	40m	3 0	3 0m		1 2	6 0	2 0u	6 0	30u	100 §Ø	100	125C	.50	S18a
24#	T8F500H	500	9.5	85C	60m	40m	2 0	2.0m	125J	2 0	20	1.0u⧄	10	12u§	400 §	95 §	125J		M94e%
25	NCF500D	500	10		15mØ	50m	3 5	3 0m	100	1 2	10	500n	10	6.0u	25 §	125	100A	.50 †	T048
26	NCM500E	500	10		25mØ	150m	2.0			1.2	10	500n	10	6 0u	200 §		120A	1 0 †	T048
27	2N1850	500	10 △	35C		150m$	3 5 $	3 0mØ	35C	2 5 †	10					125 *	100C	.5 †	T048
28#	CR10B10	500	10	59C		30m	2 5	3.0m	100J	1 6	30					150 △	100J	5.0 Ø	S334
29#	2SF279	500	10	63C	10mØ	30m	2.5	3 0mØ	100J	1 2	10					90	100J	5 Ø	S141b
30#	2SF279A	500	10	63C	10mØ	30m	2 5	3 0mØ	100J	1.2	10		10	15u⧄	100 △	90	100J	5.0 Ø	S141b
31	RTT0150	500	10	65C	200m	50m	3.0	2.0m	100	2 5	30	20u	10		100	100	100C		T048
32	RTT0450	500	10	65C	200m	50m	3 0	2 0m	125	2.5	30	20u	10		100	100	125C		T048
33	RTU150	500	10	65C	20	50m	3 0	2 0m	100	2.5	30	200n	10		100	100	100C		S131
34	RTU0450	500	10	65C	20	50m	3 0	2.0	125	2.5	30	200n	10		100	100	125C		S131
35▼#	CR10CY10	500	10	66C		40m	2 5	4.0m	125J	2 5	30		10	15u⧄	100 △	140 △	125J	5 0 Ø	S350
36#	CR10EY10	500	10	66C		40m	2 5	4.0m	125J	2.5	30		10	15u⧄	100 △	140 △	125J	5 0 Ø	S334
37#	CR5-502AB	500	10	70C	20mØ	80m	3.0	10m	100C	2.0	16	2.0u	20	20u⧄	20	90	125	5.0 Ø	
38#	CR5-502BB	500	10	70C	20mØ	80m	3 0	10m	100C	2.0	16	2.0u	20	15u⧄	20	90	125	5 0 Ø	
39#	CR5-502CB	500	10	70C	20mØ	80m	3 0	10m	100C	2 0	16	2.0u	20	12u⧄	20	90	125	5.0 Ø	
40#	CR5-502DB	500	10	70C	20mØ	80m	3 0	10m	100C	2 0	16	2.0u	20	8.0u⧄	20	90	125	5.0 Ø	
41#	CR5-502EB	500	10	70C	20mØ	80m	3 0	10m	100C	2.0	16	2.0u	20	6.0u⧄	20	90	125	5.0 Ø	
42#	CR5-5029B	500	10	70C	20mØ	80m	3.0	10m	100C	2.0	16	2.0u	20	4 0u⧄	20	90	125	5.0 Ø	
43#	CR6-603RB	500	10	70C	28mØ	80m	3 0	5.0m†	100C	2.0	16	2 3u	20	80u	20	100	125	5 0	
44#	CR6-603RBA	500	10	70C	28mØ	80m	3 0	5.0m†	100C	2 0	16	2.3u	20	80u	200	100	125	5 0	
45	T510	500	10	70	60m	100m	5 0			2 2		3.0u			30 Ø	100	100J		M94
46	T510S	500	10	70	60m	100m	5 0			2 2		3 0u			30 Ø	100	100J		S131
47#	TAG10-500	500	10	70	25m	25m	3.0	1 5m	105	2.0	15					120	105	5 0	T048
48#	TAG10S500	500	10	70	25m	25m	3 0	1 5m	105	2 0	15			12u		120	105	5 0	T048
49	2N1850A	500	10 △	80C		150m$	3 7 $	3.0mØ	80C	2 5 †	10					125 *	125C	5 †	T048
50▼#	CR10C10	500	10	84C		30m	2 5	3 0m	125J	1 6	30				20 △	150 △	125J	5 0 Ø	S350
51#	BTX32-500	500	10	85	25m	25m	3.0	1 5m	125	2.0	15					120	125	5 0	T048
52#	BTX32S500	500	10	85	25m	25m	3.0	1.5m	125	2.0	15			12u		120	125	5.0	T048
53#	BTX72-500	500	10	85	40m	40m	3 0	1.5m	125	2 0	15	1 4u	5.0	20u	100	120	125	5.0	T048
54#	BTX72S500	500	10	85	40m	40m	3.0	1.5m	125	2.0	15	1 4u	5 0	12u	100	120	125	5 0	T048
55#	T10N500C	500	10	85C	60m	20m	2 0	2 0m	125J	1 8	20	1.0u	10	20u§	50 §	140 §	125J	15	S131j%
56#	T10N500H	500	10	85C	60m	20m	2 0	2.0m	125J	1 8	20	1.0u	10	20u§	50 §	140 §	125J	15	M94e%
57#	TW10N500C	500	10	85C	60m	50m	3.0	2 0m	125J	1 7	10				5 0 §	100	125J	3 0	S131j%
58#	TW10N500H	500	10	85C	60m	50m	3.0	2.0m	125J	1.7	10				5 0 §	100	125J	3.0	M94e%
59#	CR10-502B	500 †	10	125C	150m	80m	3.0	5 0m	125C	2 0	10	2 0u	10	30u	20		125C	1 0	T048
60#	2SF205	500 ⧄	11	50B		40m	3 0	6 0m	100J	2.8	50					125	100J	500m	S236a
61#	2SF755	500	11	50B		40m	3 0	4 5m	100J	2.8	50		5.0	10u	20	125	125J	50	S18d
62#	2SF755A	500	11	50B		40m	3 0	4 5m	100J	2 8	50		5 0	5.0u	20	125	125J	50	S18d
63	UCR50	500 △	12	55C	50m	50m				1 2	3 0	450n	30	15u	250	60	125J	10 ⧄	S296
64#	CR8-501C	500 †	12	70C	15mØ	25m	2.5	2 5m	125J	2 0	20	1.1u	8 0	50u	20 △	80 △	125J	5 0 Ø	T064
65▼	TIC126E	500	12	70	40m	20m	1.5	2 0m	110C	1 4	12				100 Ø	100	110C	5 0	
66#	BTX65/500R	500	12	85B	10m§Ø	65m	3.5	6 0m	125J	2 0	50	400n	10	10u	100	200	125J	500m†	T048
67#	CR10-501B	500 †	12	85C	150m	80m	3 0	5.0m	125C	2.0	10	2.0u	10	30u			125C	1 0	T048
68#	CR10-502AB	500	12	85C	20mØ	80m	3.0	10m	125C	2 0	50	2 6u	32	20u⧄	20	120	125	5 0 Ø	
69#	CR10-502BB	500	12	85C	20mØ	80m	3 0	10m	125C	2 0	50	2.6u	32	15u⧄	20	120	125	5 0 Ø	
70#	CR10-502CB	500	12	85C	20mØ	80m	3 0	10m	125C	2 0	50	2.6u	32	12u⧄	20	120	125	5.0 Ø	
71#	CR10-502DB	500	12	85C	20mØ	80m	3.0	10m	125C	2.0	50	2.6u	32	8.0u⧄	20	120	125	5 0 Ø	
72#	CR10-502EB	500	12	85C	20mØ	80m	3.0	10m	125C	2.0	5 0	2 6u	32	6 0u⧄	20	120	125	5.0 Ø	
73#	CR10-5029B	500	12	85C	20mØ	80m	3.0	10m	125C	2.0	5 0	2 6u	32	4.0u⧄	20	120	125	5.0 Ø	
74#	8RCM50	500	12 6	65B	65m	85m	3 0	4 0m	105	2 6	8.0			20u	20	100	105	.50	T048
75#	8RCV50	500	12 6	105	50m	45m	2 9	4 0m	105	2.6			100	10u	100	100	105	.50	T048
76	2N1850B	500	13 △	80C		75m	3 7 $	1.0mØ	125C	1 8 †	13					150 *	125C	5 †	T048
77#	CR12-603RB	500	14.5	75C	28mØ	60m	3 0	5 0m†	125C	2.0	32	2 3u	20	85u	20	160	125	5 0	
78#	CR12-603RBA	500	14 5	75C	28mØ	60m	3 0	5.0m†	125C	2 0	32	2.3u	20	85u	200	160	125	5 0	
79	T515	500	15		60m	100m	5.0			2.2		3.0u				100	100J		M94
80	T515S	500	15		60m	100m	5 0			2.2		3 0u				100	100J		S131
81#	2SF139	500	15	25C		50m	3.0	3.0m	100C	1.2 △	7.0					100			S94
82#	BTY87/500R	500	15	61A	10mØ§	65m	3 5	6.0m	125J	3.0	50	3.0u§	10	15u	100	106	125J	.50	T048
83#	TAG15-500	500	15	70	50m	50m	3 0	1 5m	105	2.0	20					150	105	5.0	T048
84#	TAG15S500	500	15	70	50m	50m	3.0	5.0m	105	2.0	20			12u		150	105	5.0	T048
85#	BT101-500R	500	15 △	85B		10m	2 0	1.5m†	125J	2.3	20					55 §	125J	5.0 Ø	T064
86#	BT102-500R	500	15 △	85B		50m	2 5	1 5m†	125J	2 3	20					55 §	125J	5.0 Ø	T064
87#	BTX70-500	500	15	85	50m	50m	3 0	1.5m	125	2.0	20					150	125	5 0	T048
88#	BTX70S500	500	15	85	50m	50m	3.0	1.5m	125	2.0	20			12u		150	125	5.0	T048
89#	BTX74-500	500	15	85	50m	50m	3 0	1 5m	125	2.0	20	1.4u	10	20u	100	150	125	5 0	T048
90#	BTX74S500	500	15	85	50m	50m	3 0	1.5m	125	2.0	20	1.4u	10	12u	100	150	125	5.0	T048
91#	TR5	500	16	25A	50mØ	80m	3 0	3 0m	125J	2.0	50	2 0u§	10	50u§	50 Ø	250		240m	S313
92#	SF10H11	500	16	26S		80m	3 5	6.0m	100J	3 0	50					113	100	5.0	S18
93	2N689	500	16 △	65C		80m$	3.0 $	3 0mØ	125C	2.0 Ø	16					150 *	125C	50	T048
94	JAN2N689	500	16 △	65C	50m	80m	3 0	2.0m	25	2 0 †	50	5 0u	10	40u		150	125A	.5 †	T048
95	10RC50	500 ⧄	16 △	65C	10mØ	40m	3.0	3 0mØ	105C	2 3 †	31					125 △	105J	.50 †	T048
96	RTT0250	500	16	65C	200m	50m	3.0	2.0m	100	2.5	50	.20u	16		100	150	100C		T048
97	RTT0350	500	16	65C	50m	25m	2.0	1.0m	100	2.0	50	.20u	16		100	150	100C		T048
98	RTT0550	500	16	65C	200m	50m	3.0	2 0m	125	2 5	50	20u	16		100	150	125C		T048
99	RTT0650	500	16	65C	50m	25m	2.0	1.0m	125	2.0	50	20u	16		100	150	125C		T048
100	RTU0250	500	16	65C	20	50m	3.0	2 0m	100	2.5	50	200n	16		100	150	100C		S131
101	RTU0350	500	16	65C	50m	25m	2 0	1 0m	100	2 0	50	200n	16		100	150	100C		S131
102	RTU0550	500	16	65C	200m	50m	3.0	2.0m	125	2.5	50	200n	16		100	150	125C		S131
103	RTU0650	500	16	65C	50m	25m	2.0	1 0m	125	2.0	50	200n	16		100	150	125C		S131
104	MCR3818-7	500	16	70C	50m	40m	1 5			1 2	20	1 0u	20	15u	50 Ø§	240 §	100J	500m†	M94b
105	MCR3918-7	500	16	70C	50m	40m	1.5			1 2	20	1 0u	20	15u	50 Ø§	240 §	100J	500m†	S131k
106#	BTY91/500R	500	16	75B	10mØ§	40m	3.0	6.0m	125J	2 0	50	3 0u§	10	20u§	100	136	125J	5.0	T048
107#	11RC50	500	16 △	85B	20m	40m	3 0	3.0m		2 3	10	3 0u	10	25u	20	125	125A	5.0 Ø	S141c
108	C36E	500	16 △	100	20mØ	50m	3.5	3 0m	100J	1 2		4 5u⧄	10	20u		125	100B	.50	S18
109	16C50	500	16	125J	50m	15m	2 0	10m	125J	2 0	50	7.0u	16	75u§		150	125J	5.0 Ø	T048#△
110	16C50B	500	16	125J	50m	40m	2.0	10m	125J	2 0	50	7.0u	16	75u§	25	150	125J	5.0 Ø	T048#△

SYMBOLS AND CODES EXPLAINED IN INTERPRETER

6. SILICON CONTROLLED RECTIFIERS

IN ORDER OF (1) PEAK REV. VOLT., (2) MAX. CONT. CUR., (3) TEMPERATURE, (4) TYPE No.

LINE No.	4 TYPE No.	1 PRV and VBO (V)	MAX. CONT. CURRENT 2 Idc (A)	3 at TEMP (°C)	MAX. HOLD. CUR Ih @ 25°C (A)	MAX. GATE FIRING SPEC at 25°C Igf (A)	Vgf (V)	MAX SAT I Ir@PRV and Is@VBO (A)	at TEMP (°C)	MAX. FWD. VOLT. DROP at 25°C Vf (V)	@ If (A)	SWITCHING TIME at 25°C Ton (s)	for If (A)	Toff (s)	MIN. dV/dt @ 25°C (V/us)	ABS. MAX. RATINGS 1Cy PK SURGE I@25°C (A)	MAX TEMP (°C)	MAX GATE POWER (W)	DWG. No.
1	16C50C	500	16	125J	50m	40m	2.0	10m	125J	2.0	50	7 0u	16	75u§		150	125J	5.0 Ø	TO48#△
2#	CR16-502B	500 †	16	125C	120m	40m	3 0	5.0m	125C	2.0	16	2.0u	10	20u	20		125C	1.0	TO48
3#	T14F500C	500	17	85C	120m	50m	3 0	10m	125J	2.5	50	1.5u⊘	10	15u§	200 §	200 §	125J		S63g%
4#	T14F500E	500	17	85C	120m	50m	3.0	10m	125J	2.5	50	1.5u⊘	10	15u§	200 §	200 §	125J		M329%
5	2N689A	500	18 △	65C	50m$⊘	40m	3.0 $	1.0mØ	65C	2.1 †	18				100	250 *	125C	.5 †	TO48
6	TIX95	500	18	75C	40m	40m	3.5	1.0m	125	1.6	18				100		125C	5 Ø	M246
7#	12RCM50	500	18.8	65B	65m	85m	3.0	4.0m	105	2.2	12			20u	20	150	105	.50	TO48
8#	T15N500C	500	19	85C	200m	100m	3.0	10m	125J	2.5	50	2.5u⊘	10	80u§	20 §	300 §	125J		S63g%
9#	T15N500E	500	19	85C	200m	100m	3 0	10m	125J	2.5	50	2 5u⊘	10	80u§	20 §	300 §	125J		M351%
10#	BTX12/500R	500	20	25$	40m§	50m	3.0			3.5 §	175	4.0u§	10	10u§	20 §	250	125J	5.0	S182
11#	CR20A10	500	20	57C		50m	3.0	3.0m	100J	1.8	60					300 △	100J	5.0 Ø	S106b
12#	2SF299	500	20	58C	10mØ	50m	3.5	3.0mØ	100	1.3	20					300	100J	5 Ø	S106b
13#	2SF299A	500	20	58C	10mØ	50m	3.5	3.0mØ	100	1 3	20		20	15u⊘	100 △	300	100	5.0 Ø	S106b
14#	TAG20-500	500	20	60	50m	50m	3.0	1.5m	105	1.7	30					175	105	5.0	TO48
15#	TAG20S500	500	20	60	50m	50m	3 0	1.5m	105	1 7	30			12u		175	105	5.0	TO48
16	MCR649-7	500 ⊘	20	65C		80m	3.5	5.0m△	100	.70 Ø	13 §					260 △	100J	5 Ø	TO41
17#	BTX33-500	500	20	70	50m	50m	3.0	1 5m	125	1 7	30					175	125	5 0	TO48
18#	BTX33S500	500	20	70	50m	50m	3.0	1.5m	125	1.7	30			12u		175	125	5 0	TO48
19▼	C138E10E	500	20	70	150m	180	3 0	4.0m	125	4.0	100		10	10	200	200	125	40	TO48
20▼	C138E20E	500	20	70	150m	180	3.0	4.0m	125	4.0	100		10	20	200	200	125	40	TO48
21▼	C139E10E	500	20	70	150m	180	3.0	4.0m	125	4 0	100		10	10	200	200	125	40	TO48
22▼	C139E20E	500	20	70	150m	180	3.0	4 0m	125	4 0	100		10	10	200	200	125	40	TO48
23#	CR20EY10	500	20	74C		50m	3 0	6.0m	125J	2.5	60		20	15u⊘	100 △	300 △	125J	5.0 Ø	S106b
24#	6TW5	500	20	75C$	25m	50m	2.0	10m	100J	1.8 §	50	2.5u§	20	20u§		300	150S	2.0	
25#	CR16-501B	500 †	20	75C	120m	40m	3.0	5.0m	125C	2.0	16	2.0u	10	30u			125C	1.0	TO48
26#	CR16-502AB	500	20	75C	7 0mØ	60m	3 0	10m	125C	2.0	50	2.5u	50	20u⊘	20	160	125	5.0 Ø	
27#	CR16-502BB	500	20	75C	7.0mØ	60m	3.0	10m	125C	2.0	50	2 5u	50	15u⊘	20	160	125	5.0 Ø	
28#	CR16-502CB	500	20	75C	7 0mØ	60m	3.0	10m	125C	2.0	50	2.5u	50	12u⊘	20	160	125	5.0 Ø	
29#	CR16-502DB	500	20	75C	7.0mØ	60m	3.0	10m	125C	2.0	50	2.5u	50	8.0u⊘	20	160	125	5.0 Ø	
30#	CR16-502EB	500	20	75C	7.0mØ	60m	3.0	10m	125C	2.0	50	2.5u	50	6 0u⊘	20	160	125	5.0 Ø	
31#	CR16-5029B	500	20	75C	7.0mØ	60m	3 0	10m	125C	2.0	50	2 5u	50	4.0u⊘	20	160	125	5.0 Ø	
32#	BTX81-500R	500	20	85B	100m	80m	3.5			1.8	50						125J	1.0 †	S94a
33#	2SF210A	500 ⊘	22	64B		40m	3.0	6.0m	125J	2.0	50					150	125J	500m	S236a
34#	2SF765	500	22	64B		40m	3 0	4.5m	125J	2.0	50		10	10u	20	150	125	.50	S18d
35#	2SF765A	500	22	64B		40m	3.0	4.5m	125J	2.0	50		10	5.0u	20	150	125	.50	S18d
36▼	S0535C	500	22	80C	40m	25m	2.0	1 0m	100C	1.6	141	1.8u	2.0	25u§	30 §	325 §	125A	800m†	M607
37▼	S0535D	500	22	80C	40m	25m	2.0	1 0m	100C	1.6	141	1.8u	2.0	25u§	30 §	325 §	125A	800m†	S362
38#	TS535	500	22.5	25A	20mØ	80m	3.0	6.0m	125J	2 2	70	5.0u§	15	50u§	50 Ø§	250		240m	S313
39#	CR18-603RB	500	23	70C	28mØ	40m	3.0	5 0m†	125C	2 1	57	2.3u	20	85u	20	180	125	5.0	
40#	CR18-603RBA	500	23	70C	28mØ	40m	3.0	5.0m†	125C	2.1	57	2.3u	20	85u	200	180	125	5 0	
41#	T18F500C	500	23	85C	120m	50m	3.0	10m	125J	2.3	60	1 5u⊘	15	20u§	50 §	300 §	125J		S63g%
42#	T18F500E	500	23	85C	120m	50m	3.0	10m	125J	2 3	60	1.5u⊘	15	20u§	50 §	300 §	125J		M353%
43	MCR1718-7	500 △	25	$	6.0mØ	50m	7.0			1.3	25				100 Ø	100	125J	1.0 †	TO48
44#	2SF138	500	25	25C		50m	3.0	3 0m	125C	1.2 △	12					150	125	5 Ø	S94
45	C37E△	500	25 △	25C		80m	3.5	6.0m	105	2.3 †	30					125	105C	.50	TO48
46	10RC50A	500 ⊘	25 △	45C	10mØ	90m	2.5	3 0mØ	125C	2.8	50 †	3 0u	10	30u	25 §	200 △	125J	.50 †	TO48
47	10RCF50A	500 ⊘	25 △	45C	10mØ	90m	2.5	3.0mØ	125C	2.8	50 †	3.0u	10	12u§	25 §	200 △	125J	500m†	TO48
48#	SF16H11	500	25	57S		40m	3.0	6 0m	125J	1.9	50					135	125	5.0	S18
49#	2N689AS	500	25	60	50m	40m	3 0	1 5m	125	1 7	30	1 4u	10	12u	100	200	125	5.0	TO48
50#	2N689S	500	25	60	50m	40m	3 0	1.5m	125	1.7	30	1 4u	10	12u	25	200	125	5.0	TO48
51#	BTX73-500	500	25	60	50m	50m	3.0	1.5m	125	1.7	30	1.4u	10	20u	100	200	125	5.0	TO48
52#	BTX73S500	500	25	60	50m	50m	3.0	1.5m	125	1 7	30	1.4u	10	12u	100	200	125	5.0	TO48
53	TI3042	500 †	25 △	60C	130mØ	100m	4 0	3 0m	125C	2.5	25	2.5u	25	2.9u	200	200	125C	5 Ø	TO48
54	C34E1	500	25	70	50m	25m	1 5	1 0m	100	1.5	50		35	20u⊘	20	250	100J	5.0 Ø	M94
55	C34E2	500	25	70	50m	25m	1 5	1 0m	100	1 5	50		35	20u⊘	20	250	100J	5.0 Ø	S131
56#	21RC50	500	25 △	75B	20m	40m	3.0	3.0		2.2	16	3.0u	10	25u	20	150	125A	5.0 Ø	S141c
57	2N5808	500	25	80	100m$	120m$	4.0 $			1.6	35					200 §	115C	500m†	S18
58#	24TB5	500	25	84B		10	3.0	7 5m		2.3	31					180	125	1.0	S266
59#	26TB5	500	25	84B		10	3.0	7.5m		2.3	31					180	125	1 0	S63a
60	2N2579	500	25	85C		80m$	3.5 $	2.5mØ	125C	.70 §	16					260 §	125C	.50	TO41
61#	BTX82-500R	500	26	87B	.10	80m	3.5					5.0u		50u		550 *	125J	5.0 Ø	TO48
62#	T22N500C	500	28	85C	200m	100m	3.0	10m	125J	1 9	60	2 5u⊘	20	80u§	20 §	400 §	125J		S63g%
63#	T22N500E	500	28	85C	200m	100m	3.0	10m	125J	1.9	60	2.5u⊘	20	80u§	20 §	400 §	125J		M353%
64#	BTX13/500R	500	30	25$	40m§	50m	3.0			3 5 §	250	4 0u§	10	6.0u§	20 §	300	125J	5.0	S189
65#	23TB5	500	31	82B	150m	100m	3.0	7 5m		2.4	63					260	125C	1.0	S266
66#	25TB5	500	31	82B	150m	100m	3 0	7 5m		2 4	63					260	125C	1 0	S63a
67#	CR25-501B	500	32	25	26m	40m	3.0					2 5u	25	150u		210	125	5.0	TO48
68#	8TW5	500	32	75C$	25m	50m	2.0	10m	100J	1.8 §	90	2 5u§	32	20u§		550	150S	2.0	
69#	BTX66/500R	500	32	85B	10mØ§	80m	3.0	12m	125J	3 3	500	50u	50	15u	22	680 *	125J	1 †	TO94
70	C40E△	500	35	18B		40m	3.0	3 5m△	25J	2 0 △	50			12u		150	125J	5.0	TO48
71	C137E	500	35 △	18C	100m	40m	3.0 §	3.5m	120C	2.3	70				100	360	120J	2.0	TO48
72	SCR165A	500 ⊘	35	25C	50m	25m	2.0	2.0m△	125C	2.0	50	1.0u§	200	20u§		200 §	125J	15	TO48
73	SCRF165A	500 ⊘	35	25C	100m	25m	2.0	2 0m△	125C	2.0	50	20u§	10	6 0u§		200 §	125J	15	TO48
74	SCRF1650	500 ⊘	35	25C	100m	40m	3.0	2.0m△	125C	2 0	50	2 0u§	10	12u§		200 §	125J	15	TO48
75	16RC50A	500 ⊘	35 △	35C	20mØ	40m	2.0	3.0mØ	125C	2 3	70 †		10	75u§	25 §	250 △	125J	50 †	TO48
76	16RCF50A	500 ⊘	35 △	35C	20mØ	40m	2.0	1.0mØ	125C	2.3	70 †		10	12u§	25 §	250 △	125	.50 †	TO48
77	18RC50	500 ⊘	35 △	45C	20mØ	40m	2.0	3 0mØ	125C	2 0	70 †					350 △	125J	.50 †	TO48
78	MCR3835-7	500	35	47C	50m	40m	1.5			1 2	35	1 0u	35	15u	50 Ø§	325 §	100J	500m	M94b
79	MCR3935-7	500	35	47C	50m	40m	1.5			1.2	35	1.0u	35	15u	50 Ø§	325 §	100J	500m	S131k
80	C38E△	500 ⊘	35	56C	80m	40m	3.0	3 0m	25J	2.0 △	50	1 4u	5.0	24u	20	150	150C	12	TO48
81	NL570E	500	35	62	100m	80m	3.0			1 7	50	1.4u	5.0	30u	200	600	125	500m	
82▼	C144E15E	500	35 △	63	125	150	3.0	4 0	125	3.0	100		10	15	200	250	125	40	TO48
83▼	C144E30E	500	35 △	63	125	150	3.0	4 0	125	3 0	100		10	30	200	250	125	40	TO48
84	22RC50	500 ⊘	35 △	70C	20mØ	40m	2.0	3.0mØ	150C	2.3	70 †				20	225 △	150J	500m†	TO48
85#	TK5FA	500	35	85C		300m	3.0	10m	125J	2.0	100	3.0u§	100	20u§	100 §	700		900m	S317
86#	TK5FB	500	35	85C		300m	3.0	10m	125J	2 0	100	3.0u§	100	40u§	100 §	700		900m	S317
87	C38E⊘	500	35	87C	80m	40m	2.5	2 0m	150J	2.0 †	50	1.4u	5.0	24u§	20	200	150J	.50 †	TO48
88	NLC38E	500	35	90C	80m	40m	2.5	2.0m	150J	2 0	50	1.4u	5.0	24u	20	200	150J	.50 †	TO48
89▼#	5TCA50	500	35	125	60	100m	3.0							100u	100 §	1 5k	125	10	
90	35C50	500	35	125J	200m§	200m	3 0	10m	125J	2.5	220	10u	35	40u§		900	125J	15 Ø	TO94#△
91	35C50B	500	35	125J	200m§	200m	3.0	10m	125J	2 5	220	10u	35	40u§	100	900	125J	15 Ø	TO94#△
92	35C50BF	500	35	125J	200m§	200m	3.0	10m	125J	2 5	220	10u	35	40u§	100	900	125J	15 Ø	TO83#△
93	35C50F	500	35	125J	200m§	200m	3.0	10m	125J	2.5	220	10u	35	40u§		900	125J	15 Ø	TO83#△
94#	CR30-503A	500	36	25	66m	60m	3.0			1.4	30	20u	30	73u		500	125	5.0	TO49
95#	CR30-504A	500	36	25	66m	60m	3.0			1.4	30		30	20u		500	125	5 0	TO49
96#	CR30-604AA	500	38	70C	20mØ	80m	3.0	10m†	125C	2.5	100	20u	100	20u⊘	20	660	125	5.0 Ø	TO49
97#	CR30-604BA	500	38	70C	20mØ	80m	3.0	10m†	125C	2 5	100	20u	100	15u⊘	20	660	125	5 0 Ø	TO49
98#	CR30-604CA	500	38	70C	20mØ	80m	3.0	10m†	125C	2.5	100	20u	100	12u⊘	20	660	125	5.0 Ø	TO49
99#	CR30-604DA	500	38	70C	20mØ	80m	3 0	10m†	125C	2.5	100	20u	100	8 0u⊘	20	660	125	5.0 Ø	TO49
100▼#	6TC50	500	40			100m	3.0			1 3		10u		150u	50 §Ø	1 5k*	125J		S183a
101#	27TB5	500	40	74B		.10	3.0	15m		2 1	78					450	125C	1 0	S63a
102#	CR24-603RB	500	40	80C	28mØ	40m	3.0	5 0m†	125C	1.4	50	2.3u	20	85u	20	320	125	5.0	
103#	CR24-603RBA	500	40	80C	28mØ	40m	3.0	5 0m†	125C	1 4	50	2.3u	20	85u	200	320	125	5.0	
104#	T30F500C	500	40	85C	300m	100m	3.0	10m	125J	1.8	100	2.0u⊘	25	25u§	50 §	800 §	125J		S63g%
105#	T30F500E	500	40	85C	300m	100m	3.0	10m	125J	1 8	100	2.0u⊘	25	25u§	50 §	800 §	125J		M351%
106♦	40RCS50	500 ⊘	40	87C	200m	110m	3 0	1 5m	105J	1 7 †	40	4 5u	10		25 §	1 0k§	105J	500m†	S363
107▼#	6TCA50	500	40	125	60	100m	3 0							100u	100 §	1 5k	125	10	
108	251K	500	40	125J		100m	3 0	10m	125J	1.7	50	4 0u	50	100u	300	1 2k*	125J	3 †	Z59
109	NLE45E	500	45	89C	10	70m	2 5	4 0m	125J	3.0	500	5.0u	50	30u	200	1.2k	125J	50 †	TO83
110	NLE46E	500	45	89C	10	70m	2 5	4 0m	125J	3 0	500	5.0u	50	30u	200	1 2k	125J	.50 †	TO94

SYMBOLS AND CODES EXPLAINED IN INTERPRETER

6. SILICON CONTROLLED RECTIFIERS

IN ORDER OF (1) PEAK REV. VOLT., (2) MAX. CONT. CUR., (3) TEMPERATURE, (4) TYPE No.

LINE No	4 TYPE No	1 PRV and VBO (V)	MAX. CONT. CURRENT 2 Idc (A)	3 at TEMP (°C)	MAX. HOLD. CUR Ih @ 25°C (A)	MAX. GATE FIRING SPEC at 25°C Igf (A)	Vgf (V)	MAX SAT I Ir@PRV and Is@VBO (A)	at TEMP (°C)	MAX. FWD. VOLT. DROP at 25°C Vf (V)	@ If (A)	SWITCHING TIME at 25°C Ton (s)	for If (A)	Toff (s)	MIN. dV/dt @ 25°C (V/us)	ABS. MAX. RATINGS 1Cy PK SURGE I@25°C (A)	MAX TEMP (°C)	MAX GATE POWER (W)	DWG. No.
1#	28TB5	500	47	73B		10	3 0	15m		1.9	95					550	125	1 0	S63a
2#	BTY95/500R	500	50	75B	10mØ§	80m	3 0	12m	125J	3.3	500	3 0u	50	20u	10	680	125J	5.0	TO49
3	C146E	500	55 △			100m	3 0							40u☑			125A		S236
4#	TK5△	500	55	60C	100m	125m	3 0	10m		2 0	100	5.0u	50	30u	20 Ø	700	100C	.50	TO49
5#	2SF120	500 ☑	55	68B		400m	3.5	12m	100J	2.7	500					700	100J	.50	S106a
6#	2SF775	500	55	68B		100m	3 5	12m	100J	2.7	500		30	30u	20	700	100	50	S189d
7#	2SF775A	500	55	68B		100m	3 5	12m	100J	2 7	500		30	15u	20	700	100	50	S189d
8#	29TB5	500	55	68B		10	3 0	15m		1 8	110					650	125	1.0	S63a
9	NL576E	500	55	82	500m	150m	3.0			2.4	110				50	700	125	2.0	
10	NL577E	500	55	82C	.50	15	3 0	6 0m	125J	2.4	110				200	700	125J	2 0 †	TO103
11	C45E△	500	55 △	85C	100m	75m	3 0	5.0m	120C	3.1 △	500	5 0u	50	30u§	20 §	700	125J	500m	S315
12	C46E△	500	55 △	85C	100m	75m	3 0	5.0m	120C	3.1 △	500	5 0u	50	30u§	20 §	700	125J	500m	TO94
13	2191K	500	55	94C		200m	3 0	10m	125J	2.0 §	50	3.5u	50	15u	100	1 2k*	125J	3 †	Z59
14	2192K	500	55	94C		200m	3 0	10m	125J	2.0 §	50	8.0u	50	20u	100	1 2k*	125J	3 †	Z59
15	555E	500	55	99C		150m	3.0								200		125J		TO49
16	556E	500	55	99C		150m	3.0								200		125J		TO83
17#	5TC50	500	55	125	20m	45m	3 0			1 3	50	5.0u	50	25u		500	100J	20	S185
18	C145E	500	55 △	125J	500m	150m	3 0	10m	125C	2.4 †	110				200	700 △	125J	2 †	TO103
19#	ATS50	500	60	25		100m	2 0									600	125	5 0	TO49
20#	T6N500C	500	60	85C	60m	20m	2 0	2.0m	125J	2.5	20	1 0u	10	17u§	50 §	100 §	125J	15	S131j%
21#	BTX67/500R	500	62	85B	10mØ			12m	125J	2.5	500	.50u	50	15u	22	900	125J	1 †	TO94
22#	T50F500	500	62.5	85C	300m	100m	3.0	20m	125J	2.2	160	2.0u☑	25	30u§	50 §	800 §	125J		M330b%
23#	T50N500	500	62.5	85C	300m	100m	3 0	20m	125J	2.2	160	2 5u☑	25	80u§	20 §	800 §	125J		M330b%
24	2515K	500	63	120C		.10	3.0	15m	150J	1.7	50				300	1.2k	150J		TO83
25#	CR50-503A	500	64	25	73m	100m	3.0									600	125	5 0	TO49
26#	CR50-504A	500	64	25	73m	100m	3.0					5.5u	50	20u		600	125	5 0	TO49
27#	40T6	500	65	75B	200m	200m	.25	10m†		2 1 †	200					1.1k	125B	1.0	M308
28#	CR50-604AA	500	66	75C	32mØ	60m	3.0	10m†	125C	1.7	150	5.5u	150	20u☑	20	760	125	5 0 Ø	TO49
29#	CR50-604BA	500	66	75C	32mØ	60m	3 0	10m†	125C	1 7	150	5.5	150	15u☑	20	700	125	5 0 Ø	TO49
30#	CR50-604CA	500	66	75C	32mØ	60m	3 0	10m†	125C	1 7	150	5.5	150	12u☑	20	760	125	5.0 Ø	TO49
31#	CR50-604DA	500	66	75C	32mØ	60m	3 0	10m†	125C	1.7	150	5 5	150	8.0u☑	20	760	125	5.0 Ø	TO49
32#	CR50-604LA	500	66	75C	32mØ	60m	3 0	10m†	125C	1.7	150	5.5u	150	25u☑	20	760	125	5 0 Ø	TO49
33	2N1805	500	70	62C		130m$	3.0 $	3.3m	62C	1.8 †	70					1 0k*	125C	.50 †	TO49
34	2N3986	500	70	70C		200m$	3 0 $	15m	125C	2.9 †	220			50u	200 §	1 0k*	125C	10 Ø	TO94
35#	CR70B10	500	70	74C		70m	3.0	6.0m	125J	1.7	220				10 △	1.5k△	125J	5.0 Ø	S189d
36#	36TB5	500	70	75B		15	3 0	15m		2.0	140					760	125	1.0	S63d
37#	CR70CY10	500	70	83C		100m	3.0	15m	125J	1.8 †	220			15 §	100 §	1.5k	125J	5 0 Ø	S237f
38#	BTY99/500R	500	70	85B	10mØ§	70m	3 0	12m	125J	2.5	500	3 0u	50	20u	10	900	125J	5.0	TO49
39#	TK150FA	500	70	85C		300m	3 0	10m	125J	2.0	200	3.0u§	100	20u§	100 §	1.0k		900m	S317
40#	TK150FB	500	70	85C		300m	3 0	10m	125J	2 0	200	3.0u§	100	40u§	100 §	1.0k		900m	S317
41	NLC60E	500	70	103C	10	70m	2 5	4.0m	150J	2 5	500	5.0u	50	50u		1 6k	150J	.50 †	TO94
42▼#	10TCA50	500	70	125	100	100m	3 0							100u	100 §	1 5k	125	10	
43	70C50	500	70	125J	200m§	200m	3.0	10m	125J	1.8	220	10u	70	40u§		1 6k	125J	15 Ø	TO94#△
44	70C50B	500	70	125J	200m§	150m	3.0	10m	125J	1 8	220	10u	70	40u§	100	1 6k	125J	15 Ø	TO94#△
45	70C50BF	500	70	125J	200m§	150m	3 0	10m	125J	1.8	220	10u	70	40u§	100	1 6k	125J	15 Ø	TO94#△
46	70C50F	500	70	125J	200m§	200m	3 0	10m	125J	1 8	220	10u	70	40u§		1.6k	125J	15 Ø	TO83#△
47	BTX37/500R	500	75		10mØ	80m	3 0			3 3	500	3.0u	50	20u		680	125J	500m	TO49
48#	SH50H11	500	79	85C	150m	100m	3 0	8.0m	125J	1.7 §	150	6.0u	50	20u§	100	1.0k	125J	.50 †	S189f
49▼#	12TC50	500	80		100m	100m	3.0			1 5		10u		150u	50 §	1 5k*	125J		S183b
50#	CR31-603A	500	80	55C	38mØ	60m	3 0	10m†	125C	1 7	100	3.7u	100	130u	20	700	135J	5.0 Ø	TO49
51#	CR31-604AA	500	80	55C	38mØ	60m	3 0	10m†	125C	1 7	100	5.7u	100	20u☑	20	700	135J	5 0 Ø	TO49
52#	CR31-604BA	500	80	55C	38mØ	60m	3.0	10m†	125C	1.7	100	5.7	100	15u☑	20	700	135J	5.0 Ø	TO49
53#	CR31-604CA	500	80	55C	38mØ	60m	3 0	10m†	125C	1 7	100	5 7	100	12u☑	20	700	135J	5 0 Ø	TO49
54#	CR31-604DA	500	80	55C	38mØ	60m	3.0	10m†	125C	1 7	100	5 7u	100	8 0u☑	20	700	135J	5 0 Ø	TO49
55	36RA50	500 ☑	80 △	75C	500m	150m	2.5	15m	125C	2.2 †	160				200 §	1.0k△	125J	2.0 †	TO94
56	36RC50A	500 ☑	80 △	75C	20 Ø	700m	2.5	3.0mØ	125C	2 2 †	160					850 △	125J	2.0 †	TO94
57	36RCF50A	500 ☑	80 △	75C	20 Ø	700m	2 5	3 0m	125C	2.2 †	160		50	20 §		850 △	125J	2.0 †	TO94
58	37RA50	500 ☑	80 △	75C	500m	150m	2 5	15m	125C	2 2 †	160				200 §	1 0k△	125J	2.0 †	TO83
59	37RC50A	500 ☑	80 △	75C	20 Ø	700m	2.5	3.0mØ	125C	2 2 †	160					850 △	125J	2.0 †	TO83
60	37RCF50A	500 ☑	80 △	75C	20 Ø	700m	2 5	3.0m	125C	2.2 †	160			20 §		850 △	125J	2.0 †	TO83
61	51RCG50	500 ☑	80 △	75C	100m	150m	2 5	15mØ	125C	2 5 †	160			20u	100 §	1.2k△	125J	3.0 †	TO94
62	52RCG50	500 ☑	80 △	75C	100m	150m	2 5	15mØ	125C	2.5 †	160			20u	100 §	1.2k△	125J	3.0 †	TO83
63#	2SF130	500 ☑	80	78B		100m	3.5	12m	125J	2.3	500					1 0k	125J	50	S189d
64#	2SF785	500	80	78B		100m	3.5	12m	125J	2 3	500		50	30u	20	1 0k	125	.50	S189d
65#	2SF785A	500	80	78B		100m	3 5	12m	125J	2.3	500		50	15u	20	1.0k	125	50	S189d
66#	51RC50	500	80 △	84B	50m	70m	2 5	3.0		2.2	50	4 5u	50	60u	20	700	125A	5.0 Ø	S237c
67▼#	12TCA50	500	80	125	100	100m	3 0							100u	100 §	1 5k	125	10	
68	250K	500	80	125J		100m	3 0	10m	125J	1.3	50	4 0u	50	100u	300	1 6k*	125J	3 †	Z59
69#	37TB5	500	85	66B		15	3.0	15m		1.9	175					930	125	1 0	S63d
70#	CR70-601A	500 †	85	75C		100m	3 0	15m	25C	1.7	70				20	1.0k	125C	1.0	TO49
71#	CR70-601C	500	85	75C		100m	3 0	30m†	125C	1 7	210				20	1.0k	125	5.0	M376
72#	BTX51-500R	500	95	85B	10m§Ø	70m	3 0	13m	125J	2.1	500	3.0u	50	20u	10	900	125J	5.0	TO49
73#	TT5FA	500	95	85C		500m	3 0	25m	125J	2 0	350	3 0u§	100	20u§	100 §	2.0k		1 5	S204a
74#	TT5FB	500	95	85C		500m	3 0	25m	125J	2 0	350	3.0u§	100	40u§	100 §	2 0k		1.5	S204a
75#	BTX38/500R	500	100		10mØ	70m	3 0			2.5	500	3.0u	50	20u		1 0k	125J	.50	TO49
76#	38TB5	500	100	62B		15	3 0	15m		1 8	205					1 0k	125	1.0	S63d
77	C62E☑	500	100	100C	100m	70m	2 5	4 0m	125J	2 5 †	500	5.0u	50	50u§		1 6k	150J	.50 †	TO83
78	100C50	500	100	125J	200m	200m	2 5	25m	125J	2 0	500	10u	100	40u§		2 0k	125J	10 Ø	TO93#△
79	100C50B	500	100	125J	200m	200m	2 5	25m	125J	2 0	500	10u	100	40u§	100	2 0k	125J	10 Ø	TO93#△
80#	CR51-603A	500	105	55C	38mØ	60m	3 0	10m†	125C	1.6	150	3.4u	120	185u	20	760	135J	5.0	TO49
81	C154E△	500	110 △		500m	500m	4.0	12m	25C	3 0 †	500 †		50	7 0u§	200 §	1 2k	125J	2.0 Ø	TO94
82	C155E△	500	110 △		500m	500m	4.0	12m	25C	3.0 †	500 †		50	12u§	100 §	1 2k	125J	2.0 Ø	TO94
83	C156E△	500	110 △		500m	500m	4 0	12m	25C	3 0 †	500 †		50	7.0u§	200 §	1.2k	125J	2.0 Ø	S315
84	C157E△	500	110 △		500m	500m	4.0	12m	25C	3 0 †	500 †		50	12u§	100 §	1.2k	125J	2.0 Ø	S315
85	2541K	500	110	50C		200m	3.0	10m	125J	1.7 §	50	3 5u	50	15u	100	1 4k	125J	3.0 †	Z59
86♦	JAN2N1799	500	110	60C	40m	70m	3.0	15m	125A	1 8	150	15u	50	40u		1.0k	125A	500m	TO83
87♦	JAN2N1805	500	110	60C	40m	70m	3.0	15m	125A	1.8	150	15u	50	40u		1.0k	125A	500m	TO49
88#	10TC50	500	110	60C	20m	60m	3.0			1 5	110	2.0u	110	25u	20	1 0k	125J		S185
89	2542K	500	110	60C		200m	3.0	10m	125J	1 7 §	50	8.0u	50	20u	100	1.4k	125J	3.0 †	Z59
90	C50E	500	110 △	60B	100m	75m	3 0	6 0m△	125J	2.5	500	5 0u	50	30u§	20 §	1.0k	125	500m	TO94
91	C52E	500	110 △	60B	100m	75m	3 0	6.0m△	125J	2.5	500	5.0u	50	30u§	20 §	1.0k	125	500m	S315
92	C55E△	500	110 △	60C	100m	75m	3.0	10m	125J	2.5 △	500	5.0u	50	30u§	20 §	1 0k	125J	5.0	S91
93	C56E△	500	110 △	60C	100m	75m	3.0	10m	125J	2.5	500	5.0u	50	30u§	20 §	1 0k	125J	5.0	S108
94	C150E☑	500	110	60B	500m	150m	3 0	10m	125J	2.5	500				200	1.5k	125J	10	TO49
95#	TK150	500	110	60C	100m	125m	3.0	10m		2 0	200	4 5u	50	20u	40 §Ø	1 0k	125C	.50	TO49
96	71RC50A	500 ☑	110 △	62C	20mØ	70m	2 5	3.0mØ	125J	1.9 †	220		50	30u§		1.0k△	125J	.5 †	TO94
97	71RCF50A	500 ☑	110 △	62C	20mØ	70m	2 5	3.0mØ	125J	1 9 †	220		50	20u§	25 △	1 0k△	125J	.50 †	TO94
98	72RC50A	500 ☑	110 △	62C	20mØ	70m	2 5	3 0mØ	125J	1.9 †	220		50	30u§		1.0k△	125J	.5 †	TO83
99	72RCF50A	500 ☑	110 △	62C	20mØ	70m	2 5	3 0mØ	125J	1.9 †	220		50	20u§	25 △	1.0k△	125J	500m†	TO83
100	71RB50	500 ☑	110 △	65C	500m	150m	2 5	15m	125J	2 5 †	220	2.0u	50	30u§	200 △	1.2k△	125J	2 †	TO94
101	72RB50	500 ☑	110 △	65C	500m	150m	2 5	15m	125J	2.5 †	220	2.0u	50	30u§	200 △	1.2k△	125J	2 †	TO83
102	C150E△	500	110 △	70C	500m	150m	3.0	20m	120C	2 6	500	8.0u	50	100u§	200	1 5k	125J	10	TO94
103	C151E△	500	110 △	70C	500m	150m	3 0	20m	120C	3 5	500	8.0u	50	50u§	200	1.0k	125J	10	S91
104	C152E△	500	110 △	70C	500m	150m	3 0	20m	120C	2.6	500	8.0u	50	100u§	200	1.5k	125J	10	S315
105	C153E△	500	110 △	70C	500m	150m	3 0	20m	120C	3.5	500	8.0u	50	50u§	200	1.0k	125J	10	S108
106	71RCG50	500 ☑	110 △	75C	100m	150m	2 5	15mØ	125C	2 4 †	220			15u	100 §	1.4k△	125J	3.0 †	TO94
107	72RCG50	500 ☑	110 △	75C	100m	150m	2 5	15mØ	125C	2 4 †	220			15u	100 §	1.4k△	125J	3 0 †	TO83
108#	71RC50	500	110 △	79B	50m	70m	2.5	3.0m		1 9	70	4.5u	50	70u	20	1 0k	125A	5 0 Ø	S237c
109	71RA50	500 ☑	110 △	80C	500m	150m	2.5	15m	125J	1 9 †	220	2.0u	50	50u§	200 △	1.6k△	125J	2 †	TO94
110	72RA50	500 ☑	110 △	80C	500m	150m	2.5	15m	125J	1.9 †	220	2.0u	50	50u§	200 △	1.6k△	125J	2 †	TO83

SYMBOLS AND CODES EXPLAINED IN INTERPRETER

6. SILICON CONTROLLED RECTIFIERS

IN ORDER OF (1) PEAK REV. VOLT., (2) MAX. CONT. CUR., (3) TEMPERATURE, (4) TYPE No.

LINE No.	4 TYPE No	1 PRV and VBO (V)	MAX. CONT. CURRENT 2 Idc (A)	3 at TEMP (°C)	MAX. HOLD CUR Ih @ 25°C (A)	MAX. GATE FIRING SPEC at 25°C Igf (A)	Vgf (V)	MAX SAT I Ir@PRV and Is@VBO (A)	at TEMP (°C)	MAX. FWD. VOLT. DROP at 25°C Vf (V)	@ If (A)	SWITCHING TIME at 25°C Ton (s)	for If (A)	Toff (s)	MIN. dV/dt @ 25°C (V/us)	ABS. MAX. RATINGS 1Cy PK SURGE I@25°C (A)	MAX TEMP (°C)	MAX GATE POWER (W)	DWG. No.
1	NLE151E	500	110	80C	50	15	2 5	8 0m	125J	2 6	500	8 0u	50	50u	200	1 4k	125J	2 0 †	T094
2	NLE153E	500	110	80C	.50	15	2 5	8 0m	125J	2 6	500	8 0u	50	50u	200	1 4k	125J	2 0 †	T083
3	NLF151E	500	110	80C	500m	150m	2.5	8 0m	125J	2 6 †	500	8.0u	50	50u∅	200	1 4k	125J	2.0 †	T094
4	NLF153E	500	110	80C	500m	150m	2 5	8 0m	125J	2.6 †	500	8.0u	50	50u∅	200	1 4k	125J	2 0 †	T094
5	NLE155E	500	110	83C	50	15	2 5	8 0m	125J	3 0	500	5 0u	50	20u	200	1.4k	125J	2 0 †	T094
6	NLE157E	500	110	83C	.50	15	2 5	8.0m	125J	3.0	500	5 0u	50	20u	200	1 4k	125J	2 0 †	T083
7	NLF154E	500	110	83C	500m	200m	2 5	8 0m	125J	3 0 †	500	5 0u	50	10u∅	200	1 4k	125J	2 0 †	T094
8	NLF155E	500	110	83C	500m	200m	2 5	8 0m	125J	3.0 †	500	5 0u	50	20u∅	200	1 4k	125J	2 0 †	T094
9	NLF156E	500	110	83C	500m	200m	2 5	8.0m	125J	3 0 †	500	5.0u	50	10u∅	200	1 4k	125J	2.0 †	T083
10	NLF157E	500	110	83C	500m	200m	2 5	8.0m	125J	3.0 †	500	5 0u	50	20u∅	200	1 4k	125J	2.0 †	T083
11	NLF158E	500	110	83C	500m	150m	2 5	8 0m	125J	3.0 †	500	5 0u	50	40u§	200	1.4k	125J	2 0 †	T094
12	NLF159E	500	110	83C	500m	150m	2 5	8 0m	125J	3 0 †	500	5 0u	50	40u∅	200	1 4k	125J	2 0 †	T083
13	71RC50B	500 ∅	110 △	85C	20m∅	70m	2 5	4 0m∅	150J	2.2 †	220		50	40u§		1 0k△	150J	.5 †	T094
14	72RC50B	500 ∅	110 △	85C	20m∅	70m	2 5	4 0m∅	150J	2 2 †	220		50	40u§		1 0k△	150J	5 †	T083
15	C60E△	500	110 △	87C	100m	75m	3 0	9 0m	145C	2 5 △	1.5k	5.0u	50	50u		1 0k	150J	500m	T094
16	C62E△	500	110 △	87C	100m	75m	3 0	9 0m	145C	2 5 △	1 5k	5 0u	50	50u		1 0k	150J	500m	S315
17	NLE150E	500	110	89C	.50	15	2 5	4 0m	125J	2 6	500	8 0u	50	150u	200	1 6k	125J	2 0 †	T094
18	NLE152E	500	110	89C	50	15	2.5	4 0m	125J	2 6	500	8 0u	50	150u	200	1 6k	125J	2 0 †	T083
19	NLH150E	500	110	89C	.50	15	2 5	4.0m	125J	2.6	500	8 0u	50	150u	200	1 6k	125J	2 0 †	T094
20	NLH152E	500	110	89C	50	15	2.5	4 0m	125J	2.6	500	8 0u	50	150u	200	1 6k	125J	2.0 †	T083
21	NLC150E	500	110	90C	50	15	2 5	10m	125J	2 6	500	8 0u	50	100u	200	1 8k	125J	2.0 †	T049
22	NLC152E	500	110	90C	50	15	2 5	10m	125J	2 6	500	8 0u	50	100u	200	1 8k	125J	2.0 †	T083
23	NLC350E	500	110	90C	50	15	2 5	8 0m	125J	2 6	500	8 0u	5.0	100u	200	1 8k	125J	2 0 †	M456
24	C60E∅	500	110	100C	100m	70m	2 5	4 0m	125J	2.5 †	500	5 0u	50	50u§		1 6k	150J	50 †	T049
25	NLC62E	500	110	103C	10	70m	2 5	4 0m	150J	2 5	500	5 0u	50	50u		1 6k	150J	50 †	T083
26	C158E	500	110 △	125J	500m	150m	3 0	15m	125C	3 5 †	500				200 §	1 2k△	125J	2 0 ∅	T094
27	C159E	500	110 △	125J	500m	150m	3 0	15m	125C	3.5 †	500				200 §	1 2k△	125J	2.0 †	S315
28#	T95F500	500	115	85C	300m	100m	3 0	30m	125J	1.8	300	2 5u∅	50	30u§	50 §	2 0k§	125J		M330a%
29#	2SF347	500	120	25C		100m	3 0	8 0m	125C	1 2 △	60					1 0k	125	10 ∅	S142
30#	CR100-601C	500 △	124	80C		100m	3 0	15m	25C	1 7	100				20	1 2k	125C	1.0	M376
31#	CR100-601D	500	125	80C	30m∅	100m	3 0	30m†	125C	1.7	300			100	20	1 5k	125	5 0	T049
32	2505K	500	125	95C		10	3 0	15m	150J	1 3	50				300	1 6k	150J		T083
33#	SH80H11	500	126	85C	200m	150m	3 0	15m	125	1.7 §	250	6 0u	80	20u§	100	1 6k	125J	50 †	S267b
34#	42TB5	500	135	57B		20	3 0	15m		2 2	265					1 4k	125	1 5	M308
35♦#	30TC50	500	140		150m	100m	3 0			1 5					50 §∅	3 5k*	125J		S348
36▼#	20TCA50	500	140	125	150	100m	3 0							100u	100 §	3 0k	125	10	
37#	TT5	500	150	60C	300m	500m	3 0	25m	100J	2.2	350	5 0u	15		20 §∅	2 0k	100C	1 0	S204
38	2N2508	500	150 △	80C	50m	150m$	3 0 $	6 0m	80C	1 4 †	150					3 5k*	125C	20 †	T093
39	2N2547	500	150	80C	50m§	150m§	3 0 §	7 5m	80C	1.5	150				4 0	3 5k§	125C	2 0 †	T093
40#	CR150BX10	500	150	81C		300m	3 0	15m∅	125J	1 9	500			30u∅	100 △	4 0k	125J	16 ∅	S237a
41#	CR150BY10	500	150	81C		300m	3 0	15m∅	125J	1 9	500			15u	100 △	4 0k	125J	16 ∅	S237a
42#	FT150BX10	500	150	81C		300m	3 0	15m	125J	1 9	500		150	30u∅	100 △	4 0k△	125J	16 ∅	M567
43#	FT150BY10	500	150	81C		300m	3 0	15m	125J	1.9	500		150	150u∅	100 △	4 0k△	125J	16 ∅	M567
44#	TT250FA	500	150	85C		500m	3 0	25m	125J	2.0	450	3 0u§	100	20u§	100 §	3 2k		1 5	S204a
45#	TT250FB	500	150	85C		500m	3 0	25m	125J	2 0	450	3.0u§	100	40u§	100 §	3 2k		1 5	S204a
46	150C50	500	150	125J	200m	200m	2 5	25m	125J	1 7	500	10u	150	40u§		3 0k	125J	10 ∅	T093#△
47	150C50B	500	150	125J	200m	200m	2 5	25m	125J	1.7	500	10u	150	40u§	100	3 0k	125J	10 ∅	T093#△
48	101RA50	500 ∅	160	80C	50	15	2 5	20m	125C	2.1	320 †				200 §	2 5k§	125J	2 0 †	T093
49	101RC50	500 ∅	160 △	80C	50m∅	150m	2 5	6 0m∅	125J	1.7 †	314		150	25u§		2.0k△	125J	2 †	T093
50♦	115PA50	500 ∅	170 △	85C	500m	150m	2 5	15m	125C	2 3 †	340				200 §	1 6k△	125J	2 0 †	Y200b
51#	43TB5	500	175	62B		20	3 0	15m		2 2	390					1.9k	125	1 5	M308
52▼#	2SF1145	500	175	75C		300m	3 0	15m	125J	1 7 §	500				100 △	4 0k△	125J	16 ∅	S237e
53#	CR150F10	500	175	75C		300m	3 0	15m	125J	1 7 §	500				100 §	4 0k	125J	16 ∅	S237e
54	2N3889	500	175	80	200m	400m	4 0	15m	125	1 8	175					4 5k	125	3 0	T093
55	C350E	500	175	80C	500m	150m	3 0	10m	25	2.6	500	8 0u	50	100u	200	1 5k	120C	2 0	M514
56	2201K	500	175	125J		300m	4 0	15m	125J	1 3 §	100	4 0u	100	30u	100	4.0k*	125J	3 0 †	T093
57	2202K	500	175	125J		300m	4 0	15m	125J	1 3 §	100	8 0u	100	40u	100	4.0k*	125J	3 0 †	T093
58	C358E	500	180 △	125J	500m	150m	3 0	15m	125C	3 5	500	2 0u	50	30u∅	200	1 2k	125J	2 0	M514
59#	46TB5	500	195	56B		.20	3 0	15m		2.0	390					2 1k	125	1 5	M308
60#	2SF315	500 ∅	200	62B		125m	2 5	15m	125J	2.1	1 0k					3 5k	125J	1 0	S167
61#	2SF795	500	200	62B		125m	3 0	15m	125J	2 1	1.0k		100	40u	20	3 5k	125J	1 0	S167
62#	2SF795A	500	200	62B		125m	3 0	15m	125J	2 1	1 0k		100	20u	20	3 5k	125J	1 0	S167
63	261K	500	200	80		15	3.0	15m	125J	1.4	100				300	3 3k	125		T093
64	2181K	500	200	80C		300m	4 0	15m	125J	1.3 §	100	4.0u	100	20u	100	3 3k*	125J	3 †	T093
65	2182K	500	200	80C		300m	4.0	15m	125J	1 3 §	100	8 0u	100	30u	100	3 3k*	125J	3 †	T093
66	263K	500	200	85		15	3.0	15m	125J	1.3	50				300	1 6k	125		M414
67#	TT350	500	200	85C	40m∅	500m	3.0	25m	125J	1 6	600	5 0u§		100u§	100 ∅§	4 0k		1 5	S204a
68	2615K	500	200	105		15	3.0	15m	150J	1 4	100				200	3 3k	150		T093
69▼#	30TCA50	500	200	125	150	100m	3 0								100 §	5 5k	125	10	
70#	CR155-604NA	500	210	70C	35m∅	150m	3.5	30m†	125C	1 8	450			35u∅	100	2 1k	125	5.0 ∅	M201
71#	47TB5	500	220	50B		20	3 0	15m		1.9	440					2 4k	125	1.5	M308
72#	CR153-603A	500	220	70C	35m∅	150m	3.5	30m†	125C	1.6	450				100	3 0k	125	5 0	M201
73#	20TC50	500	220	125	50m	100m	3 0			1 5	200	5 0u	200	30u		2 5k	125J	20	S183
74#	CR152-603A	500	230	70C	35m∅	150m	3 5	30m†	125C	1.5	450				100	3 1k	125	5.0	M201
75#	2SF825	500	230	85B		100m	2 5	15m	125J	1 8	1.0k					4 0k	125J	10	S167
76	NLF185E	500	235 △		500m	150m	2 5		125J	2 8	1 5k	8 0u	100	15u	200	3 5k	125J	2.0 †	T093
77	151RC50	500 ∅	235 △	62C	50m∅	100m	2 5	6 0m∅	125J	1 7 †	471		150	25u§		3.0k△	125J	2 †	T093
78	151RB50	500 ∅	235 △	75C	500m	150m	2 5	20m	125J	2 2 †	471	2.0u	150	40u§	200 △	2 5k△	125J	2 †	T093
79#	SH150H11	500	235	76C	200m	150m	3.0	20m	125	1.5	500	6 0u	150	30u§	50	3.2k	125	3.0 †	S91b
80	151RC50A	500 ∅	235 △	80C	50m∅	100m	2 5	6 0m∅	125J	1.4 †	471		150	40u§		3 5k△	125J	2 †	T093
81▼	151RF50	500 ∅	235	80C	200m	200m	2 5	15m	125C	1 9 †	471		250	20u§	200 §	4 2k△	125J	3 0 †	T093
82	C180E△	500	235 △	80C	500m	150m	3 0	10m	25	2.9 †	1 5k	8 0u	100	30u	200	3 5k	125C	2.0	T093
83	C185E△	500	235 △	80C	500m	300m	3 0	10m	25	2 9 †	1.5k	8 0u	100	15u	200	3 5k	125C	2 0	T093
84	NLF180E	500	235 △	80C	500m	150m	2 5	6.0m	125J	2 8	1.5k	8 0u	100	80u	200	3 5k	125J	2 0 †	T093
85#	TT250	500	235	80C	250m	500m	3 0	25m	125J	1.7	450	5.0u	15	20u	100 §∅	3 2k	125C	1 0	S204
86	151RA50	500 ∅	235 △	85C	500m	150m	2 5	20m	125J	1.8 †	471	2 0u	150	60u§	200 △	3 5k△	125J	2 †	T093
87#	CR151-603A	500	240	70C	35m∅	150m	3 5	30m†	125C	1.4	450				100	3 3k	125	5 0	M201
88#	CR250GX10	500	250	50C		350m	4.0	15m	125J	1.9	780 §		250	30u∅	100 △	5 0k△	125J	16 ∅	M569
89#	CR250GY10	500	250	50C		350m	4 0	15m	125J	1.9	780 §		250	15u∅	100 △	5 0k△	125J	16 ∅	M569
90#	FT250BX10	500	250	52C		350m	4 0	15m	125J	1.9	780 §		250	30u∅	100	5 0k△	125J	16 ∅	M567
91#	FT250BY10	500	250	52C		350m	4 0	15m	125J	1.9	780 §		250	15u∅	100 △	5 0k△	125J	16 ∅	M567
92#	CR250AX10	500	250	61C	30m	350m	4 0	15m	125J	1.9	780 §		250	30u∅	100 △	5.0k△	125J	16 ∅	S158b
93#	CR250AY10	500	250	61C	30m	350m	4 0	15m	125J	1.9	780 §		250	30u∅	100 △	5.0k△	125J	16 ∅	S158b
94#	CR250F10	500	250	65C		350m	4 0	15m	125J	1.8 §	780				100 §	5.0k	125J	3 0 †	S158e
95	2N3358	500	250	80C	200m	400m§	4 0 §	15m	125C	2.0 §	250					5 0k§*	125C	3.0 †	T0108
96#	T250F500	500	250	85C	300m	200m	2 0	50m	125J	1.7	500	3.0u	100	30u§	400 §	5.5k§	125J	150	M387
97▼#	TY180NP5K2	500	260	70B	50m	200m	3 5	27m	125J	1.0	600	10u∅	500	20n∅	20 §	4 3k	125J	1.5 †	S375
98▼#	TY180QP5K2	500	260	70B	50m	200m	3 5	27m	125J	1.6	600	10u∅	500	30u∅	20 §	4.3k	125J	1.5 †	S375
99#	61TB5	500	275	67B		30	3.0	40m		2.4	665					3 2	125	2 0	M308a
100	260K	500	275	80		15	3 0	15m	125J	1.2					300	3 3k	125		T093
101♦	175PA50	500 ∅	275 △	85C	500m	150m	2 5	20m	125C	2.3 †	550				200 §	3.0k△	125J	2 0 †	Y200b
102	2605K	500	275	105		15	3 0	15m	150J	1 2	100				300	5 0k	125		T093
103♦#	40TC50	500	300		150m	100m	3 0			1.5					50 §∅	4.5k*	125J		S348
104#	CR300AW10	500	300	11A	30m∅	350m	4 0	15m	125J	1.9 §	780			50 §	100 §	5.0k	125J	16 ∅	S300
105#	CR300AX10	500	300	11A	30m∅	350m	4.0	15m	125J	1.9 §	780			30 §	100 §	5.0k	125J	16 ∅	S300
106#	CR300AY10	500	300	11A	30m∅	350m	4.0	15m	125J	1.9 §	780			15 §	100 §	5 0k	125J	16 ∅	S300
107#	CR300F10	500	300	15A		350m	4 0	15m	125J	1.8 §	780				100 §	5.0k	125J	16 ∅	S300
108	273K	500	300	70		.15	3.0	15m	125J	1.3	100				300	3.3k	125		M414
109#	FT300C10	500	300	73C		350m	4.0	30m	150J	1 7	950 §				50 △	5 0k△	150J	16 ∅	M567
110▼#	FT300A10	500	300	81C		200m	3.0	30m	125J	1.6	940 §				200 △	6.0k△	125J	16 ∅	M567a

SYMBOLS AND CODES EXPLAINED IN INTERPRETER

6. SILICON CONTROLLED RECTIFIERS

IN ORDER OF (1) PEAK REV. VOLT., (2) MAX. CONT. CUR., (3) TEMPERATURE, (4) TYPE No.

LINE No.	4 TYPE No	1 PRV and VBO (V)	MAX. CONT. CURRENT 2 Idc (A)	3 at TEMP (°C)	MAX. HOLD. CUR Ih @ 25°C (A)	MAX. GATE FIRING SPEC at 25°C Igf (A)	Vgf (V)	MAX SAT I Ir@PRV and Is@VBO (A)	at TEMP (°C)	MAX. FWD. VOLT. DROP at 25°C Vf (V)	@ If (A)	SWITCHING TIME at 25°C Ton (s)	for If (A)	Toff (s)	MIN. dV/dt @ 25°C (V/us)	ABS. MAX. RATINGS 1Cy PK SURGE I@25°C (A)	MAX TEMP (°C)	MAX GATE POWER (W)	DWG. No.
1▼#	40TCA50	500	300	125	150	100m	3 0								100 §	5 5k	125	10	
2	2231K	500	300	125J		300m	4.0	15m	125J	1.3 §	100	4.0u	100	30u	100	4 5k*	125J	3 0 †	M247
3	2232K	500	300	125J		300m	4.0	15m	125J	1.3 §	100	8.0u	100	40u	100	4 5k*	125J	3.0 †	M247
4	2248K	500	300	125J		300m	4.0	10m	125J	1.0 §	100	5 0u	150	50u	100	5 0k*	125J	3 0 †	M308c
5#	62TB5	500	315	65B		.30	3 0	40m		2.2	665					3 7k	125	2 0	M308a
6#	CR253-603A	500	320	40C	35mØ	150m	3.5	30m†	125C	1.6	450				100	3 5k	125	5.0 Ø	M201
7#	CR252-603A	500	336	50C	35mØ	150m	3 5	30m†	125C	1 5	450				100	3.6k	125	5.0	M201
8#	70TB5	500	355	67B		.30	3 0	40m		2.2	850					4 1	125	2 0	M308a
9	C380E	500	380	65C	500m	150m	3.0 §	10m	25C	2.8	1.5k	8 0u	100	100u	200	3 5k	120	2.0	M514
10	NLF380E	500	380	67	500m	150m	2.5	10m	25	2.8	1.5k	8 0u	100	100u	200	3.5k	125	2.0	
11	NLF385E	500	380	67	500m	150m	2 5	10m	25	2.8	1.5k	8.0u	100	20u	200	3.5k	125	2.0	
12♦	250PA50	500 ☑	390 △	70C	500m	150m	2 5	20m	125C	2.3 †	780				200 §	4.2k△	125J	2.0 †	Y200b
13	2N3535	500	400	20A	200m§	400m	4 0	15m	125J	1 9	250					5.0k	125J	16	M247
14#	71TB5	500	400	65B		.30	3 0	40m		2.0	850					4 6k	125	2 0	M308a
15▼	C600E	500	400 △	72	500	150	6 5			1.5	2.2k	4 0		250	100	13k	125	40	
16	250RA50	500 ☑	400 △	75C	100m	150m	3 0	25m	125J	1 7 †	785	5 0u	250	40u§	100 △Ø	5.0k△	125J	3 †	TO118
17#	FT500AX10	500	400	75C		350m	4.0	30m	125J	2.2	1.2k§		400	30u☑	200 △	7.0k△	125J	16 Ø	M406
18#	FT500AY10	500	400	75C		350m	4.0	3.0m	125J	2.2	1.2k§		400	15u☑	200 △	7.0k△	125J	16 Ø	M406
19#	2SF805	500	400	80C		125m	3.0	25m	125J	1.4	1 0k		300	60u	20	7 0k	125J	2 †	S280
20#	2SF805A	500	400	80C		125m	3.0	25m	125J	1.4	1 0k		300	30u	20	7.0k	125J	2 †	S280
21#	251RC50	500	400 △	85B	40m	.15	2 5	6 0m		1 5	250	6.0u	50	100u	4 0	4.8k	125A	10 Ø	S158d
22#	73TB5	500	430	64B		.30	3.0	40m		2 0	1 0k					5.1k	125	2 0	M308a
23#	CR7K603A45	500	435	65C	55mØ	150m	3.5	50m	125J	1.8	1.0k	3.5u	600	180u	100	6 0k	125J	5.0 Ø	M308b
24#	CR7K603A4	500	460	65C	55mØ	150m	3.5	50m	125J	1.7	1 0k	3.5u	600	180u	100	6.4k	125J	5.0 Ø	M308b
25	276K	500	470			.15	3 0	15m	125J	1 2	100				300	5.5k	125		M247
26	304RA50	500 ☑	470 △	5A	500m	150m	3 0	25m	125C	1 6 †	940					6.0k△	125J	3.0 †	TO109#
27#	74TB5	500	470	63B		300m	3.0	40m		1.8	1 0k					5 6k	125	2.0	M308a
28	6RW71KY	500	470	65C		250m	3.1	10mØ	125J	65 Ø	300				4 0	5.5k§	125	16	S132
29♦	C290E	500	470	65C	100m	150m	3 5			1.2	500	10u	5.0	250u§	100 §	5 5k	125J	3.0	S132
30♦	C291E△	500	470	65C	100m	150m	3.5			1.2	500	10u	5.0	250u§	100 §	5.5k	125J	3.0	S247a
31#	SH300H11	500	470	65C	300m	260m	3 5	20m	125J	1 6	100	6 0u	300	30u§	50	5 0k	125J	3 0 †	S267a
32	C291E☑	500	470	66C	100m	150m	3 0	15m	125J	1.2 †	500	5 0u	5 0	100u§	100 §	5 5k	125J	3 0 †	M331a
33	NLC295E	500	470	67	100m	150m	3 0	15m	125	1.2	500	5.0u	5 0	20u	100	5 5k	125	3 0	
34	NLC297E	500	470	67	100m	150m	3 0	15m	125	1.2	500	5.0u	5.0	20u	100	5 5k	125	3 0	
35	NLF290E	500	470	67	100m	150m	3.0	15m	125	1.2	500	5.0u	5 0	100u	100	5 5k	125	3 0	
36	NLF295E	500	470	67	100m	150m	3.0	15m	125	1.2	500	5 0u	5 0	20u	100	5 5k	125	3 0	
37	NLF297E	500	470	67	100m	150m	3.0	15m	125	1.2	500	5.0u	5.0	20u	100	5.5k	125	3 0	
38	272K	500	470	71		15m	3 0	15m	125J	1.2	100				300	5 5k	125		M414
39	300RA50	500 ☑	470 △	75C	100m	150m	3 0	25m	125J	1.4 †	945	5.0u	250	50u§	100 Ø§	5 5k△	125J	3 †	TO118
40	300RB50	500 ☑	470 △	75C	100m	150m	3 0	25m	125J	1.6 †	945	5.0u	250	50u§	25 △	5 5k△	125J	3 †	TO118
41#	301RC50	500	470 △	85B	40m	15	2 5	6 0m		1.4	300	6 0u	50	100u	4 0	5.5k	125A	10 Ø	S158d
42	NLF291E	500	470 △	125J	100m	150m	2.5	15m	125J	1.2	500	5.0u	100	100u§	100 §	5 5k△	125J	2 0 †	M436%
43#	CR7K603A35	500	480	65C	140m	150m	3 5	50m	125J	1 6	1 0k	3 5u	600	180u	100	6.9k	125J	5 0 Ø	M308b
44#	FT500C10	500	500	77C		350m	4.0	30m	125J	1 7 §	1.5k				200 §	10k	125J	16 Ø	M481
45#	80TB5	500	510	59B		30	3.0	40m		1.5	1.2k					6 4k	125	2 0	M308a
46#	CR7K603A3	500	520	55C	140m	150m	3 5			1.5	1 0k					7 0k	125J	5 Ø	M308b
47▼	NLC501E	500	550	25	250m	150m	6.5 §			1 5	1 0k			200u§	100 §	7 0k	125J	5 0 †	M593
48#	81TB5	500	550	56B		.30	3.0	40m		1.7	1 2k					7.0k	125	2.0	M308a
49	350RA50	500	550	65C	100m	150m	3.0	25m	125J	1.4	550	5.0u	50	100u§	100 §Ø	6.2k△	125J	3 0	S158a
50▼	C387E	500	550 △	65	500	150	3 0	45	125	4 2	3.0k	2 0		30	200	5 5k	125	40	
51▼	C388E	500	550 △	65	500	150	3.0	45	125	4 2	3 0k	2.0		20	200	5.5k	125	40	
52	270K	500	550	67		15	3 0	15m	125J	1 2	500				300	6 5k	125		S295
53#	84TB5	500	595	58B		30	3.0	40m		1.6	1.6k					8 6k	125	2.0	M428
54#	CR9K603A25	500	600	65C	55mØ	150m	3 5	50m	125J	1 3	1.0k	3 5u	600	180u	100	900	125J	5.0 Ø	M308b
55#	FT600A10	500	600	72C		350m	4 0	20m	125J	1 6	1.9k§				200 △	10k△	125J	16 Ø	M481
56#	91TB5	500	620	58B		30	3 0	40m		1 4	1 6k					8 6k	125	2.0	M428
57	C507E	500	625 △	125J	100m	150m	4.0	50m	125C	1.4	500	5 0u	25	100u☑	100	6 5k	125J	26	M464
58	C508E	500	625 △	125J	100m	150m	4.0	50m	125C	1.3	500	5 0u	25	60u☑	100	9 0k	125J	26	M464
59#	CR9K603A2	500	680	65C	55mØ	150m	3 5	50m	125J	1.1	1.0k	3 5u	600	180u	100	1 1k	125J	5 0 Ø	M308b
60#	94TB5	500	700	55B		.30	3 0	40m		1.2	1 6k					8.6k	125	2 0	M428
61▼	C397E	500	700 △	65	500	150	3 0	45	125	2 9	3 0k	2 0		45	200	7 5k	125	40	
62♦	C398E	500	700 △	65	500	150	3 0	45	125	2 9	3 0k	2 0		30	200	7 5k	125	40	
63▼#	FT800C10	500	800	63C		200m	3.0	30m	125J	1.6 §	2.5k				200 △	14k△	125J	16 Ø	M566
64♦	470PA50	500 ☑	850	60C	500m	150m	3 0	25m	125C	1.7 †	1.7k		250	120u§	100 §	8 0k△	125J	3 0 †	Y200c
65	C530E	500	980 △	125J	250m	150m	4 0	25m	125J	1 2	1 1k	4 0u	25	150u☑	100	10k	125J	26	M464
66	SCRFL55	550 ☑	1 7	80C	50m	15m	2.0	.90m	125C	1.2 △	1.0	2.0u§	1 0	12u§		60 §	125C	5.0	A130
67	SCRL55	550 ☑	1.7	80C	20m	15m	2 0	90m△	125C	1 2 △	1 0	1.3u§	1.0	15u§		60 §	125C	5.0	A130
68	SCR355	550 ☑	4 0	80C	25m	10m	2 0	1 0m△	125C	2.0 △	3 0	1 3u§	1 0	15u§		60 §	150J	5 0	S62
69#	BTX68-500R	550 §	6 4	85B	10m§Ø	30m	3.0	2.5m	125J	2.3	20	3 0u	10	20u		80	125J	.5 †	S172
70	SCR555	550 ☑	7.0	60C	25m	15m	2 0	1.0m	125C	1 9 △	15	1.0u§	10	15u§		100 §	125J	10	S121
71	SCRF555	550 ☑	7.0	60C	50m	25m	2 0	1 0m	125C	1.9 △	15	2 0u§	10	12u§		100 §	125J	10	S121
72	SCR555A	550 ☑	7.0	110C	25m	15m	2 0	1.0m△	150C	1.9 △	15	1 0u§	10	15u§		100 §	150J	10	S121
73#	BTX35/500R	550	12	25	10mØ	65m	3 5	6 0m	125	3.0	50	2 0u		15u			125J		TO48
74#	BTX36/500R	550	12	85B	10mØ	40m	3 0	6.0m	125	2.0	50	2.0u	50	15u		136 *	125J	5 †	TO48
75	SCR855	550 ☑	16	25C	100m	75m	3 5	6.0m△	100C	3 0	50	3.0u§	10	30u§		150 §	100J	15	TO48
76	SCR1655	550 ☑	35	25C	50m	40m	3 0	2 0m△	125C	2 0	50	1.5u§	10	20u§		200 §	125J	15	TO48
77	SCR1655A	550 ☑	35	25C	50m	40m	3 0	2.0m△	125C	2.0	50	1.5u§	10	20u§		250 §	125J	15	TO48
78	SCRF1655	550 ☑	35	25C	100m	40m	3 0	2.0m△	125C	2.0	50	2 0u§	10	12u§		200 §	125J	15	TO48
79	C354M	600			500m	500m	4 0	11m	25C	3 0 †	500 †		50	7 0u§	200 §	1 2k		2 0	M514
80	C355M	600			500m	500m	4 0	11m	25C	3 0 †	500 †		50	12u§	100 §	1 2k		2.0	M514
81	C385M	600			500m	300m	3.0	10m	25C	2.8 †	1.5k†		250	15u§	200 §	3 5k		2.0 †	M514
82	C506M	600			500m	220m	5.0	10m	25C				300	40u§	200 §		125J	5 0 †	M464
83	C510M	600			500m	200m	5 0	10m	25C	2 2 †	500 §		300	12u§	200	4 0k	125J	2 0 †	M464
84#	10RCV60	600		125	50m	45m	2.9	3.0m	125	2.3			135	10u	100	135	125	.50	TO48
85#	2SF527	600 Ø	.40	25A	2 0mØ	3.0m	1 0	20mØ	125J	1 2	1.0					20	125J	1 Ø	TO5
86♦#	CR05A12	600 Ø	400m	25A		3 0m	1 0	200u	125J	1 2	1 0					20 △	125J	100mØ	TO5
87▼	S6001K	600	500m	80C	10m	10m	1.5	1 0m	100C	1.6	3.0	1 5u	2.0	25u§	20 §	50 §	125A	500m†	M506
88#	TD6001J	600	600m	25A	40mØ	20m	3 0	1 0m	125J	2.0	1.0	1 5u§	500m	15u§	50 Ø§	12		60m	C16e
89#	CS0.6-06	600	650m		20m	10m	3.0			1.4	2.0			60u	200	35	125	10	
90#	BStB0140	600	800m	45A	50m	15m	6.0	400u	120J	1.4	2.5				100 §	34	120J	400m	M477
91#	CS1-06	600	1 0		50m	30m	3.0	1 0m	125	1 4	4.0			60u	100	55	125	10	
92#	TD6	600	1 0	25A	20mØ	10m	3 0	1 0m	125J	2.0	1.0	1 5u§	500m	20u§	50 Ø§	15		30m	C16e
93#	TD6001	600	1.0	25C	1.0mØ	2.5m	5 0	1 0m	100J	2.0	.75	1.5u	.60	20u		12	100A	.01	TO5
94	B03405	600	1 0	80C	10m	10m	1 5	1.5m	100C	1 6		1 5u	2.0	25u	20 §	50 §		500m†	M506
95	B04305	600	1.0	80C	10m	10m	1 5	1.5m	100C	1 6		1 5u	2 0	25u	20 §	50 §		500m†	C16aa
96▼	S6001J	600	1.0	80C	10m	10m	1.5	1 0m	100C	1.6	7 0	1 5u	2 0	25u§	20 §	50 §	125A	500m†	M506
97▼	S6001M	600	1 0	80C	10m	10m	1 5	1 0m	100C	1 6	7 0	1.5u	2.0	25u§	20 §	50 §	125A	500m†	C16aa
98	SCR16A	600 ☑	1 1	25C	20m	15m	2.0	900u△	125C	1.2 △	1 0	1 0u§	30	20u§		60 §	125J	5 0	A130
99	SCRF16A	600 ☑	1.1	25C	50m	15m	2.0	90m△	125C	1.2 △	1 0	2.0u§	1 0	6 0u§		60 §	125J	5 0	A130
100	2N4102	600	1 3	25C		30m§	3.0 §									60 *	100A	5 Ø	TO8
101#	1RC60	600	1.3	75B	20m	18m	2 1	3 0m	100	1.7	1.3			15u	10	60	100	50	TO8
102	B03007	600	1.4	60C	6.0m	50u	1 0	100u	100C	1 6		1 5u	2 0	35u	4 0 §	50 §	125J	500m†	M506
103	B03008	600	1 4	60C	6 0m	200u	1 0	100u	100C	1 6		1 5u	2 0	30u	4 0 §	50 §	125J	500m†	M506
104	B03009	600	1 4	60C	6.0m	1.5m	1 0	100u	100C	1 6		1 5u	2 0	20u	10 §	50 §	125J	500m†	M506
105	B04007	600	1.4	60C	6.0m	50u	1 0	100u	100C	1 6		1.5u	2 0	35u	4 0 §	50 §	125J	500m†	C16aa
106	B04008	600	1.4	60C	6.0m	200u	1 0	100u	100C	1 6		1.5u	2 0	30u	4 0 §	50 §	125J	500m†	C16aa
107	B04009	600	1 4	60C	6.0m	1 5m	1 0	100u	100C	1 6		1.5u	2 0	20u	10 §	50 §	125J	500m†	C16aa
108▼	40813	600	1 5	75C	20m	15m	2 0			3.5	30	2.0u☑	4 5		10 §	40	100C	10	C16ac
109	SCR160	600 Ø	1 6	85C	25m	10m	3 0	1.0m△	125J	2 0 △	1 0	1.4u§	1 0	20u§		60 §	150S	5 0	TO5
110	SCRFL60	600 ☑	1.7	80C	50m	15m	2 0	90m	125C	1 2 △	1.0	2.0u§	1 0	12u§		60 §	125C	5 0	A130

SYMBOLS AND CODES EXPLAINED IN INTERPRETER

6. SILICON CONTROLLED RECTIFIERS

IN ORDER OF (1) PEAK REV. VOLT., (2) MAX. CONT. CUR., (3) TEMPERATURE, (4) TYPE No.

LINE No.	4 TYPE No.	1 PRV and VBO (V)	MAX. CONT. CURRENT 2 Idc (A)	3 at TEMP (°C)	MAX. HOLD. CUR Ih @ 25°C (A)	MAX. GATE FIRING SPEC at 25°C Igf (A)	Vgf (V)	MAX SAT I Ir@PRV and Is@VBO (A)	at TEMP (°C)	MAX. FWD. VOLT. DROP at 25°C Vf (V)	@ If (A)	SWITCHING TIME at 25°C Ton (s)	for If (A)	Toff (s)	MIN. dV/dt @ 25°C (V/us)	ABS. MAX. RATINGS 1Cy PK SURGE I@25°C (A)	MAX TEMP (°C)	MAX GATE POWER (W)	DWG. No.
1	SCRL60	600 ⊠	1.7	80C	20m	15m	2.0	.90mΔ	125C	1.2 Δ	1.0	1.3u§	1.0	15u§		60 §	125C	5.0	A130
2	B01412	600	1.9	80C	10m	10m	1.5	1.5m	100C	1.6		1.5u	2.0	25u	20 §	50 §		500mt	M507
3	B04312	600	1.9	80C	10m	10m	1.5	1.5m	100C	1.6		1.5u	2.0	25u	20 §	50 §		500mt	C16aa
4▼	S6003L	600	1.9	80C	10m	10m	1.5	1.0m	100C	1.6	12	1.5u	2.0	25u§	20 §	50 §	125A	500mt	M507
5▼	S6003M	600	1 9	80C	10m	10m	1.5	1.0m	100C	1.6	12	1.5u	2.0	25u§	20 §	50 §	125A	500mt	C16aa
6	JAN2N4202	600	2.0 Δ	85C	5.0m⊠	50m	1.5	4.0m	100C	25 †	30		2.0	15u	250 §	100 §	100J	20 Ø	S17c
7	2N4202	600 Δ	2 0	90C	3.0m§	100m§	2.0 §	2.0mΔ	105C	1.5 †	2.0	.20u		20u	250	15 *	105A	20 Ø	S17a
8	MCR729-8	600 Δ	2 0 Ø	105J	15mØ	50m	1.5	2.0mΔ§	105J	1.5	2.0	.20u	30		50 §	100 *†	105J	20 Ø	S258
9#	TM6004	600	2.5	25A	30mØ	25m	3.0	3.0m	110J	2.0	8.0	2.0u§	1 0	60u§	50 Ø§	50		75m	S141d
10	UCR60L	600 Δ	2 5	25A	50m	50m				1.2	3.0	400n	30	15u	250	60	125J	3.0 ⊠	A253
11	B01027	600	2.7	60C	6.0m	50u	1.0	100u	100C	1.6		1.5u	2.0	35u	4.0 §	50 §	125J	500mt	M507
12	B01028	600	2.7	60C	6 0m	200u	1.0	100u	100C	1.6		1.5u	2.0	30u	4.0 §	50 §	125J	500mt	M507
13	B01029	600	2 7	60C	6.0m	1 5m	1.0	100u	100C	1.6		1.5u	2.0	20u	10 §	50 §	125J	500mt	M507
14	B04027	600	2.7	60C	6.0m	50u	1 0	100u	100C	1.6		1.5u	2.0	35u	4.0 §	50 §	125J	500mt	C16aa
15	B04028	600	2.7	60C	6.0m	200u	1.0	100u	100C	1.6		1.5u	2.0	30u	4.0 §	50 §	125J	500mt	C16aa
16	B04029	600	2.7	60C	6 0m	1.5m	1.0	100u	100C	1.6		1.5u	2.0	20u	10 §	50 §	125J	500mt	C16aa
17	NCM600C	600	3 0	$	15mØ	30m	1.5	2 0m	100J	1.5	5.0	1.0u⊠		10u⊠	25 §		100	20 Ø	S17
18#	2SF534	600	3.0	40C	5.0mØ	20m	2.0	1.5mØ	125J	1.2	3.0					50	125J	1 Ø	C63aΔ
19#	BStB0240	600	3.0	61C	50m	15m	6 0	400u	120J	1.9	9.4				100 §	34	120J	400m	M478
20	RTR0160	600	3.0	65C	100m	50m	3 0	2 0m	100	2.5	10	.20u	3 0		100	40	100C		TO66
21	C15M	600	3.0	75C	30m	25m	2.5	2.0m	105J	1.9 †	15					60	105J	.50	TO64
22	NCR600B	600	3.0	80B$		25m	2.5	1.0m	125C	2 0 §	1 0					25 §	100A		S17
23	RTN0160	600	3 0	80C	100m	50m	3.0	2 0m	100	2.5	10	.20u	3.0		100	40	100C		TO64
24	RTS0160	600	3 0	80C	100m	50m	3 0	2 0m	100	2.5	10	.20u	3 0		100	40	100C		M94
25#	CR3D12	600 Ø	3.0	95C	5.0mØ	20m	2 0	1.5m	125J	1.2	3.0					50 Δ	125J	1.0 Ø	C63a
26	40555	600	3 2	60C	50m	40m	3 5	1.5m†	100C						100 §	80	100C	.50	TO66
27	2N4101	600	3.2	75C		30m§	3 0 §									60 *	100A	5 Ø	TO66
28	40506	600	3 2	75C	10mØ	15m	2.0	4.0m	100C	2.8	30	15u§	2 0		10 §	60	100C	13	M394
29	B01419	600	3 8	80C	20m	15m	1.5	1.5m	100C	1.6		1 5u	2.0	25u	20 §	100 §		500mt	M507
30	B05419	600	3.8	80C	20m	15m	1 5	1.5m	100C	1.6		1.5u	2.0	25u	20 §	100 §		500mt	S307
31	B18036	600	3.8	80C	20m	15m	1.5	1.5m	100C	1.6		1.5u	2.0	25u	20 §	100 §		500mt	
32	B19036	600	3 8	80C	20m	15m	1 5	1.5m	100C	1.6		1.5u	2.0	25u	20 §	100 §		500mt	
33▼	S6006B	600	3 8	80C	20m	15m	1 5	1.0m	100C	1.6	24	1.5u	2.0	25u§	20 §	100 §	125A	500mt	S307
34▼	S6006G	600	3 8	80C	20m	15m	1.5	1.0m	100C	1.6	24	1.5u	2.0	25u§	20 §	100 §	125A	500mt	M605
35▼	S6006H	600	3.8	80C	20m	15m	1 5	1 0m	100C	1.6	24	1.5u	2.0	25u§	20 §	100 §	125A	500mt	S361
36▼	S6006L	600	3 8	80C	20m	15m	1 5	1.0m	100C	1.6	24	1.5u	2.0	25u§	20 §	100 §	125A	500mt	M507
37	SCR36A	600 ⊠	4.0	80C	25m	15m	2 0	1.0mΔ	125C	2.0 Δ	3 0	1.0u⊠	60			60 §	125J	5.0	S62
38	SCR360	600 ⊠	4.0	80C	25m	10m	2.0	1.0mΔ	125C	2.0 Δ	3.0	1.3u§	1.0	15u§		60 §	150J	5.0	S62
39	SCRF36A	600 ⊠	4.0	80C	50m	15m	2.0	1.0mΔ	125C	2.0 Δ	3 0	2.0u§	1.0	6.0u§		60 §	125J	5.0	S62
40#	TM6007	600	4 5	25A	40mØ	40m	3 0	3.0m	110J	2.0	15	2.0u§	6 0	50u§	50 Ø§	80		120m	S141d
41	2N2619	600	4 7 Δ	60C		30m$	2.0 $	1.0m	60C	1.8 †	4 7					60 *§	125C	.50 †	TO64
42	3RC60	600 ⊠	4 7 Δ	92C	5 0mØ	15m	2 0	1 0m	105C	2.0	9.4 †					30 Δ	105J	.50 †	TO64
43	3RC60A	600 ⊠	4 7 Δ	105C	5 0mØ	10m	3 0	2.0m	125C	2.0	9 4 †					40 Δ	125J	.50 †	TO64
44	RTR0260	600	5.0	65C	100m	50m	3 0	2.0m	100	2.5	15	20u	5.0		100	60	100C		TO66
45	RTR0360	600	5.0	65C	25m	15m	1 5	1 0m	100	2.0	15	20u	5 0		100	60	100C		TO66
46	RTR0460	600	5 0	65C	100m	50m	3.0	2 0m	125	2.5	15	.20u	5 0		100	60	125C		TO66
47	2N4174	600	5 0	70C	60m$	50m$	2.5 $	2.0m	100C							100 *	100C	5.0 Ø	S262
48	2N4182	600	5.0	70C	60m$	50m$	2 5 $	2.0m	100C							100 *	100C	5.0 Ø	S263
49#	TAG3-600	600	5 0	70	25m	15m	2 0	1.5m	105	2.1	10					60	105	5.0	TO66
50	2N4158	600	5 0	75C	60m$	50m$	2 5 $	2 0m	100C							100 *	100C	5.0 Ø	C84
51	2N4166	600	5 0	75C	60m$	50m$	2 5 $	2 0m	100C							100 *	100C	5.0 Ø	C85
52	2N4190	600	5 0	75C	60m$	50m$	2 5 $	2 0m	100C							100 *	100C	5.0 Ø	S264
53	2N4198	600	5 0	75C	60m$	50m$	2.5 $	2.0m	100C							100 *	100C	5.0 Ø	M363
54	2N4444	600	5.0	75	70m§	60m§	2 5 §	2.0m	100	2.5	15					80	100A		M38c
55	MCR2604-8	600 Δ	5.0	75C	60m§	50m§	2 5 §					1.0u	5.0	15u		100 *	100C	5 Ø	
56	MCR2605-8	600 Δ	5 0	75C	60m§	50m§	2.5 §					1 0u	5.0	15u		100 *	100C	5.0 Ø	M305
57#	BStC0140	600	5.0	80C	100m	40m	2.0	2.0m	125J	1.8	15				50 §	70	125J		S343
58#	BStC0540	600	5 0	80C	100m	40m	2.0	2.0m	125J	1 8	15				50 §	70	125J		TO66
59	RTN0260	600	5.0	80C	100m	50m	3 0	2.0m	100	2 5	15	20u	5.0		100	60	100C		TO64
60	RTN0360	600	5.0	80C	25m	15m	1 5	1 0m	100	1.8	15	.20u	5.0		100	60	100C		TO64
61	RTN0460	600	5.0	80C	100m	50m	3.0	2.0m	125	2 5	15	.20u	5.0		100	60	125C		TO64
62	RTN0560	600	5 0	80C	25m	15m	1 5	1 0m	125	1 8	15	.20u	5.0		100	60	125C		TO64
63	RTN0660	600	5.0	80C	25m	15m	1 5	1 0m	150	1.8	15	20u	5.0		100	60	150C		TO64
64	RTR0560	600	5.0	80C	25m	15m	1.5	1 0m	125	2 0	15	.20u	5 0		100	60	125C		TO66
65	RTS0260	600	5 0	80C	100m	50m	3 0	2 0m	100	2.5	15	20u	5.0		100	60	100C		M94
66	RTS0360	600	5.0	80C	25m	15m	1 5	1 0m	100	1.8	15	20u	5 0		100	60	100C		M94
67	RTS0460	600	5 0	80C	100m	50m	3 0	2 0m	125	2.5	15	20u	5.0		100	60	125C		M94
68	RTS0560	600	5 0	80C	25m	15m	1 5	1.0m	125	1 8	15	20u	5.0		100	60	125C		M94
69#	CR5-602B	600 †	5 0	125C	150m	80m	3.0	5.0m	125C	3.0	5 0	2.0u	5.0	12u	20		125C	1 0	TO48
70	B01426	600	5 4	80C	20m	15m	1 5	1 5m	100C	1.6		1.5u	2.0	25u	20 §	100 §		500mt	M507
71	B05426	600	5 4	80C	20m	15m	1 5	1 5m	100C	1.6		1.5u	2 0	25u	20 §	100 §		500mt	S307
72	B18046	600	5 4	80C	20m	15m	1.5	1 5m	100C	1.6		1 5u	2.0	25u	20 §	100 §		500mt	
73	B19046	600	5 4	80C	20m	15m	1 5	1 5m	100C	1 6		1.5u	2.0	25u	20 §	100 §		500mt	
74▼	S6008B	600	5 4	80C	20m	15m	1 5	1 0m	100C	1 6	33	1 5u	2 0	25u§	20 §	100 §	125A	500mt	S307
75▼	S6008G	600	5.4	80C	20m	15m	1 5	1 0m	100C	1.6	33	1.5u	2 0	25u§	20 §	100 §	125A	500mt	M605
76▼	S6008H	600	5 4	80C	20m	15m	1 5	1 0m	100C	1.6	33	1.5u	2.0	25u§	20 §	100 §	125A	500mt	S361
77▼	S6008L	600	5 4	80C	20m	15m	1 5	1 0m	100C	1.6	33	1.5u	2 0	25u§	20 §	100 §	125A	500mt	M507
78	B01055	600	5.5	60C	6.0m	200u	1 0	100u	100C	1.6		1.5u	2.0	30u	4.0 §	100 §	125J	500mt	M507
79	B01056	600	5 5	60C	6 0m	1 5m	1.0	100u	100C	1.6		1 5u	2.0	20u	10 §	100 §	125J	500mt	M507
80	B05005	600	5.5	60C	6 0m	200u	1 0	100u	100C	1.6		1.5u	2.0	30u	4.0 §	100 §	125J	500mt	S307
81	B05006	600	5 5	60C	6.0m	1 5m	1.0	100u	100C	1.6		1 5u	2.0	20u	10 §	100 §	125J	500mt	S307
82#	TM6010	600	6 0	25A	40mØ	40m	3 0	3.0m	110J	2.0	20	2.0u§	6 0	50u§	50 Ø§	100		120m	S141d
83	NCF600C	600	6.0	70B$		30m$	2 0 $	4 5mØ	60C	1.9 $	4 7			12u⊠		60	100A	50	S17
84	T606	600	6.0	70	50m	80m	5 0			2.2		2 5u			30 Ø	100	100J		M94
85	T606-5	600	6 0	70	50m	80m	5.0			2.2		2.5u			30 Ø	100	100J		TO5
86	T606-66	600	6 0	70	50m	80m	5 0			2.2		2.5u			30 Ø	100	100J		TO66
87	T606S	600	6 0	70	50m	80m	5 0			2.2		2.5u			30 Ø	100	100J		S131
88#	T6F600C	600	6 0	85C	60m	40m	2.0	2.0m	125J	2.5	20	1 0u	10	12u§	400 §	100 §	125J	15	S131j%
89#	T6N600C	600	6 0	85C	60m	20m	2 0	2.0m	125J	2.5	20	1.0u	10	17u§	50 §	100 §	125J	15	S131j%
90#	T6N600H	600	6 0	85C	60m	20m	2 0	2 0m	125J	2.5	20	1.0u	10	17u§	50 §	100 §	125J	15	M94e%
91#	TW6N600C	600	6.0	85C	60m	50m	3.0	2.0m	125J	2.5	10				5 0 §	60 §	125J	3 0	S131j%
92#	TW6N600H	600	6 0	85C	60m	50m	3 0	2.0m	125J	2.5	10				5 0 §	60 §	125J	3 0	M94e%
93#	CR5-601B	600 †	6 0	95C	150m	80m	3 0	5.0m	125C	3.0	5.0	2.0u	5.0	12u			125C	1.0	TO48
94#	TP6004	600	6.0	100C	100m	40m	3 0	3.0m		1.2	4.0	2.0u	4 0	30u	100 §Ø	80	125C	.50	S18a
95#	CS5-06	600	6 2	100	50m	30m	3.0	3.0m	125	1.7	20			60u	200	110	125	10	
96	4RCM60	600	6 3	85B	45m	85m	3 0	1.0m	105	1.9	4.0			20u	20	50	105	.50	TO64
97	40740	600	6 3	85C	20m	15m	2 0			2.5	100	1 6u	30	15u	10 §	100	100C	40 Ø	M94
98	40744	600	6 3	85C	20m	15m	2 0			2.5	100	1.6u	30	15u	10 §	100	100C	40 Ø	S131
99	40748	600	6.3	85C	20m	15m	2 0			2.5	100	1.6u	30	15u	10 §	100	100C	40 Ø	S304
100	B01433	600	6.35	80C	20m	15m	1 5	1.5m	100C	1 6		1.5u	2.0	25u	20 §	100 §		500mt	M507
101	B05433	600	6 35	80C	20m	15m	1 5	1.5m	100C	1.6		1.5u	2.0	25u	20 §	100 §		500mt	S307
102	B18056	600	6.35	80C	20m	15m	1 5	1 5m	100C	1.6		1.5u	2.0	25u	20 §	100 §		500mt	
103	B19056	600	6 35	80C	20m	15m	1 5	1.5m	100C	1.6		1 5u	2 0	25u	20 §	100 §		500mt	
104▼	S6010B	600	6 35	80C	20m	15m	1 5	1 0m	100C	1 6	41	1 5u	2 0	25u§	20 §	100 §	125A	500mt	S307
105▼	S6010G	600	6 35	80C	20m	15m	1 5	1 0m	100C	1.6	41	1.5u	2 0	25u§	20 §	100 §	125A	500mt	M605
106▼	S6010H	600	6 35	80C	20m	15m	1 5	1.0m	100C	1.6	41	1 5u	2 0	25u§	20 §	100 §	125A	500mt	S361
107▼	S6010L	600	6 35	80C	20m	15m	1 5	1 0m	100C	1 6	41	1 5u	2.0	25u§	20 §	100 §	125A	500mt	M507
108#	BTY79-600R	600 §	6 4	85C	20	30m	3 0	2 5m	125	2 3		3.0u	10	20u		80	125	5.0 Ø	TO64
109#	2SF201	600 ⊠	6 5	60B		20m	2 1	2 0m	100J	2 3	20					50	100J	.50	S105a
110	SCR56A	600 ⊠	7 0	60C	25m	20m	2.0	1 0mΔ	125C	1 9 Δ	15	1 0u§	100	20u§		100 §	125J	10	S121

SYMBOLS AND CODES EXPLAINED IN INTERPRETER

6. SILICON CONTROLLED RECTIFIERS

IN ORDER OF (1) PEAK REV. VOLT., (2) MAX. CONT. CUR., (3) TEMPERATURE, (4) TYPE No.

LINE No	4 TYPE No.	1 PRV and VBO (V)	MAX. CONT. CURRENT 2 Idc (A)	3 at TEMP (°C)	MAX. HOLD. CUR Ih @ 25°C (A)	MAX. GATE FIRING SPEC at 25°C Igf (A)	Vgf (V)	MAX SAT I Ir@PRV and Is@VBO (A)	at TEMP (°C)	MAX. FWD. VOLT. DROP at 25°C Vf (V)	@ If (A)	SWITCHING TIME at 25°C Ton (s)	for If (A)	Toff (s)	MIN. dV/dt @ 25°C (V/us)	ABS. MAX. RATINGS 1Cy PK SURGE I@25°C (A)	MAX TEMP (°C)	MAX GATE POWER (W)	DWG. No.
1	SCRF56A	600 ∅	7 0	60C	50m	20m	2 0	1.0m△	125C	1.9 △	15	2.0u§	10	6.0u§		100 §	125J	10	S121
2	SCRF560	600 ∅	7.0	60C	50m	25m	2 0	1 0m	125C	1 9 △	15	2.0u§	10	12u§		100 §	125J	10	S121
3	2N5167	600	7 0	85C	90m§	75m$	2 5 §	5.0m	100C	1.7 †	41					240 *	100C	.5 †	M94b
4	2N5171	600	7 0	85C	90m§	75m$	2 5 §	5 0m	100C	1 7 †	41					240 *	100C	5 †	S131c
5	SCR560A	600 ∅	7 0	110C	25m	15m	2 0	1 0m△	150C	1 9 △	15	1.0u	10	15u§		100 §	150J	10	S121
6	5RC60	600 ∅	7 4 △	60C	5.0m∅	15m	2.0	1 0m	105C	1.9	15 †	2.5u	60		20	60 △	105J	.50 †	T064
7	5RCF60A	600 ∅	7 4 △	60C	5.0m∅	15m	1 4	1.0m	125C	1 9	15 †	2 5u	5 0	12u		60 △	125J	.50 †	T064
8	5RC60A	600 ∅	7 4 △	80C	5.0m	15m	1 4	2 0m	125C	1 9	15 †	2.5u				75 △	125J	.50 †	T064
9#	CR4-601A	600 †	7.4 △	80	30m	25m	2 0	2.5m	100J	1.8	10	1.1u	8 0	50u	20 △	80 △	125J	5.0 ∅	M94
10#	CR4-601B	600 †	7 4 △	80	30m	25m	2.0	2 5m	100J	1 8	10	1 1u	8 0	50u	20 △	80 △	125J	5.0 ∅	S131
11#	TAG6-600	600	7 5	70C	25m	25m	2 0	1 5m	105	1.7	10					100	105	500mt	T066
12#	TAG7-600	600	7.5	70C	25m	25m	2 0	1 5m	105	1 7	10					100	105	500mt	T048
13#	TAG7S600	600	7 5	70C	25m	25m	2 0	1 5m	105	1 7	10			12u		100	105	500mt	T048
14#	BTX31-600	600	7 5	85	15m	15m	3 0	1 5m	125	1.7	10					100	125	5.0	T048
15#	BTX31S600	600	7 5	85	15m	15m	3 0	1 5m	125	1 7	10			12u		100	125	5.0	T048
16#	BTX71-600	600	7 5	85	40m	40m	3.0	1 5m	125	1.7	10	1 4u	5.0	20u	100	100	125	5.0	T048
17#	BTX71S600	600	7.5	85	40m	40m	3.0	1.5m	125	1 7	10	1 4u	5 0	12u	100	100	125	5 0	T048
18	2N3759	600	7.5	100	200m	200m	2.3	3.0m	120A				10	75u	200	250 *	120A	2.0	T048
19	B01075	600	7 8	60C	6.0m	200u	1.0	100u	100C	1 6		1 5u	2 0	30u	4.0 §	100 §	125J	500mt	M507
20	B01076	600	7 8	60C	6.0m	1 5m	1.0	100u	100C	1 6		1.5u	2.0	20u	10 §	100 §	125J	500mt	M507
21	B05025	600	7.8	60C	6 0m	200u	1.0	100u	100C	1.6		1.5u	2.0	30u	4.0 §	100 §	125J	500mt	S307
22	B05026	600	7 8	60C	6 0m	1 5m	1.0	100u	100C	1 6		1.5u	2.0	20u	10 §	100 §	125J	500mt	S307
23#	SF5J11	600	8 0	24		20m	2.0	2 0m	125J	2.0	20					60	125J	500m	S141a
24▼	TIC116M	600	8.0	70	40m	20m	1 5	2 0m	110C	1 7	8 0				100 ∅	80	110C	5.0	
25	2N4103	600	8.0	80C		80m§	3 0 §									200 *	100A	5 ∅	TO3
26#	T6F600H	600	8.0	85C	60m	40m	2 0	2 0m	125J	2 5	20	1 0u∅	10	12u§	400 §	75 §	125J		M94e%
27#	T8F600C	600	8 0	85C	60m	40m	2 0	2 0m	125J	2 0	20	1 0u	10	12u§	400 §	120 §	125J	15	S131j%
28#	T8N600C	600	8.0	85C	60m	20m	2 0	2 0m	125J	2 0	20	1 0u	10	18u§	50 §	120 §	125J	15	S131j%
29#	T8N600H	600	8.0	85C	60m	20m	2 0	2 0m	125J	2.0	20	1 0u	10	18u§	50 §	120 §	125J	15	M94e%
30#	TW8N600C	600	8 0	85C	60m	50m	3 0	2.0m	125J	1.9	10				5 0 §	80 §	125J	3.0	S131j%
31#	TW8N600H	600	8 0	85C	60m	50m	3 0	2 0m	125J	1 9	10				5 0 §	80 §	125J	3 0	M94e%
32#	SH5J11	600	8 0	90C	50m	30m	2 5	4 0m	125J	2.0	20	6 0u	10	10u	100 △	60	125J	5.0 ∅	S141a
33▼	HEPR1223-RT	600	8 0	100J	10m∅§	10m§										80 §	100		M386
34▼	HEPR1247-RT	600	8 0	100J	25m∅§	20m§										100 §	100		S230
35#	CS8-06	600	8 2	100	50m	30m	3 0	3 0m	125	1 6	26			60u	200	170	125	10	
36#	BTX64/600R	600	8 5	85B	10m∅§	65m	3 5	5.0m	125J	3 0	50	.40u	10	10u	120	140 *	125J	.5 †	T048
37#	TP6006	600	9 0	100C	100m	40m	3 0	3 0m		1 2	6 0	2 0u	6 0	30u	100 §∅	100	125C	50	S18a
38	B01095	600	9.1	60C	6 0m	200u	1 0	100u	100C	1 6		1 5u	2 0	30u	4 0 §	100 §	125J	500mt	M507
39	B01096	600	9 1	60C	6.0m	1 5m	1.0	100u	100C	1 6		1.5u	2 0	20u	10 §	100 §	125J	500mt	M507
40	B05045	600	9 1	60C	6 0m	200u	1.0	100u	100C	1.6		1 5u	2 0	30u	4.0 §	100 §	125J	500mt	S307
41	B05046	600	9 1	60C	6.0m	1 5m	1 0	100u	100C	1 6		1.5u	2 0	20u	10 §	100 §	125J	500mt	S307
42#	T8F600H	600	9 5	85C	60m	40m	2 0	2.0m	125J	2 0	20	1 0u∅	10	12u§	400 §	95 §	125J		M94e%
43	NCF600D	600	10		15m∅	50m	3 5	2 0m	100	1 2	10	500n	10	6.0u	25 §	125	100A	.50 †	TO48
44	NCM600E	600	10		25m∅	150m	2 0			1.2	10	500n	10	6.0u	200 §		120A	1.0 †	TO48
45#	TR6010	600	10	25A	50m∅	80m	3 0	5.0m	125J	2.2	30	2 0u§	10	50u§	50 ∅§	125		240m	S313
46#	CR10B12	600	10	59C		30m	2 5	3 0m	100J	1 6	30					150 △	100J	5.0 ∅	S334
47#	2SF451	600	10	63C	10m∅	30m	2.5	3.0m∅	100J	1.2	10					90	100J	5 ∅	S141b
48#	2SF451A	600	10	63C	10m∅	30m	2 5	3.0m∅	100J	1 2	10		10	15u∅	100 △	90	100J	5.0 ∅	S141b
49	10RC60	600 ∅	10	65C	10m∅	15m	2 0	2.5m	105C	2 3	10					125	105J	50 †	TO48
50	RTT0160	600	10	65C	200m	50m	3 0	2 0m	100	2.5	30	20u	10		100	100	100C		TO48
51	RTT0460	600	10	65C	200m	50m	3 0	2 0m	125	2.5	30	20u	10		100	100	125C		TO48
52	RTU160	600	10	65C	20	50m	3 0	2 0m	100	2 5	30	200n	10		100	100	100C		S131
53	RTU0460	600	10	65C	20	50m	3 0	2 0	125	2.5	30	200n	10		100	100	125C		S131
54▼#	CR10CY12	600	10	66C		40m	2 5	4 0m	125J	2.5	30		10	15u∅	100 △	140 △	125J	5 0 ∅	S350
55#	CR10EY12	600	10	66C		40m	2 5	4 0m	125J	2.5	30		10	15u∅	100 △	140 △	125J	5.0 ∅	S334
56#	CR5-602AB	600	10	70C	20m∅	80m	3 0	10m	100C	2.0	16	2.0u	20	20u∅	20	90	125	5.0 ∅	
57#	CR5-602BB	600	10	70C	20m∅	80m	3.0	10m	100C	2.0	16	2.0u	20	15u∅	20	90	125	5 0 ∅	
58#	CR5-602CB	600	10	70C	20m∅	80m	3 0	10m	100C	2.0	16	2.0u	20	12u∅	20	90	125	5.0 ∅	
59#	CR5-602DB	600	10	70C	20m∅	80m	3 0	10m	100C	2.0	16	2.0u	20	8.0u∅	20	90	125	5 0 ∅	
60#	CR5-602EB	600	10	70C	20m∅	80m	3 0	10m	100C	2.0	16	2.0u	20	6.0u∅	20	90	125	5.0 ∅	
61#	CR5-6029B	600	10	70C	20m∅	80m	3 0	10m	100C	2.0	16	2.0u	20	4.0u∅	20	90	125	5 0 ∅	
62#	CR6-703RB	600	10	70C	28m∅	80m	3 0	5 0mt	100C	2.0	16	2.3u	20	80u	20	100	125	5.0	
63#	CR6-703RBA	600	10	70C	28m∅	80m	3 0	5 0mt	100C	2.0	16	2.3u	20	80u	200	100	125	5 0	
64	T610	600	10	70	60m	100m	5 0			2.2		3 0u			30 ∅	100	100J		M94
65	T610S	600	10	70	60m	100m	5 0			2 2		3.0u			30 ∅	100	100J		S131
66#	TAG10-600	600	10	70	25m	25m	3 0	1 5m	105	2.0	15					120	105	5.0	TO48
67#	TAG10S600	600	10	70	25m	25m	3 0	1 5m	105	2.0	15			12u		120	105	5 0	TO48
68	B01440	600	10	80C	20m	20m	1 5	1 5m	100C	1 6		1 5u	2 0	25u	20 §	150 §		600mt	M507
69	B05440	600	10	80C	20m	20m	1 5	1.5m	100C	1 6		1 5u	2.0	25u	20 §	150 §		600mt	S307
70	B18066	600	10	80C	20m	20m	1 5	1 5m	100C	1.6		1 5u	2 0	25u	20 §	150 §		600mt	
71	B19066	600	10	80C	20m	20m	1 5	1 5m	100C	1.6		1 5u	2.0	25u	20 §	150 §		600mt	
72▼	S6016B	600	10	80C	20m	20m	1.5	1 0m	100C	1 6	64	1.5u	2.0	25u§	20 §	150 §	125A	600mt	S307
73▼	S6016G	600	10	80C	20m	20m	1 5	1 0m	100C	1 6	64	1.5u	2.0	25u§	20 §	150 §	125A	600mt	M605
74▼	S6016H	600	10	80C	20m	20m	1.5	1 0m	100C	1 6	64	1 5u	2.0	25u§	20 §	150 §	125A	600mt	S361
75▼	S6016L	600	10	80C	20m	20m	1.5	1 0m	100C	1 6	64	1.5u	2.0	25u§	20 §	150 §	125A	600mt	M507
76▼#	CR10C12	600	10	84C		30m	2 5	3 0m	125J	1.6	30				20 △	150 △	125J	5 0 ∅	S350
77#	BTX32-600	600	10	85	25m	25m	3 0	1 5m	125	2.0	15					120	125	5.0	TO48
78#	BTX32S600	600	10	85	25m	25m	3 0	1.5m	125	2.0	15			12u		120	125	5 0	TO48
79#	BTX72-600	600	10	85	40m	40m	3 0	1 5m	125	2 0	15	1 4u	5.0	20u	100	120	125	5.0	TO48
80#	BTX72S600	600	10	85	40m	40m	3 0	1 5m	125	2.0	15	1 4u	5.0	12u	100	120	125	5 0	TO48
81#	T10N600C	600	10	85C	60m	20m	2 0	2.0m	125J	1 8	20	1 0u	10	20u§	50 §	140 §	125J	15	S131j%
82#	T10N600H	600	10	85C	60m	20m	2.0	2.0m	125J	1 8	20	1.0u	10	20u§	50 §	140 §	125J	15	M94e%
83#	TW10N600C	600	10	85C	60m	50m	3.0	2.0m	125J	1.7	10				5 0 §	100	125J	3.0	S131j%
84#	TW10N600H	600	10	85C	60m	50m	3 0	2 0m	125J	1 7	10				5.0 §	100	125J	3.0	M94e%
85#	CR10-602B	600 †	10	125C	150m	80m	3 0	5 0m	125C	2 0	10	2 0u	10	30u	20		125C	1 0	TO48
86#	2SF206	600 ∅	11	50B		40m	3.0	5.0m	100J	2 8	50					125	100J	500m	S236a
87#	2SF754	600	11	50B		40m	3 0	4.5m	100J	2 8	50		5.0	10u	20	125	125J	.50	S18d
88#	2SF754A	600	11	50B		40m	3 0	4 5m	100J	2.8	50		5 0	5.0u	20	125	125J	50	S18d
89#	2SF756	600	11	50B		40m	3 0	4 5m	100J	2 8	50		5.0	10u	20	125	125J	.50	S18d
90#	2SF756A	600	11	50B		40m	3 0	4 5m	100J	2 8	50		5.0	5 0u	20	125	125J	.50	S18d
91	UCR60	600 △	12	55C	50m	50m				1 2	3 0	400n	30	15u	250	60	125J	10 ∅	S296
92#	CR8-601C	600 †	12	70C	15m∅	25m	2.5	2.5m	125J	2.0	20	1.1u	8.0	50u	20 △	80 △	125J	5.0 ∅	TO64
93▼	TIC126M	600	12	70	40m	20m	1 5	2.0m	110C	1.4	12				100 ∅	100	110C	5.0	
94#	BTX65/600R	600	12	85B	10m§∅	65m	3 5	5.0m	125J	2.0	50	.40u	10	10u	120	200	125J	.5 †	TO48
95#	CR10-601B	600 †	12	85C	150m	80m	3.0	5.0m	125C	2.0	10	2.0u	10	30u			125C	1.0	TO48
96#	CR10-602AB	600	12	85C	20m∅	80m	3 0	10m	125C	2.0	50	2.6u	32	20u∅	20	120	125	5 0 ∅	
97#	CR10-602BB	600	12	85C	20m∅	80m	3.0	10m	125C	2.0	50	2.6u	32	15u∅	20	120	125	5.0 ∅	
98#	CR10-602CB	600	12	85C	20m∅	80m	3 0	10m	125C	2.0	50	2.6u	32	12u∅	20	120	125	5.0 ∅	
99#	CR10-602DB	600	12	85C	20m∅	80m	3 0	10m	125C	2.0	50	2.6u	32	8.0u∅	20	120	125	5.0 ∅	
100#	CR10-602EB	600	12	85C	20m∅	80m	3 0	10m	125C	2.0	5 0	2.6u	32	6.0u∅	20	120	125	5 0 ∅	
101#	CR10-6029B	600	12	85C	20m∅	80m	3 0	10m	125C	2 0	5 0	2.6u	32	4.0u∅	20	120	125	5.0 ∅	
102	40752	600	12 5	75C	20m	15m	2.0			2.4	100	2.0u	30	20u	10 §	200	100C	40 ∅	M94
103	40756	600	12.5	75C	20m	15m	2.0			2 4	100	2.0u	30	20u	10 §	200	100C	40 ∅	S131
104	40760	600	12 5	75C	20m	15m	2 0			2.4	100	2 0u	30	20u	10 §	200	100C	40 ∅	S304
105#	8RCM60	600	12 6	65B	65m	85m	3 0	3 0m	105	2 6	8.0			20u	20	100	105	.50	TO48
106#	8RCV60	600	12 6	105	50m	45m	2 9	3.0m	105	2.6			100	10u	100	100	105	.50	TO48
107#	CR12-703RB	600	14.5	75C	28m∅	60m	3 0	5 0mt	125C	2.0	32	2 3u	20	85u	20	160	125	5 0	
108#	CR12-703RBA	600	14 5	75C	28m∅	60m	3.0	5.0mt	125C	2 0	32	2.3u	20	85u	200	160	125	5 0	
109	T615	600	15		60m	100m	5 0			2 2		3 0u				100	100J		M94
110	T615S	600	15		60m	100m	5 0			2 2		3.0u				100	100J		S131

SYMBOLS AND CODES EXPLAINED IN INTERPRETER

6. SILICON CONTROLLED RECTIFIERS

IN ORDER OF (1) PEAK REV. VOLT., (2) MAX. CONT. CUR., (3) TEMPERATURE, (4) TYPE No.

LINE No	4 TYPE No	1 PRV and VBO (V)	MAX. CONT. CURRENT 2 Idc (A)	3 at TEMP (°C)	MAX. HOLD. CUR Ih @ 25°C (A)	MAX. GATE FIRING SPEC at 25°C Igf (A)	Vgf (V)	MAX SAT I Ir@PRV and Is@VBO (A)	at TEMP (°C)	MAX. FWD. VOLT. DROP at 25°C Vf (V)	@ If (A)	SWITCHING TIME at 25°C Ton (s)	for If (A)	Toff (s)	MIN. dV/dt @ 25°C (V/us)	ABS MAX. RATINGS 1Cy PK SURGE I@25°C (A)	MAX TEMP (°C)	MAX GATE POWER (W)	DWG. No.
1#	BTY87/600R	600	15	61A	10mØ§	65m	3 5	5.0m	125J	3 0	50	3 0u§	10	15u	100	106	125J	50	TO48
2#	TAG15-600	600	15	70	50m	50m	3 0	1 5m	105	2 0	20					150	105	5 0	TO48
3#	TAG15S600	600	15	70	50m	50m	3 0	5 0m	105	2 0	20			12u		150	105	5.0	TO48
4#	BTX70-600	600	15	85	50m	50m	3 0	1 5m	125	2.0	20					150	125	5 0	TO48
5#	BTX70S600	600	15	85	50m	50m	3 0	1 5m	125	2 0	20			12u		150	125	5 0	TO48
6#	BTX74-600	600	15	85	50m	50m	3 0	1 5m	125	2 0	20	1 4u	10	20u	100	150	125	5 0	TO48
7#	BTX74S600	600	15	85	50m	50m	3 0	1 5m	125	2 0	20	1 4u	10	12u	100	150	125	5.0	TO48
8	B15006	600	15 8	80C	25m	25m	2 0	1 5m	100C	1 6		1 8u	2 0	25u	20 §	200 §		800mt	M505
9	B16006	600	15 8	80C	25m	25m	2 0	1 5m	100C	1 6		1.8u	2.0	25u	20 §	200 §		800mt	M504
10	B17006	600	15 8	80C	25m	25m	2 0	1 5m	100C	1 6		1 8u	2.0	25u	20 §	200 §		800mt	S308
11	B18006	600	15 8	80C	25m	25m	2 0	1 5m	100C	1 6		1 8u	2 0	25u	20 §	200 §		800mt	
12	B19006	600	15 8	80C	25m	25m	2 0	1 5m	100C	1.6		1 8u	2 0	25u	20 §	200 §		800mt	
13▼	S6025	600	15 8	80C	25m	25m	2.0	1 0m	100C	1.6	100	1 8u	2 0	25u§	20 §	225 §	125A	800mt	M606
14▼	S6025C	600	15 8	80C	25m	25m	2 0	1 0m	100C	1 6	100	1 8u	2 0	25u§	20 §	225 §	125A	800mt	M607
15▼	S6025D	600	15 8	80C	25m	25m	2.0	1 0m	100C	1.6	100	1 8u	2 0	25u§	20 §	225 §	125A	800mt	S362
16▼	S6025G	600	15 8	80C	25m	25m	2 0	1 0m	100C	1 6	100	1 8u	2 0	25u§	20 §	225 §	125A	800mt	M605
17▼	S6025H	600	15 8	80C	25m	25m	2 0	1 0m	100C	1 6	100	1 8u	2 0	25u§	20 §	225 §	125A	800mt	S361
18	C36M△	600	16	25B		80m	3 5	2.5mØ	100J	1 3 Ø	10					125	100J	5.0	TO48
19	SCR860	600 ⊘	16	25C	100m	75m	3 5	6 0m△	100C	3 0	50	3 0u§	10	30u§		150 §	100J	15	TO48
20#	TR6	600	16	25A	50mØ	80m	3 0	3 0m	125J	2 0	50	2 0u§	10	50u§	50 Ø	250		240m	S313
21#	SF10J11	600	16	26S		80m	3 5	5 0m	100J	3 0	50					113	100	5 0	S18
22	202M	600	16	58C	10m§Ø	80m	3 5	5 0m	100J	1 6	10					125	100J	50	TO48
23♦#	BStC0340	600	16	59C	30m	30m	2 5	3 0	125J	1 9	27				200	180 §	125	10	
24	2N690	600	16	65C		80m$	3 0 $	2 5m	65C	2 0 †	16						125C	5 †	TO48
25	JAN2N690	600	16 △	65C	50m	80m	3 0	2 0m	25	2 0 †	50	5 0u	10	40u		150	125A	5 †	TO48
26	RTT0260	600	16	65C	200m	50m	3 0	2 0m	100	2 5	50	20u	16		100	150	100C		TO48
27	RTT0360	600	16	65C	50m	25m	2 0	1.0m	100	2 0	50	20u	16		100	150	100C		TO48
28	RTT0560	600	16	65C	200m	50m	3 0	2.0m	125	2 5	50	.20u	16		100	150	125C		TO48
29	RTT0660	600	16	65C	50m	25m	2 0	1 0m	125	2 0	50	20u	16		100	150	125C		TO48
30	RTU0260	600	16	65C	20	50m	3 0	2 0m	100	2 5	50	200n	16		100	150	100C		S131
31	RTU0360	600	16	65C	50m	25m	2 0	1 0m	100	2.0	50	200n	16		100	150	100C		S131
32	RTU0560	600	16	65C	20	50m	3 0	2 0m	125	2.5	50	200n	16		100	150	125C		S131
33	RTU0660	600	16	65C	50m	25m	2 0	1 0m	125	2 0	50	200n	16		100	150	125C		S131
34	MCR3818-8	600	16	70C	50m	40m	1 5			1 2	20	1 0u	20	15u	50 Ø§	240 §	100J	500mt	M94b
35	MCR3918-8	600	16	70C	50m	40m	1 5			1 2	20	1.0u	20	15u	50 Ø§	240 §	100J	500mt	S131k
36#	BTY91/600R	600	16	75B	10mØ§	40m	3.0	5 0m	125J	2.0	50	3 0u§	10	20u§	100	136	125J	5.0	TO48
37#	11RC60	600	16 △	85B	20m	40m	3 0	2 5m		2 3	10	3 0u	10	25u	20	125	125A	5 0 Ø	S141c
38♦#	BStD0340	600	16	85C	30m	30m	2 5	3 0	125J	1 6	33				200	250 §	125	10	
39	203M	600	16	92C	8m§Ø	80m	3 7	5 0m	100J	1 6	10					125	100J	.50	TO48
40	16C60	600	16	125J	50m	15m	2 0	10m	125J	2 0	50	7 0u	16	75u§		150	125J	5 0 Ø	TO48#△
41	16C60B	600	16	125J	50m	40m	2.0	10m	125J	2 0	50	7 0u	16	75u§	25	150	125J	5 0 Ø	TO48#△
42	16C60C	600	16	125J	50m	40m	2 0	10m	125J	2.0	50	7.0u	16	75u§		150	125J	5 0 Ø	TO48#△
43#	CR16-602B	600 †	16	125C	120m	40m	3.0	5 0m	125C	2 0	16	2 0u	10	20u	20		125C	1 0	TO48
44#	T14F600C	600	17	85C	120m	50m	3 0	10m	125J	2 5	50	1 5u⊘	10	15u§	200 §	200 §	125J		S63g%
45#	T14F600E	600	17	85C	120m	50m	3 0	10m	125J	2.5	50	1.5u⊘	10	15u§	200 §	200 §	125J		M329%
46#	12RCM60	600	18 8	65B	65m	85m	3 0	3 0m	105	2 2	12			20u	20	150	105	50	TO48
47#	T15N600C	600	19	85C	200m	100m	3 0	10m	125J	2 5	50	2 5u⊘	10	80u§	20 §	300 §	125J		S63g%
48#	T15N600E	600	19	85C	200m	100m	3 0	10m	125J	2 5	50	2 5u⊘	10	80u§	20 §	300 §	125J		M351%
49#	CS16-06	600	19	95	50m	80m	3 0	3 0m	125	1 8	60			60u	200	350	125	10	
50#	BTX12/600R	600	20	25$	40m§	50m	3 0			3 5 §	175	4 0u§	10	10u§	20 §	250	125J	5 0	S189
51▼#	CR20A12	600	20	57C		50m	3 0	3 0m	100J	1.8	60					300 △	100J	5.0 Ø	S106b
52#	2SF457	600	20	58C	10mØ	50m	3 5	3 0mØ	100	1 3	20					300	100J	5 Ø	S106b
53	2SF457A	600	20	58C	10mØ	50m	3 5	3 0mØ	100	1 3	20		20	15u§	100 △	300	100	5 0 Ø	S106b
54#	TAG20-600	600	20	60	50m	50m	3 0	1 5m	105	1.7	30					175	105	5.0	TO48
55#	TAG20S600	600	20	60	50m	50m	3 0	1 5m	105	1 7	30			12u		175	105	5 0	TO48
56#	BTX33-600	600	20	70	50m	50m	3 0	1 5m	125	1 7	30					175	125	5.0	TO48
57#	BTX33S600	600	20	70	50m	50m	3 0	1 5m	125	1 7	30			12u		175	125	5.0	TO48
58▼	C138M10M	600	20	70	150m	180	3 0	4.0m	125	4 0	100		10	10	200	200	125	40	TO48
59▼	C138M20M	600	20	70	150m	180	3 0	4 0m	125	4.0	100		10	20	200	200	125	40	TO48
60▼	C139M10M	600	20	70	150m	180	3 0	4.0m	125	4 0	100		10	10	200	200	125	40	TO48
61▼	C139M20M	600	20	70	150m	180	3 0	4 0m	125	4.0	100		10	10	200	200	125	40	TO48
62#	CR20EY12	600	20	74C		50m	3 0	6 0m	125J	2 5	60		20	15u⊘	100 △	300 △	125J	5 0 Ø	S106b
63#	6TW6	600	20	75C$	25m	50m	2 0	10m	100J	1.8 §	50	2 5u§	20	20u§		300	150S	2 0	
64#	CR16-601B	600 †	20	75C	120m	40m	3 0	5 0m	125C	2 0	16	2 0u	10	30u			125C	1 0	TO48
65#	CR16-602AB	600	20	75C	7.0mØ	60m	3 0	10m	125C	2 0	50	2.5u	50	20u⊘	20	160	125	5 0 Ø	
66#	CR16-602BB	600	20	75C	7.0mØ	60m	3 0	10m	125C	2 0	50	2 5u	50	15u⊘	20	160	125	5 0 Ø	
67#	CR16-602CB	600	20	75C	7 0mØ	60m	3 0	10m	125C	2 0	50	2 5u	50	12u⊘	20	160	125	5 0 Ø	
68#	CR16-602DB	600	20	75C	7 0mØ	60m	3.0	10m	125C	2 0	50	2 5u	50	8 0u⊘	20	160	125	5 0 Ø	
69#	CR16-602EB	600	20	75C	7 0mØ	60m	3.0	10m	125C	2 0	50	2 5u	50	6 0u⊘	20	160	125	5.0 Ø	
70#	CR16-6029B	600	20	75C	7 0mØ	60m	3 0	10m	125C	2 0	50	2 5u	50	4 0u⊘	20	160	125	5 0 Ø	
71#	BTX81-600R	600	20	85B	100m	80m	3 5			1 8	50						125J	1 0 †	S94a
72#	CR20F12	600	20	86C		50m	3.0	4 0m	125J	1 8	60				50 △	300 △	125J	5 0 Ø	S106b
73	2N5204	600	22	40A	20 $	80m$	3.0 $	3 3m	125A	2 3	70				100 §	300	125A	50 †	TO48
74#	2SF211A	600 ⊘	22	64B		40m	3 0	5 0m	125J	2 0	50					150	125J	500m	S236a
75#	2SF766	600	22	64B		40m	3.0	4 5m	125J	2 0	50		10	10u	20	150	125	50	S18d
76#	2SF766A	600	22	64B		40m	3 0	4 5m	125J	2 0	50		10	5 0u	20	150	125	.50	S18d
77	2N3873	600	22	65		80m	3 0	4 0m	100	1 9 †	69					350	100		M94
78	2N3899	600	22	65		80m	3 0	4 0m	100	1.9 †	69					350	100		S131
79	B15026	600	22	80C	40m	25m	2 0	1.5m	100C	1 6		1 8u	2 0	25u	20 §	300 §		800mt	M505
80	B16026	600	22	80C	40m	25m	2 0	1 5m	100C	1 6		1 8u	2 0	25u	20 §	300 §		800mt	M504
81	B17026	600	22	80C	40m	25m	2 0	1 5m	100C	1.6		1 8u	2 0	25u	20 §	300 §		800mt	S308
82	B18026	600	22	80C	40m	25	2 0	1 5m	100C	1.6		1.8u	2 0	25u	20 §	300 §		800mt	
83	B19026	600	22	80C	40m	25m	2 0	1.5m	100C	1.6		1 8u	2 0	25u	20 §	300 §		800mt	
84▼	S6035	600	22	80C	40m	25m	2 0	1.0m	100C	1.6	141	1 8u	2 0	25u§	20 §	325 §	125A	800mt	M606
85▼	S6035C	600	22	80C	40m	25m	2 0	1 0m	100C	1 6	141	1 8u	2 0	25u§	20 §	325 §	125A	800mt	M607
86▼	S6035D	600	22	80C	40m	25m	2 0	1.0m	100C	1.6	141	1.8u	2.0	25u§	20 §	325 §	125A	800mt	S362
87▼	S6035G	600	22	80C	40m	25m	2 0	1 0m	100C	1 6	141	1 8u	2.0	25u§	20 §	325 §	125A	800mt	M605
88▼	S6035H	600	22	80C	40m	25m	2 0	1.0m	100C	1.6	141	1.8u	2 0	25u§	20 §	325 §	125A	800mt	S361
89#	TS635	600	22.5	25A	20mØ	80m	3 0	6 0m	125J	2 2	70	5 0u§	15	50u§	50 Ø§	250		240m	S313
90#	CR18-703RB	600	23	70C	28mØ	40m	3 0	5.0mt	125C	2.1	57	2.3u	20	85u	20	180	125	5.0	
91#	CR18-703RBA	600	23	70C	28mØ	40m	3.0	5 0mt	125C	2.1	57	2 3u	20	85u	200	180	125	5 0	
92#	T18F600C	600	23	85C	120m	50m	3 0	10m	125J	2 3	60	1 5u⊘	15	20u§	50 §	300 §	125J		S63g%
93#	T18F600E	600	23	85C	120m	50m	3.0	10m	125J	2 3	60	1 5u⊘	15	20u§	50 §	300 §	125J		M353%
94	MCR1718-8	600 △	25	$	6 0mØ	50m	7 0			1.3	25				100 Ø	100	125J	1.0 †	TO48
95	C37M△	600	25 △	25C		80m	3 5	5 0m	105	2.3 †	30					125	105C	50	TO48
96	C37E⊘	600	25	37C	20mØ	80m	3 0	2.0mØ	105J	2 3 †	30	1 4u	5 0			175	105J	.50 †	TO48
97	10RC60A	600 ⊘	25 △	45C	10mØ	90m	2.5	2 5mØ	125C	2 8	50 †	3 0u	10	30u	25 §	200 △	125J	50 †	TO48
98	10RCF60A	600 ⊘	25 △	45C	10mØ	90m	2.5	2 5mØ	125C	2.8	50 †	3.0u	10	12u§	25 §	200 △	125J	500mt	TO48
99#	SF16J11	600	25	57S		40m	3.0	5 0m	125J	1 9	50					135	125	5 0	S18
100#	2N690AS	600	25	60	50m	40m	3.0	1 5m	125	1.7	30	1 4u	10	12u	100	200	125	5 0	TO48
101#	2N690S	600	25	60	50m	40m	3.0	1.5m	125	1 7	30	1 4u	10	12u	25	200	125	5 0	TO48
102	201M	600	25	60C	8m§Ø	40m	3 0	5 0m	125J	2 0	50					150	125J		TO48
103#	BTX73-600	600	25	60	50m	50m	3 0	1 5m	125	1.7	30	1 4u	10	20u	100	200	125	5 0	TO48
104#	BTX73S600	600	25	60	50m	50m	3 0	1 5m	125	1.7	30	1 4u	10	12u	100	200	125	5.0	TO48
105#	SH16J11	600	25	60C	70m	50m	3 0	6 0m	125J	1.9	50	6 0u	32	10u	100 △	135	125J	5.0 Ø	S341
106	2N690A	600	25	65C		80m	3 0	2 5m	65C	2.0	16			25u		150	125C	50	TO48
107#	21RC60	600	25 △	75B	20m	40m	3 0	2 0		2.2	16	3 0u	10	25u	20	150	125A	5 0 Ø	S141c
108#	CS22-06	600	25	75	200m	100m	3 0	10m	125	2 1	70			80u	200	400	125	75	
109	2N5809	600	25	80	100m$	120m$	4 0 $			1.6	35					200 §	115C	500mt	S18
110#	24TB6	600	25	84B		10	3 0	7 5m		2.3	31					180	125	1 0	S266

SYMBOLS AND CODES EXPLAINED IN INTERPRETER

6. SILICON CONTROLLED RECTIFIERS

IN ORDER OF (1) PEAK REV. VOLT., (2) MAX. CONT. CUR., (3) TEMPERATURE, (4) TYPE No.

LINE No	4 TYPE No.	1 PRV and VBO (V)	MAX. CONT. CURRENT 2 Idc (A)	3 at TEMP (°C)	MAX. HOLD. CUR Ih @ 25°C (A)	MAX. GATE FIRING SPEC at 25°C Igf (A)	Vgf (V)	MAX SAT I Ir@PRV and Is@VBO (A)	at TEMP (°C)	MAX. FWD. VOLT. DROP at 25°C Vf (V)	@ If (A)	SWITCHING TIME at 25°C Ton (s)	for If (A)	Toff (s)	MIN. dV/dt @ 25°C (V/us)	ABS. MAX. RATINGS 1Cy PK SURGE I@25°C (A)	MAX TEMP (°C)	MAX GATE POWER (W)	DWG. No
1#	26TB6	600	25	84B		10	3 0	7.5m		2.3	31					180	125	1.0	S63a
2#	BTX82-600R	600	26	87B	10	80m	3.5					5.0u		50u		550 *	125J	5.0 Ø	TO48
3#	T22N600C	600	28	85C	200m	100m	3.0	10m	125J	1.9	60	2 5u∅	20	80u§	20 §	400 §	125J		S63g%
4#	T22N600E	600	28	85C	200m	100m	3 0	10m	125J	1.9	60	2 5u∅	20	80u§	20 §	400 §	125J		M353%
5#	BTX13/600R	600	30	25$	40m§	50m	3.0			3.5 §§	250	4.0u§	10	6 0u§	20 §	300	125J	5 0	S189
6#	CR30-06	600	30	50	20	2 0	10		125	1.8	100	4.5u	30	25u	20	350	125	5 0	S314
7#	23TB6	600	31	82B	150m	100m	3.0	7 5m		2.4	63					260	125C	1.0	S266
8#	25TB6	600	31	82B	150m	100m	3 0	7.5m		2.4	63					260	125C	1 0	S63a
9#	CR25-601B	600	32	25	26m	40m	3 0					2.5u	25	150u		210	125	5 0	TO48
10#	8TW6	600	32	75C$	25m	50m	2 0	10m	100J	1.8 §	90	2.5u§	32	20u§		550	150S	2.0	
11#	BTX66/600R	600	32	85B	10mØ§	80m	3.0	12m	125J	3 3	500	.50u	50	15u	40	680 *	125J	1 †	TO94
12	C137M	600	35 △	18C	.10	40m	3 0 §	3 5m	120C	2.3	70				100	360	120J	2 0 †	TO48
13	SCR166A	600 ∅	35	25C	50m	25m	2.0	2.0m△	125C	2.0	50	1.0u§	200	20u§		200 §	125J	15	TO48
14	SCR1660A	600 ∅	35	25C	50m	40m	3.0	2 0m△	125C	2.0	50	1.5u§	10	20u§		250 §	125J	15	TO48
15	SCRF166A	600 ∅	35	25C	100m	25m	2 0	2.0m△	125C	2.0	50	20u§	10	6.0u§		200 §	125J	15	TO48
16	SCRF1660	600 ∅	35	25C	100m	40m	3.0	2.0m△	125C	2.0	50	2 0u§	10	12u§		200 §	125J	15	TO48
17	16RC60A	600 ∅	35 △	35C	20mØ	40m	2 0	2.5mØ	125C	2.3	70 †		10	75u§	10 §	250 △	125J	50 †	TO48
18	16RCF60A	600 ∅	35 △	35C	20mØ	40m	2 0	800uØ	125C	2.3	70 †		10	12u§	25 §	250 △	125	50 †	TO48
19	18RC60	600 ∅	35 △	45C	20mØ	40m	2 0	2 5mØ	125C	2.0	70 †					350 △	125J	50 †	TO48
20	MCR3835-8	600	35	47C	50m	40m	1 5			1.2	35	1 0u	35	15u	50 Ø§	325 §	100J	500m	M94b
21	MCR3935-8	600	35	47C	50m	40m	1.5			1.2	35	1 0u	35	15u	50 Ø§	325 §	100J	500m	S131k
22#	BStE0240	600	35	53C	200m	100m	3 0	10m	125J					150u§	20 §	300	125J		S131h
23	40683	600	35 △	60C	70m	40m	2.0			25	300	2 0u	30	20u	10	300	100C	500m†	S304
24	C40E∅	600	35	62C	10mØ	40m	2 5	2.0mØ	125J	2.0 †	50	1 4u	5.0	8 0u	20 §	150	125J	50 †	TO48
25	NL570M	600	35	62	100m	80m	3 0			1.7	50	1 4u	5 0	30u	200	600	125	500m	
26▼	C144M15M	600	35 △	63	125	150	3.0	4.0	125	3.0	100		10	15	200	250	125	40	TO48
27▼	C144M30M	600	35 △	63	125	150	3 0	4 0	125	3.0	100		10	30	200	250	125	40	TO48
28	40216	600	35 △	65C	70m	80m	2 0	10m	125C			1 2u	30	20u	20	900	125C	50 †	TO48
29	22RC60	600 ∅	35 △	70C	20mØ	40m	2 0	2 5mØ	150C	2 3	70 †				20	225 △	150J	500m†	TO48
30#	TK6FA	600	35	85C		300m	3.0	10m	125J	2.0	100	3.0u§	100	20u§	100 §	700		900m	S317
31#	TK6FB	600	35	85C		300m	3.0	10m	125J	2 0	100	3 0u§	100	40u§	100 §	700		900m	S317
32▼#	5TCA60	600	35	125	60	100m	3 0							100u	100 §	1.5k	125	10	
33	35C60	600	35	125J	200m§	200m	3 0	10m	125J	2.5	220	10u	35	40u§		900	125J	15 Ø	TO94#△
34	35C60B	600	35	125J	200m§	200m	3 0	10m	125J	2 5	220	10u	35	40u§	100	900	125J	15 Ø	TO94#△
35	35C60BF	600	35	125J	200m§	200m	3 0	10m	125J	2.5	220	10u	35	40u§	100	900	125J	15 Ø	TO83#△
36	35C60F	600	35	125J	200m§	200m	3 0	10m	125J	2 5	220	10u	35	40u§		900	125J	15 Ø	TO83#△
37#	CR30-603A	600	36	25	66m	60m	3 0			1 4	30	20u	30	73u		500	125	5.0	TO49
38#	CR30-604A	600	36	25	66m	60m	3 0			1.4	30		30	20u		500	125	5 0	TO49
39#	CR30-704AA	600	38	70C	20mØ	80m	3 0	10m†	125C	2.5	100	20u	100	20u∅	20	660	125	5.0 Ø	TO49
40#	CR30-704BA	600	38	70C	20mØ	80m	3.0	10m†	125C	2 5	100	20u	100	15u∅	20	660	125	5 0 Ø	TO49
41#	CR30-704CA	600	38	70C	20mØ	80m	3.0	10m†	125C	2.5	100	20u	100	12u∅	20	660	125	5 0 Ø	TO49
42#	CR30-704DA	600	38	70C	20mØ	80m	3.0	10m†	125C	2.5	100	20u	100	8 0u∅	20	660	125	5.0 Ø	TO49
43▼#	6TC60	600	40			100m	3.0			1.3		10u		150u	50 §Ø	1 5k*	125J		S183a
44#	2SF736	600	40	70B		40m	3.0	7.0m	125J	1 7	50				100	300	125J	500m	S18c
45#	BStF0440	600	40	70C		100m	2 0	5 0m	110J					20u§	50 §	360	110J		S18f
46#	27TB6	600	40	74B		10	3.0	15m		2 1	78					450	125C	1.0	S63a
47#	BStF0540	600	40	78C		100m	2.0	5.0m	120J					150u§	50 §	320	120J		S18f
48#	CR24-703RB	600	40	80C	28mØ	40m	3.0	5 0m†	125C	1.4	50	2.3u	20	85u	20	320	125	5 0	
49#	CR24-703RBA	600	40	80C	28mØ	40m	3.0	5.0m†	125C	1 4	50	2.3u	20	85u	200	320	125	5 0	
50#	T30F600C	600	40	85C	300m	100m	3.0	10m	125J	1.8	100	2.0u∅	25	25u§	50 §	800 §	125J		S63g%
51#	T30F600E	600	40	85C	300m	100m	3 0	10m	125J	1.8	100	2.0u∅	25	25u§	50 §	800 §	125J		M351%
52♦	40RCS60	600 ∅	40	87C	200m	110m	3.0	1 5m	105J	1.7 †	40	4.5u	10		25 §	1 0k§	105J	500m†	S363
53▼#	6TCA60	600	40	125	60	100m	3 0							100u	100 §	1 5k	125	10	
54	251M	600	40	125J		100m	3 0	10m	125J	1.7	50	4.0u	50	100u	300	1.2k*	125J	3 †	Z59
55▼#	SKT45-06AT	600	45	85C	130m	100m	3.0			1.8	50			20u∅	50 §Ø	800	130A	300m	S354
56▼#	SKT45-06BS	600	45	85C	130m	100m	3.0			1.8	50			15u∅	50 §	800	130A	300m	S354
57▼#	SKT45-06BT	600	45	85C	130m	100m	3.0			1.8	50			20u∅	50 §	800	130A	300m	S354
58▼#	SKT45-06CS	600	45	85C	130m	100m	3 0			1 8	50			15u∅	200 §	800	130A	300m	S354
59▼#	SKT45-06CT	600	45	85C	130m	100m	3.0			1 8	50			20u∅	200 §	800	130A	300m	S354
60▼#	SKT45-06DS	600	45	85C	130m	100m	3.0			1.8	50			15u∅	500 §	800	130A	300m	S354
61▼#	SKT45-06DT	600	45	85C	130m	100m	3 0			1.8	50			20u∅	500 §	800	130A	300m	S354
62▼#	SKT45-06ET	600	45	85C	130m	100m	3.0			1.8	50			20u∅	1.0k§	800	130A	300m	S354
63▼#	T130N600	600	45	85C	200m	150m	1.4	30m	125J	1 8	500	7 5u	100	60u	50	3.5k§	125J		M330d
64	NLE45M	600	45	89C	.10	70m	2.5	4.0m	125J	3 0	500	5.0u	50	30u	100	1.2k	125J	.50 †	TO83
65	NLE46M	600	45	89C	.10	70m	2.5	4.0m	125J	3 0	500	5.0u	50	30u	100	1.2k	125J	.50 †	TO94
66▼#	SKT46-06A	600	45	105C	130m	100m	3.0			1.8	50			50u	50 §	800	150A	300m	S354
67▼#	SKT46-06B	600	45	105C	130m	100m	3 0			1.8	50			50u	50 §	800	150A	300m	S354
68▼#	SKT46-06C	600	45	105C	130m	100m	3.0			1 8	50			50u	200 §	800	150A	300m	S354
69▼#	SKT46-06D	600	45	105C	130m	100m	3 0			1.8	50			50u	500 §	800	150A	300m	S354
70▼#	SKT46-06E	600	45	105C	130m	100m	3.0			1.8	50			50u	1.0k§	800	150A	300m	S354
71#	28TB6	600	47	73B		.10	3.0	15m		1 9	95					550	125	1.0	S63a
72#	CR50-06	600	50	50	20	2 0	10		125	1.8	150	4 5u	50	25u	20	650	125	5.0	S142a
73#	2SF1129	600	50	65		100m	3 0	10m	125J	2.3	300		30	30	100	700	125J	500m	S331
74#	BTY95/600R	600	50	75B	10mØ§	80m	3.0	12m	125J	3.3	500	3 0u	50	20u	10	680	125J	5.0	TO49
75	C146M	600	55 △			100m	3.0							40u∅			125A		S236
76#	TK6	600	55	60C	100m	125m	3.0	10m		2.0	100	5 0u	50	30u	20 Ø	700	100C	.50	TO49
77#	2SF776	600	55	68B		100m	3 5	10m	100J	2.7	500		30	30u	20	700	100	50	S189d
78#	2SF776A	600	55	68B		100m	3.5	10m	100J	2.7	500		30	15u	20	700	100	.50	S189d
79#	29TB6	600	55	68B		.10	3 0	15m		1.8	110					650	125	1 0	S63a
80	NL576M	600	55	82	500m	150m	3 0			2.4	110				10	700	125	2 0	
81	NL577M	600	55	82C	.50	.15	3 0	6 0m	125J	2 4	110				200	700	125J	2.0 †	TO103
82	C45M△	600	55 △	85C	100m	75m	3 0	5 0m	120C	3.1 △	500	5 0u	50	30u§	20 §	700	125J	500m	S315
83	C46M△	600	55 △	85C	100m	75m	3 0	5 0m	120C	3.1 △	500	5.0u	50	30u§	20 §	700	125J	500m	TO94
84	C45E∅	600	55	89C	100m	70m	3.0	4.0m	125J	3.0 †	500	5.0u	50	30u§	100 §	1.2k	125J	50 †	TO83
85	C46E∅	600	55	89C	100m	70m	3 0	4.0m	125J	3.0 †	500	5.0u	50	30u§	100 §	1.2k	125J	50 †	TO49
86	NL555E	600	55	89C	300m	150m	2 5	10m	125J	3.5 †	500	8.0u	50	100u§	200 §	1 2k	125J	2 †	TO49
87	NL556E	600	55	89C	300m	150m	2.5	10m	125J	3.5 †	500	8.0u	50	100u§	200 §	1.2k	125J	2 †	TO83
88	NLF45E	600	55	89C	100m	70m	3.0	4 0m	125J	3.0 †	500	5.0u	50	30u§	100 §	1 2k	125J	500m†	TO83
89	NLF46E	600	55	89C	100m	70m	3.0	4.0m	125J	3.0 †	500	5.0u	50	30u§	100 §	1.2k	125J	500m†	TO94
90	2191M	600	55	94C		200m	3 0	10m	125J	2.0 §	50	3 5u	50	15u	100	1.2k*	125J	3 †	Z59
91	2192M	600	55	94C		200m	3 0	10m	125J	2.0 §	50	8 0u	50	20u	100	1 2k*	125J	3 †	Z59
92	555M	600	55	99C		150m	3 0								200		125J		TO49
93	556M	600	55	99C		150m	3.0								200		125J		TO83
94#	2SF706	600	55	100C		100m	3 5	10m	100J	2 7	500					700	100J	5 †	S104a
95#	5TC60	600	55	125	20m	45m	3.0			1 3	50	5 0u	50	25u		500	100J	20	S185
96	C145M	600	55 △	125J	500m	150m	3 0	10m	125C	2.4 †	110				200	700 △	125J	2 †	TO103
97#	ATS60	600	60	25		100m	2 0												
98▼#	BStG0340	600	60	40A	180m$	300m$	2 0	10m	105J	1 6 $	29	5 0u	38	40u	200	545	105J	2.0	S189C#
99#	BTX49-600R	600 §	60	85C	150m	80m	3 0	20m	125J	3 5	500	5 0u	50	50u		1 0k	125J	1 0 †	TO94
100#	BTX67/600R	600	62	85B	10mØ			12m	125J	2 5	500	50u	50	15u	40	900	125J	1 †	TO94
101#	T50F600	600	62 5	85C	300m	100m	3 0	20m	125J	2.2	160	2 0u∅	25	30u§	50 §	800 §	125J		M330b%
102#	T50N600	600	62 5	85C	300m	100m	3.0	20m	125J	2 2	160	2 5u∅	25	80u§	20 §	800 §	125J		M330b%
103	2515M	600	63	120C		10	3 0	15m	150J	1 7	50				300	1 2k	150J		TO83
104#	CR50-603A	600	64	25	73m	100m	3.0									600	125	5 0	TO49
105#	CR50-604A	600	64	25	73m	100m	3 0					5 5u	50	20u		600	125	5 0	TO49
106▼#	BStG0240	600	65	40A	180m$	300m$	2 0	10m	105J	1 3 $	40	5.0u	42	150u	200	690	105J	2.0	S189C#
107#	40T7	600	65	75B	200m	200m	25	10m†		2 1 †	200					1.1k	125B	1 0	M308
108#	CR50-704AA	600	66	75C	32mØ	60m	3 0	10m†	125C	1 7	150	5 5u	150	20u∅	20	760	125	5 0 Ø	TO49
109#	CR50-704BA	600	66	75C	32mØ	60m	3 0	10m†	125C	1.7	150	5 5	150	15u∅	20	760	125	5 0 Ø	TO49
110#	CR50-704CA	600	66	75C	32mØ	60m	3 0	10m†	125C	1 7	150	5.5	150	12u∅	20	760	125	5.0 Ø	TO49

SYMBOLS AND CODES EXPLAINED IN INTERPRETER

6. SILICON CONTROLLED RECTIFIERS

IN ORDER OF (1) PEAK REV. VOLT., (2) MAX. CONT. CUR., (3) TEMPERATURE, (4) TYPE No.

LINE No.	4 TYPE No.	1 PRV and VBO (V)	MAX. CONT. CURRENT 2 Idc (A)	3 at TEMP (°C)	MAX. HOLD. CUR Ih @ 25°C (A)	MAX. GATE FIRING SPEC at 25°C Igf (A)	Vgf (V)	MAX SAT I Ir@PRV and Is@VBO (A)	at TEMP (°C)	MAX. FWD. VOLT. DROP at 25°C Vf (V)	@ If (A)	SWITCHING TIME at 25°C Ton (s)	for If (A)	Toff (s)	MIN. dV/dt @ 25°C (V/us)	ABS. MAX. RATINGS 1Cy PK SURGE I@25°C (A)	MAX TEMP (°C)	MAX GATE POWER (W)	DWG. No.
1#	CR50-704DA	600	66	75C	32mØ	60m	3.0	10m†	125C	1.7	150	5.5	150	8.0u☑	20	760	125	5.0 Ø	TO49
2#	CR50-704LA	600	66	75C	32mØ	60m	3.0	10m†	125C	1.7	150	5.5u	150	25u☑	20	760	125	5.0 Ø	TO49
3▼#	BTX38/600R	600	70	25C	10m§	70m	3.0	30	25J	25 §	500 §	3.0u§	50	10u	10	900	125J	500m	S220
4	2N1806	600	70	62C		130m$	3.0 $	3.3m	62C	1.8 †	70					1.0k*	125C	.50 †	TO49
5	2N3091	600	70 △	62C		200m$	3.0 $	2.5m	62C	1.9 †	70				20	1.0k§*	125C	.50 †	TO49
6	2N3099	600	70 △	62C		200m$	3.0 $	2.5m	62C	1.9 †	70				20	1.0k§*	125C	.50 †	TO49
7	2N1799	600	70 △	65C		130m$	3.0 $	3.3mØ	65C	1.8 †	70					1.0k*	125C	.50 †	TO83
8	2N3987	600	70	70C		200m$	3.0 $	15m	125C	2.9 †	220			50u	200 §	1.0k*	125C	10 Ø	TO94
9#	CR70B12	600	70	74C		70m	3.0	6.0m	125J	1.7	220				10 △	1.5k△	125J	5.0 Ø	S189d
10#	36TB6	600	70	75B		.15	3.0	15m		2.0	140					760	125	1.0	S63d
11	2N4364	600	70	82C	200m	250m$	5.0 $	10m	125C	2.0 †	70				100	1.6k*§	125C	15 Ø	TO94
12	2N4374	600	70	82C	200m	250m$	5.0 $	10m	125C	2.0 †	70				100	1.6k*§	125C	15 Ø	TO83
13#	CR70C12	600	70	83C		100m	3.0	15m	125J	1.8	220 §				100 △	1.5k△	125J	5.0 Ø	S332
14#	CR70CX12	600	70	83C		100m	3.0	15m	125J	1.8 †	220			30 §	100 §	1.5k	125J	5.0 Ø	S237f
15#	CR70CY12	600	70	83C		100m	3.0	15m	125J	1.8 †	220			15 §	100 §	1.5k	125J	5.0 Ø	S237f
16#	BTX50-600R	600 §	70	85C	150m	80m	3.0	20m	125J	2.5	500	5.0u	50	50u		1.5k	125J	1.0 †	TO94
17#	BTY99/600R	600	70	85B	10mØ§	70m	3.0	12m	125J	2.5	500	3.0u	50	20u	10	900	125J	5.0	TO49
18▼#	SKT70-06AU	600	70	85C	150m	150m	3.0			1.8	60			25u☑	50 §Ø	1.7k	130A	500m	S260c
19▼#	SKT70-06BT	600	70	85C	150m	150m	3.0			1.8	60			20u☑	50 §	1.7k	130A	500m	S260c
20▼#	SKT70-06BU	600	70	85C	150m	150m	3.0			1.8	60			25u☑	50 §	1.7k	130A	500m	S260c
21▼#	SKT70-06CT	600	70	85C	150m	150m	3.0			1.8	60			20u☑	200 §	1.7k	130A	500m	S260c
22▼#	SKT70-06CU	600	70	85C	150m	150m	3.0			1.8	60			25u☑	200 §	1.7k	130A	500m	S260c
23▼#	SKT70-06DT	600	70	85C	150m	150m	3.0			1.8	60			20u☑	500 §	1.7k	130A	500m	S260c
24▼#	SKT70-06DU	600	70	85C	150m	150m	3.0			1.8	60			25u☑	500 §	1.7k	130A	500m	S260c
25▼#	SKT70-06EU	600	70	85C	150m	150m	3.0			1.8	60			25u☑	1.0k§	1.7k	130A	500m	S260c
26#	TK160FA	600	70	85C		300m	3.0	10m	125J	2.0	200	3.0u§	100	20u§	100 §	1.0k		900m	S317
27#	TK160FB	600	70	85C		300m	3.0	10m	125J	2.0	200	3.0u§	100	40u§	100 §	1.0k		900m	S317
28▼#	SKT71-06A	600	70	105C	150m	150m	3.0			1.8	60			70u	50 §Ø	1.7k	150A	500m	S260c
29▼#	SKT71-06B	600	70	105C	150m	150m	3.0			1.8	60			70u	50 §	1.7k	150A	500m	S260c
30▼#	SKT71-06C	600	70	105C	150m	150m	3.0			1.8	60			70u	200 §	1.7k	150A	500m	S260c
31▼#	SKT71-06D	600	70	105C	150m	150m	3.0			1.8	60			70u	500 §	1.7k	150A	500m	S260c
32▼#	SKT71-06E	600	70	105C	150m	150m	3.0			1.8	60			70u	1.0k§	1.7k	150A	500m	S260c
33▼#	10TCA60	600	70	125	100	100m	3.0							100u	100 §	1.5k	125	10	
34	70C60	600	70	125J	200m§	200m	3.0	10m	125J	1.8	220	10u	70	40u§		1.6k	125J	15 Ø	TO94#△
35	70C60F	600	70	125J	200m§	200m	3.0	10m	125J	1.8	220	10u	70	40u§		1.6k	125J	15 Ø	TO83#△
36#	BTX37/600R	600	75		10mØ	80m	3.0			3.3	500	3.0u	50	20u		680	125J	.50	TO49
37#	SF50J11	600	79	85C	150m	100m	3.0	8.0m	125	1.7 §	150	6.0u	50		15	1.0k	125J	5.0	S189f
38#	SH50J11	600	79	85C	150m	100m	3.0	8.0m	125J	1.7 §	150	6.0u	50	20u§	100	1.0k	125J	.50 †	S189f
39▼#	12TC60	600	80		100m	100m	3.0			1.5		10u		150u	50 §	1.5k*	125J		S183b
40#	2SF551	600 ☑	80	50B		100m	3.5	10m	125J	2.3	500					1.0k	125J	5.0	S189d
41#	CR31-703A	600	80	55C	38mØ	60m	3.0	10m†	125C	1.7	100	3.7u	100	130u	20	700	135J	5.0 Ø	TO49
42#	CR31-704AA	600	80	55C	38mØ	60m	3.0	10m†	125C	1.7	100	5.7u	100	20u☑	20	700	135J	5.0 Ø	TO49
43#	CR31-704BA	600	80	55C	38mØ	60m	3.0	10m†	125C	1.7	100	5.7	100	15u☑	20	700	135J	5.0 Ø	TO49
44#	CR31-704CA	600	80	55C	38mØ	60m	3.0	10m†	125C	1.7	100	5.7	100	12u☑	20	700	135J	5.0 Ø	TO49
45#	CR31-704DA	600	80	55C	38mØ	60m	3.0	10m†	125C	1.7	100	5.7u	100	8.0u☑	20	700	135J	5.0 Ø	TO49
46	36RA60	600 ☑	80 △	75C	500m	150m	2.5	15m	125C	2.2 †	160				200 §	1.0k△	125J	2.0 †	TO94
47	36RC60A	600 ☑	80 △	75C	20 Ø	700m	2.5	3.0mØ	125C	2.2 †	160					850 △	125J	2.0 †	TO94
48	36RCF60A	600 ☑	80 △	75C	20 Ø	700m	2.5	3.0m	125C	2.2 †	160		50	20 §		850 △	125J	2.0 †	TO94
49	36RE60	600 ☑	80 △	75C	500m	150m	2.5	5.0m	125C	2.2 †	160				10 §	1.0k△	125J	2.0 †	TO94
50	37RA60	600 ☑	80 △	75C	500m	150m	2.5	15m	125C	2.2 †	160				200 §	1.0k△	125J	2.0 †	TO83
51	37RC60A	600 ☑	80 △	75C	20 Ø	700m	2.5	3.0mØ	125C	2.2 †	160					850 △	125J	2.0 †	TO83
52	37RCF60A	600 ☑	80 △	75C	20 Ø	700m	2.5	3.0m	125C	2.2 †	160			20 §		850 △	125J	2.0 †	TO83
53	37RE60	600 ☑	80 △	75C	500m	150m	2.5	5.0m	125C	2.2 †	160				10 §	1.0k△	125J	2.0 †	TO83
54	51RCG60	600 ☑	80 △	75C	100m	150m	2.5	15mØ	125C	2.5 †	160			20u	100 §	1.2k△	125J	3.0 †	TO94
55	52RCG60	600 ☑	80 △	75C	100m	150m	2.5	15mØ	125C	2.5 †	160			20u	100 §	1.2k△	125J	3.0 †	TO83
56#	CR80-06	600	80	75C	60m	100m	3.0	7.0m	100J	1.7	250	4.5u	80	30u		800	100	5.0	S284
57#	2SF786	600	80	78B		100m	3.5	10m	125J	2.3	500		50	30u	20	1.0k	125	.50	S189d
58#	2SF786A	600	80	78B		100m	3.5	10m	125J	2.3	500		50	15u	20	1.0k	125	50	S189d
59#	51RC60	600	80 △	84B	50m	70m	2.5	2.5		2.2	50	4.5u	50	60u	20	700	125A	5.0 Ø	S237c
60	36REH60	600 ☑	80 △	100C	500m	150m	2.5	15m	150C	2.1 †	160				10 §	900 △	150J	2.0 †	TO94
61	37REH60	600 ☑	80 △	100C	500m	150m	2.5	15m	150C	2.1 †	160				10 §	900 △	150J	2.0 †	TO83
62▼#	12TCA60	600	80	125	100	100m	3.0							100u	100 §	1.5k	125	10	
63	250M	600	80	125J		100m	3.0	10m	125J	1.3	50	4.0u	50	100u	300	1.6k*	125J	3 †	Z59
64#	CS42-06	600	82	35	200m	110m	2.0	10m	115	1.9	180			180u	200	900	115	4.0	
65#	37TB6	600	85	66B		15	3.0	15m		1.9	175					930	125	1.0	S63d
66#	CR70-701A	600 †	85	75C		100m	3.0	15m	25C	1.7	70				20	1.0k	125C	1.0	TO49
67#	CR70-701C	600	85	75C		100m	3.0	30m†	125C	1.7	210				20	1.0k	125	5.0	M376
68▼#	T70N600	600	85	85C	200m	150m	5.0m	25m	125J	2.8	400	4.5u	30	50u	50	2.0k§	125J		
69#	CS80-06	600	90	75	50m	80m	3.0	15m	125	1.5	200			70	1.0k	1.2k	45	10	
70▼#	SKT90-06AU	600	90	85C	150m	150m	3.0			1.6	110			25u☑	50 §Ø	2.2k	130A	500m	S260c
71▼#	SKT90-06BU	600	90	85C	150m	150m	3.0			1.6	110			25u☑	50 §	2.2k	130A	500m	S260c
72▼#	SKT90-06CU	600	90	85C	150m	150m	3.0			1.6	110			25u☑	200 §	2.2k	130A	500m	S260c
73▼#	SKT90-06DU	600	90	85C	150m	150m	3.0			1.6	110			25u☑	500 §	2.2k	130A	500m	S260c
74▼#	SKT90-06EU	600	90	85C	150m	150m	3.0			1.6	110			25u☑	1.0k§	2.2k	130A	500m	S260c
75▼#	SKT91-06A	600	90	105C	150m	150m	3.0			1.6	110			70u	50 §Ø	2.2k	150A	500m	S260c
76▼#	SKT91-06B	600	90	105C	150m	150m	3.0			1.6	110			70u	50 §	2.2k	150A	500m	S260c
77▼#	SKT91-06C	600	90	105C	150m	150m	3.0			1.6	110			70u	200 §	2.2k	150A	500m	S260c
78▼#	SKT91-06D	600	90	105C	150m	150m	3.0			1.6	110			70u	500 §	2.2k	150A	500m	S260c
79▼#	SKT91-06E	600	90	105C	150m	150m	3.0			1.6	110			70u	1.0k§	2.2k	150A	500m	S260c
80#	BTX51-600R	600	95	85B	10m§Ø	70m	3.0	13m	125J	2.1	500	3.0u	50	20u	10	900	125J	5.0	TO49
81#	TT6FA	600	95	85C		500m	3.0	25m	125J	2.0	350	3.0u§	100	20u§	100 §	2.0k		1.5	S204a
82#	TT6FB	600	95	85C		500m	3.0	25m	125J	2.0	350	3.0u§	100	40u§	100 §	2.0k		1.5	S204a
83#	CR100-06	600	100	50	20	2.0	10		125	1.7	350	45u	100	25u	20	1.0k	125	5.0	S267c
84#	38TB6	600	100	62B		15	3.0	15m		1.8	205					1.0k	125	1.0	S63d
85	100C60	600	100	125J	200m	200m	2.5	25m	125J	2.0	500	10u	100	40u§		2.0k	125J	10 Ø	TO93#△
86	100C60B	600	100	125J	200m	200m	2.5	25m	125J	2.0	500	10u	100	40u§	100	2.0k	125J	10 Ø	TO93#△
87#	CR51-703A	600	105	55C	38mØ	60m	3.0	10m†	125C	1.6	150	3.4u	120	185u	20	760	135J	5.0	TO49
88	C154M	600	110 △		500m	500m	4.0	11m	25C	3.0 †	500 †		50	7.0u§	200 §	1.2k	125J	2.0 Ø	TO94
89	C155M	600	110 △		500m	500m	4.0	11m	25C	3.0 †	500 †		50	12u§	100 §	1.2k	125J	2.0 Ø	TO94
90	C156M	600	110 △		500m	500m	4.0	11m	25C	3.0 †	500 †		50	7.0u§	200 §	1.2k	125J	2.0 Ø	S315
91	C157M	600	110 △		500m	500m	4.0	11m	25C	3.0 †	500 †		50	12u§	100 §	1.2k	125J	2.0 Ø	S315
92#	BStH0440	600	110	46C	180m	100m	2.0	10m	110J					20u§	50 §	1.0k	110J		S189e
93#	BStH0540	600	110	52C	200m	200m	2.0	10m	120J					250u§	50 §	900	120J		S189e
94♦	JAN2N1800	600	110	60C	40m	70m	3.0	15m	125A	1.8	150	15u	50	40u		1.0k	125A	500m	TO83
95♦	JAN2N1806	600	110	60C	40m	70m	3.0	15m	125A	1.8	150	15u	50	40u		1.0k	125A	500m	TO49
96	JAN2N3091	600	110	60B	40m	70m	3.0			1.4	50		50	40u☑	20 §	1.0k	125B	500m	TO94
97	JAN2N3099	600	110	60B	40m	70m	3.0			1.4	50		50	40u☑	20 §	1.0k	125B	500m	TO94
98	72RE60	600 §	110	60C	15mØ	70m	2.0	2.5mØ	125J	1.8	220					1.0k△	125J	5.0 Ø	TO83
99	72RE60A	600 §#	110	60C	15mØ	70m	2.0	2.5mØ	125J	1.8	220					1.0k△	125J	5.0 Ø	TO83
100	2541M	600	110	60C		200m	3.0	10m	125J	1.7 §	50	3.5u	50	15u	100	1.4k*	125J	3.0 †	Z59
101	2542M	600	110	60C		200m	3.0	10m	125J	1.7 §	50	8.0u	50	20u	100	1.4k*	125J	3.0 †	Z59
102	C50M	600	110 △	60B	100m	75m	3.0	6.0m△	125J	2.5	500	5.0u	50	30u§	15 §	1.0k	125	500m	TO94
103	C52M	600	110 △	60B	100m	75m	3.0	6.0m△	125J	2.5	500	5.0u	50	30u§	20 §	1.0k	125	500m	S315
104	C55E☑	600	110	60C	100m	70m	2.5	4.0m	125J	2.5 †	500	5.0u	5.0	15u§	100 §	1.2k	125J	.50 †	TO49
105	C55M△	600	110 △	60C	100m	75m	3.0	10m	125J	2.5	500	5.0u	50	30u§	20 §	1.0k	125J	5.0	S91
106	C56E☑	600	110	60C	100m	70m	2.5	4.0m	125J	2.5 †	500	5.0u	5.0	15u§	100 §	1.2k	125J	.50 †	TO83
107	C56M△	600	110 △	60C	100m	75m	3.0	10m	125J	2.5	500	5.0u	50	30u§	20 §	1.0k	125J	5.0	S108
108#	TK160	600	110	60C	100m	125m	3.0	10m		2.0	200	4.5u	50	20u	40 §Ø	1.0k	125C	.50	TO49
109	71RC60A	600 ☑	110 △	62C	20mØ	70m	2.5	3.0mØ	125J	1.9 †	220		50	30u§		1.0k△	125J	.5 †	TO94
110	71RCF60A	600 ☑	110 △	62C	20mØ	70m	2.5	3.0mØ	125J	1.9 †	220		50	20u§	25 △	1.0k△	125J	.50 †	TO94

SYMBOLS AND CODES EXPLAINED IN INTERPRETER

6. SILICON CONTROLLED RECTIFIERS

IN ORDER OF (1) PEAK REV. VOLT., (2) MAX. CONT. CUR., (3) TEMPERATURE, (4) TYPE No.

LINE No	4 TYPE No	1 PRV and VBO (V)	MAX. CONT. CURRENT 2 Idc (A)	3 at TEMP (°C)	MAX. HOLD. CUR Ih @ 25°C (A)	MAX GATE FIRING SPEC at 25°C Igf (A)	Vgf (V)	MAX SAT I Ir@PRV and Is@VBO (A)	at TEMP (°C)	MAX. FWD. VOLT. DROP at 25°C Vf (V)	@ If (A)	SWITCHING TIME at 25°C Ton (s)	for If (A)	Toff (s)	MIN. dV/dt @ 25°C (V/us)	ABS. MAX. RATINGS 1Cy PK SURGE I@25°C (A)	MAX TEMP (°C)	MAX GATE POWER (W)	DWG. No.
1	72RC60A	600 ☑	110 △	62C	20mØ	70m	2 5	3.0mØ	125J	1.9 †	220		50	30u§		1 0k△	125J	5 †	T083
2	72RCF60A	600 ☑	110 △	62C	20mØ	70m	2.5	3 0mØ	125J	1 9 †	220		50	20u§	25 △	1 0k△	125J	50 †	T083
3	71RB60	600 ☑	110 △	65C	500m	150m	2.5	15m	125J	2 5 †	220	2.0u	50	30u§	200 △	1 2k△	125J	2 †	T094
4	71REB60	600 ☑	110 △	65C	500m	150m	2 5	5 0m	125J	2.5 †	220	2 0u	50	30u§	200 △	1 2k△	125J	2 †	T094
5	72RB60	600 ☑	110 △	65C	500m	150m	2 5	15m	125J	2 5 †	220	2.0u	50	30u§	200 △	1 2k△	125J	2 †	T083
6	72REB60	600 ☑	110 △	65C	500m	150m	2 5	5 0m	125J	2 5 †	220	2.0u	50	30u§	200 △	1 2k△	125J	2 †	T083
7	C150M△	600	110 △	70C	500m	150m	3.0	20m	120C	2 6	500	8 0u	50	100u§	200	1 5k	125J	10	T094
8	C151M△	600	110 △	70C	500m	150m	3.0	20m	120C	3.5	500	8 0u	50	50u§	200	1 0k	125J	10	S91
9	C152M△	600	110 △	70C	500m	150m	3.0	20m	120C	2.6	500	8 0u	50	100u§	200	1.5k	125J	10	S315
10	C153M△	600	110 △	70C	500m	150m	3 0	20m	120C	3.5	500	8 0u	50	50u§	200	1.0k	125J	10	S108
11	71RCG60	600 ☑	110 △	75C	100m	150m	2 5	15mØ	125C	2 4 †	220			15u	100 §	1 4k△	125J	3 0 †	T094
12	72RCG60	600 ☑	110 △	75C	100m	150m	2 5	15mØ	125C	2.4 †	220			15u	100 §	1 4k△	125J	3.0 †	T083
13#	71RC60	600	110 △	79B	50m	70m	2.5	2.5m		1 9	70	4 5u	50	70u	20	1 0k	125A	5 0 Ø	S237c
14	71RA60	600 ☑	110 △	80C	500m	150m	2.5	15m	125J	1 9 †	220	2 0u	50	50u§	200 △	1 6k△	125J	2 †	T094
15	71REA60	600 ☑	110 △	80C	500m	150m	2.5	5 0m	125J	1 9 †	220	2.0u	50	50u§	200 △	1 6k△	125J	2 †	T094
16	72RA60	600 ☑	110 △	80C	500m	150m	2 5	15m	125J	1.9 †	220	2.0u	50	50u§	200 △	1 6k△	125J	2 †	T083
17	72REA60	600 ☑	110 △	80C	500m	150m	2 5	5.0m	125J	1 9 †	220	2.0u	50	50u§	200 △	1 6k△	125J	2 †	T083
18	C151E☑	600	110	80C	500m	150m	2 5	8.0m	125J	2.6 †	500	8.0u	50	30u§	200 §	1.4k	125J	2.0 †	T049
19	C153E☑	600	110	80C	500m	150m	2 5	8 0m	125J	2.6 †	500	8 0u	50	30u§	200 §	1 4k	125J	2 0 †	T083
20	NLE151M	600	110	80C	50	.15	2 5	8 0m	125J	2 6	500	8 0u	50	50u	200	1.4k	125J	2.0 †	T094
21	NLE153M	600	110	80C	50	15	2 5	8.0m	125J	2 6	500	8 0u	50	50u	200	1.4k	125J	2.0 †	T083
22	NLF151M	600	110	80C	500m	150m	2 5	8 0m	125J	2.6 †	500	8.0u	50	50u☑	200	1.4k	125J	2.0 †	T094
23	NLF153M	600	110	80C	500m	150m	2 5	8 0m	125J	2 6 †	500	8 0u	50	50u☑	200	1.4k	125J	2.0 †	T083
24	C154E☑	600	110	83C	500m	200m	2 5	8.0m	125J	3.0 †	500	5.0u	50	7.0u§	200 §	1.4k	125J	2.0 †	T094
25	C155E☑	600	110	83C	500m	200m	2.5	8.0m	125J	3 0 †	500	5 0u	50	12u§	200 §	1 4k	125J	2.0 †	T094
26	C156E☑	600	110	83C	500m	200m	2.5	8.0m	125J	3.0 †	500	5.0u	50	7.0u§	200 §	1.4k	125J	2.0 †	T083
27	C157E☑	600	110	83C	500m	200m	2 5	8.0m	125J	3 0 †	500	5 0u	50	12u§	200 §	1.4k	125J	2.0 †	T083
28	NLF158M	600	110	83C	500m	150m	2.5	8.0m	125J	3.0 †	500	5.0u	50	40u§	200	1.4k	125J	2 0 †	T094
29	NLF159M	600	110	83C	500m	150m	2 5	8 0m	125J	3 0 †	500	5 0u	50	40u☑	200	1.4k	125J	2.0 †	T083
30	71RC60B	600 ☑	110 △	85C	20mØ	70m	2 5	4.0mØ	150J	2 2 †	220		50	40u§		1 0k△	150J	.5 †	T094
31	72RC60B	600 ☑	110 △	85C	20mØ	70m	2 5	4.0mØ	150J	2.2 †	220		50	40u§		1 0k△	150J	5 †	T083
32▼#	SKT110-06AV	600	110	85C	200m	200m	3 0			1 6	70			30u☑	50 §Ø	2.8k	130A	1.0	S260d
33▼#	SKT110-06BT	600	110	85C	200m	200m	3.0			1.6	70			20u☑	50 §	2.8k	130A	1.0	S260d
34▼#	SKT110-06BV	600	110	85C	200m	200m	3 0			1.6	70			30u☑	50 §	2.8k	130A	1.0	S260d
35▼#	SKT110-06CT	600	110	85C	200m	200m	3 0			1.6	70			20u☑	200 §	2 8k	130A	1.0	S260d
36▼#	SKT110-06CV	600	110	85C	200m	200m	3 0			1 6	70			30u☑	200 §	2.8k	130A	1.0	S260d
37▼#	SKT110-06DT	600	110	85C	200m	200m	3 0			1.6	70			20u☑	500 §	2 8k	130A	1 0	S260d
38▼#	SKT110-06DV	600	110	85C	200m	200m	3 0			1.6	70			30u☑	500 §	2 8k	130A	1 0	S260d
39▼#	SKT110-06EV	600	110	85C	200m	200m	3.0			1.6	70			30u☑	1.0k§	2.8k	130A	1.0	S260d
40	C152E☑	600	110	89C	500m	150m	2 5	10m	125J	2 6 †	500	8.0u	50	100u§	200 §	1 8k	125J	2 0 †	T083
41	NLE150M	600	110	89C	.50	15	2 5	4 0m	125J	2.6	500	8.0u	50	150u	200	1 6k	125J	2 0 †	T094
42	NLE152M	600	110	89C	.50	15	2.5	4 0m	125J	2 6	500	8.0u	50	150u	200	1 6k	125J	2.0 †	T083
43	NLF150E	600	110	89C	500m	150m	2.5	10m	125J	2.6 †	500	8.0u	50	100u§	200 §	1 6k	125J	2.0 †	T094
44	NLF152E	600	110	89C	500m	150m	2 5	10m	125J	2.6 †	500	8 0u	50	100u§	200 §	1.6k	125J	2.0 †	T083
45	NLH150M	600	110	89C	.50	15	2.5	4.0m	125J	2.6	500	8 0u	50	150u	200	1.6k	125J	2.0 †	T094
46	NLH152M	600	110	89C	50	15	2 5	4 0m	125J	2.6	500	8 0u	50	150u	200	1.6k	125J	2.0 †	T083
47	71REJ60	600 ☑	110 △	90C	500m	150m	2 5	15m	150J	2.5 †	220	2.0u	50	50u§	50 △	1.0k△	150J	2 †	T094
48	72REJ60	600 ☑	110 △	90C	500m	150m	2.5	15m	150J	2.5 †	220	2.0u	50	50u§	50 △	1.0k△	150J	2 †	T083
49	NLC150M	600	110	90C	.50	.15	2.5	10m	125J	2.6	500	8.0u	50	100u	200	1.8k	125J	2 0 †	T049
50	NLC152M	600	110	90C	50	.15	2.5	10m	125J	2.6	500	8.0u	50	100u	200	1 8k	125J	2.0 †	T083
51	NLC350M	600	110	90C	50	.15	2.5	8.0m	125J	2.6	500	8 0u	5 0	100u	200	1.8k	125J	2.0 †	M456
52	71REH60	600 ☑	110 △	105C	500m	150m	2 5	15m	150J	1 9 †	220	2 0u	50	60u§	50 △	1.4k△	150J	2 †	T094
53	72REH60	600 ☑	110 △	105C	500m	150m	2 5	15m	150J	1 9 †	220	2.0u	50	60u§	50 △	1.4k△	150J	2 †	T083
54▼#	SKT111-06A	600	110	105C	200m	200m	3 0			1.6	70			80u	50 §Ø	2.8k	150A	1.0	S260d
55▼#	SKT111-06B	600	110	105C	200m	200m	3 0			1.6	70			80u	50 §	2.8k	150A	1.0	S260d
56▼#	SKT111-06C	600	110	105C	200m	200m	3.0			1.6	70			80u	200 §	2.8k	150A	1.0	S260d
57▼#	SKT111-06D	600	110	105C	200m	200m	3 0			1.6	70			80u	500 §	2 8k	150A	1.0	S260d
58▼#	SKT111-06E	600	110	105C	200m	200m	3 0			1.6	70			80u	1.0k§	2.8k	150A	1.0	S260d
59	10TC60	600	110	125J	20m	100m	4.0			1.5	110	4 0u	110	25u		1.1k	125J	20	S185
60	C158M	600	110 △	125J	500m	150m	3 0	15m	125C	3.5 †	500				200 §	1.2k△	125J	2.0 Ø	T094
61	C159M	600	110 △	125J	500m	150m	3 0	15m	125C	3.5 †	500				200 §	1.2k△	125J	2.0 †	S315
62#	T95F600	600	115	85C	300m	100m	3 0	30m	125J	1.8	300	2.5u☑	50	30u§	50 §	2.0k§	125J		M330a%
63#	2SF348	600	120	25C		100m	3 0	6.0m	125C	1.2 △	60					1.0k	125	10 Ø	S142
64#	CR120-06	600	120	75C	60m	100m	3 0	7.0m	125J	2.1	370	4 5u	120	40u		1 0k	125	5.0	S284
65#	CR100-701C	600 △	124	80C		100m	3.0	15m	25C	1 7	100				20	1.2k	125C	1.0	M376
66#	CR100-701D	600	125	80C	30mØ	100m	3 0	30m†	125C	1.7	300			100	20	1.5k	125	5.0	T049
67	2505M	600	125	95C		.10	3.0	15m	150J	1.3	50				300	1.6k	150J		T083
68#	SF80J11	600	126 △	85C	200m	150m	3 0	15m	125	1.7 §	250	6.0u	80		15	1.6k	125J	5.0	S267b
69#	SH80J11	600	126	85C	200m	150m	3 0	15m	125	1 7 §	250	6 0u	80	20u§	100	1.6k	125J	50 †	S267b
70#	42TB6	600	135	57B		20	3 0	15m		2 2	265					1 4k	125	1 5	M308
71♦#	30TC60	600	140		150m	100m	3.0			1 5					50 §Ø	3 5k*	125J		S348
72▼#	SKT140-06AV	600	140	85C	200m	200m	3 0			1 6	200			30u☑	50 §Ø	3 9k	130A	1.0	S260d
73▼#	SKT140-06BV	600	140	85C	200m	200m	3 0			1 6	200			30u☑	50 §	3 9k	130A	1.0	S260d
74▼#	SKT140-06CV	600	140	85C	200m	200m	3 0			1 6	200			30u☑	200 §	3.9k	130A	1.0	S260d
75▼#	SKT140-06DV	600	140	85C	200m	200m	3.0			1.6	200			30u☑	500 §	3 9k	130A	1.0	S260d
76▼#	SKT140-06EV	600	140	85C	200m	200m	3 0			1 6	200			30u☑	1.0k§	3 9k	130A	1.0	S260d
77▼#	SKT141-06A	600	140	105C	200m	200m	3.0			1 6	200			80u	50 §Ø	3 9k	150A	1.0	S260d
78▼#	SKT141-06B	600	140	105C	200m	200m	3 0			1.6	200			80u	50 §	3.9k	150A	1.0	S260d
79▼#	SKT141-06C	600	140	105C	200m	200m	3 0			1.6	200			80u	200 §	3.9k	150A	1.0	S260d
80▼#	SKT141-06D	600	140	105C	200m	200m	3.0			1.6	200			80u	500 §	3.9k	150A	1.0	S260d
81▼#	SKT141-06E	600	140	105C	200m	200m	3.0			1 6	200			80u	1.0k	3.9k	150A	1.0	S260d
82▼#	20TCA60	600	140	125	150	100m	3 0							100u	100 §	3.0k	125	10	
83▼#	BStL2440	600	150	50C	150m	300m	2.0	10m	110J	1 8	450			25u☑	50 §	2.5k	110	50	
84▼#	BStL2540	600	150	55C	150m	300m	2 0	10m	120J	2.0	450				50 §	2.3k	120	20	
85#	TT6	600	150	60C	300m	500m	3 0	25m	100J	2 2	350	5 0u	15		20 §Ø	2.0k	100C	1.0	S204
86	2N2548	600	150	80C	50m§	150m§	3.0 §	7.5m	80C	1 5	150				4.0	3.5k§	125C	2 0 †	T093
87#	CR150BX12	600	150	81C		300m	3.0	15mØ	125J	1.9	500			30u☑	100 △	4.0k	125J	16 Ø	S237a
88#	CR150BY12	600	150	81C		300m	3 0	15mØ	125J	1.9	500			15u	100 △	4.0k	125J	16 Ø	S237a
89#	FT150BX12	600	150	81C		300m	3.0	15m	125J	1 9	500		150	30u☑	100 △	4 0k△	125J	16 Ø	M567
90#	FT150BY12	600	150	81C		300m	3.0	15m	125J	1.9	500		150	150u☑	100 △	4.0k△	125J	16 Ø	M567
91#	TT260FA	600	150	85C		500m	3.0	25m	125J	2 0	450	3 0u§	100	20u§	100 §	3 2k		1.5	S204a
92#	TT260FB	600	150	85C		500m	3 0	25m	125J	2.0	450	3.0u§	100	40u§	100 §	3.2k		1.5	S204a
93	150C60	600	150	125J	200m	200m	2.5	25m	125J	1 7	500	10u	150	40u§		3.0k	125J	10 Ø	T093#△
94	150C60B	600	150	125J	200m	200m	2 5	25m	125J	1.7	500	10u	150	40u§	100	3 0k	125J	10 Ø	T093#△
95	101RA60	600 ☑	160 △	80C	500m	150m	2.5	20m	125J	2.1 †	314	2 0u	150	35u§	200 △	2 0k△	125J	2 †	T093
96	101RC60	600 ☑	160 △	80C	50mØ	150m	2.5	5.0mØ	125J	1 7 †	314		150	25u§		2 0k△	125J	2 †	T093
97	101RE60	600 ☑	160 △	80C	500m	150m	2 5	8 0m	125J	2.1 †	314	2.0u	150	35u§	4.0 △	2.0k△	125J	2 †	T093
98♦	115PA60	600 ☑	170 △	85C	500m	150m	2 5	15m	125C	2 3 †	340				200 §	1.6k△	125J	2.0 †	Y200b
99▼#	SKT170-06AY	600	170	85C	200m	250m	3.0			1.6	500			45u☑	50 §Ø	6.6k	130A	1.0	S355
100▼#	SKT170-06BV	600	170	85C	200m	250m	3 0			1 6	500			30u☑	50 §	6 6k	130A	1 0	S355
101▼#	SKT170-06BY	600	170	85C	200m	250m	3.0			1.6	500			45u☑	50 §	6.6k	130A	1.0	S355
102▼#	SKT170-06CV	600	170	85C	200m	250m	3.0			1 6	500			30u☑	200 §	6.6k	130A	1.0	S355
103▼#	SKT170-06CY	600	170	85C	200m	250m	3 0			1.6	500			45u☑	200 §	6 6k	130A	1.0	S355
104▼#	SKT170-06DV	600	170	85C	200m	250m	3.0			1 6	500			30u☑	500 §	6 6k	130A	1.0	S355
105▼#	SKT170-06DY	600	170	85C	200m	250m	3 0			1.6	500			45u☑	500 §	6.6k	130A	1.0	S355
106▼#	SKT170-06EY	600	170	85C	200m	250m	3 0			1 6	500			45u☑	1.0k§	6.6k	130A	1.0	S355
107▼#	SKT171-06A	600	170	105C	200m	250m	3 0			1 6	500			100u	50 §Ø	6.6k	150A	1.0	S355
108▼#	SKT171-06B	600	170	105C	200m	250m	3 0			1.6	500			100u	50 §	6.6k	150A	1.0	S355
109▼#	SKT171-06C	600	170	105C	200m	250m	3 0			1 6	500			100u	100 §	6 6k	150A	1 0	S355
110▼#	SKT171-06D	600	170	105C	200m	250m	3 0			1 6	500			100u	500 §	6 6k	150A	1.0	S355

SYMBOLS AND CODES EXPLAINED IN INTERPRETER

6. SILICON CONTROLLED RECTIFIERS

IN ORDER OF (1) PEAK REV. VOLT., (2) MAX. CONT. CUR., (3) TEMPERATURE, (4) TYPE No.

LINE No.	4 TYPE No	1 PRV and VBO (V)	MAX. CONT. CURRENT 2 Idc (A)	3 at TEMP (°C)	MAX. HOLD CUR Ih @ 25°C (A)	MAX. GATE FIRING SPEC at 25°C Igf (A)	Vgf (V)	MAX SAT I Ir@PRV and Is@VBO (A)	at TEMP (°C)	MAX. FWD. VOLT. DROP at 25°C Vf (V)	@ If (A)	SWITCHING TIME at 25°C Ton (s)	for If (A)	Toff (s)	MIN. dV/dt @ 25°C (V/us)	ABS. MAX. RATINGS 1Cy PK SURGE I@25°C (A)	MAX TEMP (°C)	MAX GATE POWER (W)	DWG. No.
1▼#	SKT171-06E	600	170	105C	200m	250m	3 0			1.6	500			100u	1 0k§	6 6k	150A	1 0	S355
2#	43TB6	600	175	62B		.20	3 0	15m		2.2	390					1 9k	125	1.5	M308
3▼#	2SF1146	600	175	75C		300m	3 0	15m	125J	1 7 §	500				100 △	4 0k△	125J	16 ∅	S237e
4#	CR150F12	600	175	75C		300m	3 0	15m	125J	1 7 §	500				100 §	4.0k	125J	16 ∅	S237e
5#	FT150B12	600	175	75C		300m	3 0	15m	125J	1 7	500 §				100 △	4 0k△	125J	16 ∅	M567
6	2N3890	600	175	80	200m	400m	4 0	15m	125	1.8	175					4.5k	125	3.0	TO93
7	C350M	600	175	80C	500m	150m	3 0	10m	25	2.6	500	8 0u	50	100u	200	1 5k	120C	2.0	M514
8	2201M	600	175	125J		300m	4 0	15m	125J	1 3 §	100	4.0u	100	30u	100	4 0k*	125J	3.0 †	TO93
9	2202M	600	175	125J		300m	4 0	15m	125J	1.3 §	100	8.0u	100	40u	100	4 0k*	125J	3.0 †	TO93
10▼#	T161N600	600	180	85C	300m	200m	2 0	50m	125J	1 8	500	4.0u	100	50u	50	5 2k§	125J		M330d
11	C358M	600	180 △	125J	500m	150m	3 0	15m	125C	3 5	500	2.0u	50	30u∅	200	1 2k	125J	2.0	M514
12▼#	BStL0240	600	190	40A	180m$	300m$	2 0	10m	115J	1 3 $	250	5 0u	120	150u	200	2 8k	115J	2 0	S251#
13#	46TB6	600	195	56B		20	3 0	15m		2.0	390					2 1k	125	1.5	M308
14#	2SF556	600 ∅	200	62B		125m	2 5	15m	125J	2 1	1 0k					3 5k	125J	10	S167
15#	2SF796	600	200	62B		125m	3 0	15m	125J	2 1	1 0k		100	40u	20	3 5k	125J	1.0	S167
16#	2SF796A	600	200	62B		125m	3 0	15m	125J	2.1	1 0k		100	20u	20	3.5k	125J	1.0	S167
17	C178E	600	200	64C	500m	300m	2 5	12m	125J	3 5 †	1 5k	8 0u	100	150u§	200 §	2.5k	125J	2.0 †	TO93
18	261M	600	200	80		15	3 0	15m	125J	1 4	100				300	3.3k	125		TO93
19	2181M	600	200	80C		300m	4 0	15m	125J	1.3 §	100	4 0u	100	20u	100	3 3k*	125J	3 †	TO93
20	2182M	600	200	80C		300m	4 0	15m	125J	1 3 §	100	8 0u	100	30u	100	3 3k*	125J	3 †	TO93
21	263M	600	200	85		15	3 0	15m	125J	1 3	50				300	1 6k	125		M414
22▼#	T171F600	600	200	85C	300m	200m	2 0	50m	125J	1 8	500	7.5u	100	20u∅	50	5 8k§	125J		M330d
23#	TT360	600	200	85C	40m∅	500m	3 0	25m	125J	1 6	600	5 0u§		100u§	100 ∅§	4 0k		1 5	S204a
24#	V2051K	600	200	90		125m	5 0	20m	125J	1 8	1 0k		200	25	100	4 0k	125J	10	M414b
25	2615M	600	200	105		15	3 0	15m	150J	1 4	100				200	3 3k	150		TO93
26▼#	30TCA60	600	200	125	150	100m	3 0								100 §	5.5k	125	10	
27#	CR155-704NA	600	210	70C	35m∅	150m	3 5	30m†	125C	1 8	450			35u∅	100	2 1k	125	5.0 ∅	M201
28#	47TB6	600	220	50B		20	3 0	15m		1 9	440					2 4k	125	1.5	M308
29#	CR153-703A	600	220	70C	35m∅	150m	3 5	30m†	125C	1 6	450				100	3 0k	125	5 0 ∅	M201
30▼#	SKT220-06AY	600	220	85C	200m	250m	3 0			1 6	800			45u∅	50 §∅	7 8k	130A	1.0	S355
31▼#	SKT220-06BY	600	220	85C	200m	250m	3 0			1.6	800			45u∅	50 §	7 8k	130A	1.0	S355
32▼#	SKT220-06CY	600	220	85C	200m	250m	3 0			1 6	800			45u∅	200 §	7.8k	130A	1.0	S355
33▼#	SKT220-06DY	600	220	85C	200m	250m	3 0			1 6	800			45u∅	500 §	7 8k	130A	1.0	S355
34▼#	SKT220-06EY	600	220	85C	200m	250m	3 0			1 6	800			45u∅	1 0k§	7 8k	130A	1.0	S355
35▼#	SKT221-06A	600	220	105C	200m	250m	3 0			1 6	800			100u	50 §∅	7 8k	150A	1.0	S355
36▼#	SKT221-06B	600	220	105C	200m	250m	3 0			1 6	800			100u	50 §	7 8k	150A	1.0	S355
37▼#	SKT221-06C	600	220	105C	200m	250m	3 0			1 6	800			100u	200 §	7.8k	150A	1.0	S355
38▼#	SKT221-06D	600	220	105C	200m	250m	3 0			1 6	800			100u	500 §	7 8k	150A	1 0	S355
39▼#	SKT221-06E	600	220	105C	200m	250m	3 0			1 6	800			100u	1 0k§	7 8k	150A	1.0	S355
40#	20TC60	600	220	125	50m	100m	3 0			1 5	200	5 0u	200	30u		2.5k	125J	20	S183
41#	CR152-703A	600	230	70C	35m∅	150m	3 5	30m†	125C	1 5	450				100	3 1k	125	5.0	M201
42#	2SF826	600	230	85B		100m	2 5	15m	125J	1 8	1 0k					4 0k	125J	10	S167
43	NLF185M	600	235 △		500m	150m	2 5		125J	2 8	1 5k	8 0u	100	15u	200	3 5k	125J	2 0 †	TO93
44	151RC60	600 ∅	235 △	62C	50m∅	100m	2 5	5 0m∅	125J	1 7 †	471		150	25u§		3 0k△	125J	2 †	TO93
45	C181E	600	235	65C	500m	300m	2 5	12m	125J	3 5 †	1 5k	8 0u	100	30u§	200 §	2 5k	125J	2 0 †	TO93
46	151RB60	600 ∅	235 △	75C	500m	150m	2 5	20m	125J	2.2 †	471	2 0u	150	40u§	200 △	2 5k△	125J	2 †	TO93
47	151REB60	600 ∅	235 △	75C	500m	150m	2 5	8 0m	125J	2 2 †	471	2 0u	150	40u§	200 △	2 5k△	125J	2 †	TO93
48#	SF150J11	600	235	76S	200m	150m	3 0	20m	125J	1 5	500					3 2k	125	16	S91b
49#	SH150J11	600	235	76C	200m	150m	3 0	20m	125	1 5	500	6 0u	150	30u§	50	3 2k	125	3 0 †	S91b
50	151RC60A	600 ∅	235 △	80C	50m∅	100m	2 5	5 0m∅	125J	1 4 †	471		150	40u§		3 5k△	125J	2 †	TO93
51	151RCF60A	600	235 △	80C	50m∅	100m	2 5	5 0m∅	125J	1 4 †	471	7 0m	50	30u§	10 △	3 5k△	125J	2.0 †	TO93
52▼	151RF60	600 ∅	235	80C	200m	200m	2 5	15m	125C	1 9 †	471		250	20u§	200 §	4 2k△	125J	3.0 †	TO93
53	C180E∅	600	235	80C	500m	150m	2 5	6 0m	125J	2 9 †	1.5k	8 0u	100	30u§	200 §	3 5k	125J	2.0 †	TO93
54	C180M△	600	235 △	80C	500m	150m	3 0	10m	25	2 9 †	1 5k	8 0u	100	75u	200	3 5k	125C	2 0	TO93
55	C185E∅	600	235	80C	500m	300m	2 5	12m	125J	2 9 †	1.5k	8 0u	100	15u§	200 §	3 5k	125J	2.0 †	TO93
56	NLF180M	600	235 △	80C	500m	150m	2 5	6 0m	125J	2 8	1.5k	8 0u	100	80u	200	3 5k	125J	2 0 †	TO93
57#	TT260	600	235	80C	250m	500m	3 0	25m	125J	1 7	450	5 0u	15	20u	100 §∅	3 2k	125C	1.0	S204
58	151RA60	600 ∅	235 △	85C	500m	150m	2 5	20m	125J	1 8 †	471	2 0u	150	60u§	200 △	3 5k△	125J	2 †	TO93
59	151REA60	600 ∅	235 △	85C	500m	150m	2 5	8.0m	125J	1 8 †	471	2.0u	150	60u§	200 △	3.5k△	125J	2 †	TO93
60#	CR151-703A	600	240	70C	35m∅	150m	3 5	30m†	125C	1 4	450				100	3 3k	125	5.0	M201
61#	CR250GX12	600	250	50C		350m	4 0	15m	125J	1.9	780 §		250	30u∅	100 △	5.0k△	125J	16 ∅	M569
62#	CR250GY12	600	250	50C		350m	4 0	15m	125J	1 9	780 §		250	15u∅	100 △	5 0k△	125J	16 ∅	M569
63#	FT250BX12	600	250	52C		350m	4 0	15m	125J	1 9	780 §		250	30u∅	100	5 0k△	125J	16 ∅	M567
64#	FT250BY12	600	250	52C		350m	4.0	15m	125J	1 9	780 §		250	15u∅	100 △	5.0k△	125J	16 ∅	M567
65#	FT250B12	600	250	55C		350m	4 0	15m	125J	1 8	780 §				100 △	5 0k△	125J	16 ∅	M567
66#	CR250AX12	600	250	61C	30m	350m	4.0	15m	125J	1.9	780 §		250	30u∅	100 △	5 0k△	125J	16 ∅	S158b
67#	CR250AY12	600	250	61C	30m	350m	4.0	15m	125J	1 9	780 §		250	30u∅	100 △	5 0k△	125J	16 ∅	S158b
68#	2SF538	600	250	65C		350m	4.0	15m∅	125J	1 8	780				10 △	5 0k	125J	16 ∅	S158b
69#	CR250F12	600	250	65C		350m	4.0	15m	125J	1 8 §	780				100 §	5 0k	125J	3 0 †	S158e
70	2N3359	600	250	80C	200m§	400m§	4 0 §	15m	125C	2 0 §	250					5 0k§*	125C	3.0 †	TO108
71#	T250F600	600	250	85C	300m	200m	2.0	50m	125J	1 7	500	3 0u	100	30u§	400 §	5 5k§	125J	150	M387
72▼#	TY180NP6K2	600	260	70B	50m	200m	3 5	26m	125J	1 0	600	10u∅	500	20n∅	20 §	4 3k	125J	1 5 †	S375
73▼#	TY180QP6K2	600	260	70B	50m	200m	3 5	26m	125J	1 6	600	10u∅	500	30u∅	20 §	4 3k	125J	1 5 †	S375
74▼#	T221N600	600	260	85C	300m	200m	2 0	50m	125J	1.5	500	4 0u	100	60u	50	6 5k§	125J		M330d
75#	61TB6	600	275	67B		30	3 0	40m		2 4	665					3.2	125	2 0	M308a
76	260M	600	275	80		15	3.0	15m	125J	1 2					300	3 3k	125		TO93
77♦	175PA60	600 ∅	275 △	85C	500m	150m	2.5	20m	125C	2.3 †	550				200 §	3 0k△	125J	2.0 †	Y200b
78	2605M	600	275	105		15	3 0	15m	150J	1 2	100				300	5 0k	125		TO93
79♦#	40TC60	600	300		150m	100m	3 0			1.5					50 §∅	4 5k*	125J		S348
80#	CR300AW12	600	300	11A	30m∅	350m	4 0	15m	125J	1 9 §	780			50 §	100 §	5.0k	125J	16 ∅	S300
81#	CR300AX12	600	300	11A	30m∅	350m	4 0	15m	125J	1 9 §	780			30 §	100 §	5.0k	125J	16 ∅	S300
82#	CR300AY12	600	300	11A	30m∅	350m	4 0	15m	125J	1.9 §	780			15 §	100 §	5.0k	125J	16 ∅	M406
83▼#	2SF925	600	300	15A		350m	4 0	15m	125J	1 8 §	780				100 △	5 0k△	125J	16 ∅	S300
84#	CR300F12	600	300	15A		350m	4 0	15m	125J	1.8 §	780				100 §	5 0k	125J	16 ∅	S300
85	273M	600	300	70		15	3.0	15m	125J	1 3	100				300	3 3k	125		M414
86#	FT300C12	600	300	73C		350m	4.0	30m	150J	1.7	950 §				50 △	5 0k△	150J	16 ∅	M567
87▼#	FT300A12	600	300	81C		200m	3 0	30m	125J	1.6	940 §				200 △	6 0k△	125J	16 ∅	M567a
88▼#	40TCA60	600	300	125	150	100m	3.0								100 §	5 5k	125	10	
89	2231M	600	300	125J		300m	4.0	15m	125J	1.3 §	100	4 0u	100	30u	100	4 5k*	125J	3 0 †	M247
90	2232M	600	300	125J		300m	4 0	15m	125J	1.3 §	100	8.0u	100	40u	100	4 5k*	125J	3.0 †	M247
91	2248M	600	300	125J		300m	4 0	10m	125J	1 0 §	100	5 0u	150	50u	100	5 0k*	125J	3.0 †	M308c
92▼#	BStN0240	600	315	40A	180m$	300m$	2.0	10m	115J	1 4 $	520	5 0u	200	150u	200	6 9k	115J	2 0	S251A#
93#	62TB6	600	315	65B		30	3.0	40m		2 2	665					3 7k	125	2 0	M308a
94#	CR253-703A	600	320	40C	35m∅	150m	3.5	30m†	125C	1 6	450				100	3 5k	125	5.0 ∅	M201
95#	CR252-703A	600	336	50C	35m∅	150m	3.5	30m†	125C	1.5	450				100	3 6k	125	5 0	M201
96▼#	BStN1540	600	350	64C	150m	300m	2.0	15m	125J	1.9	1 0k				200 §	5 1k	125	20	
97#	70TB6	600	355	67B		.30	3.0	40m		2 2	850					4.1	125	2 0	M308a
98▼#	T302N600	600	370	85C	300m	200m	2.0	50m	125J	1.4	500	4.0u	100	80u	50	7 2k§	125J		M330d
99	C380M	600	380	65C	500m	150m	3 0 §	10m	25C	2.8	1 5k	8 0u	100	100u	200	3 5k	120	2.0	M514
100	NLF380M	600	380	67	500m	150m	2.5	10m	25	2.8	1 5k	8 0u	100	100u	200	3 5k	125	2.0	
101	NLF385M	600	380	67	500m	150m	2 5	10m	25	2 8	1 5k	8.0u	100	20u	200	3.5k	125	2.0	
102♦	250PA60	600 ∅	390 △	70C	500m	150m	2 5	20m	125C	2.3 †	780				200 §	4 2k△	125J	2.0 †	Y200b
103	2N3536	600	400	20A	200m§	400m	4 0	15m	125J	1.9	250					5 0k	125J	16	M247
104▼	250RM60	600 ∅	400	60C	500m	150m	2.5	25m	125C	1.7 †	785		500	40u§	200 §	5.5k△	125J	2 0 †	TO118
105▼	251RM60	600 ∅	400	60C	500m	150m	2 5	25m	125J	1.7 †	785		500	40u§	200 §	5 5k△	125J	2.0 †	TO108
106#	71TB6	600	400	65B		.30	3 0	40m		2.0	850					4 6k	125	2 0	M308a
107#	2SF833	600	400	68B		125m	3.0	25m	125J	1.6	1 0k					7.0k	125J	10	S280
108▼	C600M	600	400 △	72	500	150	6.5			1.5	2 2k	4 0		250	100	13k	125	40	
109	250RA60	600 ∅	400 △	75C	100m	150m	3 0	25m	125J	1 7 †	785	5.0u	250	40u§	100 △∅	5.0k△	125J	3 †	TO118
110#	FT500AW12	600	400	75C		350m	4 0	30m	125J	2 2	1.2k§		400	50u∅	200 △	7.0k△	125J	16 ∅	M406

SYMBOLS AND CODES EXPLAINED IN INTERPRETER

6. SILICON CONTROLLED RECTIFIERS

IN ORDER OF (1) PEAK REV. VOLT., (2) MAX. CONT. CUR., (3) TEMPERATURE, (4) TYPE No.

LINE No.	4 TYPE No.	1 PRV and VBO (V)	MAX. CONT. CURRENT 2 Idc (A)	3 at TEMP (°C)	MAX. HOLD. CUR Ih @ 25°C (A)	MAX GATE FIRING SPEC at 25°C Igf (A)	Vgf (V)	MAX SAT I Ir@PRV and Is@VBO (A)	at TEMP (°C)	MAX. FWD. VOLT. DROP at 25°C Vf (V)	@ If (A)	SWITCHING TIME at 25°C Ton (s)	for If (A)	Toff (s)	MIN. dV/dt @ 25°C (V/us)	ABS. MAX. RATINGS 1Cy PK SURGE I@25°C (A)	MAX TEMP (°C)	MAX GATE POWER (W)	DWG. No.
1#	FT500AX12	600	400	75C		350m	4.0	30m	125J	2 2	1 2k§		400	30u☑	200 △	7.0k△	125J	16 ∅	M406
2#	FT500AY12	600	400	75C		350m	4 0	3.0m	125J	2.2	1 2k§		400	15u☑	200 △	7 0k△	125J	16 ∅	M406
3#	2SF806	600	400	80C		125m	3 0	25m	125J	1.4	1 0k		300	60u	20	7 0k	125J	2 †	S280
4#	2SF806A	600	400	80C		125m	3 0	25m	125J	1.4	1 0k		300	30u	20	7.0k	125J	2 †	S280
5#	251RC60	600	400 △	85B	40m	15	2 5	5.0m		1.5	250	6.0u	50	100u	4.0	4 8k	125A	10 ∅	S158d
6#	2SF563	600	400	90B		125m	3 0	25m	125J	1.4	1 0k					7 0k	125	20	S280
7#	73TB6	600	430	64B		30	3 0	40m		2.0	1 0k					5 1k	125	2 0	M308a
8#	CR7K703A45	600	435	65C	55m∅	150m	3.5	50m	125J	1 8	1.0k	3 5u	600	180u	100	6 0k	125J	5.0 ∅	M308b
9#	BStN2340	600	440	33C	180m	300m	2.0	10m	115J					40u§	20 §	4 7k	115J		S301
10#	BStN2540	600	440	41C	180m	300m	2 0	10m	120J					250u§	50 §	5.1k	120J		S301
11▼#	YST302QP6K3	600	450	70B	100m	220m	3 5	30m	125J	1.9	1 0k	4.0u☑	600	60u☑	200 §	7 4k	125J	3.0 †	S371a
12#	CR7K703A4	600	460	65C	55m∅	150m	3 5	50m	125J	1.7	100	3 5u	600	180u	100	6.4k	125J	5.0 ∅	M308b
13	276M	600	470			15	3 0	15m	125J	1 2	100				300	5.5k	125		M247
14	304RA60	600 ☑	470 △	5A	500m	150m	3.0	25m	125C	1 6 †	940					6.0k△	125J	3.0 †	TO109#
15#	74TB6	600	470	63B		300m	3.0	40m		1.8	1 0k					5 6k	125	2.0	M308a
16	6RW71MY	600	470	65C		250m	3.1	10m∅	125J	.65 ∅	300				4.0	5.5k§	125	16	S132
17♦	C290M	600	470	65C	100m	150m	3 5			1 2	500	10u	5.0	250u§	100 §	5.5k	125J	3 0	S132
18♦	C291M△	600	470	65C	100m	150m	3.5			1 2	500	10u	5 0	250u§	100 §	5.5k	125J	3 0	S247a
19#	SF300J11	600	470	65C	300m	260m	3 5	20m	125J	1.6	1.0k	6 0u			15 §	5 0k	125J	3.0	S267a
20#	SH300J11	600	470	65C	300m	260m	3.5	20m	125J	1 6	100	6 0u	300	30u§	50	5 0k	125J	3 0 †	S267a
21	C291M☑	600	470	66C	100m	150m	3 0	15m	125J	1.2 †	500	5.0u	5 0	100u§	100 §	5.5k	125J	3 0 †	M331a
22	NLC295M	600	470	67	100m	150m	3 0	15m	125	1.2	500	5 0u	5 0	20u	100	5.5k	125	3 0	
23	NLC297M	600	470	67	100m	150m	3 0	15m	125	1 2	500	5 0u	5 0	20u	100	5.5k	125	3 0	
24	NLF290M	600	470	67	100m	150m	3 0	15m	125	1.2	500	5 0u	5 0	100u	100	5.5k	125	3 0	
25	NLF295M	600	470	67	100m	150m	3 0	15m	125	1 2	500	5.0u	5.0	20u	100	5.5k	125	3 0	
26	NLF297M	600	470	67	100m	150m	3 0	15m	125	1.2	500	5.0u	5.0	20u	100	5 5k	125	3.0	
27	272M	600	470	71		.15m	3 0	15m	125J	1.2	100				300	5.5k	125		M414
28	300RA60	600 ☑	470 △	75C	100m	150m	3 0	25m	125J	1 4 †	945	5 0u	250	50u§	100 ∅△	5.5k△	125J	3 †	TO118
29	300RB60	600 ☑	470 △	75C	100m	150m	3 0	25m	125J	1 6 †	945	5.0u	250	50u§	25 △	5 5k△	125J	3 †	TO118
30#	301RC60	600	470 △	85B	40m	15	2 5	5.0m		1.4	300	6 0u	50	100u	4.0	5.5k	125A	10 ∅	S158d
31	NLF291M	600	470 △	125J	100m	150m	2 5	15m	125J	1 2	500	5 0u	100	100u§	100 §	5 5k△	125J	2.0 †	M436%
32#	CR7K703A35	600	480	65C	140m	150m	3 5	50m	125J	1 6	1.0k	3 5u	600	180u	100	6.9k	125J	5 0 ∅	M308b
33▼#	YST301QP6K3	600	500	70B	100m	220m	3.5	30m	125J	1 9	1 0k	4 0u☑	600	20u☑	200 §	7.4k	125J	3.0 †	S371a
34#	FT500C12	600	500	77C		350m	4 0	30m	125J	1.7 §	1.5k				200 §	10k	125J	16 ∅	M481
35#	80TB6	600	510	59B		30	3.0	40m		1 5	1.2k					6 4k	125	2 0	M308a
36#	CR7K703A3	600	520	55	140m	150m	3 5			1 6	1.0k	3 5u	600	180u	100 ∅	7.0k	125	5.0	
37▼	NLC501M	600	550	25	250m	150m	6 5 §			1.5	1 0k			200u§	100 §	7 0k	125J	5 0 †	M593
38#	81TB6	600	550	56B		30	3 0	40m		1.7	1 2k					7 0k	125	2 0	M308a
39	350RA60	600	550	65C	100m	150m	3 0	25m	125J	1 4	550	5 0u	50	100u§	100 §∅	6 2k△	125J	3.0	S158a
40▼	C387M	600	550 △	65	500	150	3 0	45	125	4 2	3 0k	2.0		30	200	5 5k	125	40	
41▼	C388M	600	550 △	65	500	150	3 0	45	125	4 2	3 0k	2 0		20	200	5.5k	125	40	
42	270M	600	550	67		15	3.0	15m	125J	1 2	500				300	6.5k	125		S295
43#	84TB6	600	595	58B		.30	3 0	40m		1 6	1.6k					8.6k	125	2 0	M428
44#	CR9K703A25	600	600	65C	55m∅	150m	3 5	50m	125J	1.3	1 0k	3 5u	600	180u	100	900	125J	5.0 ∅	M308b
45#	FT600A12	600	600	72C		350m	4.0	20m	125J	1 6	1 9k§				200 △	10k△	125J	16 ∅	M481
46#	91TB6	600	620	58B		30	3 0	40m		1.4	1 6k					8 6k	125	2.0	M428
47	C507M	600	625 △	125J	100m	150m	4 0	50m	125C	1 4	500	5 0u	25	100u☑	100	6.5k	125J	26	M464
48	C508M	600	625 △	125J	100m	150m	4 0	50m	125C	1 3	500	5 0u	25	60u☑	100	9.0k	125J	26	M464
49▼	420PM60	600 ☑	660	60C	500m	150m	2.5	25m	125C	2.0 †	1 3k		500	40u§	200 §	5 5k△	125J	2 0 †	Y200c
50♦	420PA60S55	600 ☑	660 △	68C	500m	150m	3.0	25m	125J	2 0 †	1 2k			25u☑	100 §	5.5k△	125J	16 ∅	Y200c
51#	CR9K703A2	600	680	65C	55m∅	150m	3 5	50m	125J	1.1	1 0k	3.5u	600	180u	100	11k	125J	5.0 ∅	M308b
52#	2WDCR152-603B	600	700 △	40B	60m∅	150m	3 5	30m	125J	2.1	775				100	3 1k	125J		
53▼	C397M	600	700 △	65	500	150	3 0	45	125	2.9	3.0k	2 0		45	200	7.5k	125	40	
54♦	C398M	600	700 △	65	500	150	3.0	45	125	2.9	3 0k	2 0		30	200	7 5k	125	40	
55♦	470PB60S57	600 ☑	740 △	67C	500m	150m	3 0	25m	125J	1 9 †	1 4k			35u☑	100 §	6 0k△	125J	16 ∅	Y200c
56▼#	FT800C12	600	800	63C		200m	3 0	30m	125J	1.6 §	2.5k				200 △	14k△	125J	16 ∅	M566
57♦	470PA60	600 ☑	850	60C	500m	150m	3.0	25m	125C	1.7 †	1 7k		250	120u§	100 §	8 0k△	125J	3.0 †	Y200c
58	C530M	600	980 △	125J	250m	150m	4 0	25m	125J	1 2	1.1k	4 0u	25	150u☑	100	10k	125J	26	M464
59#	BStP0340	600	1 0k	34C	180m	300m	2 0	20m	110J					40u§	20 §	9.5	110J		M482
60#	BStP0540	600	1 0k	39C	300m	300m	2 0	20m	115J					250u§	50 §	10k	115J		M482
61#	2WDCR7K603B35	600	1 2k△	40B	80m∅	150m	3 5	50m	125J	2.0	1 3k				100	7 5k	125J		
62#	BT106	650	1 0	90C		50m	3 5										100J	500m†	TO64
63	SCR865	650 ☑	16	25C	100m	75m	3 5	6 0m△	100C	3.0	50	3 0u§	10	30u§		150 §	100J	15	TO48
64	SCRF1665	650 ☑	35	25C	100m	40m	3 0	2.0m△	125C	2.0	50	2.0u§	10	12u§		200 §	125J	15	TO48
65#	40T8	650	65	75B	200m	200m	.25	10m†		2 1 †	200					1 1k	125B	1 0	M308
66#	BTX68-600R	660 §	6 4	85B	10m§∅	30m	3 0	2.5m	125J	2.3	20	3 0u	10	20u		80	125J	.5 †	S172
67#	BTX35/600R	660	12	25	10m∅	65m	3.5	5 0m	125	3.0	50	2 0u		15u			125J		TO48
68#	BTX36/600R	660	12	85B	10m∅	40m	3 0	5.0m	125	2 0	50	2 0u	50	15u		136 *	125J	.5 †	TO48
69	C501S	700			250m	150m	6 5	15m	25J	1 5 †	1 0k†		450	200u§	100 §	7 0k	125J	5.0 †	M464
70	C510S	700			500m	200m	5.0	10m	25C	2 2 †	500 §		300	12u§	200	4 0k	125J	2.0 †	M464
71#	TD7001J	700	600m	25A	40m∅	20m	3 0	1 0m	125J	2.0	1 0	1.5u§	500m	15u§	50 ∅§	12		60m	C16e
72#	TD7	700	1 0	25A	20m∅	10m	3 0	1 0m	125J	2 0	1 0	1 5u§	500m	20u§	50 ∅§	15		30m	C16e
73#	TD7001	700	1.0	25C	1 0m∅	2 5m	5 0	1 0m	100J	2.0	.75	1 5u	60	20u		12	100A	01	TO5
74	SCR17A	700 ☑	1 1	25C	20m	15m	2 0	900u△	125C	1 2 △	1 0	1 0u§	30	20u§		60 §	125J	5 0	A130
75	SCRF17A	700 ☑	1 1	25C	50m	15m	2 0	90m△	125C	1 2 △	1 0	2 0u§	1 0	6 0u§		60 §	125J	5.0	A130
76#	BStB0146	700	1 2	45A		15m	3.0		115J						100 §	34	115J		M477
77	SCRFL70	700 ☑	1 7	80C	50m	15m	2.0	.90m	125C	1.2 △	1.0	2 0u§	1 0	12u§		60 §	125C	5.0	A130
78	SCRL70	700 ☑	1 7	80C	20m	15m	2.0	90m△	125C	1 2 △	1 0	1 3u§	1 0	15u§		60 §	125C	5 0	A130
79	JAN2N4203	700	2.0 △	85C	5.0m☑	50m	1.5	4 0m	100C	25 †	30		2.0	15u	250 §	100 §	100J	20 ∅	S17c
80	2N4203	700 △	2 0	90C	3 0m§	100m§	2 0 §	2 0m△	105C	1 5 †	2 0	20u		20u	250	15 *	105A	20 ∅	S17a
81	MCR729-9	700 △	2 0 ∅	105J	15m∅	50m	1 5	2 0m△§	105J	1 5	2 0	.20u	30		50 §	100 *†	105J	20 ∅	S258
82#	TM7004	700	2.5	25A	30m∅	25m	3.0	3 0m	110J	2.0	8.0	2.0u§	1 0	60u§	50 ∅§	50		75m	S141d
83	NCM700C	700	3 0	§	15m∅	30m	1 5	2 0m	100J	1 5	5 0	1 0u☑		10u☑	25 §		100	20 ∅	S17
84	SCR37A	700 ☑	4 0	80C	25m	15m	2 0	1.0m△	125C	2.0 △	3.0	1 0u☑	60			60 §	125J	5 0	S62
85	SCR370	700 ☑	4.0	80C	25m	10m	2 0	1 0m△	125C	2.0 △	3 0	1 3u§	1 0	15u§		60 §	150J	5.0	S62
86	SCRF37A	700 ☑	4 0	80C	50m	15m	2 0	1 0m△	125C	2 0 △	3.0	2 0u§	1 0	6 0u§		60 §	125J	5 0	S62
87#	TM7007	700	4.5	25A	40m∅	40m	3.0	3 0m	110J	2.0	15	2 0u§	6 0	50u§	50 ∅§	80		120m	S141d
88#	BStB0246	700	4 7	63		15m	3 0		115J						100 §	34	115J		M478
89#	BStC0146	700	5 0	80C	100m	40m	2 0	2.0m	125J	1 8	15				50 §	70	125J		S343
90#	BStC0546	700	5 0	80C	100m	40m	2 0	2 0m	125J	1 8	15				50 §	70	125J		TO66
91#	TM7010	700	6.0	25A	40m∅	40m	3 0	3.0m	110J	2.0	20	2 0u§	6 0	50u§	50 ∅§	100		120m	S141d
92#	BTY79-700R	700 §	6 4	85C	20	30m	3 0	2.5m	125	2 3		3 0u	10	20u		80	125	5 0 ∅	TO64
93#	2SF202	700 ☑	6 5	60B		20m	2 1	2.0m	100J	2.3	20					50	100J	50	S105a
94	SCR57A	700 ☑	7.0	60C	25m	20m	2.0	1 0m△	125C	1 9 △	15	1 0u§	100	20u§		100 §	125J	10	S121
95	SCR570	700 ☑	7 0	60C	25m	15m	2 0	1 0m	125C	1 9 △	15	1 0u§	10	15u§		100 §	125J	10	S121
96	SCRF57A	700 ☑	7 0	60C	50m	20m	2 0	1 0m△	125C	1.9 △	15	2 0u§	10	6 0u§		100 §	125J	10	S121
97	SCRF570	700 ☑	7 0	60C	50m	25m	2.0	1.0m	125C	1.9 △	15	2 0u§	10	12u§		100 §	125J	10	S121
98	SCR570A	700 ☑	7 0	110C	25m	15m	2 0	1 0m△	150C	1 9 △	15	1 0u§	10	15u§		100 §	150J	10	S121
99#	5RC70	700	7.4	70B	42m		2 0	1 0m∅	105	1 8 △	50			20u	20	75	105A	50	TO64
100	2N3760	700	7.5	100	200m	200m	2 3	2.5m	120A				10	75u	200	250 *	120A	2 0	TO48
101#	T6F700C	700	8.0	85C	60m	40m	2 0	2 0m	125J	2 5	20	1.0u☑	10	12u§	400 §	75 §	125J		S131j%
102#	T6F700H	700	8 0	85C	60m	40m	2 0	2 0m	125J	2 5	20	1.0u☑	10	12u§	400 §	75 §	125J		M94e%
103#	T6N700C	700	8 0	85C	60m	20m	2 0	2.0m	125J	2 5	20	1.0u☑	10	17u§	50 §	75 §	125J		S131j%
104#	T6N700H	700	8 0	85C	60m	20m	2.0	2 0m	125J	2.5	20	1 0u☑	10	17u§	50 §	75 §	125J		M94e%
105#	T8F700C	700	9.5	85C	60m	40m	2 0	2 0m	125J	2 0	20	1 0u☑	10	12u§	400 §	95 §	125J		S131j%
106#	T8F700H	700	9 5	85C	60m	40m	2 0	2 0m	125J	2 0	20	1 0u☑	10	12u§	400 §	95 §	125J		M94e%
107#	T8N700C	700	9 5	85C	60m	20m	2 0	2 0m	125J	2 0	20	1 0u☑	10	18u§	50 §	95 §	125J		S131j%
108#	T8N700H	700	9.5	85C	60m	20m	2 0	2 0m	125J	2 0	20	1 0u☑	10	18u§	50 §	95 §	125J		M94e%

SYMBOLS AND CODES EXPLAINED IN INTERPRETER

6. SILICON CONTROLLED RECTIFIERS

IN ORDER OF (1) PEAK REV. VOLT., (2) MAX. CONT. CUR., (3) TEMPERATURE, (4) TYPE No.

LINE No.	4 TYPE No.	1 PRV and VBO (V)	MAX. CONT CURRENT 2 Idc (A)	3 at TEMP (°C)	MAX. HOLD. CUR Ih @ 25°C (A)	MAX. GATE FIRING SPEC at 25°C Igf (A)	Vgf (V)	MAX SAT I Ir@PRV and Is@VBO (A)	at TEMP (°C)	MAX. FWD. VOLT. DROP at 25°C Vf (V)	@ If (A)	SWITCHING TIME at 25°C Ton (s)	for If (A)	Toff (s)	MIN. dV/dt @ 25°C (V/us)	ABS. MAX. RATINGS 1Cy PK SURGE I@25°C (A)	MAX TEMP (°C)	MAX GATE POWER (W)	DWG. No.
1#	TR7010	700	10	25A	50mØ	80m	3.0	5.0m	125J	2.2	30	2 0u§	10	50u§	50 Ø§	125		240m	S313
2	10RC70	700	10	65C	10mØ	15m	2.0	2.2m	105J	2.3	10	3 0u	10		20	125	105J	.50 †	TO48
3#	CR6-803RB	700	10	70C	28mØ	80m	3.0	5.0m†	100C	2.0	16	2.3u	20	80u	20	100	125	5.0	
4#	CR6-803RBA	700	10	70C	28mØ	80m	3 0	5.0m†	100C	2.0	16	2.3u	20	80u	200	100	125	5.0	
5#	T10N700C	700	12.5	85C	60m	20m	2.0	2.0m	125J	1.8	20	1.0u☑	10	20u§	50 §	120 §	125J		S131j%
6#	T10N700H	700	12.5	85C	60m	20m	2 0	2.0m	125J	1.8	20	1.0u☑	10	20u§	50 §	120 §	125J		M94e%
7#	CR12-803RB	700	14.5	75C	28mØ	60m	3.0	5.0m†	125C	2 0	32	2.3u	20	85u	20	160	125	5.0	
8#	CR12-803RBA	700	14 5	75C	28mØ	60m	3.0	5.0m†	125C	2.0	32	2.3u	20	85u	200	160	125	5.0	
9#	BTY87/700R	700	15	61A	10mØ§	65m	3.5	4.5m	125J	3.0	50	3.0u§	10	15u	100	106	125J	.50	TO48
10	C36NΔ	700	16	25B		80m	3.5	2.2mØ	100J	1.3 Ø	10					125	100J	5.0	TO48
11	SCR870	700 ☑	16	25C	100m	75m	3.5	6.0mΔ	100C	3.0	50	3.0u§	10	30u§		150 §	100J	15	TO48
12#	TR7	700	16	25A	50mØ	80m	3.0	3.0m	125J	2.0	50	2.0u§	10	50u§	50 Ø	250		240m	S313
13	202P	700	16	58C	10m§Ø	80m	3.5	4.0m	100J	1.6	10					125	100J	.50	TO48
14	2N691	700	16	65C		80m$	3 0 $	2.2m	65C	2.0 †	16					150 *§	125C	.50 †	TO48
15	JAN2N691	700	16 Δ	65C	50m	80m	3 0	2.0m	25	2.0 †	50	5.0u	10	40u		150	125A	.5 †	TO48
16#	BTY91/700R	700	16	75B	10mØ§	40m	3 0	4.5m	125J	2.0	50	3.0u§	10	20u§	100	136	125J	5.0	TO48
17	203P	700	16	92C	8m§Ø	80m	3 7	4.0m	100J	1.6	10					125	100J	.50	TO48
18	16C70	700	16	125J	50m	15m	2 0	10m	125J	2.0	50	7.0u	16	75u§		150	125J	5.0 Ø	TO48#Δ
19	16C70B	700	16	125J	50m	40m	2.0	10m	125J	2.0	50	7.0u	16	75u§	25	150	125J	5.0 Ø	TO48#Δ
20	16C70C	700	16	125J	50m	40m	2.0	10m	125J	2.0	50	7.0u	16	75u§		150	125J	5.0 Ø	TO48#Δ
21#	T14F700C	700	17	85C	120m	50m	3.0	10m	125J	2.5	50	1.5u☑	10	15u§	200 §	200 §	125J		S63g%
22#	T14F700E	700	17	85C	120m	50m	3 0	10m	125J	2.5	50	1.5u☑	10	15u§	200 §	200 §	125J		M329%
23#	T15N700C	700	19	85C	200m	100m	3 0	10m	125J	2.5	50	2 5u☑	10	80u§	20 §	300 §	125J		S63g%
24#	T15N700E	700	19	85C	200m	100m	3.0	10m	125J	2.5	50	2.5u☑	10	80u§	20 §	300 §	125J		M351%
25▼	C138S10M	700	20	70	150m	180	3 0	4.0m	125	4.0	100		10	10	200	200	125	40	TO48
26▼	C138S20M	700	20	70	150m	180	3.0	4.0m	125	4.0	100		10	20	200	200	125	40	TO48
27▼	C139S10M	700	20	70	150m	180	3 0	4.0m	125	4.0	100		10	10	200	200	125	40	TO48
28▼	C139S20M	700	20	70	150m	180	3 0	4.0m	125	4.0	100		10	10	200	200	125	40	TO48
29#	BTX81-700R	700	20	85B	100m	80m	3.5			1.8	50						125J	1.0 †	S94a
30#	TS735	700	22.5	25A	20mØ	80m	3.0	6.0m	125J	2 2	70	5 0u§	15	50u§	50 Ø§	250		240m	S313
31#	CR18-803RB	700	23	70C	28mØ	40m	3.0	5.0m†	125C	2 1	57	2 3u	20	85u	20	180	125	5.0	
32#	CR18-803RBA	700	23	70C	28mØ	40m	3.0	5.0m†	125C	2.1	57	2.3u	20	85u	200	180	125	5.0	
33#	T18F700C	700	23	85C	120m	50m	3 0	10m	125J	2.3	60	1.5u☑	15	20u§	50 §	300 §	125J		S63g%
34#	T18F700E	700	23	85C	120m	50m	3.0	10m	125J	2.3	60	1.5u☑	15	20u§	50 §	300 §	125J		M353%
35	40735	700	25	25C	150m	180m	3 0			2.0	25			15u	200	180	120A	1.0 †	TO48
36	C37SΔ	700	25 Δ	25C		80m	3 5	4.5m	105	2.3 †	30					125	105C	.50	TO48
37	10RC70A	700 ☑	25 Δ	45C	10mØ	90m	2 5	2.5mØ	125C	2.8	50 †	3.0u	10	30u	25 §	200 Δ	125J	.50 †	TO48
38	10RCF70A	700 ☑	25 Δ	45C	10mØ	90m	2 5	2.5mØ	125C	2.8	50 †	3 0u	10	12u§	25 §	200 Δ	125J	500m†	TO48
39#	2N691A	700	25	60C	50m	40m	3.0	5.0m	125J	2 0 Δ	50	1 4u	10	20u	100	150	125	5 Ø	TO48
40#	2N691AS	700	25	60	50m	40m	3 0	1.5m	125	1.7	30	1 4u	10	12u	100	200	125	5.0	TO48
41#	2N691S	700	25	60	50m	40m	3.0	1.5m	125	1.7	30	1 4u	10	12u	25	200	125	5.0	TO48
42	201P	700	25	60C	8m§Ø	40m	3 0	4.0m	125J	2.0	50					150	125J		TO48
43#	24TB7	700	25	84B		.10	3 0	7.5m		2.3	31					180	125	1.0	S266
44#	26TB7	700	25	84B		10	3 0	7.5m		2.3	31					180	125	1.0	S63a
45#	BTX82-700R	700	26	87B	10	80m	3 5					5.0u		50u		550 *	125J	5.0 Ø	TO48
46#	T22N700C	700	28	85C	200m	100m	3.0	10m	125J	1.9	60	2.5u☑	20	80u§	20 §	400 §	125J		S63g%
47#	T22N700E	700	28	85C	200m	100m	3 0	10m	125J	1.9	60	2.5u☑	20	80u§	20 §	400 §	125J		M353%
48#	BTX13/700R	700	30	25§	40m§	50m	3 0			3 5 §	250	4.0u§	10	6.0u§	20 §	300	125J	5.0	S189
49#	23TB7	700	31	82B	150m	100m	3 0	7.5m		2 4	63					260	125C	1.0	S266
50#	25TB7	700	31	82B	150m	100m	3 0	7.5m		2 4	63					260	125C	1.0	S63a
51	SCR167A	700 ☑	35	25C	50m	25m	2.0	2.0mΔ	125C	2.0	50	1.0u§	200	20u§		200 §	125J	15	TO48
52	SCR1670A	700 ☑	35	25C	50m	40m	3 0	2.0mΔ	125C	2.0	50	1 5u§	10	20u§		250 §	125J	15	TO48
53	SCRF167A	700 ☑	35	25C	100m	25m	2 0	2.0mΔ	125C	2.0	50	20u§	10	6.0u§		200 §	125J	15	TO48
54	SCRF1670	700 ☑	35	25C	100m	40m	3.0	2.0mΔ	125C	2.0	50	2.0u§	10	12u§		200 §	125J	15	TO48
55	16RC70A	700 ☑	35 Δ	35C	20mØ	40m	2.0	2.3mØ	125C	2.3	70 †		10	75u§	10 §	250 Δ	125J	.50 †	TO48
56	18RC70	700 ☑	35 Δ	45C	20mØ	40m	2.0	2.3mØ	125C	2.0	70 †					350 Δ	125J	.50 †	TO48
57▼	C144S15M	700	35 Δ	63	125	150	3 0	4.0	125	3 0	100		10	15	200	250	125	40	TO48
58▼	C144S30M	700	35 Δ	63	125	150	3 0	4 0	125	3.0	100		10	30	200	250	125	40	TO48
59#	TK7FA	700	35	85C		300m	3 0	10m	125J	2.0	100	3.0u§	100	20u§	100 §	700		900m	S317
60#	TK7FB	700	35	85C		300m	3.0	10m	125J	2.0	100	3.0u§	100	40u§	100 §	700		900m	S317
61▼#	5TCA70	700	35	125	60	100m	3.0							100u	100 §	1.5k	125	10	
62	35C70☑	700	35	125J	200m§	200m	3 0	10m	125J	2.5	220	10u	35	40u§		900	125J	15 Ø	TO94#Δ
63	35C70B	700	35	125J	200m§	200m	3 0	10m	125J	2.5	220	10u	35	40u§	100	900	125J	15 Ø	TO94#Δ
64	35C70BF	700	35	125J	200m§	200m	3 0	10m	125J	2.5	220	10u	35	40u§	100	900	125J	15 Ø	TO83#Δ
65	35C70F	700	35	125J	200m§	200m	3 0	10m	125J	2.5	220	10u	35	40u§		900	125J	15 Ø	TO83#Δ
66#	CR30-703A	700	36	25	66m	60m	3 0			1.4	30	20u	30	73u		500	125	5.0	TO49
67#	CR30-804AA	700	38	70C	20mØ	80m	3 0	10m†	125C	2.5	100	20u	100	20u☑	20	660	125	5.0 Ø	TO49
68▼#	6TC70	700	40			100m	3 0			1.3		10u		150u	50 §Ø	1.5k*	125J		S183a
69#	27TB7	700	40	74B		10	3 0	15m		2.1	78					450	125C	1.0	S63a
70#	CR24-803RB	700	40	80C	28mØ	40m	3 0	5.0m†	125C	1 4	50	2 3u	20	85u	20	320	125	5.0	
71#	CR24-803RBA	700	40	80C	28mØ	40m	3 0	5.0m†	125C	1.4	50	2.3u	20	85u	200	320	125	5 0	
72#	T30F700C	700	40	85C	300m	100m	3 0	10m	125J	1.8	100	2.0u☑	25	25u§	50 §	800 §	125J		S63g%
73#	T30F700E	700	40	85C	300m	100m	3 0	10m	125J	1.8	100	2 0u☑	25	25u§	50 §	800 §	125J		M351%
74♦	40RCS70	700 ☑	40	87C	200m	110m	3 0	1.5m	105J	1 7 †	40	4 5u	10		25 §	1.0k§	105J	500m†	TO65
75▼#	6TCA70	700	40	125	60	100m	3 0							100u	100 §	1.5k	125	10	
76	251P	700	40	125J		100m	3 0	10m	125J	1.7	50	4.0u	50	100u	300	1.2k*	125J	3 †	Z59
77	NLE45S	700	45	89C	.10	70m	2 5	4.0m	125J	3.0	500	5 0u	50	30u	100	1.2k	125J	.50 †	TO83
78	NLE46S	700	45	89C	10	70m	2 5	4 0m	125J	3.0	500	5 0u	50	30u	100	1.2k	125J	.50 †	TO94
79#	28TB7	700	47	73B		10	3.0	15m		1 9	95					550	125	1 0	S63a
80#	BTY95/700R	700	50	75B	10mØ§	80m	3 0	12m	125J	3.3	500	3.0u	50	20u	10	680	125J	5.0	TO49
81	C146S	700	55 Δ			100m	3 0							40u☑			125A		S236
82#	TK7	700	55	60C	100m	125m	3 0	10m		2 0	100	5.0u	50	30u	20 Ø	700	100C	.50	TO49
83#	29TB7	700	55	68B		10	3.0	15m		1 8	110					650	125	1.0	S63a
84	NL577S	700	55	82C	.50	.15	3 0	6.0m	125J	2.4	110				200	700	125J	2.0 †	TO103
85	C45SΔ	700	55 Δ	85C	100m	75m	3 0	4.0m	120C	3.1 Δ	500	5.0u	50	30u§	15 §	700	125J	500m	S315
86	C46SΔ	700	55 Δ	85C	100m	75m	3 0	4.0m	120C	3.1 Δ	500	5.0u	50	30u§	15 §	700	125J	500m	TO94
87	36RA70	700 ☑	55 Δ	90C	500m	150m	2 5	13m	125J	2.2 †	110	2.0u	50	25u§	200 Δ	1.0kΔ	125J	2 †	TO94
88	37RA70	700 ☑	55 Δ	90C	500m	150m	2 5	13m	125J	2.2 †	110	2.0u	50	25u§	200 Δ	1.0kΔ	125J	2 †	TO83
89	2191P	700	55	94C		200m	3 0	10m	125J	2.0 §	50	3.5u	50	15u	100	1.2k*	125J	3 †	Z59
90	2192P	700	55	94C		200m	3 0	10m	125J	2.0 §	50	8.0u	50	20u	100	1.2k*	125J	3 †	Z59
91	555S	700	55	99C		150m	3 0								200		125J		TO49
92	556S	700	55	99C		150m	3 0								200		125J		TO83
93#	5TC70	700	55	125	20m	45m	3.0			1.3	50	5.0u	50	25u		500	100J	20	S185
94	C145S	700	55 Δ	125J	500m	150m	3 0	10m	125C	2.4 †	110				200	700 Δ	125J	2 †	TO103
95#	BTX49-700R	700 §	60	85C	150m	80m	3.0	18m	125J	3.5	500	5.0u	50	50u		1.0k	125J	1 0 †	TO94
96#	T50F700	700	62 5	85C	300m	100m	3 0	20m	125J	2.2	160	2.0u☑	25	30u§	50 §	800 §	125J		M330b%
97#	T50N700	700	62 5	85C	300m	100m	3 0	20m	125J	2.2	160	2.5u☑	25	80u§	20 §	800 §	125J		M330b%
98	2515P	700	63	120C		10	3 0	15m	150J	1.7	50				300	1.2k	150J		TO83
99#	CR50-703A	700	64	25	73m	100m	3 0									600	125	5 0	TO49
100#	TK170	700	70	25A	50mØ	125m	3 0	10m	125J	2.0	200	5.0u§	100	100u§	50 §	1.0k		375m	S317
101	2N1807	700	70	62C		130m$	3 0 $	3.0m	62C	1 8 †	70					1.0k*	125C	.50 †	TO49
102	2N3092	700	70 Δ	62C		200m$	3 0 $	2.5m	62C	1.9 †	70				20	1 0k§*	125C	.50 †	TO49
103	2N3100	700	70 Δ	62C		200m$	3 0 $	2.5m	62C	1.9 †	70				20	1.0k§*	125C	.50 †	TO49
104	2N1801	700	70 Δ	65C		130m$	3 0 $	3.0m	65C	1.8 †	70					1.0k*	125C	.50 †	TO83
105	2N3988	700	70	70C		200m$	3 0 $	15m	125C	2.9 †	220			50u	200 §	1.0k*	125C	10 Ø	TO94
106#	CR70B14	700	70	74C		70m	3 0	6.0m	125J	1.7	220				10 Δ	1.5kΔ	125J	5.0 Ø	S189d
107#	36TB7	700	70	75B		15	3 0	15m		2.0	140					760	125	1 0	S63d
108#	CR70C14	700	70	83C		100m	3.0	15m	125J	1.8	220 §				100 Δ	1.5kΔ	125J	5 0 Ø	S332
109#	BTX50-700R	700 §	70	85C	150m	80m	3 0	18m	125J	2.5	500	5.0u	50	50u		1.5k	125J	1.0 †	TO94
110#	BTY99/700R	700	70	85B	10mØ§	70m	3 0	12m	125J	2.5	500	3.0u	50	20u	10	900	125J	5.0	TO49

SYMBOLS AND CODES EXPLAINED IN INTERPRETER

6. SILICON CONTROLLED RECTIFIERS

IN ORDER OF (1) PEAK REV. VOLT., (2) MAX. CONT. CUR., (3) TEMPERATURE, (4) TYPE No.

LINE No.	4 TYPE No.	1 PRV and VBO (V)	MAX. CONT. CURRENT 2 Idc (A)	3 at TEMP (°C)	MAX. HOLD. CUR Ih @ 25°C (A)	MAX. GATE FIRING SPEC at 25°C Igf (A)	Vgf (V)	MAX SAT I Ir@PRV and Is@VBO (A)	at TEMP (°C)	MAX. FWD. VOLT. DROP at 25°C Vf (V)	@ If (A)	SWITCHING TIME at 25°C Ton (s)	for If (A)	Toff (s)	MIN. dV/dt @ 25°C (V/us)	ABS. MAX. RATINGS 1Cy PK SURGE I@25°C (A)	MAX TEMP (°C)	MAX GATE POWER (W)	DWG. No.
1#	TK170FA	700	70	85C		300m	3.0	10m	125J	2.0	200	3.0u§	100	20u§	100 §	1.0k		900m	S317
2#	TK170FB	700	70	85C		300m	3.0	10m	125J	2.0	200	3.0u§	100	40u§	100 §	1.0k		900m	S317
3▼#	10TCA70	700	70	125	100	100m	3.0							100u	100 §	1.5k	125	10	
4	70C70	700	70	125J	200m§	200m	3 0	10m	125J	1.8	220	10u	70	40u§		1.6k	125J	15 Ø	T094#△
5	70C70B	700	70	125J	200m§	150m	3.0	10m	125J	1.8	220	10u	70	40u§	100	1.6k	125J	15 Ø	T094#△
6	70C70BF	700	70	125J	200m§	150m	3 0	10m	125J	1.8	220	10u	70	40u§	100	1.6k	125J	15 Ø	T094#△
7	70C70F	700	70	125J	200m§	200m	3 0	10m	125J	1.8	220	10u	70	40u§		1.6k	125J	15 Ø	T083#△
8#	BTX37/700R	700	75		10mØ	80m	3.0			3.3	500	3.0u	50	20u		680	125J	.50	T049
9▼#	12TC70	700	80		100m	100m	3.0			1.5		10u		150u	50 §	1.5k*	125J		S183b
10#	CR31-803A	700	80	55C	38mØ	60m	3 0	10m†	125C	1.7	100	3.7u	100	130u	20	700	135J	5.0 Ø	T049
11#	CR31-804AA	700	80	55C	38mØ	60m	3 0	10m†	125C	1.7	100	5.7u	100	20u⊘	20	700	135J	5.0 Ø	T049
12	36RC70A	700 ⊘	80 △	75C	20 Ø	700m	2.5	2.5mØ	125C	2.2 †	160					850 △	125J	2.0 †	T094
13	36RCF70A	700 ⊘	80 △	75C	20 Ø	700m	2.5	2.5m	125C	2.2 †	160		50	20 §		850 △	125J	2.0 †	T094
14	36RE70	700 ⊘	80 △	75C	500m	150m	2.5	5.0m	125C	2.2 †	160				10 §	1.0k△	125J	2.0 †	T094
15	37RC70A	700 ⊘	80 △	75C	20 Ø	700m	2.5	2.5mØ	125C	2.2 †	160					850 △	125J	2.0 †	T083
16	37RCF70A	700 ⊘	80 △	75C	20 Ø	700m	2 5	2.5m	125C	2.2 †	160			20 §		850 △	125J	2.0 †	T083
17	37RE70	700 ⊘	80 △	75C	500m	150m	2 5	5.0m	125C	2.2 †	160				10 §	1.0k△	125J	2.0 †	T083
18#	51RC70	700	80 △	84B	50m	70m	2.5	2.0		2.2	50	4.5u	50	60u	20	700	125A	5.0 Ø	S237c
19	36REH70	700 ⊘	80 △	100C	500m	150m	2 5	15m	150C	2.1 †	160				10 §	900 △	150J	2.0 †	T094
20	37REH70	700 ⊘	80 △	100C	500m	150m	2 5	15m	150C	2.1 †	160				10 §	900 △	150J	2.0 †	T083
21▼#	12TCA70	700	80	125	100	100m	3 0							100u	100 §	1.5k	125	10	
22	250P	700	80	125J		100m	3 0	10m	125J	1.3	50	4.0u	50	100u	300	1.6k*	125J	3 †	Z59
23#	37TB7	700	85	66B		.15	3.0	15m		1 9	175					930	125	1 0	S63d
24#	CR70-801A	700 †	85	75C		100m	3.0	15m	25C	1.7	70				20	1.0k	125C	1 0	T049
25#	CR70-801C	700	85	75C		100m	3 0	30m†	125C	1.7	210				20	1.0k	125	5.0	M376
26#	BTX51-700R	700	95	85B	10m§Ø	70m	3.0	13m	125J	2.1	500	3.0u	50	20u	10	900	125J	5.0	T049
27#	TT7FA	700	95	85C		500m	3 0	25m	125J	2.0	350	3.0u§	100	20u§	100 §	2.0k		1.5	S204a
28#	TT7FB	700	95	85C		500m	3 0	25m	125J	2.0	350	3.0u§	100	40u§	100 §	2.0k		1.5	S204a
29#	BTX38/700R	700	100		10mØ	70m	3 0			2.5	500	3.0u	50	20u		1.0k	125J	.50	T049
30#	TT7	700	100	25A	50mØ	500m	3.0	25m	100J	2.2	350	5.0u§	100	100u§	50 §	2.0k		1.5	S204a
31#	38TB7	700	100	62B		15	3.0	15m		1.8	205					1.0k	125	1.0	S63d
32	100C70	700	100	125J	200m	200m	2.5	25m	125J	2.0	500	10u	100	40u§		2.0k	125J	10 Ø	T093#△
33	100C70B	700	100	125J	200m	200m	2.5	25m	125J	2.0	500	10u	100	40u§	100	2.0k	125J	10 Ø	T093#△
34#	CR51-803A	700	105	55C	38mØ	60m	3 0	10m†	125C	1.6	150	3.4u	120	185u	20	760	135J	5.0	T049
35	72RE70	700 §	110	60C	15mØ	70m	2 0	2.5mØ	125J	1.8	220					1.0k△	125J	5 0 Ø	T083
36	72RE70A	700 §#	110	60C	15mØ	70m	2.0	2.5mØ	125J	1.8	220					1.0k△	125J	5.0 Ø	T083
37	2541P	700	110	60C		200m	3.0	10m	125J	1.7 §	50	3.5u	50	15u	100	1.4k*	125J	3.0 †	Z59
38	2542P	700	110	60C		200m	3 0	10m	125J	1.7 §	50	8.0u	50	20u	100	1 4k*	125J	3 0 †	Z59
39	C50S	700	110 △	60B	100m	75m	3.0	6.0m△	125J	2.5	500	5.0u	50	30u§	15 §	1.0k	125	500m	T094
40	C52S	700	110 △	60B	100m	75m	3 0	6.0m△	125J	2.5	500	5.0u	50	30u§	15 §	1.0k	125	500m	S315
41	71RC70A	700 ⊘	110 △	62C	20mØ	70m	2 5	2.5mØ	125J	1.9 †	220		50	30u§		1 0k△	125J	.5 †	T094
42	72RC70A	700 ⊘	110 △	62C	20mØ	70m	2.5	2.5mØ	125J	1.9 †	220		50	30u§		1.0k△	125J	.5 †	T083
43	71RB70	700 ⊘	110 △	65C	500m	150m	2.5	13m	125J	2.5 †	220	2.0u	50	30u§	200 △	1.2k△	125J	2 †	T094
44	71REB70	700 ⊘	110 △	65C	500m	150m	2 5	5.0m	125J	2.5 †	220	2.0u	50	30u§	200 △	1.2k△	125J	2 †	T094
45	72RB70	700 ⊘	110 △	65C	500m	150m	2.5	13m	125J	2.5 †	220	2.0u	50	30u§	200 △	1.2k△	125J	2 †	T083
46	72REB70	700 ⊘	110 △	65C	500m	150m	2 5	5.0m	125J	2.5 †	220	2.0u	50	30u§	200 △	1.2k△	125J	2 †	T083
47	C150S△	700	110 △	70C	500m	150m	3.0	20m	120C	2.6	500	8.0u	50	100u§	200	1.5k	125J	10	T094
48	C151S△	700	110 △	70C	500m	150m	3.0	20m	120C	3.5	500	8.0u	50	50u§	200	1.0k	125J	10	S91
49	C152S△	700	110 △	70C	500m	150m	3.0	20m	120C	2.6	500	8.0u	50	100u§	200	1 5k	125J	10	S315
50	C153S△	700	110 △	70C	500m	150m	3 0	20m	120C	3.5	500	8.0u	50	50u§	200	1.0k	125J	10	S108
51	71RA70	700 ⊘	110 △	80C	500m	150m	2 5	13m	125J	1.9 †	220	2.0u	50	50u§	200 △	1.6k△	125J	2 †	T094
52	71REA70	700 ⊘	110 △	80C	500m	150m	2.5	5.0m	125J	1.9 †	220	2.0u	50	50u§	200 △	1 6k△	125J	2 †	T094
53	72RA70	700 ⊘	110 △	80C	500m	150m	2 5	13m	125J	1.9 †	220	2.0u	50	50u§	200 △	1.6k△	125J	2 †	T083
54	72REA70	700 ⊘	110 △	80C	500m	150m	2 5	5.0m	125J	1.9 †	220	2.0u	50	50u§	200 △	1.6k△	125J	2 †	T083
55	NLE151S	700	110	80C	50	.15	2 5	8.0m	125J	2.6	500	8.0u	50	50u	200	1.4k	125J	2.0 †	T094
56	NLF151S	700	110	80C	500m	150m	2.5	8.0m	125J	2.6 †	500	8.0u	50	50u⊘	200	1.4k	125J	2.0 †	T094
57	NLF153S	700	110	80C	500m	150m	2.5	8.0m	125J	2.6 †	500	8.0u	50	50u⊘	200	1.4k	125J	2.0 †	T083
58	NLE153S	700	110	83C	.50	15	2.5	8.0m	125J	2.6	500	8.0u	50	50u	200	1.4k	125J	2.0 †	T083
59	NLF158S	700	110	83C	500m	150m	2.5	8.0m	125J	3.0 †	500	5.0u	50	40u§	200	1.4k	125J	2 0 †	T094
60	NLF159S	700	110	83C	500m	150m	2.5	8.0m	125J	3.0 †	500	5.0u	50	40u⊘	200	1 4k	125J	2.0 †	T083
61	NLE150S	700	110	89C	50	15	2 5	4.0m	125J	2.6	500	8.0u	50	150u	200	1 6k	125J	2.0 †	T094
62	NLE152S	700	110	89C	50	15	2.5	4.0m	125J	2.6	500	8 0u	50	150u	200	1.6k	125J	2.0 †	T083
63	NLH150S	700	110	89C	.50	15	2 5	4.0m	125J	2.6	500	8.0u	50	150u	200	1.6k	125J	2.0 †	T094
64	NLH152S	700	110	89C	50	15	2.5	4.0m	125J	2.6	500	8.0u	50	150u	200	1.6k	125J	2 0 †	T083
65	71REJ70	700 ⊘	110 △	90C	500m	150m	2 5	15m	150J	2.5 †	220	2.0u	50	50u§	50 △	1 0k△	150J	2 †	T094
66	72REJ70	700 ⊘	110 △	90C	500m	150m	2.5	15m	150J	2.5 †	220	2.0u	50	50u§	50 △	1.0k△	150J	2 †	T083
67	NLC150S	700	110	90C	.50	15	2 5	10m	125J	2.6	500	8.0u	50	100u	200	1.8k	125J	2 0 †	T049
68	NLC152S	700	110	90C	50	15	2 5	10m	125J	2.6	500	8.0u	50	100u	200	1.8k	125J	2.0 †	T083
69	NLC350S	700	110	90C	50	15	2 5	8.0m	125J	2.6	500	8.0u	5.0	100u	200	1.8k	125J	2.0 †	M456
70	71REH70	700 ⊘	110 △	105C	500m	150m	2.5	15m	150J	1.9 †	220	2.0u	50	60u§	50 △	1 4k△	150J	2 †	T094
71	72REH70	700 ⊘	110 △	105C	500m	150m	2 5	15m	150J	1.9 †	220	2.0u	50	60u§	50 △	1.4k△	150J	2 †	T083
72#	10TC70	700	110	125	20m	60m	3.0			1.5	110	5.0u	110	25u		1 1k	125J	20	S185
73	C158S	700	110 △	125J	500m	150m	3 0	14m	125C	3 5 †	500				200 §	1.2k△	125J	2.0 Ø	T094
74	C159S	700	110 △	125J	500m	150m	3.0	14m	125C	3 5 †	500				200 §	1.2k△	125J	2.0 †	S315
75#	T95F700	700	115	85C	300m	100m	3 0	30m	125J	1.8	300	2 5u⊘	50	30u§	50 §	2 0k§	125J		M330a%
76#	CR100-801C	700 △	124	80C		100m	3 0	15m	25C	1.7	100				20	1 2k	125C	1 0	M376
77#	CR100-801D	700	125	80C	30mØ	100m	3 0	30m†	125C	1.7	300			100	20	1.5k	125	5 0	T049
78	2505P	700	125	95C		.10	3 0	15m	150J	1.3	50				300	1.6k	150J		T083
79#	42TB7	700	135	57B		.20	3 0	15m		2.2	265					1 4k	125	1.5	M308
80♦#	30TC70	700	140		150m	100m	3.0			1.5					50 §Ø	3.5k*	125J		S348
81▼#	20TCA70	700	140	125	150	100m	3 0							100u	100 §	3.0k	125	10	
82#	TT270FA	700	150	85C		500m	3 0	25m	125J	2.0	450	3.0u§	100	20u§	100 §	3.2k		1.5	S204a
83#	TT270FB	700	150	85C		500m	3.0	25m	125J	2.0	450	3.0u§	100	40u§	100 §	3.2k		1.5	S204a
84	150C70	700	150	125J	200m	200m	2 5	25m	125J	1.7	500	10u	150	40u§		3.0k	125J	10 Ø	T093#△
85	150C70B	700	150	125J	200m	200m	2 5	25m	125J	1.7	500	10u	150	40u§	100	3.0k	125J	10 Ø	T093#△
86	101RA70	700 ⊘	160 △	80C	500m	150m	2.0	20m	125J	2.1 †	314	2.0u	150	35u§	200 △	2.0k△	125J	2 †	T093
87	101RC70	700 ⊘	160 △	80C	50mØ	150m	2 5	4.5mØ	125J	1.7 †	314		150	25u§		2.0k△	125J	2 †	T093
88	101RE70	700 ⊘	160 △	80C	500m	150m	2 5	8.0m	125J	2 1 †	314	2.0u	150	35u§	4.0 △	2.0k△	125J	2 †	T093
89#	43TB7	700	175	62B		.20	3 0	15m		2.2	390					1.9k	125	1.5	M308
90	2N3891	700	175	80	200m	400m	4.0	15m	125	1.8	175					4.5k	125	3.0	T09
91	C350S	700	175	80C	500m	150m	3 0	10m	25	2.6	500	8.0u	50	100u	200	1.5k	120C	2.0	M514
92	2201P	700	175	125J		300m	4 0	15m	125J	1 3 §	100	4.0u	100	30u	100	4.0k*	125J	3.0 †	T093
93	2202P	700	175	125J		300m	4 0	15m	125J	1.3 §	100	8.0u	100	40u	100	4.0k*	125J	3.0 †	T093
94	C358S	700	180 △	125J	500m	150m	3.0	14m	125C	3 5	500	2.0u	50	30u⊘	200	1.2k	125J	2.0	M514
95#	46TB7	700	195	56B		.20	3 0	15m		2 0	390					2.1k	125	1 5	M308
96	261P	700	200	80		15	3 0	15m	125J	1.4	100				300	3.3k	125		T093
97	2181P	700	200	80C		300m	4 0	15m	125J	1.3 §	100	4.0u	100	20u	100	3.3k*	125J	3 †	T093
98	2182P	700	200	80C		300m	4 0	15m	125J	1.3 §	100	8.0u	100	30u	100	3.3k*	125J	3 †	T093
99	263P	700	200	85		.15	3 0	15m	125J	1.3	50				300	1.6k	125		M414
100#	TT370	700	200	85C	40mØ	500m	3 0	25m	125J	1 6	600	5 0u§		100u§	100 Ø§	4.0k		1 5	S204a
101▼#	30TCA70	700	200	125	150	100m	3 0								100 §	5 5k	125	10	
102#	CR155-804NA	700	210	70C	35mØ	150m	3 5	30m†	125C	1 8	450			35u⊘	100	2.1k	125	5.0 Ø	M201
103#	47TB7	700	220	50B		20	3.0	15m		1.9	440					2 4k	125	1.5	M308
104#	CR153-803A	700	220	70C	35mØ	150m	3.5	30m†	125C	1.6	450				100	3.0k	125	5.0 Ø	M201
105#	20TC70	700	220	125	50m	100m	3.0			1.5	200	5.0u	200	30u		2.5k	125J	20	S183
106#	CR152-803A	700	230	70C	35mØ	150m	3.5	30m†	125C	1.5	450				100	3.1k	125	5.0	M201
107	151RC70	700 ⊘	235 △	62C	50mØ	100m	2.5	4.5mØ	125J	1.7 †	471		150	25u§		3.0k△	125J	2 †	T093
108	151RB70	700 ⊘	235 △	75C	500m	150m	2.5	20m	125J	2 2 †	471	2 0u	150	40u§	200 △	2.5k△	125J	2 †	T093
109	151REB70	700 ⊘	235 △	75C	500m	150m	2.5	8.0m	125J	2.2 †	471	2.0u	150	40u§	200 △	2.5k△	125J	2 †	T093
110	151RC70A	700 ⊘	235 △	80C	50mØ	100m	2.5	4.5mØ	125J	1.4 †	471		150	40u§		3.5k△	125J	2 †	T093

SYMBOLS AND CODES EXPLAINED IN INTERPRETER

6. SILICON CONTROLLED RECTIFIERS

IN ORDER OF (1) PEAK REV. VOLT., (2) MAX. CONT. CUR., (3) TEMPERATURE, (4) TYPE No.

LINE No.	4 TYPE No.	1 PRV and VBO (V)	MAX. CONT. CURRENT 2 Idc (A)	3 at TEMP (°C)	MAX. HOLD. CUR Ih @ 25°C (A)	MAX. GATE FIRING SPEC at 25°C Igf (A)	Vgf (V)	MAX SAT I Ir@PRV and Is@VBO (A)	at TEMP (°C)	MAX. FWD. VOLT. DROP at 25°C Vf (V)	@ If (A)	SWITCHING TIME at 25°C Ton (s)	for If (A)	Toff (s)	MIN. dV/dt @ 25°C (V/us)	ABS. MAX. RATINGS 1Cy PK SURGE I@25°C (A)	MAX TEMP (°C)	MAX GATE POWER (W)	DWG. No.
1	C180S△	700	235 △	80C	500m	150m	3 0	10m	25	2.9 †	1 5k	8 0u	100	75u	200	3 5k	125C	2 0	TO93
2	NLF180S	700	235 △	80C	500m	150m	2 5	6.0m	125J	2.8	1 5k	8 0u	100	80u	200	3 5k	125J	2.0 †	TO93
3#	TT270	700	235	80C	250m	500m	3.0	25m	125J	1.7	450	5.0u	15	20u	100 §∅	3 2k	125C	1.0	S204
4	151RA70	700 ⧄	235 △	85C	500m	150m	2 5	20m	125J	1.8 †	471	2 0u	150	60u§	200 △	3.5k△	125J	2 †	TO93
5	151REA70	700 ⧄	235 △	85C	500m	150m	2 5	8 0m	125J	1.8 †	471	2 0u	150	60u§	200 △	3.5k△	125J	2 †	TO93
6♦	C280S	700	235	85C	100m	150m	3 0			1 4	500	10u	5 0	250u§	100 §	3 5k	125J	3.0	S132
7▼	C281S	700	235	85C	100m	150m	3 0			1 4	500	10u	5 0	250u§	100 §	3 5k	125J	3 0	S247a
8#	CR151-803A	700	240	70C	35m∅	150m	3 5	30m†	125C	1 4	450				100	3.3k	125	5 0	M201
9	2N3360	700	250	80C	200m§	400m§	4.0 §	15m	125C	2.0 §	250					5 0k§*	125C	3 0 †	TO108
10#	T250F700	700	250	85C	300m	200m	2 0	50m	125J	1 7	500	3.0u	100	30u§	400 §	5 5k§	125J	150	M387
11▼#	TY180NP7K2	700	260	70B	50m	200m	3.5	26m	125J	1 0	600	10u⧄	500	20n⧄	20 §	4 3k	125J	1.5 †	S375
12▼#	TY180QP7K2	700	260	70B	50m	200m	3 5	26m	125J	1.6	600	10u⧄	500	30u⧄	20 §	4.3k	125J	1.5 †	S375
13#	61TB7	700	275	67B		30	3 0	40m		2 4	665					3 2	125	2.0	M308a
14	260P	700	275	80		15	3 0	15m	125J	1 2					300	3 3k	125		TO93
15♦#	40TC70	700	300		150m	100m	3.0			1 5					50 §∅	4 5k*	125J		S348
16	273P	700	300	70		15	3 0	15m	125J	1 3	100				300	3.3k	125		M414
17▼#	40TCA70	700	300	125	150	100m	3 0								100 §	5 5k	125	10	
18	2231P	700	300	125J		300m	4 0	15m	125J	1 3 §	100	4 0u	100	30u	100	4 5k*	125J	3 0 †	M247
19	2232P	700	300	125J		300m	4 0	15m	125J	1 3 §	100	8 0u	100	40u	100	4 5k*	125J	3 0 †	M247
20	2248P	700	300	125J		300m	4 0	10m	125J	1 0 §	100	5 0u	150	50u	100	5 0k*	125J	3 0 †	M308c
21#	62TB7	700	315	65B		30	3 0	40m		2 2	665					3 7k	125	2 0	M308a
22#	CR253-803A	700	320	40C	35m∅	150m	3 5	30m†	125C	1 6	450				100	3 5k	125	5.0 ∅	M201
23#	CR252-803A	700	336	50C	35m∅	150m	3 5	30m†	125C	1.5	450				100	3 6k	125	5.0	M201
24#	70TB7	700	355	67B		30	3 0	40m		2 2	850					4 1	125	2.0	M308a
25	C380S	700	380	65C	500m	150m	3 0 §	10m	25C	2 8	1 5k	8.0u	100	100u	200	3 5k	120	2 0	M514
26	2N3537	700	400	20A	200m§	400m	4 0	15m	125J	1.9	250					5 0k	125J	16	M247
27#	71TB7	700	400	65B		30	3 0	40m		2 0	850					4 6k	125	2 0	M308a
28▼	C600S	700	400 △	72	500	150	6 5			1 5	2.2k	4 0		250	100	13k	125	40	
29	250RA70	700 ⧄	400 △	75C	100m	150m	3 0	25m	125J	1 7 †	785	5 0u	250	40u§	100 △∅	5 0k△	125J	3 0	TO118
30#	FT500AY14	700	400	75C		350m	4 0	3 0m	125J	2.2	1.2k§		400	15u⧄	200 △	7 0k△	125J	16 ∅	M406
31#	73TB7	700	430	64B		30	3 0	40m		2 0	1 0k					5 1k	125	2 0	M308a
32#	CR7K803A45	700	435	65C	55m∅	150m	3 5	50m	125J	1 8	1 0k	3 5u	600	180u	100	6 0k	125J	5.0 ∅	M308b
33#	CR7K803A4	700	460	65C	55m∅	150m	3.5	50m	125J	1 7	100	3.5u	600	180u	100	6 4k	125J	5.0 ∅	M308b
34	276P	700	470			15	3 0	15m	125J	1 2	100				300	5.5k	125		M247
35#	74TB7	700	470	63B		300m	3.0	40m		1 8	1 0k					5.6k	125	2 0	M308a
36	6RW71PY	700	470	65C		250m	3 1	10m∅	125J	65 ∅	300				4.0	5 5k§	125J	16	S132
37	6RW71RY	700	470	65C	25m	250m	3.1	10m∅	125J	65 ∅	300				4 0	5 5k§	125	16	S132
38♦	C290S	700	470	65C	100m	150m	3.5			1 2	500	10u	5.0	250u§	100 §	5.5k	125J	3 0	S132
39♦	C291S△	700	470	65C	100m	150m	3 5			1 2	500	10u	5 0	250u§	100 §	5 5k	125J	3 0	S247a
40	C291S⧄	700	470	66C	100m	150m	3.0	15m	125J	1 2 †	500	5 0u	5 0	100u§	100 §	5 5k	125J	3 0 †	M331a
41	272P	700	470	71		15m	3.0	15m	125J	1 2	100				300	5 5k	125		M414
42	300RA70	700 ⧄	470 △	75C	100m	150m	3.0	24m	125J	1 4 †	945	5.0u	250	50u§	100 ∅△	5 5k△	125J	3 †	TO118
43	300RB70	700 ⧄	470 △	75C	100m	150m	3.0	24m	125J	1 6 †	945	5 0u	250	50u§	25 △	5 5k△	125J	3 †	TO118
44	NLF291S	700	470 △	125J	100m	150m	2 5	15m	125J	1 2	500	5 0u	100	100u§	100 §	5 5k△	125J	2 0 †	M436%
45#	CR7K803A35	700	480	65C	140m	150m	3.5	50m	125J	1 6	1.0k	3 5u	600	180u	100	6 9k	125J	5.0 ∅	M308b
46#	80TB7	700	510	59B		.30	3 0	40m		1 5	1 2k					6.4k	125	2 0	M308a
47#	CR7K803A3	700	520	55C	140m	150m	3 5			1 5	1 0k					7 0k	125J	5 ∅	M308b
48▼	NLC501S	700	550	25	250m	150m	6 5 §			1 5	1 0k			200u§	100 §	7 0k	125J	5 0 †	M593
49#	81TB7	700	550	56B		30	3 0	40m		1 7	1 2k					7.0k	125	2 0	M308a
50	350RA70	700	550	65C	100m	150m	3 0	24m	125J	1 4	550	5 0u	50	100u§	100 §∅	6 2k△	125J	3.0	S158a
51▼	C387S	700	550 △	65	500	150	3 0	45	125	4 2	3 0k	2 0		30	200	5 5k	125	40	
52▼	C388S	700	550 △	65	500	150	3 0	45	125	4.2	3 0k	2 0		20	200	5.5k	125	40	
53	270P	700	550	67		15	3 0	15m	125J	1 2	500				300	6 5k	125		S295
54#	84TB7	700	595	58B		30	3 0	40m		1 6	1 6k					8.6k	125	2 0	M428
55#	CR9K803A25	700	600	65C	55m∅	150m	3 5	50m	125J	1 3	1.0k	3 5u	600	180u	100	900	125J	5 0 ∅	M308b
56	C507S	700	625 △	125J	100m	150m	4 0	50m	125C	1.4	500	5 0u	25	100u⧄	100	6.5k	125J	26	M464
57	C508S	700	625 △	125J	100m	150m	4 0	50m	125C	1.3	500	5 0u	25	60u⧄	100	9 0k	125J	26	M464
58#	CR9K803A2	700	680	65C	55m∅	150m	3 5	50m	125J	1 1	1 0k	3.5u	600	180u	100	11k	125J	5 0 ∅	M308b
59#	2WDCR152-703B	700	700 △	40B	60m∅	150m	3 5	30m	125J	2 1	775				100	3 1k	125J		
60▼	C397S	700	700 △	65	500	150	3 0	45	125	2 9	3 0k	2.0		45	200	7 5k	125	40	
61♦	C398S	700	700 △	65	500	150	3 0	45	125	2 9	3 0k	2 0		30	200	7 5k	125	40	
62#	2WDCR7K703B35	700	1 2k△	40B	80m∅	150m	3 5	50m	125J	2 0	1 3k				100	7.5k	125J		
63	C36M⧄	720	16	52C	20m∅	80m	3 0	2 0m∅	100J	2 7 †	50	1 4u	5 0	20u§	100 §	125	100J	50 †	TO48
64	C37M⧄	720	25	37C	20m∅	80m	3.0	2 0m∅	105J	2 3 †	30	1 4u	5 0			175	105J	50 †	TO48
65	C40M	720	35	62C	10m∅	40m	2 5	2 0m∅	125J	2 0 †	50	1 4u	5 0	8 0u	20 §	150	125J	.5 †	TO48
66	C45M⧄	720	55	89C	100m	70m	3 0	4 0m	125J	3 0 †	500	5 0u	50	30u§	100 §	1.2k	125J	50 †	TO83
67	C46M⧄	720	55	89C	100m	70m	3 0	4 0m	125J	3 0 †	500	5 0u	50	30u§	100 §	1.2k	125J	50 †	TO49
68	NL555M	720	55	89C	300m	150m	2 5	10m	125J	3 5 †	500	8 0u	50	100u§	200 §	1 2k	125J	2 †	TO49
69	NL556M	720	55	89C	300m	150m	2 5	10m	125J	3 5 †	500	8 0u	50	100u§	200 §	1.2k	125J	2 †	TO83
70	NLF45M	720	55	89C	100m	70m	3 0	4 0m	125J	3 0 †	500	5 0u	50	30u§	100 §	1.2k	125J	500m†	TO83
71	NLF46M	720	55	89C	100m	70m	3 0	4 0m	125J	3 0 †	500	5 0u	50	30u§	100 §	1 2k	125J	500m†	TO94
72	2N1800	720	70 △	65C		130m$	3 0 $	3 3m∅	65C	1.8 †	70					1.0k*	125C	50 †	TO83
73	C55M⧄	720	110	60C	100m	70m	2.5	4 0m	125J	2.5 †	500	5.0u	5 0	15u§	100 §	1.2k	125J	50 †	TO49
74	C56M⧄	720	110	60C	100m	70m	2 5	4 0m	125J	2 5 †	500	5 0u	5 0	15u§	100 §	1 2k	125J	50 †	TO83
75	C151M⧄	720	110	80C	500m	150m	2 5	8.0m	125J	2.6 †	500	8.0u	50	30u§	200 §	1.4k	125J	2 0 †	TO49
76	C153M⧄	720	110	80C	500m	150m	2 5	8 0m	125	2 6 †	500	8 0u	50	30u§	200 §	1.4k	125J	2 0 †	TO83
77	C150M⧄	720	110	89C	500m	150m	2 5	10m	125J	2.6 †	500	8 0u	50	100u§	200 §	1 8k	125J	2 0 †	TO49
78	C152M⧄	720	110	89C	500m	150m	2 5	10m	125J	2 6 †	500	8 0u	50	100u§	200 §	1 8k	125J	2 0 †	TO83
79	NLF150M	720	110	89C	500m	150m	2 5	10m	125J	2.6 †	500	8 0u	50	100u§	200 §	1 6k	125J	2 0 †	TO94
80	NLF152M	720	110	89C	500m	150m	2 5	10m	125J	2 6 †	500	8 0u	50	100u§	200 §	1 6k	125J	2.0 †	TO83
81	C178M	720	200	64C	500m	300m	2.5	12m	125J	3 5 †	1.5k	8 0u	100	150u§	200 §	2 5k	125J	2 0 †	TO93
82	C181M	720	235	65C	500m	300m	2 5	12m	125J	3.5 †	1.5k	8 0u	100	75u§	200 §	2.5k	125J	2 0 †	TO93
83	C180M⧄	720	235	80C	500m	150m	2 5	6 0m	125J	2 9 †	1.5k	8 0u	100	75u§	200 §	3 5k	125J	2 0 †	TO93
84	SCR875	750 ⧄	16	25C	100m	75m	3.5	6 0m△	100C	3 0	50	3 0u§	10	30u§		150 §	100J	15	TO48
85#	40T9	750	65	75B	200m	200m	25	10m†		2 1 †	200					1.1k	125B	1 0	M308
86#	BTX68-700R	770 §	6 4	85B	10m§∅	30m	3.0	2 5m	125J	2 3	20	3 0u	10	20u		80	125J	5 †	S172
87#	BTX35/700R	770	12	25	10m∅	65m	3.5	4 5m	125	3.0	50	2 0u		15u			125J		TO48
88#	BTX36/700R	770	12	85B	10m∅	40m	3.0	4 5m	125	2.0	50	2.0u	50	15u		136 *	125J	5 †	TO48
89	C501N	800			250m	150m	6.5	15m	25J	1 5 †	1 0k†		450	200u§	100 §	7 0k	125J	5.0 †	M464
90#	TD8001J	800	600m	25A	40m∅	20m	3.0	1 0m	125J	2 0	1.0	1 5u§	500m	15u§	50 ∅§	12		60m	C16e
91#	CS0 6-08	800	650m		20m	10m	3 0			1 4	2.0			60u	200	35	125	10	
92#	CS1-08	800	1 0		50m	30m	3.0	1 0m	125	1 4	4 0			60u	100	55	125	10	
93#	TD8	800	1 0	25A	20m∅	10m	3 0	1 0m	125J	2 0	1 0	1 5u§	500m	20u§	50 ∅§	15		30m	C16e
94#	TD8001	800	1.0	25C	1 0m∅	2 5m	5 0	1 0m	100J	2 0	75	1 5u	.60	20u		12	100A	.01	TO5
95	B03406	800	1 0	80C	10m	10m	1 5	1 5m	100C	1 6		1 5u	2 0	25u	20 §	50 §		500m†	M506
96	B04306	800	1 0	80C	10m	10m	1 5	1 5m	100C	1 6		1.5u	2 0	25u	20 §	50 §		500m†	C16aa
97▼	S8001J	800	1 0	80C	10m	10m	1 5	1 0m	100C	1.6	7.0	1 5u	2 0	25u§	20 §	50 §	125A	500m†	M506
98▼	S8001M	800	1 0	80C	10m	10m	1 5	1 0m	100C	1.6	7 0	1.5u	2.0	25u§	20 §	50 §	125A	500m†	C16aa
99	SCR18A	800 ⧄	1 1	25C	20m	15m	2 0	900u△	125C	1 2 △	1.0	1 0u§	30	20u§		60 §	125J	5 0	A130
100	SCRF18A	800 ⧄	1 1	25C	50m	15m	2 0	900u△	125C	1.2 △	1 0	2.0u§	1 0	6 0u§		60 §	125J	5.0	A130
101	B03010	800	1 4	60C	6 0m	50u	1 0	100u	100C	1.6		1 5u	2.0	35u	4 0 §	50 §	125J	500m†	M506
102	B03011	800	1 4	60C	6.0m	200u	1 0	100u	100C	1.6		1 5u	2 0	30u	4 0 §	50 §	125J	500m†	M506
103	B03012	800	1.4	60C	6 0m	1.5m	1 0	100u	100C	1.6		1.5u	2 0	20u	10 §	50 §	125J	500m†	M506
104	B04010	800	1 4	60C	6 0m	50u	1 0	100u	100C	1.6		1.5u	2 0	35u	4.0 §	50 §	125J	500m†	C16aa
105	B04011	800	1 4	60C	6 0m	200u	1 0	100u	100C	1.6		1 5u	2.0	30u	4.0 §	50 §	125J	500m†	C16aa
106	B04012	800	1 4	60C	6 0m	1 5m	1 0	100u	100C	1 6		1 5u	2 0	20u	10 §	50 §	125J	500m†	C16aa
107	SCRFL80	800 ⧄	1 7	80C	50m	15m	2 0	900u	125C	1 2 △	1 0	2 0u§	1 0	12u§		60 §	125C	5 0	A130
108	SCRL80	800 ⧄	1 7	80C	20m	15m	2 0	900u△	125C	1 2 △	1 0	1.3u§	1 0	15u§		60 §	125C	5 0	A130

SYMBOLS AND CODES EXPLAINED IN INTERPRETER

6. SILICON CONTROLLED RECTIFIERS

IN ORDER OF (1) PEAK REV. VOLT., (2) MAX. CONT. CUR., (3) TEMPERATURE, (4) TYPE No.

LINE No	4 TYPE No	1 PRV and VBO (V)	MAX. CONT. CURRENT 2 Idc (A)	3 at TEMP (°C)	MAX. HOLD. CUR Ih @ 25°C (A)	MAX. GATE FIRING SPEC at 25°C Igf (A)	Vgf (V)	MAX SAT I Ir@PRV and Is@VBO (A)	at TEMP (°C)	MAX. FWD. VOLT. DROP at 25°C Vf (V)	@ If (A)	SWITCHING TIME at 25°C Ton (s)	for If (A)	Toff (s)	MIN. dV/dt @ 25°C (V/us)	ABS. MAX. RATINGS 1Cy PK SURGE I@25°C (A)	MAX TEMP (°C)	MAX GATE POWER (W)	DWG No.
1	B01413	800	1 9	80C	10m	10m	1 5	1 5m	100C	1 6		1.5u	2 0	25u	20 §	50 §		500m†	M507
2	B04313	800	1 9	80C	10m	10m	1 5	1 5m	100C	1.6		1.5u	2 0	25u	20 §	50 §		500m†	C16aa
3▼	S8003L	800	1 9	80C	10m	10m	1.5	1 0m	100C	1.6	12	1.5u	2.0	25u§	20 §	50 §	125A	500m†	M507
4▼	S8003M	800	1 9	80C	10m	10m	1 5	1.0m	100C	1 6	12	1.5u	2 0	25u§	20 §	50 §	125A	500m†	C16aa
5	JAN2N4204	800	2 0 △	85C	5.0m∅	50m	1 5	4.0m	100C	25 †	30		2 0	15u	250 §	100 §	100J	20 ∅	S17c
6	2N4204	800 △	2 0	90C	3 0m§	100m§	2 0 §	2.0m△	105C	1 5 †	2.0	.20u		20u	250	15 *	105A	20 ∅	S17a
7	MCR729-10	800 △	2 0 ∅	105J	15m∅	50m	1 5	2 0m△§	105J	1.5	2 0	.20u	30		50 §	100 *†	105J	20 ∅	S258
8#	TM8004	800	2 5	25A	30m∅	25m	3 0	3 0m	110J	2 0	8 0	2.0u§	1 0	60u§	50 ∅§	50		75m	S141d
9	B01030	800	2 7	60C	6.0m	50u	1 0	100u	100C	1.6		1.5u	2.0	35u	4.0 §	50 §	125J	500m†	M507
10	B01031	800	2 7	60C	6 0m	200u	1 0	100u	100C	1.6		1 5u	2 0	30u	4 0 §	50 §	125J	500m†	M507
11	B01032	800	2.7	60C	6.0m	1 5m	1 0	100u	100C	1 6		1 5u	2.0	20u	10 §	50 §	125J	500m†	M507
12	B04030	800	2 7	60C	6 0m	50u	1 0	100u	100C	1.6		1.5u	2.0	35u	4.0 §	50 §	125J	500m†	C16aa
13	B04031	800	2 7	60C	6 0m	200u	1 0	100u	100C	1.6		1.5u	2.0	30u	4.0 §	50 §	125J	500m†	C16aa
14	B04032	800	2.7	60C	6 0m	1 5m	1 0	100u	100C	1.6		1.5u	2 0	20u	10 §	50 §	125J	500m†	C16aa
15	B01420	800	3 8	80C	20m	15m	1.5	1.5m	100C	1.6		1.5u	2.0	25u	20 §	100 §		500m†	M507
16	B05420	800	3 8	80C	20m	15m	1 5	1 5m	100C	1.6		1 5u	2.0	25u	20 §	100 §		500m†	S307
17	B18037	800	3.8	80C	20m	15m	1 5	1.5m	100C	1.6		1.5u	2.0	25u	20 §	100 §		500m†	
18	B19037	800	3.8	80C	20m	15m	1 5	1.5m	100C	1.6		1.5u	2.0	25u	20 §	100 §		500m†	
19▼	S8006B	800	3 8	80C	20m	15m	1 5	1.0m	100C	1.6	24	1.5u	2.0	25u§	20 §	100 §	125A	500m†	S307
20▼	S8006G	800	3.8	80C	20m	15m	1 5	1.0m	100C	1.6	24	1 5u	2.0	25u§	20 §	100 §	125A	500m†	M605
21▼	S8006H	800	3 8	80C	20m	15m	1 5	1.0m	100C	1.6	24	1.5u	2.0	25u§	20 §	100 §	125A	500m†	S361
22▼	S8006L	800	3 8	80C	20m	15m	1 5	1.0m	100C	1 6	24	1.5u	2.0	25u§	20 §	100 §	125A	500m†	M507
23	SCR38A	800 ∅	4 0	80C	25m	15m	2 0	1 0m△	125C	2.0 △	3 0	1.0u∅	60			60 §	125J	5.0	S62
24	SCR380	800 ∅	4 0	80C	25m	10m	2 0	1.0m△	125C	2.0 △	3.0	1 3u§	1 0	15u§		60 §	150J	5.0	S62
25	SCRF38A	800 ∅	4 0	80C	50m	15m	2 0	1.0m△	125C	2.0 △	3.0	2 0u§	1 0	6.0u§		60 §	125J	5 0	S62
26#	TM8007	800	4 5	25A	40m∅	40m	3 0	3 0m	110J	2.0	15	2 0u§	6.0	50u§	50 ∅§	80		120m	S141d
27	B01427	800	5 4	80C	20m	15m	1 5	1.5m	100C	1.6		1 5u	2.0	25u	20 §	100 §		500m†	M507
28	B05427	800	5 4	80C	20m	15m	1.5	1.5m	100C	1.6		1.5u	2.0	25u	20 §	100 §		500m†	S307
29	B18047	800	5.4	80C	20m	15m	1 5	1.5m	100C	1 6		1 5u	2 0	25u	20 §	100 §		500m†	
30	B19047	800	5.4	80C	20m	15m	1 5	1 5m	100C	1.6		1 5u	2.0	25u	20 §	100 §		500m†	
31	B01057	800	5 5	60C	6 0m	200u	1.0	100u	100C	1.6		1.5u	2 0	30u	4 0 §	100 §	125J	500m†	M507
32	B01058	800	5 5	60C	6 0m	1 5m	1 0	100u	100C	1 6		1.5u	2.0	20u	10 §	100 §	125J	500m†	M507
33	B05007	800	5 5	60C	6 0m	200u	1 0	100u	100C	1.6		1 5u	2.0	30u	4 0 §	100 §	125J	500m†	S307
34	B05008	800	5 5	60C	6 0m	1 5m	1 0	100u	100C	1.6		1.5u	2 0	20u	10 §	100 §	125J	500m†	S307
35#	TM8010	800	6 0	25A	40m∅	40m	3 0	3.0m	110J	2.0	20	2 0u§	6.0	50u§	50 ∅§	100		120m	S141d
36#	TP8004	800	6.0	100C	100m	40m	3.0	3 0m		1.2	4 0	2.0u	4.0	30u	100 §∅	80	125C	.50	S18a
37#	CS5-08	800	6 2	100	50m	30m	3 0	3 0m	125	1 7	20			60u	200	110	125	10	
38	B01434	800	6 35	80C	20m	15m	1.5	1 5m	100C	1.6		1.5u	2.0	25u	20 §	100 §		500m†	M507
39	B05434	800	6 35	80C	20m	15m	1 5	1 5m	100C	1.6		1.5u	2.0	25u	20 §	100 §		500m†	S307
40	B18057	800	6.35	80C	20m	15m	1 5	1.5m	100C	1.6		1 5u	2 0	25u	20 §	100 §		500m†	
41	B19057	800	6.35	80C	20m	15m	1 5	1.5m	100C	1 6		1.5u	2.0	25u	20 §	100 §		500m†	
42▼	S8008B	800	6.35	80C	20m	15m	1 5	1.0m	100C	1.6	33	1.5u	2.0	25u§	20 §	100 §	125A	500m†	S307
43▼	S8008G	800	6.35	80C	20m	15m	1.5	1.0m	100C	1.6	33	1.5u	2.0	25u§	20 §	100 §	125A	500m†	M605
44▼	S8008H	800	6 35	80C	20m	15m	1.5	1.0m	100C	1.6	33	1 5u	2 0	25u§	20 §	100 §	125A	500m†	S361
45▼	S8008L	800	6 35	80C	20m	15m	1 5	1.0m	100C	1 6	33	1.5u	2.0	25u§	20 §	100 §	125A	500m†	M507
46▼	S8010B	800	6 35	80C	20m	15m	1.5	1.0m	100C	1 6	41	1.5u	2.0	25u§	20 §	100 §	125A	500m†	S307
47▼	S8010G	800	6 35	80C	20m	15m	1.5	1 0m	100C	1 6	41	1 5u	2.0	25u§	20 §	100 §	125A	500m†	M605
48▼	S8010H	800	6.35	80C	20m	15m	1 5	1 0m	100C	1.6	41	1 5u	2.0	25u§	20 §	100 §	125A	500m†	S361
49▼	S8010L	800	6 35	80C	20m	15m	1.5	1 0m	100C	1.6	41	1 5u	2.0	25u§	20 §	100 §	125A	500m†	M507
50#	BTY79-800R	800 §	6 4	85C	20	30m	3.0	2.5m	125	2 3		3.0u	10	20u		80	125	5.0 ∅	TO64
51	SCR58A	800 ∅	7.0	60C	25m	20m	2.0	1.0m△	125C	1.9 △	15	1.0u§	100	20u§		100 §	125J	10	S121
52	SCR580	800 ∅	7.0	60C	25m	15m	2.0	1.0m	125C	1.9 △	15	1.0u§	10	15u§		100 §	125J	10	S121
53	SCRF58A	800 ∅	7.0	60C	50m	20m	2 0	1 0m△	125C	1.9 △	15	2.0u§	10	6 0u§		100 §	125J	10	S121
54	SCRF580	800 ∅	7.0	60C	50m	25m	2.0	1.0m	125C	1.9 △	15	2.0u§		10u	12 §	100 §	125J	10	S121
55	SCR580A	800 ∅	7 0	110C	25m	15m	2.0	1 0m△	150C	1.9 △	15	1.0u§	10	15u§		100 §	150J	10	S121
56#	TAG7-800	800	7.5	70C	25m	25m	2.0	1.5m	105	1 7	10					100	105	500m†	TO48
57#	TAG7S800	800	7 5	70C	25m	25m	2.0	1 5m	105	1.7	10			12u		100	105	500m†	TO48
58#	BTX31-800	800	7.5	85	15m	15m	3.0	1.5m	125	1.7	10					100	125	5.0	TO48
59#	BTX31S800	800	7 5	85	15m	15m	3.0	1.5m	125	1 7	10			12u		100	125	5.0	TO48
60#	BTX71-800	800	7.5	85	40m	40m	3 0	1.5m	125	1.7	10	1 4u	5.0	20u	100	100	125	5.0	TO48
61#	BTX71S800	800	7.5	85	40m	40m	3 0	1.5m	125	1.7	10	1.4u	5 0	12u	100	100	125	5.0	TO48
62	2N3761	800	7 5	100	200m	200m	2.3	2.5m	120A				10	75u	200	250 *	120A	2.0	TO48
63	B01077	800	7.8	60C	6.0m	200u	1 0	100u	100C	1 6		1.5u	2 0	30u	4.0 §	100 §	125J	500m†	M507
64	B01078	800	7.8	60C	6.0m	1.5m	1 0	100u	100C	1 6		1.5u	2.0	20u	10 §	100 §	125J	500m†	M507
65	B05027	800	7.8	60C	6.0m	200u	1.0	100u	100C	1.6		1.5u	2.0	30u	4.0 §	100 §	125J	500m†	S307
66	B05028	800	7.8	60C	6 0m	1.5m	1.0	100u	100C	1 6		1.5u	2 0	20u	10 §	100 §	125J	500m†	S307
67#	CS8-08	800	8 2	100	50m	30m	3.0	3.0m	125	1.6	26			60u	200	170	125	10	
68#	TP8006	800	9.0	100C	100m	40m	3.0	3.0m		1.2	6.0	2.0u	6 0	30u	100 §∅	100	125C	.50	S18a
69	B01097	800	9.1	60C	6.0m	200u	1.0	100u	100C	1.6		1.5u	2.0	30u	4.0 §	100 §	125J	500m†	M507
70	B01098	800	9.1	60C	6.0m	1.5m	1.0	100u	100C	1.6		1.5u	2.0	20u	10 §	100 §	125J	500m†	M507
71	B05047	800	9.1	60C	6.0m	200u	1.0	100u	100C	1.6		1.5u	2 0	30u	4.0 §	100 §	125J	500m†	S307
72	B05048	800	9.1	60C	6.0m	1.5m	1.0	100u	100C	1.6		1.5u	2.0	20u	10 §	100 §	125J	500m†	S307
73#	TR8010	800	10	25A	50m∅	80m	3.0	5.0m	125J	2.2	30	2.0u§	10	50u§	50 ∅§	125		240m	S313
74#	CR10B16	800	10	59C		30m	2 5	3.0m	100J	1.6	30					150 △	100J	5 0 ∅	S334
75#	2SF452	800	10	63C	10m∅	30m	2 5	3.0m∅	100J	1.2	10					90	100J	5 ∅	S141b
76	10RC80	800	10	65C	10m∅	15m	2.0	2 0m	105J	2.3	10	3.0u	10		20	125	105J	.5 †	TO48
77#	CR6-903RB	800	10	70C	28m∅	80m	3 0	5.0m†	100C	2.0	16	2.3u	20	80u	20	100	125	5.0	
78#	CR6-903RBA	800	10	70C	28m∅	80m	3 0	5.0m†	100C	2.0	16	2.3u	20	80u	200	100	125	5.0	
79#	TAG10-800	800	10	70	25m	25m	3 0	1.5m	105	2.0	15					120	105	5.0	TO48
80#	TAG10S800	800	10	70	25m	25m	3.0	1.5m	105	2.0	15			12u		120	105	5.0	TO48
81	B01441	800	10	80C	20m	20m	1 5	1.5m	100C	1.6		1 5u	2 0	25u	20 §	150 §		600m†	M507
82	B05441	800	10	80C	20m	20m	1.5	1 5m	100C	1.6		1.5u	2 0	25u	20 §	150 §		600m†	S307
83	B18067	800	10	80C	20m	20m	1 5	1.5m	100C	1.6		1.5u	2.0	25u	20 §	150 §		600m†	
84	B19067	800	10	80C	20m	20m	1 5	1.5m	100C	1.6		1.5u	2.0	25u	20 §	150 §		600m†	
85▼	S8016B	800	10	80C	20m	20m	1.5	1.0m	100C	1.6	64	1.5u	2.0	25u§	20 §	150 §	125A	600m†	S307
86▼	S8016G	800	10	80C	20m	20m	1.5	1.0m	100C	1.6	64	1.5u	2.0	25u§	20 §	150 §	125A	600m†	M605
87▼	S8016H	800	10	80C	20m	20m	1.5	1.0m	100C	1.6	64	1.5u	2.0	25u§	20 §	150 §	125A	600m†	S361
88▼	S8016L	800	10	80C	20m	20m	1.5	1.0m	100C	1.6	64	1.5u	2.0	25u§	20 §	150 §	125A	600m†	M507
89▼#	CR10C16	800	10	84C		30m	2 5	3.0m	125J	1.6	30				20 △	150 △	125J	5.0 ∅	S350
90#	BTX32-800	800	10	85	25m	25m	3.0	1.5m	125	2.0	15					120	125	5.0	TO48
91#	BTX32S800	800	10	85	25m	25m	3.0	1.5m	125	2.0	15			12u		120	125	5.0	TO48
92#	BTX72-800	800	10	85	40m	40m	3.0	1.5m	125	2.0	15	1.4u	5.0	20u	100	120	125	5.0	TO48
93#	BTX72S800	800	10	85	40m	40m	3.0	1.5m	125	2.0	15	1.4u	5.0	12u	100	120	125	5.0	TO48
94#	2SF717	800	11	50B		40m	3.0	4.5m	100J	2.8	50					125	100J	500m	S18c
95#	CR12-903RB	800	14.5	75C	28m∅	60m	3.0	5 0m†	125C	2.0	32	2.3u	20	85u	20	160	125	5.0	
96#	CR12-903RBA	800	14.5	75C	28m∅	60m	3.0	5.0m†	125C	2.0	32	2.3u	20	85u	200	160	125	5 0	
97#	BTY87/800R	800	15	61A	10m∅§	65m	3.5	4.0m	125J	3.0	50	3.0u§	10	15u	100	106	125J	50	TO48
98#	TAG15-800	800	15	70	50m	50m	3.0	1.5m	105	2.0	20					150	105	5.0	TO48
99#	TAG15S800	800	15	70	50m	50m	3 0	5.0m	105	2.0	20			12u		150	105	5.0	TO48
100#	BTX70-800	800	15	85	50m	50m	3.0	1 5m	125	2.0	20					150	125	5.0	TO48
101#	BTX70S800	800	15	85	50m	50m	3.0	1 5m	125	2.0	20			12u		150	125	5.0	TO48
102#	BTX74-800	800	15	85	50m	50m	3.0	1.5m	125	2.0	20	1.4u	10	20u	100	150	125	5.0	TO48
103#	BTX74S800	800	15	85	50m	50m	3.0	1.5m	125	2.0	20	1 4u	10	12u	100	150	125	5.0	TO48
104	B15007	800	15.8	80C	25m	25m	2.0	1 5m	100C	1.6		1.8u	2 0	25u	20 §	200 §		800m†	M505
105	B16007	800	15.8	80C	25m	25m	2.0	1.5m	100C	1.6		1.8u	2.0	25u	20 §	200 §		800m†	M504
106	B17007	800	15.8	80C	25m	25m	2 0	1 5m	100C	1.6		1.8u	2.0	25u	20 §	200 §		800m†	S308
107	B18007	800	15.8	80C	25m	25m	2.0	1 5m	100C	1.6		1.8u	2.0	25u	20 §	200 §		800m†	
108	B19007	800	15.8	80C	25m	25m	2 0	1.5m	100C	1.6		1.8u	2.0	25u	20 §	200 §		800m†	
109▼	S8025	800	15.8	80C	25m	25m	2 0	1.0m	100C	1.6	100	1.8u	2 0	25u§	20 §	225 §	125A	800m†	M606
110▼	S8025C	800	15.8	80C	25m	25m	2 0	1 0m	100C	1.6	100	1.8u	2.0	25u§	20 §	225 §	125A	800m†	M607

SYMBOLS AND CODES EXPLAINED IN INTERPRETER

6. SILICON CONTROLLED RECTIFIERS

IN ORDER OF (1) PEAK REV. VOLT., (2) MAX. CONT. CUR., (3) TEMPERATURE, (4) TYPE No.

LINE No.	4 TYPE No.	1 PRV and VBO (V)	MAX. CONT. CURRENT 2 Idc (A)	3 at TEMP (°C)	MAX. HOLD. CUR Ih @ 25°C (A)	MAX. GATE FIRING SPEC at 25°C Igf (A)	Vgf (V)	MAX SAT Ir@PRV and Is@VBO (A)	at TEMP (°C)	MAX. FWD. VOLT. DROP at 25°C Vf (V)	@ If (A)	SWITCHING TIME at 25°C Ton (s)	for If (A)	Toff (s)	MIN. dV/dt @ 25°C (V/us)	ABS. MAX. RATINGS 1Cy PK SURGE I@25°C (A)	MAX TEMP (°C)	MAX GATE POWER (W)	DWG. No.
1▼	S8025D	800	15 8	80C	25m	25m	2.0	1.0m	100C	1.6	100	1.8u	2.0	25u§	20 §	225 §	125A	800m†	S362
2▼	S8025G	800	15.8	80C	25m	25m	2.0	1.0m	100C	1.6	100	1.8u	2 0	25u§	20 §	225 §	125A	800m†	M605
3▼	S8025H	800	15.8	80C	25m	25m	2.0	1.0m	100C	1.6	100	1.8u	2.0	25u§	20 §	225 §	125A	800m†	S361
4	C36S△	800	16	25B		80m	3 5	2.0mØ	100J	1.3 Ø	10					125	100J	5.0	TO48
5	SCR880	800 ☑	16	25C	100m	75m	3 5	6.0m△	100C	3.0	50	3.0u	10	30u§		150 §	100J	15	TO48
6#	TR8	800	16	25A	50mØ	80m	3.0	3.0m	125J	2.0	50	2.0u§	10	50u§	50 Ø	250		240m	S313
7#	SF10L11	800	16	26S	100m	80m	3 5	4.0m	100J	3.0	50					125	100J	500m	S18
8	202S	800	16	58C	10m§Ø	80m	3.5	3.0m	100J	1.6	10					125	100J	.50	TO48
9♦#	BStC0353	800	16	59C	30m	30m	2 5	3.0	125J	1.9	27				200	180 §	125	10	
10	2N692	800	16	65C		80m§	3.0 §	2.0m	65C	2 0 †	16						125C	.5 †	TO48
11	JAN2N692	800	16 △	65C	50m	80m	3.0	2.0m	25	2.0 †	50	5.0u	10	40u		150	125A	.5 †	TO48
12	511-3	800	16	70C		80m	3 0								200		100J		TO48
13#	BTY91/800R	800	16	75B	10mØ§	40m	3 0	4 0m	125J	2.0	50	3.0u§	10	20u§	100	136	125J	5.0	TO48
14#	11RC80	800	16 △	85B	20m	40m	3.0	2 0m		2.3	10	3.0u	10	25u	20	125	125A	5.0 Ø	S141c
15♦#	BStD0353	800	16	85C	30m	30m	2.5	3.0	125J	1.6	33				200	250 §	125	10	
16#	BTX92-800R	800 §	16	85C	200m	150m	3.5	10m	125	2.7	50	2.0u	10		200	280 *	125	5 0 Ø	TO48
17	203S	800	16	92C	8m§Ø	80m	3 7	3.0m	100J	1.6	10					125	100J	.50	TO48
18	16C80	800	16	125J	50m	15m	2.0	10m	125J	2.0	50	7.0u	16	75u§		150	125J	5.0 Ø	TO48#△
19	16C80B	800	16	125J	50m	40m	2.0	10m	125J	2.0	50	7.0u	16	75u§	25	150	125J	5.0 Ø	TO48#△
20	16C80C	800	16	125J	50m	40m	2 0	10m	125J	2.0	50	7.0u	16	75u§		150	125J	5.0 Ø	TO48#△
21#	T14F800C	800	17	85C	120m	50m	3.0	10m	125J	2.5	50	1.5u☑	10	15u§	200 §	200 §	125J		S63g%
22#	T14F800E	800	17	85C	120m	50m	3 0	10m	125J	2.5	50	1.5u☑	10	15u§	200 §	200 §	125J		M329%
23#	T15N800C	800	19	85C	200m	100m	3.0	10m	125J	2.5	50	2.5u☑	10	80u§	20 §	300 §	125J		S63g%
24#	T15N800E	800	19	85C	200m	100m	3 0	10m	125J	2.5	50	2 5u☑	10	80u§	20 §	300 §	125J		M351%
25#	CS16-08	800	19	95	50m	80m	3 0	3.0m	125	1 8	60			60u	200	350	125	10	
26▼#	CR20A16	800	20	57C		50m	3 0	3.0m	100J	1 8	60					300 △	100J	5.0 Ø	S106b
27#	2SF458	800	20	58C	10mØ	50m	3 5	3 0mØ	100	1.3	20					300	100J	5 Ø	S106b
28#	TAG20-800	800	20	60	50m	50m	3.0	1.5m	105	1.7	30					175	105	5.0	TO48
29#	TAG20S800	800	20	60	50m	50m	3.0	1.5m	105	1.7	30			12u		175	105	5.0	TO48
30#	BTX33-800	800	20	70	50m	50m	3.0	1 5m	125	1.7	30					175	125	5.0	TO48
31#	BTX33S800	800	20	70	50m	50m	3 0	1 5m	125	1.7	30			12u		175	125	5.0	TO48
32▼	C138N10M	800	20	70	150m	180	3.0	4.0m	125	4.0	100		10	10	200	200	125	40	TO48
33▼	C138N20M	800	20	70	150m	180	3.0	4.0m	125	4.0	100		10	20	200	200	125	40	TO48
34▼	C139N10M	800	20	70	150m	180	3.0	4.0m	125	4 0	100		10	10	200	200	125	40	TO48
35▼	C139N20M	800	20	70	150m	180	3 0	4 0m	125	4.0	100		10	10	200	200	125	40	TO48
36#	CR20EY16	800	20	74C		50m	3.0	6 0m	125J	2.5	60		20	15u☑	100 △	300 △	125J	5.0 Ø	S106b
37#	BTX81-800R	800	20	85B	100m	80m	3.5			1.8	50						125J	1.0 †	S94a
38#	CR20F16	800	20	86C		50m	3.0	4 0m	125J	1.8	60				50 △	300 △	125J	5.0 Ø	S106b
39	2N5205	800	22	40A	20 §	80m§	3.0 §	2.5m	125A	2.3	70				100 §	300	125A	.50 †	TO48
40#	2SF727	800	22	64B		40m	3 0	4.5m	125J	2 0	50				100	150	125J	500m	S18c
41	B15027	800	22	80C	40m	25m	2.0	1 5m	100C	1 6		1.8u	2.0	25u	20 §	300 §		800m†	M505
42	B16027	800	22	80C	40m	25m	2.0	1.5m	100C	1.6		1 8u	2.0	25u	20 §	300 §		800m†	M504
43	B17027	800	22	80C	40m	25m	2.0	1 5m	100C	1.6		1 8u	2.0	25u	20 §	300 §		800m†	S308
44	B18027	800	22	80C	40m	25m	2.0	1 5m	100C	1.6		1 8u	2.0	25u	20 §	300 §		800m†	
45	B19027	800	22	80C	40m	25m	2 0	1 5m	100C	1.6		1.8u	2.0	25u	20 §	300 §		800m†	
46▼	S8035	800	22	80C	40m	25m	2.0	1.0m	100C	1.6	141	1.8u	2.0	25u§	20 §	325 §	125A	800m†	M606
47▼	S8035C	800	22	80C	40m	25m	2.0	1.0m	100C	1.6	141	1.8u	2 0	25u§	20 §	325 §	125A	800m†	M607
48▼	S8035D	800	22	80C	40m	25m	2.0	1 0m	100C	1.6	141	1.8u	2.0	25u§	20 §	325 §	125A	800m†	S362
49▼	S8035G	800	22	80C	40m	25m	2.0	1 0m	100C	1 6	141	1.8u	2 0	25u§	20 §	325 §	125A	800m†	M605
50▼	S8035H	800	22	80C	40m	25m	2 0	1 0m	100C	1.6	141	1.8u	2.0	25u§	20 §	325 §	125A	800m†	S361
51#	TS835	800	22 5	25A	20mØ	80m	3.0	6.0m	125J	2.2	70	5.0u§	15	50u§	50 Ø§	250		240m	S313
52#	CR18-903RB	800	23	70C	28mØ	40m	3.0	5.0m†	125C	2 1	57	2.3u	20	85u	20	180	125	5.0	
53#	CR18-903RBA	800	23	70C	28mØ	40m	3 0	5.0m†	125C	2 1	57	2.3u	20	85u	200	180	125	5.0	
54#	CR18903RB	800	23	75C	78m	40m	3 0	5.0m	125C	2.1	57				20 Ø§	180 *§	125J	5 Ø	S278
55#	T18F800C	800	23	85C	120m	50m	3.0	10m	125J	2.3	60	1.5u☑	15	20u§	50 §	300 §	125J		S63g%
56#	T18F800E	800	23	85C	120m	50m	3.0	10m	125J	2.3	60	1.5u☑	15	20u§	50 §	300 §	125J		M353%
57	C37N△	800	25 △	25C		80m	3.5	4.0m	105	2.3 †	30					125	105C	.50	TO48
58	10RC80A	800 ☑	25 △	45C	10mØ	90m	2 5	2.0mØ	125C	2 8	50 †	3.0u	10	30u	25 §	200 △	125J	.50 †	TO48
59	10RCF80A	800 ☑	25 △	45C	10mØ	90m	25	2 0mØ	125C	2 8	50 †	3 0u	10	12u§	25 §	200 △	125J	500m†	TO48
60#	SF16L11	800	25	57C		40m	3.0	8.0m	125J	1.9	50					135	125J	500m†	S18
61#	2N692A	800	25	60C	50m	40m	3.0	5 0m	125J	2 0 △	50	1.4u	10	20u	100	150	125	5 Ø	TO48
62#	2N692AS	800	25	60	50m	40m	3 0	1.5m	125	1 7	30	1.4u	10	12u		200	125	5.0	TO48
63#	2N692S	800	25	60	50m	40m	3.0	1.5m	125	1.7	30	1.4u	10	12u	25	200	125	5.0	TO48
64	201S	800	25	60C	8m§Ø	40m	3.0	3.0m	125J	2 0	50					150	125J		TO48
65#	BTX73-800	800	25	60	50m	50m	3 0	1.5m	125	1.7	30	1 4u	10	20u	100	200	125	5.0	TO48
66#	BTX73S800	800	25	60	50m	50m	3 0	1.5m	125	1.7	30	1.4u	10	12u	100	200	125	5.0	TO48
67#	21RC80	800	25 △	75B	20m	40m	3.0	1.5		2.2	16	3.0u	10	25u	20	150	125A	5 0 Ø	S141c
68#	CS22-08	800	25	75	200m	100m	3 0	10m	125	2.1	70			80u	200	400	125	75	
69#	24TB8	800	25	84B		.10	3 0	7.5m		2 3	31					180	125	1.0	S266
70#	26TB8	800	25	84B		10	3 0	7.5m		2 3	31					180	125	1.0	S63a
71#	BTX82-800R	800	26	87B	10	80m	3 5					5.0u		50u		550 *	125J	5 0 Ø	TO48
72#	T22N800C	800	28	85C	200m	100m	3.0	10m	125J	1 9	60	2.5u☑	20	80u§	20 §	400 §	125J		S63g%
73#	T22N800E	800	28	85C	200m	100m	3.0	10m	125J	1.9	60	2.5u☑	20	80u§	20 §	400 §	125J		M353%
74#	CR30-08	800	30	50	20	2.0	10		125	1 8	100	4.5u	30	25u	20	350	125	5.0	S314
75#	23TB8	800	31	82B	150m	100m	3 0	7.5m		2.4	63					260	125C	1.0	S266
76#	25TB8	800	31	82B	150m	100m	3.0	7 5m		2.4	63					260	125C	1.0	S63a
77	C137N	800	35 △	18C	.10	40m	3 0 §	3.5m	120C	2.3	70				100	360	120J	2.0 †	TO48
78	SCR168A	800 ☑	35	25C	50m	25m	2 0	2.0m△	125C	2.0	50	1.0u§	200	20u§		200 §	125J	15	TO48
79	SCR1680A	800 ☑	35	25C	50m	40m	3.0	2.0m△	125C	2.0	50	1.5u§	10	20u§		250 §	125J	15	TO48
80	SCRF168A	800 ☑	35	25C	100m	25m	2 0	2.0m△	125C	2.0	50	20u§	10	6.0u§		200 §	125J	15	TO48
81	SCRF1680	800 ☑	35	25C	100m	40m	3 0	2.0m△	125C	2.0	50	2.0u§	10	12u§		200 §	125J	15	TO48
82	16RC80A	800 ☑	35 △	35C	20mØ	40m	2 0	2.0mØ	125C	2 3	70 †		10	75u§	10 §	250 △	125J	.50 †	TO48
83	18RC80	800 ☑	35 △	45C	20mØ	40m	2 0	2.0mØ	125C	2 0	70 †					350 △	125J	.50 †	TO48
84▼	C144N15M	800	35 △	63	125	150	3 0	4.0	125	3.0	100		10	15	200	250	125	40	TO48
85▼	C144N30M	800	35 △	63	125	150	3.0	4.0	125	3.0	100		10	30	200	250	125	40	TO48
86#	TK8FA	800	35	85C		300m	3 0	10m	125J	2.0	100	3.0u§	100	20u§	100 §	700		900m	S317
87#	TK8FB	800	35	85C		300m	3 0	10m	125J	2.0	100	3.0u§	100	40u§	100 §	700		900m	S317
88▼#	5TCA80	800	35	125	60	100m	3 0							100u	100 §	1.5k	125	10	
89	35C80☑	800	35	125J	200u§	200u	3 0	10m	125J	2.5	220	10u	35	40u§		900	125J	15 Ø	TO94#△
90	35C80B	800	35	125J	200u§	200u	3 0	10m	125J	2.5	220	10u	35	40u§	100	900	125J	15 Ø	TO94#△
91	35C80BF	800	35	125J	200u§	200u	3 0	10m	125J	2.5	220	10u	35	40u§	100	900	125J	15 Ø	TO83#△
92	35C80F	800	35	125J	200u§	200u	3 0	10m	125J	2 5	220	10u	35	40u§		900	125J	15 Ø	TO83#△
93#	CR30-803A	800	36	25	66m	60m	3.0			1.4	30	20u	30	73u		500	125	5.0	TO49
94#	CR30-904AA	800	38	70C	20mØ	80m	3 0	10m†	125C	2.5	100	20u	100	20u☑	20	660	125	5.0 Ø	TO49
95▼#	6TC80	800	40			100m	3 0			1 3		10u		150u	50 §Ø	1.5k*	125J		S183a
96#	2SF737	800	40	70B		40m	3.0	7 0m	125J	1 7	50				100	300	125J	500m	S18c
97#	BStF0455	800	40	70C	180m	100m	2 0	5 0m	110J	1.5	40			20u§	50 §	360	110J	20	S18f
98#	27TB8	800	40	74B		10	3 0	15m		2 1	78					450	125C	1.0	S63a
99#	CR24-903RB	800	40	80C	28mØ	40m	3 0	5 0m†	125C	1.4	50	2.3u	20	85u	20	320	125	5 0	
100#	CR24-903RBA	800	40	80C	28mØ	40m	3 0	5.0m†	125C	1 4	50	2 3u	20	85u	200	320	125	5 0	
101#	T30F800C	800	40	85C	300m	100m	3 0	10m	125J	1 8	100	2.0u☑	25	25u§	50 §	800 §	125J		S63g%
102#	T30F800E	800	40	85C	300m	100m	3 0	10m	125J	1 8	100	2.0u☑	25	25u§	50 §	800 §	125J		M351%
103♦	40RCS80	800 ☑	40	87C	200m	110m	3 0	1 5m	105J	1 7 †	40	4.5u	10		25 §	1.0k§	105J	500m†	TO65
104▼#	6TCA80	800	40	125	60	100m	3 0							100u	100 §	1 5k	125	10	
105	251S	800	40	125J		100m	3 0	10m	125J	1 7	50	4.0u	50	100u	300	1.2k*	125J	3 †	Z59
106▼#	SKT45-08AT	800	45	85C	130m	100m	3 0			1 8	50			20u☑	50 §Ø	800	130A	300m	S354
107▼#	SKT45-08BS	800	45	85C	130m	100m	3 0			1 8	50			15u☑	50 §	800	130A	300m	S354
108▼#	SKT45-08BT	800	45	85C	130m	100m	3 0			1.8	50			20u☑	50 §	800	130A	300m	S354
109▼#	SKT45-08CS	800	45	85C	130m	100m	3 0			1 8	50			15u☑	200 §	800	130A	300m	S354
110▼#	SKT45-08CT	800	45	85C	130m	100m	3 0			1 8	50			20u☑	200 §	800	130A	300m	S354

SYMBOLS AND CODES EXPLAINED IN INTERPRETER

6. SILICON CONTROLLED RECTIFIERS

IN ORDER OF (1) PEAK REV. VOLT., (2) MAX. CONT. CUR., (3) TEMPERATURE, (4) TYPE No.

LINE No.	4 TYPE No.	1 PRV and VBO (V)	MAX. CONT CURRENT 2 Idc (A)	3 at TEMP (°C)	MAX. HOLD. CUR Ih @ 25°C (A)	MAX. GATE FIRING SPEC at 25°C Igf (A)	Vgf (V)	MAX SAT I Ir@PRV and Is@VBO (A)	at TEMP (°C)	MAX. FWD. VOLT. DROP at 25°C Vf (V)	@ If (A)	SWITCHING TIME at 25°C Ton (s)	for If (A)	Toff (s)	MIN. dV/dt @ 25°C (V/us)	ABS. MAX. RATINGS 1Cy PK SURGE I@25°C (A)	MAX TEMP (°C)	MAX GATE POWER (W)	DWG. No.
1▼#	SKT45-08DS	800	45	85C	130m	100m	3 0			1 8	50			15u☑	500 §	800	130A	300m	S354
2▼#	SKT45-08DT	800	45	85C	130m	100m	3 0			1 8	50			20u☑	500 §	800	130A	300m	S354
3▼#	SKT45-08ET	800	45	85C	130m	100m	3.0			1.8	50			20u☑	1.0k§	800	130A	300m	S354
4▼#	T130N800	800	45	85C	200m	150m	1 4	30m	125J	1 8	500	7 5u	100	60u	50	3.5k§	125J		M330d
5	NLE45N	800	45	89C	10	70m	2 5	4.0m	125J	3 0	500	5.0u	50	30u	100	1.2k	125J	.50 †	TO83
6	NLE46N	800	45	89C	.10	70m	2 5	4 0m	125J	3 0	500	5.0u	50	30u	100	1 2k	125J	.50 †	TO94
7▼#	SKT46-08A	800	45	105C	130m	100m	3.0			1 8	50			50u	50 §∅	800	150A	300m	S354
8▼#	SKT46-08B	800	45	105C	130m	100m	3 0			1.8	50			50u	50 §	800	150A	300m	S354
9▼#	SKT46-08C	800	45	105C	130m	100m	3 0			1 8	50			50u	200 §	800	150A	300m	S354
10▼#	SKT46-08D	800	45	105C	130m	100m	3 0			1.8	50			50u	500 §	800	150A	300m	S354
11▼#	SKT46-08E	800	45	105C	130m	100m	3 0			1.8	50			50u	1.0k§	800	150A	300m	S354
12#	28TB8	800	47	73B		10	3 0	15m		1.9	95					550	125	1.0	S63a
13#	CR50-08	800	50	50	20	2 0	10		125	1 8	150	4.5u	50	25u	20	650	125	5.0	S142a
14#	2SF1130	800	50	65		100m	3 0	10m	125J	2 3	300		30	30	100	700	125J	500m	S331
15#	BTY95/800R	800	50	75B	10m∅§	80m	3.0	10m	125J	3 3	500	3.0u	50	20u	10	680	125J	5 0	TO49
16	C146N	800	55 △			100m	3 0							40u☑			125A		S236
17#	TK8	800	55	60C	100m	125m	3 0	10m		2 0	100	5 0u	50	30u	20 ∅	700	100C	50	TO49
18#	29TB8	800	55	68B		10	3 0	15m		1.8	110					650	125	1 0	S63a
19	NL576N	800	55	82	500m	150m	3 0			2.4	110				10	700	125	2.0	
20	NL577N	800	55	82C	50	15	3 0	6 0m	125J	2 4	110				200	700	125J	2 0 †	TO103
21	C45N△	800	55 △	85C	100m	75m	3.0	4.0m	120C	3.0	500	5.0u	50	30u§	15 §	700	125J	500m	S315
22	C46N△	800	55 △	85C	100m	75m	3 0	4 0m	120C	3.0	500	5.0u	50	30u§	15 §	700	125J	500m	TO94
23	2191S	800	55	94C		200m	3 0	10m	125J	2.0 §	50	3 5u	50	15u	100	1.2k*	125J	3 †	Z59
24	2192S	800	55	94C		200m	3 0	10m	125J	2 0 §	50	8.0u	50	20u	100	1.2k*	125J	3 †	Z59
25	555N	800	55	99C		150m	3 0								200		125J		TO49
26	556N	800	55	99C		150m	3 0								200		125J		TO83
27#	2SF707	800	55	100C		100m	3 5	10m	100J	2 7	500					700	100J	.5 †	S104a
28#	5TC80	800	55	125	20m	45m	3 0			1 3	50	5.0u	50	25u		500	100J	20	S185
29	C145N	800	55 △	125J	500m	150m	3 0	9.0m	125C	2 4 †	110				200	700 △	125J	2 †	TO103
30#	BTX49-800R	800 §	60	85C	150m	80m	3.0	18m	125J	3 5	500	5.0u	50	50u		1.0k	125J	1 0 †	TO94
31#	T50F800	800	62.5	85C	300m	100m	3.0	20m	125J	2 2	160	2.0u☑	25	30u§	50 §	800 §	125J		M330b%
32#	T50N800	800	62 5	85C	300m	100m	3.0	20m	125J	2.2	160	2.5u☑	25	80u§	20 §	800 §	125J		M330b%
33	2515S	800	63	120C		10	3.0	15m	150J	1.7	50				300	1.2k	150J		TO83
34#	CR50-803A	800	64	25	73m	100m	3 0									600	125	5.0	TO49
35#	40T10	800	65	75B	200m	200m	25	10m†		2 1 †	200					1 1k	125B	1.0	M308
36#	TK180	800	70	25A	50m∅	125m	3.0	10m	125J	2 0	200	5 0u§	100	100u§	50 §	1.0k		375m	S317
37	2N3093	800	70 △	62C		200m$	3.0 $	2.5m	62C	1.9 †	70				20	1.0k§*	125C	.50 †	TO49
38	2N3101	800	70 △	62C		200m$	3 0 $	2.5m	62C	1.9 †	70				20	1.0k§*	125C	500m†	TO49
39	2N1802	800	70 △	65C		130m$	3 0 $	3.0m	65C	1.8 †	70					1.0k*	125C	.50 †	TO83
40	2N3989	800	70	70C		200m$	3 0 $	15m	125C	2.9 †	220			50u	200 §	1 0k*	125C	10 ∅	TO94
41#	CR70B16	800	70	74C		70m	3 0	6.0m	125J	1.7	220				10 △	1.5k△	125J	5.0 ∅	S189d
42#	36TB8	800	70	75B		15	3 0	15m		2.0	140					760	125	1.0	S63d
43	2N4365	800	70	82C	200m	250m$	5 0 $	10m	125C	2 0 †	70				100	1.6k*§	125C	15 ∅	TO94
44	2N4375	800	70	82C	200m	250m$	5.0 $	10m	125C	2.0 †	70				100	1 6k*§	125C	15 ∅	TO83
45#	CR70C16	800	70	83C		100m	3 0	15m	125J	1.8	220 §				100 △	1.5k△	125J	5.0 ∅	S332
46#	CR70CX16	800	70	83C		100m	3 0	15m	125J	1 8 †	220			30 §	100 §	1.5k	125J	5.0 ∅	S237f
47#	BTX50-800R	800 §	70	85C	150m	80m	3 0	18m	125J	2.5	500	5.0u	50	50u		1 5k	125J	1.0 †	TO94
48#	BTY99/800R	800	70	85B	10m∅§	70m	3 0	10m	125J	2.5	500	3 0u	50	20u	10	900	125J	5.0	TO49
49▼#	SKT70-08AU	800	70	85C	150m	150m	3 0			1 8	60			25u☑	50 §∅	1.7k	130A	500m	S260c
50▼#	SKT70-08BT	800	70	85C	150m	150m	3 0			1 8	60			20u☑	50 §	1.7k	130A	500m	S260c
51▼#	SKT70-08BU	800	70	85C	150m	150m	3.0			1.8	60			25u☑	50 §	1.7k	130A	500m	S260c
52▼#	SKT70-08CT	800	70	85C	150m	150m	3 0			1.8	60			20u☑	200 §	1.7k	130A	500m	S260c
53▼#	SKT70-08CU	800	70	85C	150m	150m	3.0			1.8	60			25u☑	200 §	1 7k	130A	500m	S260c
54▼#	SKT70-08DT	800	70	85C	150m	150m	3.0			1.8	60			20u☑	500 §	1.7k	130A	500m	S260c
55▼#	SKT70-08DU	800	70	85C	150m	150m	3 0			1.8	60			25u☑	500 §	1 7k	130A	500m	S260c
56▼#	SKT70-08EU	800	70	85C	150m	150m	3 0			1.8	60			25u☑	1.0k§	1.7k	130A	500m	S260c
57#	TK180FA	800	70	85C		300m	3.0	10m	125J	2.0	200	3.0u§	100	20u§	100 §	1.0k		900m	S317
58#	TK180FB	800	70	85C		300m	3.0	10m	125J	2 0	200	3 0u§	100	40u§	100 §	1.0k		900m	S317
59▼#	SKT71-08A	800	70	105C	150m	150m	3 0			1.8	60			70u	50 §∅	1 7k	150A	500m	S260c
60▼#	SKT71-08B	800	70	105C	150m	150m	3.0			1.8	60			70u	50 §	1.7k	150A	500m	S260c
61▼#	SKT71-08C	800	70	105C	150m	150m	3 0			1.8	60			70u	200 §	1.7k	150A	500m	S260c
62▼#	SKT71-08D	800	70	105C	150m	150m	3 0			1.8	60			70u	500 §	1.7k	150A	500m	S260c
63▼#	SKT71-08E	800	70	105C	150m	150m	3.0			1.8	60			70u	1 0k§	1 7k	150A	500m	S260c
64▼#	10TCA80	800	70	125	100	100m	3 0							100u	100 §	1 5k	125	10	
65	70C80	800	70	125J	200m§	200m	3 0	10m	125J	1 8	220	10u	70	40u§		1 6k	125J	15 ∅	TO94#△
66	70C80C	800	70	125J	200m§	100m	2 0	10m	125J	1 8	220	10u	70	40u§		1 6k	125J	15 ∅	TO94#△
67	70C80F	800	70	125J	200m§	200m	3.0	10m	125J	1.8	220	10u	70	40u§		1.6k	125J	15 ∅	TO83#△
68	BTX37/800R	800	75		10m∅	80m	3 0			3.3	500	3 0u	50	20u		680	125J	500m	TO49
69#	SH50L11	800	79	83C	150m	100m	3.0	8.0m	125J	1.7	150	6.0u	100	20u	100 △	1.0k	125J	5 0 ∅	S340
70▼#	12TC80	800	80		100m	100m	3.0			1.5		10u		150u	50 §	1.5k*	125J		S183b
71#	2SF552	800 ☑	80	50B		100m	3.5	10m	125J	2 3	500					1 0k	125J	5.0	S189d
72#	2SF788	800	80	55C		100m	3 5	10m	125J	2.3	500		50	30	200	1.0k	125J	500m	S189d
73#	2SF788A	800	80	55		100m	3 5	10m	125J	2.3	500		50	30	200	1.0k	125J	500m	S189d
74#	CR31-903A	800	80	55C	38m∅	60m	3.0	10m†	125C	1 7	100	3.7u	100	130u	20	700	135J	5.0 ∅	TO49
75#	CR31-904AA	800	80	55C	38m∅	60m	3 0	10m†	125C	1 7	100	5 7u	100	20u☑	20	700	135J	5 0 ∅	TO49
76	36RA80	800 ☑	80 △	75C	500m	150m	2 5	12m	125C	2.2 †	160				200 §	1 0k△	125J	2.0 †	TO94
77	36RC80A	800 ☑	80 △	75C	20 ∅	700m	2 5	2 0m∅	125C	2.2 †	160					850 △	125J	2 0 †	TO94
78	36RCF80A	800 ☑	80 △	75C	20 ∅	700m	2.5	2.0m	125C	2.2 †	160		50	20 §		850 △	125J	2.0 †	TO94
79	36RE80	800 ☑	80 △	75C	500m	150m	2.5	5.0m	125C	2.2 †	160				10 §	1.0k△	125J	2.0 †	TO94
80	37RA80	800 ☑	80 △	75C	500m	150m	2 5	12m	125C	2.2 †	160				200 §	1.0k△	125J	2 0 †	TO83
81	37RC80A	800 ☑	80 △	75C	20 ∅	700m	2.5	2 0m∅	125C	2.2 †	160					850 △	125J	2.0 †	TO83
82	37RCF80A	800 ☑	80 △	75C	20 ∅	700m	2.5	2.0m	125C	2 2 †	160			20 §		850 △	125J	2.0 †	TO83
83	37RE80	800 ☑	80 △	75C	500m	150m	2 5	5 0m	125C	2 2 †	160				10 §	1.0k△	125J	2 0 †	TO83
84#	CR80-08	800	80	75C	60m	100m	3.0	5.0m	100J	1.7	250	4 5u	80	30u		800	100	5 0	S284
85#	51RC80	800	80 △	84B	50m	70m	2 5	1.5		2.2	50	4.5u	50	60u	20	700	125A	5.0 ∅	S237c
86	36REH80	800 ☑	80 △	100C	500m	150m	2.5	15m	150C	2 1 †	160				10 §	900 △	150J	2.0 †	TO94
87	37REH80	800 ☑	80 △	100C	500m	150m	2.5	15m	150C	2.1 †	160				10 §	900 △	150J	2 0 †	TO83
88▼#	12TCA80	800	80	125	100	100m	3 0							100u	100 §	1.5k	125	10	
89	250S	800	80	125J		100m	3.0	10m	125J	1 3	50	4 0u	50	100u	300	1 6k*	125J	3 †	Z59
90#	CS42-08	800	82	35	200m	110m	2.0	10m	115	1.9	180			180u	200	900	115	4.0	
91#	37TB8	800	85	66B		15	3.0	15m		1 9	175					930	125	1.0	S63d
92#	CR70-901A	800 †	85	75C		100m	3.0	15m	25C	1.7	70				20	1 0k	125C	1.0	TO49
93#	CR70-901C	800	85	75C		100m	3.0	30m†	125C	1.7	210				20	1 0k	125	5.0	M376
94▼#	T70N800	800	85	85C	200m	150m	5.0m	25m	125J	2 8	400	4.5u	30	50u	50	2.0k§	125J		
95#	CS80-08	800	90	75	50m	80m	3.0	15m	125	1 5	200			70	1.0k	1.2k	45	10	
96▼#	SKT90-08AU	800	90	85C	150m	150m	3.0			1 6	110			25u☑	50 §∅	2.2k	130A	500m	S260c
97▼#	SKT90-08BU	800	90	85C	150m	150m	3 0			1.6	110			25u☑	50 §	2.2k	130A	500m	S260c
98▼#	SKT90-08CU	800	90	85C	150m	150m	3.0			1 6	110			25u☑	200 §	2 2k	130A	500m	S260c
99▼#	SKT90-08DU	800	90	85C	150m	150m	3.0			1 6	110			25u☑	500 §	2.2k	130A	500m	S260c
100▼#	SKT90-08EU	800	90	85C	150m	150m	3 0			1.6	110			25u☑	1.0k§	2.2k	130A	500m	S260c
101▼#	SKT91-08A	800	90	105C	150m	150m	3 0			1.6	110			70u	50 §∅	2.2k	150A	500m	S260c
102▼#	SKT91-08B	800	90	105C	150m	150m	3.0			1.6	110			70u	50 §	2.2k	150A	500m	S260c
103▼#	SKT91-08C	800	90	105C	150m	150m	3 0			1.6	110			70u	200 §	2.2k	150A	500m	S260c
104▼#	SKT91-08D	800	90	105C	150m	150m	3 0			1.6	110			70u	500 §	2.2k	150A	500m	S260c
105▼#	SKT91-08E	800	90	105C	150m	150m	3.0			1 6	110			70u	1.0k§	2.2k	150A	500m	S260c
106#	BTX51-800R	800	95	85B	10m§∅	70m	3 0	13m	125J	2.1	500	3 0u	50	20u	10	900	125J	5.0	TO49
107#	TT8FA	800	95	85C		500m	3 0	25m	125J	2.0	350	3.0u§	100	20u§	100 §	2.0k		1.5	S204a
108#	TT8FB	800	95	85C		500m	3.0	25m	125J	2 0	350	3.0u§	100	40u§	100 §	2.0k		1.5	S204a
109	BTX38/800R	800	100		10m∅	70m	3 0			2.5	500	3.0u	50	20u		1.0k	125J	500m	TO49
110#	CR100-08	800	100	50	20	2.0	10		125	1 7	350	45u	100	25u	20	1.0k	125	5.0	S267c

SYMBOLS AND CODES EXPLAINED IN INTERPRETER

6. SILICON CONTROLLED RECTIFIERS

IN ORDER OF (1) PEAK REV. VOLT., (2) MAX. CONT. CUR., (3) TEMPERATURE, (4) TYPE No.

LINE No.	4 TYPE No.	1 PRV and VBO (V)	MAX. CONT. CURRENT 2 Idc (A)	3 at TEMP (°C)	MAX. HOLD CUR Ih @ 25°C (A)	MAX. GATE FIRING SPEC at 25°C Igf (A)	Vgf (V)	MAX SAT I Ir@PRV and Is@VBO (A)	at TEMP (°C)	MAX. FWD. VOLT. DROP at 25°C Vf (V)	@ If (A)	SWITCHING TIME at 25°C Ton (s)	for If (A)	Toff (s)	MIN. dV/dt @ 25°C (V/us)	ABS. MAX. RATINGS 1Cy PK SURGE I@25°C (A)	MAX TEMP (°C)	MAX GATE POWER (W)	DWG. No.
1#	38TB8	800	100	62B		.15	3 0	15m		1.8	205					1 0k	125	1 0	S63d
2	100C80	800	100	125J	200m	200m	2.5	25m	125J	2.0	500	10u	100	40u§		2 0k	125J	10 Ø	TO93#△
3	100C80B	800	100	125J	200m	200m	2 5	25m	125J	2.0	500	10u	100	40u§	100	2 0k	125J	10 Ø	TO93#△
4#	CR51-903A	800	105	55C	38mØ	60m	3 0	10m†	125C	1.6	150	3 4u	120	185u	20	760	135J	5.0	TO49
5#	BStH0455	800	110	46C	180m	100m	2 0	10m	110J	1 5	110			20u§	50 §	1.0k	110J	20	S189e
6	JAN2N3093	800	110	60B	40m	70m	3 0			1 4	50		50	40u⊘	20 §	1 0k	125B	500m	TO94
7	JAN2N3101	800	110	60B	40m	70m	3.0			1.4	50		50	40u⊘	20 §	1.0k	125B	500m	TO94
8	72RE80	800 §	110	60C	15mØ	70m	2 0	2.5mØ	125J	1.8	220					1 0k△	125J	5.0 Ø	TO83
9	72RE80A	800 §#	110	60C	15mØ	70m	2 0	2 5mØ	125J	1.8	220					1.0k△	125J	5.0 Ø	TO83
10	2541S	800	110	60C		200m	3.0	10m	125J	1.7 §	50	3 5u	50	15u	100	1.4k*	125J	3.0 †	Z59
11	2542S	800	110	60C		200m	3.0	10m	125J	1.7 §	50	8.0u	50	20u	100	1 4k*	125J	3.0 †	Z59
12	C50N△	800	110 △	60B	100m	75m	3.0	6.0m△	125J	2.5	500	5 0u	50	30u§	15 §	1.0k	125	500m	TO94
13	C52N	800	110 △	60B	100m	75m	3 0	6.0m△	125J	2.5	500	5 0u	50	30u§	15 §	1 0k	125	500m	S315
14	71RC80A	800 ⊘	110 △	62C	20mØ	70m	2.5	2.0mØ	125J	1.9 †	220					1.0k△	125J	5 †	TO94
15	72RC80A	800 ⊘	110 △	62C	20mØ	70m	2.5	2 0mØ	125J	1.9 †	220		50	30u§		1.0k△	125J	.5 †	TO83
16	71RB80	800 ⊘	110 △	65C	500m	150m	2 5	12m	125J	2.5 †	220	2.0u	50	30u§	200 △	1 2k△	125J	2 †	TO94
17	71REB80	800 ⊘	110 △	65C	500m	150m	2 5	5 0m	125J	2 5 †	220	2.0u	50	30u§	200 △	1 2k△	125J	2 †	TO94
18	72RB80	800 ⊘	110 △	65C	500m	150m	2 5	12m	125J	2.5 †	220	2.0u	50	30u§	200 △	1 2k△	125J	2 †	TO83
19	72REB80	800 ⊘	110 △	65C	500m	150m	2 5	5.0m	125J	2 5 †	220	2.0u	50	30u§	200 △	1.2k△	125J	2 †	TO83
20	C150N△	800	110 △	70C	500m	150m	3 0	20m	120C	2.6	500	8 0u	50	100u§	200	1 5k	125J	10	TO94
21	C151N△	800	110 △	70C	500m	150m	3 0	20m	125C	3.5	500	8.0u	50	50u§	200	1.0k	125J	10	S91
22	C152N△	800	110 △	70C	500m	150m	3 0	20m	120C	2.6	500	8 0u	50	100u§	200	1 5k	125J	10	S315
23	C153N△	800	110 △	70C	500m	150m	3 0	20m	120C	3 5	500	8.0u	50	50u§	200	1 0k	125J	10	S108
24#	71RC80	800	110 △	79B	50m	70m	2 5	2 0m		1 9	70	4 5u	50	70u	20	1 0k	125A	5 0 Ø	S237c
25	71RA80	800 ⊘	110 △	80C	500m	150m	2 5	12m	125J	1 9 †	220	2.0u	50	50u§	200 △	1.6k△	125J	2 †	TO94
26	71REA80	800 ⊘	110 △	80C	500m	150m	2.5	5 0m	125J	1.9 †	220	2.0u	50	50u§	200 △	1 6k△	125J	2 †	TO94
27	72RA80	800 ⊘	110 △	80C	500m	150m	2.5	12m	125J	1 9 †	220	2.0u	50	50u§	200 △	1.6k△	125J	2 †	TO83
28	72REA80	800 ⊘	110 △	80C	500m	150m	2 5	5.0m	125J	1 9 †	220	2 0u	50	50u§	200 △	1.6k△	125J	2 †	TO83
29	NLE151N	800	110	80C	50	15	2 5	8.0m	125J	2.6	500	8 0u	50	50u	200	1 4k	125J	2.0 †	TO94
30	NLE153N	800	110	80C	50	.15	2 5	8 0m	125J	2.6	500	8 0u	50	50u	200	1 4k	125J	2 0 †	TO83
31	NLF151N	800	110	80C	500m	150m	2 5	8.0m	125J	2 6 †	500	8.0u	50	50u⊘	200	1.4k	125J	2 0 †	TO94
32	NLF153N	800	110	80C	500m	150m	2.5	8.0m	125J	2.6 †	500	8.0u	50	50u⊘	200	1 4k	125J	2.0 †	TO83
33	NLF158N	800	110	83C	500m	150m	2.5	8 0m	125J	3.0 †	500	5.0u	50	40u§	200	1 4k	125J	2.0 †	TO94
34	NLF159N	800	110	83C	500m	150m	2 5	8 0m	125J	3.0 †	500	5.0u	50	40u⊘	200	1 4k	125J	2 0 †	TO83
35▼#	SKT110-08AV	800	110	85C	200m	200m	3.0			1 6	70			30u⊘	50 §Ø	2 8k	130A	1 0	S260d
36▼#	SKT110-08BT	800	110	85C	200m	200m	3 0			1.6	70			20u⊘	50 §	2.8k	130A	1 0	S260d
37▼#	SKT110-08BV	800	110	85C	200m	200m	3 0			1.6	70			30u⊘	50 §	2 8k	130A	1 0	S260d
38▼#	SKT110-08CT	800	110	85C	200m	200m	3 0			1.6	70			20u⊘	200 §	2.8k	130A	1.0	S260d
39▼#	SKT110-08CV	800	110	85C	200m	200m	3 0			1 6	70			30u⊘	200 §	2.8k	130A	1.0	S260d
40▼#	SKT110-08DT	800	110	85C	200m	200m	3 0			1 6	70			20u⊘	500 §	2.8k	130A	1 0	S260d
41▼#	SKT110-08DV	800	110	85C	200m	200m	3 0			1.6	70			30u⊘	500 §	2 8k	130A	1 0	S260d
42▼#	SKT110-08EV	800	110	85C	200m	200m	3 0			1 6	70			30u⊘	1.0k§	2.8k	130A	1.0	S260d
43	NLE150N	800	110	89C	50	15	2 5	4 0m	125J	2.6	500	8 0u	50	150u	200	1 6k	125J	2 0 †	TO94
44	NLE152N	800	110	89C	.50	15	2 5	4 0m	125J	2.6	500	8.0u	50	150u	200	1.6k	125J	2 0 †	TO83
45	NLH150N	800	110	89C	.50	15	2 5	4 0m	125J	2 6	500	8.0u	50	150u	200	1.6k	125J	2 0 †	TO94
46	NLH152N	800	110	89C	50	15	2 5	4 0m	125J	2 6	500	8.0u	50	150u	200	1 6k	125J	2 0 †	TO83
47	71REJ80	800 ⊘	110 △	90C	500m	150m	2 5	15m	150J	2 5 †	220	2.0u	50	50u§	50 △	1 0k△	150J	2 †	TO94
48	72REJ80	800 ⊘	110 △	90C	500m	150m	2 5	15m	150J	2 5 †	220	2 0u	50	50u§	50 △	1 0k△	150J	2 †	TO83
49	NLC150N	800	110	90C	50	15	2 5	10m	125J	2 6	500	8.0u	50	100u	200	1 8k	125J	2 0 †	TO49
50	NLC152N	800	110	90C	50	15	2 5	10m	125J	2.6	500	8.0u	50	100u	200	1.8k	125J	2 0 †	TO83
51	NLC350N	800	110	90C	50	15	2 5	8 0m	125J	2 6	500	8 0u	5 0	100u	200	1 8k	125J	2 0 †	M456
52	71REH80	800 ⊘	110 △	105C	500m	150m	2 5	15m	150J	1 9 †	220	2 0u	50	60u§	50 △	1 4k△	150J	2 †	TO94
53	72REH80	800 ⊘	110 △	105C	500m	150m	2.5	15m	150J	1 9 †	220	2.0u	50	60u§	50 △	1 4k△	150J	2 †	TO83
54▼#	SKT111-08A	800	110	105C	200m	200m	3.0			1 6	70			80u	50 §Ø	2 8k	150A	1.0	S260d
55▼#	SKT111-08B	800	110	105C	200m	200m	3 0			1 6	70			80u	50 §	2 8k	150A	1 0	S260d
56▼#	SKT111-08C	800	110	105C	200m	200m	3 0			1 6	70			80u	200 §	2 8k	150A	1.0	S260d
57▼#	SKT111-08D	800	110	105C	200m	200m	3 0			1.6	70			80u	500 §	2.8k	150A	1.0	S260d
58▼#	SKT111-08E	800	110	105C	200m	200m	3.0			1.6	70			80u	1 0k§	2 8k	150A	1 0	S260d
59#	10TC80	800	110	125	20m	60m	3 0			1 5	110	5 0u	110	25u		1 1k	125J	20	S185
60	C158N	800	110 △	125J	500m	150m	3 0	13m	125C	3 5 †	500				200 §	1.2k△	125J	2.0 †	TO94
61	C159N	800	110 △	125J	500m	150m	3.0	13m	125C	3 5 †	500				200 §	1 2k△	125J	2 0 †	S315
62#	T95F800	800	115	85C	300m	100m	3 0	30m	125J	1 8	300	2 5u⊘	50	30u§	50 §	2.0k§	125J		M330a%
63#	CR120-08	800	120	75C	60m	100m	3 0	5 0m	125J	2 1	370	4.5u	120	40u		1.0k	125	5 0	S284
64#	CR100-901C	800 △	124	80C		100m	3 0	15m	25C	1 7	100				20	1 2k	125C	1.0	M376
65#	CR100-901D	800	125	80C	30mØ	100m	3 0	30m†	125C	1 7	300			100	20	1 5k	125	5.0	TO49
66	2505S	800	125	95C		10	3.0	15m	150J	1.3	50				300	1 6k	150J		TO83
67#	SH80L11	800	126	82C	200m	150m	3 0	15m	125J	1 7	250	6 0u	160	20u	100 △	1.6k	125J	5 0 Ø	S337a
68#	SF80L11	800	126 △	85C	200m	150m	3 0	15m	125	1 7 §	250	6.0u	80		15	1.6k	125J	5 0	S267b
69#	42TB8	800	135	57B		20	3 0	15m		2.2	265					1 4k	125	1 5	M308
70♦#	30TC80	800	140		150m	100m	3 0			1 5					50 §Ø	3 5k*	125J		S348
71▼#	SKT140-08AV	800	140	85C	200m	200m	3 0			1 6	200			30u⊘	50 §Ø	3 9k	130A	1 0	S260d
72▼#	SKT140-08BV	800	140	85C	200m	200m	3.0			1.6	200			30u⊘	50 §	3.9k	130A	1.0	S260d
73▼#	SKT140-08CV	800	140	85C	200m	200m	3 0			1.6	200			30u⊘	200 §	3 9k	130A	1 0	S260d
74▼#	SKT140-08DV	800	140	85C	200m	200m	3 0			1 6	200			30u⊘	500 §	3 9k	130A	1 0	S260d
75▼#	SKT140-08EV	800	140	85C	200m	200m	3 0			1 6	200			30u⊘	1.0k§	3 9k	130A	1.0	S260d
76▼#	SKT141-08A	800	140	105C	200m	200m	3 0			1.6	200			80u	50 §Ø	3 9k	150A	1 0	S260d
77▼#	SKT141-08B	800	140	105C	200m	200m	3 0			1.6	200			80u	50 §	3 9k	150A	1.0	S260d
78▼#	SKT141-08C	800	140	105C	200m	200m	3 0			1.6	200			80u	200 §	3 9k	150A	1 0	S260d
79▼#	SKT141-08D	800	140	105C	200m	200m	3.0			1.6	200			80u	500 §	3 9k	150A	1 0	S260d
80▼#	SKT141-08E	800	140	105C	200m	200m	3 0			1.6	200			80u	1 0k§	3 9k	150A	1 0	S260d
81▼#	20TCA80	800	140	125	150	100m	3 0							100u	100 §	3 0k	125	10	
82▼#	BStL2455	800	150	50C	150m	300m	2 0	10m	110J	1.8	450			25u⊘	50 §	2.5k	110	50	
83	TT8	800	150	60C	300m	500m	3 0	25m	100J	2.2	350	5.0u	15		20 §Ø	2.0k	100C	1 0	S204
84	2N2549	800	150	80C	50m§	150m§	3.0 §	7.5m	80C	1.5	150				4 0	3 5k§	125C	2.0 †	TO93
85#	CR150BX16	800	150	81C		300m	3 0	15mØ	125J	1 9	500			30u⊘	100 △	4.0k	125J	16 Ø	S237a
86#	FT150BX16	800	150	81C		300m	3 0	15m	125J	1.9	500		150	30u⊘	100 △	4.0k△	125J	16 Ø	M567
87#	TT280FA	800	150	85C		500m	3 0	25m	125J	2 0	450	3 0u§	100	20u§	100 §	3.2k		1.5	S204a
88#	TT280FB	800	150	85C		500m	3 0	25m	125J	2 0	450	3.0u§	100	40u§	100 §	3.2k		1 5	S204a
89	150C80	800	150	125J	200m	200m	2 5	25m	125J	1.7	500	10u	150	40u§		3.0k	125J	10 Ø	TO93#△
90	150C80B	800	150	125J	200m	200m	2 5	25m	125J	1 7	500	10u	150	40u§	100	3.0k	125J	10 Ø	TO93#△
91	101RA80	800 ⊘	160 △	80C	500m	150m	2.5	20m	125J	2.1 †	314	2 0u	150	35u§	200 △	2.0k△	125J	2 †	TO93
92	101RC80	800 ⊘	160 △	80C	50mØ	150m	2.5	4 0mØ	125J	1 7 †	314		150	25u§		2.0k△	125J	2 †	TO93
93	101RE80	800 ⊘	160 △	80C	500m	150m	2 5	8 0m	125J	2 1 †	314	2 0u	150	35u§	4 0 △	2.0k△	125J	2 †	TO93
94♦	115PA80	800 ⊘	170 △	85C	500m	150m	2 5	15m	125C	2 3 †	340				200 §	1.6k△	125J	2 0 †	Y200b
95▼#	SKT170-08AY	800	170	85C	200m	250m	3.0			1 6	500			45u⊘	50 §Ø	6 6k	130A	1 0	S355
96▼#	SKT170-08BV	800	170	85C	200m	250m	3.0			1 6	500			30u⊘	50 §	6.6k	130A	1.0	S355
97▼#	SKT170-08BY	800	170	85C	200m	250m	3 0			1 6	500			45u⊘	50 §	6 6k	130A	1 0	S355
98▼#	SKT170-08CV	800	170	85C	200m	250m	3 0			1 6	500			30u⊘	200 §	6 6k	130A	1 0	S355
99▼#	SKT170-08CY	800	170	85C	200m	250m	3 0			1 6	500			45u⊘	200 §	6.6k	130A	1 0	S355
100▼#	SKT170-08DV	800	170	85C	200m	250m	3.0			1.6	500			30u⊘	500 §	6.6k	130A	1 0	S355
101▼#	SKT170-08DY	800	170	85C	200m	250m	3 0			1 6	500			45u⊘	500 §	6.6k	130A	1.0	S355
102▼#	SKT170-08EY	800	170	85C	200m	250m	3 0			1 6	500			45u⊘	1.0k§	6 6k	130A	1.0	S355
103▼#	SKT171-08A	800	170	105C	200m	250m	3 0			1 6	500			100u	50 §Ø	6 6k	150A	1 0	S355
104▼#	SKT171-08B	800	170	105C	200m	250m	3 0			1 6	500			100u	50 §	6.6k	150A	1 0	S355
105▼#	SKT171-08C	800	170	105C	200m	250m	3 0			1.6	500			100u	200 §	6 6k	150A	1.0	S355
106▼#	SKT171-08D	800	170	105C	200m	250m	3 0			1.6	500			100u	500 §	6 6k	150A	1 0	S355
107▼#	SKT171-08E	800	170	105C	200m	250m	3 0			1 6	500			100u	1 0k§	6 6k	150A	1 0	S355
108#	43TB8	800	175	62B		20	3 0	15m		2 2	390					1 9k	125	1.5	M308
109▼#	2SF1147	800	175	75C		300m	3 0	15m	125J	1 7 §	500				100 △	4 0k△	125J	16 Ø	S237e
110#	CR150F16	800	175	75C		300m	3 0	15m	125J	1 7 §	500				100 §	4 0k	125J	16 Ø	S237e

SYMBOLS AND CODES EXPLAINED IN INTERPRETER

6. SILICON CONTROLLED RECTIFIERS

IN ORDER OF (1) PEAK REV. VOLT., (2) MAX. CONT. CUR., (3) TEMPERATURE, (4) TYPE No.

LINE No.	4 TYPE No.	1 PRV and VBO (V)	MAX. CONT CURRENT 2 Idc (A)	3 at TEMP (°C)	MAX. HOLD. CUR Ih @ 25°C (A)	MAX. GATE FIRING SPEC at 25°C Igf (A)	Vgf (V)	MAX SAT I Ir@PRV and Is@VBO (A)	at TEMP (°C)	MAX. FWD. VOLT DROP at 25°C Vf (V)	@ If (A)	SWITCHING TIME at 25°C Ton (s)	for If (A)	Toff (s)	MIN. dV/dt @ 25°C (V/us)	ABS. MAX. RATINGS 1Cy PK SURGE I@25°C (A)	MAX TEMP (°C)	MAX GATE POWER (W)	DWG. No.
1#	FT150B16	800	175	75C		300m	3 0	15m	125J	1 7	500 §				100 △	4.0k△	125J	16 Ø	M567
2	2N3892	800	175	80	200m	400m	4 0	15m	125	1 8	175					4 5k	125	3.0	TO93
3	C350N	800	175	80C	500m	150m	3 0	10m	25	2.6	500	8 0u	50	100u	200	1.5k	120C	2 0	M514
4	2201S	800	175	125J		300m	4 0	15m	125J	1 3 §	100	4.0u	100	30u	100	4 0k*	125J	3 0 †	TO93
5	2202S	800	175	125J		300m	4.0	15m	125J	1 3 §	100	8 0u	100	40u	100	4 0k*	125J	3 0 †	TO93
6▼#	T161N800	800	180	85C	300m	200m	2 0	50m	125J	1.8	500	4.0u	100	50u	50	5 2k§	125J		M330d
7	C358N	800	180 △	125J	500m	150m	3 0	13m	125C	3.5	500	2 0u	50	30u⊠	200	1.2k	125J	2.0	M514
8#	CS130-08	800	190	55	100m	150m	3.0	30m	125	1.7	400			60u	1 0k	3 5k	125	30	
9▼#	TY120SP8K2	800	190	70B	40m	220m	3 5	25m	125J	1 7	300				200 §	2.7k	125J	3.0 †	S375a
10#	46TB8	800	195	56B		20	3 0	15m		2 0	390					2 1k	125	1.5	M308
11#	2SF557	800 ⊠	200	62B		125m	2 5	15m	125J	2 1	1.0k					3.5k	125J	10	S167
12	261S	800	200	80		15	3.0	15m	125J	1 4	100				300	3.3k	125		TO93
13	2181S	800	200	80C		300m	4 0	15m	125J	1.3 §	100	4 0u	100	20u	100	3.3k*	125J	3 †	TO93
14	2182S	800	200	80C		300m	4.0	15m	125J	1.3 §	100	8 0u	100	30u	100	3.3k*	125J	3 †	TO93
15	263S	800	200	85		.15	3 0	15m	125J	1.3	50				300	1.6k	125		M414
16▼#	T171F800	800	200	85C	300m	200m	2 0	50m	125J	1 8	500	7.5u	100	20u⊠	50	5 8k§	125J		M330d
17#	TT380	800	200	85C	40mØ	500m	3 0	25m	125J	1.6	600	5 0u§		100u§	100 Ø§	4.0k		1 5	S204a
18▼#	30TCA80	800	200	125	150	100m	3 0								100 §	5.5k	125	10	
19#	CR155-904NA	800	210	70C	35mØ	150m	3.5	30m†	125C	1.8	450			35u⊠	100	2.1k	125	5 0 Ø	M201
20#	47TB8	800	220	50B		20	3 0	15m		1.9	440					2.4k	125	1 5	M308
21#	CR153-903A	800	220	70C	35mØ	150m	3.5	30m†	125C	1 6	450				100	3.0k	125	5 0 Ø	M201
22▼#	SKT220-08AY	800	220	85C	200m	250m	3 0			1.6	800			45u⊠	50 §Ø	7 8k	130A	1 0	S355
23▼#	SKT220-08BY	800	220	85C	200m	250m	3 0			1.6	800			45u⊠	50 §	7.8k	130A	1 0	S355
24▼#	SKT220-08CY	800	220	85C	200m	250m	3.0			1.6	800			45u⊠	200 §	7 8k	130A	1.0	S355
25▼#	SKT220-08DY	800	220	85C	200m	250m	3 0			1.6	800			45u⊠	500 §	7.8k	130A	1 0	S355
26▼#	SKT220-08EY	800	220	85C	200m	250m	3 0			1.6	800			45u⊠	1.0k§	7.8k	130A	1 0	S355
27▼#	SKT221-08A	800	220	105C	200m	250m	3 0			1.6	800			100u	50 §Ø	7.8k	150A	1.0	S355
28▼#	SKT221-08B	800	220	105C	200m	250m	3 0			1 6	800			100u	50 §	7.8k	150A	1 0	S355
29▼#	SKT221-08C	800	220	105C	200m	250m	3 0			1.6	800			100u	200 §	7.8k	150A	1 0	S355
30▼#	SKT221-08D	800	220	105C	200m	250m	3.0			1.6	800			100u	500 §	7.8k	150A	1.0	S355
31▼#	SKT221-08E	800	220	105C	200m	250m	3.0			1 6	800			100u	1 0k§	7.8k	150A	1.0	S355
32#	20TC80	800	220	125	50m	100m	3 0			1.5	200	5 0u	200	30u		2.5k	125J	20	S183
33#	CR152-903A	800	230	70C	35mØ	150m	3.5	30m†	125C	1.5	450				100	3.1k	125	5 0	M201
34#	2SF798	800	235	55		125m	3 0	15m	125J	2.1	1 0k		100	40	200	3.5k	125J	10	S167
35#	2SF798A	800	235	55		125m	3 0	15m	125J	2 1	1 0k		100	20	200	3.5k	125J	10	S167
36	151RC80	800 ⊠	235 △	62C	50mØ	100m	2 5	4.0mØ	125J	1.7 †	471		150	25u§		3 0k△	125J	2 †	TO93
37	151RB80	800 ⊠	235 △	75C	500m	150m	2 5	20m	125J	2 2 †	471	2 0u	150	40u§	200 △	2 5k△	125J	2 †	TO93
38	151REB80	800 ⊠	235 △	75C	500m	150m	2 5	8 0m	125J	2.2 †	471	2.0u	150	40u§	200 △	2 5k△	125J	2 †	TO93
39#	SF150L11	800	235	76S	200m	150m	3 0	20m	125J	1.5	500					3 2k	125	16	S91b
40	151RC80A	800 ⊠	235 △	80C	50mØ	100m	2 5	4 0mØ	125J	1.4 †	471		150	40u§		3.5k△	125J	2 †	TO93
41	C180N△	800	235 △	80C	500m	150m	3.0	10m	25	2.9 †	1.5k	8 0u	100	75u	200	3 5k	125C	2.0	TO93
42	NLF180N	800	235 △	80C	500m	150m	2 5	6.0m	125J	2 8	1 5k	8.0u	100	80u	200	3 5k	125J	2.0 †	TO93
43#	TT280	800	235	80C	250m	500m	3 0	25m	125J	1 7	450	5 0u	15	20u	100 §Ø	3.2k	125C	1.0	S204
44	151RA80	800 ⊠	235 △	85C	500m	150m	2 5	20m	125J	1.8 †	471	2.0u	150	60u§	200 △	3 5k△	125J	2 †	TO93
45	151REA80	800 ⊠	235 △	85C	500m	150m	2.5	8.0m	125J	1 8 †	471	2.0u	150	60u§	200 △	3.5k△	125J	2 †	TO93
46♦	C280N	800	235	85C	100m	150m	3.0			1.4	500	10u	5.0	250u§	100 §	3.5k	125J	3.0	S132
47▼	C281N	800	235	85C	100m	150m	3 0			1.4	500	10u	5.0	250u§	100 §	3.5k	125J	3.0	S247a
48#	CR151-903A	800	240	70C	35mØ	150m	3.5	30m†	125C	1.4	450				100	3.3k	125	5.0	M201
49#	CR250GX16	800	250	50C		350m	4.0	15m	125J	1.9	780 §		250	30u⊠	100 △	5.0k△	125J	16 Ø	M569
50#	FT250BX16	800	250	52C		350m	4 0	15m	125J	1.9	780 §		250	30u⊠	100	5 0k△	125J	16 Ø	M567
51#	FT250B16	800	250	55C		350m	4.0	15m	125J	1.8	780 §				100 △	5.0k△	125J	16 Ø	M567
52#	CR250AX16	800	250	61C	30mØ	350m	4.0	15m	125J	1.9 §	780			30 §	100 §	5.0k	125J	16 Ø	S158e
53#	2SF539	800	250	65C		350m	4 0	15mØ	125J	1.8	780				10 △	5 0k	125J	16 Ø	S158b
54♦#	BTX41-800R	800	250	65B	150m	250m	2.5	10m	110J	1.5 §	600 §	20u	250	200u	20 §	5.5k*	110J	2.0 †	S237g
55#	CR250F16	800	250	65C		350m	4.0	15m	125J	1.8 §	780				100 §	5.0k	125J	3.0 †	S158e
56	2N3361	800	250	80C	200m§	400m§	4.0 §	15m	125C	2.0 §	250					5.0k§*	125C	3.0 †	TO108
57#	T250F800	800	250	85C	300m	200m	2.0	50m	125J	1 7	500	3 0u	100	30u§	400 §	5 5k§	125J	150	M387
58▼#	TY180NP8K2	800	260	70B	50m	200m	3.5	25m	125J	1 0	600	10u⊠	500	20n⊠	20 §	4.3k	125J	1.5 †	S375
59▼#	TY180QP8K2	800	260	70B	50m	200m	3.5	25m	125J	1.6	600	10u⊠	500	30u⊠	20 §	4.3k	125J	1.5 †	S375
60▼#	T221N800	800	260	85C	300m	200m	2 0	50m	125J	1 5	500	4.0u	100	60u	50	6.5k§	125J		M330d
61#	61TB8	800	275	67B		.30	3 0	40m		2.4	665					3.2	125	2.0	M308a
62	260S	800	275	80		15	3 0	15m	125J	1 2					300	3.3k	125		TO93
63♦	175PA80	800 ⊠	275 △	85C	500m	150m	2.5	20m	125C	2.3 †	550				200 §	3.0k△	125J	2.0 †	Y200b
64#	CS220-08	800	290	70	100m	150m	3.0	50m	125	1.6	600			60u	1.0k	5.2k	125	30	
65♦#	40TC80	800	300		150m	100m	3 0			1.5					50 §Ø	4.5k*	125J		S348
66#	CR300AW16	800	300	11A	30mØ	350m	4.0	15m	125J	1 9 §	780			50 §	100 §	5.0k	125J	16 Ø	S300
67#	CR300AX16	800	300	11A	30mØ	350m	4 0	15m	125J	1.9 §	780			30 §	100 §	5.0k	125J	16 Ø	S300
68▼#	2SF926	800	300	15A		350m	4 0	15m	125J	1.8 §	780				100 △	5.0k△	125J	16 Ø	S300
69#	CR300F16	800	300	15A		350m	4 0	15m	125J	1.8 §	780				100 §	5.0k	125J	16 Ø	S300
70	273S	800	300	70		.15	3.0	15m	125J	1.3	100				300	3.3k	125		M414
71▼#	FT300A16	800	300	81C		200m	3.0	30m	125J	1.6	940 §				200 △	6.0k△	125J	16 Ø	M567a
72#	CS300-08	800	300	85	100m	150m	3.0	40m	125	1.5	900			100u	1.0k	7.0k	125	50	
73▼#	40TCA80	800	300	125	150	100m	3 0								100 §	5.5k	125	10	
74	2231S	800	300	125J		300m	4.0	15m	125J	1.3 §	100	4.0u	100	30u	100	4.5k*	125J	3 0 †	M247
75	2232S	800	300	125J		300m	4 0	15m	125J	1.3 §	100	8.0u	100	40u	100	4.5k*	125J	3 0 †	M247
76	2248S	800	300	125J		300m	4 0	10m	125J	1.0 §	100	5.0u	150	50u	100	5.0k*	125J	3 0 †	M308c
77▼#	TY290SP8K2	800	305	70B	45m	220m	3.5	25m	125J	1.7	1 0k	10u⊠	500	30u⊠	200 §	7.2k	125J	3 0 †	S373
78▼#	TYA290SP8K2	800	305	70B	45m	220m	3 5	25m	125J	1.6	600				200 §	6 4k	125J	3.0 †	S374
79#	62TB8	800	315	65B		.30	3.0	40m		2.2	665					3.7k	125	2.0	M308a
80#	CR253-903A	800	320	40C	35mØ	150m	3 5	30m†	125C	1.6	450				100	3.5k	125	5 0 Ø	M201
81#	CR252-903A	800	336	50C	35mØ	150m	3 5	30m†	125C	1.5	450				100	3 6k	125	5.0	M201
82#	70TB8	800	355	67B		.30	3.0	40m		2.2	850					4.1	125	2.0	M308a
83▼#	T302N800	800	370	85C	300m	200m	2.0	50m	125J	1.4	500	4.0u	100	80u	50	7.2k§	125J		M330d
84	C380N	800	380	65C	500m	150m	3.0 §	10m	25C	2.8	1.5k	8.0u	100	100u	200	3 5k	120	2.0	M514
85	NLF380N	800	380	67	500m	150m	2 5	10m	25	2.8	1 5k	8.0u	100	100u	200	3.5k	125	2.0	
86♦	250PA80	800 ⊠	390 △	70C	500m	150m	2.5	20m	125C	2.3 †	780				200 §	4 2k△	125J	2.0 †	Y200b
87	2N3538	800	400	20A	200m§	400m	4.0	15m	125J	1.9	250					5.0k	125J	16	M247
88▼	250RM80	800 ⊠	400	60C	500m	150m	2.5	24m	125C	1.7 †	785		500	40u§	200 §	5 5k△	125J	2.0 †	TO118
89▼	251RM80	800 ⊠	400	60C	500m	150m	2.5	24m	125J	1.7 †	785		500	40u§	200 §	5.5k△	125J	2.0 †	TO108
90#	71TB8	800	400	65B		.30	3.0	40m		2.0	850					4.6k	125	2.0	M308a
91#	2SF834	800	400	68B		125m	3.0	25m	125J	1 6	1.0k					7.0k	125J	10	S280
92	250RA80	800 ⊠	400 △	75C	100m	150m	3 0	24m	125J	1.7 †	785	5.0u	250	40u§	100 △Ø	5.0k△	125J	3 †	S158a
93#	FT500AW16	800	400	75C		350m	4.0	30m	125J	2 2	1.2k§		400	50u⊠	200 △	7.0k△	125J	16 Ø	M406
94#	FT500AX16	800	400	75C		350m	4.0	30m	125J	2.2	1 2k§		400	30u⊠	200 △	7.0k△	125J	16 Ø	M406
95#	FT500AY16	800	400	75C		350m	4 0	3 0m	125J	2.2	1.2k§		400	15u⊠	200 △	7.0k△	125J	16 Ø	M406
96#	FT500A16	800	400	76C		350m	4.0	30mØ	125J	2.2 †	1.2k§				200 △	7.0k△	125J	16 Ø	M406
97▼#	2SF932	800	400	77C		350m	4 0	30m	125J	2.2 §	1.2k				200 △	7 0k△	125J	16 Ø	M406
98#	251RC80	800	400 △	85B	40m	.15	2.5	4.0m		1.5	250	6.0u	50	100u	4.0	4 8k	125A	10 Ø	S158d
99#	2SF564	800	400	90B		125m	3.0	25m	125J	1.4	1.0k					7.0k	125	20	S280
100#	73TB8	800	430	64B		30	3.0	40m		2.0	1.0k					5.1k	125	2 0	M308a
101#	CR7K903A45	800	435	65C	55mØ	150m	3 5	50m	125J	1.8	1 0k	3 5u	600	180u	100	6 0k	125J	5.0 Ø	M308b
102▼#	TY490SP8K2	800	450	70B	31m	220m	3.5	25m	125J	1.6	1.0k				200 §	8.9k	125J	3.0 †	S373
103▼#	TYA490SP8K2	800	450	70B	31m	220m	3.5	25m	125J	1 6	1.0k				200 §	8.9k	125J	3.0 †	S374
104▼#	YST302QP8K3	800	450	70B	100m	220m	3.5	30m	125J	1.9	1.0k	4.0u⊠	600	60u⊠	200 §	7.4k	125J	3.0 †	S371a
105#	CR7K903A4	800	460	65C	55mØ	150m	3 5	50m	125J	1.7	100	3 5u	600	180u	100	6.4k	125J	5.0 Ø	M308b
106	276S	800	470			.15	3 0	15m	125J	1.2	100				300	5.5k	125		M247
107	304RA80	800 ⊠	470 △	5A	500m	150m	3.0	23m	125C	1 6 †	940					6.0k△	125J	3 0 †	TO109#
108#	SH300L11	800	470	60C	300m	260m	3.5	20m	125J	1.6	1.0k	6.0u	600	30u	100 △	5.0k	125J	16 Ø	S337b
109#	74TB8	800	470	63B		300m	3.0	40m		1.8	1.0k					5.6k	125	2.0	M308a
110♦	C290N	800	470	65C	100m	150m	3.5			1.2	500	10u	5.0	250u§	100 §	5.5k	125J	3.0	S132

SYMBOLS AND CODES EXPLAINED IN INTERPRETER

6. SILICON CONTROLLED RECTIFIERS

IN ORDER OF (1) PEAK REV. VOLT., (2) MAX. CONT. CUR., (3) TEMPERATURE, (4) TYPE No.

LINE No.	4 TYPE No.	1 PRV and VBO (V)	MAX. CONT. CURRENT 2 Idc (A)	3 at TEMP (°C)	MAX. HOLD. CUR Ih @ 25°C (A)	MAX. GATE FIRING SPEC at 25°C Igf (A)	Vgf (V)	MAX SAT I Ir@PRV and Is@VBO (A)	at TEMP (°C)	MAX. FWD. VOLT. DROP at 25°C Vf (V)	@ If (A)	SWITCHING TIME at 25°C Ton (s)	for If (A)	Toff (s)	MIN. dV/dt @ 25°C (V/us)	ABS. MAX. RATINGS 1Cy PK SURGE I@25°C (A)	MAX TEMP (°C)	MAX GATE POWER (W)	DWG. No.
1♦	C291N△	800	470	65C	100m	150m	3.5			1.2	500	10u	5.0	250u§	100 §	5.5k	125J	3.0	S247a
2#	SF300L11	800	470	65C	300m	260m	3.5	20m	125J	1.6	1.0k	6.0u			15 §	5.0k	125J	3.0	S267a
3	C291N⊘	800	470	66C	100m	150m	3.0	15m	125J	1.2 †	500	5.0u	5.0	100u§	100 §	5.5k	125J	3.0 †	M331a
4	NLF290N	800	470	67	100m	150m	3.0	15m	125	1.2	500	5.0u	5.0	100u	100	5.5k	125	3.0	
5	272S	800	470	71		.15m	3.0	15m	125J	1.2	100				300	5.5k	125		M414
6	300RA80	800 ⊘	470 △	75C	100m	150m	3.0	23m	125J	1.4 †	945	5.0u	250	50u§	100 ⊘△	5.5k△	125J	3 †	TO118
7	300RB80	800 ⊘	470 △	75C	100m	150m	3.0	23m	125J	1.6 †	945	5.0u	250	50u§	25 △	5.5k△	125J	3 †	TO118
8#	301RC80	800	470 △	85B	40m	150m	2.5	4.0m		1.4	300	6.0u	50	100u	4.0	5.5k	125A	10 ⊘	S158d
9	NLF291N	800	470 △	125J	100m	150m	2.5	15m	125J	1.2	500	5.0u	100	100u§	100 §	5.5k△	125J	2.0 †	M436%
10#	CR7K903A35	800	480	65C	140m	150m	3.5	50m	125J	1.6	1.0k	3.5u	600	180u	100	6.9k	125J	5.0 ⊘	M308b
11▼#	YST301QP8K3	800	500	70B	100m	220m	3.5	30m	125J	1.9	1.0k	4.0u⊘	600	20u⊘	200 §	7.4k	125J	3.0 †	S371a
12#	FT500C16	800	500	77C		350m	4.0	30m	125J	1.7 §	1.5k				200 §	10k	125J	16 ⊘	M481
13#	CS500-08	800	500	85	100m	500	3.5	40m	125	1.6	1.5k			200u	1.0k	10k	125	50	
14#	80TB8	800	510	59B		.30	3.0	40m		1.5	1.2k					6.4k	125	2.0	M308a
15#	CR7K903A3	800	520	55	140m	150m	3.5			1.6	1.0k	3.5u	600	180u	100 ⊘	7.0k	125	5.0	
16▼	NLC501N	800	550	25	250m	150m	6.5 §			1.5	1.0k			200u§	100 §	7.0k	125J	5.0 †	M593
17#	81TB8	800	550	56B		.30	3.0	40m		1.7	1.2k					7.0k	125	2.0	M308a
18	350RA80	800	550	65C	100m	150m	3.0	23m	125J	1.4	550	5.0u	50	100u§	100 §⊘	6.2k△	125J	3.0	S158a
19▼	C387N	800	550 △	65	500	150	3.0	45	125	4.2	3.0k	2.0		30	200	5.5k	125	40	
20▼	C388N	800	550 △	65	500	150	3.0	45	125	4.2	3.0k	2.0		20	200	5.5k	125	40	
21	270S	800	550	67		.15	3.0	15m	125J	1.2	500				300	6.5k	125		S295
22▼#	TYC300SP8K2	800	550	70C	31m	220m	3.5	25m	125J	1.7	1.0k				200 §	7.4k	125J	3.0 †	S372
23▼#	TY500SP8K2	800	590	70C	31m	220m	3.5	25m	125J	1.6	1.0k				200 §	10k	125J	3.0 †	S372
24#	84TB8	800	595	58B		.30	3.0	40m		1.6	1.6k					8.6k	125	2.0	M428
25#	CR9K903A25	800	600	65C	55m⊘	150m	3.5	50m	125J	1.3	1.0k	3.5u	600	180u	100	900	125J	5.0 ⊘	M308b
26	C507N	800	625 △	125J	100m	150m	4.0	50m	125C	1.4	500	5.0u	25	100u⊘	100	6.5k	125J	26	M464
27	C508N	800	625 △	125J	100m	150m	4.0	50m	125C	1.3	500	5.0u	25	60u⊘	100	9.0k	125J	26	M464
28#	2SF808	800	628	50		125m	3.0	25m	125J	1.4	1.0k		300	60	200	7.0k	125J	20	S280
29#	2SF808A	800	628	50		125m	3.0	25m	125J	1.4	1.0k		300	30	200	7.0k	125J	20	S280
30#	V2060M	800	628	65		150m	3.0	50m	125J	2.2					200	7.0k	125J	20	M559
31#	SH400L21	800	630	115J		260m	3.5	35m	125J	1.9	1.2k	6.0u	400	50u	50	7.2k	115J	4 †	M433
32▼	420PM80	800 ⊘	660	60C	500m	150m	2.5	24m	125C	2.0 †	1.3k		500	40u§	200 §	5.5k△	125J	2.0 †	Y200c
33♦	420PA80S58	800 ⊘	660 △	68C	500m	150m	3.0	24m	125J	2.0 †	1.2k			40u⊘	100 §	5.5k△	125J	16 ⊘	Y200c
34#	2WDCR152-803B																		
		800	700 △	40B	60m⊘	150m	3.5	30m	125J	2.1	775				100	3.1k	125J		
35▼	C397N	800	700 △	65	500	150	3.0	45	125	2.9	3.0k	2.0		45	200	7.5k	125	40	
36♦	C398N	800	700 △	65	500	150	3.0	45	125	2.9	3.0k	2.0		30	200	7.5k	125	40	
37♦	470PB80T50	800 ⊘	740 △	67C	500m	150m	3.0	24m	125J	1.9 †	1.4k			50u⊘	100 §	6.0k△	125J	16 ⊘	Y200c
38▼#	FT800C16	800	800	63C		200m	3.0	30m	125J	1.6 §	2.5k				200 △	14k△	125J	16 ⊘	M566
39#	SF800L21	800	800	125J		320m	4.0	35	125J	2.1	2.5k					13k	125J	20	M433
40♦	470PA80	800 ⊘	850	60C	500m	150m	3.0	24m	125C	1.7 †	1.7k		250	120u§	100 §	8.0k△	125J	3.0 †	Y200c
41▼#	YST801SP8K2	800	1.0k	70C	100m	220m	3.5	25m	125J	1.6	1.8k				200 §	16k	125J	3.0 †	S371
42#	2WDCR7K803B35																		
		800	1.2k△	40B	80m⊘	150m	3.5	50m	125J	2.0	1.3k				100	7.5k	125J		
43▼	C600N	800	1.4k△	72	750	150	6.5			1.5	2.2k			250	100	13k	125	40	
44	C36S⊘	840	16	52C	20m⊘	80m	3.0	2.0m⊘	100J	2.7 †	50	1.4u	5.0	20u§	100 §	125	100J	.50 †	TO48
45	C37S⊘	840	25	37C	20m⊘	80m	3.0	2.0m⊘	105J	2.3 †	30	1.4u	5.0			175	105J	.50 †	TO48
46	C40S	840	35	62C	10m⊘	40m	2.5	2.0m⊘	125J	2.0 †	50	1.4u	5.0	8.0u	20 §	150	125J	.5 †	TO48
47	C45S⊘	840	55	89C	100m	70m	3.0	4.0m	125J	3.0 †	500	5.0u	50	30u§	100 §	1.2k	125J	.50 †	TO83
48	C46S⊘	840	55	89C	100m	70m	3.0	4.0m	125J	3.0 †	500	5.0u	50	30u§	100 §	1.2k	125J	.50 †	TO49
49	NL555S	840	55	89C	300m	150m	2.5	10m	125J	3.5 †	500	8.0u	50	100u§	200 §	1.2k	125J	2 †	TO49
50	NL556S	840	55	89C	300m	150m	2.5	10m	125J	3.5 †	500	8.0u	50	100u§	200 §	1.2k	125J	2 †	TO83
51	NLF45S	840	55	89C	100m	70m	3.0	4.0m	125J	3.0 †	500	5.0u	50	30u§	100 §	1.2k	125J	500m†	TO83
52	NLF46S	840	55	89C	100m	70m	3.0	4.0m	125J	3.0 †	500	5.0u	50	30u§	100 §	1.2k	125J	500m†	TO94
53	C151S⊘	840	110	80C	500m	150m	2.5	8.0m	125J	2.6 †	500	8.0u	50	30u§	200 §	1.4k	125J	2.0 †	TO49
54	C153S⊘	840	110	80C	500m	150m	2.5	8.0m	125J	2.6 †	500	8.0u	50	30u§	200 §	1.4k	125J	2.0 †	TO83
55	C150S⊘	840	110	89C	500m	150m	2.5	10m	125J	2.6 †	500	8.0u	50	100u§	200 §	1.8k	125J	2.0 †	TO49
56	C152S⊘	840	110	89C	500m	150m	2.5	10m	125J	2.6 †	500	8.0u	50	100u§	200 §	1.8k	125J	2.0 †	TO83
57	NLF150S	840	110	89C	500m	150m	2.5	10m	125J	2.6 †	500	8.0u	50	100u§	200 §	1.6k	125J	2.0 †	TO94
58	NLF152S	840	110	89C	500m	150m	2.5	10m	125J	2.6 †	500	8.0u	50	100u§	200 §	1.6k	125J	2.0 †	TO83
59	C178S	840	200	64C	500m	300m	2.5	12m	125J	3.5 †	1.5k	8.0u	100	150u§	200 §	2.5k	125J	2.0 †	TO93
60	C181S	840	235	65C	500m	300m	2.5	12m	125J	3.5 †	1.5k	8.0u	100	75u§	200 §	2.5k	125J	2.0 †	TO93
61	C180S⊘	840	235	80C	500m	150m	2.5	6.0m	125J	2.9 †	1.5k	8.0u	100	75u§	200 §	3.5k	125J	2.0 †	TO93
62#	BTX68-800R	880 §	6.4	85B	10m§⊘	30m	3.0	2.5m	125J	2.3	20	3.0u	10	20u		80	125J	5 †	S172
63#	BTX35/800R	880	12	25	10m⊘	65m	3.5	4.0m	125	3.0	50	2.0u		15u			125J		TO48
64#	BTX36/800R	880	12	85B	10m⊘	40m	3.0	4.0m	125	2.0	50	2.0u	50	15u		136 *	125J	5 †	TO48
65	C501T	900			250m	150m	6.5	15m	25J	1.5 †	1.0k†		450	200u§	100 §	7.0k	125J	5.0 †	M464
66	JAN2N4205	900	2.0 △	85C	5.0m⊘	50m	1.5	4.0m	100C	25 †	30		2.0	15u	250 §	100 §	100J	20 ⊘	S17c
67#	BTY79-900R	900 §	6.4	85C	20	30m	3.0	2.5m	125	2.3		3.0u	10	20u		80	125	5.0 ⊘	TO64
68#	TR9010	900	10	25A	50m⊘	80m	3.0	5.0m	125J	2.2	30	2.0u§	10	50u§	50 ⊘§	125		240m	S313
69	10RC90	900	10	65C	10m⊘	15m	2.0	2.0m	105J	2.3	10	3.0u	10		20	125	105J	5 †	TO48
70#	CR6-1003RB	900	10	70C	28m⊘	80m	3.0	5.0m†	100C	2.0	16	2.3u	20	80u	20	100	125	5.0	
71#	CR6-1003RBA	900	10	70C	28m⊘	80m	3.0	5.0m†	100C	2.0	16	2.3u	20	80u	200	100	125	5.0	
72#	BTX47/1000R	900	11.5	85B	10m⊘	65m	3.5	5.0m	125	4.0	50	5.0u	10	50u		155 *	125J	.5 †	S17b
73#	CR12-1003RB	900	14.5	75C	28m⊘	60m	3.0	5.0m†	125C	2.0	32	2.3u	20	85u	20	160	125	5.0	
74#	CR12-1003RBA	900	14.5	75C	28m⊘	60m	3.0	5.0m†	125C	2.0	32	2.3u	20	85u	200	160	125	5.0	
75#	TR9	900	16	25A	50m⊘	80m	3.0	3.0m	125J	2.0	50	2.0u§	10	50u§	50 ⊘	250		240m	S313
76	202V	900	16	58C	10m§⊘	80m	3.5	2.0m	100J	1.6	10					125	100J	50	TO48
77#	BTX48/1000R	900	16	85B	10m⊘	65m	3.5	5.0m	125	2.7	50	5.0u	10	50u		200 *	125J	.5 †	S17b
78#	BTX92-900R	900 §	16	85C	200m	150m	3.5	8.0m	125	2.7	50	2.0u	10		200	280 *	125	5.0 ⊘	TO48
79	203V	900	16	92C		80m	3.7	4.0m	125J	1.6	10					125	125J		TO48
80#	T14F900C	900	17	85C	120m	50m	3.0	10m	125J	2.5	50	1.5u⊘	10	15u§	200 §	200 §	125J		S63g%
81#	T14F900E	900	17	85C	120m	50m	3.0	10m	125J	2.5	50	1.5u⊘	10	15u§	200 §	200 §	125J		M351%
82#	T15N900C	900	19	85C	200m	100m	3.0	10m	125J	2.5	50	2.5u⊘	10	80u§	20 §	300 §	125J		S63g%
83#	T15N900E	900	19	85C	200m	100m	3.0	10m	125J	2.5	50	2.5u⊘	10	80u§	20 §	300 §	125J		M351%
84#	TS935	900	22.5	25A	20m⊘	80m	3.0	6.0m	125J	2.2	70	5.0u§	15	50u§	50 ⊘§	250		240m	S313
85#	CR18-1003RB	900	23	70C	28m⊘	40m	3.0	5.0m†	125C	2.1	57	2.3u	20	85u	20	180	125	5.0	
86#	CR18-1003RBA	900	23	70C	28m⊘	40m	3.0	5.0m†	125C	2.1	57	2.3u	20	85u	200	180	125	5.0	
87#	CR181003RB	900	23	75C	78m	40m	3.0	5.0m	125C	2.1	57				20 ⊘§	180 *§	125J	5.0 ⊘	S278
88#	T18F900C	900	23	85C	120m	50m	3.0	10m	125J	2.3	60	1.5u⊘	15	20u§	50 §	300 §	125J		S63g%
89#	T18F900E	900	23	85C	120m	50m	3.0	10m	125J	2.3	60	1.5u⊘	15	20u§	50 §	300 §	125J		M353%
90	10RC90A	900 ⊘	25 △	45C	10m⊘	90m	2.5	2.0m⊘	125C	2.8	50 †	3.0u	10	30u	25 §	200 △	125J	.50 †	TO48
91	201V	900	25	75C		40m	3.0	4.0m	125J	2.3	50					250	125J		TO48
92#	24TB9	900	25	84B		10	3.0	7.5m		2.3	31					180	125	1.0	S266
93#	26TB9	900	25	84B		10	3.0	7.5m		2.3	31					180	125	1.0	S63a
94#	T22N900C	900	28	85C	200m	100m	3.0	10m	125J	1.9	60	2.5u⊘	20	80u§	20 §	400 §	125J		S63g%
95#	T22N900E	900	28	85C	200m	100m	3.0	10m	125J	1.9	60	2.5u⊘	20	80u§	20 §	400 §	125J		M353%
96#	23TB9	900	31	82B	150m	100m	3.0	7.5m		2.4	63					260	125C	1.0	S266
97#	25TB9	900	31	82B	150m	100m	3.0	7.5m		2.4	63					260	125C	1.0	S63a
98#	TK9	900	35	25A	50m⊘	125m	3.0	10m	100J	2.0	100	5.0u§	100	100u§	50 §	700		375m	S317
99	16RC90	900 ⊘	35 △	35C	20m⊘	40m	3.0	2.0m⊘	125C	2.3	70 †					250 △	125J	.50 †	TO48
100	16RC90A	900 ⊘	35 △	35C	20m⊘	40m	2.0			2.3	70 †		10	75u§	10 §	250 △	125J	.50 †	TO48
101	18RC90	900 ⊘	35 △	45C	20m⊘	40m	2.0	2.0m⊘	125C	2.0	70 †					350 △	125J	.50 †	TO48
102#	BStE0260	900	35	53C	200m	100m	3.0	10m	125J					150u§	20 §	300	125J		S131h
103	C35T△	900	35	64C		40m	3.0								200		125J		TO48
104#	TK9FA	900	35	85C		300m	3.0	10m	125J	2.0	100	3.0u§	100	20u§	100 §	700		900m	S317
105#	TK9FB	900	35	85C		300m	3.0	10m	125J	2.0	100	3.0u§	100	40u§	100 §	700		900m	S317
106▼#	5TCA90	900	35	125	60	100m	3.0							100u	100 §	1.5k	125	10	
107	35C90⊘	900	35	125J	200m§	200m	3.0	10m	125J	2.5	220	10u	35	40u§		900	125J	15 ⊘	TO94#△
108	35C90B	900	35	125J	200m§	200m	3.0	10m	125J	2.5	220	10u	35	40u§	100	900	125J	15 ⊘	TO94#△

SYMBOLS AND CODES EXPLAINED IN INTERPRETER

6. SILICON CONTROLLED RECTIFIERS

IN ORDER OF (1) PEAK REV. VOLT., (2) MAX. CONT. CUR., (3) TEMPERATURE, (4) TYPE No.

LINE No	4 TYPE No.	1 PRV and VBO (V)	MAX. CONT. CURRENT 2 Idc (A)	3 at TEMP (°C)	MAX. HOLD. CUR Ih @ 25°C (A)	MAX. GATE FIRING SPEC at 25°C Igf (A)	Vgf (V)	MAX SAT I Ir@PRV and Is@VBO (A)	at TEMP (°C)	MAX. FWD. VOLT. DROP at 25°C Vf (V)	@ If (A)	SWITCHING TIME at 25°C Ton (s)	for If (A)	Toff (s)	MIN. dV/dt @ 25°C (V/us)	ABS. MAX. RATINGS 1Cy PK SURGE I@25°C (A)	MAX TEMP (°C)	MAX GATE POWER (W)	DWG. No.
1	35C90BF	900	35	125J	200m§	200m	3 0	10m	125J	2.5	220	10u	35	40u§	100	900	125J	15 Ø	TO83#△
2	35C90F	900	35	125J	200m§	200m	3.0	10m	125J	2.5	220	10u	35	40u§		900	125J	15 Ø	TO83#△
3#	CR30-903A	900	36	25	66m	60m	3 0			1 4	30	20u	30	73u		500	125	5.0	TO49
4#	CR30-1004AA	900	38	70C	20mØ	80m	3 0	10m†	125C	2.5	100	20u	100	20u☑	20	660	125	5 0 Ø	TO49
5▼#	6TC90	900	40			100m	3 0			1 3		10u		150u	50 §Ø	1 5k*	125J		S183a
6#	BStF0460	900	40	70C		100m	2 0	5.0m	110J					20u§	50 §	360	110J		S18f
7#	27TB9	900	40	74B		10	3 0	15m		2 1	78					450	125C	1.0	S63a
8#	BStF0560	900	40	78C		100m	2 0	5.0m	120J					150u§	50 §	320	120J		S18f
9#	CR24-1003RB	900	40	80C	28mØ	40m	3.0	5.0m†	125C	1 4	50	2 3u	20	85u	20	320	125	5.0	
10#	CR24-1003RBA	900	40	80C	28mØ	40m	3 0	5.0m†	125C	1.4	50	2.3u	20	85u	200	320	125	5.0	
11#	T30F900C	900	40	85C	300m	100m	3.0	10m	125J	1 8	100	2.0u☑	25	25u§	50 §	800 §	125J		S63g%
12#	T30F900E	900	40	85C	300m	100m	3 0	10m	125J	1.8	100	2 0u☑	25	25u§	50 §	800 §	125J		M351%
13♦	40RCS90	900 ☑	40	87C	200m	110m	3 0	1 5m	105J	1 7 †	40	4 5u	10		25 §	1.0k§	105J	500m†	TO65
14▼#	6TC90	900	40	125	60	100m	3.0							100u	100 §	1 5k	125	10	
15	251V	900	40	125J		100m	3 0	10m	125J	1.7	50	4 0u	50	100u	300	1 2k*	125J	3 †	Z59
16	NLE45T	900	45	89C	50	70m	2 5	4 0m	125J	3.0	500	5 0u	50	30u	100	1.2k	125J	.50 †	TO83
17	NLE46T	900	45	89C	50	70m	2 5	4.0m	125J	3 0	500	5.0u	50	30u	100	1.2k	125J	.50 †	TO94
18#	28TB9	900	47	73B		.10	3 0	15m		1.9	95					550	125	1.0	S63a
19	C146T	900	55 △			100m	3.0							40u☑			125A		S236
20#	29TB9	900	55	68B		10	3 0	15m		1 8	110					650	125	1.0	S63a
21	NL577T	900	55	82C	50	15	3.0	3.0m	125J	2.4	110				200	700	125J	2.0 †	TO103
22	C45T△	900	55	85B	100m	75m	3.0	2 0m△	125J	3 1 △	500					700	125J	5.0	S75
23	C46T△	900	55	85C	100m	75m	3.0	5 0m	125J	3 1 △	500	5.0u	5 0	30u§	15 §	700	125J	.50	TO49
24	36RA90	900 ☑	55 △	90C	500m	150m	2 5	11m	125J	2.2 †	110	2.0u	50	25u§	200 △	1.0k△	125J	2 †	TO94
25	37RA90	900 ☑	55 △	90C	500m	150m	2 5	11m	125J	2.2 †	110	2 0u	50	25u§	200 △	1 0k△	125J	2 †	TO83
26	2192V	900	55	94C		200m	3.0	10m	125J	2 0 §	50	8 0u	50	20u	100	1 2k*	125J	3 †	Z59
27	555T	900	55	99C		150m	3.0								200		125J		TO49
28	556T	900	55	99C		150m	3.0								200		125J		TO83
29#	5TC90	900	55	125	20m	45m	3 0			1 3	50	5.0u	50	25u		500	100J	20	S185
30	C145T	900	55 △	125J	500m	150m	3.0	8.0m	125C	2 4 †	110				200	700 △	125J	2 †	TO103
31▼#	BStG0360	900	60	40A	180m$	300m$	2 0	10m	105J	1.6 $	29	5.0u	38	40u	200	545	105J	2.0	S189C#
32#	BTX49-900R	900 §	60	85C	150m	80m	3.0	15m	125J	3.5	500	5 0u	50	50u		1 0k	125J	1.0 †	TO94
33#	T50F900	900	62.5	85C	300m	100m	3 0	20m	125J	2.2	160	2 0u☑	25	30u§	50 §	800 §	125J		M330b%
34#	T50N900	900	62 5	85C	300m	100m	3 0	20m	125J	2 2	160	2.5u☑	25	80u§	20 §	800 §	125J		M330b%
35	2515V	900	63	120C		.10	3.0	15m	150J	1.7	50				300	1.2k	150J		TO83
36#	CR50-903A	900	64	25	73m	100m	3.0									600	125	5 0	TO49
37▼#	BStG0260	900	65	40A	180m$	300m$	2.0	10m	105J	1.3 $	40	5 0u	42	150u	200	690	105J	2.0	S189C#
38#	40T11	900	65	75B	200m	200m	25	10m		2.1	200					1.1k	125B	1.0	M308
39#	TK190	900	70	25A	50mØ	125m	3.0	10m	125J	2.0	200	5 0u§	100	100u§	50 §	1.0k		375m	S317
40	2N3094	900	70 △	62C		200m$	3 0 $	2 5m	62C	1 9 †	70				20	1 0k§*	125C	.50 †	TO49
41	2N3102	900	70 △	62C		200m$	3 0 $	2.5m	62C	1 9 †	70				20	1.0k§*	125C	.50 †	TO49
42	2N1803	900	70 △	65C		200m$	3 0 $	2.7m	65C	2 0 †	70					1.0k*	125C	.5 †	TO83
43	2N3990	900	70	70C		200m$	3 0 $	15m	125C	2 9 †	220			50u	200 §	1.0k*	125C	10 Ø	TO94
44#	36TB9	900	70	75B		.15	3.0	15m		2.0	140					760	125	1.0	S63d
45#	BTX50-900R	900 §	70	85C	150m	80m	3.0	15m	125J	2.5	500	5.0u	50	50u		1.5k	125J	1 0 †	TO94
46#	TK190FA	900	70	85C		300m	3 0	10m	125J	2.0	200	3 0u§	100	20u§	100 §	1.0k		900m	S317
47#	TK190FB	900	70	85C		300m	3 0	10m	125J	2.0	200	3.0u§	100	40u§	100 §	1.0k		900m	S317
48▼#	10TCA90	900	70	125	100	100m	3 0							100u	100 §	1.5k	125	10	
49	70C90	900	70	125J	200m§	200m	3 0	10m	125J	1.8	220	10u	70	40u§		1 6k	125J	15 Ø	TO94#△
50	70C90B	900	70	125J	200m§	150m	3.0	10m	125J	1 8	220	10u	70	40u§	100	1 6k	125J	15 Ø	TO94#△
51	70C90BF	900	70	125J	200m§	150m	3 0	10m	125J	1 8	220	10u	70	40u§	100	1.6k	125J	15 Ø	TO94#△
52	70C90C	900	70	125J	200m§	100m	2 0	10m	125J	1.8	220	10u	70	40u§		1.6k	125J	15 Ø	TO94#△
53	70C90CF	900	70	125J	200m§	100m	2 0	10m	125J	1 8	220	10u	70	40u§		1.6k	125J	15 Ø	TO83#△
54	70C90F	900	70	125J	200m§	200m	3 0	10m	125J	1 8	220	10u	70	40u§		1.6k	125J	15 Ø	TO83#△
55▼#	12TC90	900	80		100m	100m	3.0			1.5		10u		150u	50 §	1.5k*	125J		S183b
56#	CR31-1003A	900	80	55C	38mØ	60m	3 0	10m†	125C	1 7	100	3.7u	100	130u	20	700	135J	5 0 Ø	TO49
57#	CR31-1004AA	900	80	55C	38mØ	60m	3 0	10m†	125C	1 7	100	5.7u	100	20u☑	20	700	135J	5.0 Ø	TO49
58	36RE90	900 ☑	80 △	75C	500m	150m	2 5	5.0m	125C	2.2 †	160				10 §	1.0k△	125J	2.0 †	TO94
59	37RE90	900 ☑	80 △	75C	500m	150m	2.5	5.0m	125C	2 2 †	160				10 §	1.0k△	125J	2.0 †	TO83
60	36REH90	900 ☑	80 △	100C	500m	150m	2 5	15m	150C	2.1 †	160				10 §	900 △	150J	2.0 †	TO94
61	37REH90	900 ☑	80 △	100C	500m	150m	2.5	15m	150C	2.1 †	160				10 §	900 △	150J	2 0 †	TO83
62▼#	12TCA90	900	80	125	100	100m	3 0							100u	100 §	1 5k	125	10	
63	250V	900	80	125J		100m	3.0	10m	125J	1.3	50	4.0u	50	100u	300	1.6k*	125J	3 †	Z59
64#	37TB9	900	85	66B		.15	3.0	15m		1 9	175					930	125	1 0	S63d
65#	CR70-1001A	900 †	85	75C		100m	3.0	15m	25C	1 7	70				20	1.0k	125C	1.0	TO49
66#	CR70-1001C	900	85	75C		100m	3 0	30m†	125C	1.7	210				20	1 0k	125	5.0	M376
67#	TT9FA	900	95	85C		500m	3.0	25m	125J	2.0	350	3.0u§	100	20u§	100 §	2.0k		1.5	S204a
68#	TT9FB	900	95	85C		500m	3.0	25m	125J	2.0	350	3.0u§	100	40u§	100 §	2 0k		1 5	S204a
69#	TT9	900	100	25A	50mØ	500m	3 0	25m	100J	2.2	350	5 0u§	100	100u§	50 §	2.0k		1 5	S204a
70#	38TB9	900	100	62B		15	3 0	15m		1 8	205					1 0k	125	1 0	S63d
71	100C90	900	100	125J	200m	200m	2.5	25m	125J	2 0	500	10u	100	40u§		2.0k	125J	10 Ø	TO93#△
72	100C90B	900	100	125J	200m	200m	2.5	25m	125J	2.0	500	10u	100	40u§	100	2.0k	125J	10 Ø	TO93#△
73#	CR51-1003A	900	105	55C	38mØ	60m	3 0	10m†	125C	1.6	150	3.4u	120	185u	20	760	135J	5.0	TO49
74#	BStH0460	900	110	46C	180m	100m	2 0	10m	110J					20u§	50 §	1.0k	110J		S189e
75#	BStH0560	900	110	52C	200m	200m	2 0	10m	120J					250u§	50 §	900	120J		S189e
76	809V	900	110	55	100m§Ø	200m	3.0	8.0m	125J	2.0	50					2 0k	125J	5.0	
77	72RE90	900 §	110	60C	15mØ	70m	2.0	2.5mØ	125J	1 8	220					1.4k*	125J	5.0 Ø	TO83
78	72RE90A	900 §#	110	60C	15mØ	70m	2.0	2.5mØ	125J	1.8	220					1 0k△	125J	5.0 Ø	TO83
79	2542V	900 §	110	60C		200m	3.0	10m	125J	1.7 §	50	8.0u	50	20	100	100	125J	3.0 †	Z59
80	C50T△	900	110 △	60B	100m	75m	3.0	6 0m△	125J	2.5	500	5 0u	50	30u§	15 §	1.0k	125	500m	TO94
81	C52T	900	110 △	60B	100m	75m	3 0	6 0m△	125J	2 5	500	5.0u	50	30u§	15 §	1 0k	125	500m	S315
82	71RB90	900 ☑	110 △	65C	500m	150m	2 5	11m	125J	2.5 †	220	2.0u	50	30u§	200 △	1.2k△	125J	2 †	TO94
83	71REB90	900 ☑	110 △	65C	500m	150m	2 5	5 0m	125J	2.5 †	220	2.0u	50	30u§	200 △	1 0k△	125J	2 †	TO94
84	72RB90	900 ☑	110 △	65C	500m	150m	2 5	11m	125J	2.5 †	220	2 0u	50	30u§	200 △	1 2k△	125J	2 †	TO83
85	72REB90	900 ☑	110 △	65C	500m	150m	2 5	5 0m	125J	2.5 †	220	2 0u	50	30u§	200 △	1.2k△	125J	2 †	TO83
86	C150T△	900	110 △	65C	500m	150m	2.5	18m	120C	2 6	500	8 0u	50	100u§	200	1.5k	125J	10	TO94
87	C151T△	900	110 △	70C	500m	150m	3 0	18m	120C	3 5	500	8.0u	50	50u§	200	1.0k	125J	10	S91
88	C152T△	900	110 △	70C	500m	150m	3.0	18m	120C	2 6	500	8.0u	50	100u§	200	1.5k	125J	10	S315
89	C153T△	900	110 △	70C	500m	150m	3 0	18m	120C	3 5	500	8 0u	50	50u§	200	1.0k	125J	10	S108
90	71RA90	900 ☑	110 △	80C	500m	150m	2 5	11m	125J	1.9 †	220	2 0u	50	50u§	200 △	1 6k△	125J	2 †	TO94
91	71REA90	900 ☑	110 △	80C	500m	150m	2 5	5.0m	125J	1 9 †	220	2.0u	50	50u§	200 △	1.6k△	125J	2 †	TO94
92	72RA90	900 ☑	110 △	80C	500m	150m	2 5	11m	125J	1 9 †	220	2 0u	50	50u§	200 △	1 6k△	125J	2 †	TO83
93	72REA90	900 ☑	110 △	80C	500m	150m	2.5	5 0m	125J	1 9 †	220	2.0u	50	50u§	200 △	1.6k△	125J	2 †	TO83
94	NLE151T	900	110	80C	50	15	2 5	8 0m	125J	2.6	500	8.0u	50	50u	200	1.4k	125J	2.0 †	TO94
95	NLE153T	900	110	80C	.50	15	2 5	8 0m	125J	2.6	500	8 0u	50	50u	200	1.4k	125J	2 0 †	TO83
96	NLF151T	900	110	80C	500m	150m	2 5	8 0m	125J	2.6 †	500	8.0u	50	50u☑	200	1.4k	125J	2.0 †	TO94
97	NLF153T	900	110	80C	500m	150m	2 5	8 0m	125J	2 6 †	500	8.0u	50	50u☑	200	1 4k	125J	2.0 †	TO83
98	NLF158T	900	110	83C	500m	150m	2 5	8.0m	125J	3 0 †	500	5.0u	50	40u§	200	1.4k	125J	2 0 †	TO94
99	NLF159T	900	110	83C	500m	150m	2.5	8 0m	125J	3 0 †	500	5.0u	50	40u☑	200	1.4k	125J	2 0 †	TO83
100	NLE150T	900	110	89C	.50	15	2 5	4.0m	125J	2.6	500	8.0u	50	150u	200	1.6k	125J	2 0 †	TO94
101	NLE152T	900	110	89C	.50	.15	2 5	4.0m	125J	2.6	500	8.0u	50	150u	200	1.6k	125J	2.0 †	TO83
102	NLH150T	900	110	89C	50	15	2 5	4 0m	125J	2.6	500	8 0u	50	150u	200	1.6k	125J	2.0 †	TO94
103	NLH152T	900	110	89C	.50	.15	2 5	4.0m	125J	2.6	500	8.0u	50	150u	200	1.6k	125J	2.0 †	TO83
104	71REJ90	900 ☑	110 △	90C	500m	150m	2.5	15m	150J	2.5 †	220	2.0u	50	50u§	50 △	1.0k△	150J	2 0 †	TO94
105	72REJ90	900 ☑	110 △	90C	500m	150m	2.5	15m	150J	2.5 †	220	2.0u	50	50u§	50 △	1.0k△	150J	2 †	TO94
106	NLC150T	900	110	90C	.50	15	2 5	6.0m	125J	2.6	500	8.0u	50	100u	200	1.8k	125J	2.0 †	TO49
107	NLC152T	900	110	90C	.50	.15	2 5	6.0m	125J	2.6	500	8.0u	50	100u	200	1.8k	125J	2.0 †	TO83
108	NLC350T	900	110	90C	.50	.15	2 5	8.0m	125J	2 6	500	8 0u	5.0	100u	200	1.8k	125J	2 0 †	M456
109	71REH90	900 ☑	110 △	105C	500m	150m	2 5	15m	150J	1.9 †	220	2.0u	50	60u§	50 △	1.4k△	150J	2 †	TO94
110	72REH90	900 ☑	110 △	105C	500m	150m	2.5	15m	150J	1.9 †	220	2.0u	50	60u§	50 △	1.4k△	150J	2 †	TO83

SYMBOLS AND CODES EXPLAINED IN INTERPRETER

6. SILICON CONTROLLED RECTIFIERS

IN ORDER OF (1) PEAK REV. VOLT., (2) MAX. CONT. CUR., (3) TEMPERATURE, (4) TYPE No.

LINE No.	4 TYPE No.	1 PRV and VBO (V)	MAX. CONT. CURRENT 2 Idc (A)	3 at TEMP (°C)	MAX. HOLD. CUR Ih @ 25°C (A)	MAX. GATE FIRING SPEC at 25°C Igf (A)	Vgf (V)	MAX SAT I Ir@PRV and Is@VBO (A)	at TEMP (°C)	MAX. FWD. VOLT DROP at 25°C Vf (V)	@ If (A)	SWITCHING TIME at 25°C Ton (s)	for If (A)	Toff (s)	MIN. dV/dt @ 25°C (V/us)	ABS. MAX. RATINGS 1Cy PK SURGE I@25°C (A)	MAX TEMP (°C)	MAX GATE POWER (W)	DWG. No.
1#	10TC90	900	110	125	20m	60m	3.0			1.5	110	5.0u	110	25u		1 1k	125J	20	S185
2	C158T	900	110 △	125J	500m	150m	3 0	12m	125C	3.5 †	500				200 §	1 2k△	125J	2 0 †	TO94
3	C159T	900	110 △	125J	500m	150m	3 0	12m	125C	3 5 †	500				200 §	1.2k△	125J	2 0 †	S315
4#	T95F900	900	115	85C	300m	100m	3.0	30m	125J	1.8	300	2 5u⊘	50	30u§	50 §	2 0k§	125J		M330a%
5#	CR100-1001C	900 †	124	80C		100m	3 0	15m	25C	1.7	100				20	1 2k	125C	1 0	M376
6#	CR100-1001D	900	125	80C	30m⊘	100m	3 0	30m†	125C	1.7	300			100	20	1.5k	125	5.0	TO49
7	2505V	900	125	95C		10	3.0	15m	150J	1 3	50				300	1.6k	150J		TO83
8#	42TB9	900	135	57B		20	3.0	15m		2.2	265					1 4k	125	1 5	M308
9♦#	30TC90	900	140		150m	100m	3 0			1 5					50 §⊘	3 5k*	125J		S348
10▼#	20TCA90	900	140	125	150	100m	3 0							100u	100 §	3 0k	125	10	
11#	TT290	900	150	25A	50m⊘	500m	3 0	25m	125J	1.7	450	5 0u§	100	100u§	50 §	3 2k		1 5	S204a
12▼#	BStL2460	900	150	50C	150m	300m	2.0	10m	110J	1 8	450			25u⊘	50 §	2.5k	110	50	
13▼#	BStL2560	900	150	55C	150m	300m	2 0	10m	120J	2 0	450				50 §	2 3k	120	20	
14#	TT290FA	900	150	85C		500m	3 0	25m	125J	2 0	450	3 0u§	100	20u§	100 §	3 2k		1.5	S204a
15#	TT290FB	900	150	85C		500m	3 0	25m	125J	2 0	450	3 0u§	100	40u§	100 §	3 2k		1 5	S204a
16	150C90	900	150	125J	200m	200m	2 5	25m	125J	1 7	500	10u	150	40u§		3 0k△	125J	10 ⊘	TO93#△
17	150C90B	900	150	125J	200m	200m	2 5	25m	125J	1.7	500	10u	150	40u§	100	3 0k△	125J	10 ⊘	TO93#△
18	101RA90	900 ⊘	160 △	80C	500m	150m	2 5	18m	125J	2.1 †	314	2 0u	150	35u§	200 △	2 0k△	125J	2 †	TO93
19	101RE90	900 ⊘	160 △	80C	500m	150m	2 5	8 0m	125J	2 1 †	314	2 0u	150	35u§	4.0 △	2 0k△	125J	2 †	TO93
20#	43TB9	900	175	62B		20	3 0	15m		2.2	390					1 9k	125	1.5	M308
21	2N3893	900	175	80	200m	400m	4 0	15m	125	1 8	175					4.5k	125	3.0	TO93
22	C350T	900	175	80C	500m	150m	3 0	9 0m	25	2 6	500	8.0u	50	100u	200	1 5k	120C	2.0	M514
23	2202V	900	175	125J		300m	4 0	15m	125J	1 3 §	100	8 0u	100	40u	100	4 0k*	125J	3.0 †	TO93
24	C358T	900	180 △	125J	500m	150m	3 0	12m	125C	3.5	500	2.0u	50	30u⊘	200	1 2k	125J	2 0	M514
25▼#	BStL0260	900	190	40A	180m$	300m$	2 0	10m	115J	1.3 $	250	5 0u	120	150u	200	2 8k	115J	2 0	S251#
26#	46TB9	900	195	56B		20	3.0	15m		2.0	390					2 1k	125	1 5	M308
27	261V	900	200	80		.15	3 0	15m	125J	1.4	100				300	3 3k	125		TO93
28	2182V	900	200	80C		300m	4 0	15m	125J	1.3 §	100	8 0u	100	30u	100	3 3k*	125J	3 †	TO93
29	263V	900	200	85		.15	3 0	15m	125J	1 3	50				300	1 6k	125		M414
30#	TT390	900	200	85C	40m⊘	500m	3.0	25m	125J	1.6	600	5 0u§		100u§	100 ⊘§	4 0k		1 5	S204a
31▼#	30TCA90	900	200	125	150	100m	3 0								100 §	5 5k	125	10	
32#	CR155-1004NA	900	210	70C	35m⊘	150m	3 5	30m†	125C	1.8	450			35u⊘	100	2 1k	125	5 0 ⊘	M201
33#	CR153-1003A	900	220	70C	35m⊘	150m	3.5	30m†	125C	1 6	450				100	3.0k	125	5.0 ⊘	M201
34#	20TC90	900	220	125	50m	100m	3 0			1 5	200	5 0u	200	30u		2 5k	125J	20	S183
35#	CR152-1003A	900	230	70C	35m⊘	150m	3 5	30m†	125C	1 5	450				100	3 1k	125	5 0	M201
36	151RB90	900 ⊘	235 △	75C	500m	150m	2 5	18m	125J	2.2 †	471	2 0u	150	40u§	200 △	2 5k△	125J	2 †	TO93
37	151REB90	900 ⊘	235 △	75C	500m	150m	2.5	8 0m	125J	2.2 †	471	2 0u	50	40u§	200 △	2 5k△	125J	2 †	TO93
38	C180T△	900	235 △	80C	500m	150m	3 0	9 0m	25	2 9 †	1 5k	8 0u	100	75u	200	3 5k	125C	2 0	TO93
39	NLF180T	900	235 △	80C	500m	150m	2 5	4.0m	125J	2.8	1 5k	8.0u	100	80u	200	3 5k	125J	2 0 †	TO93
40	151RA90	900 ⊘	235 △	85C	500m	150m	2 5	18m	125J	1.8 †	471	2 0u	150	60u§	200 △	3 5k△	125J	2 †	TO93
41	151REA90	900 ⊘	235 △	85C	500m	150m	2 5	8 0m	125J	1.8 †	471	2 0u	50	60u§	200 △	3 5k△	125J	2 †	TO93
42♦	C280T	900	235	85C	100m	150m	3 0			1 4	500	10u	5 0	250u§	100 §	3 5k	125J	3 0	S132
43▼	C281T	900	235	85C	100m	150m	3 0			1.4	500	10u	5 0	250u§	100 §	3 5k	125J	3 0	S247a
44#	CR151-1003A	900	240	70C	35m⊘	150m	3 5	30m†	125C	1.4	450				100	3 3k	125	5 0	M201
45	2N3362	900	250	80C	200m§	400m§	4 0 §	15m	125C	2.0 §	250					5.0k§*	125C	3 0 †	TO108
46#	T250F900	900	250	85C	300m	200m	2.0	50m	125J	1 7	500	3.0u	100	30u§	400 §	5 5k§	125J	150	M387
47#	61TB9	900	275	67B		30	3 0	40m		2 4	665					3.2	125	2 0	M308a
48	260V	900	275	80		.15	3 0	15m	125J	1 2					300	3 3k	125		TO93
49♦#	40TC90	900	300		150m	100m	3 0			1 5					50 §⊘	4 5k*	125J		S348
50	273V	900	300	70		15	3 0	15m	125J	1 3	100				300	3 3k	125		M414
51▼#	40TCA90	900	300	125	150	100m	3.0								100 §	5 5k	125	10	
52	2232V	900	300	125J		300m	4 0	15m	125J	1.3 §	100	8 0u	100	40u	100	4.5k*	125J	3 0 †	M247
53	2248V	900	300	125J		300m	4 0	10m	125J	1 0 §	100	5 0u	150	50u	100	5 0k*	125J	3.0 †	M308c
54▼#	BStN0260	900	315	40A	180m$	300m$	2 0	10m	115J	1.4 $	520	5 0u	200	150u	200	6.9k	115J	2.0	S251A#
55#	62TB9	900	315	65B		30	3 0	40m		2 2	665					3 7k	125	2 0	M308a
56#	CR253-1003A	900	320	40C	35m⊘	150m	3 5	30m†	125C	1 6	450				100	3 5k	125	5 0 ⊘	M201
57#	CR252-1003A	900	336	50C	35m⊘	150m	3 5	30m†	125C	1 5	450				100	3 6k	125	5.0	M201
58▼#	BStN1560	900	350	64C	150m	300m	2.0	15m	125J	1 9	1 0k				200 §	5 1k	125	20	
59#	70TB9	900	355	67B		30	3 0	40m		2.2	850					4 1	125	2.0	M308a
60	C380T	900	380	65C	500m	150m	3 0 §	9 0m	25C	2.8	1 5k	8 0u	100	100u	200	3.5k	120	2 0	M514
61	2N3539	900	400	20A	200m§	400m	4.0	15m	125J	1 9	250					5.0k	125J	16	M247
62#	71TB9	900	400	65B		.30	3 0	40m		2.0	850					4 6k	125	2 0	M308a
63	250RA90	900 ⊘	400 △	75C	100m	150m	3 0	23m	125J	1 7 †	785	5 0u	250	40u§	100 △⊘	5 0k△	125J	3 †	TO118
64#	73TB9	900	430	64B		30	3.0	40m		2 0	1 0k					5 1k	125	2 0	M308a
65#	CR7K1003A45	900	435	65C	55m⊘	150m	3 5	50m	125J	1 8	1 0k	3 5u	600	180u	100	6 0k	125J	5 0 ⊘	M308b
66#	BStN2360	900	440	33C	180m	300m	2 0	10m	115J					40u§	20 §	4 7k	115J		S301
67#	BStN2560	900	440	41C	180m	300m	2 0	10m	120J					250u§	50 §	5.1k	120J		S301
68#	CR7K1003A4	900	460	65C	55m⊘	150m	3 5	50m	125J	1 7	100	3 5u	600	180u	100	6 4k	125J	5 0 ⊘	M308b
69	276V	900	470			.15	3 0	15m	125J	1 2	100				300	5 5k	125		M247
70#	74TB9	900	470	63B		300m	3 0	40m		1 8	1 0k					5 6k	125	2 0	M308a
71♦	C290T	900	470	65C	100m	150m	3 5			1 2	500	10u	5 0	250u§	100 §	5.5k	125J	3 0	S132
72♦	C291T△	900	470	65C	100m	150m	3 5			1 2	500	10u	5 0	250u§	100 §	5 5k	125J	3 0	S247a
73	C291T⊘	900	470	66C	100m	150m	3 0	15m	125J	1 2 †	500	5 0u	5 0	100u§	100 §	5 5k	125J	3 0 †	M331a
74	300RB90	900	470	68C	100m	150m	3 0	22m	125J	1 6	470	5 0u	50	40u§	25 ⊘§	5 5k*	125J	3 0	S158a
75	272V	900	470	71		15m	3 0	15m	125J	1 2	100				300	5 5k	125		M414
76	300RA90	900 ⊘	470 △	75C	100m	150m	3 0	22m	125J	1 4 †	945	5 0u	250	50u§	100 ⊘△	5 5k△	125J	3 †	TO118
77	NLF291T	900	470 △	125J	100m	150m	2 5	15m	125J	1 2	500	5 0u	100	100u§	100 §	5 5k△	125J	2 0 †	M436%
78#	CR7K1003A35	900	480	65C	140m	150m	3 5	50m	125J	1 6	1 0k	3 5u	600	180u	100	6 9k	125J	5.0 ⊘	M308b
79#	80TB9	900	510	59B		.30	3 0	40m		1 5	1 2k					6 4k	125	2 0	M308a
80#	CR7K1003A3	900	520	55C	140m	150m	3 5			1 5	1 0k					7.0k	125J	5 ⊘	M308b
81▼	NLC501T	900	550	25	250m	150m	6 5 §			1.5	1 0k			200u§	100 §	7.0k	125J	5.0 †	M593
82#	81TB9	900	550	56B		.30	3 0	40m		1.7	1 2k					7 0k	125	2 0	M308a
83	350RA90	900	550	65C	100m	150m	3.0	22m	125J	1 4	550	5 0u	50	100u§	100 §⊘	6 2k△	125J	3 0	S158a
84▼	C387T	900	550 △	65	500	150	3 0	45	125	4.2	3 0k	2.0		30	200	5 5k	125	40	
85▼	C388T	900	550 △	65	500	150	3 0	45	125	4.2	3 0k	2 0		20	200	5 5k	125	40	
86	270V	900	550	67		15	3 0	15m	125J	1 2	500				300	6 5k	125		S295
87#	CR9K1003A25	900	600	65C	55m⊘	150m	3 5	50m	125J	1.3	1 0k	3.5u	600	180u	100	900	125J	5 0 ⊘	M308b
88	C507T	900	625 △	125J	100m	150m	4 0	50m	125C	1.4	500	5 0u	25	100u⊘	100	6 5k	125J	26	M464
89	C508T	900	625 △	125J	100m	150m	4 0	50m	125C	1.3	500	5 0u	25	60u⊘	100	9 0k	125J	26	M464
90#	2WDCR152-903B	900	700 △	40B	60m⊘	150m	3 5	30m	125J	2.1	775				100	3.1k	125J		
91#	BStP1260	900	700	63C	220m	300m	2 0	20m	115J	1 5	1.2k				50	11k	115J	20	M482
92▼	C397T	900	700 △	65	500	150	3 0	45	125	2.9	3 0k	2 0		45	200	7 5k	125	40	
93♦	C398T	900	700 △	65	500	150	3 0	45	125	2 9	3 0k	2 0		30	200	7.5k	125	40	
94#	BStP0360	900	1 0k	34C	180m	300m	2 0	20m	110J					40u§	20 §	9.5k	110J		M482
95#	BStP0560	900	1 0k	39C	300m	300m	2 0	20m	115J					250u§	50 §	10k	115J		M482
96#	2WDCR7K903B35	900	1 2k△	40B	80m⊘	150m	3 5	50m	125J	2.0	1 3k				100	7.5k	125J		
97#	40T12	950	65	75B	200m	200m	25	10m		2 1	200					1 1k	125B	1 0	M308
98	C36N⊘	960	16	52C	20m⊘	80m	3 0	2 0m⊘	100J	2 7 †	50	1.4u	5.0	20u§	100 §	125	100J	.50 †	TO48
99	NL511-3	960	16	70C	20m⊘	80m	3.0	2 0m⊘	100J	2 5	30	3 0u	10	12u	20	150	100J	5.0	TO48
100	C37N⊘	960	25	37C	20m⊘	80m	3 0	2 0m⊘	105J	2 3 †	30	1 4u	5.0			175	105J	.50 †	TO48
101	C40N	960	35	62C	10m⊘	40m	2 5	2 0m⊘	125J	2 0 †	50	1 4u	5.0	8 0u	20 §	150	125J	.5 †	TO48
102	C45N⊘	960	55	89C	100m	70m	3.0	4 0m	125J	3 0 †	500	5 0u	50	30u§	100 §	1 2k	125J	50 †	TO83
103	C46N⊘	960	55	89C	100m	70m	3 0	4 0m	125J	3 0 †	500	5 0u	50	30u§	100 §	1 2k	125J	.50 †	TO49
104	NL555N	960	55	89C	300m	150m	2 5	10m	125J	3 5 †	500	8 0u	50	100u§	200 §	1 2k	125J	2 †	TO49
105	NL556N	960	55	89C	300m	150m	2 5	10m	125J	3 5 †	500	8 0u	50	100u§	200 §	1.2k	125J	2 †	TO83
106	NLF45N	960	55	89C	100m	70m	3 0	4 0m	125J	3 0 †	500	5.0u	50	30u§	100 §	1.2k	125J	500m†	TO83
107	NLF46N	960	55	89C	100m	70m	3 0	4 0m	125J	3.0 †	500	5 0u	50	30u§	100 §	1 2k	125J	500m†	TO94
108	C50N⊘	960	110	77C	100m	70m	2 5	4 0m	125J	2 5 †	500	5 0u	50	30u§	100 §	1 6k	125J	.50 †	TO49

SYMBOLS AND CODES EXPLAINED IN INTERPRETER

6. SILICON CONTROLLED RECTIFIERS

IN ORDER OF (1) PEAK REV. VOLT., (2) MAX. CONT. CUR., (3) TEMPERATURE, (4) TYPE No.

LINE No.	4 TYPE No	1 PRV and VBO (V)	MAX. CONT CURRENT 2 Idc (A)	3 at TEMP (°C)	MAX. HOLD. CUR Ih @ 25°C (A)	MAX. GATE FIRING SPEC at 25°C Igf (A)	Vgf (V)	MAX SAT I Ir@PRV and Is@VBO (A)	at TEMP (°C)	MAX. FWD. VOLT. DROP at 25°C Vf (V)	@ If (A)	SWITCHING TIME at 25°C Ton (s)	for If (A)	Toff (s)	MIN. dV/dt @ 25°C (V/us)	ABS. MAX. RATINGS 1Cy PK SURGE I@25°C (A)	MAX TEMP (°C)	MAX GATE POWER (W)	DWG. No.
1	C151N∅	960	110	80C	500m	150m	2 5	8 0m	125J	2 6 †	500	8 0u	50	30u§	200 §	1.4k	125J	2 0 †	TO49
2	C153N∅	960	110	80C	500m	150m	2 5	8 0m	125J	2 6 †	500			30u§	200 §	1.4k	125J	2 0 †	TO83
3	C150N∅	960	110	89C	500m	150m	2 5	10m	125J	2.6 †	500			100u§	200 §	1.8k	125J	2.0 †	TO49
4	C152N∅	960	110	89C	500m	150m	2 5	10m	125J	2.6 †	500			100u§	200 §	1.8k	125J	2 0 †	TO83
5	NLF150N	960	110	89C	500m	150m	2 5	10m	125J	2.6 †	500	8 0u	50	100u§	200 §	1.6k	125J	2 0 †	TO94
6	NLF152N	960	110	89C	500m	150m	2.5	10m	125J	2.6 †	500	8 0u	50	100u§	200 §	1.6k	125J	2 0 †	TO83
7	C178N	960	200	64C	500m	300m	2 5	12m	125J	3 5 †	1 5k	8 0u	100	150u§	200 §	2.5k	125J	2 0 †	TO93
8	C181N	960	235	65C	500m	300m	2 5	12m	125J	3.5 †	1 5k	8 0u	100	75u§	200 §	2.5k	125J	2 0 †	TO93
9	C180N∅	960	235	80C	500m	150m	2.5	6 0m	125J	2 9 †	1 5k	8.0u	100	75u§	200 §	3.5k	125J	2 0 †	TO93
10#	CS0.6-10	1.0k	650m		20m	10m	3 0			1.4	2.0			60u	200	35	125	10	
11#	CS1-10	1 0k	650m		50m	30m	3 0	1.0m	125	1 4	4.0			60u	200	55	125	10	
12	JAN2N4206	1.0k	2 0 △	85C	5.0m∅	50m	1 5	4 0m	100C	25 †	30		2.0	15u	250 §	100 §	100J	20 ∅	S17c
13#	CS5-10	1 0k	6 2	100	50m	30m	3 0	3.0m	125	1.7	20			60u	200	110	125	10 -	
14#	BTY79-1000R	1 0k	6 4		10m§	25m§	2 5	2.5m	125J	2 3	20	3.0u§	10	15u§	100 §	50	125J	500m†	S63f
15#	BTX68-1000R	1.0k§	6 4	85B	10m§∅	30m	3.0	2.5m	125J	2.3	20	3.0u	10	20u		80	125J	.50 †	S172
16#	BTX31-1000	1 0k	7 5	85	15m	15m	3 0	1.5m	125	1.7	10					100	125	5 0	TO48
17#	BTX31S1000	1.0k	7.5	85	15m	15m	3 0	1.5m	125	1.7	10			12u		100	125	5 0	TO48
18#	BTX71-1000	1.0k	7 5	85	40m	40m	3 0	1 5m	125	1 7	10	1.4u	5 0	20u		100	125	5 0	TO48
19#	BTX71S1000	1 0k	7 5	85	40m	40m	3.0	1 5m	125	1.7	10	1 4u	5 0	12u		100	125	5.0	TO48
20#	CS8-10	1 0k	8 2	100	50m	30m	3.0	3.0m	125	1.6	26			60u	200	170	125	10	
21#	TR1010	1.0k	10	25A	50m∅	80m	3.0	5 0m	125J	2.2	30	2 0u§	10	50u§	50 ∅§	125		240m	S313
22#	2SF453	1.0k	10	63C	10m∅	30m	2 5	3.0m∅	100J	1.2	10					90	100J	5 0 ∅	S141b
23	10RC100	1.0k	10	65C	10m∅	15m	2 0	1 5m	105J	2 3	10	3.0u	10		20	125	105J	.50 †	TO48
24#	CR6-1103RB	1 0k	10	70C	28m∅	80m	3 0	5.0m†	100C	2.0	16	2 3u	20	80u	20	100	125	5.0	
25#	CR6-1103RBA	1 0k	10	70C	28m∅	80m	3 0	5.0m†	100C	2 0	16	2 3u	20	80u	200	100	125	5.0	
26#	BTX32-1000	1 0k	10	85	25m	25m	3 0	1 5m	125	2 0	15					120	125	5.0	TO48
27#	BTX32S1000	1.0k	10	85	25m	25m	3 0	1.5m	125	2 0	15			12u		120	125	5.0	TO48
28#	BTX72-1000	1.0k	10	85	40m	40m	3 0	1.5m	125	2.0	15	1 4u	5.0	20u		120	125	5.0	TO48
29#	BTX72S1000	1 0k	10	85	40m	40m	3.0	1.5m	125	2 0	15	1 4u	5.0	12u		120	125	5.0	TO48
30#	2SF718	1 0k	11	50B		40m	3 0	4.5m	100J	2.8	50				100	125	100J	500m	S18c
31#	CR10-1001B	1 0k†	12	85C	150m	80m	3.0			1.7	10	2 0u	10	30u			125	5.0	TO48
32#	CR12-1103RB	1 0k	14 5	75C	28m∅	60m	3 0	5 0m†	125C	2 0	32	2 3u	20	85u	20	160	125	5.0	
33#	CR12-1103RBA	1.0k	14 5	75C	28m∅	60m	3.0	5.0m†	125C	2.0	32	2.3u	20	85u	200	160	125	5.0	
34#	BTX70-1000	1 0k	15	85	50m	50m	3.0	1 5m	125	2.0	20					150	125	5.0	TO48
35#	BTX70S1000	1 0k	15	85	50m	50m	3 0	1 5m	125	2 0	20			12u		150	125	5 0	TO48
36#	BTX74-1000	1 0k	15	85	50m	50m	3 0	1 5m	125	2.0	20	1.4u	10	20u		150	125	5.0	TO48
37#	BTX74S1000	1 0k	15	85	50m	50m	3 0	1 5m	125	2.0	20	1 4u	10	12u		150	125	5 0	TO48
38#	TR10	1.0k	16	25A	50m∅	80m	3 0	3.0m	125J	2.0	50	2 0u§	10	50u§	50 ∅	250		240m	S313
39#	SF10N11	1.0k	16	26C	100m	80m	3 5	4 0m	100J	3.0	50					113	100J	5.0 ∅	S341
40	202Z	1.0k	16	58C	10m§∅	80m	3 5	2 0m	100J	1.6	10					125	100J	50	TO48
41♦#	BStC0366	1.0k	16	59C	30m	30m	2.5	3 0	125J	1 9	27				200	180 §	125	10	
42	511-4	1 0k	16	70C		80m	3 0								200		100J		TO48
43#	11RC100	1.0k	16 △	85B	20m	40m	3 0	1 5m		2 3	10	3.0u	10	25u	20	125	125A	5.0 ∅	S141c
44♦#	BStD0366	1.0k	16	85C	30m	30m	2 5	3.0	125J	1.6	33				200	250 §	125	10	
45#	BTX92-1000R	1 0k§	16	85C	200m	150m	3.5	8.0m	125	2.7	50	2.0u	10		200	280 *	125	5.0 ∅	TO48
46	203Z	1 0k	16	92C		80m	3 7	4 0m	125J	1.6	10					125	125J		TO48
47#	T15N1000C	1.0k	19	85C	200m	100m	3 0	10m	125J	2 5	50	2 5u∅	10	80u§	20 §	300 §	125J		S63g%
48#	T15N1000E	1 0k	19	85C	200m	100m	3.0	10m	125J	2.5	50	2.5u∅	10	80u§	20 §	300 §	125J		M351%
49#	CS16-10	1 0k	19	95	50m	80m	3.0	3 0m	125	1.8	60			60u	200	350	125	10	
50▼#	CR20A20	1.0k	20	57C		50m	3 0	3.0m	100J	1 8	60					300 △	100J	5 0 ∅	S106b
51#	2SF459	1 0k	20	58C	10m∅	50m	3.5	3.0m∅	100	1.3	20					300	100J	5 0 ∅	S106b
52#	BTX33-1000	1.0k	20	70	50m	50m	3 0	1 5m	125	1.7	30					175	125	5 0	TO48
53#	BTX33S1000	1 0k	20	70	50m	50m	3 0	1.5m	125	1.7	30			12u		175	125	5.0	TO48
54#	CR20F20	1.0k	20	86C		50m	3.0	4.0m	125J	1.8	60				50 △	300 △	125J	5.0 ∅	S106b
55	2N5206	1 0k	22	40A	200m§	80m§	3 0 §	2.0m	125A	2.3	70				100 §	300	125A	500m†	TO48
56#	2SF728	1.0k	22	64B		40m	3 0	4.5m	125J	2 0	50				100	150	125J	500m	S18c
57#	TS1035	1 0k	22 5	25A	20m∅	80m	3 0	6.0m	125J	2.2	70	5.0u§	15	50u§	5C ∅§	250		240m	S313
58#	CR18-1103RB	1.0k	23	70C	28m∅	40m	3.0	5 0m†	125C	2.1	57	2.3u	20	85u	20	180	125	5.0	
59#	CR18-1103RBA	1.0k	23	70C	28m∅	40m	3 0	5.0m†	125C	2 1	57	2 3u	20	85u	200	180	125	5 0	
60#	CR181103RB	1 0k	23	75C	78m	40m	3.0	5.0m	125C	2.1	57				20 ∅§	180 *§	125J	5.0 ∅	S278
61	10RC100A	1 0k∅	25 △	45C	10m∅	90m	2 5	1.5m∅	125C	2 8	50 †	3 0u	10	30u	25 §	200 △	125J	.50 †	TO48
62#	SF16N11	1 0k	25	57C		40m	3.0	8.0m	125J	1.9	50					135	125J	50 †	S18
63#	BTX73-1000	1.0k	25	60	50m	50m	3 0	1.5m	125	1.7	30	1.4u	10	20u		200	125	5.0	TO48
64#	BTX73S1000	1.0k	25	60	50m	50m	3.0	1.5m	125	1.7	30	1 4u	10	12u		200	125	5 0	TO48
65#	21RC100	1 0k	25 △	75B	20m	40m	3.0	1.0		2.2	16	3.0u	10	25u	20	150	125A	5.0 ∅	S141c
66	201Z	1 0k	25	75C		40m	3 0	4 0m	125J	2 3	50					250	125J		TO48
67#	CS22-10	1.0k	25	75	200m	100m	3.0	10m	125	2.1	70			80u	200	400	125	75	
68#	24TB10	1 0k	25	84B		10	3 0	7.5m		2.3	31					180	125	1.0	S266
69#	26TB10	1 0k	25	84B		10	3 0	7.5m		2.3	31					180	125	1.0	S63a
70#	T22N1000C	1 0k	28	85C	200m	100m	3 0	10m	125J	1 9	60	2 5u∅	20	80u§	20 §	400 §	125J		S63g%
71#	T22N1000E	1.0k	28	85C	200m	100m	3 0	10m	125J	1 9	60	2.5u∅	20	80u§	20 §	400 §	125J		M353%
72#	CR30-10	1 0k	30	50	20	2.0	10		125	1 8	100	4 5u	30	25u	20	350	125	5.0	S314
73#	23TB10	1 0k	31	82B	200m	100m	3.0	7.5m		2.4	63					260	125C	1.0	S266
74#	25TB10	1.0k	31	82B	200m	100m	3 0	7.5m		2.4	63					260	125C	1 0	S63a
75	C137P	1 0k	35 △	18C	100m	40m	3.0 §	3.5m	120C	2.3	70				100	360	120J	2.0 †	TO48
76#	TK10	1.0k	35	25A	50m∅	125m	3 0	10m	100J	2.0	100	5 0u§	100	100u§	50 §	700		375m	S317
77	16RC100	1.0k∅	35 △	35C	20m∅	40m	3 0	1.0m∅	125C	2.3	70 †					250 △	125J	.50 †	TO48
78	16RC100A	1 0k∅	35 △	35C	20m∅	40m	2 0			2.3	70 †		10	75u§	10 §	250 △	125J	.50 †	TO48
79	18RC100	1.0k∅	35 △	45C	20m∅	40m	2.0	1.5m∅	125C	2.0	70 †					350 △	125J	.50 †	TO48
80	C35T∅	1.0k	35	62C	10m∅	40m	2 5	2.0m∅	125J	2.0 †	50	1.4u	5.0	30u§	20 §	200	125J	500m†	TO48
81	C35P△	1.0k	35	64C		40m	3.0								200		125J		TO48
82#	TK10FA	1 0k	35	85C		300m	3 0	10m	125J	2.0	100	3.0u§	100	20u§	100 §	700		900m	S317
83#	TK10FB	1.0k	35	85C		300m	3.0	10m	125J	2.0	100	3.0u§	100	40u§	100 §	700		900m	S317
84▼#	5TCA100	1.0k	35	125	60	100m	3.0							100u	100 §	1.5k	125	10	
85	35C100∅	1 0k	35	125J	200m§	200m	3.0	10m	125J	2.5	220	10u	35	40u§		900	125J	15 ∅	TO94#△
86	35C100B	1.0k	35	125J	200m§	200m	3.0	10m	125J	2.5	220	10u			100	900	125J	15 ∅	TO94#△
87	35C100BF	1.0k	35	125J	200m§	200m	3.0	10m	125J	2.5	220	10u			100	900	125J	15 ∅	TO83#△
88	35C100F	1.0k	35	125J	200m§	200m	3 0	10m	125J	2 5	220	10u	35	40u§		900	125J	15 ∅	TO83#△
89#	CR30-1003A	1.0k	36	25	66m	60m	3.0			1 4	30	20u	30	73u		500	125	5.0	TO49
90#	CR30-1104AA	1 0k	38	70C	20m∅	80m	3 0	10m†	125C	2 5	100	20u	100	20u∅	20	660	125	5.0 ∅	TO49
91▼#	6TC100	1.0k	40			100m	3.0			1.3		10u		150u	50 §∅	1 5k*	125J		S183a
92#	2SF738	1.0k	40	70B		40m	3 0	7.0m	125J	1 7	50				100	300	125J	500m	S18c
93#	27TB10	1.0k	40	74B		.10	3.0	15m		2 1	78					450	125C	1.0	S63a
94#	CR24-1103RB	1.0k	40	80C	28m∅	40m	3 0	5 0m†	125C	1 4	50	2.3u	20	85u	20	320	125	5.0	
95#	CR24-1103RBA	1.0k	40	80C	28m∅	40m	3.0	5.0m†	125C	1.4	50	2 3u	20	85u	200	320	125	5.0	
96♦	40RCS100	1.0k∅	40	87C	200m	110m	3 0	1 2m	105J	1 7 †	40	4.5u	10		25 §	1.0k§	105J	500m†	TO65
97▼#	6TCA100	1.0k	40	125	60	100m	3 0							100u	100 §	1.5k	125	10	
98	251Z	1.0k	40	125J		100m	3.0	10m	125J	1.7	50	4 0u	50	100u	300	1.2k*	125J	3.0 †	Z59
99▼#	SKT45-10A	1.0k	45	85C	130m	100m	3.0			1 8	50			50u	50 §∅	800	130A	300m	S354
100▼#	SKT45-10B	1 0k	45	85C	130m	100m	3.0			1.8	50			50u	50 §	800	130A	300m	S354
101▼#	SKT45-10BX	1.0k	45	85C	130m	100m	3.0			1.8	50			40u∅	50 §	800	130A	300m	S354
102▼#	SKT45-10C	1 0k	45	85C	130m	100m	3.0			1.8	50			50u	200 §	800	130A	300m	S354
103▼#	SKT45-10CX	1.0k	45	85C	130m	100m	3 0			1.8	50			40u∅	200 §	800	130A	300m	S354
104▼#	SKT45-10D	1.0k	45	85C	130m	100m	3 0			1.8	50			50u	500 §	800	130A	300m	S354
105▼#	SKT45-10DX	1.0k	45	85C	130m	100m	3.0			1.8	50			40u∅	500 §	800	130A	300m	S354
106▼#	SKT45-10E	1.0k	45	85C	130m	100m	3 0			1.8	50			50u	1.0k§	800	130A	300m	S354
107▼#	T130N1000	1.0k	45	85C	200m	150m	1 4	30m	125J	1.8	500	7 5u	100	60u	50	3.5k§	125J		M330d
108#	28TB10	1.0k	47	73B		.10	3.0	15m		1.9	95					550	125	1 0	S63a
109#	CR50-10	1 0k	50	50	20	2.0	10		125	1.8	150	4.5u	50	25u	20	650	125	5 0	S142a
110	C146P	1.0k	55 △			100m	3.0							40u∅			125A		S236

SYMBOLS AND CODES EXPLAINED IN INTERPRETER

6. SILICON CONTROLLED RECTIFIERS

IN ORDER OF (1) PEAK REV. VOLT., (2) MAX. CONT. CUR., (3) TEMPERATURE, (4) TYPE No.

LINE No.	4 TYPE No.	1 PRV and VBO (V)	MAX. CONT. CURRENT 2 Idc (A)	3 at TEMP (°C)	MAX. HOLD. CUR Ih @ 25°C (A)	MAX. GATE FIRING SPEC at 25°C Igf (A)	Vgf (V)	MAX SAT I Ir@PRV and Is@VBO (A)	at TEMP (°C)	MAX. FWD. VOLT. DROP at 25°C Vf (V)	@ If (A)	SWITCHING TIME at 25°C Ton (s)	for If (A)	Toff (s)	MIN. dV/dt @ 25°C (V/us)	ABS. MAX. RATINGS 1Cy PK SURGE I@25°C (A)	MAX TEMP (°C)	MAX GATE POWER (W)	DWG No.
1#	29TB10	1.0k	55	68B		10	3.0	15m		1.8	110					650	125	1.0	S63a
2	NL576P	1.0k	55	82	500m	150m	3 0			2.4	110				10	700	125	2.0	
3	NL577P	1.0k	55	82C	.50	15	2.5	3.0m	125J	2.4	110				200	700	125J	2.0 †	TO103
4	C45T⊘	1 0k	55	89C	100m	70m	3.0	4.0m	125J	3 0 †	500	5.0u	50	30u§	100 §	1.2k	125J	500m†	TO83
5	C46T⊘	1.0k	55	89C	100m	70m	3.0	4.0m	125J	3.0 †	500	5.0u	50	30u§	100 §	1 2k	125J	500m†	TO49
6	NL555T	1 0k	55	89C	300m	150m	2.5	6.0m	125J	3 5 †	500	8.0u	50	100u§	200 §	1 2k	125J	2.0 †	TO49
7	NL556T	1.0k	55	89C	300m	150m	2.5	6.0m	125J	3.5 †	500	8 0u	50	100u§	200 §	1.2k	125J	2.0 †	TO83
8	NLF45T	1.0k	55	89C	100m	70m	3.0	4.0m	125J	3.0 †	500	5 0u	50	30u§	100 §	1.2k	125J	500m†	TO83
9	NLF46T	1.0k	55	89C	100m	70m	3.0	4.0m	125J	3.0 †	500	5.0u	50	30u§	100 §	1.2k	125J	500m†	TO94
10	2192Z	1 0k	55	94C		200m	3.0	10m	125J	2.0 §	50	8.0u	50	20u	100	1.2k*	125J	3.0 †	Z59
11	555P	1.0k	55	99C		150m	3 0								200		125J		TO49
12	556P	1 0k	55	99C		150m	3.0								200		125J		TO83
13#	2SF708	1 0k	55	100C		100m	3.5	10m	100J	2.7	500					700	100J	.50 †	S104a
14#	5TC100	1 0k	55	125	20m	45m	3.0			1.3	50	5.0u	50	25u		500	100J	20	S185
15	C145P	1.0k	55 △	125J	500m	150m	3 0	7.0m	125C	2.4 †	110				200	700 △	125J	2 0 †	TO103
16#	BTX49-1000R	1.0k§	60	85C	150m	80m	3 0	15m	125J	3.5	500	5 0u	50	50u		1 0k	125J	1.0 †	TO94
17#	T50N1000	1.0k	62 5	85C	300m	100m	3.0	20m	125J	2 2	160	2.5u⊘	25	80u§	20 §	800 §	125J		M330b%
18	2515Z	1.0k	63	120C		.10	3.0	15m	150J	1.7	50				300	1.2k	150J		TO83
19#	CR50-1003A	1.0k	64	25	73m	100m	3.0									600	125	5.0	TO49
20#	40T13	1 0k	65	75B	200m	200m	250m	10m		2.1	200					1 1k	125B	1.0	M308
21	2N3095	1.0k	70 △	62C		200m$	3 0 $	2.5m	62C	1.9 †	70				20	1.0k§*	125C	.50 †	TO49
22	2N3103	1 0k	70 △	62C		200m$	3.0 $	2 5m	62C	1.9 †	70				20	1.0k§*		.50 †	TO49
23	2N1804	1 0k	70 △	65C		200m$	3.0 $	2.7m	65C	2.0 †	70					1.0k*		50 †	TO83
24	2N3991	1 0k	70	70C		200m$	3.0 $	15m	125C	2.9 †	220			50u	200 §	1 0k*		10 ⊘	TO94
25#	36TB10	1 0k	70	75B		.15	3 0	15m		2.0	140					760	125	1.0	S63d
26	2N4366	1.0k	70	82C	200m	250m$	5 0 $	10m	125C	2.0 †	70				100	1.6k§*		15 ⊘	TO94
27	2N4376	1.0k	70	82C	200m	250m$	5.0 $	10m	125C	2.0 †	70				100	1.6k*§		15 ⊘	TO83
28#	CR70C20	1 0k	70	83C		100m	3 0	15m	125J	1.8	220 §				100 △	1.5k△	125J	5 0 ⊘	S332
29#	CR70CX20	1 0k	70	83C		100m	3 0	15m	125J	1 8 †	220			30 §	100 §	1.5k	125J	5 0 ⊘	S237f
30#	BTX50-1000R	1.0k§	70	85C	150m	80m	3.0	15m	125J	2.5	500	5 0u	50	50u		1.5k	125J	1.0 †	TO94
31▼#	SKT70-10A	1 0k	70	85C	150m	150m	3 0			1 8	60			70u	50 §⊘	1 7k	130A	500m	S260c
32▼#	SKT70-10B	1 0k	70	85C	150m	150m	3 0			1.8	60			70u	50 §	1 7k	130A	500m	S260c
33▼#	SKT70-10BX	1.0k	70	85C	150m	150m	3.0			1 8	60			40u⊘	50 §	1 7k	130A	500m	S260c
34▼#	SKT70-10C	1 0k	70	85C	150m	150m	3 0			1 8	60			70u	200 §	1 7k	130A	500m	S260c
35▼#	SKT70-10CX	1.0k	70	85C	150m	150m	3.0			1.8	60			40u⊘	200 §	1 7k	130A	500m	S260c
36▼#	SKT70-10D	1 0k	70	85C	150m	150m	3 0			1 8	60			70u	500 §	1.7k	130A	500m	S260c
37▼#	SKT70-10DX	1 0k	70	85C	150m	150m	3 0			1 8	60			40u⊘	500 §	1.7k	130A	500m	S260c
38▼#	SKT70-10E	1.0k	70	85C	150m	150m	3.0			1 8	60			70u	1.0k§	1 7k	130A	500m	S260c
39#	TK1100FA	1.0k	70	85C		300m	3 0	10m	125J	2.0	200	3 0u§	100	20u§	100 §	1.0k		900m	S317
40#	TK1100FB	1 0k	70	85C		300m	3.0	10m	125J	2.0	200	3 0u§	100	40u§	100 §	1 0k		900m	S317
41▼#	10TCA100	1 0k	70	125	100	100m	3 0							100u	100 §	1 5k	125	10	
42	70C100	1.0k	70	125J	200m§	200m	3 0	10m	125J	1.8	220	10u	70	40u§		1.6k	125J	15 ⊘	TO94#△
43	70C100C	1.0k	70	125J	200m§	100m	2.0	10m	125J	1.8	220	10u	70	40u§		1 6k	125J	15 ⊘	TO94#△
44	70C100CF	1 0k	70	125J	200m§	100m	2 0	10m	125J	1.8	220	10u	70	40u§		1.6k	125J	15 ⊘	TO83#△
45	70C100F	1.0k	70	125J	200m§	200m	3.0	10m	125J	1.8	220	10u	70	40u§		1.6k	125J	15 ⊘	TO83#△
46▼#	12TC100	1.0k	80		100m	100m	3.0			1.5		10u		150u	50 §	1.5k*	125J		S183b
47#	2SF553	1.0k⊘	80	50B		100m	3.5	10m	125J	2.3	500					1 0k	125J	5.0	S189d
48#	CR31-1103A	1 0k	80	55C	38m⊘	60m	3 0	10m†	125C	1.7	100	3.7u	100	130u	20	700	135J	5.0 ⊘	TO49
49#	CR31-1104AA	1.0k	80	55C	38m⊘	60m	3 0	10m†	125C	1.7	100	5 7u	100	20u⊘	20	700	135J	5.0 ⊘	TO49
50	36RA100	1 0k⊘	80 △	75C	500m	150m	2.5	10m	125C	2 2 †	160				200 §	1.0k△	125J	2.0 †	TO94
51	36RE100	1 0k⊘	80 △	75C	500m	150m	2.5	5 0m	125C	2.2 †	160				10 §	1.0k△	125J	2.0 †	TO94
52	37RA100	1.0k⊘	80 △	75C	500m	150m	2.5	10m	125C	2.2 †	160				200 §	1.0k△	125J	2.0 †	TO83
53	37RE100	1 0k⊘	80 △	75C	500m	150m	2 5	5.0m	125C	2 2 †	160				10 §	1.0k△	125J	2.0 †	TO83
54#	CR80-10	1.0k	80	75C	60m	100m	3 0	4 0m	100J	1.7	250	4 5u	80	30u		800	100	5.0	S284
55#	51RC100	1 0k	80 △	84B	50m	70m	2.5	1.5m		2.2	50	4 5u	50	60u	20	700	125A	5 0 ⊘	S237c
56	36REH100	1 0k⊘	80 △	100C	500m	150m	2 5	15m	150C	2.1 †	160				10 §	900 △	150J	2.0 †	TO94
57	37REH100	1.0k⊘	80 △	100C	500m	150m	2.5	15m	150C	2 1 †	160				10 §	900 △	150J	2.0 †	TO83
58▼#	12TCA100	1.0k	80	125	100	100m	3.0							100u	100 §	1.5k	125	10	
59	250Z	1 0k	80	125J		100m	3 0	10m	125J	1.3	50	4.0u	50	100u	300	1 6k*	125J	3 0 †	Z59
60#	CS42-10	1.0k	82	35	200m	110m	2.0	10m	115	1 9	180			180u	200	900	115	4.0	
61#	37TB10	1.0k	85	66B		.15	3 0	15m		1.9	175					930	125	1 0	S63d
62#	CR70-1101A	1.0k†	85	75C		100m	3 0	15m	25C	1 7	70				20	1.0k	125C	1.0	TO49
63#	CR70-1101C	1.0k	85	75C		100m	3.0	30m†	125C	1.7	210				20	1.0k	125	5.0	M376
64▼#	T70N1000	1 0k	85	85C	200m	150m	5.0m	25m	125J	2.8	400	4.5u	30	50u	50	2.0k§	125J		
65#	CS80-10	1.0k	90	75	50m	80m	3 0	15m	125	1.5	200			70	1.0k	1.2k	45	10	
66▼#	SKT90-10A	1.0k	90	85C	150m	150m	3 0			1.6	110			70u	50 §⊘	2 2k	130A	500m	S260c
67▼#	SKT90-10B	1 0k	90	85C	150m	150m	3.0			1.6	110			70u	50 §	2 2k	130A	500m	S260c
68▼#	SKT90-10C	1.0k	90	85C	150m	150m	3 0			1.6	110			70u	200 §	2 2k	130A	500m	S260c
69▼#	SKT90-10D	1 0k	90	85C	150m	150m	3 0			1.6	110			70u	500 §	2 2k	130A	500m	S260c
70#	TT10FA	1.0k	95	85C		500m	3 0	25m	125J	2.0	350	3.0u§	100	20u§	100 §	2.0k		1 5	S204a
71#	TT10FB	1.0k	95	85C		500m	3 0	25m	125J	2.0	350	3.0u§	100	40u§	100 §	2.0k		1 5	S204a
72#	TT10	1 0k	100	25A	50m⊘	500m	3 0	25m	100J	2.2	350	5.0u§	100	100u§	50 §	2.0k		1.5	S204a
73#	CR100-10	1 0k	100	50	20	2.0	10		125	1 7	350	45u	100	25u	20	1.0k	125	5.0	S267c
74#	38TB10	1 0k	100	62B		15	3.0	15m		1.8	205					1.0k	125	1.0	S63d
75	100C100	1.0k	100	125J	200m	200m	2.5	25m	125J	2.0	500	10u	100	40u§		2.0k	125J	10 ⊘	TO93#△
76	100C100B	1 0k	100	125J	200m	200m	2.5	25m	125J	2.0	500	10u	100	40u§	100	2.0k	125J	10 ⊘	TO93#△
77#	CR51-1103A	1 0k	105	55C	38m⊘	60m	3 0	10m†	125C	1.6	150	3.4u	120	185u	20	760	135J	5.0	TO49
78	809Z	1.0k	110	55	100m§⊘	200m	3 0	8 0m	125J	2.0	50					100	125J	5 0	
79	JAN2N3095	1 0k	110	60B	40m	70m	3 0			1 4	50		50	40u⊘	20 §	1.0k	125B	500m	TO94
80	JAN2N3103	1.0k	110	60B	40m	70m	3 0			1 4	50		50	40u⊘	20 §	1.0k	125B	500m	TO94
81	72RE100	1.0k§	110	60C	15m⊘	70m	2.0	2 5m⊘	125J	1 8	220					1.0k△	125J	5.0 ⊘	TO83
82	72RE100A	1 0k§#	110	60C	15m⊘	70m	2 0	2 5m⊘	125J	1.8	220					1.0k△	125J	5.0 ⊘	TO83
83	2542Z	1.0k	110	60C		200m	3 0	10m	125J	1 7	50	8.0u	50	20u	100	1.4k*	125J	3.0 †	Z59
84	71RB100	1 0k⊘	110 △	65C	500m	150m	2 5	10m	125J	2 5 †	220	2.0u	50	30u§	200 △	1.2k△	125J	2.0 †	TO94
85	71REB100	1 0k⊘	110 △	65C	500m	150m	2 5	5 0m	125J	2.5 †	220	2.0u	50	30u§	200 △	1.2k△	125J	2.0 †	TO94
86	72RB100	1.0k⊘	110 △	65C	500m	150m	2 5	10m	125J	2.5 †	220	2.0u	50	30u§	200 △	1.2k△	125J	2.0 †	TO83
87	72REB100	1 0k⊘	110 △	65C	500m	150m	2 5	5.0m	125J	2 5 †	220	2 0u	50	30u§	200 △	1.2k△	125J	2.0 †	TO83
88	C150P△	1 0k	110 △	70C	500m	150m	3 0	15m	120C	2.6	500	8.0u	50	100u§	200	1 5k	125J	10	TO94
89	C151P△	1 0k	110 △	70C	500m	150m	3 0	15m	120C	3.5	500	8.0u	50	50u§	200	1 0k	125J	10	S91
90	C152P△	1.0k	110 △	70C	500m	150m	3 0	15m	120C	2 6	500	8.0u	50	100u§	200	1.5k	125J	10	S315
91	C153P△	1 0k	110 △	70C	500m	150m	3 0	15m	120C	3.5	500	8.0u	50	50u§	200	1 0k	125J	10	S108
92	C50T⊘	1 0k	110	77C	100m	70m	2 5	4.0m	125J	2.5 †	500	5.0u	5.0	30u§	100 §	1.6k	125J	500m†	TO49
93#	71RC100	1 0k	110 △	79B	50m	70m	2 5	1 5m		1.9	70	4.5u	50	70u	20	1 0k	125A	5 0 ⊘	S237c
94	71RA100	1 0k⊘	110 △	80C	500m	150m	2 5	10m	125J	1.9 †	220	2.0u	50	50u§	200 △	1 6k△	125J	2.0 †	TO94
95	71REA100	1 0k⊘	110 △	80C	500m	150m	2 5	5 0m	125J	1.9 †	220	2.0u	50	50u§	200 △	1 6k△	125J	2 0 †	TO94
96	72RA100	1.0k⊘	110 △	80C	500m	150m	2.5	10m	125J	1.9 †	220	2.0u	50	50u§	200 △	1.6k△	125J	2.0 †	TO83
97	72REA100	1.0k⊘	110 △	80C	500m	150m	2 5	5 0m	125J	1 9 †	220	2.0u	50	50u§	200 △	1.6k△	125J	2.0 †	TO83
98	C151T⊘	1.0k	110	80C	500m	150m	2 5	8.0m	125J	2.6 †	500	8.0u	50	30u§	200 §	1 4k	125J	2.0 †	TO49
99	C153T⊘	1.0k	110	80C	500m	150m	2.5	8 0m	125J	2 6 †	500	8 0u	50	30u§	200 §	1 4k	125J	2 0 †	TO83
100	NLE151P	1 0k	110	80C	50	.15	2.5	8 0m	125J	2.6	500	8.0u	50	50u	200	1.4k	125J	2 0 †	TO94
101	NLE153P	1 0k	110	80C	50	15	2 5	8.0m	125J	2 6	500	8 0u	50	50u	200	1.4k	125J	2 0 †	TO83
102	NLF151P	1.0k	110	80C	500m	150m	2.5	8 0m	125J	2.6 †	500	8.0u	50	50u⊘	200	1.4k△	125J	2.0 †	TO94
103	NLF153P	1 0k	110	80C	500m	150m	2 5	8 0m	125J	2.6 †	500	8 0u	50	50u⊘	200	1.4k△	125J	2 0 †	TO83
104	NLF158P	1 0k	110	83C	500m	150m	2 5	8.0m	125J	3.0 †	500	5 0u	50	40u⊘	200	1.4k△	125J	2 0 †	TO94
105	NLF159P	1.0k	110	83C	500m	150m	2.5	8 0m	125J	3 0 †	500	5.0u	50	40u⊘	200	1.4k△	125J	2 0 †	TO83
106▼#	SKT110-10A	1 0k	110	85C	200m	200m	3 0			1.6	70			80u	50 §⊘	2.8k	130A	1 0	S260d
107▼#	SKT110-10B	1.0k	110	85C	200m	200m	3 0			1 6	70			80u	50 §	2.8k	130A	1.0	S260d
108▼#	SKT110-10BY	1.0k	110	85C	200m	200m	3 0			1.6	70			45u⊘	50 §	2.8k	130A	1.0	S260d
109▼#	SKT110-10C	1 0k	110	85C	200m	200m	3.0			1 6	70			80u	200 §	2 8k	130A	1.0	S260d
110▼#	SKT110-10CY	1 0k	110	85C	200m	200m	3 0			1 6	70			45u⊘	200 §	2 8k	130A	1.0	S260d

SYMBOLS AND CODES EXPLAINED IN INTERPRETER

6. SILICON CONTROLLED RECTIFIERS

IN ORDER OF (1) PEAK REV. VOLT., (2) MAX. CONT. CUR., (3) TEMPERATURE, (4) TYPE No.

LINE No.	4 TYPE No.	1 PRV and VBO (V)	MAX. CONT. CURRENT 2 Idc (A)	3 at TEMP (°C)	MAX. HOLD. CUR Ih @ 25°C (A)	MAX. GATE FIRING SPEC at 25°C Igf (A)	Vgf (V)	MAX SAT I Ir@PRV and Is@VBO (A)	at TEMP (°C)	MAX. FWD. VOLT. DROP at 25°C Vf (V)	@ If (A)	SWITCHING TIME at 25°C Ton (s)	for If (A)	Toff (s)	MIN. dV/dt @ 25°C (V/us)	ABS. MAX. RATINGS 1Cy PK SURGE I@25°C (A)	MAX TEMP (°C)	MAX GATE POWER (W)	DWG. No
1▼#	SKT110-10D	1.0k	110	85C	200m	200m	3 0			1.6	70			80u	500 §	2 8k	130A	1 0	S260d
2▼#	SKT110-10DY	1.0k	110	85C	200m	200m	3.0			1 6	70			45u∅	500 §	2 8k	130A	1 0	S260d
3▼#	SKT110-10E	1 0k	110	85C	200m	200m	3 0			1 6	70			80u	1 0k§	2.8k	130A	1 0	S260d
4	C150T∅	1.0k	110	89C	500m	150m	2 5	6 0m	125J	2.6 †	500	8.0u	50	100u§	200 §	1 8k	125J	2 0 †	T049
5	C152T∅	1.0k	110	89C	500m	150m	2 5	6.0m	125J	2.6 †	500	8.0u	50	100u§	200 §	1 8k	125J	2 0 †	T083
6	NLE150P	1 0k	110	89C	50	15	2 5	4 0m	125J	2.6	500	8.0u	50	150u	200	1.6k	125J	2 0 †	T094
7	NLE152P	1.0k	110	89C	50	15	2 5	4 0m	125J	2.6	500	8.0u	50	150u	200	1.6k	125J	2.0 †	T083
8	NLF150T	1 0k	110	89C	500m	150m	2 5	6 0m	125J	2.6 †	500	8.0u	50	100u§	200 §	1 6k	125J	2.0 †	T094
9	NLF152T	1 0k	110	89C	500m	150m	2 5	6 0m	125J	2.6 †	500	8.0u	50	100u§	200 §	1.6k	125J	2.0 †	T083
10	NLH150P	1 0k	110	89C	50	15	2 5	4.0m	125J	2.6	500	8.0u	50	150u	200	1.6k	125J	2.0 †	T094
11	NLH152P	1 0k	110	89C	50	15	2 5	4 0m	125J	2.6	500	8.0u	50	150u	200	1 6k	125J	2.0 †	T083
12	71REJ100	1 0k∅	110 △	90C	500m	150m	2.5	15m	150J	2.5 †	220	2.0u	50	50u§	50 △	1.0k△	150J	2.0 †	T094
13	72REJ100	1 0k∅	110 △	90C	500m	150m	2 5	15m	150J	2.5 †	220	2.0u	50	50u§	50 △	1.0k△	150J	2 0 †	T083
14	NLC150P	1 0k	110	90C	50	15	2.5	6.0m	125J	2.6	500	8.0u	50	100u	200	1 8k	125J	2 0 †	T049
15	NLC152P	1.0k	110	90C	50	15	2 5	6.0m	125J	2.6	500	8.0u	50	100u	200	1.8k	125J	2.0 †	T083
16	NLC350P	1 0k	110	90C	50	15	2 5	4.0m	125J	2.6	500	8 0u	5.0	100u	200	1.8k	125J	2.0 †	M456
17	71REH100	1.0k∅	110 △	105C	500m	150m	2.5	15m	150J	1 9 †	220	2 0u	50	60u§	50 △	1.0k△	150J	2.0 †	T094
18	72REH100	1.0k∅	110 △	105C	500m	150m	2 5	15m	150J	1.9 †	220	2 0u	50	60u§	50 △	1.0k△	150J	2.0 †	T083
19#	10TC100	1.0k	110	125	20m	60m	3.0			1 5	110	5.0u	110	25u		1 1k	125J	20	S185
20	C158P	1 0k	110 △	125J	500m	150m	3 0	11m	125C	3 5 †	500				200 §	1.2k△	125J	2 0 †	T094
21	C159P	1 0k	110 △	125J	500m	150m	3 0	11m	125C	3.5 †	500				200 §	1.2k△	125J	2.0 †	S315
22#	CR120-10	1 0k	120	75C	60m	100m	3 0	4.0m	125J	2 1	370	4 5u	120	40u		1.0k	125	5 0	S284
23#	CR100-1101C	1.0k†	124	80C		100m	3 0	15m	25C	1.7	100				20	1 2k	125C	1.0	M376
24#	CR100-1101D	1 0k	125	80C	30m∅	100m	3 0	30m†	125C	1 7	300			100	20	1 5k	125	5.0	T049
25	2505Z	1 0k	125	95C		.10	3.0	15m	150J	1.3	50				300	1 6k	150J		T083
26#	SF80N11	1 0k	126 △	85C	200m	150m	3 0	15m	125	1 7 §	250	6.0u	80		15	1.6k	125J	5.0	S267b
27#	42TB10	1 0k	135	57B		20	3.0	15m		2.2	265					1.4k	125	1.5	M308
28♦#	30TC100	1 0k	140		150m	100m	3 0			1 5					50 §∅	3 5k*	125J		S348
29▼#	SKT140-10A	1 0k	140	85C	200m	200m	3 0			1 6	200			80u	50 §∅	3.9k	130A	1.0	S260d
30▼#	SKT140-10B	1 0k	140	85C	200m	200m	3 0			1 6	200			80u	50 §	3.9k	130A	1 0	S260d
31▼#	SKT140-10C	1.0k	140	85C	200m	200m	3.0			1 6	200			80u	200 §	3.9k	130A	1 0	S260d
32▼#	SKT140-10D	1 0k	140	85C	200m	200m	3 0			1 6	200			80u	500 §	3.9k	130A	1.0	S260d
33▼#	20TCA100	1.0k	140	125	150	100m	3 0							100u	100 §	3.0k	125	10	
34#	TT2100	1 0k	150	25A	50m∅	500m	3 0	25m	125J	1 7	450	5 0u§	100	100u§	50 §	3.2k		1 5	S204a
35	2N2550	1 0k	150	80C	50m§	150m§	3 0 §	7 5m	80C	1 5	150				4 0	3.5k§	125C	2.0 †	T093
36#	CR150BX20	1 0k	150	81C		300m	3.0	15m∅	125J	1.9	500			30u∅	100 △	4 0k	125J	16 ∅	S237a
37#	FT150BX20	1 0k	150	81C		300m	3 0	15m	125J	1 9	500		150	30u∅	100 △	4.0k△	125J	16 ∅	M567
38#	TT2100FA	1.0k	150	85C		500m	3 0	25m	125	2 0	450	3 0u§	100	20u§	100 §	3.2k		1.5	S204a
39#	TT2100FB	1 0k	150	85C		500m	3.0	25m	125	2.0	450	3 0u§	100	40u§	100 §	3.2k		1.5	S204a
40	150C100	1.0k	150	125J	200m	200m	2 5	25m	125J	1 7	500	10u	150	40u§		3.0k	125J	10 ∅	T093#△
41	150C100B	1 0k	150	125J	200m	200m	2 5	25m	125J	1.7	500	10u	150	40u§	100	3 0k	125J	10 ∅	T093#△
42	101RA100	1.0k∅	160 △	80C	500m	150m	2.5	15m	125J	2 1 †	314	2 0u	150	35u§	200 △	2.0k△	125J	2 0 †	T093
43	101RE100	1.0k∅	160 △	80C	500m	150m	2 5	8 0m	125J	2.1 †	314	2.0u	150	35u§	4.0 △	2 0k△	125J	2.0 †	T093
44#	101RC100	1 0k	160 △	91B	50m	10	3 5	3 0m		1.8	100	5 0u	50	80u	20	2 0k	125A	10 ∅	S237d
45♦	115PA100	1.0k∅	170 △	85C	500m	150m	2.5	15m	125C	2.3 †	340				200 §	1 6k△	125J	2.0 †	Y200b
46▼#	SKT170-10A	1.0k	170	85C	200m	250m	3 0			1 6	500			100u	50 §∅	6 6k	130A	1 0	S355
47▼#	SKT170-10B	1.0k	170	85C	200m	250m	3 0			1.6	500			100u	50 §	6.6k	130A	1 0	S355
48▼#	SKT170-10BZ	1 0k	170	85C	200m	250m	3.0			1.6	500			50u∅	50 §	6.6k	130A	1.0	S355
49▼#	SKT170-10C	1.0k	170	85C	200m	250m	3.0			1.6	500			100u	200 §	6 6k	130A	1 0	S355
50▼#	SKT170-10CZ	1 0k	170	85C	200m	250m	3 0			1.6	500			50u∅	200 §	6 6k	130A	1 0	S355
51▼#	SKT170-10D	1.0k	170	85C	200m	250m	3.0			1.6	500			100u	500 §	6 6k	130A	1 0	S355
52▼#	SKT170-10DZ	1.0k	170	85C	200m	250m	3.0			1 6	500			50u∅	500 §	6 6k	130A	1.0	S355
53▼#	SKT170-10E	1 0k	170	85C	200m	250m	3.0			1.6	500			100u	1.0k§	6 6k	130A	1 0	S355
54#	43TB10	1.0k	175	62B		20	3.0	15m		2.2	390					1 9k	125	1.5	M308
55▼#	2SF1148	1.0k	175	75C		300m	3 0	15m	125J	1 7 §	500				100 △	4 0k△	125J	16 ∅	S237e
56#	CR150F20	1 0k	175	75C		300m	3 0	15m	125J	1 7 §	500				100 §	4.0k	125J	16 ∅	S237e
57#	FT150B20	1.0k	175	75C		300m	3.0	15m	125J	1.7	500 §				100 △	4 0k△	125J	16 ∅	M567
58	2N3894	1 0k	175	80	200m	400m	4.0	15m	125	1.8	175					4 5k	125	3.0	T093
59	C350P	1 0k	175	80C	500m	150m	3 0	7.0m	25	2 6	500	8.0u	50	100u	200	1.5k	120C	2.0	M514
60	2202Z	1.0k	175	125J		300m	4 0	15m	125J	1.3 §	100	8 0u	100	40u	100	4.0k*	125J	3.0 †	T093
61▼#	T161N1000	1 0k	180	85C	300m	200m	2 0	50m	125J	1.8	500	4.0u	100	50u	50	5 2k§	125J		M330d
62	C358P	1 0k	180 △	125J	500m	150m	3 0	11m	125C	3.5	500	2.0u	50	30u∅	200	1 2k	125J	2.0	M514
63#	CS130-10	1 0k	190	55	100m	150m	3 0	30m	125	1 7	400			60u	1.0k	3.5k	125	30	
64▼#	TY120SP10K2	1 0k	190	70B	40m	220m	3.5	24m	125J	1.7	300				200 §	2.7k	125J	3.0 †	S375a
65#	46TB10	1 0k	195	56B		.20	3 0	15m		2.0	390					2.1k	125	1.5	M308
66#	2SF558	1 0k∅	200	62B		125m	2.5	15m	125J	2.1	1 0k					3.5k	125J	10	S167
67	C178T	1 0k	200	64C	500m	300m	2 5	12m	125J	3.5 †	1 5k	8 0u	100	150u§	200 §	2.5k	125J	2.0 †	T093
68	261Z	1.0k	200	80		.15	3 0	15m	125J	1 4	100				300	3.3k	125		T093
69	2182Z	1 0k	200	80C		300m	4 0	15m	125J	1.3 §	100	8.0u	100	30u	100	3.3k*	125J	3 0 †	T093
70	263Z	1 0k	200	85		15	3.0	15m	125J	1.3	50				300	1.6k	125		M414
71▼#	T171F1000	1 0k	200	85C	300m	200m	2.0	50m	125J	1.8	500	7 5u	100	20u∅	50	5 8k§	125J		M330d
72#	TT3100	1 0k	200	85C	40m∅	500m	3.0	25m	125J	1.6	600	5.0u§		100u§	100 ∅§	4.0k		1 5	S204a
73▼#	30TCA100	1 0k	200	125	150	100m	3.0								100 §	5.5k	125	10	
74#	CR153-1103A	1 0k	220	70C	35m∅	150m	3 5	30m†	125C	1.6	450				100	3.0k	125	5.0 ∅	M201
75▼#	SKT220-10A	1 0k	220	85C	200m	250m	3.0			1 6	800			100u	50 §∅	7.8k	130A	1.0	S355
76▼#	SKT220-10B	1 0k	220	85C	200m	250m	3 0			1 6	800			100u	50 §	7.8k	130A	1.0	S355
77▼#	SKT220-10C	1.0k	220	85C	200m	250m	3.0			1.6	800			100u	200 §	7 8k	130A	1.0	S355
78▼#	SKT220-10D	1 0k	220	85C	200m	250m	3.0			1.6	800			100u	500 §	7 8k	130A	1.0	S355
79#	20TC100	1 0k	220	125	50m	100m	3 0			1.5	200	5.0u	200	30u		2.5k	125J	20	S183
80#	CR152-1103A	1 0k	230	70C	35m∅	150m	3 5	30m†	125C	1.5	450				100	3.1k	125	5.0	M201
81	C181T	1.0k	235	65C	500m	300m	2.5	12m	125J	3.5 †	1.5k	8.0u	100	75u§	200 §	2 5k	125J	2 0 †	T093
82	151RB100	1 0k∅	235 △	75C	500m	150m	2.5	15m	125J	2.2 †	471	2.0u	150	40u§	200 △	2 5k△	125J	2.0 †	T093
83	151REB100	1 0k∅	235 △	75C	500m	150m	2 5	8.0m	125J	2.2 †	471	2.0u	150	40u§	200 △	2.5k△	125J	2 †	T093
84#	SF150N11	1.0k	235	76S	200m	150m	3.0	20m	125J	1.5	500					3.2k	125	16	S91b
85#	151RC100	1.0k	235 △	78B	50m	.10	2 5	3.0m		1.8	150	5 0u	50	80u	20	3 0k	125A	10 ∅	S237c
86	C180P△	1.0k	235 △	80C	500m	150m	3 0	7.0m	25	2.9 †	1.5k	8.0u	100	75u	200	3.5k	125C	2.0	T093
87	C180T∅	1 0k	235	80C	500m	150m	2.5	4.0m	125J	2.9 †	1.5k	8 0u	100	75u§	200 §	3 5k	125J	2 0 †	T093
88	NLF180P	1 0k	235 △	80C	500m	150m	2.5	4.0m	125J	2.8	1.5k	8.0u	100	80u	200	3.5k	125J	2.0 †	T093
89	151RA100	1 0k∅	235 △	85C	500m	150m	2 5	15m	125J	1 8 †	471	2.0u	150	60u§	200 △	3.5k△	125J	2.0 †	T093
90	151REA100	1.0k∅	235 △	85C	500m	150m	2.5	8 0m	125J	1.8 †	471	2.0u	150	60u§	200 △	3.5k△	125J	2 †	T093
91♦	C280P	1 0k	235	85C	100m	150m	3 0			1.4	500	10u	5.0	250u§	100 §	3.5k	125J	3 0	S132
92▼	C281P	1 0k	235	85C	100m	150m	3 0			1.4	500	10u	5.0	250u§	100 §	3.5k	125J	3.0	S247a
93#	CR151-1103A	1 0k	240	70C	35m∅	150m	3.5	30m†	125C	1.4	450				100	3 3k	125	5.0	M201
94#	CR250GX20	1 0k	250	50C		350m	4.0	15m	125J	1.9	780 §		250	30u∅	100 △	5.0k△	125J	16 ∅	M569
95#	FT250BX20	1 0k	250	52C		350m	4 0	15m	125J	1 9	780 §		250	30u∅	100	5.0k△	125J	16 ∅	M567
96#	FT250B20	1 0k	250	55C		350m	4 0	15m	125J	1.8	780 §				100 △	5.0k△	125J	16 ∅	M567
97#	CR250AX20	1 0k	250	61C	30m∅	350m	4 0	15m	125J	1.9 §	780			30 §	100 §	5.0k	125J	16 ∅	S158e
98#	2SF540	1.0k	250	65C		350m	4 0	15m∅	125J	1 8	780				10 △	5.0k	125J	16 ∅	S158b
99♦#	BTX41-1000R	1 0k	250	65B	150m	250m	2.5	10m	110J	1.5 §	600 §	20u	250	200u	20 §	5.5k*	110J	2.0 †	S237g
100#	CR250F20	1 0k	250	65C		350m	4.0	15m	125J	1 8 §	780				100 §	5 0k	125J	3 0 †	S158e
101	2N3363	1 0k	250	80C	200m§	400m§	4 0 §	15m	125C	2.0 §	250					5.0k§*	125C	3 0 †	TO108
102#	T250F1000	1.0k	250	85C	300m	200m	2.0	50m	125J	1 7	500	3.0u	100	30u§	400 §	5.5k§	125J	150	M387
103▼#	T221N1000	1 0k	260	85C	300m	200m	2 0	50m	125J	1.5	500	4 0u	100	60u	50	6.5k§	125J		M330d
104#	61TB10	1.0k	275	67B		30	3.0	40m		2.4	665					3.2	125	2.0	M308a
105	260Z	1.0k	275	80		.15	3.0	15m	125J	1.2					300	3.3k	125		T093
106♦	175PA100	1.0k∅	275 △	85C	500m	150m	2 5	20m	125C	2.3 †	550				200 §	3.0k△	125J	2.0 †	Y200b
107#	CS220-10	1.0k	290	70	100m	150m	3 0	50m	125	1 6	600			60u	1 0k	5.2k	125	30	
108♦#	40TC100	1.0k	300		150m	100m	3 0			1.5					50 §∅	4.5k*	125J		S348
109#	CR300AW20	1.0k	300	11A	30m∅	350m	4 0	15m	125J	1.9 §	780			50 §	100 §	5.0k	125J	16 ∅	S300
110#	CR300AX20	1.0k	300	11A	30m∅	350m	4.0	15m	125J	1.9 §	780			30 §	100 §	5 0k	125J	16 ∅	S300

SYMBOLS AND CODES EXPLAINED IN INTERPRETER

6. SILICON CONTROLLED RECTIFIERS

IN ORDER OF (1) PEAK REV. VOLT., (2) MAX. CONT. CUR., (3) TEMPERATURE, (4) TYPE No.

LINE No.	4 TYPE No.	1 PRV and VBO (V)	MAX. CONT. CURRENT 2 Idc (A)	3 at TEMP (°C)	MAX. HOLD. CUR Ih @ 25°C (A)	MAX. GATE FIRING SPEC at 25°C Igf (A)	Vgf (V)	MAX SAT I Ir@PRV and Is@VBO (A)	at TEMP (°C)	MAX. FWD. VOLT. DROP at 25°C Vf (V)	@ If (A)	SWITCHING TIME at 25°C Ton (s)	for If (A)	Toff (s)	MIN dV/dt @ 25°C (V/us)	ABS. MAX. RATINGS 1Cy PK SURGE I@25°C (A)	MAX TEMP (°C)	MAX GATE POWER (W)	DWG. No.
1▼#	2SF927	1.0k	300	15A		350m	4 0	15m	125J	1 8 §	780				100 △	5.0k△	125J	16 ∅	S300
2#	CR300F20	1.0k	300	15A		350m	4 0	15m	125J	1.8 §	780				100 §	5 0k	125J	16 ∅	S300
3	273Z	1 0k	300	70		15	3 0	15m	125J	1 3	100				300	3.3k	125		M414
4♦#	FT300A20	1 0k	300	81C		200m	3 0	30m	125J	1 6	940 §				200 △	6 0k△	125J	16 ∅	M567a
5#	CS300-10	1 0k	300	85	100m	150m	3 0	40m	125	1 5	900			100u	1 0k	7 0k	125	50	
6▼#	40TCA100	1.0k	300	125	150	100m	3 0								100 §	5 5k	125	10	
7	2232Z	1.0k	300	125J		300m	4 0	15m	125J	1.3 §	100	8 0u	100	40u	100	4 5k*	125J	3.0 †	M247
8	2248Z	1.0k	300	125J		300m	4 0	10m	125J	1 0 §	100	5 0u	150	50u	100	5.0k*	125J	3 0 †	M308c
9▼#	TY290SP10K2	1.0k	305	70B	45m	220m	3 5	24m	125J	1 7	1 0k	10u∅	500	30u∅	200 §	7.2k	125J	3.0 †	S373
10▼#	TYA290SP10K2	1.0k	305	70B	45m	220m	3.5	24m	125J	1 6	600				200 §	6.4k	125J	3.0 †	S374
11#	62TB10	1.0k	315	65B		30	3 0	40m		2 2	665					3 7k	125	2 0	M308a
12#	CR253-1103A	1 0k	320	40C	35m∅	150m	3 5	30m†	125C	1.6	450				100	3 5k	125	5 0 ∅	M201
13#	CR252-1103A	1 0k	336	50C	35m∅	150m	3 5	30m†	125C	1 5	450				100	3 6k	125	5 0	M201
14#	70TB10	1 0k	355	67B		30	3 0	40m		2.2	850					4 1	125	2.0	M308a
15▼#	T302N1000	1 0k	370	85C	300m	200m	2 0	50m	125J	1.4	500	4 0u	100	80u	50	7 2k§	125J		M330d
16	C380P	1 0k	380	65C	500m	150m	3 0 §	7 0m	25C	2 8	1 5k	8 0u	100	100u	200	3 5k	120	2.0	M514
17	NLF380P	1 0k	380	67	500m	150m	2 5	10m	25	2 8	1 5k	8 0u	100	100u	200	3 5k	125	2 0	
18♦	250PA100	1 0k∅	390 △	70C	500m	150m	2.5	20m	125C	2 3 †	780				200 §	4 2k△	125J	2.0 †	Y200b
19	2N3540	1 0k	400	20A	200m§	400m	4 0	15m	125J	1 9	250					5 0k	125J	16	M247
20▼	250RM100	1 0k∅	400	60C	500m	150m	2 5	20m	125C	1 7 †	785		500	40u§	200 §	5 5k△	125J	2 0 †	TO118
21▼	251RM100	1 0k∅	400	60C	500m	150m	2 5	20m	125J	1 7 †	785		500	40u§	200 §	5 5k△	125J	2 0 †	TO108
22#	71TB10	1 0k	400	65B		30	3 0	40m		2.0	850					4.6k	125	2 0	M308a
23#	2SF835	1 0k	400	68B		125m	3 0	25m	125J	1 6	1.0k					7 0k	125J	10	S280
24	250RA100	1 0k∅	400 △	75C	100m	150m	3 0	20m	125J	1 7 †	785	5 0u	250	40u§	100 △∅	5 0k△	125J	3.0 †	TO118
25#	FT500AW20	1 0k	400	75C		350m	4 0	30m	125J	2.2	1 2k§		400	50u∅	200 △	7 0k△	125J	16 ∅	M406
26#	FT500AX20	1 0k	400	75C		350m	400	30m	125J	2 2	1.2k§		400	30u∅	200 △	7 0k△	125J	16 ∅	M406
27#	FT500A20	1 0k	400	76C		350m	4 0	30m∅	125J	2 2 †	1 2k§				200 △	7.0k△	125J	16 ∅	M406
28▼#	2SF933	1 0k	400	77C		350m	4 0	30m	125J	2.2 §	1 2k				200 △	7 0k△	125J	16 ∅	M406
29▼#	FT500BX20	1 0k	400	83C		350m	4 0	50m	125J	2 2 §	1 2k		400	30u∅	200 △	8 0k△	125J	16 ∅	M566
30▼#	FT500BY20	1 0k	400	83C		350m	4.0	50m	125J	2 2 §	1.2k		400	15u∅	200 △	8 0k△	125J	16 ∅	M566
31#	251RC100	1 0k	400 △	85B	40m	15	2 5	3 0m		1 5	250	6.0u	50	100u	4 0	4 8k	125A	10 ∅	S158d
32#	2SF565	1.0k	400	90B		125m	3 0	25m	125J	1 4	1 0k					7 0k	125	20	S280
33#	73TB10	1 0k	430	64B		30	3.0	40m		2 0	1 0k					5 1k	125	2.0	M308a
34#	CR7K1103A45	1 0k	435	65C	55m∅	150m	3 5	50m	125J	1 8	1 0k	3 5u	600	180u	100	6.0k	125J	5.0 ∅	M308b
35▼#	TY490SP10K2	1 0k	450	70B	31m	220m	3 5	24m	125J	1 6	1 0k				200 §	8 9k	125J	3 0 †	S373
36▼#	TYA490SP10K2	1 0k	450	70B	31m	220m	3 5	24m	125J	1.6	1 0k				200 §	8 9k	125J	3 0 †	S374
37▼#	YST302QP10K3	1.0k	450	70B	100m	220m	3.5	30m	125J	1 9	1 0k	4 0u∅	600	60u∅	200 §	7.4k	125J	3.0 †	S371a
38#	CR7K1103A4	1 0k	460	65C	55m∅	150m	3 5	50m	125J	1 7	100	3 5u	600	180u	100	6 4k	125J	5 0 ∅	M308b
39	276Z	1 0k	470			15	3 0	15m	125J	1 2	100				300	5 5k	125		M247
40	304RA100	1 0k∅	470 △	5A	500m	150m	3 0	20m	125C	1 6 †	940					6 0k△	125J	3.0 †	TO109#
41#	74TB10	1 0k	470	63B		300m	3.0	40m		1 8	1 0k					5 6k	125	2 0	M308a
42♦	C290P	1 0k	470	65C	100m	150m	3 5			1 2	500	10u	5.0	250u§	100 §	5 5k	125J	3 0	S132
43♦	C291P△	1.0k	470	65C	100m	150m	3 5			1 2	500	10u	5 0	250u§	100 §	5.5k	125J	3 0	S247a
44#	SF300N11	1 0k	470	65C	300m	260m	3 5	20m	125J	1 6	1.0k	6 0u			15 §	5 0k	125J	3.0	S267a
45	C291P∅	1.0k	470	66C	100m	150m	3 0	15m	125J	1 2 †	500	5 0u	5.0	100u§	100 §	5 5k	125J	3 0 †	M331a
46	NLF290P	1 0k	470	67	100m	150m	3 0	15m	125	1 2	500	5.0u	5 0	100u	100	5.5k	125	3 0	
47	272Z	1 0k	470	71		15m	3 0	15m	125J	1 2	100				300	5 5k	125		M414
48	300RA100	1 0k∅	470 △	75C	100m	150m	3 0	20m	125J	1 4 †	945	5.0u	250	50u§	100 ∅△	5 5k△	125J	3.0 †	TO118
49	300RB100	1 0k∅	470 △	75C	100m	150m	3 0	20m	125J	1.6 †	945	5.0u	250	50u§	25 △	5 5k△	125J	3 0 †	TO118
50#	301RC100	1.0k	470 △	85B	40m	15	2 5	4.0m		1 4	300	6.0u	50	100u	4 0	5 5k	125A	10 ∅	S158d
51	NLF291P	1 0k	470 △	125J	100m	150m	2.5	15m	125J	1 2	500	5 0u	100	100u§	100 §	5.5k△	125J	2 0 †	M436%
52#	CR7K1103A35	1 0k	480	65C	140m	150m	3 5	50m	125J	1 6	1 0k	3.5u	600	180u	100	6 9k	125J	5 0 ∅	M308b
53▼#	YST301QP10K3	1 0k	500	70B	100m	220m	3 5	30m	125J	1.9	1 0k	4 0u∅	600	20u∅	200 §	7 4k	125J	3 0 †	S371a
54#	FT500C20	1 0k	500	77C		350m	4 0	30m	125J	1 7 §	1 5k				200 §	10k	125J	16 ∅	M481
55#	CS500-10	1 0k	500	85	100m	500	3 5	40m	125	1 6	1 5k			200u	1 0k	10k	125	50	
56#	80TB10	1 0k	510	59B		30	3 0	40m		1.5	1.2k					6 4k	125	2 0	M308a
57#	CR7K1103A3	1 0k	520	55C	140m	150m	3 5			1.5	1 0k					7 0k	125J	5 ∅	M308b
58▼	NLC501P	1 0k	550	25	250m	150m	6 5 §			1.5	1 0k			200u§	100 §	7 0k	125J	5.0 †	M593
59#	81TB10	1 0k	550	56B		.30	3 0	40m		1 7	1 2k					7 0k	125	2.0	M308a
60	350RA100	1 0k	550	65C	100m	150m	3.0	20m	125J	1.4	550	5.0u	50	100u§	100 §∅	6 2k△	125J		S158a
61▼	C387P	1 0k	550 △	65	500	150	3 0	45	125	4.2	3 0k	2 0		30	200	5 5k	125	40	
62▼	C388P	1 0k	550 △	65	500	150	3.0	45	125	4 2	3 0k	2 0		20	200	5.5k	125	40	
63	270Z	1.0k	550	67		15	3.0	15m	125J	1.2	500				300	6 5k	125		S295
64▼#	TYC300SP10K2	1 0k	550	70C	31m	220m	3.5	24m	125J	1.7	1.0k				200 §	7 4k	125J	3.0 †	S372
65▼#	TY500SP10K2	1.0k	590	70C	31m	220m	3 5	24m	125J	1.6	1.0k				200 §	10k	125J	3 0 †	S372
66	C507P	1 0k	625 △	125J	100m	150m	4.0	50m	125C	1.4	500	5 0u	25	100u∅	100	6 5k	125J	26	M464
67	C508P	1 0k	625 △	125J	100m	150m	4 0	50m	125C	1 3	500	5.0u	25	60u∅	100	9 0k	125J	26	M464
68#	SH400N21	1 0k	630	115J		260m	3 5	35m	125J	1 9	1 2k	6.0u	400	50u	50	7.2k	115J	4 0 †	M433
69▼	420PM100	1 0k∅	660	60C	500m	150m	2 5	20m	125C	2 0 †	1 3k		500	40u§	200 §	5 5k△	125J	2 0 †	Y200c
70♦	420PA100S58	1.0k∅	660 △	68C	500m	150m	3 0	20m	125J	2 0 †	1 2k			40u∅	100 §	5 5k△	125J	16 ∅	Y200c
71#	2WDCR152-1003B	1 0k	700 △	40B	60m∅	150m	3 5	30m	125J	2.1	775				100	3.1k	125J		
72▼	C397P	1.0k	700 △	65	500	150	3 0	45	125	2.9	3.0k	2.0		45	200	7 5k	125	40	
73♦	C398P	1.0k	700 △	65	500	150	3.0	45	125	2.9	3 0k	2.0		30	200	7 5k	125	40	
74♦	470PB100T50	1.0k∅	740 △	67C	500m	150m	3 0	20m	125J	1.9 †	1 4k			50u∅	100 §	6 0k△	125J	16 ∅	Y200c
75▼#	FT800C20	1 0k	800	63C		200m	3 0	30m	125J	1.6 §	2 5k				200 △	14k△	125J	16 ∅	M566
76#	SF800N21	1.0k	800	125J		320m	4 0	35	125J	2.1	2 5k					13k	125J	20	M433
77♦	470PA100	1 0k∅	850	60C	500m	150m	3.0	20m	125C	1.7 †	1.7k		250	120u§	100 §	8 0k△	125J	3 0 †	Y200c
78▼#	YST801SP10K2	1.0k	1 0k	70C	100m	220m	3 5	24m	125J	1.6	1.8k				200 §	16k	125J	3 0 †	S371
79#	2WDCR7K1003B35	1 0k	1 2k△	40B	80m∅	150m	3.5	50m	125J	2.0	1.3k				100	7.5k	125J		
80#	2WDCR7K1103B4	1 0k	1 2k	40B	80m∅	150	3 5	50m†	125J	2.0	1 7k				100	7 5k	125	5.0 ∅	
81▼	C600P	1 0k	1 4k△	72	750	150	6 5			1.5	2.2k			250	100	13k	125	40	
82	C501P	1 1k			250m	150m	6.5	15m	25J	1.5 †	1 0k†		450	200u§	100 §	7.0k	125J	5.0 †	M464
83#	2WDCR7K1203B4	1 1k	1.2 △	40B	80m∅	150	3.5	50m†	125J	2.0	1 7k				100	7 5k	125	5 0 ∅	
84#	TR1110	1.1k	10	25A	50m∅	80m	3.0	5.0m	125J	2.2	30	2.0u§	10	50u§	50 ∅§	125		240m	S313
85#	CR6-1203RB	1.1k	10	70C	28m∅	80m	3.0	5 0m†	100C	2 0	16	2 3u	20	80u	20	100	125	5.0	
86#	CR6-1203RBA	1 1k	10	70C	28m∅	80m	3.0	5 0m†	100C	2 0	16	2 3u	20	80u	200	100	125	5 0	
87#	BTX47/1200R	1 1k	11.5	85B	10m∅	65m	3.5	5.0m	125	4 0	50	5.0u	10	50u		155 *	125J	500m†	S17b
88#	CR12-1203RB	1 1k	14.5	75C	28m∅	60m	3 0	5 0m†	125C	2.0	32	2.3u	20	85u	20	160	125	5 0	
89#	CR12-1203RBA	1.1k	14.5	75C	28m∅	60m	3 0	5 0m†	125C	2.0	32	2 3u	20	85u	200	160	125	5 0	
90#	TR11	1 1k	16	25A	50m∅	80m	3 0	3 0m	125J	2.0	50	2.0u§	10	50u§	50 ∅	250		240m	S313
91	202ZB	1 1k	16	58C		80m	3 5	4 0m	100J	1.6	10					125	100J		TO48
92#	BTX48/1200R	1 1k	16	85B	10m∅	65m	3 5	5 0m	125	2.7u	50	5.0u	10	50u		200 *	125J	500m†	S17b
93#	BTX92-1100R	1 1k§	16	85C	200m	150m	3.5	7.0m	125	2.7	50	2.0u	10		200	280 *	125	5.0 ∅	TO48
94	203ZB	1 1k	16	92C		80m	3.7	4 0m	125J	1.6	10					125	125J		TO48
95#	T15N1100C	1 1k	19	85C	200m	100m	3 0	10m	125J	2.5	50	2.5u∅	10	80u§	20 §	300 §	125J		S63g%
96#	T15N1100E	1 1k	19	85C	200m	100m	3 0	10m	125J	2.5	50	2 5u∅	10	80u§	20 §	300 §	125J		M351%
97#	TS1135	1 1k	22 5	25A	20m∅	80m	3 0	6 0m	125J	2.2	70	5.0u§	15	50u§	50 ∅§	250		240m	S313
98#	CR18-1203RB	1 1k	23	70C	28m∅	40m	3 0	5.0m†	125C	2.1	57	2 3u	20	85u	20	180	125	5 0	
99#	CR18-1203RBA	1 1k	23	70C	28m∅	40m	3 0	5.0m†	125C	2 1	57	2 3u	20	85u	200	180	125	5 0	
100#	CR181203RB	1 1k	23	75C	78m	40m	3 0	5.0m	125C	2.1	57				20 ∅§	180 *§	125J	5 0 ∅	S278
101	201ZB	1 1k	25	75C		40m	3 0	4 0m	125J	2 3	50					250	125J		TO48
102#	CS22-11	1 1k	25	75	200m	100m	3 0	10m	125	2 1	70			80u	200	400	125	75	
103#	24TB11	1 1k	25	84B		10	3 0	7 5m		2 3	31					180	125	1 0	S266
104#	26TB11	1.1k	25	84B		10	3 0	7 5m		2.3	31					180	125	1 0	S63a
105#	T22N1100C	1.1k	28	85C	200m	100m	3.0	10m	125J	1 9	60	2 5u∅	20	80u§	20 §	400 §	125J		S63g%
106#	T22N1100E	1.1k	28	85C	200m	100m	3.0	10m	125J	1 9	60	2.5u∅	20	80u§	20 §	400 §	125J		M353%

SYMBOLS AND CODES EXPLAINED IN INTERPRETER

6. SILICON CONTROLLED RECTIFIERS

IN ORDER OF (1) PEAK REV. VOLT., (2) MAX. CONT. CUR., (3) TEMPERATURE, (4) TYPE No.

LINE No	4 TYPE No.	1 PRV and VBO (V)	MAX. CONT. CURRENT 2 Idc (A)	3 at TEMP (°C)	MAX. HOLD. CUR Ih @ 25°C (A)	MAX. GATE FIRING SPEC at 25°C Igf (A)	Vgf (V)	MAX SAT I Ir@PRV and Is@VBO (A)	at TEMP (°C)	MAX. FWD. VOLT. DROP at 25°C Vf (V)	@ If (A)	SWITCHING TIME at 25°C Ton (s)	for If (A)	Toff (s)	MIN. dV/dt @ 25°C (V/us)	ABS. MAX. RATINGS 1Cy PK SURGE I@25°C (A)	MAX TEMP (°C)	MAX GATE POWER (W)	DWG. No.
1#	23TB11	1 1k	31	82B	200m	100m	3.0	7.5m		2.4	63					260	125C	1.0	S266
2#	25TB11	1.1k	31	82B	200m	100m	3 0	7 5m		2.4	63					260	125C	1 0	S63a
3#	TK11	1 1k	35	25A	50mØ	125m	3.0	10m	100J	2.0	100	5.0u§	100	100u§	50 §	700		375m	S317
4▼#	5TCA110	1 1k	35	125	60	100m	3 0							100u	100 §	1 5k	125	10	
5	35C110	1 1k	35	125J	200m§	200m	3 0	10m	125J	2.5	220	10u	35	40u§		900	125J	15 Ø	TO94#△
6	35C110B	1 1k	35	125J	200m§	200m	3.0	10m	125J	2.5	220	10u	35	40u§	100	900	125J	15 Ø	TO94#△
7	35C110BF	1 1k	35	125J	200m§	200m	3.0	10m	125J	2.5	220	10u	35	40u§	100	900	125J	15 Ø	TO83#△
8	35C110F	1 1k	35	125J	200m§	200m	3 0	10m	125J	2 5	220	10u	35	40u§		900	125J	15 Ø	TO83#△
9#	CR30-1103A	1 1k	36	25	66m	60m	3 0			1.4	30	20u	30	73u		500	125	5.0	TO49
10#	CR30-1203A	1 1k	36	85C	33mØ	60m	3 0	10m†	125C	2.0	100	3 5u	30	28u	20	660	125	5.0 Ø	TO49
11#	CR30-1204AA	1.1k	38	70C	20mØ	80m	3 0	10m†	125C	2 5	100	20u	100	20u⊘	20	660	125	5.0 Ø	TO49
12▼#	6TC110	1 1k	40			100m	3 0			1.3		10u		150u	50 §Ø	1 5k*	125J		S183a
13#	27TB11	1 1k	40	74B		.10	3 0	15m		2.1	78					450	125C	1.0	S63a
14#	CR24-1203RB	1 1k	40	80C	28mØ	40m	3 0	5.0m†	125C	1.4	50	2.3u	20	85u	20	320	125	5.0	
15#	CR24-1203RBA	1 1k	40	80C	28mØ	40m	3 0	5.0m†	125C	1 4	50	2.3u	20	85u	200	320	125	5.0 Ø	
16♦	40RCS110	1 1k⊘	40	87C	200m	110m	3.0	1.2m	105J	1.7 †	40	4.5u	10		25 §	1.0k§	105J	500m†	TO65
17▼#	6TCA110	1 1k	40	125	60	100m	3.0							100u	100 §	1 5k	125	10	
18	251ZB	1.1k	40	125J		100m	3.0	10m	125J	1.7	50	4.0u	50	100u	300	1.2k*	125J	3.0 †	Z59
19#	28TB11	1 1k	47	73B		10	3.0	15m		1.9	95					550	125	1.0	S63a
20#	29TB11	1.1k	55	68B		10	3.0	15m		1 8	110					650	125	1.0	S63a
21	NL576PA	1.1k	55	82	500m	150m	3.0			2 4	110				10	700	125	2.0	
22	NL577PA	1 1k	55	82C	50	15	3 0	3 0m	125J	2.4	110				200	700	125J	2.0 †	TO103
23	555PA	1.1k	55	99C		150m	3.0								200		125J		TO49
24	556PA	1 1k	55	99C		150m	3.0								200		125J		TO83
25	C145PA	1 1k	55 △	125J	500m	150m	3 0	6.5m	125C	2.4 †	110				200	700 △	125J	2.0 †	TO103
26#	BTX49-1100R	1 1k§	60	85C	150m	80m	3.0	13m	125J	3.5	500	5.0u	50	50u		1 0k	125J	1 0 †	TO94
27#	T50N1100	1.1k	62 5	85C	300m	100m	3.0	20m	125J	2 2	160	2 5u⊘	25	80u§	20 §	800 §	125J		M330b%
28#	CR50-1103A	1 1k	64	25	73m	100m	3 0									600	125	5.0	TO49
29#	40T14	1 1k	65	75B	200m	200m	.25	10m		2 1	200					1.1k	125B	1.0	M308
30#	CR50-1203A	1 1k	66	75C	32mØ	60m	3 0	10m†	125C	1.7	150	4.2u	150	70u	20	760	125	5 0 Ø	TO49
31#	TK1100	1 1k	70	25A	50mØ	125m	3 0	10m	125J	2.0	200	5.0u§	100	100u§	50 §	1.0k		375m	S317
32#	TK1110	1.1k	70	25A	50mØ	125m	3.0	10m	125J	2.0	200	5.0u§	100	100u§	50 §	1 0k		375m	S317
33	2N3096	1 1k	70 △	62C		200m$	3 0 $	2.5m	62C	1.9 †	70				20	1.0k§*	125C	500m†	TO49
34	2N3104	1 1k	70 △	62C		200m$	3 0 $	2 5m	62C	1.9 †	70				20	1 0k§*	125C	500m†	TO49
35	2N3992	1 1k	70	70C		200m$	3 0 $	15m	125C	2.9 †	220			50u	200 §	1.0k*	125C	10 Ø	TO94
36#	36TB11	1 1k	70	75B		.15	3 0	15m		2.0	140					760	125	1.0	S63d
37#	BTX50-1100R	1.1k§	70	85C	150m	80m	3 0	13m	125J	2 5	500	5.0u	50	50u		1 5k	125J	1.0 †	TO94
38#	10TC110	1 1k	70	125	100m	100m	3 0												
39▼#	10TCA110	1.1k	70	125	100	100m	3 0							100u	100 §	1.5k	125	10	
40	70C110	1 1k	70	125J	200m§	200m	3 0	10m	125J	1.8	220	10u	70	40u§		1 6k	125J	15 Ø	TO94#△
41	70C110B	1.1k	70	125J	200m§	150m	3 0	10m	125J	1.8	220	10u	70	40u§	100	1 6k	125J	15 Ø	TO94#△
42	70C110BF	1 1k	70	125J	200m§	150m	3.0	10m	125J	1 8	220	10u	70	40u§	100	1 6k	125J	15 Ø	TO94#△
43	70C110C	1 1k	70	125J	200m§	100m	2 0	10m	125J	1 8	220	10u	70	40u§		1 6k	125J	15 Ø	TO94#△
44	70C110CF	1.1k	70	125J	200m§	100m	2 0	10m	125J	1 8	220	10u	70	40u§		1.6k	125J	15 Ø	TO83#△
45	70C110F	1 1k	70	125J	200m§	200m	3 0	10m	125J	1 8	220	10u	70	40u§		1.6k	125J	15 Ø	TO83#△
46▼#	12TC110	1 1k	80		100m	100m	3.0			1 5		10u		150u	50 §	1 5k*	125J		S183b
47#	CR31-1203A	1 1k	80	55C	38mØ	60m	3 0	10m†	125C	1.7	100	3 7u	100	130u	20	700	135J	5.0 Ø	TO49
48#	CR31-1204AA	1.1k	80	55C	38mØ	60m	3 0	10m†	125C	1.7	100	5.7u	100	20u⊘	20	700	135J	5 0 Ø	TO49
49	36RA110	1 1k⊘	80 △	75C	500m	150m	2.5	9 0m	125C	2 2 †	160				200 §	1 0k△	125J	2 0 †	TO94
50	36RE110	1 1k⊘	80 △	75C	500m	150m	2 5	5 0m	125C	2.2 †	160				10 §	1.0k△	125J	2 0 †	TO94
51	37RA110	1.1k⊘	80 △	75C	500m	150m	2.5	9 0m	125C	2 2 †	160				200 §	1 0k△	125J	2.0 †	TO83
52	37RE110	1 1k⊘	80 △	75C	500m	150m	2.5	5.0m	125C	2.2 †	160				10 §	1 0k△	125J	2.0 †	TO83
53	36REH110	1 1k⊘	80 △	100C	500m	150m	2 5	15m	150C	2 1 †	160				10 §	900 △	150J	2.0 †	TO94
54	37REH110	1 1k⊘	80 △	100C	500m	150m	2.5	15m	150C	2.1 †	160				10 §	900 △	150J	2.0 †	TO83
55▼#	12TCA110	1.1k	80	125	100	100m	3.0							100u	100 §	1.5k	125	10	
56	250ZB	1.1k	80	125J		100m	3 0	10m	125J	1 3	50	4 0u	50	100u	300	1 6k*	125J	3.0 †	Z59
57#	37TB11	1.1k	85	66B		15	3 0	15m		1.9	175					930	125	1.0	S63d
58#	CR70-1201A	1 1k	85	75C		100m	3.0	30m†	125C	1 7	210				20	1.0k	125	5.0	TO49
59#	CR70-1201C	1 1k	85	75C		100m	3 0	30m†	125C	1.7	210				20	1.0k	125	5.0	M376
60#	CS80-11	1.1k	90	75	50m	80m	3 0	15m	125	1.5	200			70	1.0k	1.2k	45	10	
61#	TT11	1 1k	100	25A	50mØ	500m	3 0	25m	100J	2.2	350	5.0u§	100	100u§	50 §	2.0k		1.5	S204a
62#	38TB11	1 1k	100	62B		15	3.0	15m		1.8	205					1.0k	125	1.0	S63d
63	100C110	1 1k	100	125J	200m	200m	2.5	25m	125J	2 0	500	10u	100	40u§		2.0k	125J	10 Ø	TO93#△
64	100C110B	1.1k	100	125J	200m	200m	2.5	25m	125J	2.0	500	10u	100	40u§	100	2.0k	125J	10 Ø	TO93#△
65#	CR51-1203A	1.1k	105	55C	38mØ	60m	3 0	10m†	125C	1 6	150	3 4u	120	185u	20	760	135J	5 0	TO49
66	72RE110	1.1k§	110	60C	15mØ	70m	2 0	2.5mØ	125J	1.8	220					1.0k△	125J	5.0 Ø	TO83
67	72RE110A	1 1k§#	110	60C	15mØ	70m	2.0	2 5mØ	125J	1 8	220					1.0k△	125J	5 0 Ø	TO83
68	71RB110	1 1k⊘	110 △	65C	500m	150m	2 5	9 0m	125J	2.5 †	220	2.0u	50	30u§	200 △	1.2k△	125J	2.0 †	TO94
69	71REB110	1.1k⊘	110 △	65C	500m	150m	2 5	5.0m	125J	2.5 †	220	2.0u	50	30u§	200 △	1 2k△	125J	2.0 †	TO94
70	72RB110	1 1k⊘	110 △	65C	500m	150m	2 5	9.0m	125J	2.5 †	220	2.0u	50	30u§	200 △	1.2k△	125J	2.0 †	TO83
71	72REB110	1 1k⊘	110 △	65C	500m	150m	2 5	5.0m	125J	2.5 †	220	2.0u	50	30u§	200 △	1.2k△	125J	2.0 †	TO83
72	C150PA△	1 1k	110 △	70C	500m	150m	3.0	14m	120C	2 6	500	8 0u	50	100u§	200	1 5k	125J	10	TO94
73	C151PA△	1 1k	110 △	70C	500m	150m	3.0	14m	120C	3 5	500	8 0u	50	50u§	200	1 0k	125J	10	S91
74	C152PA△	1.1k	110 △	70C	500m	150m	3 0	14m	120C	2.6	500	8.0u	50	100u§	200	1.5k	125J	10	S315
75	C153PA△	1 1k	110 △	70C	500m	150m	3 0	14m	120C	3.5	500	8.0u	50	50u§	200	1 0k	125J	10	S108
76	71RA110	1 1k⊘	110 △	80C	500m	150m	2.5	9 0m	125J	1 9 †	220	2 0u	50	50u§	200 △	1 6k△	125J	2.0 †	TO94
77	71REA110	1.1k⊘	110 △	80C	500m	150m	2 5	5.0m	125J	1 9 †	220	2.0u	50	50u§	200 △	1 6k△	125J	2 0 †	TO94
78	72RA110	1 1k⊘	110 △	80C	500m	150m	2.5	9 0m	125J	1 9 †	220	2 0u	50	50u§	200 △	1 6k△	125J	2 0 †	TO83
79	72REA110	1 1k⊘	110 △	80C	500m	150m	2 5	5 0m	125J	1.9 †	220	2.0u	50	50u§	200 △	1 6k△	125J	2 0 †	TO83
80	NLF151PA	1 1k	110	80C	500m	150m	2.5	8.0m	125J	2.6 †	500	8.0u	50	50u⊘	200	1 4k	125J	2 0 †	TO94
81	71REJ110	1.1k⊘	110 △	90C	500m	150m	2.5	15m	150J	2.5 †	220	2 0u	50	50u§	50 △	1.0k△	150J	2 0 †	TO94
82	72REJ110	1 1k⊘	110 △	90C	500m	150m	2.5	15m	150J	2 5 †	220	2 0u	50	50u§	50 △	1 0k△	150J	2 0 †	TO83
83	NLC150PA	1 1k	110	90C	50	15	2 5	6 0m	125J	2 6	500	8 0u	50	100u	200	1 8k	125J	2.0 †	TO49
84	NLC152PA	1.1k	110	90C	.50	15	2 5	6.0m	125J	2.6	500	8 0u	50	100u	200	1.8k	125J	2 0 †	TO83
85	NLC350PA	1 1k	110	90C	50	15	2 5	4 0m	125J	2 6	500	8 0u	5.0	100u	200	1.8k	125J	2 0 †	M456
86	71REH110	1 1k⊘	110 △	105C	500m	150m	2 5	15m	150J	1.9 †	220	2 0u	50	60u§	50 △	1.4k△	150J	2 0 †	TO94
87	72REH110	1.1k⊘	110 △	105C	500m	150m	2 5	15m	150J	1.9 †	220	2.0u	50	60u§	50 △	1 4k△	150J	2.0 †	TO83
88#	CR100-1201C	1 1k	125	80C	30mØ	100m	3.0	30m†	125C	1 7	300			100	20	1.5k	125	5.0	M376
89#	CR100-1201D	1.1k	125	80C	30mØ	100m	3 0	30m†	125C	1.7	300			100	20	1 5k	125	5 0	TO49
90#	42TB11	1 1k	135	57B		20	3 0	15m		2.2	265					1.4k	125	1.5	M308
91♦#	30TC110	1.1k	140		150m	100m	3 0			1.5					50 §Ø	3 5k*	125J		S348
92#	20TC110	1.1k	140	125	150m	100m	3 0												
93▼#	20TCA110	1 1k	140	125	150	100m	3.0							100u	100 §	3.0k	125	10	
94#	TT2110	1 1k	150	25A	50mØ	500m	3 0	25m	125J	1 7	450	5.0u§	100	100u§	50 §	3.2k		1.5	S204a
95	150C110	1 1k	150	125J	200m	200m	2 5	25m	125J	1 7	500	10u	150	40u§		3.0k	125J	10 Ø	TO93#△
96	150C110B	1 1k	150	125J	200m	200m	2 5	25m	125J	1 7	500	10u	150	40u§	100	3.0k	125J	10 Ø	TO93#△
97	101RA110	1 1k⊘	160 △	80C	500m	150m	2.5	14m	125J	2 1 †	314	2 0u	150	50u§	200 △	2 0k△	125J	2 0 †	TO93
98	101RE110	1 1k⊘	160 △	80C	500m	150m	2 5	8 0m	125J	2 1 †	314	2.0u	150	35u§	4 0 △	2.0k△	125J	2.0 †	TO93
99♦	115PA110	1 1k⊘	170 △	85C	500m	150m	2 5	15m	125C	2 3 †	340				200 §	1.6k△	125J	2 0 †	Y200b
100#	43TB11	1 1k	175	62B		20	3 0	15m		2 2	390					1 9k	125	1.5	M308
101	C350PA	1 1k	175	80C	500m	150m	3 0		25	2 6	500	8.0u	50	100u	200	1.5k	120C	2 0	M514
102	C358PA	1.1k	180 △	125J	500m	150m	3 0	11m	125C	3 5	500	2.0u	50	30u⊘	200	1 2k	125J	2.0	M514
103#	CS130-11	1 1k	190	55	100m	150m	3 0	30m	125	1.7	400			60u	1 0k	3 5k	125	30	
104#	46TB11	1 1k	195	56B		20	3 0	15m		2 0	390					2 1k	125	1 5	M308
105	261ZB	1 1k	200	80		15	3.0	15m	125J	1 4	100				300	3 3k	125		TO93
106	263ZB	1 1k	200	85		.15	3 0	15m	125J	1.3	50				300	1 6k	125		M414
107#	TT3110	1 1k	200	85C	40mØ	500m	3 0	25m	125J	1 6	600	5 0u§		100u§	100 Ø§	4.0k		1 5	S204a
108▼#	30TCA110	1.1k	200	125	150	100m	3 0								100 §	5.5k	125	10	
109#	CR153-1203A	1 1k	220	70C	35mØ	150m	3 5	30m†	125C	1 6	450				100	3 0k	125	5.0 Ø	M201
110#	CR152-1203A	1.1k	230	70C	35mØ	150m	3.5	30m†	125C	1 5	450				100	3 1k	125	5 0	M201

SYMBOLS AND CODES EXPLAINED IN INTERPRETER

6. SILICON CONTROLLED RECTIFIERS

IN ORDER OF (1) PEAK REV. VOLT., (2) MAX. CONT. CUR., (3) TEMPERATURE, (4) TYPE No.

LINE No	4 TYPE No.	1 PRV and VBO (V)	MAX. CONT. CURRENT 2 Idc (A)	3 at TEMP (°C)	MAX. HOLD. CUR Ih @ 25°C (A)	MAX. GATE FIRING SPEC at 25°C Igf (A)	Vgf (V)	MAX SAT I Ir@PRV and Is@VBO (A)	at TEMP (°C)	MAX. FWD. VOLT. DROP at 25°C Vf (V)	@ If (A)	SWITCHING TIME at 25°C Ton (s)	for If (A)	Toff (s)	MIN. dV/dt @ 25°C (V/us)	ABS. MAX. RATINGS 1Cy PK SURGE I@25°C (A)	MAX TEMP (°C)	MAX GATE POWER (W)	DWG. No.
1	151RB110	1 1k∅	235 △	75C	500m	150m	2.5	14m	125J	2.2 †	471	2.0u	150	40u§	200 △	2.5k△	125J	2.0 †	TO93
2	151REB110	1.1k∅	235 △	75C	500m	150m	2.5	8.0m	125J	2.2 †	471	2.0u	150	40u§	200 △	2.5k△	125J	2 †	TO93
3	C180PA△	1.1k	235 △	80C	500m	150m	3.0	7.0m	25	2.9 †	1.5k	8.0u	100	125u	200	3.5k	125C	2.0	TO93
4	NLF180PA	1 1k	235	80C	500m	150m	2.5	12m	125J	2.9 †	1.5k	8.0u	100	125u§	200	3.5k	125J	2.0 †	TO93
5	151RA110	1.1k∅	235 △	85C	500m	150m	2.5	14m	125J	1.8 †	471	2.0u	150	60u§	200 △	3.5k△	125J	2.0 †	TO93
6	151REA110	1.1k∅	235 △	85C	500m	150m	2.5	8.0m	125J	1.8 †	471	2.0u	150	60u§	200 △	3.5k△	125J	2 †	TO93
7♦	C280PA	1.1k	235	85C	100m	150m	3.0			1.4	500	10u	5.0	250u§	100 §	3.5k	125J	3.0	S132
8▼	C281PA	1 1k	235	85C	100m	150m	3.0			1.4	500	10u	5.0	250u§	100 §	3.5k	125J	3.0	S247a
9#	CR151-1203A	1.1k	240	70C	35m∅	150m	3.5	30m†	125C	1.4	450				100	3.3k	125	5.0	M201
10#	61TB11	1.1k	275	67B		.30	3.0	40m		2.4	665					3.2	125	2.0	M308a
11	260ZB	1.1k	275	80		.15	3.0	15m	125J	1 2	100				300	5.0k	125		TO93
12♦	175PA110	1 1k∅	275 △	85C	500m	150m	2.5	20m	125C	2.3 †	550				200 §	3.0k△	125J	2.0 †	Y200b
13♦#	40TC110	1.1k	300		150m	100m	3 0			1 5					50 §∅	4.5k*	125J		S348
14	273ZB	1.1k	300	70		.15	3.0	15m	125J	1.3	100				300	3.3k	125		M414
15▼#	40TCA110	1 1k	300	125	150	100m	3 0								100 §	5.5k	125	10	
16	2248ZB	1.1k	300	125J		300m	4.0	10m	125J	1 0 §	100	5.0u	150	50u	100	5.0k*	125J	3.0 †	M308c
17#	62TB11	1 1k	315	65B		30	3.0	40m		2.2	665					3.7k	125	2.0	M308a
18#	CR253-1203A	1.1k	320	40C	35m∅	150m	3 5	30m†	125C	1 6	450				100	3.5k	125	5.0 ∅	M201
19#	CR252-1203A	1 1k	336	50C	35m∅	150m	3 5	30m†	125C	1.5	450				100	3.6k	125	5.0	M201
20#	70TB11	1.1k	355	67B		.30	3.0	40m		2.2	850					4.1	125	2.0	M308a
21	C380PA	1.1k	380	65C	500m	150m	3.0 §	7 0m	25C	2.8	1.5k	8.0u	100	100u	200	3.5k	120	2.0	M514
22♦	250PA110	1.1k∅	390 △	70C	500m	150m	2 5	20m	125C	2.3 †	780				200 §	4 2k△	125J	2.0 †	Y200b
23▼	250RM110	1.1k∅	400	60C	500m	150m	2 5	18m	125C	1.7 †	785		500	40u§	200 §	5.5k△	125J	2.0 †	TO118
24▼	251RM110	1.1k∅	400	60C	500m	150m	2 5	18m	125J	1.7 †	785		500	40u§	200 §	5.5k△	125J	2 0 †	TO108
25#	71TB11	1.1k	400	65B		30	3 0	40m		2.0	850					4.6k	125	2.0	M308a
26	250RA110	1.1k∅	400 △	75C	100m	150m	3 0	18m	125J	1.7 †	785	5.0u	250	40u§	100 △∅	5 0k△	125J	3.0 †	TO118
27#	73TB11	1 1k	430	64B		.30	3.0	40m		2.0	1.0k					5.1k	125	2.0	M308a
28#	CR7K1203A45	1.1k	435	65C	55m∅	150m	3.5	50m	125J	1.8	1.0k	3.5u	600	180u	100	6.0k	125J	5.0 ∅	M308b
29#	CR7K1203A4	1.1k	460	65C	55m∅	150m	3.5	50m	125J	1.7	100	3.5u	600	180u	100	6.4k	125J	5.0 ∅	M308b
30	276ZB	1.1k	470			.15	3.0	15m	125J	1.2	100				300	5.5k	125		M247
31	304RA110	1.1k∅	470 △	5A	500m	150m	3.0	18m	125C	1.6 †	940					6.0k△	125J	3.0 †	TO109#
32#	74TB11	1.1k	470	63B		300m	3.0	40m		1.8	1.0k					5 6k	125	2.0	M308a
33♦	C290PA	1.1k	470	65C	100m	150m	3.5			1.2	500	10u	5.0	250u§	100 §	5.5k	125J	3.0	S132
34♦	C291PA△	1.1k	470	65C	100m	150m	3 5			1.2	500	10u	5.0	250u§	100 §	5.5k	125J	3.0	S247a
35	C291PA∅	1 1k	470	66C	100m	150m	3.0	15m	125J	1.2 †	500	5.0u	5.0	100u§	100 §	5 5k	125J	3.0 †	M331a
36	NLF291PA	1.1k	470	66C	100m	150m	2.5	15m	125J	1.2 †	500	5.0u	5.0	100u§	100	5 5k	125J	3.0 †	
37	272ZB	1.1k	470	71		15m	3.0	15m	125J	1 2	100				300	5 5k	125		M414
38	300RA110	1 1k∅	470 △	75C	100m	150m	3.0	18m	125J	1 4 †	945	5.0u	250	50u§	100 ∅△	5.5k△	125J	3 0 †	TO118
39	300RB110	1.1k∅	470 △	75C	100m	150m	3.0	18m	125J	1.6 †	945	5.0u	250	50u§	25 △	5 5k△	125J	3.0 †	TO118
40#	CR7K1203A35	1 1k	480	65C	140m	150m	3 5	50m	125J	1.6	1.0k	3.5u	600	180u	100	6.9k	125J	5.0 ∅	M308b
41#	80TB11	1 1k	510	59B		.30	3.0	40m		1 5	1 2k					6.4k	125	2.0	M308a
42#	CR7K1203A3	1 1k	520	55C	140m	150m	3 5			1.5	1.0					7.0k	125J	5.0 ∅	M308b
43▼	NLC501PA	1 1k	550	25	250m	150m	6 5 §			1.5	1 0k			200u§	100 §	7 0k	125J	5.0 †	M593
44#	81TB11	1 1k	550	56B		.30	3 0	40m		1.7	1.2k					7.0k	125	2.0	M308a
45	350RA110	1 1k	550	65C	100m	150m	3 0	18m	125J	1.4	550	5.0u	50	100u§	100 §∅	6 2k△	125J	3.0	S158a
46▼	C387PA	1 1k	550 △	65	500	150	3.0	45	125	4 2	3.0k	2.0		30	200	5.5k	125	40	
47▼	C388PA	1.1k	550 △	65	500	150	3.0	45	125	4.2	3.0k	2.0		20	200	5.5k	125	40	
48	270ZB	1 1k	550	67		.15	3 0	15m	125J	1.2	500				300	6 5k	125		S295
49	C507PA	1 1k	625 △	125J	100m	150m	4 0	50m	125C	1.4	500	5.0u	25	100u∅	100	6.5k	125J	26	M464
50	C508PA	1 1k	625 △	125J	100m	150m	4 0	50m	125C	1.3	500	5.0u	25	60u∅	100	9 0k	125J	26	M464
51▼	420PM110	1.1k∅	660	60C	500m	150m	2.5	18m	125C	2.0 †	1 3k		500	40u§	200 §	5 5k△	125J	2.0 †	Y200c
52♦	420PA110T50	1.1k∅	660 △	68C	500m	150m	3 0	18m	125J	2.0 †	1 2k			50u∅	100 §	5.5k△	125J	16 ∅	Y200c
53#	2WDCR152-1103B	1.1k	700 △	40B	60m∅	150m	3 5	30m	125J	2.1	775				100	3.1k	125J		
54▼	C397PA	1 1k	700 △	65	500	150	3.0	45	125	2.9	3.0k	2.0		45	200	7.5k	125	40	
55♦	C398PA	1 1k	700 △	65	500	150	3 0	45	125	2.9	3 0k	2.0		30	200	7 5k	125	40	
56♦	470PB110T52	1 1k∅	740 △	67C	500m	150m	3 0	18m	125J	1.9 †	1.4k			60u∅	100 §	6.0k△	125J	16 ∅	Y200c
57♦	470PA110	1 1k∅	850	60C	500m	150m	3.0	18m	125C	1 7 †	1 7k		250	120u§	100 §	8.0k△	125J	3.0 †	Y200c
58▼	C601PA	1.1k	1.1k△	72	500	150	6.5					4.0		300	100	10k	125	40	
59#	5TC110	1.1k	1 1k	125	6.0	100m	3 0												
60#	2WDCR7K1103B35	1 1k	1.2k△	40B	80m∅	150m	3.5	50m	125J	2 0	1 3k				100	7.5k	125J		
61▼	C600PA	1.1k	1.4k△	72	750	150	6 5			1 5	2.2k			250	100	13k	125	40	
62	C501PA	1.2k			250m	150m	6.5	15m	25J	1.5 †	1 0k†		450	200u§	100 §	7.0k	125J	5.0 †	M464
63	C501PB	1.2k			250m	150m	6.5	15m	25J	1.5 †	1.0k†		450	200u§	100 §	7.0k	125J	5 0 †	M464
64#	CS0 6-12	1.2k	650m		20m	10m	3 0			1.4	2 0			60u	200	35	125	10	
65#	CS1-12	1.2k	650m		50m	30m	3.0	1 0m	125	1.4	4 0			60u	200	55	125	10	
66#	2WDCR7K1303B4	1 2k	1 2 △	40B	80m∅	150	3 5	50m†	125J	2.0	1.7k				100	7.5k	125	5.0 ∅	
67#	CS5-12	1.2k	6 2	100	50m	30m	3.0	3 0m	125	1.7	20			60u	200	110	125	10	
68#	CS8-12	1 2k	8 2	100	50m	30m	3 0	3.0m	125	1.6	26			60u	200	170	125	10	
69#	TR1210	1.2k	10	25A	50m∅	80m	3.0	5 0m	125J	2 2	30	2.0u§	10	50u§	50 ∅§	125		240m	S313
70#	CR6-1303RB	1 2k	10	70C	28m∅	80m	3 0	5 0m†	100C	2.0	16	2.3u	20	80u	20	100	125	5 0	
71#	CR6-1303RBA	1 2k	10	70C	28m∅	80m	3 0	5.0m†	100C	2 0	16	2.3u	20	80u	200	100	125	5.0	
72#	2SF719	1 2k	11	50B		40m	3.0	4 5m	100J	2.8	50				100	125	100J	500m	S18c
73#	CR12-1303RB	1 2k	14 5	75C	28m∅	60m	3.0	5.0m†	125C	2 0	32	2.3u	20	85u	20	160	125	5.0	
74#	CR12-1303RBA	1.2k	14 5	75C	28m∅	60m	3.0	5.0m†	125C	2 0	32	2.3u	20	85u	200	160	125	5.0	
75#	TR12	1.2k	16	25A	50m∅	80m	3 0	3 0m	125J	2.0	50	2.0u§	10	50u§	50 ∅	250		240m	S313
76	202ZD	1 2k	16	58C		80m	3.5	4 0m	100J	1.6	10					125	100J		TO48
77♦#	BStC0380	1.2k	16	59C	30m	30m	2.5	3.0	125J	1.9	27				200	180 §	125	10	
78	511-6	1.2k	16	70C		80m	3.0								200		100J		TO48
79	NL511-4	1 2k	16	70C	20m∅	80m	3.0	2.0m∅	100J	2.5	30	3.0u	10	12u	20	150	100J	5.0	TO48
80♦#	BStD0380	1 2k	16	85C	30m	30m	2.5	3.0	125J	1.6	33				200	250 §	125	10	
81#	BTX92-1200R	1.2k§	16	85C	200m	150m	3.5	7 0m	125	2.7	50	2.0u	10		200	280 *	125	5 0 ∅	TO48
82	203ZD	1 2k	16	92C		80m	3 7	4.0m	125J	1 6	10					125	125J		TO48
83#	T15N1200C	1.2k	19	85C	200m	100m	3.0	10m	125J	2.5	50	2.5u∅	10	80u§	20 §	300 §	125J		S63g%
84#	T15N1200E	1 2k	19	85C	200m	100m	3.0	10m	125J	2.5	50	2.5u∅	10	80u§	20 §	300 §	125J		M351%
85#	CS16-12	1.2k	19	95	50m	80m	3.0	3.0m	125	1.8	60			60u	200	350	125	10	
86#	CR20F24	1.2k	20	86C		50m	3.0	4.0m	125J	1.8	60				50 △	300 △	125J	5.0 ∅	S106b
87	2N5207	1.2k	22	40A	200m$	80m$	3.0 $	1.7m	125A	2.3	70				100 §	300	125A	500m†	TO48
88#	2SF729	1.2k	22	64B		40m	3.0	4.5m	125J	2.0	50				100	150	125J	500m	S18c
89#	TS1235	1 2k	22 5	25A	20m∅	80m	3 0	6.0m	125J	2 2	70	5.0u§	15	50u§	50 ∅§	250		240m	S313
90#	CR18-1303RB	1 2k	23	70C	28m∅	40m	3 0	5.0m†	125C	2.1	57	2.3u	20	85u	20	180	125	5 0	
91#	CR18-1303RBA	1 2k	23	70C	28m∅	40m	3.0	5 0m†	125C	2.1	57	2 3u	20	85u	200	180	125	5.0	
92#	CR181303RB	1 2k	23	75C	78m	40m	3.0	5.0m	125C	2 1	57				20 ∅§	180 *§	125J	5.0 ∅	S278
93	10RC120A	1.2k∅	25 △	45C	10m∅	90m	2 5	1 5m∅	125C	2 8	50 †	3.0u	10	30u	25 §	200 △	125J	.50 †	TO48
94	201ZD	1.2k	25	75C		40m	3 0	4 0m	125J	2 3	50					250	125J		TO48
95#	CS22-12	1 2k	25	75	200m	100m	3 0	10m	125	2 1	70			80u	200	400	125	75	
96#	24TB12	1.2k	25	84B		.10	3 0	7.5m		2 3	31					180	125	1 0	S266
97#	26TB12	1.2k	25	84B		10	3 0	7.5m		2.3	31					180	125	1.0	S63a
98#	BStE0280	1 2k	25	85C	100m	100m	3 0	10m	125J					150u§	20 §	300	125J		
99#	T22N1200C	1 2k	28	85C	200m	100m	3 0	10m	125J	1.9	60	2 5u∅	20	80u§	20 §	400 §	125J		S63g%
100#	T22N1200E	1.2k	28	85C	200m	100m	3 0	10m	125J	1 9	60	2.5u∅	20	80u§	20 §	400 §	125J		M353%
101#	23TB12	1 2k	31	82B	200m	100m	3 0	7 5m		2.4	63					260	125C	1.0	S266
102#	25TB12	1.2k	31	82B	200m	100m	3 0	7 5m		2 4	63					260	125C	1 0	S63a
103	C137PB	1 2k	35 △	18C	100m	40m	3 0 §	3 5m	120C	2 3	70				100	360	120J	2.0 †	TO48
104#	TK12	1 2k	35	25A	50m∅	125m	3 0	10m	100J	2 0	100	5 0u§	100	100u§	50 §	700		375m	S317
105#	TK13	1 2k	35	25A	50m∅	125m	3 0	10m	100J	2.0	100	5 0u§	100	100u§	50 §	700		375m	S317
106	C35P∅	1 2k	35	62C	10m∅	40m	2 5	2 0m∅	125J	2 0 †	50	1 4u	5 0	30u§	20 §	200	125J	500m†	TO48
107▼#	5TCA120	1 2k	35	125	60	100m	3 0							100u	100 §	1 5k	125	10	

SYMBOLS AND CODES EXPLAINED IN INTERPRETER

6. SILICON CONTROLLED RECTIFIERS

IN ORDER OF (1) PEAK REV. VOLT., (2) MAX. CONT. CUR., (3) TEMPERATURE, (4) TYPE No.

LINE No.	4 TYPE No.	1 PRV and VBO (V)	MAX. CONT. CURRENT 2 Idc (A)	3 at TEMP (°C)	MAX. HOLD. CUR Ih @ 25°C (A)	MAX. GATE FIRING SPEC at 25°C Igf (A)	Vgf (V)	MAX SAT I Ir@PRV and Is@VBO (A)	at TEMP (°C)	MAX. FWD. VOLT. DROP at 25°C Vf (V)	@ If (A)	SWITCHING TIME at 25°C Ton (s)	for If (A)	Toff (s)	MIN. dV/dt @ 25°C (V/us)	ABS. MAX. RATINGS 1Cy PK SURGE I@25°C (A)	MAX TEMP (°C)	MAX GATE POWER (W)	DWG. No
1	35C120	1 2k	35	125J	200m§	200m	3.0	10m	125J	2.5	220	10u	35	40u§		900	125J	15 Ø	TO94#△
2	35C120B	1.2k	35	125J	200m§	200m	3 0	10m	125J	2 5	220	10u	35	40u§	100	900	125J	15 Ø	TO94#△
3	35C120BF	1 2k	35	125J	200m§	200m	3.0	10m	125J	2 5	220	10u	35	40u§	100	900	125J	15 Ø	TO83#△
4	35C120F	1 2k	35	125J	200m§	200m	3.0	10m	125J	2 5	220	10u	35	40u§		900	125J	15 Ø	TO83#△
5#	CR30-1303A	1.2k	36	85C	33mØ	60m	3 0	10m†	125C	2 0	100	3 5u	30	28u	20	660	125	5 0 Ø	TO49
6▼#	6TC120	1.2k	40			100m	3 0			1.3		10u		150u	50 §Ø	1.5k*	125J		S183a
7#	2SF739	1 2k	40	70B		40m	3.0	7 0m	125J	1 7	50				100	300	125J	500m	S18c
8#	27TB12	1 2k	40	74B		.10	3.0	15m		2 1	78					450	125C	1.0	S63a
9#	CR24-1303RB	1.2k	40	80C	28mØ	40m	3.0	5.0m†	125C	1.4	50	2.3u	20	85u	20	320	125	5 0	
10#	CR24-1303RBA	1 2k	40	80C	28mØ	40m	3 0	5.0m†	125C	1 4	50	2 3u	20	85u	200	320	125	5.0 Ø	
11▼#	6TCA120	1.2k	40	125	60	100m	3 0							100u	100 §	1.5k	125	10	
12	251ZD	1.2k	40	125J		100m	3.0	10m	125J	1 7	50	4.0u	50	100u	300	1.2k*	125J	3.0 †	Z59
13▼#	SKT45-12A	1 2k	45	85C	130m	100m	3.0			1 8	50			50u	50 §Ø	800	130A	300m	S354
14▼#	SKT45-12B	1 2k	45	85C	130m	100m	3 0			1 8	50			50u	50 §	800	130A	300m	S354
15▼#	SKT45-12BX	1.2k	45	85C	130m	100m	3.0			1 8	50			40u⊘	50 §	800	130A	300m	S354
16▼#	SKT45-12C	1.2k	45	85C	130m	100m	3.0			1.8	50			50u	200 §	800	130A	300m	S354
17▼#	SKT45-12CX	1 2k	45	85C	130m	100m	3 0			1 8	50			40u⊘	200 §	800	130A	300m	S354
18▼#	SKT45-12D	1.2k	45	85C	130m	100m	3.0			1.8	50			50u	500 §	800	130A	300m	S354
19▼#	SKT45-12DX	1.2k	45	85C	130m	100m	3 0			1.8	50			40u⊘	500 §	800	130A	300m	S354
20▼#	SKT45-12E	1.2k	45	85C	130m	100m	3 0			1 8	50			50u	1 0k§	800	130A	300m	S354
21▼#	T130N1200	1.2k	45	85C	200m	150m	1 4	30m	125J	1.8	500	7 5u	100	60u	50	3.5k§	125J		M330d
22#	28TB12	1.2k	47	73B		.10	3.0	15m		1 9	95					550	125	1 0	S63a
23#	29TB12	1 2k	55	68B		.10	3.0	15m		1 8	110					650	125	1.0	S63a
24	NL576PB	1 2k	55	82	500m	150m	3.0			2 4	110				10	700	125	2 0	
25	NL577PB	1.2k	55	82C	.50	15	3 0	3 0m	125J	2.4	110				200	700	125J	2 0 †	TO103
26	NL555P	1.2k	55	89C	300m	150m	2.5	6 0m	125J	3.5 †	500	8.0u	50	100u§	200 §	1.2k	125J	2.0 †	TO49
27	NL556P	1 2k	55	89C	300m	150m	2.5	6 0m	125J	3.5 †	500	8.0u	50	100u§	200 §	1.2k	125J	2 0 †	TO83
28	555PB	1.2k	55	99C		150m	3 0								200		125J		TO49
29	556PB	1.2k	55	99C		150m	3 0								200		125J		TO83
30#	2SF709	1.2k	55	100C		100m	3 5	10m	100J	2.7	500					700	100J	500m†	S104a
31	C145PB	1 2k	55 △	125J	500m	150m	3.0	6 0m	125C	2.4 †	110				200	700 △	125J	2 0 †	TO103
32#	BTX49-1200R	1.2k§	60	85C	150m	80m	3 0	13m	125J	3.5	500	5.0u	50	50u		1 0k	125J	1 0 †	TO94
33#	T50N1200	1.2k	62.5	85C	300m	100m	3 0	20m	125J	2.2	160	2.5u⊘	2.5	80u§	20 §	800 §	125J		M330b%
34#	40T15	1.2k	65	75B	200m	200m	25	10m		2 1	200					1.1k	125B	1 0	M308
35#	CR50-1303A	1.2k	66	75C	32mØ	60m	3 0	10m†	125C	1.7	150	4.2u	150	70u	20	760	125	5 0 Ø	TO49
36#	TK1120	1.2k	70	25A	50mØ	125m	3 0	10m	125J	2.0	200	5 0u§	100	100u§	50 §	1.0k		375m	S317
37	2N3097	1.2k	70 △	62C		200m$	3 0 $	2 5m	62C	1 9 †	70				20	1.0k§*	125C	500m†	TO49
38	2N3105	1.2k	70 △	62C		200m$	3 0 $	2.5m	62C	1.9 †	70				20	1.0k§*	125C	500m†	TO49
39#	36TB12	1.2k	70	75B		15	3 0	15m		2.0	140					760	125	1.0	S63d
40	2N4367	1.2k	70	82C	200m	250m$	5.0 $	10m	125C	2.0 †	70				100	1 6k*§	125C	15 Ø	TO94
41	2N4377	1 2k	70	82C	200m	250m$	5 0 $	10m	125C	2 0 †	70				100	1 6k*§	125C	15 Ø	TO83
42#	CR70C24	1.2k	70	83C		100m	3.0	15m	125J	1.8	220 §				100 △	1.5k△	125J	5 0 Ø	S332
43#	BTX50-1200R	1.2k§	70	85C	150m	80m	3.0	13m	125J	2 5	500	5 0u	50	50u		1 5k	125J	1 0 †	TO94
44▼#	SKT70-12A	1 2k	70	85C	150m	150m	3 0			1 8	60			70u	50 §Ø	1.7k	130A	500m	S260c
45▼#	SKT70-12B	1.2k	70	85C	150m	150m	3.0			1 8	60			70u	50 §	1.7k	130A	500m	S260c
46▼#	SKT70-12BX	1 2k	70	85C	150m	150m	3 0			1 8	60			40u⊘	50 §	1.7k	130A	500m	S260c
47▼#	SKT70-12C	1 2k	70	85C	150m	150m	3.0			1 8	60			70u	200 §	1.7k	130A	500m	S260c
48▼#	SKT70-12CX	1 2k	70	85C	150m	150m	3 0			1.8	60			40u⊘	200 §	1.7k	130A	500m	S260c
49▼#	SKT70-12D	1 2k	70	85C	150m	150m	3 0			1 8	60			70u	500 §	1.7k	130A	500m	S260c
50▼#	SKT70-12DX	1.2k	70	85C	150m	150m	3 0			1 8	60			40u⊘	500 §	1 7k	130A	500m	S260c
51▼#	SKT70-12E	1 2k	70	85C	150m	150m	3.0			1.8	60			70u	1.0k§	1.7k	130A	500m	S260c
52#	10TC120	1.2k	70	125	100m	100m	3 0												
53▼#	10TCA120	1.2k	70	125	100	100m	3.0							100u	100 §	1.5k	125	10	
54	70C120	1 2k	70	125J	200m§	200m	3.0	10m	125J	1 8	220	10u	70	40u§		1.6k	125J	15 Ø	TO94#△
55	70C120C	1 2k	70	125J	200m§	100m	2 0	10m	125J	1 8	220	10u	70	40u§		1.6k	125J	15 Ø	TO94#△
56	70C120CF	1 2k	70	125J	200m§	100m	2.0	10m	125J	1.8	220	10u	70	40u§		1 6k	125J	15 Ø	TO83#△
57	70C120F	1.2k	70	125J	200m§	200m	3.0	10m	125J	1.8	220	10u	70	40u§		1 6k	125J	15 Ø	TO83#△
58▼#	12TC120	1 2k	80		100m	100m	3 0			1 5		10u		150u	50 §	1 5k*	125J		S183b
59#	2SF554	1 2k⊘	80	50B		100m	3.5	10m	125J	2.3	500					1.0k	125J	5.0	S189d
60#	CR31-1303A	1 2k	80	55C	38mØ	60m	3 0	10m†	125C	1.7	100	3.7u	100	130u	20	700	135J	5.0 Ø	TO49
61	36RA120	1 2k⊘	80 △	75C	500m	150m	2 5	9 0m	125C	2 2 †	160				200 §	1.0k△	125J	2.0 †	TO94
62	36RE120	1 2k⊘	80 △	75C	500m	150m	2 5	5.0m	125C	2.2 †	160				10 §	1.0k△	125J	2.0 †	TO94
63	37RA120	1.2k⊘	80 △	75C	500m	150m	2 5	9.0m	125C	2 2 †	160				200 §	1.0k△	125J	2.0 †	TO83
64	37RE120	1.2k⊘	80 △	75C	500m	150m	2 5	5.0m	125C	2.2 †	160				10 §	1.0k△	125J	2.0 †	TO83
65#	51RC120	1.2k	80 △	84B	50m	70m	2 5	1.0m		2.2	50	4 5u	50	60u	20	700	125A	5.0 Ø	S237c
66	36REH120	1.2k⊘	80 △	100C	500m	150m	2.5	15m	150C	2 1 †	160				10 §	900 △	150J	2 0 †	TO94
67	37REH120	1.2k⊘	80 △	100C	500m	150m	2.5	15m	150C	2.1 †	160				10 §	900 △	150J	2.0 †	TO83
68▼#	12TCA120	1 2k	80	125	100	100m	3 0							100u	100 §	1.5k	125	10	
69	250ZD	1 2k	80	125J		100m	3.0	10m	125J	1.3	50	4.0u	50	100u	300	1.6k*	125J	3.0 †	Z59
70#	CS42-12	1 2k	82	35	200m	110m	2 0	10m	115	1.9	180			180u	200	900	115	4.0	
71#	37TB12	1 2k	85	66B		15	3.0	15m		1.9	175					930	125	1.0	S63d
72#	CR70-1301A	1.2k	85	75C		100m	3.0	30m†	125C	1.7	210				20	1 0k	125	5 0	TO49
73#	CR70-1301C	1.2k	85	75C		100m	3 0	30m†	125C	1.7	210				20	1 0k	125	5 0	M376
74▼#	T70N1200	1.2k	85	85C	200m	150m	5.0m	25m	125J	2.8	400	4.5u	30	50u	50	2.0k§	125J		
75#	CS80-12	1.2k	90	75	50m	80m	3 0	15m	125	1.5	200			70	1.0k	1 2k	45	10	
76▼#	SKT90-12A	1.2k	90	85C	150m	150m	3 0			1.6	110			70u	50 §Ø	2.2k	130A	500m	S260c
77▼#	SKT90-12B	1 2k	90	85C	150m	150m	3 0			1.6	110			70u	50 §	2 2k	130A	500m	S260c
78▼#	SKT90-12C	1.2k	90	85C	150m	150m	3.0			1.6	110			70u	200 §	2 2k	130A	500m	S260c
79▼#	SKT90-12D	1 2k	90	85C	150m	150m	3 0			1.6	110			70u	500 §	2.2k	130A	500m	S260c
80#	TT12	1 2k	100	25A	50mØ	500m	3 0	25m	100J	2.2	350	5.0u§	100	100u§	50 §	2 0k		1.5	S204a
81#	38TB12	1 2k	100	62B		15	3 0	15m		1.8	205					1.0k	125	1.0	S63d
82	100C120	1.2k	100	125J	200m	200m	2 5	25m	125J	2.0	500	10u	100	40u§		2 0k	125J	10 Ø	TO93#△
83	100C120B	1 2k	100	125J	200m	200m	2.5	25m	125J	2.0	500	10u	100	40u§	100	2.0k	125J	10 Ø	TO93#△
84#	CR51-1303A	1 2k	105	55C	38mØ	60m	3.0	10m†	125C	1.6	150	3.4u	120	185u	20	760	135J	5.0	TO49
85	C151PB	1 2k	110	58C		150m	3 0							50u	200		125J		TO49
86	C153PB	1.2k	110	58C		150m	3.0							50u	200		125J		TO83
87	JAN2N3097	1 2k	110	60B	40m	70m	3.0			1 4	50		50	40u⊘	20 §	1.0k	125B	500m	TO94
88	JAN2N3105	1.2k	110	60B	40m	70m	3.0			1 4	50		50	40u⊘	20 §	1.0k	125B	500m	TO94
89	72RE120	1.2k§	110	60C	15 Ø	70m	2 0	2 5mØ	125J	1.8	220					1 0k△	125J	5.0 Ø	TO83
90	72RE120A	1 2k§#	110	60C	15mØ	70m	2.0	2 5mØ	125J	1 8	220					1.0k△	125J	5.0 Ø	TO83
91	71RB120	1.2k⊘	110 △	65C	500m	150m	2 5	8 5m	125J	2 5 †	220	2.0u	50	30u§	200 △	1.2k△	125J	2.0 †	TO94
92	71REB120	1 2k⊘	110 △	65C	500m	150m	2.5	5.0m	125J	2.5 †	220	2.0u	50	30u§	200 △	1.2k△	125J	2.0 †	TO94
93	72RB120	1 2k⊘	110 △	65C	500m	150m	2.5	8 5m	125J	2.5 †	220	2.0u	50	30u§	200 △	1.2k△	125J	2.0 †	TO83
94	72REB120	1.2k⊘	110 △	65C	500m	150m	2 5	5 0m	125J	2 5 †	220	2 0u	50	30u§	200 △	1.2k△	125J	2.0 †	TO83
95	C150PB△	1 2k	110 △	70C	500m	150m	3 0	13m	120C	2.6	500	8.0u	50	100u§	200	1 5k	125J	10	TO94
96	C152PB△	1 2k	110 △	70C	500m	150m	3.0	13m	120C	2.6	500	8.0u	50	100u§	200	1.5k	125J	10	S315
97#	71RC120	1.2k	110 △	79B	50m	70m	2 5	1.0m		1.9	70	4 5u	50	70u	20	1.0k	125A	5.0 Ø	S237c
98	71RA120	1 2k⊘	110 △	80C	500m	150m	2.5	8 5m	125J	1 9 †	220	2.0u	50	50u§	200 △	1.6k△	125J	2.0 †	TO94
99	71REA120	1 2k⊘	110 △	80C	500m	150m	2.5	5 0m	125J	1.9 †	220	2 0u	50	50u§	200 △	1.6k△	125J	2.0 †	TO94
100	72RA120	1 2k⊘	110 △	80C	500m	150m	2 5	8.5m	125J	1 9 †	220	2 0u	50	50u§	200 △	1.6k△	125J	2.0 †	TO83
101	72REA120	1.2k⊘	110 △	80C	500m	150m	2 5	5 0m	125J	1.9 †	220	2 0u	50	50u§	200 △	1.6k△	125J	2.0 †	TO83
102	C151P⊘	1.2k	110	80C	500m	150m	2 5	8 0m	125J	2.6 †	500	8 0u	50	30u§	200 §	1.4k	125J	2.0 †	TO49
103	C153P⊘	1.2k	110	80C	500m	150m	2 5	8.0m	125J	2.6 †	500	8.0u	50	30u§	200 §	1.4k	125J	2.0 †	TO83
104▼#	SKT110-12A	1.2k	110	85C	200m	200m	3 0			1.6	70			80u	50 §Ø	2.8k	130A	1.0	S260d
105▼#	SKT110-12B	1.2k	110	85C	200m	200m	3 0			1.6	70			80u	50 §	2.8k	130A	1.0	S260d
106▼#	SKT110-12BY	1.2k	110	85C	200m	200m	3 0			1 6	70			45u⊘	50 §	2.8k	130A	1 0	S260d
107▼#	SKT110-12C	1.2k	110	85C	200m	200m	3 0			1.6	70			80u	200 §	2.8k	130A	1 0	S260d
108▼#	SKT110-12CY	1.2k	110	85C	200m	200m	3 0			1.6	70			45u⊘	200 §	2.8k	130A	1.0	S260d
109▼#	SKT110-12D	1 2k	110	85C	200m	200m	3.0			1.6	70			80u	500 §	2.8k	130A	1.0	S260d
110▼#	SKT110-12DY	1.2k	110	85C	200m	200m	3 0			1.6	70			45u⊘	500 §	2 8k	130A	1.0	S260d

SYMBOLS AND CODES EXPLAINED IN INTERPRETER

6. SILICON CONTROLLED RECTIFIERS

IN ORDER OF (1) PEAK REV. VOLT., (2) MAX. CONT. CUR., (3) TEMPERATURE, (4) TYPE No.

LINE No	4 TYPE No.	1 PRV and VBO (V)	MAX. CONT. CURRENT 2 Idc (A)	3 at TEMP (°C)	MAX. HOLD. CUR Ih @ 25°C (A)	MAX. GATE FIRING SPEC at 25°C Igf (A)	Vgf (V)	MAX SAT I Ir@PRV and Is@VBO (A)	at TEMP (°C)	MAX. FWD. VOLT. DROP at 25°C Vf (V)	@ If (A)	SWITCHING TIME at 25°C Ton (s)	for If (A)	Toff (s)	MIN. dV/dt @ 25°C (V/us)	ABS. MAX. RATINGS 1Cy PK SURGE I@25°C (A)	MAX TEMP (°C)	MAX GATE POWER (W)	DWG. No.
1▼#	SKT110-12E	1.2k	110	85C	200m	200m	3 0			1 6	70			80u	1 0k§	2.8k	130A	1 0	S260d
2	C150P⊘	1 2k	110	89C	500m	150m	2.5	6.0m	125J	2.6 †	500	8 0u	50	100u§	200 §	1 8k	125J	2 0 †	TO49
3	C152P⊘	1.2k	110	89C	500m	150m	2 5	6.0m	125J	2.6 †	500	8 0u	50	100u§	200 §	1 8k	125J	2.0 †	TO83
4	NLF150P	1 2k	110	89C	500m	150m	2 5	6.0m	125J	2 6 †	500	8.0u	50	100u§	200 §	1 6k	125J	2.0 †	TO94
5	NLF152P	1 2k	110	89C	500m	150m	2.5	6 0m	125J	2.6 †	500	8 0u	50	100u§	200 §	1.6k	125J	2 0 †	TO83
6	71REJ120	1 2k⊘	110 △	90C	500m	150m	2 5	15m	150J	2 5 †	220	2 0u	50	50u§	50 △	1 0k△	150J	2 0 †	TO94
7	72REJ120	1 2k⊘	110 △	90C	500m	150m	2 5	15m	150J	2 5 †	220	2 0u	50	50u§	50 △	1 0k△	150J	2.0 †	TO83
8	NLC150PB	1.2k	110	90C	50	15	2 5	6.0m	125J	2 6	500	8 0u	50	100u	200	1.8k	125J	2 0 †	TO49
9	NLC152PB	1 2k	110	90C	50	15	2 5	6.0m	125J	2.6	500	8.0u	50	100u	200	1 8k	125J	2.0 †	TO83
10	NLC350PB	1 2k	110	90C	.50	15	2.5	4.0m	125J	2.6	500	8 0u	5 0	100u	200	1 8k	125J	2.0 †	M456
11	71REH120	1 2k⊘	110 △	105C	500m	150m	2 5	15m	150J	1 9 †	220	2 0u	50	60u§	50 △	1 4k△	150J	2.0 †	TO94
12	72REH120	1.2k⊘	110 △	105C	500m	150m	2 5	15m	150J	1 9 †	220	2 0u	50	60u§	50 △	1 4k△	150J	2.0 †	TO83
13#	CR100-1301C	1 2k	125	80C	30m⊘	100m	3 0	30m†	125C	1 7	300			100	20	1 5k	125	5 0	M376
14#	CR100-1301D	1.2k	125	80C	30m⊘	100m	3 0	30m†	125C	1.7	300			100	20	1 5k	125	5 0	TO49
15#	42TB12	1 2k	135	57B		20	3 0	15m		2 2	265					1 4k	125	1.5	M308
16♦#	30TC120	1.2k	140		150m	100m	3 0			1 5					50 §⊘	3 5k*	125J		S348
17▼#	SKT140-12A	1 2k	140	85C	200m	200m	3 0			1 6	200			80u	50 §⊘	3 9k	130A	1 0	S260d
18▼#	SKT140-12B	1 2k	140	85C	200m	200m	3.0			1 6	200			80u	50 §	3 9k	130A	1 0	S260d
19▼#	SKT140-12C	1 2k	140	85C	200m	200m	3 0			1.6	200			80u	200 §	3 9k	130A	1.0	S260d
20▼#	SKT140-12D	1 2k	140	85C	200m	200m	3 0			1 6	200			80u	500 §	3 9k	130A	1.0	S260d
21#	20TC120	1.2k	140	125	150m	100m	3 0												
22▼#	20TCA120	1 2k	140	125	150	100m	3 0							100u	100 §	3 0k	125	10	
23#	TT2120	1 2k	150	25A	50m⊘	500m	3 0	25m	125J	1.7	450	5 0u§	100	100u§	50 §	3 2k		1 5	S204a
24	150C120	1 2k	150	125J	200m	200m	2 5	25m	125J	1 7	500	10u	150	40u§		3 0k	125J	10 ⊘	TO93#△
25	150C120B	1 2k	150	125J	200m	200m	2 5	25m	125J	1 7	500	10u	150	40u§	100	3 0k	125J	10 ⊘	TO93#△
26	101RA120	1 2k⊘	160 △	80C	500m	150m	2 5	13m	125J	2 1 †	314	2.0u	150	35u§	200 △	2 0k△	125J	2 0 †	TO93
27	101RE120	1 2k⊘	160 △	80C	500m	150m	2 5	8.0m	125J	2.1 †	314	2.0u	150	35u§	4 0 △	2.0k△	125J	2.0 †	TO93
28#	101RC120	1 2k	160 △	91B	50m	10	3 5	2 0m		1.8	100	5 0u	50	80u	20	2 0k	125A	10 ⊘	S237d
29♦	115PA120	1 2k⊘	170 △	85C	500m	150m	2.5	15m	125C	2 3 †	340				200 §	1.6k△	125J	2.0 †	Y200b
30▼#	SKT170-12A	1 2k	170	85C	200m	250m	3 0			1.6	500			100u	50 §⊘	6 6k	130A	1 0	S355
31▼#	SKT170-12B	1.2k	170	85C	200m	250m	3 0			1 6	500			100u	50 §	6 6k	130A	1 0	S355
32▼#	SKT170-12BZ	1 2k	170	85C	200m	250m	3 0			1.6	500			50u⊘	50 §	6 6k	130A	1 0	S355
33▼#	SKT170-12C	1.2k	170	85C	200m	250m	3 0			1.6	500			100u	200 §	6 6k	130A	1.0	S355
34▼#	SKT170-12CZ	1.2k	170	85C	200m	250m	3 0			1.6	500			50u⊘	200 §	6 6k	130A	1.0	S355
35▼#	SKT170-12D	1 2k	170	85C	200m	250m	3 0			1 6	500			100u	500 §	6 6k	130A	1 0	S355
36▼#	SKT170-12DZ	1 2k	170	85C	200m	250m	3 0			1.6	500			50u⊘	500 §	6 6k	130A	1 0	S355
37▼#	SKT170-12E	1.2k	170	85C	200m	250m	3 0			1.6	500			100u	1 0k§	6.6k	130A	1 0	S355
38#	43TB12	1.2k	175	62B		20	3.0	15m		2.2	390					1 9k	125	1.5	M308
39▼#	2SF1149	1.2k	175	75C		300m	3 0	15m	125J	1.7 §	500				100 △	4 0k△	125J	16 ⊘	S237e
40#	CR150F24	1.2k	175	75C		300m	3 0	15m	125J	1 7 §	500				100 §	4 0k	125J	16 ⊘	S237e
41#	FT150B24	1.2k	175	75C		300m	3.0	15m	125J	1 7	500 §				100 △	4 0k△	125J	16 ⊘	M567
42	2N3895	1 2k	175	80	200m	400m	4 0	15m	125	1.8	175					4 5k	125	3 0	TO93
43	C350PB	1 2k	175	80C	500m	150m	3 0	6 0m	25	2 6	500	8.0u	50	100u	200	1 5k	120C	2 0	M514
44▼#	T161N1200	1.2k	180	85C	300m	200m	2 0	50m	125J	1 8	500	4.0u	100	50u	50	5 2k§	125J		M330d
45	C358PB	1.2k	180 △	125J	500m	150m	3 0	11m	125C	3.5	500	2.0u	50	30u⊘	200	1 2k	125J	2 0	M514
46#	CS130-12	1 2k	190	55	100m	150m	3 0	30m	125	1.7	400			60u	1.0k	3 5k	125	30	
47▼#	TY120SP12K2	1 2k	190	70B	40m	220m	3 5	23m	125J	1.7	300				200 §	2 7k	125J	3.0 †	S375a
48#	46TB12	1 2k	195	56B		20	3 0	15m		2 0	390					2 1k	125	1 5	M308
49#	2SF559	1 2k⊘	200	62B		125m	2 5	15m	125J	2 1	1 0k					3 5k	125J	10	S167
50	C178P	1 2k	200	64C	500m	300m	2 5	12m	125J	3 5 †	1 5k	8.0u	100	150u§	200 §	2.5k	125J	2 0 †	TO93
51	261ZD	1 2k	200	80		15	3 0	15m	125J	1 4	100				300	3 3k	125		TO93
52	263ZD	1 2k	200	85		15	3 0	15m	125J	1 3	50				300	1 6k	125		M414
53#	TT3120	1 2k	200	85C	40m⊘	500m	3.0	25m	125J	1 6	600	5 0u§		100u§	100 ⊘§	4 0k		1 5	S204a
54▼#	30TCA120	1.2k	200	125	150	100m	3.0								100 §	5 5k	125	10	
55#	CR153-1303A	1 2k	220	70C	35m⊘	150m	3 5	30m†	125C	1 6	450				100	3 0k	125	5 0 ⊘	M201
56▼#	SKT220-12A	1 2k	220	85C	200m	250m	3.0			1.6	800			100u	50 §⊘	7.8k	130A	1 0	S355
57▼#	SKT220-12B	1 2k	220	85C	200m	250m	3 0			1.6	800			100u	50 §	7 8k	130A	1 0	S355
58▼#	SKT220-12C	1 2k	220	85C	200m	250m	3 0			1 6	800			100u	200 §	7.8k	130A	1 0	S355
59▼#	SKT220-12D	1 2k	220	85C	200m	250m	3 0			1.6	800			100u	500 §	7 8k	130A	1 0	S355
60#	CR152-1303A	1 2k	230	70C	35m⊘	150m	3 5	30m†	125C	1 5	450				100	3.1k	125	5 0	M201
61#	CR150-1202B	1 2k	235	25	55m	150m	3 5					6.5u	150	20u		3.3k	125	5 0	M201
62	C181P	1 2k	235	65C	500m	300m	2 5	12m	125J	3 5 †	1 5k	8 0u	100	75u§	200 §	2.5k	125J	2 0 †	TO93
63	151RB120	1 2k⊘	235 △	75C	500m	150m	2 5	13m	125J	2 2 †	471	2.0u	150	40u§	200 △	2 5k△	125J	2 0 †	TO93
64	151REB120	1 2k⊘	235 △	75C	500m	150m	2 5	8 0m	125J	2.2 †	471	2 0u	150	40u§	200 △	2.5k△	125J	2 †	TO93
65#	151RC120	1 2k	235 △	78B	50m	10	2.5	2 0m		1.8	150	5.0u	50	80u	20	3.0k	125A	10 ⊘	S237c
66	C180P⊘	1 2k	235	80C	500m	150m	2 5	4 0m	125J	2 9 †	1.5k	8 0u	100	75u§	200 §	3.5k	125J	2 0 †	TO93
67	C180PB△	1 2k	235 △	80C	500m	150m	3 0	6 0m	25	2 9 †	1.5k	8 0u	100	125u	200	3 5k	125C	2 0	TO93
68	NLF180PB	1 2k	235	80C	500m	150m	2 5	12m	125J	2 9 †	1 5k	8 0u	100	125u§	200	3.5k	125J	2 0 †	TO93
69	151RA120	1 2k⊘	235 △	85C	500m	150m	2 5	13m	125J	1 8 †	471	2 0u	150	60u§	200 △	3.5k△	125J	2 0 †	TO93
70	151REA120	1 2k⊘	235 △	85C	500m	150m	2 5	8 0m	125J	1.8 †	471	2 0u	150	60u§	200 △	3.5k△	125J	2 †	TO93
71♦	C280PB	1 2k	235	85C	100m	150m	3 0			1.4	500	10u	5 0	250u§	100 §	3 5k	125J	3 0	S132
72▼	C281PB	1.2k	235	85C	100m	150m	3 0			1 4	500	10u	5.0	250u§	100 §	3 5k	125J	3 0	S247a
73#	CR151-1303A	1 2k	240	70C	35m⊘	150m	3 5	30m†	125C	1 4	450				100	3 3k	125	5 0	M201
74#	FT250B24	1 2k	250	55C		350m	4 0	15m	125J	1.8	780 §				100 △	5 0k△	125J	16 ⊘	M567
75#	2SF541	1 2k	250	65C		350m	4 0	15m⊘	125J	1 8	780				10 △	5 0k	125J	16 ⊘	S158b
76♦#	BTX41-1200R	1 2k	250	65B	150m	250m	2 5	10m	110J	1.5 §	600 §	20u	250	200u	20 §	5 5k*	110J	2 0 †	S237g
77#	CR250F24	1 2k	250	65C		350m	4 0	15m	125J	1 8 §	780				100 §	5 0k	125J	3 0 †	S158e
78	2N3364	1 2k	250	80C	200m§	400m§	4 0 §	15m	125C	2 0 §	250					5 0k§*	125C	3 0 †	TO108
79▼#	T221N1200	1 2k	260	85C	300m	200m	2 0	50m	125J	1 5	500	4 0u	100	60u	50	6 5k§	125J		M330d
80#	61TB12	1 2k	275	67B		30	3 0	40m		2 4	665					3 2	125	2 0	M308a
81	260ZD	1 2k	275	80		.15	3 0	15m	125J	1.2	100				300	5 0k	125		TO93
82♦	175PA120	1 2k⊘	275 △	85C	500m	150m	2 5	20m	125C	2 3 †	550				200 §	3 0k△	125J	2 0 †	Y200b
83#	CS220-12	1 2k	290	70	100m	150m	3 0	50m	125	1 6	600			60u	1 0k	5 2k	125	30	
84♦#	40TC120	1.2k	300		150m	100m	3 0			1.5					50 §⊘	4 5k*	125J		S348
85#	CR300AW24	1 2k	300	11A	30m⊘	350m	4 0	15m	125J	1 9 §	780			50 §	100 §	5 0k	125J	16 ⊘	S300
86▼#	2SF928	1 2k	300	15A		350m	4 0	15m	125J	1.8 §	780				100 △	5 0k△	125J	16 ⊘	S300
87#	CR300F24	1 2k	300	15A		350m	4 0	15m	125J	1.8 §	780				100 §	5 0k	125J	16 ⊘	S300
88	273ZD	1 2k	300	70		15	3 0	15m	125J	1 3	100				300	3.3k	125		M414
89♦#	FT300A24	1 2k	300	81C		200m	3 0	30m	125J	1.6	940 §				200 △	6 0k△	125J	16 ⊘	M567a
90#	CS300-12	1 2k	300	85	100m	150m	3 0	40m	125	1 5	900			100u	1 0k	7 0k	125	50	
91▼#	40TCA120	1 2k	300	125	150	100m	3.0								100 §	5 5k	125	10	
92	2248ZD	1 2k	300	125J		300m	4 0	10m	125J	1.0 §	100	5 0u	150	50u	100	5.0k*	125J	3.0 †	M308c
93▼#	TY290SP12K2	1 2k	305	70B	45m	220m	3 5	23m	125J	1 7	1 0k	10u⊘	500	30u⊘	200 §	7 2k	125J	3.0 †	S373
94▼#	TYA290SP12K2	1 2k	305	70B	45m	220m	3 5	23m	125J	1 6	600				200 §	6 4k	125J	3 0 †	S374
95#	62TB12	1 2k	315	65B		30	3 0	40m		2 2	665					3.7k	125	2.0	M308a
96#	CR253-1303A	1 2k	320	40C	35m⊘	150m	3 5	30m†	125C	1 6	450				100	3 5k	125	5.0 ⊘	M201
97#	CR252-1303A	1 2k	336	50C	35m⊘	150m	3 5	30m†	125C	1.5	450				100	3 6k	125	5.0	M201
98#	70TB12	1.2k	355	67B		30	3 0	40m		2.2	850					4 1	125	2 0	M308a
99▼#	T302N1200	1 2k	370	85C	300m	200m	2 0	50m	125J	1 4	500	4.0u	100	80u	50	7 2k§	125J		M330d
100	C380PB	1 2k	380	65C	500m	150m	3 0 §	6 0m	25C	2.8	1.5k	8.0u	100	100u	200	3 5k	120	2.0	M514
101♦	250PA120	1.2k⊘	390 △	70C	500m	150m	2 5	20m	125C	2.3 †	780				200 §	4 2k△	125J	2.0 †	Y200b
102	2N3541	1 2k	400	20	200m§	400m	4 0	15m	125J	1 9	250					5.0k	125J	16	M247
103▼	250RM120	1.2k⊘	400	60C	500m	150m	2 5	17m	125C	1 7 †	785		500	40u§	200 §	5 5k△	125J	2 0 †	TO118
104▼	251RM120	1 2k⊘	400	60C	500m	150m	2 5	17m	125J	1.7 †	785		500	40u§	200 §	5 5k△	125J	2 0 †	TO108
105#	71TB12	1 2k	400	65B		30	3 0	40m		2 0	850					4 6k	125	2 0	M308a
106#	2SF836	1.2k	400	68B		125m	3 0	25m	125J	1 6	1 0k					7.0k	125J	10	S280
107	250RA120	1 2k⊘	400 △	75C	100m	150m	3 0	17m	125J	1 7 †	785	5.0u	250	40u§	100 △⊘	5 0k△	125J	3 0 †	TO118
108#	FT500AW24	1.2k	400	75C		350m	4 0	30m	125J	2 2	1 2k§		400	50u⊘	200 △	7 0k△	125J	16 ⊘	M406
109#	FT500A24	1 2k	400	76C		350m	4 0	30m⊘	125J	2 2 †	1.2k§				200 △	7 0k△	125J	16 ⊘	M406
110▼#	2SF934	1 2k	400	77C		350m	4 0	30m	125J	2 2 §	1 2k				200 △	7 0k△	125J	16 ⊘	M406

SYMBOLS AND CODES EXPLAINED IN INTERPRETER

6. SILICON CONTROLLED RECTIFIERS

IN ORDER OF (1) PEAK REV. VOLT., (2) MAX. CONT. CUR., (3) TEMPERATURE, (4) TYPE No.

LINE No.	4 TYPE No.	1 PRV and VBO (V)	MAX. CONT. CURRENT 2 Idc (A)	3 at TEMP (°C)	MAX. HOLD. CUR Ih @ 25°C (A)	MAX. GATE FIRING SPEC at 25°C Igf (A)	Vgf (V)	MAX SAT I Ir@PRV and Is@VBO (A)	at TEMP (°C)	MAX. FWD. VOLT. DROP at 25°C Vf (V)	@ If (A)	SWITCHING TIME at 25°C Ton (s)	for If (A)	Toff (s)	MIN. dV/dt @ 25°C (V/us)	ABS. MAX. RATINGS 1Cy PK SURGE I@25°C (A)	MAX TEMP (°C)	MAX GATE POWER (W)	DWG. No.
1▼#	FT500BX24	1 2k	400	83C		350m	4 0	50m	125J	2.2 §	1.2k		400	30u☑	200 △	8.0k△	125J	16 ∅	M566
2▼#	FT500BY24	1 2k	400	83C		350m	4 0	50m	125J	2.2 §	1.2k		400	15u☑	200 △	8 0k△	125J	16 ∅	M566
3#	251RC120	1 2k	400 △	85B	40m	15	2 5	2 0m		1 5	250	6.0u	50	100u	4 0	4 8k	125A	10 ∅	S158d
4#	2SF566	1 2k	400	90B		125m	3.0	25m	125J	1.4	1 0k					7 0k	125	20	S280
5#	73TB12	1 2k	430	64B		30	3 0	40m		2 0	1 0k					5.1k	125	2 0	M308a
6#	CR7K1303A45	1.2k	435	65C	55m∅	150m	3 5	50m	125J	1 8	1 0k	3 5u	600	180u	100	6.0k	125J	5 0 ∅	M308b
7▼#	TY490SP12K2	1.2k	450	70B	31m	220m	3 5	23m	125J	1 6	1.0k				200 §	8.9k	125J	3 0 †	S373
8▼#	TYA490SP12K2	1.2k	450	70B	31m	220m	3 5	23m	125J	1 6	1 0k				200 §	8 9k	125J	3.0 †	S374
9▼#	YST302QP12K3	1 2k	450	70B	100m	220m	3.5	30m	125J	1.9	1.0k	4.0u☑	600	60u☑	200 §	7 4k	125J	3.0 †	S371a
10#	CR7K1303A4	1 2k	460	65C	55m∅	150m	3.5	50m	125J	1 7	100	3 5u	600	180u	100	6 4k	125J	5 0 ∅	M308b
11	276ZD	1 2k	470			15	3 0	15m	125J	1 2	100				300	5 5k	125		M247
12	304RA120	1 2k☑	470 △	5A	500m	150m	3 0	17m	125C	1.6 †	940					6.0k△	125J	3 0 †	TO109#
13#	74TB12	1 2k	470	63B		300m	3 0	40m		1 8	1 0k					5.6k	125	2 0	M308a
14♦	C290PB	1.2k	470	65C	100m	150m	3 5			1 2	500	10u	5.0	250u§	100 §	5 5k	125J	3.0	S132
15♦	C291PB△	1 2k	470	65C	100m	150m	3 5			1.2	500	10u	5.0	250u§	100 §	5.5k	125J	3.0	S247a
16	C291PB☑	1 2k	470	66C	100m	150m	3.0	15m	125J	1.2 †	500	5.0u	5 0	100u§	100 §	5.5k	125J	3 0 †	M331a
17	NLF291PB	1 2k	470	66C	100m	150m	2 5	15m	125J	1.2 †	500	5 0u	5 0	100u§	100	5.5k	125J	3 0 †	
18	272ZD	1.2k	470	71		15m	3 0	15m	125J	1.2	100				300	5.5k	125		M414
19	300RA120	1.2k☑	470 △	75C	100m	150m	3 0	17m	125J	1.4 †	945	5.0u	250	50u§	100 ∅§	5.5k△	125J	3 0 †	TO118
20	300RB120	1 2k☑	470 △	75C	100m	150m	3.0	17m	125J	1 6 †	945	5.0u	250	50u§	25 △	5.5k△	125J	3.0 †	TO118
21#	301RC120	1.2k	470 △	85B	40m	15	2 5	4 0m		1.4	300	6 0u	50	100u	4 0	5.5k	125A	10 ∅	S158d
22#	CR7K1303A35	1 2k	480	65C	140m	150m	3 5	50m	125J	1.6	1 0k	3.5u	600	180u	100	6 9k	125J	5.0 ∅	M308b
23#	FT500C24	1 2k	500	77C		350m	4 0	30m	125J	1.7 §	1 5k				200 §	10k	125J	16 ∅	M481
24#	CS500-12	1.2k	500	85	100m	500	3 5	40m	125	1.6	1 5k			200u	1.0k	10k	125	50	
25#	80TB12	1 2k	510	59B		30	3.0	40m		1.5	1.2k					6 4k	125	2.0	M308a
26#	CR7K1303A3	1.2k	520	55C	140m	150m	3.5			1.5	1 0k					7.0k	125J	5 0 ∅	M308b
27▼	NLC501PB	1.2k	550	25	250m	150m	6.5 §			1.5	1.0k			200u§	100 §	7.0k	125J	5.0 †	M593
28#	81TB12	1 2k	550	56B		30	3 0	40m		1 7	1.2k					7.0k	125	2 0	M308a
29	350RA120	1.2k	550	65C	100m	150m	3 0	17m	125J	1.4	550	5.0u	50	100u§	100 §∅	6 2k△	125J	3.0	S158a
30▼	C387PB	1 2k	550 △	65	500	150	3 0	45	125	4.2	3 0k	2.0		30	200	5 5k	125	40	
31▼	C388PB	1 2k	550 △	65	500	150	3 0	45	125	4.2	3.0k	2.0		20	200	5 5k	125	40	
32	270ZD	1 2k	550	67		15	3 0	15m	125J	1.2	500				300	6 5k	125		S295
33▼#	TYC300SP12K2	1 2k	550	70C	31m	220m	3.5	23m	125J	1.7	1 0k				200 §	7 4k	125J	3.0 †	S372
34▼#	TY500SP12K2	1.2k	590	70C	31m	220m	3.5	23m	125J	1 6	1.0k				200 §	10k	125J	3 0 †	S372
35	C507PB	1 2k	625 △	125J	100m	150m	4 0	50m	125C	1.4	500	5 0u	25	100u☑	100	6.5k	125J	26	M464
36	C508PB	1 2k	625 △	125J	100m	150m	4.0	50m	125C	1 3	500	5.0u	25	60u☑	100	9 0k	125J	26	M464
37#	V2060P	1 2k	628	65		150m	3.0	50m	125J	2 2					200	7 0k	125J	20	M559
38▼	420PM120	1.2k☑	660	60C	500m	150m	2 5	17m	125C	2.0 †	1.3k		500	40u§	200 §	5 5k△	125J	2.0 †	Y200c
39♦	420PA120T50	1.2k☑	660 △	68C	500m	150m	3 0	17m	125J	2 0 †	1.2k			50u☑	100 §	5.5k△	125J	16 ∅	Y200c
40#	2WDCR152-1203B																		
		1 2k	700 △	40B	60m∅	150m	3 5	30m	125J	2 1	775				100	3.1k	125J		
41▼	C397PB	1 2k	700 △	65	500	150	3 0	45	125	2 9	3.0k	2.0		45	200	7 5k	125	40	
42♦	C398PB	1 2k	700 △	65	500	150	3 0	45	125	2.9	3 0k	2 0		30	200	7 5k	125	40	
43♦	470PB120T52	1 2k☑	740 △	67C	500m	150m	3 0	17m	125J	1 9 †	1 4k			60u☑	100 §	6.0k△	125J	16 ∅	Y200c
44▼#	FT800C24	1 2k	800	63C		200m	3.0	30m	125J	1 6 §	2.5k				200 △	14k△	125J	16 ∅	M566
45♦	470PA120	1 2k☑	850	60C	500m	150m	3 0	17m	125C	1 7 †	1 7k		250	120u§	100 §	8.0k△	125J	3.0 †	Y200c
46▼#	YST801SP12K2	1.2k	1 0k	70C	100m	220m	3 5	23m	125J	1 6	1.8k				200 §	16k	125J	3.0 †	S371
47▼	C601PB	1.2k	1.1k△	72	500	150	6 5					4 0		300	100	10k	125	40	
48#	2WDCR7K1203B35																		
		1 2k	1.2k△	40B	80m∅	150m	3.5	50m	125J	2.0	1.3k				100	7.5k	125J		
49♦	40RCS120	1 2k☑	1.2k	87C	200m	110m	3.0	1 2m	105J	1.7 †	40	4.5u	10		25 §	1.0k§	105J	500m†	TO65
50#	5TC120	1 2k	1 2k	125	6 0	100m	3 0												
51▼	C600PB	1.2k	1.4k△	72	250	150	6 5			1 5	2.2k			250	100	13k	125	40	
52	C501PC	1 3k			250m	150m	6.5	15m	25J	1 5 †	1.0k†		450	200u§	100 §	7.0k	125J	5.0 †	M464
53#	2WDCR7K1403B4																		
		1 3k	1 2 △	40B	80m∅	150	3.5	50m†	125J	2.0	1.7k				100	7.5k	125	5 0 ∅	
54#	CR6-1403RB	1.3k	10	70C	28m∅	80m	3.0	5 0m†	100C	2.0	16	2 3u	20	80u	20	100	125	5 0	
55#	CR6-1403RBA	1 3k	10	70C	28m∅	80m	3 0	5 0m†	100C	2.0	16	2.3u	20	80u	200	100	125	5 0	
56#	BTX47/1400R	1.3k	11 5	85B	10m∅	65m	3.5	5.0m	125	4.0	50	5.0u	10	50u		155 *	125J	50 †	S17b
57#	CR12-1403RB	1 3k	14.5	75C	28m∅	60m	3 0	5.0m†	125C	2.0	32	2.3u	20	85u	20	160	125	5 0	
58#	CR12-1403RBA	1 3k	14 5	75C	28m∅	60m	3 0	5.0m†	125C	2.0	32	2.3u	20	85u	200	160	125	5 0	
59	202ZF	1 3k	16	58C		80m	3 5	4.0m	100J	1.6	10					125	100J		TO48
60#	BTX48/1400R	1.3k	16	85B	10m∅	65m	3 5	5 0m	125	2 7	50	5 0u	10	50u		200 *	125J	.50 †	S17b
61	203ZF	1.3k	16	92C		80m	3 7	4 0m	125J	1.6	10					125	125J		TO48
62#	T15N1300C	1.3k	19	85C	200m	100m	3.0	10m	125J	2 5	50	2.5u☑	10	80u§	20 §	300 §	125J		S63g%
63#	T15N1300E	1 3k	19	85C	200m	100m	3.0	10m	125J	2.5	50	2.5u☑	10	80u§	20 §	300 §	125J		M351%
64#	CR18-1403RB	1 3k	23	70C	28m∅	40m	3 0	5.0m†	125C	2.1	57	2.3u	20	85u	20	180	125	5.0	
65#	CR18-1403RBA	1.3k	23	70C	28m∅	40m	3 0	5.0m†	125C	2.1	57	2.3u	20	85u	200	180	125	5.0	
66#	CR181403RB	1.3k	23	75C	78m	40m	3.0	5.0m	125C	2.1	57				20 ∅§	180 *§	125J	5 0 ∅	S278
67#	SF16R11	1.3k	25	57C	50m	40m	3.0	8.0m	125J	1.9	50					135	125J	5.0 ∅	S341
68	201ZF	1 3k	25	75C		40m	3.0	4.0m	125J	2.3	50					250	125J		TO48
69#	CS22-13	1.3k	25	75	200m	100m	3.0	10m	125	2.1	70			80u	200	400	125	75	
70#	T22N1300C	1 3k	28	85C	200m	100m	3 0	10m	125J	1.9	60	2.5u☑	20	80u§	20 §	400 §	125J		S63g%
71#	T22N1300E	1.3k	28	85C	200m	100m	3.0	10m	125J	1.9	60	2.5u☑	20	80u§	20 §	400 §	125J		M353%
72#	CR30-1403A	1.3k	36	85C	33m∅	60m	3.0	10m†	125C	2.0	100	3.5u	30	28u	20	660	125	5.0 ∅	TO49
73#	BStF0590	1 3k	40	78C		100m	2.0	5.0m	120J					150u§	50 §	320	120J		S18f
74#	CR24-1403RB	1 3k	40	80C	28m∅	40m	3.0	5.0m†	125C	1.4	50	2.3u	20	85u	20	320	125	5.0	
75#	CR24-1403RBA	1 3k	40	80C	28m∅	40m	3 0	5.0m†	125C	1.4	50	2.3u	20	85u	200	320	125	5 0 ∅	
76	251ZF	1.3k	40	125J		100m	3.0	10m	125J	1.7	50	4.0u	50	100u	300	1.2k*	125J	3.0 †	Z59
77#	SF30R11	1.3k	47	73C	150m	100m	3.0	6.0m	125J	1.9	100					600	125J	5 0 ∅	S342
78	NL555PA	1 3k	55	89C	300m	150m	2.5	6.0m	125J	3.5 †	500	8.0u	50	100u§	200 §	1 2k	125J	2 0 †	TO49
79	NL556PA	1.3k	55	89C	300m	150m	2 5	6.0m	125J	3 5 †	500	8 0u	50	100u§	200 §	1.2k	125J	2.0 †	TO83
80	555PC	1 3k	55	99C		150m	3.0								200		125J		TO49
81	556PC	1.3k	55	99C		150m	3 0								200		125J		TO83
82#	BTX49-1400R	1 3k	60	85B	10m∅	80m	3 0	10m	125	3.5	50	5.0u	50	50u		1 0k*	125J	500m†	S140
83#	T50N1300	1 3k	62 5	85C	300m	100m	3.0	20m	125J	2.2	160	2.5u☑	25	80u§	20 §	800 §	125J		M330b%
84#	CR50-1403A	1.3k	66	75C	32m∅	60m	3 0	10m†	125C	1.7	150	4.2u	150	70u	20	760	125	5.0 ∅	TO49
85#	TK1130	1 3k	70	25A	50m∅	125m	3 0	10m	125J	2.0	200	5.0u§	100	100u§	50 §	1 0k		375m	S317
86	2N3098	1 3k	70 △	62C		200m$	3.0 $	2.5m	62C	1.9 †	70				20	1.0k§*	125C	.50 †	TO49
87	2N3106	1.3k	70 △	62C		200m$	3.0 $	2.5m	62C	1 9 †	70				20	1.0k*§	125C	.50 †	TO49
88#	SF50R11	1.3k	79	82C	150m	100m	3 0	8 0m	125J	1.7	150	6.0u	100		15 △	1.0k	125J	5.0 ∅	S340
89#	CR31-1403A	1 3k	80	55C	38m∅	60m	3.0	10m†	125C	1.7	100	3.7u	100	130u	20	700	135J	5.0 ∅	TO49
90	36RA130	1.3k☑	80 △	75C	500m	150m	2 5	8 0m	125C	2.2 †	160				200 §	1.0k△	125J	2.0 †	TO94
91	36RE130	1.3k☑	80 △	75C	500m	150m	2 5	5.0m	125C	2.2 †	160				10 §	1.0k△	125J	2.0 †	TO94
92	37RA130	1 3k☑	80 △	75C	500m	150m	2 5	8 0m	125C	2.2 †	160				200 §	1.0k△	125J	2.0 †	TO83
93	37RE130	1.3k☑	80 △	75C	500m	150m	2.5	5.0m	125C	2.2 †	160				10 §	1.0k△	125J	2.0 †	TO83
94	36REH130	1 3k☑	80 △	100C	500m	150m	2 5	15m	150C	2.1 †	160				10 §	900 △	150J	2.0 †	TO94
95	37REH130	1.3k☑	80 △	100C	500m	150m	2.5	15m	150C	2 1 †	160				10 §	900 △	150J	2.0 †	TO83
96	250ZF	1.3k	80	125J		100m	3.0	10m	125J	1.3	50	4 0u	50	100u	300	1 6k*	125J	3.0 †	Z59
97#	CR70-1401A	1.3k	85	75C		100m	3.0	30m†	125C	1 7	210				20	1.0k	125	5 0	TO49
98#	CR70-1401C	1 3k	85	75C		100m	3.0	30m†	125C	1.7	210				20	1.0k	125	5.0	M376
99#	CS80-13	1.3k	90	75	50m	80m	3 0	15m	125	1.5	200			70	1 0k	1.2k	45	10	
100#	TT13	1.3k	100	25A	50m∅	500m	3.0	25m	100J	2.2	350	5.0u§	100	100u§	50 §	2 0k		1 5	S204a
101#	CR51-1403A	1.3k	105	55C	38m∅	60m	3.0	10m†	125C	1.6	150	3.4u	120	185u	20	760	135J	5 0	TO49
102#	BStH0590	1.3k	110	52C	200m	200m	2 0	10m	120J					250u§	50 §	900	120J		S189e
103	C151PC	1.3k	110	58C		150m	3.0							50u	200		125J		TO49
104	C153PC	1.3k	110	58C		150m	3.0							50u	200		125J		TO83
105	JAN2N3098	1.3k	110	60B	40m	70m	3.0			1.4	50		50	40u☑	20 §	1 0k	125B	500m	TO94
106	JAN2N3106	1 3k	110	60B	40m	70m	3 0			1.4	50		50	40u☑	20 §	1 0k	125B	500m	TO94
107	72RE130	1.3k§	110	60C	15m∅	70m	2 0	2 5m∅	125J	1.8	220					1.0k△	125J	5.0 ∅	TO83

SYMBOLS AND CODES EXPLAINED IN INTERPRETER

6. SILICON CONTROLLED RECTIFIERS

IN ORDER OF (1) PEAK REV. VOLT., (2) MAX. CONT. CUR., (3) TEMPERATURE, (4) TYPE No.

LINE No.	4 TYPE No.	1 PRV and VBO (V)	MAX. CONT. CURRENT 2 Idc (A)	3 at TEMP (°C)	MAX. HOLD. CUR Ih @ 25°C (A)	MAX. GATE FIRING SPEC at 25°C Igf (A)	Vgf (V)	MAX SAT I Ir@PRV and Is@VBO (A)	at TEMP (°C)	MAX. FWD. VOLT. DROP at 25°C Vf (V)	@ If (A)	SWITCHING TIME at 25°C Ton (s)	for If (A)	Toff (s)	MIN. dV/dt @ 25°C (V/us)	ABS. MAX. RATINGS 1Cy PK SURGE I@25°C (A)	MAX TEMP (°C)	MAX GATE POWER (W)	DWG. No.
1	72RE130A	1.3k§#	110	60C	15mØ	70m	2.0	2.5mØ	125J	1.8	220					1.0kΔ	125J	5.0 Ø	TO83
2	71RB130	1.3k⊘	110 Δ	65C	500m	150m	2.5	8.0m	125J	2.5 †	220	2.0u	50	30u§	200 Δ	1.2kΔ	125J	2.0 †	TO94
3	71REB130	1.3k⊘	110 Δ	65C	500m	150m	2.5	5.0m	125J	2.5 †	220	2.0u	50	30u§	200 Δ	1.2kΔ	125J	2.0 †	TO94
4	72RB130	1.3k⊘	110 Δ	65C	500m	150m	2.5	8.0m	125J	2.5 †	220	2.0u	50	30u§	200 Δ	1.2kΔ	125J	2.0 †	TO83
5	72REB130	1.3k⊘	110 Δ	65C	500m	150m	2.5	5.0m	125J	2.5 †	220	2.0u	50	20u§	200 Δ	1.2kΔ	125J	2.0 †	TO83
6	C150PCΔ	1.3k	110 Δ	70C	500m	150m	3.0	11m	120C	2.6	500	8.0u	50	100u§	200	1.5k	125J	10	TO94
7	C152PCΔ	1.3k	110 Δ	70C	500m	150m	3.0	11m	120C	2.6	500	8.0u	50	100u§	200	1.5k	125J	10	S315
8	71RA130	1.3k⊘	110 Δ	80C	500m	150m	2.5	8.0m	125J	1.9 †	220	2.0u	50	50u§	200 Δ	1.6kΔ	125J	2.0 †	TO94
9	71REA130	1.3k⊘	110 Δ	80C	500m	150m	2.5	5.0m	125J	1.9 †	220	2.0u	50	50u§	200 Δ	1.6kΔ	125J	2.0 †	TO94
10	72RA130	1.3k⊘	110 Δ	80C	500m	150m	2.5	8.0m	125J	1.9 †	220	2.0u	50	50u§	200 Δ	1.6kΔ	125J	2.0 †	TO83
11	72REA130	1.3k⊘	110 Δ	80C	500m	150m	2.5	5.0m	125J	1.9 †	220	2.0u	50	50u§	200 Δ	1.6kΔ	125J	2.0 †	TO83
12	C151PA⊘	1.3k	110	80C	500m	150m	2.5	8.0m	125J	2.6 †	500	8.0u	50	30u§	200 §	1.4k	125J	2.0 †	TO49
13	C153PA⊘	1.3k	110	80C	500m	150m	2.5	8.0m	125J	2.6 †	500	8.0u	50	30u§	200 §	1.4k	125J	2.0 †	TO83
14	C150PA⊘	1.3k	110	89C	500m	150m	2.5	6.0m	125J	2.6 †	500	8.0u	50	100u§	200 §	1.8k	125J	2.0 †	TO49
15	C152PA⊘	1.3k	110	89C	500m	150m	2.5	6.0m	125J	2.6 †	500	8.0u	50	100u§	200 §	1.8k	125J	2.0 †	TO83
16	71REJ130	1.3k⊘	110 Δ	90C	500m	150m	2.5	15m	150J	2.5 †	220	2.0u	50	50u§	50 Δ	1.0kΔ	150J	2.0 †	TO94
17	72REJ130	1.3k⊘	110 Δ	90C	500m	150m	2.5	15m	150J	2.5 †	220	2.0u	50	50u§	50 Δ	1.0kΔ	150J	2.0 †	TO83
18	NLC150PC	1.3k	110	90C	.50	.15	2.5	6.0m	125J	2.6	500	8.0u	50	100u	200	1.8k	125J	2.0 †	TO49
19	NLC152PC	1.3k	110	90C	.50	.15	2.5	6.0m	125J	2.6	500	8.0u	50	100u	200	1.8k	125J	2.0 †	TO83
20	NLC350PC	1.3k	110	90C	.50	.15	2.5	4.0m	125J	2.6	500	8.0u	5.0	100u	200	1.8k	125J	2.0 †	M456
21	71REH130	1.3k⊘	110 Δ	105C	500m	150m	2.5	15m	150J	1.9 †	220	2.0u	50	60u§	50 Δ	1.4kΔ	150J	2.0 †	TO94
22	72REH130	1.3k⊘	110 Δ	105C	500m	150m	2.5	15m	150J	1.9 †	220	2.0u	50	60u§	50 Δ	1.4kΔ	150J	2.0 †	TO83
23#	CR100-1401C	1.3k	125	80C	30mØ	100m	3.0	30m†	125C	1.7	300			100	20	1.5k	125	5.0	M376
24#	CR100-1401D	1.3k	125	80C	30mØ	100m	3.0	30m†	125C	1.7	300			100	20	1.5k	125	5.0	TO49
25#	SF80R11	1.3k	126 Δ	85C	200m	150m	3.0	15m	125	1.7 §	250	6.0u	80		15	1.6k	125J	5.0	S267b
26#	42TB13	1.3k	135	57B		.20	3.0	15m		2.2	265					1.4k	125	1.5	M308
27#	TT2130	1.3k	150	25A	50mØ	500m	3.0	25m	125J	1.7	450	5.0u§	100	100u§	50 §	3.2k		1.5	S204a
28▼#	BStL2590	1.3k	150	55C	150m	300m	2.0	10m	120J	2.0	450				50 §	2.3k	125	20	
29	101RA130	1.3k⊘	160 Δ	80C	500m	150m	2.5	11m	125J	2.1 †	314	2.0u	150	35u§	200 Δ	2.0kΔ	125J	2.0 †	TO93
30	101RE130	1.3k⊘	160 Δ	80C	500m	150m	2.5	8.0m	125J	2.1 †	314	2.0u	150	35u§	4.0 Δ	2.0kΔ	125J	2.0 †	TO93
31♦	115PA130	1.3k⊘	170 Δ	85C	500m	150m	2.5	15m	125C	2.3 †	340				200 §	1.6kΔ	125J	2.0 †	Y200b
32	C350PC	1.3k	175	80C	500m	150m	3.0	5.0m	25	2.6	500	8.0u	50	100u	200	1.5k	120C	2.0	M514
33#	CS130-13	1.3k	190	55	100m	150m	3.0	30m	125	1.7	400			60u	1.0k	3.5k	125	30	
34	C178PA	1.3k	200	64C	500m	300m	2.5	12m	125J	3.5 †	1.5k	8.0u	100	150u§	200 §	2.5k	125J	2.0 †	TO93
35	261ZF	1.3k	200	80		15	3.0	15m	125J	1.4	100				300	3.3k	125		TO93
36	263ZF	1.3k	200	85		15	3.0	15m	125J	1.3	50				300	1.6k	125		M414
37#	TT3130	1.3k	200	85C	40mØ	500m	3.0	25m	125J	1.6	600	5.0u§		100u§	100 Ø§	4.0k		1.5	S204a
38#	CR153-1403A	1.3k	220	70C	35mØ	150m	3.5	30m†	125C	1.6	450				100	3.0k	125	5.0 Ø	M201
39#	58TB13	1.3k	225			30		40m		2.0	450					1.4k	125	2.0 †	M428
40#	CR152-1403A	1.3k	230	70C	35mØ	150m	3.5	30m†	125C	1.5	450				100	3.1k	125	5.0	M201
41	C181PA	1.3k	235	65C	500m	300m	2.5	12m	125J	3.5 †	1.5k	8.0u	100	125u§	200 §	2.5k	125J	2.0 †	TO93
42	151RB130	1.3k⊘	235 Δ	75C	500m	150m	2.5	11m	125J	2.2 †	471	2.0u	150	40u§	200 Δ	2.5kΔ	125J	2.0 †	TO93
43	151REB130	1.3k⊘	235 Δ	75C	500m	150m	2.5	8.0m	125J	2.2 †	471	2.0u	150	40u§	200 Δ	2.5kΔ	125J	2.0 †	TO93
44#	SF150R11	1.3k	235	76S	200m	150m	3.0	20m	125J	1.5	500					3.5k	125J	16	S91b
45	C180PA⊘	1.3k	235	80C	500m	150m	2.5	4.0m	125J	2.9 †	1.5k	8.0u	100	125u§	200 §	3.5k	125J	2.0 †	TO93
46	C180PCΔ	1.3k	235 Δ	80C	500m	150m	3.0	5.0m	25	2.9 †	1.5k	8.0u	100	125u	200	3.5k	125C	2.0	TO93
47	NLF180PC	1.3k	235	80C	500m	150m	2.5	12m	125J	2.9 †	1.5k	8.0u	100	125u§	200	3.5k	125J	2.0 †	TO93
48	151RA130	1.3k⊘	235 Δ	85C	500m	150m	2.5	11m	125J	1.8 †	471	2.0u	150	60u§	200 Δ	3.5kΔ	125J	2.0 †	TO93
49	151REA130	1.3k⊘	235 Δ	85C	500m	150m	2.5	8.0m	125J	1.8 †	471	2.0u	150	60u§	200 Δ	3.5kΔ	125J	2.0 †	TO93
50♦	C280PC	1.3k	235	85C	100m	150m	3.0			1.4	500	10u	5.0	250u§	100 §	3.5k	125J	3.0	S132
51♦	C281PC	1.3k	235	85C	100m	150m	3.0			1.4	500	10u	5.0	250u§	100 §	3.5k	125J	3.0	S247a
52#	61TB13	1.3k	275	67B		300m	3.0	40m		2.4	665					3.2	125	2.0	M308a
53	260ZF	1.3k	275	80		15	3.0	15m	125J	1.2	100				300	5.0k	125		TO93
54♦	175PA130	1.3k⊘	275 Δ	85C	500m	150m	2.5	20m	125C	2.3 †	550				200 §	3.0kΔ	125J	2.0 †	Y200b
55	273ZF	1.3k	300	70		15	3.0	15m	125J	1.3	100				300	3.3k	125		M414
56#	62TB13	1.3k	315	65B		.30	3.0	40m		2.2	665					3.7k	125	2.0	M308a
57#	CR253-1403A	1.3k	320	40C	35mØ	150m	3.5	30m†	125C	1.6	450				100	3.5k	125	5.0 Ø	M201
58#	CR252-1403A	1.3k	336	50C	35mØ	150m	3.5	30m†	125C	1.5	450				100	3.6k	125	5.0	M201
59▼#	BStN1590	1.3k	350	64C	150m	300m	2.0	15m	125J	1.9	1.0k				200 §	5.1k	125	20	
60#	70TB13	1.3k	355	67B		30	3.0	40m		2.2	850					4.1	125	2.0	M308a
61	C380PC	1.3k	380	65C	500m	150m	3.0 §	5.0m	25C	2.8	1.5k	8.0u	100	100u	200	3.5k	120	2.0	M514
62♦	250PA130	1.3k⊘	390 Δ	70C	500m	150m	2.5	20m	125C	2.3 †	780				200 §	4.2kΔ	125J	2.0 †	Y200b
63#	SH250R11	1.3k	395	55C	300m	300m	3.5	25m	115J	1.6	780	6.0u	500	60u	50 Δ	5.0k	115J	16 Ø	S337b
64#	71TB13	1.3k	400	65B		30	3.0	40m		2.0	850					4.6k	125	2.0	M308a
65#	FT500AW26	1.3k	400	75C		350m	4.0	30m	125J	2.2	1.2k§		400	50u⊘	200 Δ	7.0kΔ	125J	16 Ø	M406
66♦#	FT500BX26	1.3k	400	77C		350m	4.0	50m	115J	2.2 §	1.2k		400	30u⊘	200 Δ	8.0kΔ	115J	16 Ø	M566
67♦#	FT500BY26	1.3k	400	77C		350m	4.0	50m	115J	2.0 §	1.2k		400	15u⊘	200 Δ	8.0kΔ	115J	16 Ø	M566
68#	73TB13	1.3k	430	64B		.30	3.0	40m		2.0	1.0k					5.1k	125	2.0	M308a
69#	CR7K1403A45	1.3k	435	65C	55mØ	150m	3.5	50m	125J	1.8	1.0k	3.5u	600	180u	100	6.0k	125J	5.0	M308b
70#	BStN2590	1.3k	440	41C	180m	300m	2.0	10m	120J					250u§	50 §	5.1k	120J		S301
71#	CR7K1403A4	1.3k	460	65C	55mØ	150m	3.5	50m	125J	1.7	100	3.5u	600	180u	100	6.4k	125J	5.0 Ø	M308b
72	276ZF	1.3k	470			15	3.0	15m	125J	1.2	100				300	5.5k	125		M247
73#	74TB13	1.3k	470	63B		300m	3.0	40m		1.8	1.0k					5.6k	125	2.0	M308a
74#	SF300R11	1.3k	470	65C	300m	260m	3.5	20m	125J	1.6	1.0k	6.0u			15 §	5.0k	125J	3.0	S267a
75	272ZF	1.3k	470	71		15m	3.0	15m	125J	1.2	100				300	5.5k	125		M414
76#	CR7K1403A35	1.3k	480	65C	140m	150m	3.5	50m	125J	1.6	1.0k	3.5u	600	180u	100	6.9k	125J	5.0 Ø	M308b
77#	80TB13	1.3k	510	59B		30	3.0	40m		1.5	1.2k					6.4k	125	2.0	M308a
78#	CR7K1403A3	1.3k	520	55C	140m	150m	3.5			1.5	1.0k					7.0k*§	125J	5 Ø	M308b
79▼	NLC501PC	1.3k	550	25	250m	150m	6.5 §			1.5	1.0k			200u§	100 §	7.0k	125J	5.0 †	M593
80#	81TB13	1.3k	550	56B		30	3.0	40m		1.7	1.2k					7.0k	125	2.0	M308a
81	270ZF	1.3k	550	67		15	3.0	15m	125J	1.2	500				300	6.5k	125		S295
82	C507PC	1.3k	625 Δ	125J	100m	150m	4.0	50m	125C	1.4	500	5.0u	25	100u⊘	100	6.5k	125J	26	M464
83#	SH400R21	1.3k	630	115J		260m	3.5	35m	125J	1.9	1.2k	6.0u	400	50u	50	7.2k	115J	4.0 †	M433
84#	2WDCR152-1303B																		
		1.3k	700 Δ	40B	60mØ	150m	3.5	30m	125J	2.1	775				100	3.1k	125J		
85#	SF800R21	1.3k	800	125J		320m	4.0	35	125J	2.1	2.5k					13k	125J	20	M433
86▼	470PA130	1.3k⊘	850	60C	500m	150m	3.0	16m	125C	1.7 †	1.7k		250	120u§	100 §	8.0kΔ	125J	3.0 †	Y200c
87#	BStP0590	1.3k	1.0k	39C	300m	300m	2.0	20m	115J					250u§	50 §	10k	115J		M482
88▼	C601PC	1.3k	1.1kΔ	72	500	150	6.5					4.0		300	100	10k	125	40	
89#	2WDCR7K1303B35																		
		1.3k	1.2kΔ	40B	80mØ	150m	3.5	50m	125J	2.0	1.3k				100	7.5k	125J		
90	C501PD	1.4k			250m	150m	6.5	15m	25J	1.5 †	1.0k†		450	200u§	100 §	7.0k	125J	5.0 †	M464
91#	2WDCR7K1503B4																		
		1.4k	1.2 Δ	40B	80mØ	150	3.5	50m†	125J	2.0	1.7k				100	7.5k	125	5.0 Ø	
92	202ZH	1.4k	16	58C		80m	3.5	4.0m	100J	1.6	10					125	100J		TO48
93	NL511-6	1.4k	16	70C	20mØ	80m	3.0	2.0mØ	100J	2.5	30	3.0u	10	12u	20	150	100J	5.0	TO48
94	203ZH	1.4k	16	92C		80m	3.7	4.0m	125J	1.6	10					125	125J		TO48
95	201ZH	1.4k	25	75C		40m	3.0	4.0m	125J	2.3	50					250	125J		TO48
96#	TK14	1.4k	35	25A	50mØ	125m	3.0	10m	100J	2.0	100	5.0u§	100	100u§	50 §	700		375m	S317
97	251ZH	1.4k	40	125J		100m	3.0	10m	125J	1.7	50	4.0u	50	100u	300	1.2k*	125J	3.0 †	Z59
98▼#	SKT45-14A	1.4k	45	85C	130m	100m	3.0			1.8	50			50u	50 §Ø	800	130A	300m	S354
99▼#	SKT45-14B	1.4k	45	85C	130m	100m	3.0			1.8	50			50u	50 §	800	130A	300m	S354
100▼#	SKT45-14BX	1.4k	45	85C	130m	100m	3.0			1.8	50			40u⊘	50 §	800	130A	300m	S354
101▼#	SKT45-14C	1.4k	45	85C	130m	100m	3.0			1.8	50			50u	200 §	800	130A	300m	S354
102▼#	SKT45-14CX	1.4k	45	85C	130m	100m	3.0			1.8	50			40u⊘	200 §	800	130A	300m	S354
103▼#	SKT45-14D	1.4k	45	85C	130m	100m	3.0			1.8	50			50u	500 §	800	130A	300m	S354
104▼#	SKT45-14DX	1.4k	45	85C	130m	100m	3.0			1.8	50			40u⊘	500 §	800	130A	300m	S354
105▼#	SKT45-14E	1.4k	45	85C	130m	100m	3.0			1.8	50			50u	1.0k§	800	130A	300m	S354
106▼#	T130N1400	1.4k	45	85C	200m	150m	1.4	30m	125J	1.8	500	7.5u	100	60u	50	3.5k§	125J		M330d
107	NL555PB	1.4k	55	89C	300m	150m	2.5	6.0m	125J	3.5 †	500	8.0u	50	100u§	200 §	1.2k	125J	2.0 †	TO49

SYMBOLS AND CODES EXPLAINED IN INTERPRETER

6. SILICON CONTROLLED RECTIFIERS

IN ORDER OF (1) PEAK REV. VOLT., (2) MAX. CONT. CUR., (3) TEMPERATURE, (4) TYPE No.

LINE No	4 TYPE No.	1 PRV and VBO (V)	MAX. CONT. CURRENT 2 Idc (A)	3 at TEMP (°C)	MAX HOLD. CUR Ih @ 25°C (A)	MAX. GATE FIRING SPEC at 25°C Igf (A)	Vgf (V)	MAX SAT I Ir@PRV and Is@VBO (A)	at TEMP (°C)	MAX. FWD. VOLT. DROP at 25°C Vf (V)	@ If (A)	SWITCHING TIME at 25°C Ton (s)	for If (A)	Toff (s)	MIN. dV/dt @ 25°C (V/us)	ABS. MAX. RATINGS 1Cy PK SURGE I@25°C (A)	MAX TEMP (°C)	MAX GATE POWER (W)	DWG. No.
1	NL556PB	1 4k	55	89C	300m	150m	2 5	6 0m	125J	3 5 †	500	8.0u	50	100u§	200 §	1.2k	125J	2.0 †	TO83
2#	TK1140	1 4k	70	25A	50m∅	125m	3 0	10m	125J	2.0	200	5.0u§	100	100u§	50 §	1.0k		375m	S317
3	2N4368	1 4k	70	82C	200m	250m$	5.0 $	10m	125C	2 0 †	70				100	1 6k*§	125C	15 ∅	TO94
4	2N4378	1 4k	70	82C	200m	250m$	5 0 $	10m	125C	2 0 †	70				100	1 6k*§	125C	15 ∅	TO83
5▼#	SKT70-14A	1 4k	70	85C	150m	150m	3.0			1.8	60			70u	50 §∅	1.7k	130A	500m	S260c
6▼#	SKT70-14B	1.4k	70	85C	150m	150m	3.0			1 8	60			70u	50 §	1.7k	130A	500m	S260c
7▼#	SKT70-14BX	1 4k	70	85C	150m	150m	3 0			1 8	60			40u∅	50 §	1.7k	130A	500m	S260c
8▼#	SKT70-14C	1 4k	70	85C	150m	150m	3 0			1 8	60			70u	200 §	1.7k	130A	500m	S260c
9▼#	SKT70-14CX	1.4k	70	85C	150m	150m	3 0			1.8	60			40u∅	200 §	1.7k	130A	500m	S260c
10▼#	SKT70-14D	1.4k	70	85C	150m	150m	3 0			1 8	60			70u	500 §	1.7k	130A	500m	S260c
11▼#	SKT70-14DX	1 4k	70	85C	150m	150m	3.0			1 8	60			40u∅	500 §	1.7k	130A	500m	S260c
12▼#	SKT70-14E	1 4k	70	85C	150m	150m	3.0			1 8	60			70u	1.0k§	1.7k	130A	500m	S260c
13	250ZH	1 4k	80	125J		100m	3.0	10m	125J	1.3	50	4 0u	50	100u	300	1.6k*	125J	3.0 †	Z59
14#	CS42-14	1 4k	82	35	200m	110m	2 0	10m	115	1 9	180			180u	200	900	115	4.0	
15▼#	T70N1400	1 4k	85	85C	200m	150m	5 0m	25m	125J	2 8	400	4.5u	30	50u	50	2.0k§	125J		
16#	CS80-14	1 4k	90	75	50m	80m	3 0	15m	125	1 5	200			70	1 0k	1.2k	45	10	
17▼#	SKT90-14A	1 4k	90	85C	150m	150m	3.0			1.6	110			70u	50 §∅	2.2k	130A	500m	S260c
18▼#	SKT90-14B	1 4k	90	85C	150m	150m	3 0			1 6	110			70u	50 §	2.2k	130A	500m	S260c
19▼#	SKT90-14C	1 4k	90	85C	150m	150m	3.0			1.6	110			70u	200 §	2.2k	130A	500m	S260c
20▼#	SKT90-14D	1 4k	90	85C	150m	150m	3.0			1.6	110			70u	500 §	2.2k	130A	500m	S260c
21#	TT14	1 4k	100	25A	50m∅	500m	3 0	25m	100J	2.2	350	5.0u§	100	100u§	50 §	2.0k		1 5	S204a
22▼#	SKT110-14A	1 4k	110	85C	200m	200m	3.0			1.6	70			80u	50 §∅	2.8k	130A	1.0	S260d
23▼#	SKT110-14B	1.4k	110	85C	200m	200m	3.0			1.6	70			80u	50 §	2.8k	130A	1.0	S260d
24▼#	SKT110-14BY	1 4k	110	85C	200m	200m	3.0			1 6	70			45u∅	50 §	2.8k	130A	1.0	S260d
25▼#	SKT110-14C	1 4k	110	85C	200m	200m	3 0			1.6	70			80u	200 §	2.8k	130A	1 0	S260d
26▼#	SKT110-14CY	1 4k	110	85C	200m	200m	3 0			1 6	70			45u∅	200 §	2.8k	130A	1.0	S260d
27▼#	SKT110-14D	1 4k	110	85C	200m	200m	3 0			1.6	70			80u	500	2.8k	130A	1.0	S260d
28▼#	SKT110-14DY	1 4k	110	85C	200m	200m	3 0			1 6	70			45u∅	500 §	2.8k	130A	1.0	S260d
29▼#	SKT110-14E	1 4k	110	85C	200m	200m	3 0			1.6	70			80u	1 0k§	2 8k	130A	1 0	S260d
30	C150PB∅	1 4k	110	89C	500m	150m	2 5	6 0m	125J	2 6 †	500	8.0u	50	100u§	200 §	1.8k	125J	2.0 †	TO49
31	C152PB∅	1.4k	110	89C	500m	150m	2 5	6 0m	125J	2.6 †	500	8 0u	50	100u§	200 §	1.8k	125J	2.0 †	TO83
32#	42TB14	1.4k	135	57B		20	3 0	15m		2.2	265					1 4k	125	1.5	M308
33▼#	SKT140-14A	1 4k	140	85C	200m	200m	3.0			1.6	200			80u	50 §∅	3.9k	130A	1.0	S260d
34▼#	SKT140-14B	1.4k	140	85C	200m	200m	3.0			1.6	200			80u	50 §	3.9k	130A	1.0	S260d
35▼#	SKT140-14C	1.4k	140	85C	200m	200m	3 0			1 6	200			80u	200 §	3.9k	130A	1.0	S260d
36▼#	SKT140-14D	1 4k	140	85C	200m	200m	3 0			1.6	200			80u	500 §	3.9k	130A	1.0	S260d
37#	TT2140	1 4k	150	25A	50m∅	500m	3 0	25m	125J	1.7	450	5 0u§	100	100u§	50 §	3.2k		1 5	S204a
38▼#	SKT170-14A	1 4k	170	85C	200m	250m	3 0			1 6	500			100u	50 §∅	6 6k	130A	1 0	S355
39▼#	SKT170-14B	1.4k	170	85C	200m	250m	3.0			1.6	500			100u	50 §	6.6k	130A	1.0	S355
40▼#	SKT170-14BZ	1.4k	170	85C	200m	250m	3 0			1.6	500			50u∅	50 §	6 6k	130A	1.0	S355
41▼#	SKT170-14C	1 4k	170	85C	200m	250m	3.0			1.6	500			100u	200 §	6.6k	130A	1 0	S355
42▼#	SKT170-14CZ	1 4k	170	85C	200m	250m	3 0			1.6	500			50u∅	200 §	6.6k	130A	1.0	S355
43▼#	SKT170-14D	1 4k	170	85C	200m	250m	3 0			1.6	500			100u	500 §	6.6k	130A	1.0	S355
44▼#	SKT170-14DZ	1 4k	170	85C	200m	250m	3 0			1.6	500			50u∅	500 §	6.6k	130A	1 0	S355
45▼#	SKT170-14E	1.4k	170	85C	200m	250m	3.0			1.6	500			100u	1 0k§	6.6k	130A	1.0	S355
46▼#	2SF1150	1 4k	175	75C		300m	3 0	15m	125J	1.7 §	500				100 △	4.0k△	125J	16 ∅	S237e
47#	CR150F28	1.4k	175	75C		300m	3.0	15m	125J	1.7 §	500				100 §	4.0k	125J	16 ∅	S237e
48#	FT150B28	1 4k	175	75C		300m	3.0	15m	125J	1.7	500 §				100 △	4.0k△	125J	16 ∅	M567
49▼#	T161N1400	1 4k	180	85C	300m	200m	2 0	50m	125J	1.8	500	4.0u	100	50u	50	5.2k§	125J		M330d
50#	CS130-14	1.4k	190	55	100m	150m	3.0	30m	125	1.7	400			60u	1 0k	3 5k	125	30	
51▼#	TY120SP14K2	1 4k	190	70B	40m	220m	3.5	21m	125J	1.7	300				200 §	2.7k	125J	3.0 †	S375a
52	C178PB	1.4k	200	64C	500m	300m	2 5	12m	125J	3.5 †	1.5k	8.0u	100	150u§	200 §	2.5k	125J	2.0 †	TO93
53	261ZH	1 4k	200	80		15	3 0	15m	125J	1.4	100				300	3.3k	125		TO93
54	263ZH	1 4k	200	85		15	3 0	15m	125J	1.3	50				300	1.6k	125		M414
55#	TT3140	1 4k	200	85C	40m∅	500m	3 0	25m	125J	1.6	600	5.0u§		100u§	100 ∅§	4.0k		1.5	S204a
56#	CR153-1503A	1.4k	220	70C	35m∅	150m	3 5	30m†	125C	1.6	450				100	3.0k	125	5 0 ∅	M201
57▼#	SKT220-14A	1 4k	220	85C	200m	250m	3 0			1.6	800			100u	50 §∅	7.8k	130A	1 0	S355
58▼#	SKT220-14B	1.4k	220	85C	200m	250m	3 0			1.6	800			100u	50 §	7.8k	130A	1 0	S355
59▼#	SKT220-14C	1 4k	220	85C	200m	250m	3 0			1.6	800			100u	200 §	7 8k	130A	1.0	S355
60▼#	SKT220-14D	1.4k	220	85C	200m	250m	3.0			1 6	800			100u	500 §	7.8k	130A	1.0	S355
61#	58TB14	1 4k	225			30		40m		2.0	450					1.4k	125	2.0 †	M428
62	C181PB	1.4k	235	65C	500m	300m	2 5	12m	125J	3.5 †	1 5k	8.0u	100	125u§	200 §	2.5k	125J	2 0 †	TO93
63	C180PB∅	1 4k	235	80C	500m	150m	2.5	4.0m	125J	2.9 †	1.5k	8.0u	100	125u§	200 §	3.5k	125J	2 0 †	TO93
64♦	C280PD	1 4k	235	85C	100m	150m	3 0			1.4	500	10u	5 0	250u§	100 §	3.5k	125J	3.0	S132
65♦	C281PD	1 4k	235	85C	100m	150m	3 0			1 4	500	10u	5.0	250u§	100 §	3 5k	125J	3 0	S247a
66#	FT250B28	1 4k	250	55C		350m	4 0	15m	125J	1.8	780 §				100 △	5.0k△	125J	16 ∅	M567
67#	2SF542	1.4k	250	65C		350m	4 0	15m∅	125J	1 8	780				10 △	5.0k	125J	16 ∅	S158b
68♦#	BTX41-1400R	1.4k	250	65B	150m	250m	2 5	10m	110J	1.6 §	600 §	20u	250	200u	20 §	5.5k*	110J	2.0 †	S237g
69#	CR250F28	1.4k	250	65C		350m	4 0	15m	125J	1.8 §	780				100 §	5.0k	125J	3 0 †	S158e
70▼#	T221N1400	1.4k	260	85C	300m	200m	2 0	50m	125J	1.5	500	4.0u	100	60u	50	6.5k§	125J		M330d
71#	61TB14	1 4k	275	67B		.30	3 0	40m		2 4	665					3 2	125	2.0	M308a
72	260ZH	1.4k	275	80		.15	3 0	15m	125J	1.2	100				300	5 0k	125		TO93
73#	CS220-14	1 4k	290	70	100m	150m	3.0	50m	125	1.6	600			60u	1.0k	5 2k	125	30	
74▼#	2SF929	1 4k	300	15A		350m	4.0	15m	125J	1.8 §	780				100 △	5.0k△	125J	16 ∅	S300
75#	CR300F28	1.4k	300	15A		350m	4 0	15m	125J	1.8 §	780				100 §	5.0k	125J	16 ∅	S300
76#	FT300A28	1 4k	300	66C		200m	3.0	30m	125J	1.9	940 §				350 △	5.0k△	125J	16 ∅	M567a
77	273ZH	1 4k	300	70		15	3 0	15m	125J	1.3	100				300	3.3k	125		M414
78#	CS300-14	1.4k	300	85	100m	150m	3.0	40m	125	1.5	900			100u	1.0k	7 0k	125	50	
79▼#	TY290SP14K2	1.4k	305	70B	45m	220m	3.5	21m	125J	1 7	1.0k	10u∅	500	30u∅	200 §	7 2k	125J	3.0 †	S373
80▼#	TYA290SP14K2	1 4k	305	70B	45m	220m	3.5	21m	125J	1.6	600				200 §	6 4k	125J	3.0 †	S374
81#	62TB14	1.4k	315	65B		.30	3 0	40m		2 2	665					3.7k	125	2.0	M308a
82#	CR253-1503A	1 4k	320	40C	35m∅	150m	3.5	30m†	125C	1.6	450				100	3.5k	125	5 0 ∅	M201
83#	70TB14	1 4k	355	67B		30	3.0	40m		2 2	850					4 1	125	2.0	M308a
84▼#	T302N1400	1 4k	370	85C	300m	200m	2.0	50m	125J	1.4	500	4 0u	100	80u	50	7.2k§	125J		M330d
85#	71TB14	1 4k	400	65B		30	3 0	40m		2.0	850					4.6k	125	2.0	M308a
86#	FT500A28	1.4k	400	76C		350m	4 0	30m∅	125J	2.2 †	1.2k§				200 △	7.0k△	125J	16 ∅	M406
87▼#	2SF935	1.4k	400	77C		350m	4.0	30m	125J	2.2 §	1.2k				200 △	7.0k△	125J	16 ∅	M406
88#	73TB14	1 4k	430	64B		300m	3.0	40m		2 0	1.0k					5.1k	125	2.0	M308a
89#	CR7K1503A45	1 4k	435	65C	55m∅	150m	3 5	50m	125J	1 8	1.0k	3 5u	600	180u	100	6.0k	125J	5.0 ∅	M308b
90▼#	TY490SP14K2	1.4k	450	70B	31m	220m	3 5	21m	125J	1 6	1.0k				200 §	8.9k	125J	3.0 †	S373
91▼#	TYA490SP14K2	1 4k	450	70B	31m	220m	3.5	21m	125J	1 6	1 0k				200 §	8.9k	125J	3 0 †	S374
92▼#	YST302QP14K3	1 4k	450	70B	100m	220m	3.5	30m	125J	1 9	1 0k	4.0u∅	600	60u∅	200 §	7.4k	125J	3.0 †	S371a
93#	CR7K1503A4	1.4k	460	65C	55m∅	150m	3 5	50m	125J	1.7	100	3 5u	600	180u	100	6.4k	125J	5.0 ∅	M308b
94	276ZH	1.4k	470			.15	3 0	15m	125J	1.2	100				300	5.5k	125		M247
95#	74TB14	1.4k	470	63B		300m	3.0	40m		1.8	1 0k					5.6k	125	2 0	M308a
96	272ZH	1 4k	470	71		.15m	3 0	15m	125J	1.2	100				300	5.5k	125		M414
97#	CR7K1503A35	1.4k	480	65C	140m	150m	3 5	50m	125J	1.6	1.0k	3 5u	600	180u	100	6.9k	125J	5.0 ∅	M308b
98#	FT500C28	1.4k	500	77C		350m	4 0	30m	125J	1.7 §	1 5k				200 §	10k	125J	16 ∅	M481
99#	CS500-14	1 4k	500	85	100m	500	3 5	40m	125	1 6	1 5k			200u	1 0k	10k	125	50	
100#	80TB14	1 4k	510	59B		.30	3 0	40m		1.5	1 2k					6.4k	125	2.0	M308a
101▼	NLC501PD	1 4k	550	25	250m	150m	6 5 §			1 5	1 0k			200u§	100 §	7.0k	125J	5 0 †	M593
102#	81TB14	1 4k	550	56B		.30	3 0	40m		1 7	1 2k					7.0k	125	2 0	M308a
103	270ZH	1.4k	550	67		15	3 0	15m	125J	1.2	500				300	6.5k	125		S295
104▼#	TYC300SP14K2	1.4k	550	70C	31m	220m	3 5	21m	125J	1.7	1.0k				200 §	7.4k	125J	3.0 †	S372
105▼#	TY500SP14K2	1 4k	590	70C	31m	220m	3.5	21m	125J	1.6	1.0k				200 §	10k	125J	3 0 †	S372
106	C507PD	1 4k	625 △	125J	100m	150m	4 0	50m	125C	1 4	500	5.0u	25	100u∅	100	6.5k	125J	26	M464
107▼	470PA140	1.4k∅	850	60C	500m	150m	3 0	15m	125C	1.7 †	1 7k		250	120u§	100 §	8.0k△	125J	3.0 †	Y200c
108▼#	YST801SP14K2	1 4k	1.0k	70C	100m	220m	3 5	21m	125J	1.6	1 8k				200 §	16k	125J	3.0 †	S371
109▼	C601PD	1 4k	1 1k△	72	500	150	6.5					4.0		300	100	10k	125	40	
110	C501PE	1.5k			250m	150m	6 5	15m	25J	1.5 †	1.0k†		450	200u§	100 §	7.0k	125J	5.0 †	M464

SYMBOLS AND CODES EXPLAINED IN INTERPRETER

6. SILICON CONTROLLED RECTIFIERS

IN ORDER OF (1) PEAK REV. VOLT., (2) MAX. CONT. CUR., (3) TEMPERATURE, (4) TYPE No.

LINE No.	4 TYPE No.	1 PRV and VBO (V)	MAX. CONT. CURRENT 2 Idc (A)	3 at TEMP (°C)	MAX. HOLD. CUR Ih @ 25°C (A)	MAX. GATE FIRING SPEC at 25°C Igf (A)	Vgf (V)	MAX SAT I Ir@PRV and Is@VBO (A)	at TEMP (°C)	MAX. FWD. VOLT DROP at 25°C Vf (V)	@ If (A)	SWITCHING TIME at 25°C Ton (s)	for If (A)	Toff (s)	MIN. dV/dt @ 25°C (V/us)	ABS. MAX. RATINGS 1Cy PK SURGE I@25°C (A)	MAX TEMP (°C)	MAX GATE POWER (W)	DWG. No.
1	202ZK	1.5k	16	58C		80m	3.5	4 0m	100J	1.6	10					125	100J		TO48
2	203ZK	1 5k	16	92C		80m	3 7	4.0m	125J	1 6	10					125	125J		TO48
3	201ZK	1.5k	25	75C		40m	3.0	4.0m	125J	2.3	50					250	125J		TO48
4#	TK15	1.5k	35	25A	50mØ	125m	3 0	10m	100J	2 0	100	5 0u§	100	100u§	50 §	700		375m	S317
5	251ZK	1.5k	40	125J		100m	3 0	10m	125J	1 7	50	4.0u	50	100u	300	1 2k*	125J	3 0 †	Z59
6	NL555PC	1.5k	55	89C	300m	150m	2 5	6.0m	125J	3.5 †	500	8.0u	50	100u§	200 §	1.2k	125J	2 0 †	TO49
7	NL556PC	1.5k	55	89C	300m	150m	2 5	6.0m	125J	3.5 †	500	8 0u	50	100u§	200 §	1 2k	125J	2 0 †	TO83
8#	TK1150	1.5k	70	25A	50mØ	125m	3 0	10m	125J	2.0	200	5.0u§	100	100u§	50 §	1 0k		375m	S317
9#	CR100CX30	1.5k	70	82C		100m	3 0	15m	110J	2 5	200		70	30u☑	100 △	1 5k△	110J	16 Ø	S237e
10	250ZK	1.5k	80	125J		100m	3 0	10m	125J	1.3	50	4 0u	50	100u	300	1.6k*	125J	3 0 †	Z59
11#	CS80-15	1 5k	90	75	50m	80m	3 0	15m	125	1 5	200			70	1 0k	1 2k	45	10	
12#	TT15	1.5k	100	25A	50mØ	500m	3 0	25m	100J	2.2	350	5 0u§	100	100u§	50 §	2 0k		1.5	S204a
13	C150PC☑	1 5k	110	89C	500m	150m	2 5	6.0m	125J	2 6 †	500	8 0u	50	100u§	200 §	1.8k	125J	2 0 †	TO49
14	C152PC☑	1.5k	110	89C	500m	150m	2 5	6 0m	125J	2.6 †	500	8 0u	50	100u§	200 §	1 8k	125J	2 0 †	TO83
15#	42TB15	1 5k	135	57B		20	3.0	15m		2 2	265					1.4k	125	1 5	M308
16#	TT2150	1 5k	150	25A	50mØ	500m	3 0	25m	125J	1.7	450	5 0u§	100	100u§	50 §	3 2k		1.5	S204a
17#	CS130-15	1 5k	190	55	100m	150m	3 0	30m	125	1.7	400			60u	1.0k	3.5k	125	30	
18	261ZK	1 5k	200	80		15	3 0	15m	125J	1 4					300	3.3k	125		TO93
19	263ZK	1.5k	200	85		15	3 0	15m	125J	1 3	50				300	1 6k	125		M414
20#	TT3150	1.5k	200	85C	40mØ	500m	3 0	25m	125J	1 6	600	5.0u§		100u§	100 Ø§	4 0k		1 5	S204a
21#	58TB15	1.5k	225			30		40m		2.0	450					1 4k	125	2 0 †	M428
22	C180PC☑	1 5k	235	80C	500m	150m	2 5	4 0m	125J	2 9 †	1 5k	8 0u	100	125u§	200 §	3.5k	125J	2 0 †	TO93
23♦	C280PE	1.5k	235	85C	100m	150m	3 0			1 4	500	10u	5 0	250u§	100 §	3.5k	125J	3.0	S132
24♦	C281PE	1 5k	235	85C	100m	150m	3 0			1.4	500	10u	5.0	250u§	100 §	3 5k	125J	3 0	S247a
25#	61TB15	1 5k	275	67B		30	3 0	40m		2 4	665					3 2	125	2 0	M308a
26	260ZK	1.5k	275	80		15	3 0	15m	125J	1 2	100				300	5 0k	125		TO93
27#	CS220-15	1 5k	290	70	100m	150m	3 0	50m	125	1.6	600			60u	1 0k	5 2k	125	30	
28#	CS300-15	1.5k	300	85	100m	150m	3.0	40m	125	1 5	900			100u	1 0k	7 0k	125	50	
29#	62TB15	1 5k	315	65B		30	3 0	40m		2 2	665					3 7k	125	2.0	M308a
30#	70TB15	1 5k	355	67B		30	3.0	40m		2.2	850					4.1	125	2 0	M308a
31#	71TB15	1 5k	400	65B		30	3.0	40m		2 0	850					4 6k	125	2 0	M308a
32#	73TB15	1 5k	430	64B		30	3 0	40m		2 0	1 0k					5 1k	125	2 0	M308a
33#	CR7K1603A45	1 5k	435	65C	55mØ	150m	3 5	50m	125J	1.8	1.0k	3 5u	600	180u	100	6 0k	125J	5.0 Ø	M308b
34#	BStN25100	1 5k	440	41C	180m	300m	2 0	10m	120J					250u§	50 §	5 1k	120J		
35#	CR7K1603A4	1 5k	460	65C	55mØ	150m	3 5	50m	125J	1 7	100	3 5u	600	180u	100	6 4k	125J	5 0 Ø	M308b
36#	74TB15	1 5k	470	63B		300m	3 0	40m		1 8	1 0k					5 6k	125	2 0	M308a
37#	CS500-15	1 5k	500	85	100m	500	3 5	40m	125	1 6	1 5k			200u	1 0k	10k	125	50	
38#	80TB15	1 5k	510	59B		30	3 0	40m		1 5	1 2k					6.4k	125	2 0	M308a
39▼	NLC501PE	1.5k	550	25	250m	150m	6.5 §			1.5	1 0k			200u§	100 §	7.0k	125J	5 0 †	M593
40#	81TB15	1 5k	550	56B		30	3 0	40m		1 7	1 2k					7.0k	125	2 0	M308a
41▼	470PA150	1 5k☑	850	60C	500m	150m	3 0	14m	125C	1 7 †	1 7k		250	120u§	100 §	8 0k△	125J	3 0 †	Y200c
42#	BStP05100	1 5k	1 0k	39C	300m	300m	2 0	20m	115J					250u§	50 §	10k	115J		
43▼	C601PE	1 5k	1 1k△	72	500	150	6 5					4 0		300	100	10k	125	40	
44	C501PN	1 6k			250m	150m	6 5	15m	25J	1 5 †	1.0k†		450	200u§	100 §	7.0k	125J	5 0 †	M464
45#	TK16	1 6k	35	25A	50mØ	125m	3.0	10m	100J	2 0	100	5.0u§	100	100u§	50 §	700		375m	S317
46#	BStF05110	1 6k	40	78C		100m	2 0	5 0m	120J					150u§	50 §	320	120J		S18f
47▼#	SKT45-16A	1 6k	45	85C	130m	100m	3 0			1 8	50			50u	50 §Ø	800	130A	300m	S354
48▼#	SKT45-16B	1 6k	45	85C	130m	100m	3 0			1.8	50			50u	50 §	800	130A	300m	S354
49▼#	SKT45-16C	1 6k	45	85C	130m	100m	3 0			1 8	50			50u	200 §	800	130A	300m	S354
50▼#	SKT45-16D	1 6k	45	85C	130m	100m	3 0			1.8	50			50u	50 §	800	130A	300m	S354
51▼#	SKT45-16E	1 6k	45	85C	130m	100m	3 0			1 8	50			50u	1 0k§	800	130A	300m	S354
52#	TK1160	1 6k	70	25A	50mØ	125m	3 0	10m	125J	2 0	200	5.0u§	100	100u§	50 §	1 0k		375m	S317
53	2N4369	1 6k	70	82C	200m	250m$	5 0 $	10m	125C	2 0 †	70				100	1 6k*§	125C	15 Ø	TO94
54	2N4379	1 6k	70	82C	200m	250m$	5 0 $	10m	125C	2.0 †	70				100	1 6k*§	125C	15 Ø	TO83
55#	CR100CX32	1 6k	70	82C		100m	3 0	15m	110J	2 5	200		70	30u☑	100 △	1 5k△	110J	16 Ø	S237e
56▼#	SKT70-16A	1 6k	70	85C	150m	150m	3 0			1.8	60			70u	50 §Ø	1 7k	130A	500m	S260c
57▼#	SKT70-16B	1 6k	70	85C	150m	150m	3 0			1.8	60			70u	50 §	1 7k	130A	500m	S260c
58▼#	SKT70-16C	1 6k	70	85C	150m	150m	3 0			1 8	60			70u	200 §	1 7k	130A	500m	S260c
59▼#	SKT70-16D	1 6k	70	85C	150m	150m	3 0			1 8	60			70u	500 §	1 7k	130A	500m	S260c
60▼#	SKT70-16E	1 6k	70	85C	150m	150m	3 0			1.8	60			70u	1.0k§	1 7k	130A	500m	S260c
61#	CS42-16	1 6k	82	35	200m	110m	2 0	10m	115	1 9	180			180u	200	900	115	4 0	
62▼#	T70N1600	1 6k	85	85C	200m	150m	5 0m	25m	125J	2 8	400	4 5u	30	50u	50	2 0k§	125J		
63▼#	SKT90-16A	1 6k	90	85C	150m	150m	3 0			1 6	110			70u	50 §Ø	2.2k	130A	500m	S260c
64▼#	SKT90-16B	1 6k	90	85C	150m	150m	3 0			1 6	110			70u	50 §	2 2k	130A	500m	S260c
65▼#	SKT90-16C	1 6k	90	85C	150m	150m	3 0			1 6	110			70u	200 §	2 2k	130A	500m	S260c
66▼#	SKT90-16D	1 6k	90	85C	150m	150m	3 0			1 6	110			70u	500 §	2 2k	130A	500m	S260c
67#	TT16	1 6k	100	25A	50mØ	500m	3 0	25m	100J	2.2	350	5 0u§	100	100u§	50 §	2 0k		1 5	S204a
68#	BStH05110	1 6k	110	52C	200m	200m	2 0	10m	120J					250u§	50 §	900	120J		S189e
69▼#	SKT110-16A	1 6k	110	85C	200m	200m	3 0			1.6	70			80u	50 §Ø	2 8k	130A	1 0	S260d
70▼#	SKT110-16B	1 6k	110	85C	200m	200m	3 0			1 6	70			80u	50 §	2 8k	130A	1 0	S260d
71▼#	SKT110-16C	1.6k	110	85C	200m	200m	3 0			1.6	70			80u	200 §	2 8k	130A	1 0	S260d
72▼#	SKT110-16D	1 6k	110	85C	200m	200m	3 0			1.6	70			80u	500 §	2.8k	130A	1 0	S260d
73▼#	SKT110-16E	1.6k	110	85C	200m	200m	3 0			1.6	70			80u	1 0k§	2 8k	130A	1 0	S260d
74#	SF80U11	1 6k	126	80C	200m	150m	3 0	15m	125J	1.7	250	6 0u	160		15 △	1 6k	125J	5 0 Ø	S337a
75#	SH80U12A	1.6k	126	80C	200m	150m	3 0	20m	115J	2.0	250	6 0u	160	30u	100 △	1.6k	115J	16 Ø	S337
76▼#	SKT140-16A	1.6k	140	85C	200m	200m	3 0			1.6	200			80u	50 §Ø	3 9k	130A	1 0	S260d
77▼#	SKT140-16B	1 6k	140	85C	200m	200m	3 0			1.6	200			80u	50 §	3.9k	130A	1 0	S260d
78▼#	SKT140-16C	1.6k	140	85C	200m	200m	3 0			1.6	200			80u	200 §	3.9k	130A	1 0	S260d
79▼#	SKT140-16D	1 6k	140	85C	200m	200m	3 0			1 6	200			80u	500 §	3 9k	130A	1 0	S260d
80#	TT2160	1 6k	150	25A	50mØ	500m	3 0	25m	125J	1 7	450	5 0u§	100	100u§	50 §	3 2k		1 5	S204a
81♦#	BStL25110	1 6k	150	55C	150m	300m	2 0	10m	120J	2 0	450				50 §	2 3k	125	20	
82▼#	SKT170-16A	1 6k	170	85C	200m	250m	3 0			1.6	500			100u	50 §Ø	6 6k	130A	1 0	S355
83▼#	SKT170-16B	1 6k	170	85C	200m	250m	3 0			1.6	500			100u	50 §	6 6k	130A	1 0	S355
84▼#	SKT170-16C	1 6k	170	85C	200m	250m	3 0			1 6	500			100u	200	6 6k	130A	1 0	S355
85▼#	SKT170-16D	1 6k	170	85C	200m	250m	3 0			1 6	500			100u	500 §	6 6k	130A	1 0	S355
86▼#	SKT170-16E	1 6k	170	85C	200m	250m	3 0			1 6	500			100u	1 0k§	6 6k	130A	1 0	S355
87▼#	2SF1151	1.6k	175	75C		300m	3 0	15m	125J	1 7 §	500				100 △	4 0k△	125J	16 Ø	S237e
88#	CR150F32	1 6k	175	75C		300m	3 0	15m	125J	1.7 §	500				100 §	4 0k	125J	16 Ø	S237e
89#	FT150B32	1.6k	175	75C		300m	3 0	15m	125J	1 7	500 §				100 △	4 0k△	125J	16 Ø	M567
90#	56TB16	1 6k	190			.30		40m		2.0	370					1 2k	125	2 0 †	M428
91#	CS130-16	1 6k	190	55	100m	150m	3 0	30m	125	1 7	400			60u	1 0k	3 5k	125	30	
92▼#	TY120SP16K2	1.6k	190	70B	40m	220m	3 5	20m	125J	1.7	300				200 §	2 7k	125J	3 0 †	S375a
93#	TT3160	1 6k	200	85C	40mØ	500m	3 0	25m	125J	1.6	600	5 0u§		100u§	100 Ø§	4 0k		1.5	S204a
94#	57TB16	1 6k	210			30		40m		2.0	420					1 3k	125	2 0 †	M428
95▼#	SKT220-16A	1 6k	220	85C	200m	250m	3 0			1 6	800			100u	50 §Ø	7 8k	130A	1 0	S355
96▼#	SKT220-16B	1 6k	220	85C	200m	250m	3 0			1.6	800			100u	50 §	7.8k	130A	1 0	S355
97▼#	SKT220-16C	1 6k	220	85C	200m	250m	3 0			1.6	800			100u	200 §	7 8k	130A	1 0	S355
98▼#	SKT220-16D	1.6k	220	85C	200m	250m	3 0			1.6	800			100u	500 §	7 8k	130A	1 0	S355
99#	58TB16	1 6k	225			30		40m		2.0	450					1 4k	125	2 0 †	M428
100#	2SF560	1 6k	235	55		125m	2 5	15m	125J	2.1	1 0k		100	150	200	3 5k	125J	10	S167
101#	SF150U11	1 6k	235	76S	200m	150m	3 0	20m	125J	1 5	500					3 5k	125J	16	S91b
102♦	C280PM	1 6k	235	85C	100m	150m	3 0			1 4	500	10u	5 0	250u§	100 §	3 5k	125J	3 0	S132
103♦	C281PM	1 6k	235	85C	100m	150m	3 0			1.4	500	10u	5 0	250u§	100 §	3 5k	125J	3 0	S247a
104#	FT250B32	1 6k	250	55C		350m	4 0	15m	125J	1.8	780 §				100 △	5 0k△	125J	16 Ø	M567
105#	2SF543	1.6k	250	65C		350m	4.0	15mØ	125J	1 8	780				10 △	5 0k	125J	16 Ø	S158b
106♦#	BTX41-1600R	1 6k	250	65B	150m	250m	2 5	10m	110J	1.6 §	600 §	20u	250	200u	20 §	5 5k*	110J	2 0 †	S237g
107#	CR250F32	1.6k	250	65C		350m	4 0	15m	125J	1 8 §	780				100 §	5 0k	125J	3 0 †	S158e
108#	61TB16	1 6k	275	67B		30	3 0	40m		2.4	665					3 2	125	2 0	M308a
109▼#	T235N1600	1.6k	280	85C	300m	200m	2 0	50m	125J	1.8	500	4 0u	100	60u	50	5 5k§	125J		M330d
110#	CS220-16	1 6k	290	70	100m	150m	3 0	50m	125	1.6	600			60u	1 0k	5 2k	125	30	

SYMBOLS AND CODES EXPLAINED IN INTERPRETER

6. SILICON CONTROLLED RECTIFIERS

IN ORDER OF (1) PEAK REV. VOLT., (2) MAX. CONT. CUR., (3) TEMPERATURE, (4) TYPE No.

LINE No.	4 TYPE No.	1 PRV and VBO (V)	MAX. CONT. CURRENT 2 Idc (A)	3 at TEMP (°C)	MAX. HOLD. CUR Ih @ 25°C (A)	MAX. GATE FIRING SPEC at 25°C Igf (A)	Vgf (V)	MAX SAT I Ir@PRV and Is@VBO (A)	at TEMP (°C)	MAX. FWD. VOLT DROP at 25°C Vf (V)	@ If (A)	SWITCHING TIME at 25°C Ton (s)	for If (A)	Toff (s)	MIN. dV/dt @ 25°C (V/us)	ABS. MAX. RATINGS 1Cy PK SURGE I@25°C (A)	MAX TEMP (°C)	MAX GATE POWER (W)	DWG. No.
1▼#	2SF930	1 6k	300	15A		350m	4 0	15m	125J	1.8 §	780				100 △	5 0k△	125J	16 ∅	S300
2#	CR300F32	1 6k	300	15A		350m	4 0	15m	125J	1.8 §	780				100 §	5.0k	125J	16 ∅	S300
3#	FT300A32	1.6k	300	66C		200m	3 0	30m	125J	1.9	940 §				350 △	5 0k△	125J	16 ∅	M567a
4#	CS300-16	1.6k	300	85	100m	150m	3 0	40m	125	1.5	900			100u	1 0k	7.0k	125	50	
5▼#	TY290SP16K2	1 6k	305	70B	45m	220m	3 5	20m	125J	1.7	1 0k	10u∅	500	30u∅	200 §	7 2k	125J	3.0 †	S373
6▼#	TYA290SP16K2	1 6k	305	70B	45m	220m	3 5	20m	125J	1.6	600				200 §	6.4k	125J	3 0 †	S374
7#	62TB16	1 6k	315	65B		.30	3 0	40m		2.2	665					3 7k	125	2.0	M308a
8▼#	BStN15110	1 6k	350	64C	150m	300m	2 0	15m	125J	1.9	1 0k				200 §	5 1k	125	20	
9#	2SF837	1 6k	350	80		125m	3 0	25m	125J	1.6	1 0k		250	150	200	7.0k	125J	20	S280
10#	70TB16	1 6k	355	67B		30	3 0	40m		2.2	850					4 1	125	2.0	M308a
11#	71TB16	1 6k	400	65B		30	3 0	40m		2.0	850					4.6k	125	2 0	M308a
12#	FT500A32	1.6k	400	75C		350m	4 0	30m	125J	2.2 §	1 2k				200 §	7.0k	125J	16 ∅	M406
13▼#	2SF936	1.6k	400	77C		350m	4 0	30m	125J	2.2 §	1 2k				200 △	7 0k△	125J	16 ∅	M406
14#	73TB16	1.6k	430	64B		30	3 0	40m		2.0	1 0k					5 1k	125	2.0	M308a
15#	CR7K1703A45	1 6k	435	65C	55m∅	150m	3 5	50m	125J	1.8	1 0k	3.5u	600	180u	100	6.0k	125J	5.0 ∅	M308b
16#	BStN25110	1 6k	440	41C	180m	300m	2 0	10m	120J					250u§	50 §	5 1k	120J		S301
17▼#	TY490SP16K2	1 6k	450	70B	31m	220m	3.5	20m	125J	1.6	1.0k				200 §	8.9k	125J	3 0 †	S373
18▼#	TYA490SP16K2	1.6k	450	70B	31m	220m	3 5	20m	125J	1.6	1.0k				200 §	8 9k	125J	3.0 †	S374
19#	CR7K1703A4	1 6k	460	65C	55m∅	150m	3 5	50m	125J	1.7	100	3.5u	600	180u	100	6.4k	125J	5.0 ∅	M308b
20#	SF300U11	1 6k	470	65C	300m	260m	3.5	20m	125J	1.6	1 0k	6.0u			15 §	5.0k	125J	3 0	S267a
21#	CS500-16	1 6k	500	85	100m	500	3 5	40m	125	1.6	1 5k			200u	1.0k	10k	125	50	
22▼	NLC501PM	1 6k	550	25	250m	150m	6 5 §			1.5	1 0k			200u§	100 §	7 0k	125J	5.0 †	M593
23▼#	TYC300SP16K2	1.6k	550	70C	31m	220m	3 5	20m	125J	1 7	1.0k				200 §	7.4k	125J	3 0 †	S372
24▼#	TY500SP16K2	1.6k	590	70C	31m	220m	3 5	20m	125J	1 6	1.0k				200 §	10k	125J	3 0 †	S372
25#	V2060X	1 6k	628	65		150m	3 0	50m	125J	2.2					200	7 0k	125J	20	M559
26#	SH400U23	1 6k	630	65C	300m	260m	3.5	35m	115J	1.9	1.2k	6.0u	800	50u	50 △	7.2k	115J	20 ∅	M570
27#	SF500U22	1 6k	785	125J	300m	260m	3 5	50m	125J	2.1	1 5k	10u	500	400u§	200 △	8.0k	125J	4.0 †	M434
28▼	470PA160	1 6k∅	850	60C	500m	150m	3 0	13m	125C	1.7 †	1 7k		250	120u§	100 §	8.0k△	125J	3 0 †	Y200c
29▼	C602PM	1 6k	940 △	72	500	150	6 5			1.7	1 0k	4.0		350	100	6.5k	125	40	
30#	BStP05110	1 6k	1 0k	39C	300m	300m	2.0	20m	115J					250u§	50 §	10k	115J		M482
31▼#	YST801SP16K2	1 6k	1.0k	70C	100m	220m	3.5	20m	125J	1 6	1 8k				200 §	16k	125J	3.0 †	S371
32▼	C601PM	1 6k	1 1k△	72	500	150	6 5					4.0		300	100	10k	125	40	
33	C501PS	1 7k			250m	150m	6 5	15m	25J	1 5 †	1.0k†		450	200u§	100 §	7.0k	125J	5 0 †	M464
34#	CR100CX34	1 7k	70	82C		100m	3 0	15m	110J	2.5	200		70	30u∅	100 △	1.5k△	110J	16 ∅	S237e
35#	56TB17	1.7k	190			30		40m		2.0	370					1.2k	125	2.0 †	M428
36#	57TB17	1 7k	210			30		40m		2 0	420					1.3k	125	2 0 †	M428
37#	58TB17	1 7k	225			30		40m		2.0	450					1.4k	125	2.0 †	M428
38♦	C280PS	1 7k	235	85C	100m	150m	3 0			1 4	500	10u	5 0	250u§	100 §	3.5k	125J	3.0	S132
39♦	C281PS	1.7k	235	85C	100m	150m	3 0			1.4	500	10u	5.0	250u§	100 §	3.5k	125J	3.0	S247a
40#	61TB17	1.7k	275	67B		.30	3.0	40m		2.4	665					3.2	125	2.0	M308a
41#	62TB17	1 7k	315	65B		30	3 0	40m		2 2	665					3.7k	125	2 0	M308a
42#	70TB17	1.7k	355	67B		30	3 0	40m		2.2	850					4.1	125	2.0	M308a
43#	71TB17	1 7k	400	65B		.30	3 0	40m		2.0	850					4.6k	125	2 0	M308a
44#	73TB17	1.7k	430	64B		30	3 0	40m		2 0	1 0k					5.1k	125	2 0	M308a
45#	CR7K1803A45	1.7k	435	65C	55m∅	150m	3 5	50m	125J	1.8	1.0k	3.5u	600	180u	100	6.0k	125J	5 0 ∅	M308b
46#	CR7K1803A4	1.7k	460	65C	55m∅	150m	3 5	50m	125J	1.7	100	3.5u	600	180u	100	6.4k	125J	5.0 ∅	M308b
47▼	NLC501PS	1 7k	550	25	250m	150m	6.5 §			1 5	1 0k			200u§	100 §	7.0k	125J	5 0 †	M593
48▼	470PA170	1 7k∅	850	60C	500m	150m	3.0	13m	125C	1 7 †	1 7k		250	120u§	100 §	8.0k△	125J	3.0 †	Y200c
49▼	C602PS	1.7k	940 △	72	500	150	6.5			1.7	1 0k	4.0		350	100	6.5k	125	40	
50▼	C601PS	1.7k	1.1k△	72	500	150	6.5					4.0		300	100	10k	125	40	
51	2N4370	1.8k	70	82C	200m	250m$	5.0 $	10m	125C	2.0 †	70				100	1.6k*§	125C	15 ∅	TO94
52	2N4380	1 8k	70	82C	200m	250m$	5 0 $	10m	125C	2 0 †	70				100	1.6k*§	125C	15 ∅	TO83
53#	CR100CX36	1.8k	70	82C		100m	3 0	15m	110J	2.5	200		70	30u∅	100 △	1.5k△	110J	16 ∅	S237e
54▼#	2SF1152	1.8k	175	75C		300m	3.0	15m	125J	1.7 §	500				100 △	4.0k△	125J	16 ∅	S237e
55#	CR150F36	1.8k	175	75C		300m	3 0	15m	125J	1.7 §	500				100 §	4.0k	125J	16 ∅	S237e
56#	56TB18	1 8k	190			30		40m		2 0	370					1.2k	125	2 0 †	M428
57▼#	TY120SP18K2	1 8k	190	70B	40m	220m	3 5	19m	125J	1.7	300				200 §	2.7k	125J	3 0 †	S375a
58#	57TB18	1.8k	210			30		40m		2.0	420					1.3k	125	2.0 †	M428
59#	58TB18	1.8k	225			.30		40m		2.0	450					1.4k	125	2.0 †	M428
60	C281PN	1 8k	235 △			150m	3.0										125A		S247a
61#	BTX46/1800R	1.8k	235 △	110J	300m§	300m	3.0	10m	110J	1.5 §	500	8 0u§	200	150u	100 ∅§	3.0k	110J	10 ∅	S228
62#	2SF544	1.8k	250	65C		350m	4.0	15m∅	125J	1.8	780				10 △	5.0k	125J	16 ∅	S158b
63#	CR250F36	1 8k	250	65C		350m	4 0	15m	125J	1.8 §	780				100 §	5.0k	125J	3.0 †	S158e
64#	61TB18	1 8k	275	67B		.30	3 0	40m		2 4	665					3.2	125	2.0	M308a
65▼#	T235N1800	1.8k	280	85C	300m	200m	2 0	50m	125J	1 8	500	4.0u	100	60u	50	5.5k§	125J		M330d
66▼#	2SF931	1.8k	300	15A		350m	4 0	15m	125J	1.8 §	780				100 △	5.0k△	125J	16 ∅	S300
67#	CR300F36	1 8k	300	15A		350m	4.0	15m	125J	1 8 §	780				100 §	5.0k	125J	16 ∅	S300
68#	FT300A36	1 8k	300	66C		200m	3.0	30m	125J	1 9	940 §				350 △	5.0k△	125J	16 ∅	M567a
69▼#	TY290SP18K2	1 8k	305	70B	45m	220m	3 5	19m	125J	1 7	1.0k	10u∅	500	30u∅	200 §	7.2k	125J	3.0 †	S373
70▼#	TYA290SP18K2	1.8k	305	70B	45m	220m	3 5	19m	125J	1.6	600				200 §	6.4k	125J	3.0 †	S374
71#	62TB18	1.8k	315	65B		30	3 0	40m		2 2	665					3.7k	125	2.0	M308a
72#	BTX41/1800R	1.8k	315	110J	300m§	300m	3 0	10m	110J	1 5 §	600	8.0u§	200	150u	100 ∅§	3.5k*	110J	10 ∅	S228
73#	70TB18	1.8k	355	67B		30	3 0	40m		2 2	850					4.1	125	2.0	M308a
74#	71TB18	1.8k	400	65B		.30	3.0	40m		2.0	850					4.6k	125	2.0	M308a
75#	FT500A36	1.8k	400	75C		350m	4 0	30m	125J	2.2 §	1.2k				200 §	7.0k	125J	16 ∅	M406
76▼#	2SF937	1.8k	400	77C		350m	4 0	30m	125J	2.2 §	1.2k				200 △	7.0k△	125J	16 ∅	M406
77#	73TB18	1.8k	430	64B		30	3.0	40m		2.0	1 0k					5.1k	125	2.0	M308a
78#	CR7K1903A45	1.8k	435	65C	55m∅	150m	3 5	50m	125J	1 8	1.0k	3.5u	600	180u	100	6.0k	125J	5.0 ∅	M308b
79▼#	TY490SP18K2	1.8k	450	70B	31m	220m	3.5	19m	125J	1.6	1.0k				200 §	8.9k	125J	3.0 †	S373
80▼#	TYA490SP18K2	1.8k	450	70B	31m	220m	3 5	19m	125J	1.6	1.0k				200 §	8.9k	125J	3 0 †	S374
81▼#	TYC300SP18K2	1.8k	550	70C	31m	220m	3 5	19m	125J	1.7	1.0k				200 §	7.4k	125J	3 0 †	S372
82▼#	TY500SP18K2	1.8k	590	70C	31m	220m	3 5	19m	125J	1.6	1 0k				200 §	10k	125J	3.0 †	S372
83▼	C602PN	1.8k	940 △	72	500	150	6 5			1 7	1.0k	4.0		350	100	6.5k	125	40	
84▼#	YST801SP18K2	1.8k	1 0k	70C	100m	220m	3.5	19m	125J	1.6	1.8k				200 §	16k	125J	3.0 †	S371
85#	56TB19	1 9k	190			30		40m		2.0	370					1.2k	125	2.0 †	M428
86#	57TB19	1.9k	210			30		40m		2.0	420					1.3k	125	2.0 †	M428
87#	58TB19	1.9k	225			30		40m		2.0	450					1.4k	125	2.0 †	M428
88#	61TB19	1.9k	275	67B		30	3 0	40m		2.4	665					3.2	125	2.0	M308a
89#	62TB19	1.9k	315	65B		30	3 0	40m		2.2	665					3.7k	125	2.0	M308a
90#	70TB19	1.9k	355	67B		.30	3.0	40m		2.2	850					4.1	125	2.0	M308a
91#	71TB19	1.9k	400	65B		30	3 0	40m		2.0	850					4.6k	125	2 0	M308a
92#	73TB19	1.9k	430	64B		30	3 0	40m		2.0	1.0k					5.1k	125	2.0	M308a
93#	CR7K2003A45	1.9k	435	65C	55m∅	150m	3 5	50m	125J	1.8	1.0k	3.5u	600	180u	100	6.0k	125J	5.0 ∅	M308b
94▼	C602PT	1 9k	940 △	72	500	150	6 5			1.7	1.0k	4.0		350	100	6.5k	125	40	
95#	56TB20	2.0k	190			30		40m		2.0	370					1.2k	125	2.0 †	M428
96#	57TB20	2 0k	210			.30		40m		2.0	420					1.3k	125	2 0 †	M428
97#	58TB20	2.0k	225			.30		40m		2.0	450					1.4k	125	2.0 †	M428
98#	61TB20	2.0k	275	67B		.30	3.0	40m		2.4	665					3.2	125	2 0	M308a
99▼#	T235N2000	2.0k	280	85C	300m	200m	2.0	50m	125J	1.8	500	4.0u	100	60u	50	5.5k§	125J		M330d
100▼#	T236N2000	2.0k	280	85C	300m	200m	2.0	50m	125J	1.8	500	4.0u	100	100u	50	5.0k§	125J		M330d
101#	FT300A40	2.0k	300	61C		200m	3.0	30m	125J	2.1	940 §				350 △	5.0k△	125J	16 ∅	M567a
102#	62TB20	2.0k	315	65B		300m	3.0	40m		2.2	665					3.7k	125	2 0	M308a
103#	70TB20	2.0k	355	67B		.30	3.0	40m		2.2	850					4.1	125	2.0	M308a
104#	71TB20	2.0k	400	65B		.30	3.0	40m		2.0	850					4.6k	125	2.0	M308a
105#	FT500A40	2.0k	400	75C		350m	4.0	30m	125J	2.2 §	1 2k				200 §	7.0k	125J	16 ∅	M406
106▼#	2SF938	2.0k	400	77C		350m	4.0	30m	125J	2.2 §	1.2k				200 △	7.0k△	125J	16 ∅	M406
107#	73TB20	2.0k	430	64B		30	3 0	40m		2.0	1.0k					5.1k	125	2.0	M308a
108#	CR7K2103A45	2.0k	435	65C	55m∅	150m	3.5	50m	125J	1.8	1.0k	3.5u	600	180u	100	6.0k	125J	5.0 ∅	M308b
109#	SF500Y22	2.0k	785	125J	300m	260m	3.5	50m	125J	2.1	1.5k	10u∅	500	400u§	200 △	8.0k	125J	4.0 †	M434
110▼	C602L	2.0k	940 △	72	500	150	6.5			1.7	1.0k	4.0		350	100	6.5k	125	40	

SYMBOLS AND CODES EXPLAINED IN INTERPRETER

6. SILICON CONTROLLED RECTIFIERS

IN ORDER OF (1) PEAK REV. VOLT., (2) MAX. CONT. CUR., (3) TEMPERATURE, (4) TYPE No.

LINE No.	4 TYPE No.	1 PRV and VBO (V)	MAX. CONT. CURRENT 2 Idc (A)	3 at TEMP (°C)	MAX. HOLD. CUR Ih @ 25°C (A)	MAX. GATE FIRING SPEC at 25°C Igf (A)	Vgf (V)	MAX SAT I Ir@PRV and Is@VBO (A)	at TEMP (°C)	MAX. FWD. VOLT. DROP at 25°C Vf (V)	@ If (A)	SWITCHING TIME at 25°C Ton (s)	for If (A)	Toff (s)	MIN. dV/dt @ 25°C (V/us)	ABS. MAX. RATINGS 1Cy PK SURGE I@25°C (A)	MAX TEMP (°C)	MAX GATE POWER (W)	DWG. No.
1#	CR7K2203A45	2.1k	435	65C	55mØ	150m	3.5	50m	125J	1.8	1.0k	3.5u	600	180u	100	6.0k	125J	5.0 Ø	M308b
2▼	C602LA	2.1k	940 Δ	72	500	150	6.5			1.7	1.0k	4.0		350	100	6.5k	125	40	
3▼#	T175N2200	2.2k	230	85C	300m	200m	2.0	50m	125J	2.2	500	4.0u	100	100u	50	4.5k§	125J		M330d
4▼#	T236N2200	2 2k	280	85C	300m	200m	2.0	50m	125J	1.8	500	4.0u	100	100u	50	5.0k§	125J		M330d
5▼	C602LB	2.2k	940 Δ	72	500	150	6.5			1.7	1.0k	4.0		350	100	6.5k	125	40	
6▼	C602LC	2 3k	940 Δ	72	500	150	6.5			1.7	1.0k	4.0		350	100	6.5k	125	40	
7▼#	T175N2400	2.4k	230	85C	300m	200m	2.0	50m	125J	2.2	500	4.0u	100	100u	50	4.5k§	125J		M330d
8▼#	T236N2400	2.4k	280	85C	300m	200m	2.0	50m	125J	1.8	500	4.0u	100	100u	50	5.0k§	125J		M330d
9▼	C602LD	2.4k	940 Δ	72	500	150	6 5			1.7	1.0k	4.0		350	100	6.5k	125	40	
10#	FT300A50	2.5k	300	61C		200m	3.0	30m	125J	2.1	940 §				350 Δ	5.0kΔ	125J	16 Ø	M567a
11#	FT500A50	2.5k	400	75C		350m	4.0	30m	125J	2.2 §	1.2k				200 §	7.0k	125J	16 Ø	
12▼#	2SF939	2.5k	400	77C		350m	4.0	30m	125J	2.2 §	1 2k				200 Δ	7.0kΔ	125J	16 Ø	M406
13#	V2060EJ	2.5k	628	65		150m	3.0	50m	125J	2.2					200	7.0k	125J	20	M559
14#	SF500EX22	2.5k	785	125J	300m	260m	3 5	50m	125J	2.1	1 5k	10u	500	400u§	200 Δ	8 0k	125J	4.0 †	M434
15▼	C602LE	2.5k	940 Δ	72	500	150	6 5			1 7	1.0k	4.0		350	100	6.5k	125	40	
16▼#	T175N2600	2 6k	230	85C	300m	200m	2 0	50m	125J	2.2	500	4.0u	100	100u	50	4.5k§	125J		M330d
17#	FT500A60	3 0k	320	77C		350m	4 0	30m	125J	3 3 §	1.2k				200 Δ	5 0kΔ	125J	16 Ø	M406
18#	FT500A80	4 0k	320	77C		350m	4 0	30m	125J	3.3 §	1.2k				200 Δ	5.0kΔ	125J	16 Ø	M406

SYMBOLS AND CODES EXPLAINED IN INTERPRETER

7. MISCELLANEOUS SILICON PNPN DEVICES

IN ORDER OF (1) USE, (2) MAX FWD BKOVER VOLT (3) MAX REV VOLT, (4) MAX CUR, (5) TYPE No.

LINE No.	5 TYPE No.	1 USE	2 MAX. FWD. BKOVER VBO (V)	3 MAX. REV. PRV (V)	MAX CONT. CURRENT 4 If (A)	at TEMP (°C)	MAX. HOLD CUR Ih @ 25°C (A)	MAX GATE ON-OFF RATINGS @ 25°C TURN-ON Igf (A)	Vgf (V)	TURN-OFF Igo (A)	Vgo (V)	Ic (A)	MAX. SAT. CURRENT Is at VBO (A)	at TEMP (°C)	MAX. FWD. VOLT. DROP (V)	SWITCHING TIME @25°C Ton (s)	Toff (s)	MIN dV/dt V/us	ABS. MAX. RATINGS PK SRG CUR. (A)	MAX TEMP (°C)	DWG. No.
1	BIP7407G		70	70	20	25C	1 5m	10u	.70				10u	125J	1 5	1.0u	10u	100p☑	5 0	125J	C41*
2	BIP7407F		85	85	.20	25C	1.5m	10u	.70				10u	125J	1.5	1.0u	10u	100p☑	5.0	125J	C41*
3	GBS266E		200		6 0	75C	50m	50m	3.0				5.0m	100C	1.9				60 §	100C	TO66
4	GBS210E		200		10	75C	50m	100m	3 0				5.0m	100C	1 6				100 §	100C	TO66
5	TIC242B		200		15	70C		50m	3 0				1.0m	125	1.6			500	100	125A	S131g
6#	M9213-200		200	200	80	105C	100m	200m	3.0				10m	125J	2.0				1 2k	125J	S267
7	GBS466E		400		6 0	75C	50m	50m	3 0				5 0m	100C	1 9				60 §	100C	TO66
8	GBS410E		400		10	75C	50m	100m	3 0				5 0m	100C	1.6				100 §	100C	TO66
9	TIC242D		400		15	70C		50m	3 0				1 0m	125	1 6			500	100	125A	S131g
10#	M9213-450		450	450	80	105C	100m	200m	3.0				10m	125J	2.0				1.2k	125J	S267
11	TIC242E		500		15	70C		50m	3.0				1.0m	125	1.6			500	100	125A	S131g
12▼	1N3489	1		12	10	25	6 0m	125m	3.4				250u	125S		100n☑				125S	A1tj
13▼	1N3489A	1		12	10	25	6 0m	125m	3 4				250u	125S		100n☑				150S	A1tj
14▼	1N3490	1		12	10	25	45m	125m	3 4				250u	125S		300n☑				125S	A1tj
15	1N3771	1		120			4.0m								1.2	20u			10	125	A1me
16	1N3772	1		120			50m								1.2	30u			10	125	A1me
17	WF5AM	1	5.0	5 0	150m	25	15m									.20u	5.0u	1.0n☑		150A	A31e
18	WF5M	1	5.0	5 0	150m	25	45m									.20u	5.0u	1.0n☑		150A	A31e
19	M4L3052	1	10	10	150m	25A	20m									.05u	10u	40p☑	10	150J	DO7
20	WF10AM	1	10	10	150m	25	15m									20u	5 0u	1.0n☑		150A	A31e
21	WF10M	1	10	10	150m	25	45m									.20u	5.0u	1 0n☑		150A	A31e
22	M4L3053	1	11	11	150m	25A	20m									05u	.10u		10	150J	DO7
23	M4L3054	1	12	12	150m	25A	20m									05u	10u		10	150J	DO7
24	WF15AM	1	15	15	150m	25	15m									.20u	5 0u	1.0n☑		150A	A31e
25	WF15M	1	15	15	150m	25	45m									20u	5 0u	1 0n☑		150A	A31e
26	WF20B	1	20	15	150m	25	60m									.20u	5.0u	1.0n☑		85A	A31e
27	1N3936	1	20	20			8.0m														A1me
28	WF20	1	20	20	150m	25	45m									20u	5.0u	1.0n☑		85A	A31e
29	WF20A	1	20	20	150m	25	15m									20u	5 0u	1 0n☑		85A	A31e
30	WF20AM	1	20	20	150m	25	15m									20u	5.0u	1 0n☑		150A	A31e
31	WF20M	1	20	20	150m	25	45m									20u	5 0u	1.0n☑		150A	A31e
32	4E20M8	1	24	10	150m	50	15m								1 2 Ø	.10u	5.0u	100p☑	10	125	A1me
33	4E20M28	1	24	10	150m	50	45m								1.2 Ø	10u	5.0u	100p☑	10	125	A1me
34	1N3831	1	24	12	150m	50	15m								1.2 Ø	.10u	5.0u	80p☑	10	125	A1me
35	1N3839	1	24	12	150m	50	50m								1 2 Ø	10u	5.0u	80p☑	10	125	A1me
36	4E20-8	1	24	12	150m	50	15m								1 2 Ø	.10u	5 0u	100p☑	10	70	A1me
37	4E20-28	1	24	12	150m	50	45m								1 2 Ø	10u	5.0u	100p☑	10	70	A1me
38#	4EX580	1	25	11	150m	65A	8 0 Ø								1 5	100n	7 0u		10	65A	DO7
39	4E20A	1	26	12	150m	50	60m								1.2 Ø	10u	5.0u	100p☑	10	70	A1me
40	1N3832	1	29	15	150m	50	15m								1.2 Ø	10u	5.0u	70p☑	10	125	A1me
41	1N3840	1	29	15	150m	50	50m								1.2 Ø	10u	5.0u	70p☑	10	125	A1me
42	WF30B	1	30	23	150m	25	60m									20u	5.0u	1 0n☑		85A	A31e
43#	4EX582	1	30	26	150m	65A	8 0 Ø								1 5	100n	7 0u		10	65A	DO7
44	1N3935	1	30	30			30m														A1me
45	WF30	1	30	30	150m	25	45m									20u	5.0u	1.0n☑		85A	A31e
46	WF30A	1	30	30	150m	25	15m									.20u	5.0u	1 0n☑		85A	A31e
47	WF30AM	1	30	30	150m	25	15m									20u	5.0u	1 0n☑		150A	A31e
48	WF30M	1	30	30	150m	25	45m									20u	5.0u	1 0n☑		150A	A31e
49	TI42	1	32																1.0 *		A60b
50	TI43	1	32																1.0 *		A60b
51	4E30M8	1	34	15	150m	50	15m								1.2 Ø	10u	5.0u	70p☑	10	125	A1me
52	4E30M28	1	34	15	150m	50	45m								1.2 Ø	10u	5.0u	70p☑	10	125	A1me
53	1N3833	1	34	18	150m	50	15m								1.2 Ø	.10u	5.0u	60p☑	10	125	A1me
54	1N3841	1	34	18	150m	50	50m								1 2 Ø	.10u	5.0u	60p☑	10	125	A1me
55	4E30-8	1	34	18	150m	50	15m								1.2 Ø	.10u	5.0u	70p☑	10	70	A1me
56	4E30-28	1	34	18	150m	50	45m								1.2 Ø	10u	5.0u	70p☑	10	70	A1me
57	WF34E	1	34	25	150m	25	60m									20u	5 0u	1 0n☑		85A	A31e
58#	4EX581	1	35	19	150m	65A	8 0 Ø								1.5	100n	7 0u		10	65A	DO7
59	4E30A	1	36	18	150m	50	60m								1.2 Ø	.10u	5.0u	70p☑	10	70	A1me
60	1N3834	1	39	21	150m	50	15m								1.2 Ø	.10u	5.0u	50p☑	10	125	A1me
61	1N3842	1	39	21	150m	50	50m								1.2 Ø	.10u	5.0u	50p☑	10	125	A1me
62	WF40B	1	40	30	150m	25	60m									20u	5.0u	1.0n☑		85A	A31e
63	WF40	1	40	40	150m	25	45m									.20u	5.0u	1.0n☑		85A	A31e
64	WF40A	1	40	40	150m	25	15m									20u	5 0u	1 0n☑		85A	A31e
65	WF40AM	1	40	40	150m	25	15m									20u	5.0u	1.0n☑		150A	A31e
66	WF40M	1	40	40	150m	25	45m									20u	5 0u	1 0n☑		150A	A31e
67	4E40M8	1	44	20	150m	50	15m								1.2 Ø	.10u	5 0u	50p☑	10	125	A1me
68	4E40M28	1	44	20	150m	50	45m								1.2 Ø	10u	5 0u	50p☑	10	125	A1me
69	1N3835	1	44	24	150m	50	15m								1 2 Ø	10u	5.0u	45p☑	10	125	A1me
70	1N3843	1	44	24	150m	50	50m								1 2 Ø	.10u	5.0u	45p☑	10	125	A1me
71	4E40-8	1	44	24	150m	50	15m								1 2 Ø	.10u	5 0u	50p☑	10	70	A1me
72	4E40-28	1	44	24	150m	50	45m								1 2 Ø	10u	5.0u	50p☑	10	70	A1me
73	4E40A	1	46	24	150m	50	60m								1.2 Ø	.10u	5.0u	50p☑	10	70	A1me
74	1N3836	1	49	27	150m	50	15m								1 2 Ø	10u	5.0u	45p☑	10	125	A1me
75	1N3844	1	49	27	150m	50	50m								1.2 Ø	.10u	5.0u	45p☑	10	125	A1me
76	WF50B	1	50	38	150m	25	60m									20u	5.0u	1 0n☑		85A	A31e
77	WF50	1	50	50	150m	25	45m									.20u	5.0u	1.0n☑		85A	A31e
78	WF50A	1	50	50	150m	25	15m									.20u	5.0u	1.0n☑		85A	A31e
79	WF50AM	1	50	50	150m	25	15m									20u	5.0u	1.0n☑		150A	A31e
80	WF50M	1	50	50	150m	25	45m									.20u	5.0u	1.0n☑		150A	A31e
81	4E50M8	1	54	25	150m	50	15m								1.2 Ø	10u	5.0u	40p☑	10	125	A1me
82	4E50M28	1	54	25	150m	50	45m								1.2 Ø	.10u	5.0u	40p☑	10	125	A1me
83	1N3837	1	54	30	150m	50	15m								1 2 Ø	.10u	5.0u	40p☑	10	125	A1me
84	1N3845	1	54	30	150m	50	50m								1 2 Ø	.10u	5.0u	40p☑	10	125	A1me
85	4E50-8	1	54	30	150m	50	15m								1.2 Ø	.10u	5.0u	40p☑	10	70	A1me
86	4E50-28	1	54	30	150m	50	45m								1 2 Ø	10u	5.0u	40p☑	10	70	A1me
87	4J50-5	1	55	30	300m	50	10m									.10u	5.0u	80p☑	20	70	A72
88	4J50-25	1	55	30	300m	50	45m									.10u	5.0u	80p☑	20	70	A72
89	4J50M5	1	55	30	300m	50	10m									10u	5.0u	80p☑	20	105	A72
90	4J50M25	1	55	30	300m	50	45m									.10u	5.0u	80p☑	20	105	A72
91	4E50A	1	56	30	150m	50	60m								1 2 Ø	.10u	5.0u	40p☑	10	70	A1me
92	WF100B	1	100	75	150m	25	60m									.20u	5 0u	1.0n☑		85A	A31e
93	1N3937	1	100	100			3 5m														A1me
94	WF100	1	100	100	150m	25	45m									.20u	5.0u	1.0n☑		85A	A31e
95	WF100A	1	100	100	150m	25	15m									.20u	5 0u	1.0n☑		85A	A31e
96	WF100AM	1	100	100	150m	25	15m									.20u	5.0u	1.0n☑		150A	A31e
97	WF100M	1	100	100	150m	25	45m									.20u	5 0u	1 0n☑		150A	A31e
98	4E100M8	1	110	50	150m	50	15m								1.2 Ø	.10u	5.0u	20p☑	10	125	A1me
99	4E100M28	1	110	50	150m	50	45m								1.2 Ø	.10u	5.0u	20p☑	10	125	A1me
100	1N3838	1	110	60	150m	50	15m								1 2 Ø	.10u	5.0u	30p☑	10	125	A1me
101	1N3846	1	110	60	150m	50	50m								1.2 Ø	10u	5.0u	30p☑	10	125	A1me
102	4E100-8	1	110	60	150m	50	15m								1.2 Ø	10u	5.0u	20p☑	10	70	A1me
103	4E100-28	1	110	60	150m	50	45m								1.2 Ø	.10u	5.0u	20p☑	10	70	A1me
104	4J100-5	1	110	60	300m	50	10m									.10u	5.0u	40p☑	20	70	A72
105	4J100-25	1	110	60	300m	50	45m									.10u	5.0u	40p☑	20	70	A72
106	4J100M5	1	110	60	300m	50	10m									.10u	5.0u	40p☑	20	105	A72
107	4J100M25	1	110	60	300m	50	45m									.10u	5.0u	40p☑	20	105	A72
108	WF200B	1	200	150	150m	25	60m									.20u	5.0u	1.0n☑		85A	A31e
109	WF200	1	200	200	150m	25	45m									20u	5.0u	1.0n☑		85A	A31e
110	WF200A	1	200	200	150m	25	15m									.20u	5.0u	1 0n☑		85A	A31e

SYMBOLS AND CODES EXPLAINED IN INTERPRETER

7. MISCELLANEOUS SILICON PNPN DEVICES

IN ORDER OF (1) USE, (2) MAX FWD BKOVER VOLT (3) MAX REV VOLT, (4) MAX CUR, (5) TYPE No.

LINE No	5 TYPE No	1 USE	2 MAX. FWD BKOVER VBO (V)	3 MAX REV. PRV (V)	MAX CONT. CURRENT 4 If (A)	at TEMP (°C)	MAX. HOLD CUR Ih @ 25°C (A)	MAX GATE ON-OFF RATINGS @ 25°C TURN-ON Igf (A)	Vgf (V)	TURN-OFF Igo (A)	Vgo (V)	Ic (A)	MAX SAT. CURRENT Is at VBO (A)	at TEMP (°C)	MAX. FWD. VOLT. DROP (V)	SWITCHING TIME @25°C Ton (s)	Toff (s)	MIN dV/dt V/us	ABS. MAX. RATINGS PK SRG CUR (A)	MAX TEMP (°C)	DWG. No.
1	WF200AM	1	200	200	150m	25	15m									.20u	5.0u	1.0n⊘		150A	A31e
2	WF200M	1	200	200	150m	25	45m									20u	5.0u	1.0n⊘		150A	A31e
3	4E200M8	1	220	100	150m	50	15m								1.2 ⊘	10u	5.0u	10p⊘	10	125	A1me
4	4E200M28	1	220	100	150m	50	45m								1.2 ⊘	10u	5.0u	10p⊘	10	125	A1me
5	4E200-8	1	220	120	150m	50	15m								1.2 ⊘	10u	5.0u	10p⊘	10	70	A1me
6	4E200-28	1	220	120	150m	50	45m								1.2 ⊘	.10u	5.0u	10p⊘	10	70	A1me
7	4J200-5	1	220	120	300m	50	10m									.10u	5.0u	20p⊘	20	70	A72
8	4J200-25	1	220	120	300m	50	45m									10u	5.0u	20p⊘	20	70	A72
9	4J200M5	1	220	120	300m	50	10m									10u	5.0u	20p⊘	20	105	A72
10	4J200M25	1	220	120	300m	50	45m									10u	5.0u	20p⊘	20	105	A72
11	4TP001	1	500				20m								2.5	10u				175A	S187
12	2N892	2	15	15	250m	75C	1.0m	05m	70	2.0m	1.5		10u	25A	2.0	1.4u	15u		20 §	125C	TO18
13	2N893	2	15	15	250m	75C	1.0m	05m	70	2.0m	1.5		10u	25A	2.0	1.4u	5.0u		20 §	125C	TO18
14	RTGC0101	2	15	15	250m	75A	10m	50m	1.0	50m	10	250m	100u	125	2.0	20u		100p	6.0	125A	TO18
15	3C15	2	15	15	500m	100	1.0m	05m	70	2.0m	1.5	4.0m	10u	25	1.0	1.4u	15u			125	TO9
16	3C15A	2	15	15	500m	100	1.0m	05m	70	2.0m	1.5	4.0m	10u	25	1.0	1.4u	5.0u			125	TO9
17	RTGD0101	2	15	15	500m	75A	10m	1.0m	1.0	50m	10	250m	100u	125	2.5	20u		100p	15	125A	TO5
18	2N894	2	30	15	250m	75C	1.0m	05m	70	2.0m	1.5		10u	25A	2.0	1.4u	15u		20 §	125C	TO18
19	2N895	2	30	15	250m	75C	1.0m	05m	70	2.0m	1.5		10u	25A	2.0	1.4u	5.0u		20 §	125C	TO18
20	CB5020	2	30	15	250m	75A		500u	1.0	50m	2.0	250m	100u	125	2.0				6.0	125	TO18
21	3C30	2	30	15	500m	100	1.0m	05m	70	2.0m	1.5	4.0m	10u	25	1.0	1.4u	15u			125	TO9
22	3C30A	2	30	15	500m	100	1.0m	05m	70	2.0m	1.5	4.0m	10u	25	1.0	1.4u	5.0u			125	TO9
23	3C1030	2	30	15	500m	100	25m	5.0m	1.5	15m	3.0	100m	10u	25	2.0	50u	5.0u		5.0	125C	TO9
24	3C1030A	2	30	15	500m	100	25m	5.0m	1.5	15m	3.0	100m	10u	25	2.0	50u	5.0u		5.0	125C	TO9
25	CD5000	2	30	15	1.0	25A		1.0m	1.0	100m	2.0	500m	50u	125	2.0				15	125	TO5
26	2N764	2	30	30	200m	25A	5.0m	1.0m	1.0	40m	8.0		50u	125	1.5					125	TO18
27	2N4320	2	30	30	250m	75	3.0m	50m	1.0	50m	10	250m	10u	25	2.0				5.0 §	125	TO52
28	RTGC0103	2	30	30	250m	75A	10m	50m	1.0	50m	10	250m	100u	125	2.0	20u		100p	6.0	125A	TO18
29	2N4326	2	30	30	390m	75	3.0m	50m	1.0	50m	10	250m	.10u	25	2.0				5.0 §	100	TO52
30	RTGD0103	2	30	30	500m	75A	10m	1.0m	1.0	50m	10	250m	100u	125	2.5	.20u		100p	15	125A	TO5
31	2N1686	2	30	30	1.0	25A	5.0m	1.0m	1.0	100m	10		50u	125A	2.0					125A	TO5
32#	3PT40	2	40 △	40	300m	50C	1.5m	1.0u	800m				1.0u	25A	2.0						C41g
33	2N896	2	60	15	250m	75C	1.0m	05m	.70	2.0m	1.5		10u	25A	2.0	1.4u	15u		20 §	125C	TO18
34	2N897	2	60	15	250m	75C	1.0m	05m	70	2.0m	1.5		10u	25A	2.0	1.4u	5.0u		20 §	125C	TO18
35	CB5021	2	60	15	250m	75A		500u	1.0	50m	2.0	250m	100u	125	2.0				6.0	125	TO18
36	3C60	2	60	15	500m	100	1.0m	05m	70	2.0m	1.5	4.0m	10u	25	1.0	1.4u	5.0u			125	TO9
37	3C60A	2	60	15	500m	100	1.0m	05m	70	2.0m	1.5	4.0m	10u	25	1.0	1.4u	5.0u			125	TO9
38	3C1060	2	60	15	500m	100	25m	5.0m	1.5	15m	3.0	100m	10u	25	2.0	50u	5.0u		5.0	125C	TO9
39	3C1060A	2	60	15	500m	100	25m	5.0m	1.5	15m	3.0	100m	10u	25	2.0	50u	5.0u		5.0	125C	TO9
40	CD5001	2	60	15	1.0	25A		1.0m	1.0	100m	2.0	500m	50u	125	2.0				15	125	TO5
41	2N765	2	60	60	200m	25A	5.0m	1.0m	1.0	40m	8.0		50u	125	1.5					125	TO18
42	2N4321	2	60	60	250m	75	3.0m	50m	1.0	50m	10	250m	10u	25	2.0				5.0 §	125	TO52
43	RTGC0106	2	60	60	250m	75A	10m	50m	1.0	50m	10	250m	100u	125	2.0	20u		100p	6.0	125A	TO18
44#	3PT60	2	60 △	60	300m	50C	1.5m	1.0u	800m				1.0u	25A	2.0						C41g
45	2N4327	2	60	60	390m	75	3.0m	50m	1.0	50m	10	250m	10u	25	2.0				5.0 §	100	TO52
46	RTGD0106	2	60	60	500m	75A	10m	1.0m	1.0	50m	10	250m	100u	125	2.5	20u		100p	15	125A	TO5
47	2N1687	2	60	60	1.0	25A	5.0m	1.0m	1.0	100m	10		50u	125A	2.0					125A	TO5
48#	3PT80	2	80 △	80	300m	50C	1.5m	1.0u	800m				1.0u	25A	2.0						C41g
49	2N898	2	100	15	250m	75C	1.0m	05m	70	2.0m	1.5		10u	25A	2.0	1.4u	15u		20 §	125C	TO18
50	2N899	2	100	15	250m	75C	1.0m	05m	70	2.0m	1.5		10u	25A	2.0	1.4u	5.0u		20 §	125C	TO18
51	CB5022	2	100	15	250m	75A		500u	1.0	50m	2.0	250m	100u	125	2.0				6.0	125	TO18
52	3C100⊘	2	100	15	500m	100	1.0m	50u	700m	2.0m	1.5	4.0m	10u	25	1.0	1.4u	15u			125	TO9
53	3C100A	2	100	15	500m	100	1.0m	05m	70	2.0m	1.5	4.0m	10u	25	1.0	1.4u	5.0u			125	TO9
54	3C1100	2	100	15	500m	100	25m	5.0m	1.5	15m	3.0	100m	10u	25	2.0	.50u	5.0u		5.0	125C	TO9
55	3C1100A	2	100	15	500m	100	25m	5.0m	1.5	15m	3.0	100m	10u	25	2.0	50u	5.0u		5.0	125C	TO9
56	CD5002	2	100	15	1.0	25A		1.0m	1.0	100m	2.0	500m	50u	125	2.0				15	125	TO5
57	2N766	2	100	100	200m	25A	5.0m	1.0m	1.0	40m	8.0		50u	125	1.5					125	TO18
58	2N4322	2	100	100	250m	75	3.0m	50m	1.0	50m	10	250m	.10u	25	2.0				5.0 §	125	TO52
59	RTGC0110	2	100	100	250m	75A	10m	50m	1.0	50m	10	250m	100u	125	2.0	20u		100p	6.0	125A	TO18
60#	3PT100	2	100 △	100	300m	50C	1.5m	1.0u	800m				1.0u	25A	2.0						C41g
61	2N4328	2	100	100	390m	75	3.0m	50m	1.0	50m	10	250m	10u	25	2.0				5.0 §	100	TO52
62	RTGD0110	2	100	100	500m	75A	10m	1.0m	1.0	50m	10	250m	100u	125	2.5	.20u		100p	15	125A	TO5
63	2N1688	2	100	100	1.0	25A	5.0m	1.0m	1.0	100m	10		50u	125A	2.0					125A	TO5
64	3GCRCX	2	100	100	3.0	25B	50m	50m	3.0	100m	5.0		4.0u⊘	25	2.5	2.0u	40u		40	125J	S56
65	3GCRCY	2	100	100	3.0	25B	50m	50m	3.0	200m	5.0		4.0u⊘	25	2.5	2.0u	40u		40	125J	S56
66	3GCRCZ	2	100	100	3.0	25B	50m	50m	3.0	300m	5.0		4.0u⊘	25	2.5	2.0u	40u		40	125J	S56
67	3C1150	2	150	15	500m	100	25m	5.0m	1.5	15m	3.0	100m	10u	25	2.0	50u	5.0u		5.0	125C	TO9
68	3C1150A	2	150	15	500m	100	25m	5.0m	1.5	15m	3.0	100m	10u	25	2.0	50u	5.0u		5.0	125C	TO9
69	2N4323	2	150	150	250m	75	3.0m	.50m	1.0	50m	10	250m	.10u	25	2.0				5.0 §	125	TO52
70	RTGC0115	2	150	150	250m	75A	10m	.50m	1.0	50m	10	250m	100u	125	2.0	20u		100p	6.0	125A	TO18
71	2N4329	2	150	150	390m	75	3.0m	50m	1.0	50m	10	250m	10u	25	2.0				5.0 §	100	TO52
72	RTGD0115	2	150	150	500m	75A	10m	1.0m	1.0	50m	10	250m	100u	125	2.5	.20u		100p	15	125A	TO5
73	3GCRDX	2	150	150	3.0	25B	50m	50m	3.0	100m	5.0		3.5u⊘	25	2.5	2.0u	40u		40	125J	S56
74	3GCRDY	2	150	150	3.0	25B	50m	50m	3.0	200m	5.0		3.5u⊘	25	2.5	2.0u	40u		40	125J	S56
75	3GCRDZ	2	150	150	3.0	25B	50m	50m	3.0	300m	5.0		3.5u⊘	25	2.5	2.0u	40u		40	125J	S56
76	2N900	2	200	15	250m	75C	1.0m	.05m	70	2.0m	1.5		10u	25A	2.0	1.4u	15u		20 §	125C	TO18
77	2N901	2	200	15	250m	75C	1.0m	05m	.70	2.0m	1.5		10u	25A	2.0	1.4u	5.0u		20 §	125C	TO18
78	CB5023	2	200	15	250m	75A		500u	1.0	50m	2.0	250m	100u	125	2.0				6.0	125	TO18
79	3C200	2	200	15	500m	100	1.0m	05m	70	2.0m	1.5	4.0m	10u	25	1.0	1.4u	15u			125	TO9
80	3C200A	2	200	15	500m	100	1.0m	05m	.70	2.0m	1.5	4.0m	10u	25	1.0	1.4u	5.0u			125	TO9
81	3C1200	2	200	15	500m	100	25m	5.0m	1.5	15m	3.0	100m	10u	25	2.0	50u	5.0u		5.0	125C	TO9
82	3C1200A	2	200	15	500m	100	25m	5.0m	1.5	15m	3.0	100m	10u	25	2.0	50u	5.0u		5.0	125C	TO9
83	CD5003	2	200	15	1.0	25A		1.0m	1.0	100m	2.0	500m	50u	125	2.0				15	125	TO5
84	2N767	2	200	200	200m	25A	5.0m	1.0m	1.0	40m	8.0		50u	125	1.5					125	TO18
85	2N4324	2	200	200	250m	75	3.0m	.50m	1.0	50m	10	250m	.10u	25	2.0				5.0 §	125	TO52
86	RTGC0120	2	200	200	250m	75A	10m	50m	1.0	50m	10	250m	100u	125	2.0	20u		100p	6.0	125A	TO18
87	2N4330	2	200	200	390m	75	3.0m	.50m	1.0	50m	10	250m	10u	25	2.0				5.0 §	100	TO52
88	RTGD0120	2	200	200	500m	75A	10m	1.0m	1.0	50m	10	250m	100u	125	2.5	20u		100p	15	125A	TO5
89	2N1689	2	200	200	1.0	25A	5.0m	1.0m	1.0	100m	10		50u	125A	2.0					125A	TO5
90	3GCREX	2	200	200	3.0	25B	50m	50m	3.0	100m	5.0		3.0u⊘	25	2.5	2.0u	40u		40	125J	S56
91	3GCREY	2	200	200	3.0	25B	50m	50m	3.0	200m	5.0		3.0u⊘	25	2.5	2.0u	40u		40	125J	S56
92	3GCREZ	2	200	200	3.0	25B	50m	50m	3.0	300m	5.0		3.0u⊘	25	2.5	2.0u	40u		40	125J	S56
93	2N4325	2	250	250	250m	75	3.0m	50m	1.0	50m	10	250m	10u	25	2.0				5.0 §	125	TO52
94	RTGC0125	2	250	250	250m	75A	10m	50m	1.0	50m	10	250m	100u	125	2.0	.20u		100p	6.0	125A	TO18
95	2N4331	2	250	250	390m	75	3.0m	50m	1.0	50m	10	250m	.10u	25	2.0				5.0 §	100	TO52
96	RTGD0125	2	250	250	500m	75A	10m	1.0m	1.0	50m	10	250m	100u	125	2.5	.20u		100p	15	125A	TO5
97	3GCRFX	2	250	250	3.0	25B	50m	50m	3.0	100m	5.0		2.5u⊘	25	2.5	2.0u	40u		40	125J	S56
98	3GCRFY	2	250	250	3.0	25B	50m	50m	3.0	200m	5.0		2.5u⊘	25	2.5	2.0u	40u		40	125J	S56
99	3GCRFZ	2	250	250	3.0	25B	50m	50m	3.0	300m	5.0		2.5u⊘	25	2.5	2.0u	40u		40	125J	S56
100	RTGC0130	2	300	300	250m	75A	10m	50m	1.0	50m	10	250m	100u	125	2.0	20u		100p	6.0	125A	TO18
101	RTGD0130	2	300	300	500m	75A	10m	1.0m	1.0	50m	10	250m	100u	125	2.5	.20u		100p	15	125A	TO5
102	3GCRGX	2	300	300	3.0	25B	50m	50m	3.0	100m	5.0		2.0u⊘	25	2.5	2.0u	40u		40	125J	S56
103	3GCRGY	2	300	300	3.0	25B	50m	50m	3.0	200m	5.0		2.0u⊘	25	2.5	2.0u	40u		40	125J	S56
104	3GCRGZ	2	300	300	3.0	25B	50m	50m	3.0	300m	5.0		2.0u⊘	25	2.5	2.0u	40u		40	125J	S56
105	3GCRHX	2	400	400	3.0	25B	50m	50m	3.0	100m	5.0		1.5u⊘	25	2.5	2.0u	40u		40	125J	S56
106	3GCRHY	2	400	400	3.0	25B	50m	50m	3.0	200m	5.0		1.5u⊘	25	2.5	2.0u	40u		40	125J	S56
107	3GCRHZ	2	400	400	3.0	25B	50m	50m	3.0	300m	5.0		1.5u⊘	25	2.5	2.0u	40u		40	125J	S56
108	3GCRIX	2	500	500	3.0	25B	50m	50m	3.0	100m	5.0		1.0u⊘	25	2.5	2.0u	40u		40	125J	S56
109	3GCRIY	2	500	500	3.0	25B	50m	50m	3.0	200m	5.0		1.0u⊘	25	2.5	2.0u	40u		40	125J	S56
110	3GCRIZ	2	500	500	3.0	25B	50m	50m	3.0	300m	5.0		1.0u⊘	25	2.5	2.0u	40u		40	125J	S56

SYMBOLS AND CODES EXPLAINED IN INTERPRETER

7. MISCELLANEOUS SILICON PNPN DEVICES

IN ORDER OF (1) USE, (2) MAX FWD BKOVER VOLT (3) MAX REV VOLT, (4) MAX CUR, (5) TYPE No.

LINE No.	5 TYPE No	1 USE	2 MAX. FWD. BKOVER VBO (V)	3 MAX. REV. PRV (V)	4 MAX CONT. CURRENT If (A)	at TEMP (°C)	MAX. HOLD CUR Ih @ 25°C (A)	MAX GATE ON-OFF RATINGS @ 25°C TURN-ON Igf (A)	Vgf (V)	TURN-OFF Igo (A)	Vgo (V)	Ic (A)	MAX. SAT. CURRENT Is at VBO (A)	at TEMP (°C)	MAX. FWD. VOLT. DROP (V)	SWITCHING TIME @25°C Ton (s)	Toff (s)	MIN dV/dt V/us	ABS. MAX. RATINGS PK SRG CUR. (A)	MAX TEMP (°C)	DWG. No.
1	3GCRJX	2	600	600	3 0	25B	50m	50m	3 0	100m	5.0		1.0uØ	25	2.5	2 0u	40u		40	125J	S56
2	3GCRJY	2	600	600	3.0	25B	50m	50m	3.0	200m	5.0		1.0uØ	25	2.5	2.0u	40u		40	125J	S56
3	3GCRJZ	2	600	600	3 0	25B	50m	50m	3 0	300m	5.0		1 0uØ	25	2 5	2 0u	40u		40	125J	S56
4#	BRY39	3		70	100m		1 0m									1 5uØ	15uØ			150J	TO72
5#	BRY46	3	20 Ø	15	50	85C	1 0m	200u	1 0		1.5	20m			1.4			100			M553
6▼#	BRY49	3	30	30	300m	25	1 0m	10u	800m						2 0	250n	5.0u		2 0 †		C41k
7#	BRY20	3	40	5 0	300m	25C	10m	30m	.70						1.5	10u	1.0u		1 0	125J	
8	3N84	3	40	40	175m	25A	2 0m	01m	65				20u	125A	1.9	1 5uØ				125J	L5
9	CL3Δ	3	60	60	450m	75	5.0m	.20m	.80				.20u	25	1.5				15	25	TO33
10	JAN3N81	3	65 *		200m	150J	1.5m	1 0u	650m						2.0	1.5u		50		150J	TO72
11	JAN3N86	3	65 *		200m	150J	200u	1 0u	650m						2.0	1.5u		50		150J	TO72
12	3N81	3	65	65	20	25A	1 5	1 0u	65				20u	150A	2.0	1.5uØ				150J	L5
13	3N86	3	65	65	.20	25A	20	1 0u	65				20u	150A	2.0	1 5uØ				150J	L5
14	3N83	3	70	70	50m	25A	4.0m	15m	.80				20u	125A	1.4	1 5uØ				125J	L5
15#	3SF11	3	70	70	50m	25A	1 0m	200u	1.0				10n	25	1.4		6.0u		500m	150J	L5
16▼#	BRY50	3	70	70	300m	25	1.0m	10u	800m						2.0	250n	5.0u		2.0 †		C41k
17	JAN3N82	3	100 *		200m	150J	1.5m	1 0u	650m						2 0	1 5u		50		150J	TO72
18	3N85	3	100	100	175m	25A	2.0m	01m	.65				20u	125A	1.9	1.5uØ				125J	L5
19	3N82	3	100	100	.20	25A	1 5	1 0u	.65				20u	150A	2.0	1.5uØ				150J	L5
20	CL2Δ	3	100	100	450m	75	5 0m	20m	.80				.20u	25	1.5				15	25	TO33
21▼#	BRY51	3	120	120	300m	25	1 0m	10u	800m						2.0	250n	5.0u		2.0 †		C41k
22	CL1Δ	3	200	200	450m	75	5 0m	.20m	.80				20u	25	1.5				15	25	TO33
23	3P1020	4	15		300m	50C	1.0m	.03m	.70	01m			5.0u	25	1.5					100	C16s
24	5P15	4	15		350m	75	20m	03m	60				10u	25	1.2				5.0	125	M237
25	RTPC0101	4	15	15	250m	75A	2 0m	.10m	.80				100u	100	1.5	20u		100p	6 0	100A	C16s
26	RTPC0201	4	15	15	250m	75A	2 0m	.10m	80				100u	125	1.5	20u		100p	6.0	125A	C16s
27	3P15	4	15	15	300m	50	1 0m	150mØ					5 0u	25	1.5				5 0	150	C16s
28	L8U	4	25	25	1.6	15C	.56m	22m	.80						1.4		40u	01p	15	100C	C16r
29	L9U	4	25	25	1 6	15C	.56m	22m	.80						1.4		40u	01p	15	100C	C16r
30	L811U	4	25	25	1 6	78C	560u	220u	800m						1 4		40u	10f	15	100C	M181
31	L911U	4	25	25	1 6	78C	56m	22m	80						1.4		40u	01p	15	100C	M181
32	3P1021	4	30		300m	50C	1 0m	03m	70	01m			5 0u	25	1.5					100	C16s
33	5P30	4	30		350m	75	20m	.03m	60				.10u	25	1.2				5.0	125	M237
34	RTPC0103	4	30	30	250m	75A	2 0m	10m	80				100u	100	1 5	20u		100p	6 0	100A	C16s
35	RTPC0203	4	30	30	250m	75A	2.0m	10m	.80				100u	125	1.5	.20u		100p	6.0	125A	C16s
36	3P30	4	30	30	300m	50	1 0m	150mØ					5.0u	25	1 5				5.0	150	C16s
37	PF30	4	30	30	300m	50	1 0m						25u	125	1 5				5 0	125	TO18
38	PF30A	4	30	30	300m	50	1 0m						25u	125	1 5				5 0	125	TO18
39	PR30	4	30	30	300m	50	1 0m						25u	125	1 5				5 0	125	TO18
40	PR30A	4	30	30	300m	50	1.0m						25u	125	1.5				5 0	125	TO18
41	L1V	4	40	40			2.0m	.01m							2 3						TO72
42	LASCS	4	40	40	175m	25	2 0m	.01m	.65						2 0	15u			2 0	125J	C41e
43	L8F	4	50	50	1 6	15C	56m	22m	80						1 4		40u	.02p	15	100C	C16r
44	L9F	4	50	50	1 6	15C	.56m	22m	80						1.4		40u	02p	15	100C	C16r
45	L811F	4	50	50	1 6	78C	.56m	.22m	.80						1 4		40u	.02p	15	100C	M181
46	L911F	4	50	50	1.6	78C	56m	.22m	.80						1.4		40u	.02p	15	100C	M181
47	3P1022	4	60		300m	50C	1 0m	.03m	70	.01m			5.0u	25	1 5					100	C16s
48	5P60	4	60		350m	75	.20m	.03m	60				.10u	25	1.2				5.0	125	M237
49	RTPC0106	4	60	60	250m	75A	2 0m	.10m	80				100u	100	1 5	.20u		100p	6 0	100A	C16s
50	RTPC0206	4	60	60	250m	75A	2.0m	.10m	.80				100u	125	1.5	20u		100p	6.0	125A	C16s
51	3P60	4	60	60	300m	50	1 0m	150mØ					5.0u	25	1 5				5 0	150	C16s
52	3P1023	4	100		300m	50C	1 0m	03m	70	01m			5.0u	25	1.5					100	C16s
53	5P100	4	100		350m	75	.20m	.03m	.60				.10u	25	1 2				5 0	125	M237
54	RTPC0110	4	100	100	250m	75A	2 0m	.10m	80				100u	100	1.5	20u		100p	6 0	100A	C16s
55	RTPC0210	4	100	100	250m	75A	2.0m	.10m	.80				100u	125	1.5	.20u		100p	6.0	125A	C16s
56	3P100	4	100	100	300m	50	1 0m	150mØ					5.0u	25	1.5				5.0	150	C16s
57	L8A	4	100	100	1 6	15C	.56m	.22m	.80						1 4		40u	05p	15	100C	C16r
58	L9A	4	100	100	1 6	15C	56m	.22m	.80						1.4		40u	.05p	15	100C	C16r
59	L811A	4	100	100	1 6	78C	56m	22m	.80						1 4		40u	.05p	15	100C	M181
60	L911A	4	100	100	1 6	78C	.56m	.22m	.80						1.4		40u	.05p	15	100C	M181
61	RTPC0115	4	150	150	250m	75A	2.0m	.10m	.80				100u	100	1 5	20u		100p	6.0	100A	C16s
62	RTPC0215	4	150	150	250m	75A	2 0m	10m	.80				100u	125	1 5	.20u		100p	6.0	125A	C16s
63	3P150	4	150	150	300m	50	1 0m	150mØ					5 0u	25	1 5				5.0	150	C16s
64	L8G	4	150	150	1.6	15C	56m	.22m	80						1.4		40u	.07p	15	100C	C16r
65	L9G	4	150	150	1 6	15C	.56m	22m	.80						1.4		40u	.07p	15	100C	C16r
66	L811G	4	150	150	1.6	78C	56m	.22m	.80						1 4		40u	.07p	15	100C	M181
67	L911G	4	150	150	1 6	78C	.56m	.22m	.80						1 4		40u	07p	15	100C	M181
68	RTPC0120	4	200	200	250m	75A	2.0m	10m	80				100u	100	1 5	20u		100p	6 0	100A	C16s
69	RTPC0220	4	200	200	250m	75A	2.0m	10m	80				100u	125	1.5	20u		100p	6.0	125A	C16s
70	3P200	4	200	200	300m	50	1.0m	150mØ					5 0u	25	1 5				5.0	150	C16s
71	L8B	4	200	200	1 6	15C	.56m	.22m	.80						1.4		40u	09p	15	100C	C16r
72	L9B	4	200	200	1.6	15C	.56m	.22m	.80						1 4		40u	.09p	15	100C	C16r
73	L811B	4	200	200	1 6	78C	56m	.22m	80						1.4		40u	.09p	15	100C	M181
74	L911B	4	200	200	1 6	78C	56m	.22m	80						1.4		40u	09p	15	100C	M181
75♦	1N3300A	5	19	30	200m		15m						1.0u	25A	1.5				50	175A	A31
76♦	1N3300	5	21	30	200m		15m						1.0u	25A	1 5				50	175A	A31
77	BDW26	5	30	30	1.0	25														150	DO7
78#	BR100	5	32		10m	25			5 0				100u	25						70A	A171c
79	ST2Ø	5	36																2.0		A1bb
80	BDW32	5	36	36	1 0	25														150	DO7
81	40583	5	37																	100J	DO26
82	BDW38	5	42	42	1 0	25														150	DO7
83	AA1Δ	6			25m	80													5.0	100	TO18
84	AA2Δ	6			25m	80													5.0	100	TO18
85	AA3Δ	6			25m	80													5.0	100	TO18
86	MBS4991	6			6 0	25	1 5m								1 7	1 0	30			125J	TO92
87	MBS4992	6			6 0	25	500u	100u	5 0						1.7	1 0	30			125J	TO92
88	Q5006	6			8 5	60C	20m	50m	3 0						1 6	3.0u		350	80 §	125J	C121
89	Q5006T	6			8 5	60C	20m	50m	3 0						1.6	3 0u		350	80 §	125J	C121
90	Q6006	6			8 5	60C	20m	50m	3 0						1 6	3 0u		350	80 §	125J	C121
91	Q6006T	6			8 5	60C	20m	50m	3 0						1.6	3 0u		350	80 §	125J	C121
92	Q7006	6			8.5	60C	20m	50m	3 0						1.6	3 0u		350	80 §	125J	C121
93	Q7006T	6			8 5	60C	20m	50m	3 0						1 6	3.0u		350	80 §	125J	C121
94	Q8006	6			8 5	60C	20m	50m	3.0						1.6	3 0u		350	80 §	125J	C121
95	Q8006T	6			8 5	60C	20m	50m	3 0						1 6	3 0u		350	80 §	125J	C121
96	Q2008	6			11	60C	35m	50m	3 0						1.6	3.0u		400	100 §	125J	C121
97	Q2008T	6			11	60C	35m	50m	3 0						1.6	3.0u		400	100 §	125J	C121
98	Q4008	6			11	60C	35m	50m	3 0						1.6	3 0u		400	100 §	125J	C121
99	Q4008T	6			11	60C	35m	50m	3.0						1 6	3 0u		400	100 §	125J	C121
100▼	2N6068	6		25	4 0	85C	70m$	60m§	2 5				2 0m	110C	2 0				30 §	110C	M386a
101▼	2N6069	6		50	4 0	85C	70m$	60m§	2.5				2 0m	110C	2 0				30 §	110C	M386a
102▼	HEPR1721-RT	6		50	8 0	100J	20m§Ø	30m	2.0		2.0	§							80 §	100	M386a
103▼	HEPR1750-RT	6		50	10	100J	20m§Ø	30m	2 0		2 0	§							80 §	100	S230a
104▼	HEPR1781-RT	6		50	25	100J	10m§Ø	20m	3 0		3 0	§							225 §	100	S131s
105♦	2N5754	6		100	2 5	70C	82m$	60m§	3 0				750u	100C	1 8			10	25 §	100C	C16g
106▼	2N6070	6		100	4 0	85C	70m$	60m§	2 5				2 0m	110C	2 0				30 §	110C	M386a
107▼	HEPR1722-RT	6		100	8 0	100J	20m§Ø	30m	2 0		2 0	§							80 §	100	M386a
108▼	HEPR1782-RT	6		100	25	100J	10m§Ø	20m	3 0		3.0	§							225 §	100	S131s
109♦	2N5755	6		200	2 5	70C	82m$	60m§	3 0				750u	100C	1 8			10	25 §	100C	C16g
110▼	2N6071	6		200	4 0	85C	70m$	60m§	2 5				2 0m	110C	2.0				30 §	110C	M386a

SYMBOLS AND CODES EXPLAINED IN INTERPRETER

7. MISCELLANEOUS SILICON PNPN DEVICES

IN ORDER OF (1) USE, (2) MAX FWD BKOVER VOLT (3) MAX REV VOLT, (4) MAX CUR, (5) TYPE No.

LINE No.	5 TYPE No.	1 USE	2 MAX. FWD. BKOVER VBO (V)	3 MAX. REV. PRV (V)	MAX CONT. CURRENT 4 If (A)	at TEMP (°C)	MAX. HOLD CUR Ih @ 25°C (A)	MAX GATE ON-OFF RATINGS @ 25°C TURN-ON Igf (A)	Vgf (V)	TURN-OFF Igo (A)	Vgo (V)	Ic (A)	MAX. SAT. CURRENT Is at VBO (A)	at TEMP (°C)	MAX. FWD. VOLT. DROP (V)	SWITCHING TIME @25°C Ton (s)	Toff (s)	MIN dV/dt V/us	ABS. MAX. RATINGS PK SRG CUR. (A)	MAX TEMP (°C)	DWG. No.
1▼	HEP340-RT	6		200	8.0	100J	20m§∅	50m	2.0		2.0	§							80 §	100	S230a
2▼	HEPR1723-RT	6		200	8.0	100J	20m§∅	30m	2.0		2.0	§							80 §	100	M386a
3♦	2N5567	6		200	10	85C	200m§	100m§	4.0				2.0m	100C	1.6			30	100 §	100C	M94f
4♦	2N5569	6		200	10	85C	200m§	100m§	4.0				2.0m	100C	1.6			30	100 §	100C	S131k
5▼	HEPR1751-RT	6		200	10	100J	20m§∅	30m	2.0		2.0	§							80 §	100	S230a
6♦	2N5571	6		200	15	85C	300m§	150m§	4.0				2.0m	100C	1.8			30	100 §	100C	M94f
7♦	2N5573	6		200	15	85C	300m§	150m§	4.0				2.0m	100C	1.8			30	100 §	100C	S131k
8▼	HEPR1783-RT	6		200	25	100J	10m§∅	20m	3.0		3.0	§							225 §	100	S131s
9♦	2N5441	6		200	40	70C	100m§	125m	3.4				4.0m	110C	1.8			50	300 §	110C	M94c
10♦	2N5444	6		200	40	65C	100m§	125m	3.4				4.0m	110C	1.8			50	300 §	110C	S131d
11▼	2N6072	6		300	4.0	85C	70m§	60m§	2.5				2.0m	110C	2.0				30 §	110C	M386a
12♦	2N5756	6		400	2.5	70C	82m§	60m§	3.0				750u	100C	1.8			10	25 §	100C	C16g
13▼	2N6073	6		400	4.0	85C	70m§	60m§	2.5				2.0m	110C	2.0				30 §	110C	M386a
14▼	HEPR1725-RT	6		400	8.0	100J	20m§∅	30m	2.0		2.0	§							80 §	100	M386a
15♦	2N5568	6		400	10	85C	200m§	100m§	4.0				2.0m	100C	1.6			20	100 §	100C	M94f
16♦	2N5570	6		400	10	85C	200m§	100m§	4.0				2.0m	100C	1.6			20	100 §	100C	S131k
17▼	HEPR1752-RT	6		400	10	100J	20m§∅	30m	2.0		2.0	§							80 §	100	S230a
18♦	2N5572	6		400	15	85C	300m§	150m§	4.0				2.0m	100C	1.8			20	100 §	100C	M94f
19♦	2N5574	6		400	15	85C	300m§	150m§	4.0				2.0m	100C	1.8			20	100 §	100C	S131k
20▼	HEPR1785-RT	6		400	25	100J	10m§∅	20m	3.0		3.0	§							225 §	100	S131s
21♦	2N5442	6		400	40	70C	100m§	125m	3.4				4.0m	110C	1.8			30	300 §	110C	M94c
22♦	2N5445	6		400	40	65C	100m§	125m	3.4				4.0m	110C	1.8			30	300 §	110C	S131d
23▼	2N6074	6		500	4.0	85C	70m§	60m§	2.5				2.0m	110C	2.0				30 §	110C	M386a
24♦	2N5757	6		600	2.5	70C	82m§	60m§	3.0				750u	100C	1.8			10	25 §	100C	C16g
25▼	2N6075	6		600	4.0	85C	70m§	60m§	2.5				2.0m	110C	2.0				30 §	110C	M386a
26♦	2N5443	6		600	40	70C	100m§	125m	3.4				4.0m	110C	1.8			20	300 §	110C	M94c
27♦	2N5446	6		600	40	65C	100m§	125m	3.4				4.0m	110C	1.8			20	300 §	110C	S131d
28	D13Q1	6	10		200m	25	1.5m						20u	100	1.8	1.0u			5.0	150J	TO98
29	D13P1	6	10	30	200m	25	1.5m						10u	100	1.8	1.0u	25u	2.5p∅	5.0	150J	TO98
30	2N1875	6	15	15	1.2	100C	3.0m	20u	600m						2.5				20	150C	TO9
31▼	MAC1-1	6	25	25	10	75	30m	40m	2.0						1.8	1.5u		5.0	100 △	100	C84
32▼	MAC2-1	6	25	25	10	75	30m	40m	2.0						1.8	1.5u		5.0	100 △	100	S230
33▼	MAC4-1	6	25	25	10	75	50m	50m	2.5						1.8	1.5u		5.0	100 △	100	C84
34▼	MAC5-1	6	25	25	10	75	50m	50m	2.5						1.8	1.5u		5.0	100 △	100	S230
35▼	MAC6-1	6	25	25	10	75	50m	50m	2.5						1.8	1.5u		5.0	100 △	100	C85
36	MAC36-1	6	25	25	25	67C	75m	100m	3.0				4.0	110J		1.0u		100 ∅	225 §	110J	S131k
37	MAC37-1	6	25	25	25	67C	75m	75m	3.0				4.0m	110J	1.5	1.0u		100	225 §	110J	M94h
38	MAC38-1	6	25	25	25	67C	75m	75m	3.0				4.0m	110J	1.5	1.0u		100	225 §	110J	S131m
39	D13T1	6	40	40	150m	25									1.5					150A	TO98
40	D13T2	6	40	40	150m	25									1.5					150A	TO98
41	SC35F	6	50		3.0	80C	50m	50m	3.0						2.3			2.0p	30 △	100J	S131
42	SC36F	6	50		3.0	80C	50m	50m	3.0						2.3			2.0p	30 △	100J	M94
43	TG30	6	50		3.0	75C	15m	10m	2.2				750u	100C	2.2	2.5u		10	30	100A	C16z
44	PF60	6	50		6.0	75C	50m	80m	2.5				2.0m	100C	2.2	2.5u		30	100	100A	M246a
45	SC40F	6	50		6.0	75C	50m	50m	3.0						1.8			2.0p	50	100J	S131
46	SC41F	6	50		6.0	75C	50m	50m	3.0						1.8			2.0p	50	100S	M94
47	SPF60	6	50		6.0	75C	50m	80m	2.5				2.0m	100C	2.2	2.5u		30	100	100A	S131p
48#	TRC6-050A	6	50		6.0	75C	50m	50m	3.0						1.8				50	100J	M94
49#	TRC6-050B	6	50		6.0	75C	50m	50m	3.0						1.8				50	100J	S131
50	SC45F	6	50		10	75C	50m	50m	3.0						1.7			2.0p	80	100J	S131
51	SC46F	6	50		10	75C	50m	50m	3.0						1.7			2.0p	80	100J	M94
52#	TRC10-050A	6	50		10	75C	50m	50m	3.0						1.7				80	100J	M94
53#	TRC10-050B	6	50		10	75C	50m	50m	3.0						1.7				80	100J	S131
54	SC50F	6	50		15	80C	50m	50m	3.0						1.7			2.0p	100	115J	S131
55	SC51F	6	50		15	80C	50m	50m	3.0						1.7			2.0p	100	115J	M94
56#	TRC15-050A	6	50		15	75C	50m	50m	3.0						1.7				100	100J	M94
57#	TRC15-050B	6	50		15	75C	50m	50m	3.0						1.7				100	100J	S131
58	BTD0105	6	50	50	1.0	75	25m	25m	2.0				3.0m	100	1.5	20u		10p	15	100C	TO5
59	BTD0205	6	50	50	3.0	75	50m	25m	2.0				3.0m	100	1.9	20u		10p	15	100C	TO5
60	BTR0205	6	50	50	3.0	75	50m	50m	3.0				3.0m	100	1.5	.20u		10p	40	100C	TO66
61	BTS0205	6	50	50	3.0	75	50m	50m	3.0				3.0m	100	1.5	20u		10p	40	100C	M94
62▼	BTD0305	6	50	50	6.0	80C	50	50	3.0				5.0m	100C	1.9	2.0u		10	100	100C	Z57
63	BTR0305	6	50	50	6.0	75	50m	50m	3.0				5.0m	100	1.9	.20u		10p	60	100C	TO66
64	BTS0305	6	50	50	6.0	75	50m	50m	3.0				5.0m	100	1.9	20u		10p	60	100C	M94
65	BTU0305	6	50	50	6.0	75	50m	50m	3.0				5.0m	100	1.9	20u		10p	60	100C	S131
66	BTR0405	6	50	50	10	75	50m	100m	3.0				5.0m	100	1.5	.20u		10p	100	100C	TO66
67	BTS0405	6	50	50	10	75	50m	100m	3.0				5.0m	100	1.5	20u		10p	100	100C	M94
68	BTU0405	6	50	50	10	75	50m	100m	3.0				5.0m	100	1.5	20u		10p	100	100C	S131
69	BTV0405	6	50	50	10	75	50m	100m	3.0				5.0m	100	155	20u		10p	100	100C	S291
70▼	MAC1-2	6	50	50	10	75	30m	40m	2.0						1.8	1.5u		5.0	100 △	100	C84
71▼	MAC2-2	6	50	50	10	75	30m	40m	2.0						1.8	1.5u		5.0	100 △	100	S230
72▼	MAC3-2	6	50	50	10	75	30m	40m	2.0						1.8	1.5u		5.0	100 △	100	C85
73▼	MAC4-2	6	50	50	10	75	50m	50m	2.5						1.8	1.5u		5.0	100 △	100	C84
74▼	MAC5-2	6	50	50	10	75	50m	50m	2.5						1.8	1.5u		5.0	100 △	100	S230
75▼	MAC6-2	6	50	50	10	75	50m	50m	2.5						1.8	1.5u		5.0	100 △	100	C85
76	BTS0505	6	50	50	15	75	50m	100m	3.0				5.0m	100	1.9	20u		10p	150	100C	M94
77	BTU0505	6	50	50	15	75	50m	100m	3.0				5.0m	100	1.9	20u		10p	150	100C	S131
78	BTU0605	6	50	50	25	75	100m	100m	3.0				5.0m	100	1.9	.20u		10p	200	100C	S131
79	MAC35-2	6	50	50	25	67C	75m	100m	3.0				4.0	110J		1.0u		100 ∅	225 §	110J	M94b
80	MAC36-2	6	50	50	25	67C	75m	100m	3.0				4.0	110J		1.0u		100 ∅	225 §	110J	S131k
81	MAC37-2	6	50	50	25	67C	75m	75m	3.0				4.0m	110J	1.5	1.0u		100	225 §	110J	M94h
82	MAC38-2	6	50	50	25	67C	75m	75m	3.0				4.0m	110J	1.5	1.0u		100	225 §	110J	S131m
83	2N1871	6	60	60	1.2	100C	5.0m	200u	800m						2.5				20	150C	TO9
84	SC35A	6	100		3.0	80C	50m	50m	3.0						2.3			2.0p	30 △	100J	S131
85	SC36A	6	100		3.0	80C	50m	50m	3.0						2.3			2.0p	30 △	100J	M94
86	TG31	6	100		3.0	75C	15m	10m	2.2				750u	100C	2.2	2.5u		10	30	100A	C16z
87▼#	TXC02A10	6	100		3.0	75C	80m	50m	3.0						1.5			50	50	125S	M478
88	GBS176D	6	100		6.0	80C	50m	50m	3.0				5.0m	125C	1.9				60 §	150C	TO64
89	PF61	6	100		6.0	75C	50m	80m	2.5				2.0m	100C	2.2	2.5u		30	100	100A	M246a
90	SC40A	6	100		6.0	75C	50m	50m	3.0						1.8			2.0p	50	100J	S131
91	SC41A	6	100		6.0	75C	50m	50m	3.0						1.8			2.0p	50	100J	M94
92	SPF61	6	100		6.0	75C	50m	80m	2.5				2.0m	100C	2.2	2.5u		30	100	100A	S131p
93#	TRC6-100A	6	100		6.0	75C	50m	50m	3.0						1.8				50	100J	M94
94#	TRC6-100B	6	100		6.0	75C	50m	50m	3.0						1.8				50	100J	S131
95▼#	TXC01A10	6	100		6.0	75C	80m	50m	3.0						1.6			50	50	125S	
96	SC45A	6	100		10	75C	50m	50m	3.0						1.7			2.0p	80	100J	S131
97	SC46A	6	100		10	75C	50m	50m	3.0						1.7			2.0p	80	100J	M94
98#	TRC10-100A	6	100		10	75C	50m	50m	3.0						1.7				80	100J	M94
99#	TRC10-100B	6	100		10	75C	50m	50m	3.0						1.7				80	100J	S131
100	SC50A	6	100		15	80C	50m	50m	3.0						1.7			2.0p	100	115J	S131
101	SC51A	6	100		15	80C	50m	50m	3.0						1.7			2.0p	100	115J	M94
102#	TRC15-100A	6	100		15	75C	50m	50m	3.0						1.7				100	100J	M94
103#	TRC15-100B	6	100		15	75C	50m	50m	3.0						1.7				100	100J	S131
104	2N3269	6	100	100	200u	150A	2.0m									3.0u∅	22u∅		60	150A	TO59
105#	TAG302-100	6	100 ∅	100	2.0m	70C	3.0m∅	25m	2.0				1.0m	105	1.7				25	105	TO5
106	BTD0110	6	100	100	1.0	75	25m	25m	2.0				3.0m	100	1.5	20u		10p	15	100C	TO5
107♦	40525	6	100	100	2.5	60C	5.0m	3.0m	2.2				750m	90J	2.2			5.0	25	90C	C16ab
108♦	40528	6	100	100	2.5	70C	15m	10m	2.2				750m	100J	2.2			10	25	100C	C16ab
109♦	40531	6	100	100	2.5	60C	5.0m	3.0m	2.2				750m	90J	2.2			5.0	25	90C	M466a
110♦	40534	6	100	100	2.5	70C	15m	10m	2.2				750m	100J	2.2			10	25	100C	M466a

SYMBOLS AND CODES EXPLAINED IN INTERPRETER

7. MISCELLANEOUS SILICON PNPN DEVICES

IN ORDER OF (1) USE, (2) MAX FWD BKOVER VOLT (3) MAX REV VOLT, (4) MAX CUR, (5) TYPE No.

LINE No	5 TYPE No.	1 USE	2 MAX. FWD. BKOVER VBO (V)	3 MAX. REV. PRV (V)	MAX CONT. CURRENT 4 If (A)	at TEMP (°C)	MAX. HOLD CUR Ih @ 25°C (A)	MAX GATE ON-OFF RATINGS @ 25°C TURN-ON Igf (A)	Vgf (V)	TURN-OFF Igo (A)	Vgo (V)	Ic (A)	MAX. SAT. CURRENT Is at VBO (A)	at TEMP (°C)	MAX. FWD. VOLT. DROP (V)	SWITCHING TIME @25°C Ton (s)	Toff (s)	MIN dV/dt V/us	ABS. MAX. RATINGS PK SRG CUR. (A)	MAX TEMP (°C)	DWG. No.
1	40684	6	100	100	2.5	70C	35m	25m	2.2						2 6			10	25	100C	M466
2	40693	6	100	100	2 5	70C	6.0m	45m	1.5											85A	M395
3	40696	6	100	100	2.5	70C	6.0m	45m	1.5											85A	TO5
4	BTD0210	6	100	100	3.0	75	50m	25m	2 0				3.0m	100	1.9	20u		10p	15	100C	TO5
5	BTR0210	6	100	100	3 0	75	50m	50m	3.0				3 0m	100	1 5	.20u		10p	40	100C	TO66
6	BTS0210	6	100	100	3 0	75	50m	50m	3.0				3.0m	100	1 5	.20u		10p	40	100C	M94
7#	2SM11	6	100	100	5	80C	40m	75m	3.0				3m	100J	1.8				45	100J	M365
8▼	BTD0310	6	100	100	6 0	80C	50	50	3.0				5.0m	100C	1 9	2.0u		10	100	100C	Z57
9	BTR0310	6	100	100	6 0	75	50m	50m	3.0				5.0m	100	1.9	20u		10p	60	100C	TO66
10	BTS0310	6	100	100	6 0	75	50m	50m	3.0				5.0m	100	1.9	.20u		10p	60	100C	M94
11	BTU0310	6	100	100	6 0	75	50m	50m	3.0				5.0m	100	1 9	.20u		10p	60	100C	S131
12#	2SM20	6	100	100	10	75C	40m	75m	3.0				3m	100J	1 4				70	100J	M365
13▼#	2SM63	6	100	100	10	75C		30m	3.0				3.0m	100J	1.3			10	80 △	100J	M591
14▼#	2SM67	6	100	100	10	75C		30m	3.0				3.0m	100J	1.3			10	80 △	100J	M592
15▼#	2SM71	6	100	100	10	75C		30m	3.0				3.0m	100J	1.3			10	80 △	100J	S350a
16#	BCR10A2	6	100	100	10	75C		30m	3.0				3.0m	100J	1.3			6.0	80	100J	M245b
17#	BCR10B2	6	100	100	10	75C		30m	3 0				3.0m	100J	1.3			6 0	80	100J	M480
18#	BCR10C2	6	100	100	10	75C		30m	3.0				3.0m	100J	1.3			6 0	80	100J	S94b
19	BTR0410	6	100	100	10	75	50m	100m	3 0				5.0m	100	1.5	20u		10p	100	100C	TO66
20	BTS0410	6	100	100	10	75	50m	100m	3 0				5.0m	100	1.5	20u		10p	100	100C	M94
21	BTU0410	6	100	100	10	75	50m	100m	3.0				5.0m	100	1.5	20u		10p	100	100C	S131
22	BTV0410	6	100	100	10	75	50m	100m	3.0				5.0m	100	155	20u		10p	100	100C	S291
23▼	MAC1-3	6	100	100	10	75	30m	40m	2.0						1.8	1 5u		5 0	100 △	100	C84
24▼	MAC2-3	6	100	100	10	75	30m	40m	2 0						1.8	1 5u		5.0	100 △	100	S230
25▼	MAC3-3	6	100	100	10	75	30m	40m	2.0						1.8	1 5u		5 0	100 △	100	C85
26▼	MAC4-3	6	100	100	10	75	50m	50m	2.5						1.8	1 5u		5 0	100 △	100	C84
27▼	MAC5-3	6	100	100	10	75	50m	50m	2 5						1.8	1 5u		5 0	100 △	100	S230
28▼	MAC6-3	6	100	100	10	75	50m	50m	2 5						1.8	1 5u		5 0	100 △	100	C85
29	BTS0510	6	100	100	15	75	50m	100m	3 0				5.0m	100	1.9	.20u		10p	150	100C	M94
30	BTU0510	6	100	100	15	75	50m	100m	3 0				5.0m	100	1.9	20u		10p	150	100C	S131
31	BTU0610	6	100	100	25	75	100m	100m	3.0				5.0m	100	1.9	.20u		10p	200	100C	S131
32#	BTX94-100	6	100	100	25	85C		100m	3 0				8.0m	125J	2.3			100	200 §	125J	TO48
33	MAC35-3	6	100	100	25	67C	75m	100m	3 0				4.0	110J		1.0u		100 ∅	225 §	110J	M94b
34	MAC36-3	6	100	100	25	67C	75m	100m	3 0				4.0	110J		1.0u		100 ∅	225 §	110J	S131k
35	MAC37-3	6	100	100	25	67C	75m	75m	3 0				4.0m	110J	1.5	1 0u		100	225 §	110J	M94h
36	MAC38-3	6	100	100	25	67C	75m	75m	3 0				4 0m	110J	1.5	1.0u		100	225 §	110J	S131m
37#	M9213-100	6	100	100	80	105C	100m	200m	3.0				10m	125J	2.0				1.2k	125J	S267
38#	SM80B11	6	100	100	80	105C	80m	150m	3.0				10m	125J	2.0				1.2k	125J	S91b
39	2N1873	6	150	150	1 2	100C	5 0m	200u	800m						2.5				20	150C	TO9
40	2N1873A	6	150	150	1 2	100C	5 0m	200u	800m						2.5				20	150C	TO9
41	PIC110	6	175 △	175	.80	100C	3 0m	5 0m	1 0				200u	100A	3.0			35	15	100A	L11
42	JAN2N5806	6	190 *		25	80C	100m	120m	4.0			§			1.6			20	200	125S	
43	EL20	6	200		25m	80A		25m		3.0m	5 0								500m	100A	TO18
44	EL20A	6	200		25m	80A		25m		3 0m	5 0								500m	100A	TO46
45	EL200	6	200		25m	80A		25m		3 0m	5.0								500m	100A	C134
46	EL200G	6	200		25m	80A		25m		3 0m	5.0								500m	100A	C134a
47	40769	6	200		500m	90C	15m	10m	2 2				750u	100J	2 2			10	50	150S	C16g
48	40771	6	200		500m	90C	30m	25m	2.2				750u	100J	2.2			10	50	150S	C16g
49	A03001	6	200		1 6	125A	4.0m	10m	3 0						1 6	2.0u		200	20 §	125J	M506
50	A03002	6	200		1 6	125A	10m	25m	3 0						1 6	3 0u		300	20 §	125J	M506
51	A03021	6	200		1 6	125A	4.0m	10m	3.0						1.6	2.0u		200	20 §	125J	M506
52	A03022	6	200		1 6	125A	10m	25m	3.0						1 6	3.0u		300	20 §	125J	M506
53	MQ42G1	6	200		1 6	80C	3 0m∅	50m	3 0						1.6				20 §		M508a
54	MQ42S1	6	200		1 6	80C	2.0m∅	10m	3.0						1 6				20 §		M508a
55	MQ42T1	6	200		1 6	80C	3 0m∅		3.0						1.6						M508a
56	MQ52G1	6	200		1 6	80C	3.0m∅	50m	3 0						1 6				20 §		M508b
57	MQ52S1	6	200		1 6	80C	2 0m∅	10m	3.0						1 6				20 §		M508b
58	MQ52T1	6	200		1 6	80C	3.0m∅		3.0						1.6				20 §		M508b
59	MQ62G1	6	200		1 6	80C	3 0m∅	50m	3.0						1.6				20 §		M508
60	MQ62S1	6	200		1.6	80C	2.0m∅	10m	3.0						1.6				20 §		M508
61	MQ62T1	6	200		1 6	80C	3.0m∅		3 0						1.6				20 §		M508
62	Q2001M1	6	200		2 3	60C	10m	50m	3.0						1.6	3.0u		300	20 §	125J	C92a
63	Q2001M2	6	200		2 3	60C	10m	50m	3 0						1.6	3 0u		300	20 §	125J	C16h
64	Q2001MS1	6	200		2 3	60C	4.0m	10m	3.0						1 6	2.0u		200	20 §	125J	C92a
65	Q2001MS2	6	200		2.3	60C	4.0m	10m	3 0						1 6	2.0u		200	20 §	125J	C16h
66	Q2001MST1	6	200		2 3	60C	4 0m	10m	3 0						1.6	2.0u		200	20 §	125J	C92a
67	Q2001MST2	6	200		2.3	60C	4 0m	10m	3 0						1.6	2.0u		200	20 §	125J	C16h
68	Q2001MT1	6	200		2 3	60C	10m	50m	3 0						1 6	3.0u		300	20 §	125J	C92a
69	Q2001MT2	6	200		2.3	60C	10m	50m	3.0						1.6	3.0u		300	20 §	125J	C16h
70	Q2001P	6	200		2 3	60C	10m	50m	3 0						1.6	3.0u		300	20 §	125J	C118
71	Q2001PS	6	200		2.3	60C	4.0m	10m	3.0						1.6	2.0u		200	20 §	125J	C118
72	Q2001PST	6	200		2 3	60C	4 0m	10m	3 0						1.6	2.0u		200	20 §	125J	C118
73	Q2001PT	6	200		2.3	60C	10m	50m	3 0						1 6	3.0u		300	20 §	125J	C118
74	40691	6	200		2.5	60C	5 0m	4 0m	2 2				750u	90	2.2			5 0p	25	100C	TO5
75	40761	6	200		2 5	60C	5.0m	4.0m	2.2				750u	90	2.2			5.0p	25	100C	M395
76	40773	6	200		2 5	90C	30m	25m	2 2				4.0m	100J	2.2			30	200	150S	C110
77	SC35B	6	200		3 0	80C	50m	50m	3 0						2.3			2.0p	30 △	100J	S131
78	SC36B	6	200		3 0	80C	50m	50m	3.0						2.3			2.0p	30 △	100J	M94
79	TG32	6	200		3 0	75C	15m	10m	2.2				750u	100C	2 2	2.5u		10	30	100A	C16z
80▼#	TXC02A20	6	200		3.0	75C	80m	50m	3 0						1 5			50	50	125S	M478
81	A01001	6	200		4.3	60C	4.0m	10m	3 0						1.6	2.0u		200	20 §	125J	M507
82	A01002	6	200		4 3	60C	10m	25m	3 0						1.6	3.0u		300	20 §	125J	M507
83	A01011	6	200		4 3	60C	4.0m	10m	3.0						1.6	2.0u		200	20 §	125J	M507
84	A01012	6	200		4 3	60C	10m	25m	3.0						1.6	3.0u		300	20 §	125J	M507
85	Q2003P	6	200		4 3	60C	20m	50m	3.0						1.6	3.0u		300	60 §	125J	C118a
86	Q2003PT	6	200		4.3	60C	20m	50m	3.0						1 6	3.0u		300	60 §	125J	C118a
87	40509	6	200		5.5	25A	30m	25m	2.5						2 2	2 2u		3.0	100	100C	M395
88	Q2004	6	200		5 7	60C	20m	50m	3 0						1 6	3.0u		300	60 §	125J	C121
89	Q2004A	6	200		5.7	60C	20m	50m	3.0						1.6	3.0u		300	60 §	125J	C120
90	Q2004B	6	200		5 7	60C	20m	50m	3 0						1.6	3.0u		300	60 §	125J	S307
91	Q2004T	6	200		5 7	60C	20m	50m	3.0						1 6	3 0u		300	60 §	125J	C121
92	Q2004TA	6	200		5.7	60C	20m	50m	3 0						1.6	3.0u		300	60 §	125J	C120
93	Q2004TB	6	200		5 7	60C	20m	50m	3.0						1.6	3.0u		300	60 §	125J	S307
94	40429	6	200		6 0	75C	30m	25m	2.2				4.0m	100C	2 2	2 2u		5.0p	80	100C	TO66
95	40431	6	200		6 0	75	30m	.22m	40				2.0m	100C	2 3	2.2u		5.0p	100	100C	Z57
96	40485	6	200		6 0	75C	30m	25m	2.2				2.0m	100C	2.3	2 2u		5.0p	100	100C	Z57
97	40502	6	200		6.0	75C	30m	25m	2.2				2.0m	100C	2.2	2 2u		5.0p	80	100C	M394
98	40511	6	200		6 0	75C	30m	.22m	40				2 0m	100C	2.3	2.2u		5.0p	100	100C	M395
99	40638	6	200		6 0	58C	30m	25m	2.2						2.3	2.2u		3.0	100	100C	M457
100	40775	6	200		6 0	90C	75m	50m	2.5				2 0m	100J	1.8			30	200	150S	M94f
101	40777	6	200		6 0	90C	75m	50m	2 5				2.0m	100J	1 8			30	200	150S	S131k
102	GBS276D	6	200		6.0	80C	50m	50m	3.0				5.0m	125C	1.9				60 §	150C	TO64
103	PF62	6	200		6 0	75C	50m	80m	2 5				2.0m	100C	2.2	2 5u		30	100	100A	M246a
104	S206△	6	200		6 0	70C		1 0				§							100 §	100A	M94
105	S206S	6	200		6 0	70C		1 0				§							100 §	100A	S131
106	SC40B2	6	200		6 0		50m	50m	2 5						1.8			20	74	125S	S330
107	SC40B12	6	200		6 0		50m	50m	2.5						1.8			20	74	125S	S131n
108	SC40B13	6	200		6 0		50m	25m	2.0						1.8			20	74	125S	S131n
109	SC40B14	6	200		6.0		50m	50m	2 5						1.8			20	173	125S	S131n
110	SC40B22	6	200		6 0		50m	50m	2 5						1.8			20	74	125S	S330

SYMBOLS AND CODES EXPLAINED IN INTERPRETER

7. MISCELLANEOUS SILICON PNPN DEVICES

IN ORDER OF (1) USE, (2) MAX FWD BKOVER VOLT (3) MAX REV VOLT, (4) MAX CUR, (5) TYPE No.

LINE No.	5 TYPE No.	1 USE	2 MAX. FWD. BKOVER VBO (V)	3 MAX. REV. PRV (V)	MAX CONT. CURRENT 4 If (A)	at TEMP (°C)	MAX. HOLD CUR Ih @ 25°C (A)	MAX GATE ON-OFF RATINGS @ 25°C TURN-ON Igf (A)	Vgf (V)	TURN-OFF Igo (A)	Vgo (V)	Ic (A)	MAX. SAT. CURRENT Is at VBO (A)	at TEMP (°C)	MAX. FWD. VOLT. DROP (V)	SWITCHING TIME @25°C Ton (s)	Toff (s)	MIN dV/dt V/us	ABS. MAX. RATINGS PK SRG CUR. (A)	MAX TEMP (°C)	DWG. No.
1	SC40B23	6	200		6 0		50m	25m	2 0						1.8			20	74	125S	S330
2	SC40B24	6	200		6 0		50m	50m	2 5						1 8			20	173	125S	S330
3	SC40B	6	200		6.0		50m	50m	2 5						1 8			20	74	125S	S131n
4	SC41B12	6	200		6 0		50m	50m	2 5						1.8			20	74	125S	M94d
5	SC41B13	6	200		6 0		50m	25m	2.0						1 8			20	74	125S	M94d
6	SC41B14	6	200		6 0		50m	50m	2 5						1.8			20	173	125S	M94d
7	SC41B	6	200		6 0		50m	50m	2.5						1 8			20	74	125S	M94d
8	SPF62	6	200		6 0	75C	50m	80m	2 5				2 0m	100C	2 2	2 5u		30	100	100A	S131p
9#	TRC6-200A	6	200		6 0	75C	50m	50m							1.8				50	100J	M94
10#	TRC6-200B	6	200		6 0	75C	50m	50m							1 8				50	100J	S131
11▼#	TXC01A20	6	200		6 0	75C	80m	50m	3 0						1.6			50	50	125S	
12	A01021	6	200		6 4	60C	20m	25m	3.0						1.6	3 0u		300	60 §	125J	M507
13	A01041	6	200		6 4	60C	20m	25m	3 0						1.6	3 0u		300	60 §	125J	M507
14	Q2006	6	200		8.5	60C	20m	50m	3 0						1.6	3 0u		350	80 §	125J	C121
15	Q2006A	6	200		8 5	60C	20m	50m	3.0						1 6	3 0u		350	80 §	125J	C120
16	Q2006B	6	200		8 5	60C	20m	50m	3 0						1 6	3 0u		350	80 §	125	S307
17	Q2006T	6	200		8 5	60C	20m	50m	3 0						1 6	3 0u		350	80 §	125J	C121
18	Q2006TA	6	200		8 5	60C	20m	50m	3.0						1.6	3 0u		350	80 §	125J	C120
19	Q2006TB	6	200		8 5	60C	20m	50m	3 0						1.6	3 0u		350	80 §	125	S307
20	A01061	6	200		9 2	60C	20m	25m	3 0						1 6	3.0u		350	80 §	125J	M507
21	A01081	6	200		9 2	60C	20m	25m	3.0						1.6	3 0u		350	80 §	125J	M507
22	40779	6	200		10	85C	75m	50m	2 5				2 0m	100J	1 8			30	200	150S	M94f
23	40781	6	200		10	85C	75m	50m	2.5				2 0m	100J	1 8			30	200	150S	S131k
24	S210△	6	200		10	70C		4 0				§							100 §	100A	M94
25	S210S	6	200		10	70C		4 0				§							100 §	100A	S131
26	SC45B2	6	200		10		50m	50m	2 5						1 6			20	90	125S	S330
27	SC45B12	6	200		10		50m	50m	2 5						1 6			20	90	125S	S131n
28	SC45B13	6	200		10		50m	25m	2 0						1.6			20	90	125S	S131n
29	SC45B14	6	200		10		50m	50m	2 5						1 6			20	187	125S	S131n
30	SC45B22	6	200		10		50m	50m	2 5						1 6			20	90	125S	S330
31	SC45B23	6	200		10		50m	25m	2 0						1.6			20	90	125S	S330
32	SC45B24	6	200		10		50m	50m	2.5						1 6			20	187	125S	S330
33	SC45B	6	200		10		50m	50m	2 5						1 6			20	90	125S	S131n
34	SC46B12	6	200		10		50m	50m	2.5						1 6			20	90	125S	M94d
35	SC46B13	6	200		10		50m	25m	2 0						1.6			20	90	125S	M94d
36	SC46B14	6	200		10		50m	50m	2.5						1 6			20	187	125S	M94d
37	SC46B	6	200		10		50m	50m	2 5						1.6			20	90	125S	M94d
38#	TRC10-200A	6	200		10	75C	50m	50m							1 7				80	100J	M94
39#	TRC10-200B	6	200		10	75C	50m	50m							1 7				80	100J	S131
40▼#	TXD99A20	6	200		10	75C	50m	50m	2 5						1 6			20	90	125S	M94d
41	Q2008A	6	200		11	60C	35m	50m	3 0						1 6	3 0u		400	100 §	125J	C120
42	Q2008B	6	200		11	60C	35m	50m	3 0						1 6	3 0u		400	100 §	125J	S307
43	Q2008TA	6	200		11	60C	35m	50m	3.0						1 6	3 0u		400	100 §	125J	C120
44	Q2008TB	6	200		11	60C	35m	50m	3 0						1 6	3 0u		400	100 §	125J	S307
45	A01101	6	200		12	60C	35m	25m	3 0						1 6	3 0u		400	100 §	125J	M507
46	A01121	6	200		12	60C	35m	25m	3 0						1 6	3 0u		400	100 §	125J	M507
47	A01141	6	200		14	60C	35m	25m	3 0						1.6	3 0u		400	110 §	125J	M507
48	A01161	6	200		14	60C	35m	25m	3.0						1.6	3 0u		400	110 §	125J	M507
49	Q2010	6	200		14	60C	35m	50m	3 0						1 6	3 0u		400	110 §	125J	C121
50	Q2010A	6	200		14	60C	35m	50m	3 0						1 6	3 0u		400	110 §	125J	C120
51	Q2010B	6	200		14	60C	35m	50m	3 0						1 6	3 0u		400	110 §	125J	S307
52	Q2010T	6	200		14	60C	35m	50m	3 0						1 6	3 0u		400	110 §	125J	C121
53	Q2010TA	6	200		14	60C	35m	50m	3 0						1 6	3 0u		400	110 §	125J	C120
54	Q2010TB	6	200		14	60C	35m	50m	3 0						1 6	3 0u		400	110 §	125J	S307
55	40575	6	200		15	70C	60m	80m	2 5						2 0	3 0u		10p	100	100C	TO66
56	40783	6	200		15	80C	75m	50m	2 5				2 0m	100J	1.8			30	200	150S	M94f
57	40785	6	200		15	80C	75m	50m	2 5				2 0m	100J	1 8			30	200	150S	S131k
58	S215	6	200		15	70C		4 0				§							100 §	100A	M94
59	S215S	6	200		15	70C		4 0				§							100 §	100A	S131
60	SC50B2	6	200		15		50m	50m	2 5						1 6			20	90	125S	S330
61	SC50B12	6	200		15		50m	50m	2 5						1 6			20	90	125S	S131n
62	SC50B13	6	200		15		50m	25m	2 0						1 6			20	90	125S	S131n
63	SC50B14	6	200		15		50m	50m	2 5						1 6			20	187	125S	S131n
64	SC50B22	6	200		15		50m	50m	2 5						1 6			20	90	125S	S330
65	SC50B23	6	200		15		50m	25m	2 0						1 6			20	90	125S	S330
66	SC50B24	6	200		15		50m	50m	2 5						1 6			20	187	125S	S330
67	SC50B	6	200		15		50m	50m	2 5						1 6			20	90	125S	S131n
68	SC51B12	6	200		15		50m	50m	2 5						1.6			20	90	125S	M94d
69	SC51B13	6	200		15		50m	25m	2 0						1 6			20	90	125S	M94d
70	SC51B14	6	200		15		50m	50m	2 5						1 6			20	187	125S	M94d
71	SC51B	6	200		15		50m	50m	2 5						1 6			20	90	125S	M94d
72#	TRC15-200A	6	200		15	75C	50m	50m							1 7				100	100J	M94
73#	TRC15-200B	6	200		15	75C	50m	50m							1 7				100	100J	S131
74▼#	TXD98A20	6	200		15	80C	50m	50m	2 5						1 6			20	90	125S	M94d
75	TIC250B	6	200		20	70		100m	3 0				4 0m	110	2 0			5 0	200	70	M94c
76	TIC252B	6	200		20	70		100m	3 0				4 0m	110	2 0			5.0	200	70	S131d
77	Q2015	6	200		21	60C	35m	50m	3 0						1 6	4 0u		450	150 §	125J	C121
78	Q2015A	6	200		21	60C	35m	50m	3 0						1 6	4 0u		450	150 §	125J	C120
79	Q2015B	6	200		21	60C	35m	50m	3 0						1 6	4 0u		450	150 §	125J	S307
80	Q2015T	6	200		21	60C	35m	50m	3 0						1 6	4 0u		450	150 §	125J	C121
81	Q2015TA	6	200		21	60C	35m	50m	3 0						1.6	4 0u		450	150 §	125J	C120
82	Q2015TB	6	200		21	60C	35m	50m	3.0						1 6	4 0u		450	150 §	125J	S307
83	A01181	6	200		22	60C	35m	50m	3 0						1 6	4 0u		450	150 §	125J	M507
84	A01201	6	200		22	60C	35m	50m	3 0						1 6	4 0u		450	150 §	125J	M507
85	Q2025	6	200		25	80C	35m	80m	3 0						1 6	4 0u		450	230 §	125J	M505
86	Q2025C	6	200		25	80C	35m	80m	3 0						1 6	4 0u		450	230 §	125J	M504
87	Q2025D	6	200		25	80C	35m	80m	3 0						1 6	4 0u		450	230 §	125J	S308
88	S225	6	200		25	70C		4.0				§							250 §	100A	M94
89	S225S	6	200		25	70C		4 0				§							250 §	100A	S131
90	SC60B	6	200		25	80C	100m	50m	2 5						1.4			5 0	250	115J	S131e
91	SC61B	6	200		25	80C	100m	50m	2 5						1 4			5.0	250	115J	S131f
92	TIC260B	6	200		25	70		100m	3 0				4 0m	110	1 7			5 0	250	70	M94c
93	TIC262B	6	200		25	70		100m	3 0				4 0m	110	1 7			5 0	250	70	S131d
94▼#	TXE99A20	6	200		25	80C	100m	50m	2.5						1 4			5 0	250	115J	S131f
95	TIC270B	6	200		40	70		100m	3 0				4 0m	110	1 7			5 0	400	70	M94c
96	TIC272B	6	200		40	70		100m	3 0				4.0m	110	1.7			5 0	400	70	S131d
97	Q2040PF	6	200		57	60C	35m	100m	3 0						1 6	5 0u		500	300 §	125J	M505
98	Q2040PFC	6	200		57	60C	35m	100m	3 0						1 6	5 0u		500	300 §	125J	M504
99	Q2040PFD	6	200		57	60C	35m	100m	3 0						1.6	5 0u		500	300 §	125J	S308
100	2N3270	6	200	200	200u	150A	2 0m									3 0u∅	22u∅		60	150A	TO59
101#	TAG302-200	6	200 ∅	200	2 0m	70C	3.0m∅	25m	2 0				1.0m	105	1 7				25	105	TO5
102#	TAG306-200	6	200 ∅	200	6 0m	70C	50m	50m	4 0				1 5m	105	1 7				60	105	TO66
103#	TAG307-200	6	200 ∅	200	6 0m	70C	50m	50m	4 0				1 5m	105	1.7				60	105	TO48
104	PIC100	6	200 △	200	80	100C	1 5m	2 0m	1 0				200u	150A	2.5			50	15	150A	L11
105	PIC101	6	200 △	200	80	100C	3.0m	5 0m	1 0				200u	150A	2 5			45	15	150A	L11
106	BTD0120	6	200	200	1 0	75	25m	25m	2 0				3.0m	100	1 5	20u		10p	15	100C	TO5
107#	TDAL110	6	200 △	200	1 0	25A		50m	3 0				1 0m	100J	2 0				20		C16e
108	2N1874	6	200	200	1 2	100C	5 0m	200u	800m						2 5				20	150C	TO9
109#	2SM79	6	200	200	2 0	73C	3 0m∅	30m	2 6				1 0m	100J	1 6			20	50	100J	TO66
110#	AC02BT	6	200	200	2	70		75m	2 0				1 0m	100J	2.2				15	100J	C16y

SYMBOLS AND CODES EXPLAINED IN INTERPRETER

7. MISCELLANEOUS SILICON PNPN DEVICES

IN ORDER OF (1) USE, (2) MAX FWD BKOVER VOLT (3) MAX REV VOLT, (4) MAX CUR, (5) TYPE No.

LINE No	5 TYPE No	1 USE	2 MAX. FWD. BKOVER VBO (V)	3 MAX. REV. PRV (V)	MAX CONT. CURRENT 4 If (A)	MAX CONT. CURRENT at TEMP (°C)	MAX. HOLD CUR Ih @ 25°C (A)	MAX GATE ON-OFF RATINGS @ 25°C TURN-ON Igf (A)	TURN-ON Vgf (V)	TURN-OFF Igo (A)	TURN-OFF Vgo (V)	Ic (A)	MAX. SAT. CURRENT Is at VBO (A)	MAX. SAT. CURRENT at TEMP (°C)	MAX. FWD. VOLT. DROP (V)	SWITCHING TIME @25°C Ton (s)	SWITCHING TIME @25°C Toff (s)	MIN dV/dt V/us	ABS. MAX. RATINGS PK SRG CUR. (A)	ABS. MAX. RATINGS MAX TEMP (°C)	DWG. No.
1#	AC02BTR	6	200	200	2	70		75m	2.0				1 0m	100J	2.2				15	100J	C133
2	40731	6	200	200	2 3	75C	15m	45m	1 5											85A	M395
3♦	40526	6	200	200	2 5	60C	5 0m	3 0m	2.2				750m	90J	2 2			5 0	25	90C	C16ab
4♦	40529	6	200	200	2 5	70C	15m	10m	2 2				750m	100J	2.2			10	25	100C	C16ab
5♦	40532	6	200	200	2 5	60C	5 0m	3 0m	2.2				750m	90J	2 2			5.0	25	90C	M466a
6♦	40535	6	200	200	2 5	70C	15m	10m	2 2				750m	100J	2 2			10	25	100C	M466a
7	40685	6	200	200	2 5	70C	35m	25m	2 2						2 6			10	25	100C	M466
8	40694	6	200	200	2.5	70C	6.0m	45m	1 5											85A	M395
9	40697	6	200	200	2 5	70C	6.0m	45m	1.5											85A	TO5
10	BTD0220	6	200	200	3 0	75	50m	25m	2.0				3 0m	100	1.9	.20u		10p	15	100C	TO5
11	BTR0220	6	200	200	3 0	75	50m	50m	3 0				3 0m	100	1 5	20u		10p	40	100C	TO66
12	BTS0220	6	200	200	3 0	75	50m	50m	3 0				3.0m	100	1 5	.20u		10p	40	100C	M94
13#	TMAL110	6	200 △	200	3 0	25A		100m	3 0				3 0m	100J	2.2				40		S141d
14	40733	6	200	200	4 2	75C	15m	45m	1.5											85A	M457
15#	2SM12	6	200	200	5	80C	40m	75m	3.0				3m	100J	1 8				45	100J	M365
16#	2SM75	6	200	200	6.0	75C	6.0m∅	50m	3.0				2.0m	125J	1 8			20	50	100J	TO3
17	40725	6	200	200	6 0	75C	15m	45m	1 5											85A	TO5
18	40727	6	200	200	6 0	75C	15m	45m	1.5											85A	TO66
19	40729	6	200	200	6.0	75C	15m	45m	1.5											85A	M394
20#	AC06BR	6	200	200	6.0	75C		75m	3 0				2 0m	100J	1.9				50	100J	M245a
21#	AC06BSR	6	200	200	6 0	75C		75m	3.0				2.0m	100J	1 9				50	100J	S18e
22#	AC06BT	6	200	200	6	75		75m	3 0				2.0m	100J	1 9				50	100J	C63d
23▼	BTD0320	6	200	200	6 0	80C	50	50	3 0				5 0m	100C	1 9	2 0u		10	100	100C	Z57
24	BTR0320	6	200	200	6 0	75	50m	50m	3.0				5.0m	100	1.9	20u		10p	60	100C	TO66
25	BTS0320	6	200	200	6 0	75	50m	50m	3.0				5 0m	100	1.9	20u		10p	60	100C	M94
26	BTU0320	6	200	200	6.0	75	50m	50m	3.0				5.0m	100	1 9	.20u		10p	60	100C	S131
27	SC141B	6	200	200	6 0	80	75m	50m	2 5						1.8			2.0	80	100J	M490
28	T206	6	200	200	6.0	70C	50m	80m	5.0						2 2	2 5u		30	100	100J	M94
29	T206S	6	200	200	6 0	70C	50m	80m	5 0						2.2	2.5u		30	100	100J	S131
30	TIC220B	6	200	200	6 0	70C		50m	3.0				1.0m	125	1.8			500	50	125A	M94d
31	TIC221B	6	200	200	6 0	70C		50m	3.0				1.0m	125	1 8			500	50	125A	S291
32	TIC222B	6	200	200	6 0	70C		50m	3 0				1 0m	125	1 8			500	50	125A	S131g
33	40668	6	200	200	8 0	80	30m	25m	2 5						2.0	2.2u		100	100	100C	M467
34	40721	6	200	200	8 0	80C	15m	45m	1 5											85A	M467
35▼	TIC226B	6	200	200	8.0	80	60m	50m	2 5				2.0m	110	2 1			500	80	110	
36#	2SM21	6	200	200	10	75C	40m	75m	3 0				3m	100J	1.4				70	100J	M365
37#	2SM58	6	200	200	10	70J		50u	3 0				5.0m	100J	1.6				80	100J	TO3
38▼#	2SM64	6	200	200	10	75C		30m	3.0				3.0m	100J	1.3			10	80 △	100J	M591
39▼#	2SM68	6	200	200	10	75C		30m	3 0				3.0m	100J	1.3			10	80 △	100J	M592
40▼#	2SM72	6	200	200	10	75C		30m	3 0				3.0m	100J	1.3			10	80 △	100J	S350a
41	40717	6	200	200	10	85C	15m	45m	1 5											85A	M94
42	40719	6	200	200	10	85C	15m	45m	1.5											85A	S131
43▼	40799	6	200	200	10	85C	30m	25m	2 5				2.0m	100J	1.6	2 5u		30	10u	100C	S304
44#	AC10BR	6	200	200	10	75C		75m	3 0				2.0m	100J	1.6				70	100J	M245a
45#	AC10BSR	6	200	200	10	75C		75m	3.0				2.0m	100J	1.6				70	100J	S18e
46#	AC10BT	6	200	200	10	75		75m	3.0				2.0m	100J	1.3				70	100J	C63d
47#	BCR10A4	6	200	200	10	75C		30m	3 0				3.0m	100J	1 3			6.0	80	100J	M245b
48#	BCR10B4	6	200	200	10	75C		30m	3 0				3.0m	100J	1.3			6 0	80	100J	M480
49#	BCR10C4	6	200	200	10	75C		30m	3.0				3.0m	100J	1.3			6.0	80	100J	S94b
50	BTR0420	6	200	200	10	75	50m	100m	3.0				5.0m	100	1 5	20u		10p	100	100C	TO66
51	BTS0420	6	200	200	10	75	50m	100m	3.0				5.0m	100	1 5	.20u		10p	100	100C	M94
52	BTU0420	6	200	200	10	75	50m	100m	3 0				5 0m	100	1.5	20u		10p	100	100C	S131
53	BTV0420	6	200	200	10	75	50m	100m	3.0				5.0m	100	155	20u		10p	100	100C	S291
54▼	MAC1-4	6	200	200	10	75	30m	40m	2 0						1.8	1.5u		5 0	100 △	100	C84
55▼	MAC2-4	6	200	200	10	75	30m	40m	2 0						1 8	1.5u		5.0	100 △	100	S230
56▼	MAC3-4	6	200	200	10	75	30m	40m	2 0						1.8	1.5u		5.0	100 △	100	C85
57▼	MAC4-4	6	200	200	10	75	50m	50m	2.5						1 8	1 5u		5.0	100 △	100	C84
58▼	MAC5-4	6	200	200	10	75	50m	50m	2.5						1 8	1 5u		5.0	100 △	100	S230
59▼	MAC6-4	6	200	200	10	75	50m	50m	2.5						1.8	1.5u		5.0	100 △	100	C85
60	SC146B	6	200	200	10	80	75m	50m	2.5						1 6			2.0	80	100J	M490
61	TIC230B	6	200	200	10	70C		50m	3.0				1.0m	125	1 6			500	80	125A	M94d
62	TIC231B	6	200	200	10	70C		50m	3.0				1.0m	125	1 6			500	80	125A	S291
63	TIC232B	6	200	200	10	70C		50m	3.0				1.0m	125	1 6			500	80	125A	S131g
64#	TRAL110	6	200 △	200	10	25A		100m	3.0				3.0m	100J	2 5				60		M94g
65#	TRAL110D	6	200 △	200	10	25A		100m	3.0				3.0m	100J	2.5				60		S131
66	40711	6	200	200	15	80C	20m	45m	1.5											85A	M94
67	40713	6	200	200	15	80C	20m	45m	1.5											85A	S131
68	40715	6	200	200	15	70C	15m	45m	1.5											85A	TO66
69▼	40802	6	200	200	15	75C	75m	50m	2.5				2 0m	100J	1.8	2.5u		30	100	100C	S304
70	BTS0520	6	200	200	15	75	50m	100m	3.0				5 0m	100	1.9	.20u		10p	150	100C	M94
71	BTU0520	6	200	200	15	75	50m	100m	3 0				5.0m	100	1.9	20u		10p	150	100C	S131
72	TIC240B	6	200	200	15	70C		50m	3.0				1.0m	125	1.6			500	100	125A	M94d
73	TIC241B	6	200	200	15	70C		50m	3 0				1.0m	125	1 6			500	100	125A	S291
74	GBS216	6	200	200	16	85§		10	10				5.0m	85	1.5				135	175	TO48
75	2N5273	6	200	200	25	60C	100m§	150m	3.5				1 0m	125C	1.7				400	125C	TO48
76#	BCR25A4L	6	200	200	25	90C		50m	3.0				5 0m	125J	1.6 †			10	220	125J	S309
77#	BCR25A4R	6	200	200	25	90C		50m	3 0				5.0m	125J	1 6 †				220	125J	S309
78	BTU0620	6	200	200	25	75	100m	100m	3 0				5.0m	100	1 9	.20u		10p	200	100C	S131
79#	BTX94-200	6	200	200	25	85C		100m	3.0				8.0m	125J	2 3			100	200 §	125J	TO48
80	MAC35-4	6	200	200	25	67C	75m	100m	3.0				4.0	110J		1 0u		100 ∅	225 §	110J	M94b
81	MAC36-4	6	200	200	25	67C	75m	100m	3 0				4 0	110J		1.0u		100 ∅	225 §	110J	S131k
82	MAC37-4	6	200	200	25	67C	75m	75m	3.0				4 0m	110J	1 5	1 0u		100	225 §	110J	M94h
83	MAC38-4	6	200	200	25	67C	75m	75m	3.0				4 0m	110J	1.5	1.0u		100	225 §	110J	S131m
84	T225	6	200	200	25	70C	60m	100m	5 0						2.5	3.0u		40	250	100J	M94
85	T225S	6	200	200	25	70C	60m	100m	5.0						2.5	3.0u		40	250	100J	S131
86♦	40660	6	200	200	30	65C	60m	50m	2.5				4.0m	100J	2.5	3.0u		40	300	100C	M94f
87♦	40662	6	200	200	30	60C	60m	50m	2.5				4.0m	100J	2.5	3.0u		40	300	100C	S131k
88	40705	6	200	200	30	65C	25m	45m	1.5											85A	M94
89	40707	6	200	200	30	60C	25m	45m	1.5											85A	S131
90▼	40805	6	200	200	30	55C	60m	50m	2.5				4.0m	100J	2.5	3.0u		40	300	100C	S304a
91▼	40688	6	200	200	40	60C	60m	50m	2.5				4.0m	110J	1.8	3.0u		50	300	110C	S304a
92	40699	6	200	200	40	70C	25m	45m	1.5											85A	M94
93	40702	6	200	200	40	65C	25m	45m	1.5											85A	S131
94#	BCR70A4	6	200	200	70	78C		200m	4.0				15m	125J	2.1			100	800 △	125J	S332
95#	SM80D11	6	200	200	80	105C	80m	150m	3.0				10m	125J	2.0				1 2k	125J	S91b
96#	BCR150A4	6	200	200	150	81C		350m	3.5				15m	125J	2.3			20	2.0k	125J	S237e
97▼#	BCR300A4	6	200	200	300	72C		400m	4.0				30m	125J	2.0			100	3.0k△	125J	S351
98#	TAG310-200	6	200 ∅	240	10m	70C	50m	.10	4.0				1.5m	105	1.4				100	105	TO48
99	EL25	6	250		25m	80A		25m		3.0m	5.0								500m	100A	TO18
100	EL25A	6	250		25m	80A		25m		3.0m	5.0								500m	100A	TO46
101	EL250	6	250		25m	80A		25m		3.0m	5.0								500m	100A	C134
102	EL250G	6	250		25m	80A		25m		3.0m	5.0								500m	100A	C134a
103	EL30	6	300		25m	80A		25m		3 0m	5.0								500m	100A	TO18
104	EL30A	6	300		25m	80A		25m		3 0m	5.0								500m	100A	TO46
105	EL300	6	300		25m	80A		25m		3.0m	5.0								500m	100A	C134
106	EL300G	6	300		25m	80A		25m		3 0m	5.0								500m	100A	C134a
107	TG33	6	300		3.0	75C	15m	10m	2 2				750u	100C	2.2	2 5u		10	30	100A	C16z
108	PF63	6	300		6 0	75C	50m	80m	2.5				2.0m	100C	2.2	2.5u		30	100	100A	M246a
109	SPF63	6	300		6 0	75C	50m	80m	2 5				2.0m	100C	2.2	2.5u		30	100	100A	S131p
110	2N3271	6	300	300	200u	150A	2 0m									3.0u∅	22u∅		60	150A	TO59

SYMBOLS AND CODES EXPLAINED IN INTERPRETER

7. MISCELLANEOUS SILICON PNPN DEVICES

IN ORDER OF (1) USE, (2) MAX FWD BKOVER VOLT (3) MAX REV VOLT, (4) MAX CUR, (5) TYPE No.

LINE No.	5 TYPE No.	1 USE	2 MAX. FWD. BKOVER VBO (V)	3 MAX. REV. PRV (V)	MAX CONT. CURRENT 4 If (A)	at TEMP (°C)	MAX. HOLD CUR Ih @ 25°C (A)	MAX GATE ON-OFF RATINGS @ 25°C TURN-ON Igf (A)	Vgf (V)	TURN-OFF Igo (A)	Vgo (V)	Ic (A)	MAX. SAT. CURRENT Is at VBO (A)	at TEMP (°C)	MAX. FWD. VOLT. DROP (V)	SWITCHING TIME @25°C Ton (s)	Toff (s)	MIN dV/dt V/us	ABS. MAX. RATINGS PK SRG CUR. (A)	MAX TEMP (°C)	DWG. No.
1	BTD0130	6	300	300	1 0	75	25m	25m	2.0				3.0m	100	1.5	.20u		10p	15	100C	TO5
2	BTD0230	6	300	300	3 0	75	50m	25m	2.0				3.0m	100	1.9	.20u		10p	15	100C	TO5
3	BTR0230	6	300	300	3.0	75	50m	50m	3.0				3.0m	100	1.5	.20u		10p	40	100C	TO66
4	BTS0230	6	300	300	3.0	75	50m	50m	3.0				3.0m	100	1.5	20u		10p	40	100C	M94
5▼	BTD0330	6	300	300	6.0	80C	50	50	3.0				5.0m	100C	1.9	2.0u		10	100	100C	Z57
6	BTR0330	6	300	300	6.0	75	50m	50m	3.0				5.0m	100	1.9	.20u		10p	60	100C	TO66
7	BTS0330	6	300	300	6.0	75	50m	50m	3.0				5.0m	100	1.9	20u		10p	60	100C	M94
8	BTU0330	6	300	300	6 0	75	50m	50m	3.0				5.0m	100	1.9	20u		10p	60	100C	S131
9▼#	2SM65	6	300	300	10	75C		30m	3.0				3 0m	100J	1.3			10	80 △	100J	M591
10▼#	2SM69	6	300	300	10	75C		30m	3.0				3.0m	100J	1.3			10	80 △	100J	M592
11▼#	2SM73	6	300	300	10	75C		30m	3.0				3.0m	100J	1 3			10	80 △	100J	S350a
12#	BCR10A6	6	300	300	10	75C		30m	3.0				3.0m	100J	1.3			10	80	100J	M245b
13#	BCR10B6	6	300	300	10	75C		30m	3.0				3.0m	100J	1.3			10	80	100J	M480
14#	BCR10C6	6	300	300	10	75C		30m	3.0				3 0m	100J	1.3			10	80	100J	S94b
15	BTR0430	6	300	300	10	75	50m	100m	3.0				5.0m	100	1.5	20u		10p	100	100C	TO66
16	BTS0430	6	300	300	10	75	50m	100m	3.0				5.0m	100	1 5	20u		10p	100	100C	M94
17	BTU0430	6	300	300	10	75	50m	100m	3.0				5.0m	100	1.5	.20u		10p	100	100C	S131
18	BTV0430	6	300	300	10	75	50m	100m	3.0				5.0m	100	155	.20u		10p	100	100C	S291
19▼	MAC1-5	6	300	300	10	75	30m	40m	2.0						1.8	1.5u		5.0	100 △	100	C84
20▼	MAC2-5	6	300	300	10	75	30m	40m	2.0						1.8	1.5u		5 0	100 △	100	S230
21▼	MAC3-5	6	300	300	10	75	30m	40m	2.0						1.8	1.5u		5.0	100 △	100	C85
22▼	MAC4-5	6	300	300	10	75	50m	50m	2.5						1 8	1.5u		5.0	100 △	100	C84
23▼	MAC5-5	6	300	300	10	75	50m	50m	2.5						1.8	1 5u		5.0	100 △	100	S230
24▼	MAC6-5	6	300	300	10	75	50m	50m	2 5						1.8	1.5u		5.0	100 △	100	C85
25	BTS0530	6	300	300	15	75	50m	100m	3.0				5.0m	100	1 9	.20u		10p	150	100C	M94
26	BTU0530	6	300	300	15	75	50m	100m	3 0				5.0m	100	1 9	20u		10p	150	100C	S131
27#	BCR25A6L	6	300	300	25	90C		50m	3.0				5 0m	125J	1.6 †			10	220	125J	S309
28#	BCR25A6R	6	300	300	25	90C		50m	3 0				5 0m	125J	1.6 †				220	125J	S309
29	BTU0630	6	300	300	25	75	100m	100m	3.0				5.0m	100	1.9	.20u		10p	200	100C	S131
30#	BTX94-300	6	300	300	25	85C		100m	3.0				8.0m	125J	2.3			100	200 §	125J	TO48
31	MAC35-5	6	300	300	25	67C	75m	100m	3.0				4 0	110J		1 0u		100 ☑	225 §	110J	M94b
32	MAC36-5	6	300	300	25	67C	75m	100m	3 0				4 0	110J		1 0u		100 ☑	225 §	110J	S131k
33	MAC37-5	6	300	300	25	67C	75m	75m	3 0				4 0m	110J	1 5	1 0u		100	225 §	110J	M94h
34	MAC38-5	6	300	300	25	67C	75m	75m	3.0				4.0m	110J	1.5	1 0u		100	225 §	110J	S131m
35	EL35	6	350		25m	80A		25m		3.0m	5 0								500m	100A	TO18
36	EL35A	6	350		25m	80A		25m		3.0m	5.0								500m	100A	TO46
37	EL350	6	350		25m	80A		25m		3.0m	5 0								500m	100A	C134
38	EL350G	6	350		25m	80A		25m		3.0m	5.0								500m	100A	C134a
39	JAN2N5807	6	380 *		25	80C	100m	120m	4.0			§			1.6			20	200	125S	
40	EL40	6	400		25m	80A		25m		3 0m	5.0								500m	100A	TO18
41	EL40A	6	400		25m	80A		25m		3 0m	5 0								500m	100A	TO46
42	EL400	6	400		25m	80A		25m		3 0m	5 0								500m	100A	C134
43	EL400G	6	400		25m	80A		25m		3.0m	5 0								500m	100A	C134a
44	40770	6	400		500m	90C	15m	10m	2.2				750u	100J	2.2			10	50	150S	C16g
45	40772	6	400		500m	90C	30m	25m	2.2				750u	100J	2.2			10	50	150S	C16g
46	A03003	6	400		1 6	125A	4 0m	10m	3 0						1.6	2.0u		200	20 §	125J	M506
47	A03004	6	400		1 6	125A	10m	25m	3 0						1 6	3 0u		300	20 §	125J	M506
48	A03023	6	400		1.6	125A	4 0m	10m	3.0						1.6	2.0u		200	20 §	125J	M506
49	A03024	6	400		1 6	125A	10m	25m	3.0						1 6	3 0u		300	20 §	125J	M506
50	MQ44G1	6	400		1 6	80C	3.0mØ	50m	3.0						1 6				20 §		M508a
51	MQ44S1	6	400		1.6	80C	2 0mØ	10m	3 0						1.6				20 §		M508a
52	MQ44T1	6	400		1.6	80C	3 0mØ		3.0						1 6				20 §		M508a
53	MQ54G1	6	400		1 6	80C	3 0mØ	50m	3 0						1.6				20 §		M508b
54	MQ54S1	6	400		1 6	80C	2.0mØ	10m	3.0						1.6				20 §		M508b
55	MQ54T1	6	400		1 6	80C	3.0mØ		3.0						1.6				20 §		M508b
56	MQ64G1	6	400		1.6	80C	3.0mØ	50m	3 0						1.6				20 §		M508
57	MQ64S1	6	400		1 6	80C	2 0mØ	10m	3.0						1 6				20 §		M508
58	MQ64T1	6	400		1.6	80C	3.0mØ		3.0						1 6				20 §		M508
59	Q4001M1	6	400		2 3	60C	10m	50m	3.0						1.6	3 0u		300	20 §	125J	C92a
60	Q4001M2	6	400		2 3	60C	10m	50m	3 0						1.6	3.0u		300	20 §	125J	C16h
61	Q4001MS1	6	400		2 3	60C	4 0m	10m	3.0						1 6	2 0u		200	20 §	125J	C92a
62	Q4001MS2	6	400		2 3	60C	4.0m	10m	3 0						1 6	2 0u		200	20 §	125J	C16h
63	Q4001MST1	6	400		2 3	60C	4 0m	10m	3 0						1 6	2.0u		200	20 §	125J	C92a
64	Q4001MST2	6	400		2 3	60C	4 0m	10m	3.0						1.6	2 0u		200	20 §	125J	C16h
65	Q4001MT1	6	400		2 3	60C	10m	50m	3 0						1.6	3 0u		300	20 §	125J	C92a
66	Q4001MT2	6	400		2 3	60C	10m	50m	3.0						1.6	3.0u		300	20 §	125J	C16h
67	Q4001P	6	400		2 3	60C	10m	50m	3.0						1 6	3.0u		300	20 §	125J	C118
68	Q4001PS	6	400		2 3	60C	4 0m	10m	3 0						1.6	2 0u		200	20 §	125J	C118
69	Q4001PST	6	400		2 3	60C	4.0m	10m	3 0						1.6	2.0u		200	20 §	125J	C118
70	Q4001PT	6	400		2.3	60C	10m	50m	3 0						1.6	3 0u		300	20 §	125J	C118
71	40692	6	400		2 5	60C	5 0m	4.0m	2 2				750u	90	2.2			5.0p	25	100C	TO5
72	40762	6	400		2 5	60C	5 0m	4.0m	2 2				750u	90	2.2			5 0p	25	100C	M395
73	40774	6	400		2.5	90C	30m	25m	2 2				4.0m	100J	2 2			30	200	150S	C110
74	SC35D	6	400		3 0	80C	50m	50m	3.0						2 3			2 0p	30 △	100J	S131
75	SC36D	6	400		3.0	80C	50m	50m	3.0						2.3			2 0p	30 △	100J	M94
76	TG34	6	400		3 0	75C	15m	10m	2.2				750u	100C	2 2	2 5u		10	30	100A	C16z
77▼#	TXC02A40	6	400		3 0	75C	80m	50m	3.0						1.5			50	50	125S	M478
78	A01003	6	400		4.3	60C	4 0m	10m	3.0						1.6	2.0u		200	20 §	125J	M507
79	A01004	6	400		4.3	60C	10m	25m	3.0						1.6	3.0u		300	20 §	125J	M507
80	A01013	6	400		4.3	60C	4 0m	10m	3.0						1.6	2 0u		200	20 §	125J	M507
81	A01014	6	400		4 3	60C	10m	25m	3 0						1 6	3.0u		300	20 §	125J	M507
82	Q4003P	6	400		4.3	60C	20m	50m	3.0						1.6	3.0u		300	60 §	125J	C118a
83	Q4003PT	6	400		4 3	60C	20m	50m	3.0						1.6	3.0u		300	60 §	125J	C118a
84	40510	6	400		5.5	25A	30m	25m	2.5						2.2	2 2u		3.0	100	100C	M395
85	Q4004	6	400		5.7	60C	20m	50m	3 0						1 6	3 0u		300	60 §	125J	C121
86	Q4004A	6	400		5.7	60C	20m	50m	3.0						1.6	3.0u		300	60 §	125J	C120
87	Q4004B	6	400		5 7	60C	20m	50m	3.0						1.6	3.0u		300	60 §	125J	S307
88	Q4004T	6	400		5 7	60C	20m	50m	3 0						1.6	3.0u		300	60 §	125J	C121
89	Q4004TA	6	400		5 7	60C	20m	50m	3.0						1 6	3.0u		300	60 §	125J	C120
90	Q4004TB	6	400		5.7	60C	20m	50m	3.0						1.6	3.0u		300	60 §	125J	S307
91	40430	6	400		6.0	75C	30m	25m	2.2				4 0m	100C	2.2	2.2u		5 0p	80	100C	TO66
92	40432	6	400		6 0	75C	30m	.22m	40				4.0m	100C	2.3	2.2u		5.0p	100	100C	Z57
93	40486	6	400		6.0	75C	30m	25m	2.2				4.0m	100C	2 3	2 2u		5.0p	100	100C	Z57
94	40503	6	400		6.0	75C	30m	25m	2.2				4.0m	100C	2.2	2 2u		5 0p	80	100C	M394
95	40512	6	400		6.0	75C	30m	.22m	40				4 0m	100C	2.3	2 2u		5 0p	100	100C	M395
96	40639	6	400		6.0	58C	30m	25m	2.2						2.3	2 2u		3 0	100	100C	M457
97	40776	6	400		6.0	90C	75m	50m	2 5				2 0m	100J	1.8			30	200	150S	M94f
98	40778	6	400		6.0	90C	75m	50m	2.5				2 0m	100J	1 8			30	200	150S	S131k
99	GBS476D	6	400		6.0	80C	50m	50m	3.0				5 0m	125C	1 9				60 §	150C	TO64
100	PF64	6	400		6 0	75C	50m	80m	2.5				2 0m	100C	2 2	2.5u		30	100	100A	M246a
101	S406	6	400		6.0	70C		1 0				§							100 §	100A	M94
102	S406S	6	400		6.0	70C		1.0				§							100 §	100A	S131
103	SC40D2	6	400		6.0		50m	50m	2.5						1.8			20	74	125S	S330
104	SC40D12	6	400		6 0		50m	50m	2.5						1.8			20	74	125S	S131n
105	SC40D13	6	400		6 0		50m	25m	2.0						1 8			20	74	125S	S131n
106	SC40D14	6	400		6 0		50m	50m	2.5						1 8			20	173	125S	S131n
107	SC40D22	6	400		6 0		50m	50m	2.5						1 8			20	74	125S	S330
108	SC40D23	6	400		6 0		50m	25m	2 0						1 8			20	74	125S	S330
109	SC40D24	6	400		6 0		50m	50m	2.5						1 8			20	173	125S	S330
110	SC40D	6	400		6 0		50m	50m	2.5						1.8			20	74	125S	S131n

SYMBOLS AND CODES EXPLAINED IN INTERPRETER

7. MISCELLANEOUS SILICON PNPN DEVICES

IN ORDER OF (1) USE, (2) MAX FWD BKOVER VOLT (3) MAX REV VOLT, (4) MAX CUR, (5) TYPE No.

LINE No	5 TYPE No.	1 USE	2 MAX. FWD. BKOVER VBO (V)	3 MAX. REV. PRV (V)	MAX CONT. CURRENT 4 If (A)	at TEMP (°C)	MAX. HOLD CUR Ih @ 25°C (A)	MAX GATE ON-OFF RATINGS @ 25°C TURN-ON Igf (A)	Vgf (V)	TURN-OFF Igo (A)	Vgo (V)	Ic (A)	MAX. SAT. CURRENT Is at VBO (A)	at TEMP (°C)	MAX. FWD. VOLT. DROP (V)	SWITCHING TIME @25°C Ton (s)	Toff (s)	MIN dV/dt V/us	ABS. MAX. RATINGS PK SRG CUR. (A)	MAX TEMP (°C)	DWG. No.
1	SC41D12	6	400		6 0		50m	50m	2.5						1 8			20	74	125S	M94d
2	SC41D13	6	400		6.0		50m	25m	2 0						1 8			20	74	125S	M94d
3	SC41D14	6	400		6 0		50m	50m	2 5						1 8			20	173	125S	M94d
4	SC41D	6	400		6 0		50m	50m	2.5						1 8			20	74	125S	M94d
5	SPF64	6	400		6 0	75C	50m	80m	2 5				2 0m	100C	2.2	2 5u		30	100	100A	S131p
6#	TRC6-400A	6	400		6 0	75C	50m	50m							1.8				50	100J	M94
7#	TRC6-400B	6	400		6 0	75C	50m	50m							1 8				50	100J	S131
8▼#	TXC01A40	6	400		6 0	75C	80m	50m	3 0						1 6			50	50	125S	
9	A01022	6	400		6 4	60C	20m	25m	3.0						1.6	3 0u		300	60 §	125J	M507
10	A01042	6	400		6.4	60C	20m	25m	3.0						1.6	3 0u		300	60 §	125J	M507
11	Q4006	6	400		8 5	60C	20m	50m	3.0						1 6	3.0u		350	80 §	125J	C121
12	Q4006A	6	400		8.5	60C	20m	50m	3.0						1 6	3.0u		350	80 §	125J	C120
13	Q4006B	6	400		8 5	60C	20m	50m	3.0						1.6	3 0u		350	80 §	125	S307
14	Q4006T	6	400		8 5	60C	20m	50m	3.0						1.6	3 0u		350	80 §	125J	C121
15	Q4006TA	6	400		8 5	60C	20m	50m	3.0						1 6	3.0u		350	80 §	125J	C120
16	Q4006TB	6	400		8 5	60C	20m	50m	3.0						1.6	3 0u		350	80 §	125	S307
17	A01062	6	400		9.2	60C	20m	25m	3.0						1.6	3.0u		350	80 §	125J	M507
18	A01082	6	400		9.2	60C	20m	25m	3.0						1.6	3 0u		350	80 §	125J	M507
19	40780	6	400		10	85C	75m	50m	2 5				2 0m	100J	1 8			30	200	150S	M94f
20	40782	6	400		10	85C	75m	50m	2 5				2.0m	100J	1 8			30	200	150S	S131k
21	S410△	6	400		10	70C		4.0				§							100 §	100A	M94
22	S410S	6	400		10	70C		4 0				§							100 §	100A	S131
23	SC45D2	6	400		10		50m	50m	2.5						1 6			20	90	125S	S330
24	SC45D12	6	400		10		50m	50m	2 5						1.6			20	90	125S	S131n
25	SC45D13	6	400		10		50m	25m	2.0						1 6			20	90	125S	S131n
26	SC45D14	6	400		10		50m	50m	2 5						1 6			20	187	125S	S131n
27	SC45D22	6	400		10		50m	50m	2 5						1 6			20	90	125S	S330
28	SC45D23	6	400		10		50m	25m	2.0						1 6			20	90	125S	S330
29	SC45D24	6	400		10		50m	50m	2.5						1 6			20	187	125S	S330
30	SC45D	6	400		10		50m	50m	2 5						1.6			20	90	125S	S131n
31	SC46D12	6	400		10		50m	50m	2 5						1 6			20	90	125S	M94d
32	SC46D13	6	400		10		50m	25m	2 0						1.6			20	90	125S	M94d
33	SC46D14	6	400		10		50m	50m	2 5						1.6			20	187	125S	M94d
34	SC46D	6	400		10		50m	50m	2 5						1 6			20	90	125S	M94d
35#	TRC10-400A	6	400		10	75C	50m	50m							1.7				80	100J	M94
36#	TRC10-400B	6	400		10	75C	50m	50m							1.7				80	100J	S131
37▼#	TXD99A40	6	400		10	75C	50m	50m	2.5						1.6			20	90	125S	M94d
38	Q4008A	6	400		11	60C	35m	50m	3 0						1 6	3 0u		400	100 §	125J	C120
39	Q4008B	6	400		11	60C	35m	50m	3.0						1 6	3 0u		400	100 §	125J	S307
40	Q4008TA	6	400		11	60C	35m	50m	3.0						1 6	3.0u		400	100 §	125J	C120
41	Q4008TB	6	400		11	60C	35m	50m	3 0						1 6	3 0u		400	100 §	125J	S307
42	A01102	6	400		12	60C	35m	25m	3 0						1.6	3.0u		400	100 §	125J	M507
43	A01122	6	400		12	60C	35m	25m	3 0						1 6	3.0u		400	100 §	125J	M507
44	A01142	6	400		14	60C	35m	25m	3.0						1 6	3 0u		400	110 §	125J	M507
45	A01162	6	400		14	60C	35m	25m	3.0						1 6	3.0u		400	110 §	125J	M507
46	Q4010	6	400		14	60C	35m	50m	3.0						1.6	3.0u		400	110 §	125J	C121
47	Q4010A	6	400		14	60C	35m	50m	3.0						1 6	3.0u		400	110 §	125J	C120
48	Q4010B	6	400		14	60C	35m	50m	3 0						1.6	3.0u		400	110 §	125J	S307
49	Q4010T	6	400		14	60C	35m	50m	3.0						1.6	3.0u		400	110 §	125J	C121
50	Q4010TA	6	400		14	60C	35m	50m	3.0						1 6	3 0u		400	110 §	125J	C120
51	Q4010TB	6	400		14	60C	35m	50m	3 0						1 6	3.0u		400	110 §	125J	S307
52	40576	6	400		15	70C	60m	80m	2 5						2.0	3.0u		10p	100	100C	TO66
53	40784	6	400		15	80C	75m	50m	2 5				2 0m	100J	1 8			30	200	150S	M94f
54	40786	6	400		15	80C	75m	50m	2.5				2.0m	100J	1 8			30	200	150S	S131k
55	S415△	6	400		15	70C		4 0				§							100 §	100A	M94
56	S415S	6	400		15	70C		4 0				§							100 §	100A	S131
57	SC50D2	6	400		15		50m	50m	2.5						1 6			20	90	125S	S330
58	SC50D12	6	400		15		50m	50m	2 5						1 6			20	90	125S	S131n
59	SC50D13	6	400		15		50m	25m	2 0						1.6			20	90	125S	S131n
60	SC50D14	6	400		15		50m	50m	2 5						1.6			20	187	125S	S131n
61	SC50D22	6	400		15		50m	50m	2.5						1.6			20	90	125S	S330
62	SC50D23	6	400		15		50m	25m	2.0						1.6			20	90	125S	S330
63	SC50D24	6	400		15		50m	50m	2 5						1.6			20	187	125S	S330
64	SC50D	6	400		15		50m	50m	2.5						1.6			20	90	125S	S131n
65	SC51D12	6	400		15		50m	50m	2.5						1 6			20	90	125S	M94d
66	SC51D13	6	400		15		50m	25m	2.0						1 6			20	90	125S	M94d
67	SC51D14	6	400		15		50m	50m	2 5						1 6			20	187	125S	M94d
68	SC51D	6	400		15		50m	50m	2.5						1 6			20	90	125S	M94d
69#	TRC15-400A	6	400		15	75C	50m	50m							1.7				100	100J	M94
70#	TRC15-400B	6	400		15	75C	50m	50m							1.7				100	100J	S131
71▼#	TXD98A40	6	400		15	80C	50m	50m	2.5						1 6			20	90	125S	M94d
72	TIC250D	6	400		20	70		100m	3.0				4.0m	110	2.0			5.0	200	70	M94c
73	TIC252D	6	400		20	70		100m	3.0				4.0m	110	2.0			5.0	200	70	S131d
74	Q4015	6	400		21	60C	35m	50m	3.0						1.6	4 0u		450	150 §	125J	C121
75	Q4015A	6	400		21	60C	35m	50m	3 0						1.6	4.0u		450	150 §	125J	C120
76	Q4015B	6	400		21	60C	35m	50m	3 0						1.6	4.0u		450	150 §	125J	S307
77	Q4015T	6	400		21	60C	35m	50m	3.0						1 6	4 0u		450	150 §	125J	C121
78	Q4015TA	6	400		21	60C	35m	50m	3.0						1.6	4.0u		450	150 §	125J	C120
79	Q4015TB	6	400		21	60C	35m	50m	3 0						1.6	4.0u		450	150 §	125J	S307
80	A01182	6	400		22	60C	35m	50m	3.0						1.6	4.0u		450	150 §	125J	M507
81	A01202	6	400		22	60C	35m	50m	3.0						1 6	4.0u		450	150 §	125J	M507
82	Q4025	6	400		25	80C	35m	80m	3 0						1.6	4.0u		450	230 §	125J	M505
83	Q4025C	6	400		25	80C	35m	80m	3.0						1.6	4 0u		450	230 §	125J	M504
84	Q4025D	6	400		25	80C	35m	80m	3.0						1 6	4.0u		450	230 §	125J	S308
85	S425△	6	400		25	70C		4 0				§							250 §	100A	M94
86	S425S	6	400		25	70C		4 0				§							250 §	100A	S131
87	SC60D	6	400		25	80C	100m	50m	2.5						1.4			5.0	250	115J	S131e
88	SC61D	6	400		25	80C	100m	50m	2.5						1.4			5.0	250	115J	S131f
89	TIC260D	6	400		25	70		100m	3.0				4.0m	110	1.7			5.0	250	70	M94c
90	TIC262D	6	400		25	70		100m	3 0				4 0m	110	1.7			5.0	250	70	S131d
91▼#	TXE99A40	6	400		25	80C	100m	50m	2 5						1.4			5.0	250	115J	S131f
92	TIC270D	6	400		40	70		100m	3 0				4.0m	110	1.7			5.0	400	70	M94c
93	TIC272D	6	400		40	70		100m	3.0				4.0m	110	1.7			5 0	400	70	S131d
94	Q4040PF	6	400		57	60C	35m	100m	3.0						1.6	5.0u		500	300 §	125J	M505
95	Q4040PFC	6	400		57	60C	35m	100m	3.0						1 6	5.0u		500	300 §	125J	M504
96	Q4040PFD	6	400		57	60C	35m	100m	3.0						1.6	5.0u		500	300 §	125J	S308
97▼	TIC226D	6	400	200	8.0	80	60m	50m	2 5				2.0m	110	2.1			500	80	110	
98	2N3272	6	400	400	200u	150A	2.0m									3 0u∅	22u∅		60	150A	TO59
99#	TAG302-400	6	400 ∅	400	2.0m	70C	3.0m∅	25m	2.0				1 0m	105	1.7				25	105	TO5
100#	TAG306-400	6	400 ∅	400	6.0m	70C	50m	50m	4 0				1 5m	105	1.7				60	105	TO66
101#	TAG307-400	6	400 ∅	400	6 0m	70C	50m	50m	4.0				1 5m	105	1 7				60	105	TO48
102#	TAG310-400	6	400 ∅	400	10m	70C	50m	.10	4.0				1.5m	105	1 4				100	105	TO48
103	BTD0140	6	400	400	1 0	75	25m	25m	2.0				3.0m	100	1 5	.20u		10p	15	100C	TO5
104#	TDAL220	6	400 △	400	1 0	25A		50m	3.0				1.0m	100J	2 0				20		C16e
105#	AC02DT	6	400	400	2	70		75m	2.0				1.0m	100J	2.2				15	100J	C16y
106#	AC02DTR	6	400	400	2	70		76m	2.0				1 0m	100J	2.2				15	100J	C133
107	40732	6	400	400	2.3	75C	15m	45m	1.5											85A	M395
108♦	40527	6	400	400	2 5	60C	5 0m	3.0m	2 2				750m	90J	2.2			5.0	25	90C	C16ab
109♦	40530	6	400	400	2 5	70C	15m	10m	2.2				750m	100J	2.2			10	25	100C	C16ab
110♦	40533	6	400	400	2 5	60C	5.0m	3.0m	2 2				750m	90J	2.2			5.0	25	90C	M466a

SYMBOLS AND CODES EXPLAINED IN INTERPRETER

7. MISCELLANEOUS SILICON PNPN DEVICES

IN ORDER OF (1) USE, (2) MAX FWD BKOVER VOLT (3) MAX REV VOLT, (4) MAX CUR, (5) TYPE No.

LINE No	5 TYPE No.	1 USE	2 MAX. FWD. BKOVER VBO (V)	3 MAX. REV. PRV (V)	MAX CONT. CURRENT 4 If (A)	at TEMP (°C)	MAX. HOLD CUR Ih @ 25°C (A)	MAX GATE ON-OFF RATINGS @ 25°C TURN-ON Igf (A)	Vgf (V)	TURN-OFF Igo (A)	Vgo (V)	Ic (A)	MAX. SAT. CURRENT Is at VBO (A)	at TEMP (°C)	MAX. FWD. VOLT. DROP (V)	SWITCHING TIME @25°C Ton (s)	Toff (s)	MIN dV/dt V/us	ABS. MAX. RATINGS PK SRG CUR. (A)	MAX TEMP (°C)	DWG. No.
1♦	40536	6	400	400	2 5	70C	15m	10m	2.2				750m	100J	2 2			10	25	100C	M466a
2	40686	6	400	400	2.5	70C	35m	25m	2.2						2 6			10	25	100C	M466
3	40695	6	400	400	2.5	70C	6.0m	45m	1.5											85A	M395
4	40698	6	400	400	2.5	70C	6 0m	45m	1.5											85A	TO5
5	BTD0240	6	400	400	3.0	75	50m	25m	2.0				3 0m	100	1 9	20u		10p	15	100C	TO5
6	BTR0240	6	400	400	3.0	75	50m	50m	3 0				3.0m	100	1 5	20u		10p	40	100C	TO66
7	BTS0240	6	400	400	3.0	75	50m	50m	3 0				3 0m	100	1 5	20u		10p	40	100C	M94
8#	TMAL220	6	400 △	400	3 0	25A		100m	3 0				3.0m	100J	2 2				40		S141d
9	40734	6	400	400	4.2	75C	15m	45m	1.5											85A	M457
10	40726	6	400	400	6.0	75C	15m	45m	1 5											85A	TO5
11	40728	6	400	400	6.0	75C	15m	45m	1.5											85A	TO66
12	40730	6	400	400	6.0	75C	15m	45m	1 5											85A	M394
13#	AC06DR	6	400	400	6.0	75C		75m	3.0				2 0m	100J	1 9				50	100J	M245a
14#	AC06DSR	6	400	400	6.0	75C		75m	3 0				2.0m	100J	1 9				50	100J	S18e
15#	AC06DT	6	400	400	6	75		75m	3.0				2 0m	100J	1.9				50	100J	C63d
16▼	BTD0340	6	400	400	6.0	80C	50	50	3.0				5 0m	100C	1.9	2 0u		10	100	100C	Z57
17	BTR0340	6	400	400	6.0	75	50m	50m	3.0				5 0m	100	1.9	20u		10p	60	100C	TO66
18	BTS0340	6	400	400	6.0	75	50m	50m	3.0				5.0m	100	1 9	20u		10p	60	100C	M94
19	BTU0340	6	400	400	6.0	75	50m	50m	3 0				5 0m	100	1 9	20u		10p	60	100C	S131
20	SC141D	6	400	400	6.0	80	75m	50m	2 5						1.8			2 0	80	100J	M490
21	T406	6	400	400	6.0	70C	50m	80m	5.0						2 2	2.5u		20	100	100J	M94
22	T406S	6	400	400	6.0	70C	50m	80m	5.0						2.2	2 5u		20	100	100J	S131
23	TIC220D	6	400	400	6.0	70C		50m	3.0				1.0m	125	1 8			500	50	125A	M94d
24	TIC221D	6	400	400	6.0	70C		50m	3 0				1.0m	125	1 8			500	50	125A	S291
25	TIC222D	6	400	400	6.0	70C		50m	3 0				1 0m	125	1.8			500	50	125A	S131g
26	40669	6	400	400	8 0	80	30m	25m	2 5						2 0	2.2u		75	100	100C	M467
27	40722	6	400	400	8.0	80C	15m	45m	1.5											85A	M467
28▼#	2SM66	6	400	400	10	75C		30m	3.0				3.0m	100J	1 3			10	80 △	100J	M591
29▼#	2SM70	6	400	400	10	75C		30m	3.0				3 0m	100J	1 3			10	80 △	100J	M592
30▼#	2SM74	6	400	400	10	75C		30m	3.0				3 0m	100J	1 3			10	80 △	100J	S350a
31	40718	6	400	400	10	85C	15m	45m	1 5											85A	TO66
32	40720	6	400	400	10	85C	15m	45m	1 5											85A	S131
33▼	40800	6	400	400	10	85C	30m	25m	2 5				2 0m	100J	1 6	2 5u		20	100	100C	S304
34#	AC10DR	6	400	400	10	75C		75m	3.0				2 0m	100J	1.6				70	100J	M245a
35#	AC10DSR	6	400	400	10	75C		75m	3 0				2 0m	100J	1 6				70	100J	S18e
36#	AC10DT	6	400	400	10	75		75m	3 0				2 0m	100J	1 3				70	100J	C63d
37#	BCR10A8	6	400	400	10	75C		30m	3 0				3 0m	100J	1 3			10	80	100J	M245b
38#	BCR10B8	6	400	400	10	75C		30m	3.0				3 0m	100J	1 3			10	80	100J	M480
39#	BCR10C8	6	400	400	10	75C		30m	3.0				3.0m	100J	1 3			10	80	100J	S94b
40	BTR0440	6	400	400	10	75	50m	100m	3.0				5 0m	100	1 5	20u		10p	100	100C	TO66
41	BTS0440	6	400	400	10	75	50m	100m	3 0				5.0m	100	1 5	20u		10p	100	100C	M94
42	BTU0440	6	400	400	10	75	50m	100m	3 0				5 0m	100	1 5	.20u		10p	100	100C	S131
43	BTV0440	6	400	400	10	75	50m	100m	3 0				5 0m	100	155	20u		10p	100	100C	S291
44▼	MAC1-6	6	400	400	10	75	30m	40m	2 0						1 8	1 5u		5 0	100 △	100	C84
45▼	MAC2-6	6	400	400	10	75	30m	40m	2.0						1 8	1 5u		5.0	100 △	100	S230
46▼	MAC3-6	6	400	400	10	75	30m	40m	2 0						1 8	1 5u		5 0	100 △	100	C85
47▼	MAC4-6	6	400	400	10	75	50m	50m	2 5						1 8	1 5u		5.0	100 △	100	C84
48▼	MAC5-6	6	400	400	10	75	50m	50m	2 5						1 8	1 5u		5 0	100 △	100	S230
49▼	MAC6-6	6	400	400	10	75	50m	50m	2 5						1 8	1 5u		5.0	100 △	100	C85
50	SC146D	6	400	400	10	80	75m	50m	2 5						1 6			2 0	80	100J	M490
51	T410	6	400	400	10	70C	60m	100m	5 0						2 2	3.0u		30	100	100J	M94
52	T410S	6	400	400	10	70C	60m	100m	5 0						2.2	3 0u		30	100	100J	S131
53	TIC230D	6	400	400	10	70C		50m	3 0				1.0m	125	1.6			500	80	125A	M94d
54	TIC231D	6	400	400	10	70C		50m	3 0				1 0m	125	1 6			500	80	125A	S291
55	TIC232D	6	400	400	10	70C		50m	3 0				1 0m	125	1.6			500	80	125A	S131g
56#	TRAL220	6	400 △	400	10	25A		100m	3 0				3 0m	100J	2.5				60		M94g
57#	TRAL220D	6	400 △	400	10	25A		100m	3 0				3 0m	100J	2 5				60		S131
58	40712	6	400	400	15	80C	20m	45m	1 5											85A	M94
59	40714	6	400	400	15	80C	20m	45m	1 5											85A	S131
60	40716	6	400	400	15	70C	15m	45m	1 5											85A	S131
61▼	40803	6	400	400	15	75C	75m	50m	2 5				2 0m	100J	1 8	2 5u		20	100	100C	S304
62	BTS0540	6	400	400	15	75	50m	100m	3 0				5 0m	100	1 9	20u		10p	150	100C	M94
63	BTU0540	6	400	400	15	75	50m	100m	3 0				5 0m	100	1 9	.20u		10p	150	100C	S131
64	T415	6	400	400	15	70C	60m	100m	5 0						2 2	3 0u		30	100	100J	M94
65	T415S	6	400	400	15	70C	60m	100m	5.0						2 2	3 0u		30	100	100J	S131
66	TIC240D	6	400	400	15	70C		50m	3 0				1 0m	125	1 6			500	100	125A	M94d
67	TIC241D	6	400	400	15	70C		50m	3 0				1.0m	125	1 6			500	100	125A	S291
68	GBS416	6	400	400	16	85§		10	10				5 0m	85	1.5				135	175	TO48
69	2N5274	6	400	400	25	60C	100m§	150m	3 5				1 0m	125C	1 7				400	125C	TO48
70#	BCR25A8L	6	400	400	25	90C		50m	3.0				5 0m	125J	1 6 †			20	220	125J	S309
71#	BCR25A8R	6	400	400	25	90C		50m	3.0				5 0m	125J	1.6 †				220	125J	S309
72	BTU0640	6	400	400	25	75	100m	100m	3.0				5 0m	100	1 9	20u		10p	200	100C	S131
73#	BTX94-400	6	400	400	25	85C		100m	3.0				8 0m	125J	2 3			100	200 §	125J	TO48
74	MAC35-6	6	400	400	25	67C	75m	100m	3 0				4 0	110J		1 0u		100 ⊘	225 §	110J	M94b
75	MAC36-6	6	400	400	25	67C	75m	100m	3.0				4.0	110J		1.0u		100 ⊘	225 §	110J	S131k
76	MAC37-6	6	400	400	25	67C	75m	75m	3 0				4 0m	110J	1 5	1 0u		100	225 §	110J	M94h
77	MAC38-6	6	400	400	25	67C	75m	3 0					4 0m	110J	1 5	1 0u		100	225 §	110J	S131m
78	T425	6	400	400	25	70C	60m	100m	5 0						2 5	3 0u		25	250	100J	M94
79	T425S	6	400	400	25	70C	60m	100m	5 0						2 5	3 0u		25	250	100J	S131
80♦	40661	6	400	400	30	65C	60m	50m	2 5				4 0m	100J	2 5	3 0u		25	300	100C	M94f
81♦	40663	6	400	400	30	60C	60m	50m	2 5				4 0m	100J	2 5	3 0u		25	300	100C	S131k
82	40706	6	400	400	30	65C	25m	45m	1 5											85A	M94
83	40708	6	400	400	30	60C	25m	45m	1.5											85A	S131
84▼	40806	6	400	400	30	55C	60m	50m	2 5				4 0m	100J	2 5	3 0u		25	300	100C	S304a
85▼	40689	6	400	400	40	60C	60m	50m	2 5				4 0m	110J	1 8	3 0u		30	300	110C	S304a
86	40700	6	400	400	40	70C	25m	45m	1 5											85A	M94
87	40703	6	400	400	40	65C	25m	45m	1 5											85A	S131
88#	BCR70A8	6	400	400	70	78C		200m	4 0				15m	125J	2 1			100	800 △	125J	S332
89#	BCR150A8	6	400	400	150	81C		350m	3 5				15m	125J	2 3			20	2 0k	125J	S237e
90	2N5257	6	400	400	200	65C	850m§	800m	3.0				15m	125C	2 1				1 3k§	125C	TO93
91▼#	BCR300A8	6	400	400	300	72C		400m	4.0				30m	125J	2.0			100	3.0k△	125J	S351
92#	2SM13	6	450	450	5	80C	40m	75m	3 0				3m	100J	1 8				45	100J	M365
93	40664	6	450	450	6.0	75C		50m	4 0						2 2			10	100	100C	C110
94	40667	6	450	450	6 0	75C		50m	4 0						2 2			10	100	100C	C110
95	40723	6	450	450	6 0	75C		45m	1 5											85A	TO5
96	40724	6	450	450	6 0	75C		45m	1 5											85A	M395
97#	2SM22	6	450	450	10	75C	40m	75m	3 0				3 0m	100J	1 4				70	100J	M365
98#	SM30G11	6	450	450	30	63C	80m	75m	3 0				5 0m	100C	1 4 †			30	240 △	100	S342
99#	SM80G11	6	450	450	80	105C	80m	150m	3 0				10m	125J	2 0				1.2k	125J	S91b
100	JAN2N5808	6	475 *		25	80C	100m	120m	4 0				§		1.6			20	200	125S	
101	TG35	6	500		3 0	75C	15m	10m	2 2				750u	100C	2.2	2.5u		10	30	100A	C16z
102▼#	TXC02A50	6	500		3.0	75C	80m	50m	3 0						1 5			50	50	125S	M478
103	Q5004	6	500		5.7	60C	20m	50m	3 0						1 6	3.0u		300	60 §	125J	C121
104	Q5004A	6	500		5 7	60C	20m	50m	3 0						1 6	3 0u		300	60 §	125J	C120
105	Q5004B	6	500		5 7	60C	20m	50m	3 0						1.6	3.0u		300	60 §	125	S307
106	Q5004T	6	500		5.7	60C	20m	50m	3 0						1.6	3.0u		300	60 §	125J	C121
107	Q5004TA	6	500		5 7	60C	20m	50m	3 0						1 6	3.0u		300	60 §	125J	C120
108	Q5004TB	6	500		5.7	60C	20m	50m	3 0						1.6	3.0u		300	60 §	125	S307
109	PF65	6	500		6.0	75C	50m	80m	2 5				2.0m	100C	2 2	2 5u		30	100	100A	M246a
110	SC40E2	6	500		6.0		50m	50m	2 5						1 8			20	74	125S	S330

SYMBOLS AND CODES EXPLAINED IN INTERPRETER

7. MISCELLANEOUS SILICON PNPN DEVICES

IN ORDER OF (1) USE, (2) MAX FWD BKOVER VOLT (3) MAX REV VOLT, (4) MAX CUR, (5) TYPE No.

LINE No	5 TYPE No.	1 USE	2 MAX. FWD BKOVER VBO (V)	3 MAX REV. PRV (V)	MAX CONT. CURRENT 4 If (A)	at TEMP (°C)	MAX. HOLD CUR Ih @ 25°C (A)	MAX GATE ON-OFF RATINGS @ 25°C TURN-ON Igf (A)	Vgf (V)	TURN-OFF Igo (A)	Vgo (V)	Ic (A)	MAX. SAT. CURRENT Is at VBO (A)	at TEMP (°C)	MAX. FWD VOLT. DROP (V)	SWITCHING TIME @25°C Ton (s)	Toff (s)	MIN dV/dt V/us	ABS. MAX. RATINGS PK SRG CUR. (A)	MAX TEMP (°C)	DWG. No.
1	SC40E12	6	500		6 0		50m	50m	2 5						1 8			20	74	125S	S131n
2	SC40E13	6	500		6 0		50m	25m	2 0						1 8			20	74	125S	S131n
3	SC40E14	6	500		6 0		50m	50m	2.5						1 8			20	173	125S	S131n
4	SC40E22	6	500		6 0		50m	50m	2 5						1 8			20	74	125S	S330
5	SC40E23	6	500		6 0		50m	25m	2 0						1 8			20	74	125S	S330
6	SC40E24	6	500		6 0		50m	50m	2 5						1 8			20	173	125S	S330
7	SC40E	6	500		6.0		50m	50m	2 5						1.8			20	74	125S	S131n
8	SC41E12	6	500		6 0		50m	50m	2 5						1 8			20	74	125S	M94d
9	SC41E13	6	500		6.0		50m	25m	2.0						1.8			20	74	125S	M94d
10	SC41E14	6	500		6 0		50m	50m	2 5						1 8			20	173	125S	M94d
11	SC41E	6	500		6 0		50m	50m	2 5						1 8			20	74	125S	M94d
12	SPF65	6	500		6 0	75C	50m	80m	2 5				2.0m	100C	2.2	2 5u		30	100	100A	S131p
13#	TRC6-500A	6	500		6 0	75C	50m	50m							1.8				50	100J	M94
14#	TRC6-500B	6	500		6 0	75C	50m	50m							1 8				50	100J	S131
15▼#	TXC01A50	6	500		6 0	75C	80m	50m	3.0						1 6			50	50	125S	
16	A01023	6	500		6 4	60C	20m	25m	3 0						1 6	3 0u		300	60 §	125J	M507
17	A01043	6	500		6 4	60C	20m	25m	3 0						1 6	3 0u		300	60 §	125J	M507
18	Q5006A	6	500		8 5	60C	20m	50m	3 0						1.6	3.0u		350	80 §	125J	C120
19	Q5006B	6	500		8 5	60C	20m	50m	3.0						1.6	3 0u		350	80 §	125J	S307
20	Q5006TA	6	500		8 5	60C	20m	50m	3 0						1 6	3.0u		350	80 §	125J	C120
21	Q5006TB	6	500		8 5	60C	20m	50m	3.0						1.6	3.0u		350	80 §	125J	S307
22	A01063	6	500		9 2	60C	20m	25m	3 0						1 6	3.0u		350	80 §	125J	M507
23	A01083	6	500		9 2	60C	20m	25m	3.0						1.6	3 0u		350	80 §	125J	M507
24	SC45E2	6	500		10		50m	50m	2.5						1 6			20	90	125S	S330
25	SC45E12	6	500		10		50m	50m	2.5						1 6			20	90	125S	M94d
26	SC45E13	6	500		10		50m	25m	2.0						1.6			20	90	125S	M94d
27	SC45E14	6	500		10		50m	50m	2.5						1.6			20	187	125S	M94d
28	SC45E22	6	500		10		50m	50m	2.5						1 6			20	90	125S	M94d
29	SC45E23	6	500		10		50m	25m	2.0						1.6			20	90	125S	M94d
30	SC45E24	6	500		10		50m	50m	2 5						1.6			20	187	125S	M94d
31	SC45E	6	500		10		50m	50m	2 5						1.6			20	90	125S	S131n
32	SC46E12	6	500		10		50m	50m	2.5						1.6			20	90	125S	M94d
33	SC46E13	6	500		10		50m	25m	2.0						1 6			20	90	125S	M94d
34	SC46E14	6	500		10		50m	50m	2 5						1 6			20	187	125S	M94d
35	SC46E	6	500		10		50m	50m	2 5						1 6			20	90	125S	M94d
36#	TRC10-500A	6	500		10	75C	50m	50m							1 7				80	100J	M94
37#	TRC10-500B	6	500		10	75C	50m	50m							1.7				80	100J	S131
38▼#	TXD99A50	6	500		10	75C	50m	50m	2 5						1 6			20	90	125S	M94d
39	Q5008	6	500		11	60C	35m	50m	3.0						1 6	3.0u		400	100 §	125J	C121
40	Q5008A	6	500		11	60C	35m	50m	3.0						1.6	3.0u		400	100 §	125J	C120
41	Q5008B	6	500		11	60C	35m	50m	3.0						1.6	3 0u		400	100 §	125J	S307
42	Q5008T	6	500		11	60C	35m	50m	3 0						1 6	3.0u		400	100 §	125J	C121
43	Q5008TA	6	500		11	60C	35m	50m	3 0						1.6	3 0u		400	100 §	125J	C120
44	Q5008TB	6	500		11	60C	35m	50m	3.0						1.6	3.0u		400	100 §	125J	S307
45	A01103	6	500		12	60C	35m	25m	3.0						1.6	3 0u		400	100 §	125J	M507
46♦	A01104	6	500		12	60C	35m	25m	3.0						1.6	3 0u		400	100 §	125J	M507
47	A01123	6	500		12	60C	35m	25m	3 0						1 6	3.0u		400	100 §	125J	M507
48	A01143	6	500		14	60C	35m	25m	3.0						1 6	3 0u		400	110 §	125J	M507
49	A01163	6	500		14	60C	35m	25m	3.0						1 6	3.0u		400	110 §	125J	M507
50	Q5010	6	500		14	60C	35m	50m	3.0						1.6	3.0u		400	110 §	125J	C121
51	Q5010A	6	500		14	60C	35m	50m	3 0						1.6	3.0u		400	110 §	125J	C120
52	Q5010B	6	500		14	60C	35m	50m	3.0						1.6	3.0u		400	110 §	125J	S307
53	Q5010T	6	500		14	60C	35m	50m	3.0						1 6	3 0u		400	110 §	125J	C121
54	Q5010TA	6	500		14	60C	35m	50m	3.0						1 6	3.0u		400	110 §	125J	C120
55	Q5010TB	6	500		14	60C	35m	50m	3.0						1 6	3.0u		400	110 §	125J	S307
56	SC50E2	6	500		15		50m	50m	2.5						1.6			20	90	125S	S330
57	SC50E12	6	500		15		50m	50m	2.5						1.6			20	90	125S	S131n
58	SC50E13	6	500		15		50m	25m	2.0						1 6			20	90	125S	S131n
59	SC50E14	6	500		15		50m	50m	2 5						1 6			20	187	125S	S131n
60	SC50E22	6	500		15		50m	50m	2.5						1.6			20	90	125S	S330
61	SC50E23	6	500		15		50m	25m	2.0						1.6			20	90	125S	S330
62	SC50E24	6	500		15		50m	50m	2 5						1 6			20	187	125S	S330
63	SC50E	6	500		15		50m	50m	2 5						1.6			20	90	125S	S131n
64	SC51E12	6	500		15		50m	50m	2.5						1.6			20	90	125S	M94d
65	SC51E13	6	500		15		50m	25m	2.0						1.6			20	90	125S	M94d
66	SC51E14	6	500		15		50m	50m	2.5						1.6			20	187	125S	M94d
67	SC51E	6	500		15		50m	50m	2 5						1 6			20	90	125S	M94d
68#	TRC15-500A	6	500		15	75C	50m	50m							1 7				100	100J	M94
69#	TRC15-500B	6	500		15	75C	50m	50m							1 7				100	100J	S131
70▼#	TXD98A50	6	500		15	80C	50m	50m	2.5						1 6			20	90	125S	M94d
71	TIC250E	6	500		20	70		100m	3.0				4.0m	110	2 0			5.0	200	70	M94c
72	TIC252E	6	500		20	70		100m	3.0				4.0m	110	2.0			5 0	200	70	S131d
73	Q5015	6	500		21	60C	35m	50m	3 0						1.6	4.0u		450	150 §	125J	C121
74	Q5015A	6	500		21	60C	35m	50m	3.0						1.6	4 0u		450	150 §	125J	C120
75	Q5015B	6	500		21	60C	35m	50m	3.0						1.6	4.0u		450	150 §	125J	S307
76	Q5015T	6	500		21	60C	35m	50m	3.0						1 6	4.0u		450	150 §	125J	C121
77	Q5015TA	6	500		21	60C	35m	50m	3 0						1 6	4.0u		450	150 §	125J	C120
78	Q5015TB	6	500		21	60C	35m	50m	3 0						1.6	4.0u		450	150 §	125J	S307
79	A01183	6	500		22	60C	35m	50m	3.0						1 6	4 0u		450	150 §	125J	M507
80	A01203	6	500		22	60C	35m	50m	3.0						1.6	4.0u		450	150 §	125J	M507
81	Q5025	6	500		25	80C	35m	80m	3.0						1.6	4 0u		450	230 §	125J	M505
82	Q5025C	6	500		25	80C	35m	80m	3.0						1 6	4 0u		450	230 §	125J	M504
83	Q5025D	6	500		25	80C	35m	80m	3.0						1.6	4 0u		450	230 §	125J	S308
84	SC60E	6	500		25	80C	100m	50m	2.5						1.4			5 0	250	115J	S131e
85	SC61E	6	500		25	80C	100m	50m	2.5						1 4			5.0	250	115J	S131f
86	TIC260E	6	500		25	70		100m	3.0				4 0m	110	1.7			5.0	250	70	M94c
87	TIC262E	6	500		25	70		100m	3.0				4.0m	110	1.7			5.0	250	70	S131d
88▼#	TXE99A50	6	500		25	80C	100m	50m	2.5						1 4			5.0	250	115J	S131f
89	TIC270E	6	500		40	70		100m	3.0				4.0m	110	1.7			5.0	400	70	M94c
90	TIC272E	6	500		40	70		100m	3.0				4.0m	110	1.7			5 0	400	70	S131d
91	Q5040PF	6	500		57	60C	35m	100m	3.0						1.6	5.0u		500	300 §	125J	M505
92	Q5040PFC	6	500		57	60C	35m	100m	3.0						1.6	5.0u		500	300 §	125J	M504
93	Q5040PFD	6	500		57	60C	35m	100m	3.0						1.6	5 0u		500	300 §	125J	S308
94	60AC40	6	500 ∅	400	60	85C	500m	500	2.5				10m$	125C	2.0 †			25	1.1k△*	125J	TO94
95	100AC40	6	500 ∅	400	100	75C	500m	500	2.5				10m$	125C	1.9 †			50	1 3k△*	125J	TO94
96#	TAG302-500	6	500 ∅	500	2.0m	70C	3.0m∅	25m	2.0				1.0m	105	1.7				25	105	TO5
97	BTD0150	6	500	500	1.0	75	25m	25m	2 0				3.0m	100	1.5	20u		10p	15	100C	TO5
98	BTD0250	6	500	500	3.0	75	50m	25m	2.0				3.0m	100	1 9	20u		10p	15	100C	TO5
99	BTR0250	6	500	500	3.0	75	50m	50m	3.0				3.0m	100	1.5	20u		10p	40	100C	TO66
100	BTS0250	6	500	500	3.0	75	50m	50m	3 0				3.0m	100	1.5	20u		10p	40	100C	M94
101▼	BTD0350	6	500	500	6.0	80C	50	50	3.0				5 0m	100C	1.9	2.0u		10	100	100C	Z57
102	BTR0350	6	500	500	6.0	75	50m	50m	3 0				5.0m	100	1 9	.20u		10p	60	100C	TO66
103	BTS0350	6	500	500	6 0	75	50m	50m	3.0				5 0m	100	1.9	20u		10p	60	100C	M94
104	BTU0350	6	500	500	6.0	75	50m	50m	3.0				5.0m	100	1.9	20u		10p	60	100C	S131
105	TIC220E	6	500	500	6.0	70C		50m	3.0				1.0m	125	1.8			500	50	125A	M94d
106	TIC221E	6	500	500	6.0	70C		50m	3 0				1 0m	125	1.8			500	50	125A	S291
107	TIC222E	6	500	500	6.0	70C		50m	3.0				1.0m	125	1.8			500	50	125A	S131g
108	BTR0450	6	500	500	10	75	50m	100m	3.0				5.0m	100	1.5	.20u		10p	100	100C	TO66
109	BTS0450	6	500	500	10	75	50m	100m	3.0				5.0m	100	1.5	.20u		10p	100	100C	M94
110	BTU0450	6	500	500	10	75	50m	100m	3.0				5.0m	100	1.5	.20u		10p	100	100C	S131

SYMBOLS AND CODES EXPLAINED IN INTERPRETER

7. MISCELLANEOUS SILICON PNPN DEVICES

IN ORDER OF (1) USE, (2) MAX FWD BKOVER VOLT (3) MAX REV VOLT, (4) MAX CUR, (5) TYPE No.

LINE No.	5 TYPE No.	1 USE	2 MAX. FWD. BKOVER VBO (V)	3 MAX. REV. PRV (V)	MAX CONT. CURRENT 4 If (A)	at TEMP (°C)	MAX. HOLD CUR Ih @ 25°C (A)	MAX GATE ON-OFF RATINGS @ 25°C TURN-ON Igf (A)	Vgf (V)	TURN-OFF Igo (A)	Vgo (V)	Ic (A)	MAX. SAT. CURRENT Is at VBO (A)	at TEMP (°C)	MAX. FWD. VOLT. DROP (V)	SWITCHING TIME @25°C Ton (s)	Toff (s)	MIN dV/dt V/us	ABS. MAX. RATINGS PK SRG CUR. (A)	MAX TEMP (°C)	DWG. No.
1▼	MAC1-7	6	500	500	10	75	30m	40m	2.0						1.8	1 5u		5.0	100 △	100	C84
2▼	MAC2-7	6	500	500	10	75	30m	40m	2.0						1.8	1 5u		5.0	100 △	100	S230
3▼	MAC3-7	6	500	500	10	75	30m	40m	2.0						1.8	1.5u		5.0	100 △	100	C85
4▼	MAC4-7	6	500	500	10	75	50m	50m	2.5						1.8	1.5u		5.0	100 △	100	C84
5▼	MAC5-7	6	500	500	10	75	50m	50m	2 5						1.8	1.5u		5.0	100 △	100	S230
6▼	MAC6-7	6	500	500	10	75	50m	50m	2.5						1.8	1.5u		5.0	100 △	100	C85
7	TIC230E	6	500	500	10	70C		50m	3.0				1.0m	125	1.6			500	80	125A	M94d
8	TIC231E	6	500	500	10	70C		50m	3.0				1.0m	125	1.6			500	80	125A	S291
9	TIC232E	6	500	500	10	70C		50m	3.0				1.0m	125	1.6			500	80	125A	S131g
10	BTS0550	6	500	500	15	75	50m	100m	3.0				5.0m	100	1.9	.20u		10p	150	100C	M94
11	BTU0550	6	500	500	15	75	50m	100m	3.0				5 0m	100	1.9	.20u		10p	150	100C	S131
12	TIC240E	6	500	500	15	70C		50m	3.0				1.0m	125	1.6			500	100	125A	M94d
13#	BCR25A10L	6	500	500	25	90C		50m	3.0				5.0m	125J	1.6 †			20	220	125J	S309
14#	BCR25A10R	6	500	500	25	90C		50m	3.0				5 0m	125J	1.6 †				220	125J	S309
15	BTU0650	6	500	500	25	75	100m	100m	3.0				5 0m	100	1.9	.20u		10p	200	100C	S131
16#	BTX94-500	6	500	500	25	85C		100m	3.0				8.0m	125J	2.3			100	200 §	125J	TO48
17	MAC35-7	6	500	500	25	67C	75m	100m	3.0				4.0	110J		1.0u		100 ∅	225 §	110J	M94b
18	MAC36-7	6	500	500	25	67C	75m	100m	3.0				4.0	110J		1.0u		100 ∅	225 §	110J	S131k
19	MAC37-7	6	500	500	25	67C	75m	75m	3.0				4.0m	110J	1.5	1.0u		100	225 §	110J	M94h
20	MAC38-7	6	500	500	25	67C	75m	3 0					4.0m	110J	1.5	1 0u		100	225 §	110J	S131m
21	TIC241E	6	500	600	15	70C		50m	3.0				1 0m	125	1 6			500	100	125A	S291
22	JAN2N5809	6	570 *		25	80C	100m	120m	4.0			§			1 6			20	200	125S	
23	40687	6	600		2.5	70C	35m	25m	2 2						2.6			10	25	100C	M466
24	TG36	6	600		3.0	75C	15m	10m	2.2				750u	100C	2.2	2.5u		10	30	100A	C16z
25▼#	TXC02A60	6	600		3.0	75C	80m	50m	3.0						1.5			50	50	125S	M478
26	Q6004	6	600		5.7	60C	20m	50m	3.0						1.6	3.0u		300	60 §	125J	C121
27	Q6004A	6	600		5 7	60C	20m	50m	3.0						1.6	3.0u		300	60 §	125J	C120
28	Q6004B	6	600		5 7	60C	20m	50m	3.0						1 6	3 0u		300	60 §	125	S307
29	Q6004T	6	600		5 7	60C	20m	50m	3.0						1.6	3.0u		300	60 §	125J	C121
30	Q6004TA	6	600		5.7	60C	20m	50m	3.0						1.6	3.0u		300	60 §	125J	C120
31	Q6004TB	6	600		5.7	60C	20m	50m	3.0						1.6	3.0u		300	60 §	125	S307
32	PF66	6	600		6 0	75C	50m	80m	2.5				2 0m	100C	2.2	2.5u		30	100	100A	M246a
33	SPF66	6	600		6.0	75C	50m	80m	2.5				2 0m	100C	2.2	2.5u		30	100	100A	S131p
34#	TRC6-600A	6	600		6 0	75C	50m	50m							1.8				50	100J	M94
35#	TRC6-600B	6	600		6 0	75C	50m	50m							1 8				50	100J	S131
36▼#	TXC01A60	6	600		6.0	75C	80m	50m	3.0						1.6			50	50	125S	
37	A01024	6	600		6 4	60C	20m	25m	3 0						1 6	3.0u		300	60 §	125J	M507
38	A01044	6	600		6.4	60C	20m	25m	3.0						1 6	3 0u		300	60 §	125J	M507
39	Q6006A	6	600		8 5	60C	20m	50m	3.0						1 6	3 0u		350	80 §	125J	C120
40	Q6006B	6	600		8 5	60C	20m	50m	3.0						1.6	3 0u		350	80 §	125J	S307
41	Q6006TA	6	600		8 5	60C	20m	50m	3.0						1.6	3 0u		350	80 §	125J	C120
42	Q6006TB	6	600		8 5	60C	20m	50m	3 0						1 6	3.0u		350	80 §	125J	S307
43	A01064	6	600		9.2	60C	20m	25m	3.0						1.6	3.0u		350	80 §	125J	M507
44	A01084	6	600		9 2	60C	20m	25m	3 0						1.6	3.0u		350	80 §	125J	M507
45#	TRC10-600A	6	600		10	75C	50m	50m							1.7				80	100J	M94
46#	TRC10-600B	6	600		10	75C	50m	50m							1 7				80	100J	S131
47	Q6008	6	600		11	60C	35m	50m	3 0						1.6	3.0u		400	100 §	125J	C121
48	Q6008A	6	600		11	60C	35m	50m	3 0						1 6	3 0u		400	100 §	125J	C120
49	Q6008B	6	600		11	60C	35m	50m	3 0						1 6	3 0u		400	100 §	125J	S307
50	Q6008T	6	600		11	60C	35m	50m	3 0						1 6	3 0u		400	100 §	125J	C121
51	Q6008TA	6	600		11	60C	35m	50m	3 0						1 6	3 0u		400	100 §	125J	C120
52	Q6008TB	6	600		11	60C	35m	50m	3 0						1 6	3 0u		400	100 §	125J	S307
53	A01124	6	600		12	60C	35m	25m	3 0						1.6	3 0u		400	100 §	125J	M507
54	A01144	6	600		14	60C	35m	25m	3 0						1.6	3.0u		400	110 §	125J	M507
55	A01164	6	600		14	60C	35m	25m	3 0						1 6	3 0u		400	110 §	125J	M507
56	Q6010	6	600		14	60C	35m	50m	3 0						1 6	3.0u		400	110 §	125J	C121
57	Q6010A	6	600		14	60C	35m	50m	3 0						1 6	3 0u		400	110 §	125J	C120
58	Q6010B	6	600		14	60C	35m	50m	3.0						1.6	3.0u		400	110 §	125J	S307
59	Q6010T	6	600		14	60C	35m	50m	3.0						1.6	3 0u		400	110 §	125J	C121
60	Q6010TA	6	600		14	60C	35m	50m	3 0						1.6	3 0u		400	110 §	125J	C120
61	Q6010TB	6	600		14	60C	35m	50m	3 0						1.6	3 0u		400	110 §	125J	S307
62#	TRC15-600A	6	600		15	75C	50m	50m							1 7				100	100J	M94
63#	TRC15-600B	6	600		15	75C	50m	50m							1.7				100	100J	S131
64	TIC250M	6	600		20	70		100m	3 0				4 0m	110	2 0			5.0	200	70	M94c
65	TIC252M	6	600		20	70		100m	3 0				4 0m	110	2.0			5.0	200	70	S131d
66	Q6015	6	600		21	60C	35m	50m	3 0						1.6	4 0u		450	150 §	125J	C121
67	Q6015A	6	600		21	60C	35m	50m	3 0						1 6	4 0u		450	150 §	125J	C120
68	Q6015B	6	600		21	60C	35m	50m	3 0						1.6	4 0u		450	150 §	125J	S307
69	Q6015T	6	600		21	60C	35m	50m	3 0						1 6	4 0u		450	150 §	125J	C121
70	Q6015TA	6	600		21	60C	35m	50m	3 0						1.6	4.0u		450	150 §	125J	C120
71	Q6015TB	6	600		21	60C	35m	50m	3.0						1.6	4.0u		450	150 §	125J	S307
72	A01184	6	600		22	60C	35m	50m	3 0						1 6	4 0u		450	150 §	125J	M507
73	A01204	6	600		22	60C	35m	50m	3 0						1.6	4 0u		450	150 §	125J	M507
74	Q6025	6	600		25	80C	35m	80m	3 0						1 6	4.0u		450	230 §	125J	M505
75	Q6025C	6	600		25	80C	35m	80m	3 0						1 6	4.0u		450	230 §	125J	M504
76	Q6025D	6	600		25	80C	35m	80m	3 0						1 6	4.0u		450	230 §	125J	S308
77	TIC260M	6	600		25	70		100m	3 0				4 0m	110	1 7			5.0	250	70	M94c
78	TIC262M	6	600		25	70		100m	3 0				4 0m	110	1.7			5 0	250	70	S131d
79	TIC270M	6	600		40	70		100m	3 0				4.0m	110	1.7			5.0	400	70	M94c
80	TIC272M	6	600		40	70		100m	3 0				4 0m	110	1 7			5 0	400	70	S131d
81	Q6040PF	6	600		57	60C	35m	100m	3 0						1 6	5.0u		500	300 §	125J	M505
82	Q6040PFC	6	600		57	60C	35m	100m	3 0						1 6	5 0u		500	300 §	125J	M504
83	Q6040PFD	6	600		57	60C	35m	100m	3.0						1.6	5 0u		500	300 §	125J	S308
84▼#	FR500AW12	6	600	0.0	400	71C							50m	125J	2.4	6.0u∅	50u§	300	7.0k△	125J	M566
85▼#	FR500AX12	6	600	0.0	400	71C							50m	125J	2.4	6.0u∅	30u§	300	7.0k△	125J	M566
86▼#	FR500AY12	6	600	0.0	400	71C							50m	125J	2.4	6 0u∅	15u§	200	7 0k△	125J	M566
87#	TAG302-600	6	600 ∅	600	2 0m	70C	3 0m∅	25m	2.0				1.0m	105	1 7				25	105	TO5
88#	TAG306-600	6	600 ∅	600	6 0m	70C	50m	50m	4 0				1 5m	105	1.7				60	105	TO66
89#	TAG307-600	6	600 ∅	600	6 0m	70C	50m	50m	4 0				1 5m	105	1.7				60	105	TO48
90#	TAG310-600	6	600 ∅	600	10m	70C	50m	10	4 0				1 5m	105	1 4				100	105	TO48
91	BTD0160	6	600	600	1 0	75	25m	25m	2 0				3.0m	100	1.5	.20u		10p	15	100C	TO5
92	BTD0260	6	600	600	3 0	75	50m	25m	2 0				3 0m	100	1 9	.20u		10p	15	100C	TO5
93	BTR0260	6	600	600	3 0	75	50m	50m	3 0				3 0m	100	1 5	.20u		10p	40	100C	TO66
94	BTS0260	6	600	600	3 0	75	50m	50m	3 0				3 0m	100	1 5	.20u		10p	40	100C	M94
95▼	BTD0360	6	600	600	6 0	80C	50	50	3 0				5.0m	100C	1.9	2 0u		10	100	100C	Z57
96	BTR0360	6	600	600	6 0	75	50m	50m	3 0				5 0m	100	1 9	20u		10p	60	100C	TO66
97	BTS0360	6	600	600	6 0	75	50m	50m	3 0				5 0m	100	1 9	.20u		10p	60	100C	M94
98	BTU0360	6	600	600	6 0	75	50m	50m	3 0				5.0m	100	1.9	.20u		10p	60	100C	S131
99▼	40795	6	600	600	10	85C	30m	25m	2 5				2 0m	100J	1.6	2.5u		10	100	100C	M94f
100▼	40796	6	600	600	10	85C	30m	25m	2 5				2.0m	100J	1.6	2.5u		10	100	100C	S131k
101▼	40801	6	600	600	10	85C	30m	25m	2.5				2 0m	100J	1 6	2 5u		10	100	100C	S304
102	BTR0460	6	600	600	10	75	50m	100m	3 0				5 0m	100	1 5	20u		10p	100	100C	TO66
103	BTS0460	6	600	600	10	75	50m	100m	3 0				5 0m	100	1.5	.20u		10p	100	100C	M94
104	BTU0460	6	600	600	10	75	50m	100m	3 0				5.0m	100	1.5	20u		10p	100	100C	S131
105	BTV0460	6	600	600	10	75	50m	100m	3 0				5 0m	100	155	.20u		10p	100	100C	S291
106▼	MAC1-8	6	600	600	10	75	30m	40m	2 0						1 8	1 5u		5 0	100 △	100	C84
107▼	MAC2-8	6	600	600	10	75	30m	40m	2 0						1.8	1.5u		5.0	100 △	100	S230
108▼	MAC3-8	6	600	600	10	75	30m	40m	2 0						1 8	1.5u		5.0	100 △	100	C85
109▼	MAC4-8	6	600	600	10	75	50m	50m	2 5						1 8	1 5u		5.0	100 △	100	C84
110▼	MAC5-8	6	600	600	10	75	50m	50m	2 5						1 8	1.5u		5.0	100 △	100	S230

SYMBOLS AND CODES EXPLAINED IN INTERPRETER

7. MISCELLANEOUS SILICON PNPN DEVICES

IN ORDER OF (1) USE, (2) MAX FWD BKOVER VOLT (3) MAX REV VOLT, (4) MAX CUR, (5) TYPE No.

LINE No	5 TYPE No.	1 USE	2 MAX. FWD. BKOVER VBO (V)	3 MAX. REV. PRV (V)	MAX CONT. CURRENT 4 If (A)	at TEMP (°C)	MAX. HOLD CUR Ih @ 25°C (A)	MAX GATE ON-OFF RATINGS @ 25°C TURN-ON Igf (A)	Vgf (V)	TURN-OFF Igo (A)	Vgo (V)	Ic (A)	MAX. SAT. CURRENT Is at VBO (A)	at TEMP (°C)	MAX. FWD. VOLT. DROP (V)	SWITCHING TIME @25°C Ton (s)	Toff (s)	MIN dV/dt V/us	ABS. MAX. RATINGS PK SRG CUR. (A)	MAX TEMP (°C)	DWG. No.
1▼	MAC6-8	6	600	600	10	75	50m	50m	2.5						1.8	1.5u		5.0	100 △	100	C85
2▼	40797	6	600	600	15	80C	75m	50m	2 5				2 0m	100J	1.8	2 5u		10	100	100C	M94f
3▼	40798	6	600	600	15	80C	75m	50m	2 5				2.0m	100J	1 8	2.5u		10	100	100C	S131k
4▼	40804	6	600	600	15	75C	75m	50m	2.5				2.0m	100J	1.8	2 5u		10	100	100C	S304
5▼	40807	6	600	600	15	55C	60m	50m	2 5				4.0m	100J	2.5	3.0u		20	300	100C	S304a
6	BTS0560	6	600	600	15	75	50m	100m	3 0				5 0m	100	1.9	.20u		10p	150	100C	M94
7	BTU0560	6	600	600	15	75	50m	100m	3 0				5.0m	100	1.9	.20u		10p	150	100C	S131
8	2N5275	6	600	600	25	60C	100m§	150m	3 5				1.0m	125C	1.7				400	125C	TO48
9	BTU0660	6	600	600	25	75	100m	100m	3.0				5.0m	100	1 9	.20u		10p	200	100C	S131
10#	BTX94-600	6	600	600	25	85C		100m	3 0				8 0m	125J	2.3			100	200 §	125J	TO48
11♦	40671	6	600	600	30	65	60m	50m	2 5				4.0m	100J	2.5	3 0u		20	300	100C	M94f
12♦	40672	6	600	600	30	60C	60m	50m	2 5				4.0m	100J	2.5	3 0u		20	300	100C	S131k
13	40709	6	600	600	30	65C	25m	45m	1 5											85A	M94
14	40710	6	600	600	30	60C	25m	45m	1.5											85A	S131
15▼	40690	6	600	600	40	60C	60m	50m	2.5				4.0m	110J	1 8	3.0u		20	300	110C	S304a
16	40701	6	600	600	40	70C	25m	45m	1.5											85A	M94
17	40704	6	600	600	40	65C	25m	45m	1 5											85A	S131
18#	BCR70A12	6	600	600	70	78C		200m	4 0				15m	125J	2.1			100	800 △	125J	S332
19#	BCR150A12	6	600	600	150	81C		350m	3.5				15m	125J	2.3			20	2.0k	125J	S237e
20	2N5258	6	600	600	200	65C	850m§	800m	3 0				15m	125C	2.1				1.3k§	125C	TO93
21▼#	BCR300A12	6	600	600	300	72C		400m	4.0				30m	125J	2.0			100	3.0k△	125J	S351
22	Q7004	6	700		5 7	60C	20m	50m	3 0						1.6	3 0u		300	60 §	125J	C121
23	Q7004A	6	700		5 7	60C	20m	50m	3 0						1.6	3.0u		300	60 §	125J	C120
24	Q7004B	6	700		5.7	60C	20m	50m	3.0						1.6	3 0u		300	60 §	125	S307
25	Q7004T	6	700		5 7	60C	20m	50m	3.0						1.6	3 0u		300	60 §	125J	C121
26	Q7004TA	6	700		5 7	60C	20m	50m	3 0						1.6	3.0u		300	60 §	125J	C120
27	Q7004TB	6	700		5 7	60C	20m	50m	3 0						1.6	3 0u		300	60 §	125	S307
28	PF67	6	700		6 0	75C	50m	80m	2.5				2 0m	100C	2.2	2.5u		30	100	100A	M246a
29	SPF67	6	700		6 0	75C	50m	80m	2 5				2 0m	100C	2.2	2 5u		30	100	100A	S131p
30	A01025	6	700		6 4	60C	20m	25m	3 0						1 6	3.0u		300	60 §	125J	M507
31	A01045	6	700		6 4	60C	20m	25m	3 0						1 6	3 0u		300	60 §	125J	M507
32	Q7006A	6	700		8.5	60C	20m	50m	3 0						1 6	3 0u		350	80 §	125J	C120
33	Q7006B	6	700		8 5	60C	20m	50m	3 0						1.6	3 0u		350	80 §	125J	S307
34	Q7006TA	6	700		8 5	60C	20m	50m	3.0						1 6	3.0u		350	80 §	125J	C120
35	Q7006TB	6	700		8.5	60C	20m	50m	3.0						1 6	3 0u		350	80 §	125J	S307
36	A01065	6	700		9 2	60C	20m	25m	3.0						1.6	3 0u		350	80 §	125J	M507
37	A01085	6	700		9.2	60C	20m	25m	3 0						1 6	3 0u		350	80 §	125J	M507
38	Q7008	6	700		11	60C	35m	50m	3.0						1.6	3.0u		400	100 §	125J	C121
39	Q7008A	6	700		11	60C	35m	50m	3.0						1 6	3.0u		400	100 §	125J	C120
40	Q7008B	6	700		11	60C	35m	50m	3.0						1.6	3 0u		400	100 §	125J	S307
41	Q7008T	6	700		11	60C	35m	50m	3 0						1.6	3.0u		400	100 §	125J	C121
42	Q7008TA	6	700		11	60C	35m	50m	3.0						1.6	3 0u		400	100 §	125J	C120
43	Q7008TB	6	700		11	60C	35m	50m	3 0						1.6	3.0u		400	100 §	125J	S307
44	A01105	6	700		12	60C	35m	25m	3 0						1 6	3 0u		400	100 §	125J	M507
45	A01125	6	700		12	60C	35m	25m	3 0						1.6	3 0u		400	100 §	125J	M507
46	A01145	6	700		14	60C	35m	25m	3.0						1 6	3.0u		400	110 §	125J	M507
47	A01165	6	700		14	60C	35m	25m	3 0						1 6	3 0u		400	110 §	125J	M507
48	Q7010	6	700		14	60C	35m	50m	3.0						1.6	3.0u		400	110 §	125J	C121
49	Q7010A	6	700		14	60C	35m	50m	3.0						1.6	3.0u		400	110 §	125J	C120
50	Q7010B	6	700		14	60C	35m	50m	3 0						1.6	3.0u		400	110 §	125J	S307
51	Q7010T	6	700		14	60C	35m	50m	3 0						1 6	3.0u		400	110 §	125J	C121
52	Q7010TA	6	700		14	60C	35m	50m	3 0						1 6	3 0u		400	110 §	125J	C120
53	Q7010TB	6	700		14	60C	35m	50m	3.0						1.6	3 0u		400	110 §	125J	S307
54	Q7015	6	700		21	60C	35m	50m	3.0						1.6	4.0u		450	150 §	125J	C121
55	Q7015A	6	700		21	60C	35m	50m	3 0						1.6	4.0u		450	150 §	125J	C120
56	Q7015B	6	700		21	60C	35m	50m	3 0						1 6	4.0u		450	150 §	125J	S307
57	Q7015T	6	700		21	60C	35m	50m	3 0						1.6	4.0u		450	150 §	125J	C121
58	Q7015TA	6	700		21	60C	35m	50m	3 0						1.6	4.0u		450	150 §	125J	C120
59	Q7015TB	6	700		21	60C	35m	50m	3.0						1.6	4 0u		450	150 §	125J	S307
60	A01185	6	700		22	60C	35m	50m	3.0						1.6	4.0u		450	150 §	125J	M507
61	A01205	6	700		22	60C	35m	50m	3 0						1.6	4.0u		450	150 §	125J	M507
62	Q7025	6	700		25	80C	35m	80m	3.0						1 6	4 0u		450	230 §	125J	M505
63	Q7025C	6	700		25	80C	35m	80m	3.0						1 6	4 0u		450	230 §	125J	M504
64	Q7025D	6	700		25	80C	35m	80m	3 0						1.6	4.0u		450	230 §	125J	S308
65▼	MAC3-1	6	700	25	10	75	30m	40m	2 0						1.8	1 5u		5.0	100 △	100	C85
66	60AC60	6	700 ⊘	600	60	85C	500m	500	2 5				10m$	125C	2.0 †			25	1.1k△*	125J	TO94
67	100AC60	6	700 ⊘	600	100	75C	500m	500	2.5				10m$	125C	1.9 †			50	1.3k△*	125J	TO94
68#	BTX94-700	6	700	700	25	85C		100m	3 0				8 0m	125J	2.3			100	200 §	125J	TO48
69	Q8004	6	800		5 7	60C	20m	50m	3 0						1.6	3.0u		300	60 §	125J	C121
70	Q8004A	6	800		5.7	60C	20m	50m	3 0						1 6	3.0u		300	60 §	125J	C120
71	Q8004B	6	800		5.7	60C	20m	50m	3 0						1.6	3.0u		300	60 §	125	S307
72	Q8004T	6	800		5.7	60C	20m	50m	3.0						1.6	3.0u		300	60 §	125J	C121
73	Q8004TA	6	800		5 7	60C	20m	50m	3 0						1 6	3.0u		300	60 §	125J	C120
74	Q8004TB	6	800		5 7	60C	20m	50m	3 0						1.6	3.0u		300	60 §	125J	S307
75	PF68	6	800		6.0	75C	50m	80m	2.5				2.0m	100C	2 2	2.5u		30	100	100A	M246a
76	SPF68	6	800		6 0	75C	50m	80m	2.5				2.0m	100C	2.2	2.5u		30	100	100A	S131p
77	A01026	6	800		6 4	60C	20m	25m	3 0						1 6	3 0u		300	60 §	125J	M507
78	A01046	6	800		6 4	60C	20m	25m	3.0						1 6	3.0u		300	60 §	125J	M507
79	Q8006A	6	800		8 5	60C	20m	50m	3 0						1.6	3.0u		350	80 §	125J	C120
80	Q8006B	6	800		8.5	60C	20m	50m	3 0						1.6	3 0u		350	80 §	125J	S307
81	Q8006TA	6	800		8 5	60C	20m	50m	3 0						1 6	3.0u		350	80 §	125J	C120
82	Q8006TB	6	800		8.5	60C	20m	50m	3.0						1.6	3.0u		350	80 §	125J	S307
83	A01066	6	800		9 2	60C	20m	25m	3 0						1.6	3.0u		350	80 §	125J	M507
84	A01086	6	800		9 2	60C	20m	25m	3.0						1.6	3.0u		350	80 §	125J	M507
85	Q8008	6	800		11	60C	35m	50m	3.0						1.6	3.0u		400	100 §	125J	C121
86	Q8008A	6	800		11	60C	35m	50m	3.0						1.6	3.0u		400	100 §	125J	C120
87	Q8008B	6	800		11	60C	35m	50m	3.0						1 6	3 0u		400	100 §	125J	S307
88	Q8008T	6	800		11	60C	35m	50m	3 0						1.6	3.0u		400	100 §	125J	C121
89	Q8008TA	6	800		11	60C	35m	50m	3.0						1 6	3.0u		400	100 §	125J	C120
90	Q8008TB	6	800		11	60C	35m	50m	3.0						1 6	3.0u		400	100 §	125J	S307
91	A01106	6	800		12	60C	35m	25m	3 0						1.6	3 0u		400	100 §	125J	M507
92	A01126	6	800		12	60C	35m	25m	3 0						1.6	3.0u		400	100 §	125J	M507
93	A01146	6	800		14	60C	35m	25m	3.0						1 6	3.0u		400	110 §	125J	M507
94	A01166	6	800		14	60C	35m	25m	3 0						1.6	3.0u		400	110 §	125J	M507
95	Q8010	6	800		14	60C	35m	50m	3.0						1.6	3 0u		400	110 §	125J	C121
96	Q8010A	6	800		14	60C	35m	50m	3 0						1.6	3.0u		400	110 §	125J	C120
97	Q8010B	6	800		14	60C	35m	50m	3 0						1.6	3.0u		400	110 §	125J	S307
98	Q8010T	6	800		14	60C	35m	50m	3 0						1.6	3.0u		400	110 §	125J	C121
99	Q8010TA	6	800		14	60C	35m	50m	3.0						1.6	3.0u		400	110 §	125J	C120
100	Q8010TB	6	800		14	60C	35m	50m	3.0						1.6	3 0u		400	110 §	125J	S307
101	Q8015	6	800		21	60C	35m	50m	3.0						1.6	4 0u		450	150 §	125J	C121
102	Q8015A	6	800		21	60C	35m	50m	3 0						1.6	4.0u		450	150 §	125J	C120
103	Q8015B	6	800		21	60C	35m	50m	3.0						1.6	4.0u		450	150 §	125J	S307
104	Q8015T	6	800		21	60C	35m	50m	3 0						1.6	4 0u		450	150 §	125J	C121
105	Q8015TA	6	800		21	60C	35m	50m	3.0						1.6	4 0u		450	150 §	125J	C120
106	Q8015TB	6	800		21	60C	35m	50m	3.0						1.6	4.0u		450	150 §	125J	S307
107	A01186	6	800		22	60C	35m	50m	3 0						1.6	4.0u		450	150 §	125J	M507
108	A01206	6	800		22	60C	35m	50m	3.0						1.6	4.0u		450	150 §	125J	M507
109	Q8025	6	800		25	80C	35m	80m	3.0						1.6	4.0u		450	230 §	125J	M505
110	Q8025C	6	800		25	80C	35m	80m	3 0						1.6	4.0u		450	230 §	125J	M504

SYMBOLS AND CODES EXPLAINED IN INTERPRETER

7. MISCELLANEOUS SILICON PNPN DEVICES

IN ORDER OF (1) USE, (2) MAX FWD BKOVER VOLT (3) MAX REV VOLT, (4) MAX CUR, (5) TYPE No.

LINE No	5 TYPE No.	1 USE	2 MAX. FWD. BKOVER VBO (V)	3 MAX. REV. PRV (V)	MAX CONT. CURRENT 4 If (A)	at TEMP (°C)	MAX. HOLD CUR Ih @ 25°C (A)	MAX GATE ON-OFF RATINGS @ 25°C TURN-ON Igf (A)	Vgf (V)	TURN-OFF Igo (A)	Vgo (V)	Ic (A)	MAX. SAT. CURRENT Is at VBO (A)	at TEMP (°C)	MAX. FWD. VOLT. DROP (V)	SWITCHING TIME @25°C Ton (s)	Toff (s)	MIN dV/dt V/us	ABS. MAX. RATINGS PK SRG CUR. (A)	MAX TEMP (°C)	DWG. No
1	Q8025D	6	800		25	80C	35m	80m	3 0						1.6	4 0u		450	230 §	125J	S308
2▼#	FR500AW16	6	800	0 0	400	71C							50m	125J	2.4	6 0u⊘	50u§	300	7.0kΔ	125J	M566
3▼#	FR500AX16	6	800	0 0	400	71C							50m	125J	2 4	6.0u⊘	30u§	300	7.0kΔ	125J	M566
4▼#	FR500AY16	6	800	0 0	400	71C							50m	125J	2 4	6 0u⊘	15u§	200	7.0kΔ	125J	M566
5#	TAG307-800	6	800 Ø	800	6 0m	70C	50m	50m	4 0				1.5m	105	1 7				60	105	TO48
6#	TAG310-800	6	800 Ø	800	10m	70C	50m	10	4.0				1 5m	105	1.4				100	105	TO48
7#	BTX94-800	6	800	800	25	85C		100m	3.0				8 0m	125J	2.3			100	200 §	125J	TO48
8▼#	BCR70A16	6	800	800	70	78C		200m	4.0				15m	125J	2 1			100	800 Δ	125J	S332
9#	BCR150A16	6	800	800	150	81C		350m	3.5				15m	125J	2 3			20	2 0k	125J	S237e
10	2N5259	6	800	800	200	65C	850m§	800m	3.0				15m	125C	2 1				1.3k§	125C	TO93
11▼#	BCR300A16	6	800	800	300	72C		400m	4 0				30m	125J	2 0			100	3.0kΔ	125J	S351
12	60AC80	6	900 ⊘	800	60	85C	500m	500	2 5				10m$	125C	2 0 †			25	1 1kΔ*	125J	TO94
13	100AC80	6	900 ⊘	800	100	75C	500m	500	2 5				10m$	125C	1 9 †			50	1 3kΔ*	125J	TO94
14▼#	FR500AW20	6	1 0k	0.0	400	71C							50m	125J	2 4	6 0u⊘	50u§	300	7 0kΔ	125J	M566
15▼#	FR500AX20	6	1.0k	0 0	400	71C							50m	125J	2 4	6.0u⊘	30u§	300	7 0kΔ	125J	M566
16▼#	BTX94-1000	6	1 0k	1 0k	25	85C		150m	3 0				8.0m	125J	2 3	1 5u		100	250 *	125J	TO48
17▼#	BCR70A20	6	1 0k	1 0k	70	78C		200m	4 0				15m	125J	2 1			100	800 Δ	125J	S332
18#	BCR150A20	6	1 0k	1 0k	150	81C		350m	3.5				15m	125J	2.3			20	2 0k	125J	S237e
19	2N5260	6	1 0k	1 0k	200	65C	850m§	800m	3 0				15m	125C	2 1				1 3k§	125C	TO93
20▼#	BCR300A20	6	1 0k	1 0k	300	72C		400m	4.0				30m	125J	2 0			100	3.0kΔ	125J	S351
21	60AC100	6	1 1k⊘	1.0k	60	85C	500m	500	2 5				10m$	125C	2.0 †			25	1 1kΔ*	125J	TO94
22	100AC100	6	1 1k⊘	1 0k	100	75C	500m	500	2.5				10m$	125C	1 9 †			50	1.3kΔ*	125J	TO94
23▼#	FR500AW24	6	1 2k	0 0	400	71C							50m	125J	2 4	6 0u⊘	50u§	300	7 0kΔ	125J	M566
24▼#	FR500AX24	6	1.2k	0 0	400	71C							50m	125J	2 4	6 0u⊘	30u§	300	7 0kΔ	125J	M566
25▼#	BTX94-1200	6	1 2k	1 2k	25	85C		150m	3 0				7.0m	125J	2 3	1.5u		100	250 *	125J	TO48
26▼#	BCR70A24	6	1 2k	1 2k	70	78C		200m	4 0				15m	125J	2 1			100	800 Δ	125J	S332
27#	BCR150A24	6	1 2k	1.2k	150	81C		350m	3.5				15m	125J	2 3			20	2.0k	125J	S237e
28	2N5261	6	1 2k	1 2k	200	65C	850m§	800m	3.0				15m	125C	2 1				1 3k§	125C	TO93
29▼#	BCR300A24	6	1 2k	1 2k	300	72C		400m	4 0				30m	125J	2 0			100	3 0kΔ	125J	S351

SYMBOLS AND CODES EXPLAINED IN INTERPRETER

8. MICROWAVE MIXER DIODES

IN ORDER OF (1) TEST FREQ (OR MIN FREQ WHEN TEST FREQ NOT AVAILABLE) and (2) TYPE No.

LINE No	TYPE No. [2]	BAND	TEST FREQ. [1] (Hz)	FREQUENCY RANGE MIN - MAX (Hz)	NOISE MAX RATIO NR times	NOISE MAX REC. NF (dB)	TEST COND. FOR- Pin (W)	RL (Ω)	Zm (Ω)	MAX. CONV. LOSS (dB)	MAX. VSWR	IF IMPEDANCE RANGE MIN - MAX (Ω)	ABSOLUTE MAX RATING BURN-OUT (Erg)	MAX. TEMP (°C)	DESCRIPTION MAT.	DWG. No
1	1N832C			4 0G - 12G		6.5								150S	Si	DO7
2	1N5436			12G - 18G		7 5	1 0m	22	500		2 5	400 - 600		150S	Si♦	DO37
3	1N5437			12G - 18G		7.0	1.0m	22	500		2 5	400 - 600		150S	Si♦	DO37
4	1N5438			12G - 18G		6 5	1 0m	22	500		2 5	400 - 600		150S	Si♦	DO37
5	L8202	X	9 375M	1 0G - 12 4G	1 1	8.0	1 0m	10		6 2Ø		200Ø	3 0	150A	Si♦	F27ac
6	L8202A	X	9 375M	1 0G - 12.4G	1 1	7.5	1 0m	10		5 7Ø		200Ø	3 0	150A	Si♦	F27ac
7	L8202B	X	9 375M	1 0G - 12 4G	1 1	7.0	1 0m	10		4 7Ø		200Ø	3.0	150A	Si♦	F27ac
8	K3A		700M		13											A32c
9	K3F		700M		10											DO7
10	1N25	L	1 0G		2 5		1 2m	100	200	8 0		100-400	750 §	70A	Si	P3Ø
11	JAN1N25	L	1 0G		2 5		1 2m	100	200	8 0		100-400		70A	Si	P3
12	1N25A	L	1 0G		2 0		1 2m	100	200	6 5		100-300	750 §	70A	Si	P3Ø
13	1N25B	L	1000M		1 5	8 3	1 2	100	200	5 5		100- 300	750 §	70A	Si	P3Ø
14	1N25WA	L	1000M	1 00G - 2 00G		8 7		100	200		2 0	100- 300	6 5		Si§	P3a§
15	JAN1N25WA	L	1000M		1 5	8 7	1 0m	100	200	6 0	2.0	100-300		70A	Si	P3d
16	1N26B	L	1 0G		1 5	8.3	1 2m	100	200	5.5		100-300	750 §	70A	Si	P3Ø
17#	CS36A	L	1000M												Si	P3
18	D4084	L	1 0G		2 5		1 2m	100	200	8.0		100-400	750 §	70A	Si	P3Ø
19	D4084A	L	1 0G		2 0		1 2m	100	200	6.5		100-300	750 §	70A	Si	P3Ø
20	D4084B	L	1 0G		1 5	8.3	1 2m	100	200	5 5		100-300	750 §	70A	Si	P3a§Ø
21	HP5082-2817	L	1000M			6 0	1 0m	100			1.8	250-400	50	200J	Si#$	A1nØ
22	K25A	L	1 0G		2 0					6 5		100-400	6.5k§	125	Si	P3Ø
23	K25B	L	1 0G		1 5					5 5		100-400	6.5k§	150	Si	P3Ø
24	AEL-A51D	L-S	2 0G	1 0G-4 0G		5.0	500u	100	200		1.2	100-300		150S	Si	F27ad
25	HP5082-2350		2000M			7.0	1 0m				1 5	150- 250	5 0	125A	%♦	A1adØ
26	HP5082-2353		2000M			7.0	1 0m				1 5	150- 250	5.0	125A	%♦	F3jØ
27	HP5082-2365		2000M			6.5	1 0m				1.3	150- 250	5 0	125A	%♦	A1ad
28	HP5082-2366		2000M			6.5	1 0m				1 3	150- 250	5.0	125A	%♦	F3j
29	HP5082-2400	L	2000M			6.0	1 0m				1 3	150- 200	5 0	125A	%	A1ad
30	HP5082-2827	S	2000M			6.0	1 0m	100		4 6	1 8	250-400	50	200J	Si#$	A1nØ
31#	AAY56	S	3000M	2 000-4 000G		7.5					1 43		300m	100A	GeØ	P2cØ
32#	CS2A	S	3000M	- 6 00G	1 5					8 0					Si	P3b
33#	CS12B	S	3000M			7.0					1 5	350			Si	P2dØ
34#	CS33AØ	S	3000M	- 6 00G											Si	P3
35#	CS37A	S	3000M	- 6 00G											Si	P3b
36#	CV291	S	3000M	-6 0G		13 6						250-450			Si	P3
37#	CV364	S	3000M	-6 0G		12 2						250-450			Si	P3
38#	CV3923	S	3000M			13 7									Si	P3
39#	CV3984	S	3000M			12.2									Si	P3
40#	CV7771	S	3000M			7 5					1 43	350			Si	P2d
41#	CV7772	S	3000M			7.5					1 43	350			Si	P2d
42	HP5082-2520		3000M			7 0	1 0m				1 5	100- 250	15	125A	%♦	A1adØ
43	HP5082-2521		3000M			7 0	1.0m				1 5	100- 250	15	125A	%♦	A1adØ
44	HP5082-2523		3000M			7 0	1 0m				1 5	100- 250	15	125A	%♦	P3Ø
45	HP5082-2524		3000M			7 0	1 0m				1 5	100- 250	15	125A	%♦	P3Ø
46	HP5082-2550		3000M			6 5	1 0m				1 5	100- 250	15	125A	%♦	A1adØ
47	HP5082-2551		3000M			6 5	1 0m				1 5	100- 250	15	125A	%♦	A1adØ
48	HP5082-2553		3000M			6.5	1 0m				1 5	100- 250	15	125A	%♦	P3Ø
49	HP5082-2554		3000M			6.5	1 0m				1.5	100- 250	15	125A	%♦	P3Ø
50	HP5082-2563		3000M			6.0	1.0m				1 5	100- 250	15	125A	%♦	P3Ø
51	HP5082-2564		3000M			6.0	1 0m				1 5	100- 250	15	125A	%♦	P3Ø
52	HP5082-2565		3000M			6 0	1 0m				1 5	100- 250	15	125A	%♦	A1adØ
53	HP5082-2566		3000M			6 0	1 0m				1.5	100- 250	15	125A	%♦	A1adØ
54	MA40001	S	3 0G			6 5					1 8	200-400	10	150A	♦Ø	F34fØ
55	MA40002	S	3 0G			6 0					1 6	200-400	10	150A	♦Ø	F32fØ
56	MA40003	S	3 0G			5 5					1.6	200-400	10	150A	♦Ø	F32fØ
57	1N21B	S	3060M		2 0		.50m	100	400	6 5		300- 700	2 0	150A	Si	P3Ø
58	1N21C	S	3060M		1 5		50m	100	400	5 5		300- 700	2 0	150A	Si	P3Ø
59	1N21D	S	3060M		1 3		50m	100	400	5 0	1 5	325- 475	2 0	150A	Si	P3Ø
60	1N21E	S	3060M			7.0	50m	100	400		1 3	350- 450	5 0	150A	Si	P3Ø
61	1N21F	S	3060M			6 0	50m	100	400		1 3	350- 450	5 0	150A	Si	P3Ø
62	1N21G	S	3060M			5 5	50m	100	400		1 3	350- 450	5 0	150S	SiØ	DO22
63	1N21WD	S	3060M		1 5	7 3	50m	100	400	5 0	1 5	325- 475	2 0	150S	SiØ	P3a§
64	1N21WE	S	3060M		1 5	7 0	50m	100	400	5 5	1 3	350- 450	2 0	150A	Si	P3a§Ø
65	JAN1N21WE,WEM,WEMR	S	3060M		1 5	7 0	500u	100	400	5 5	1.3	350-450	2.0	150A	Si	P3d
66	1N21WF	S	3060M			6 0	50m	100	400		1 3	350- 450	5 0	150S	SiØ	P3a§
67	1N21WG	S	3060M			5 5	50m	100	400		1 3	350- 450	5 0	150S	SiØ	P3a§
68	JAN1N21WG,WGM,WGMR	S	3060M		1 5	5 5	500u	100	400	5.5	1 3	350-450	2 0	150A	Si	P3d
69	1N416B	S	3060M		2 0		50m	100	400	6 5		300- 700	2 0	150A	Si	P3Ø
70	1N416C	S	3060M		1 5		50m	100	400	5 5		300- 700	2 0	150A	Si	P3Ø
71	1N416D	S	3060M		1 3		50m	100	400	5 0	1.5	325- 475	2 0	150A	Si	P3Ø
72	1N416E	S	3060M			7 0	50m	100	400		1 3	350- 450	5 0	150A	Si	P3Ø
73	1N416F	S	3060M			6 0	.50m	100	400		1 3	350- 450	5.0	150S	SiØ	DO23
74	1N416G	S	3060M			5 5	50m	100	400		1.3	350- 450	5 0	150S	SiØ	DO23
75	1N831	S	3060M		1 5		5 0m	100	400	5.5				150A	Si	A196b
76	1N831A	S	3060M			7 0	5.0m	100	400					150A	Si	A196b
77	JAN1N831A	S	3060M	3.05G - 3 06G	1 5	7 0	5 0m	100	400	5 5	1 3	350- 450		100	Si	A1sk
78	1N831B	S	3060M	1 55G - 5 2G	1 5	6.5		100	400	5.5				150S	Si	DO7
79	1N831C	S	3.06G	1.55G-5 2G	1 5	6 0	500u	100	400	5.5				150S	Si	DO7
80	1N3655	S	3060M		1 5	8.3				5 5		200- 800			Si	P3Ø
81	1N3655A	S	3060M		1 5	7.0				5 5	1 3	350- 950			Si	P3Ø
82	JAN1N3655A,AM,AMR	S	3060M	3 05G - 3 06G	1 5	7.0	50m	100	400	5 5	1 3		10	150A	Si	P3Ø
83	1N3655B		3060M		1 5	6 0		100	400	5 5	1 5	350- 450	10	150S	Si	DO23
84	1N3733	S	3060M		1 5					5 5					Si	P3Ø
85	1N4294	S	3060M		1 5			100	400	5.5			10	150A	Si	P3
86▼#	1S1721	S	3060M	2 0G-4 0G		7 0	500u	100	400	5.5		400Ø	10	125	SiØ$	DO23
87#	8021B	S	3060M	2 00G - 4 00G	2 0		50m	100	400	6 5	2 0	200- 800	2.0		Si	P3c
88#	8021C	S	3060M	2 00G - 4.00G	1 5		.50m	100	400	5 5	2 0	200- 800	2 0		Si	P3c
89#	8021D	S	3060M	2 00G - 4 00G	1 3		50m	100	400	5 0	1 5	325- 475	2.0		Si	P3c
90#	8021E	S	3060M	2 00G - 4 00G		7 0	50m	100	400		1 3	350- 450	1 0		Si	P3c
91#	8021F	S	3060M	2 00G - 4 00G		6 0	50m	100	400		1 3	350- 450	1.0		Si	P3c
92#	8121B	S	3060M	2 00G - 4 00G	2 0		50m	100	400	6 5	2.0	200- 800	2 0		Si	P3c
93#	8121C	S	3060M	2.00G - 4 00G	1 5		.50m	100	400	5 5	2 0	200- 800	2 0		Si	P3c
94#	8121D	S	3060M	2 00G - 4 00G	1 3		.50m	100	400	5 0	1 5	325- 475	2 0		Si	P3c
95#	8121E	S	3060M	2 00G - 4 00G		7 0	50m	100	400		1 3	350- 450	1 0		Si	P3c
96#	8121F	S	3060M	2 00G - 4 00G		6 0	.50m	100	400		1 3	350- 450	1.0		Si	P3c
97#	BSM01	S	3060M	1 0M - 4 00G	1 5	8 3	50m	100	400	5 5		300- 500		150A	Si	P3a§
98#	BSM02	S	3060M	1 0M - 4 00G	1 2	6 0	50m	100	400	4 5	1 3	350- 450		150A	Si	P3a§
99	D4180	S	3060M		1 5		50m	100	400	5 5		300- 700	10	150A	Si	P3Ø
100	D4180C	S	3060M		1 5		.50m	100	400	5 5			10	150A	SiØ	P3Ø
101	D4180E	S	3060M			7 0	50m	100	400		1 3	350- 450	10	150A	SiØ	P3Ø
102	D4188B	S	3060M		2 0		.50m	100	400	6 5			2 0	150A	SiØ	P3a§
103	D4188C	S	3060M		1 5		50m	100	400	5 5			2 0	150A	SiØ	P3a§
104	D4188D	S	3060M		1 5		.50m	100	400	5 5			2 0	150A	SiØ	P3a§
105	D4188E	S	3060M		1 5	7 0	50m	100	400	5 5	1 3	350- 450	5 0	150A	SiØ	P3a§
106	D4188F	S	3060M			6 0	50m	100	400		1 3	350- 450	5 0	150A	SiØ	P3a§
107	D4940	S	3060M	2 00G - 4 00G		7 0	.50m	100	400			300- 700		150J	SiØ$	DO7Ø

SYMBOLS AND CODES EXPLAINED IN INTERPRETER

8. MICROWAVE MIXER DIODES

IN ORDER OF (1) TEST FREQ (OR MIN FREQ WHEN TEST FREQ NOT AVAILABLE) and (2) TYPE No.

LINE No.	2 TYPE No.	BAND	1 TEST FREQ. (Hz)	FREQUENCY RANGE MIN - MAX (Hz)	NOISE MAX RATIO NR times	NOISE MAX REC. NF (dB)	TEST COND. FOR- Pin (W)	RL (Ω)	Zm (Ω)	MAX. CONV. LOSS (dB)	MAX. VSWR	IF IMPEDANCE RANGE MIN - MAX (Ω)	ABSOLUTE MAX RATING BURN-OUT (Erg)	MAX. TEMP (°C)	DESCRIPTION MAT.	DWG. No.
1	D5091	S	3060M	2.00G - 4.00G		7.0		100	400			300- 700	2 0		Si§	A1amØ
2	D5091A	S	3060M	2.00G - 4.00G		6.5		100	400			300- 700	2.0		Si§	A1amØ
3	D5221C	S	3060M	2.00G-4.00G		8.3	500u	100			2.3	300-600	2 0	150S	Si☑	F85§☑
4	D5221E	S	3060M	2.00G-4.00G		7.0	500u	100			1.8	300-600	2.0	150S	Si☑	F85§☑
5	D5221F	S	3060M	2.00G-4.00G		6.0	500u	100			1.6	300-600	2.0	150S	Si☑	F85§☑
6	D5501	S	3060M	2.00G-4.00G		7 0	1.0m	10			2.3	250-450		150A	Si♦§	A1ak
7	D5501A	S	3060M	2.00G-4.00G		6.5	1.0m	10			2.0	250-450		150A	Si♦§	A1ak
8	D5501B	S	3060M	2.00G-4.00G		6.0	1.0m	10			1 8	250-450		150A	Si♦§	A1ak
9	D5501C	S	3060M	2.00G-4.00G		5.5	1.0m	10			1.7	250-450		150A	Si♦§	A1ak
10	D5503	S	3060M	2.00G-4.00G		7 0	1.0m	10			2 3	150-350		150A	Si♦§	F85
11	D5503A	S	3060M	2.00G-4.00G		6.5	1.0m	10			2.0	150-350		150A	Si♦§	F85
12	D5503B	S	3060M	2.00G-4.00G		6.0	1 0m	10			1.8	150-350		150A	Si♦§	F85
13	D5503C	S	3060M	2.00G-4.00G		5.5	1.0m	10			1.7	150-350		150A	Si♦§	F85
14▼	D5616H	S	3060M			5 0	500u				1 3	350-450	2.0	150A	☑	F63cØ
15▼	D5621H	S	3060M			5.0	500u				1 3	350-450	2.0	150A	☑	F63dØ
16	D5910	S	3060M	2.00G-4.00G		7.0	500u	100			1 3	350-450		150A	Si♦	F63b§
17	D5910A	S	3060M	2.00G-4.00G		6.5	500u	100			1 3	350-450		150A	Si♦	F63b§
18	D5910B	S	3060M	2.00G-4.00G		6.0	500u	100			1.3	350-450		150A	Si♦	F63b§
19	D5910C	S	3060M	2.00G-4 00G		5.5	500u	100			1 3	350-450		150A	Si♦	F63b§
20	L8200	S	3.06G	1.0G - 4.0G	1 1	7.0	1 0m	10		4 9Ø		230Ø	3 0	150A	Si♦	F27ac
21	L8200A	S	3.06G	1.0G - 4.0G	1.1	6.5	1.0m	10		4.4Ø		230Ø	3.0	150A	Si♦	F27ac
22	L8200B	S	3 06G	1.0G - 4 0G	1 1	6.0	1.0m	10		3.9Ø		230Ø	3 0	150A	Si♦	F27ac
23	L8200C	S	3.06G	1.0G - 4 0G	1 1	5.5	1.0m	10		3.7Ø		230Ø	3.0	150A	Si♦	F27ac
24	L8201	S	3.06G	1.0G - 4 0G	1 1	7 0	1 0m	10		4.9Ø		230Ø	3.0	150A	Si♦	A1ad
25	L8201A	S	3 06G	1.0G - 4 0G	1.1	6.5	1 0m	10		4 4Ø		230Ø	3.0	150A	Si♦	A1ad
26	L8201B	S	3 06G	1.0G - 4 0G	1.1	6 0	1.0m	10		3 9Ø		230Ø	3 0	150A	Si♦	A1ad
27	L8201C	S	3 06G	1.0G - 4.0G	1.1	5.5	1.0m	10		3 7Ø		230Ø	3.0	150A	Si♦	A1ad
28	L8203	S	3 06G	1.0G - 4 0G	1 1	7.0	1.0m	10		4.9Ø		230Ø	3.0	150A	Si♦	F10qØ
29	L8203A	S	3 06G	1.0G - 4.0G	1 1	6.5	1.0m	10		4.4Ø		230Ø	3 0	150A	Si♦	F10qØ
30	L8203B	S	3.06G	1.0G - 4.0G	1 1	6.0	1.0m	10		3.9Ø		230Ø	3.0	150A	Si♦	F10qØ
31	L8203C	S	3 06G	1.0G - 4 0G	1.1	5 5	1 0m	10		3 7Ø		230Ø	3 0	150A	Si♦	F10qØ
32	L8204	S	3 06G	1.0G - 4.0G	1 1	7.0	1.0m	10		4.9Ø		230Ø	3 0	150A	Si♦	M86aØ
33	L8204A	S	3.06G	1.0G - 4 0G	1 1	6.5	1 0m	10		4.4Ø		230Ø	3.0	150A	Si♦	M86aØ
34	L8204B	S	3 06G	1 0G - 4 0G	1 1	6.0	1 0m	10		3 9Ø		230Ø	3 0	150A	Si♦	M86aØ
35	L8204C	S	3.06G	1.0G - 4 0G	1 1	5.5	1.0m	10		3.7Ø		230Ø	3 0	150A	Si♦	M86aØ
36	L8212	S	3.06G	1.0G-4.0G		7.0	1.0	10		4.9Ø		230Ø	3.0	125A	Si♦	F51
37	L8212A	S	3.06G	1.0G-4 0G		6.5	1 0	10		4 4Ø		230Ø	3 0	125A	Si♦	F51
38	L8212AM	S	3.06G	1.0G-4 0G		6.5	1.0	10		4 4Ø		230Ø	3 0	125A	Si♦	F51
39	L8212B	S	3.06G	1.0G-4 0G		6.0	1 0	10		3 9Ø		230Ø	3 0	125A	Si♦	F51
40	L8212BM	S	3.06G	1 0G-4 0G		6.0	1 0	10		3 9Ø		230Ø	3 0	125A	Si♦	F51
41	L8212C	S	3.06G	1.0G-4.0G		5.5	1.0	10		3.7Ø		230Ø	3 0	125A	Si♦	F51
42	L8212CM	S	3.06G	1.0G-4 0G		5 5	1 0	10		3 7Ø		230Ø	3 0	125A	Si♦	F51
43	L8212M	S	3.06G	1 0G-4.0G		7 0	1 0	10		4 9Ø		230Ø	3 0	125A	Si♦	F51
44	MA421A	S	3060M	500M - 4 00G		6 5					1 3	350- 450			Si	P3Ø
45	MA421B	S	3060M	500M - 4 00G		6 0					1 3	350- 450			Si	P3Ø
46	MA449B	S	3060M		2 0					6 5					Si	P3Ø
47	MA449C	S	3060M		1.5					5.5					Si	P3Ø
48	MA449D	S	3060M		1.3					5.0	1.5	325- 475			Si	P3Ø
49	MA449E	S	3060M		1.5	7 0				5.5	1 3	350- 450			Si	P3Ø
50	MA449F	S	3060M			6 0					1.3	350- 450			Si	P3Ø
51	MA459B	S	3060M		2 0	10.3	.50m	100	400	6.5				150A	Si☑	P3a§
52	MA459C	S	3060M		1 5	8.3	50m	100	400	5 5				150A	Si☑	P3a§
53	MA459D	S	3060M		1 3	7.3	.50m	100	400	5 0	1 5	325- 475		150A	Si☑	P3a§
54	MA459F	S	3060M			6.0	50m	100	400		1.3	350- 450		150A	Si☑	P3a§
55	MA4126	S	3060M		20					5 5					Si	P3Ø
56	MA4126A	S	3060M		10					5 5		200- 800			Si	P3Ø
57	MA4127	S	3060M		1 5	8.3				5.5	1.6	300- 500	10		Si	P3
58	MA4127A	S	3060M	1 0M - 4.00G		7 0	50m	100	400		1.6	350- 500	10	150A	Si☑	P3Ø
59	MA4131	S	3060M	1.00G - 4 00G	20	18	50m	100	400	5.5				150A	Si☑	P3a§
60	MA4131A	S	3060M	1 00G - 4 00G	10	15	.50m	100	400	5 5		200- 800		150A	Si☑	P3a§
61	MA4136	S	3060M		20					5.5					Si	P3Ø
62	MA4136A	S	3060M	1 00G - 4 00G	10		50m	100	400	5.5				150A	Si☑	DO7
63	MA4137	S	3060M		1 5					5 5					Si	DO7
64	MA4171	S	3060M			7 0						350- 450			Si	DO7Ø
65	MA4172	S	3060M		1 5	7 0				5 5	1 3	350- 450			Si	P3a§Ø
66	MA40051D	S	3060M		1 5	7 3	500m	100	400	5 5	1 5	350-450	10	150A	♦☑	P3aØ
67	MA40051E	S	3060M		1 5	7 0	500m	100	400	5 5	1 5	350-450	10	150A	♦☑	P3aØ
68	MA40051F	S	3060M		1 5	6 0	500m	100	400	5 5	1 5	350-450	10	150A	♦☑	P3aØ
69	MA40051G	S	3060M		1 5	5 5	500m	100	400	5.5	1 5	350-450	10	150A	♦☑	P3aØ
70	MA41500	S	3060M			8 3		100				200- 500	2.0	150	Si	A1ad
71	MA41501	S	3060M			7 0		100				250- 450	2.0	150	Si	A1ad
72	MA41502	S	3060M			6.5		100				250- 450	2 0	150	Si	A1ad
73	MA41503	S	3060M			6 0		100				250- 450	2.0	150	Si	A1ad
74	MA41504	S	3060M			5.5		100				250- 450	2.0	150	Si	A1ad
75	PK0601	S	3060M	2.00G - 4 00G		8.3	.50m	100	400		1 5	400- 600	15	150A	Si♦	DO7Ø
76	PK0601L	S	3 060G	2.0G-4 0G		8.3	500u	100	400		1.5	400-600	15	150A	Si♦	M86cØ
77	PK0602	S	3060M	2 00G - 4 00G		7.0	.50m	100	400		1.5	400- 600	15	150A	Si♦	DO7Ø
78	PK0602L	S	3060M	2.00G - 4.00G		7.0	.50m	100	400		1 5	400- 600	15	150A	Si♦	M86cØ
79	PK0603	S	3060M	2.00G - 4.00G		6.5	.50m	100	400		1.5	400- 600	15	150A	Si♦	DO7Ø
80	PK0603L	S	3060M	2 00G - 4.00G		6 5	.50m	100	400		1 5	400- 600	15	150A	Si♦	M86cØ
81	PK0604	S	3060M	2.00G - 4 00G		6.0	.50m	100	400		1 5	400- 600	10	150A	Si♦	DO7Ø
82	PK0604L	S	3060M	2 00G - 4.00G		6 0	50m	100	400		1 5	400- 600	10	150A	Si♦	M86cØ
83	PK0605	S	3060M	2.00G - 4 00G		5 5	.50m	100	400		1 5	400- 600	10	150A	Si♦	DO7Ø
84	PK0605L	S	3060M	2.00G - 4.00G		5.5	50m	100	400		1 5	400- 600	10	150A	Si♦	M86cØ
85	PK0801	S	3060M	2 00G - 4 00G		8 3	50m	100	400		1 5	400- 600	15	150A	Si♦	A1adØ
86	PK0801L	S	3060M	2.00G - 4.00G		8 3	50m	100	400		1 5	400- 600	15	150A	Si♦	M86cØ
87	PK0802	S	3060M	2.00G - 4 00G		7.0	.50m	100	400		1 5	400- 600	15	150A	Si♦	A1adØ
88	PK0802L	S	3060M	2.00G - 4 00G		7.0	.50m	100	400		1.5	400- 600	15	150A	Si♦	M86cØ
89	PK0803	S	3060M	2.00G - 4 00G		6 5	50m	100	400		1 5	400- 600	15	150A	Si♦	A1adØ
90	PK0803L	S	3060M	2.00G - 4.00G		6.5	50m	100	400		1 5	400- 600	15	150A	Si♦	M86cØ
91	PK0804	S	3060M	2.00G - 4 00G		6 0	50m	100	400		1 5	400- 600	10	150A	Si♦	A1adØ
92	PK0804L	S	3060M	2 00G - 4 00G		6 0	50m	100	400		1 5	400- 600	10	150A	Si♦	M86cØ
93	PK0805	S	3060M	2.00G - 4 00G		5 5	50m	100	400		1 5	400- 600	10	150A	Si♦	A1adØ
94	PK0805L	S	3060M	2.00G - 4 00G		5.5	50m	100	400		1 5	400- 600	10	150A	Si♦	M86cØ
95	PK5101	S	3060M	2 00G - 4 00G		8.3	50m	100	400		1 5	400- 600	15	150A	Si♦	F54aØ
96	PK5102	S	3060M	2.00G - 4 00G		7 0	50m	100	400		1.5	400- 600	15	150A	Si♦	F54aØ
97	PK5103	S	3060M	2.00G - 4.00G		6 5	.50m	100	400		1 5	400- 600	15	150A	Si♦	F54aØ
98	PK5104	S	3060M	2.00G - 4.00G		6 0	50m	100	400		1 5	400- 600	15	150A	Si♦	F54aØ
99	PK5105	S	3060M	2.00G - 4.00G		5 5	.50m	100	400		1 5	400- 450	10	150A	Si♦	F54aØ
100	PM0801	S	3060M	2.00G - 4 00G		8.3	50m	100	400		1 5	350- 450	5 0	150A	Si☑	A1adØ
101	PM0801L	S	3060M	2.00G - 4 00G		8.3	50m	100	400		1 5	350- 450	5 0	150A	Si☑	M86cØ
102	PM0802	S	3060M	2.00G - 4.00G		7 0	50m	100	400		1 5	350- 450	5 0	150A	Si☑	A1adØ
103	PM0802L	S	3060M	2.00G - 4.00G		7 0	.50m	100	400		1 5	350- 450	5.0	150A	Si☑	M86cØ
104	PM0803	S	3060M	2 00G - 4 00G		6 5	.50m	100	400		1 5	350- 550	5 0	150A	Si☑	A1adØ
105	PM0803L	S	3060M	2.00G - 4.00G		6 5	.50m	100	400		1 5	350- 550	5.0	150A	Si☑	M86cØ
106	PM0804	S	3060M	2.00G - 4.00G		6 0	.50m	100	400		1 5	350- 550	5 0	150A	Si☑	A1adØ
107	PM0804L	S	3060M	2 00G - 4 00G		6 0	50m	100	400		1 5	350- 550	5 0	150A	Si☑	M86cØ
108	PM0805	S	3060M	2 00G - 4.00G		5.5	.50m	100	400		1.5	350- 550	5 0	150A	Si☑	A1adØ
109	PM0805L	S	3060M	2 00G - 4 00G		5 5	50m	100	400		1 5	350- 550	5 0	150A	Si☑	M86cØ
110#	X6P1	S	3060M			6 5	1.0m	10	400		2 0	300-400			Si♦	F27d

SYMBOLS AND CODES EXPLAINED IN INTERPRETER

8. MICROWAVE MIXER DIODES

IN ORDER OF (1) TEST FREQ (OR MIN FREQ WHEN TEST FREQ NOT AVAILABLE) and (2) TYPE No.

LINE No	2 TYPE No.	BAND	1 TEST FREQ (Hz)	FREQUENCY RANGE MIN - MAX (Hz)	NOISE MAX RATIO NR times	NOISE MAX REC. NF (dB)	TEST COND. FOR- Pin (W)	RL (Ω)	Zm (Ω)	MAX. CONV. LOSS (dB)	MAX. VSWR	IF IMPEDANCE RANGE MIN - MAX (Ω)	ABSOLUTE MAX RATING BURN-OUT (Erg)	MAX. TEMP (°C)	DESCRIPTION MAT.	DWG. No.
1#	X6P3	S	3060M			5 5	1.0m	10	400		2.0	300-400			Si♦	F27d
2#	X61P2	S	3060M			6.0	1 0m	10	400		2.0	300-400			Si♦	F27d
3#	XMP1	S	3060M			6.5	1.0m	10	400		2 0	300-400			Si♦	A1ac
4#	XMP2	S	3060M			6 0	1.0m	10	400		2.0	300-400			Si♦	A1ac
5#	XMP3	S	3060M			5 5	1.0m	10	400		2.0	300-400			Si♦	A1ac
6#	1N28J		4000M		2 7		1.0m			8.0				90S	Si	P3
7#	SH5A	S	4000M	3.00G - 6.00G						8.0					Si	P3
8	1N150	C	6750M	6 00G - 7.00G	2 0	9 8	1.0m	100	400	6.0	1.5	250- 500	1.0	150A	Si⊠	P3Ø
9	1N160	C	6750M	6.00G - 7.00G	2 7	11.4	1.0m	100	400	6.5		200- 500	1 0	150A	Si⊠	P3Ø
10	JAN1N1132,R	S-X	6 75G	2.0G-12.4G		9.5	1.0m	100	150		2.0	100-200		70A	Si	P1c⊠
11	D5632		6750M	3.00G - 12 4G		9 0	1.0m	100			2 0	100- 200	1 0	150A	Si⊠	P1b△
12	D5632A		6750M	3.00G - 12.4G		8.0	1.0m	100			2 0	100- 200	1.0	150A	Si⊠	P1b△
13	MA419	C	6750M	6.00G - 7.00G	2.7	11 4	1.0m	100	400	6 5		200- 500	1.0	150A	Si⊠	P3aš
14	MA419A	C	6750M	6.00G - 7 00G	2 0	9.8	1.0m	100	400	6.0	1.5	250- 500	1 0	150A	Si⊠	P3aš
15	1N1132	S-X	7.5G	3.0G-12.4G		9 5	1.0m	100	150		2 0	100-200		70A	Si	P1cØ
16	HP5082-2602	C	8000M			7 0	1.0m				1.5	125- 250	5.0	125	%	A1ad
17	L8205	X	8 0G	1.0G - 4.0G	1 1	7.5	1 0m	10		5.7Ø		200Ø	3 0	150A	Si♦	A1ad
18	L8205A	X	8 0G	1.0G - 4 0G	1 1	7 0	1.0m	10		5.2Ø		200Ø	3.0	150A	Si♦	A1ad
19	L8205B	X	8 0G	1.0G - 4 0G	1 1	6.5	1.0m	10		4 7Ø		200Ø	3.0	150A	Si♦	A1ad
20	MA4623	X	8800M			15					2 0	50- 150		150A	Si	P1b
21	MA4623A	X	8800M			12					2.0	50- 150		150A	Si	P1b
22	1N2509	C	9000M	4 00G - 10.0G		10	1.0m	10			1 5	200- 450		150S	Si⊠	F3bš
23	MA40006	X	9 3G			8 0					1.8	200-500	5.0	150A	♦⊠	F32fØ
24	MA40007	X	9 3G			7.0					1 6	200-500	5 0	150A	♦⊠	F32fØ
25	MA40008	X	9 3G			6.5					1.6	200-500	5.0	150A	♦⊠	F32fØ
26	MA40009	X	9 3G			6 0					1 6	200-500	5 0	150A	♦⊠	F32fØ
27	1N23B	X	9375M		2 7		1.0m	100	400	6.5		250- 550	1 0	150A	Si	P3Ø
28	1N23C	X	9 375G		2 0	9 5	1.0m	100	400	6 0	1 5	325-475		150A	Si⊠	P3Ø
29	1N23D	X	9375M		1 7	8.5	1.0m	100	400	5 0	1.3	350- 450	1 0	150A	Si	P3Ø
30	1N23E	X	9375M			7 5	1.0m	100	400	5.0	1 3	335- 465	1.0	150A	Si	P3Ø
31	1N23F	X	9375M			7.0	1.0m	100	400	5.0	1 3	335- 465	2.0	150A	Si	P3Ø
32	1N23G	X	9375M			6.5	1.0m	100	400		1 3	335- 465	2.0	150S	Si⊠	DO22
33	1N23WD	X	9375M		1 7	8 2	1.0m	100	400	5 0	1 3	350- 450	1.0	150S	Si⊠	P3aš
34	1N23WE	X	9375M		1.4	7 5	1.0m	100	400	5 0	1 3	335- 465	1.0	150A	Si	P3a
35	JAN1N23WE,WEM,WEMR	X	9375M		1 4	7.5	1 0m	100	400	6 0	1.3	335-465	2.0	150A	Si	P3d
36	1N23WF	X	9375M			7.0	1.0m	100	400		1.3	335- 465	2.0	150S	Si⊠	P3aš
37	1N23WG	X	9375M			6 5	1 0m	100	400		1.3	335- 465	2.0	150S	Si⊠	P3aš
38	JAN1N23WG,WGM,WGMR	X	9375M		1.4	6 5	1.0m	100	400	6 0	1.3	335-465	2.0	150A	Si	P3d
39	1N149	X	9375M		1 5		1 0m	100	400	5.5	1.5	325- 475	1.0	150A	Si	P3Ø
40	1N263	X	9.375G	8 6G-9 6G	1.4	7.5			190	6.0	1 3	140-210	1.3	90A	Ge	P3aØ
41	JAN1N263	X	9375M		1.4	7 5	1.0m	100	190	6 0	1.3	140- 210		100A	Ge	P3a
42	1N415B	X	9375M		2 7		1.0m	100	400	6.5		250- 550	1.0	150A	Si	P3aš
43	1N415C	X	9375M		2 0	10	1.0m	100	400	6 0	1 5	325- 475	1.0	150A	Si	P3aš
44	1N415D	X	9375M		1 7	8.5	1.0m	100	400	5.0	1 3	350- 450	1.0	150A	Si	P3aš
45	1N415E	X	9375M			7.5	1.0m	100	400		1 3	335- 465	1.0	150A	Si	P3aš
46	1N415F	X	9375M			7 0	1.0m	100	400		1.3	335- 465	2.0	150S	Si⊠	DO23
47	1N415G	X	9375M			6.5	1.0m	100	400		1 3	335- 465	2.0	150S	Si⊠	DO23
48	1N832	X	9375M		2 0	10	1.0m	100	400	6 0			1.0	150A	Si	A196b
49	1N832A	X	9375M		2.0	8.5				6.0		350- 450			Si	DO7Ø
50	1N832B		9375M	4 00G - 10 0G		7.0	1.0m	100	400					150S	Si	DO7
51	JAN1N832B	X	9375M	8 20G - 12 4G	1 4	7.5	5.0m	100	400	6 0	1 3	335- 465		100A	Si	A1dd
52▼	1N832D	X	9375M	4 00G-12.0G		6.0	1.0m	100	400					150S	Si	DO7
53	1N2802	X	9375M			7.5	1.0m	100	400		1.3			150A	Si	F3mØ
54	1N3745	X	9375M			9.5					1.5	325- 475			Si⊠	P3
55	1N3746	X	9375M			8.5					1.3	335- 465			Si⊠	P3
56	1N3747	X	9375M			7 5					1.3	335- 465			Si⊠	P3
57	JAN1N3747W,WM,WMR	X	9375M	8.20G - 12 4G	1 5	7.5	1.0m	100	400	6 0	1.3		5.0	150A	Si	DO22Ø
58#	1N4940		9 375G	1 0G-18G	1.25	6.5	500u	15	500	5.0	1.43	300-500		150S	Ge	F36bš
59#	8023B	X	9375M	8.20G - 12 4G	2 7		1.0m	100	400	6.5	2 0	200- 600	1.0		Si	P3c
60#	8023C	X	9375M	8.20G - 12.4G	2 0		1.0m	100	400	6.0	1.5	200- 500	1.0		Si	P3c
61#	8023D	X	9375M	8.20G - 12.4G	1 7		1.0m	100	400	5 0	1.3	350- 450	1.0		Si	P3c
62#	8023E	X	9375M	8.20G - 12.4G		7.5	1.0m	100	400		1.3	335- 465	1.0		Si	P3c
63#	8023F	X	9375M	8.20G - 12 4G		7.0	1.0m	100	400		1 3	335- 465	2.0		Si	P3c
64#	8049	X	9375M	8.20G - 12 4G	1 5		1.0m	100	400	5.5	1.5	325- 475	1.0		Si	P3c
65#	8123B	X	9375M	8.20G - 12 4G	2 7		1.0m	100	400	6.5	2.0	200- 600	1 0		Si	P3c
66#	8123C	X	9375M	8.20G - 12.4G	2 0		1.0m	100	400	6 0	1.5	200- 500	1.0		Si	P3c
67#	8123D	X	9375M	8 20G - 12.4G	1 7		1.0m	100	400	5.0	1 3	350- 450	1.0		Si	P3c
68#	8123E	X	9375M	8.20G - 12.4G		7 5	1.0m	100	400		1 3	335- 465	1.0		Si	P3c
69#	8123F	X	9375M	8.20G - 12 4G		7.0	1.0m	100	400		1 3	335- 465	2.0		Si	P3c
70#	8149	X	9375M	8.20G - 12.4G	1 5		1.0m	100	400	5.5	1.5	325- 475	1.0		Si	P3c
71#	8249	X	9375M	8.20G - 12.4G	1.5		1.0m	100	400	5.5		325- 475	1.0		Si	P3aØ
72▼	A2G172	X	9.375G	5.20G-10.9G		5.5	2.0m	10			2.0	500Ø		150A	GA#♦	M549
73▼	A2G173	X	9.375G	5.20G-10.9G		6.0	2.0m	10			2.0	500Ø		150A	GA#♦	M549
74♦	A2S101	X	9.375G	5.20G-10 9G		6.0	1.0m	10			1.5	200-400		150A	Si♦	M549
75♦	A2S102	X	9.375G	5 20G-10.9G		6.5	1.0m	10			1.5	200-400		150A	Si♦	M549
76♦	A2S103	X	9.375G	5.20G-10.9G		7.0	1.0m	10			1.5	200-400		150A	Si♦	M549
77▼	A2S106	X	9 375G	5.20G-10.9G		6.0	1.0m	10			1 5	200-400		150A	Si♦	F83
78▼	A2S107	X	9 375G	5.20G-10 9G		6 5	1.0m	10			1.5	200-400		150A	Si♦	F83
79▼	A2S108	X	9.375G	5.20G-10 9G		7.0	1.0m	10			1.5	200-400		150A	Si♦	F83
80#	AAY39	X	9.375G	1 0G-18G	1.1	6 5		15		4 2	1.43	250-450	1.0	150A	Ge⊠	F36b
81#	AAY39A	X	9 375G	1 0G-18G	1 2	7 5		15		5 0	1.43	250-450	1.0	150A	Ge⊠	F36b
82#	AAY40	X	9 375G	12G		8 5					1.43	200-500	.30	100A	Ge⊠	P3a
83#	AAY50	X	9375M	12G	1 1	6.8				4 4Ø	1.43	300-500	200m	100A	Ge⊠	P2c⊠
84#	BAW95D	X	9 375G			7.8					1.3	250-400		150J	Si	P12
85#	BAW95E	X	9.375G			7 2					1.3	250-400		150J	Si	P12
86#	BAW95F	X	9 375G			6.8					1 3	250-400		150J	Si	P12
87#	BSM11	C-X	9.375G	4.0G-12 5G	2 0	10 3	1.0m	100	400	6.5	1.5	325-475		150A	Si	P3aš
88#	BSM12	C-X	9.375G	4.0G-12 5G	1 4	7 5	1.0m	100	400	6.0	1.3	335-465		150A	Si	P3aš
89#	BSM13	C-X	9.375G	4 0G-12.5G	1.3	7 0				5 5	1 3	335-465			Si	P3aš
90#	BSM51	X	9375M	- 12 5G	2.0	10 2	1.0m	100	400	6 5		325- 475		150A	Si	A1
91#	BSM61	X	9375M	- 12.5G	20		1.0m	100	400	6.0	1.5	325- 475		85A	Si	P3aš
92#	CAY13	X	9.375G	12G	1.1	7.0		15		4.5	2 0	350	300m	150J		M520
93#	CAY14	X	9.375G	12G	1 1	7.0		15		4.5	1.6	350	300m	150J		P12
94#	CAY15	X	9.375G	12G	1.1	7.0		15		4.5	1 4	350	300m	150J		F79
95#	CS3A	X	9375M	- 10.0G	2 0					9.5	2 0	275- 500			Si	P3b
96#	CS3B	X	9375M	- 12 0G		12					67	500 Typ			Si	P2a⊠
97#	CS9B	X	9375M	-12.0G		10					1.5	280-420			Si	P2d⊠Ø
98#	CS10B	X	9375M	-12.0G		8 5					1 5	280-420			Si⊠	P2d⊠Ø
99#	CS34A	X	9375M	6.0G-12G		13.6						250-450			Si	P3
100#	CV253	X	9375M	6 0G-12G		13 6					2.0	275-550			Si	P3
101#	CV1844	X	9375M			13.6					2.0	400			Si	P2a
102#	CV2154	S-X	9375M			10					1.5	350			Si	P2d
103#	CV2155	S-X	9375M			10					1.5	350			Si	P2d
104#	CV5002	X	9375M			13 6									Si	P3
105#	CV7108	S-X	9375M			8.5					1 5				Si	P2d
106#	CV7109	S-X	9375M			8.5					1.5				Si	P2d
107#	CV7377	X	9375M			8.5	500u				1 5	350			Si	P2d

SYMBOLS AND CODES EXPLAINED IN INTERPRETER

8. MICROWAVE MIXER DIODES

IN ORDER OF (1) TEST FREQ (OR MIN FREQ WHEN TEST FREQ NOT AVAILABLE) and (2) TYPE No.

LINE No	2 TYPE No.	BAND	1 TEST FREQ. (Hz)	FREQUENCY RANGE MIN - MAX (Hz)	NOISE MAX RATIO NR times	NOISE MAX REC. NF (dB)	TEST COND. FOR- Pin (W)	RL (Ω)	Zm (Ω)	MAX CONV. LOSS (dB)	MAX. VSWR	IF IMPEDANCE RANGE MIN - MAX (Ω)	ABSOLUTE MAX RATING BURN-OUT (Erg)	MAX. TEMP (°C)	DESCRIPTION MAT.	DWG. No.
1#	CV7378	X	9375M			8 5	500u				1 5	350			Si	P2d
2#	CV8163	X	9375M			8 5					1 5	350			Si	P2d
3#	CV8164	X	9375M			8 5					1 5	350			Si	P2d
4	D4155	X	9375M		2 0	10	1 0m	100	400	6 0		325- 475	1 0	70A	Si☑	P3
5	D4160	X	9375M	8 20G - 12 4G		7 5	1 0m	100	400		1.3	335- 465	2 0	150	Si$	F3hØ
6	D4181C	X	9375M			9.5	1 0m	100	400		1 5	325- 475	5.0	150A	Si☑	P3Ø
7	D4181D	X	9375M			8.5	1 0m	100	400		1 3	335- 465	5.0	150A	Si☑	P3Ø
8	D4181E	X	9375M			7 5	1.0m	100	400		1 3	335- 465	5 0	150A	Si☑	P3Ø
9	D4189B	X	9375M		2 7		1 0m	100	400	6.5			2.0	150A	Si☑	P3a§
10	D4189C	X	9375M		2 0	10	1 0m	100	400	6 0	1 6	325- 475	2.0	150A	Si☑	P3a§
11	D4189D	X	9375M		1 7	8 5	1 0m	100	400	5.0	1 3	350- 450	2.0	150A	Si☑	P3a§
12	D4189E	X	9375M			7.5	1 0m	100	400		1.3	335- 465	2 0	150A	Si☑	P3a§
13	D4189F	X	9375M			7 0	1 0m	100	400		1 3	335- 465	2 0	150A	Si☑	P3a§
14	D4941	X	9375M	8 20G - 12 4G		9 0	1 0m	100	400			250- 550	2 0	150J	Si☑	DO7Ø
15	D5092	X	9375M	8 20G - 12 4G		9.5		100	400			250- 550	2 0		Si$	A1amØ
16	D5092A	X	9375M	8 20G - 12.4G		7 5		100	400			250- 550	2 0		Si$	A1amØ
17	D5223C	X	9375M	8 00G-12 0G		9 5	1 0m	100			2 3	250-500	1 0	150S	Si☑	F85§☑
18	D5223E	X	9375M	8.00G-12 0G		7 5	1.0m	100			1 8	250-500	1 0	150S	Si☑	F85§☑
19	D5223F	X	9375M	8 00G-12 0G		7 0	1 0m	100			1 6	250-500	1 0	150S	Si☑	F85§☑
20	D5392	X	9375M	8.20G - 12 4G		8 5	1.0m	100			2 5	200- 350	1 0	150A	Si☑	P1b
21	D5392A	X	9375M	8 20G - 12 4G		7.5	1.0m	100			2.5	200- 350	1 0	150A	Si☑	P1b
22	D5392B	X	9375M	8.20G - 12.4G		7 0	1 0m	100			2 5	200- 350	1 0	150A	Si☑	P1b
23	D5504A	X	9375M	8 00G-12 0G		8 0	1 0m	10			2 0	300-600		150A	Si♦$	A1ak
24	D5504B	X	9375M	8.00G-12 0G		7 0	1.0m	10			1 6	300-600		150A	Si♦$	A1ak
25	D5506C	X	9375M	8 00G-12 0G		6 5	1 0m	10			1 6	300-600		150A	Si♦$	A1ak
26	D5506A	X	9375M	8.00G-12 0G		8 0	1.0m	100			2 0	300-600		150A	Si♦$	F85
27	D5506B	X	9375M	8 00G-12 0G		7.0	1.0m	100			1 6	300-600		150A	Si♦$	F85
28	D5506C	X	9375M	8 00G-12 0G		6 5	1 0m	100			1 6	300-600		150A	Si♦$	F85
29▼	D5615H	X	9375M			6 0	1.0m				1 3	335-465	2 0	150A	☑	F63cØ
30▼	D5623H	X	9375M			6.0	1 0m				1 3	335-465	2 0	150A	☑	F63dØ
31	D5880	X	9375M	8 00-12 0G		7.5	1 0m	100			1 3	335-465		150A	Si♦§	F63b
32	D5880A	X	9375M	8 00-12 0G		7 0	1.0m	100			1.3	335-465		150A	Si♦§	F63b
33	D5880B	X	9375M	8 00-12 0G		6 5	1 0m	100			1 3	335-465		150A	Si♦§	F63b
34	D5880C	X	9375M	8.00-12 0G		6.0	1 0m	100			1 3	335-465		150A	Si♦$	F63b
35#	DC1301	X	9375M	-12G		6 0					1.6	500	200m		GA	M520
36#	DC1302	X	9375M	-12G		6 5					1 6	500	200m		GA	P3a
37#	DC1304	X	9375M	-12G		6 0					2 5	500	200m		GA	F51
38#	DC1501	X	9375M	-12G		6.5					1 5	400	300m		Si	F51
39#	DC1502	X	9375M	-12G		6 5					1 5	400	300m		Si	P2d
40#	DC1504	X	9375M	-12G		7 0					1 5	400	300m		Si	P3a
41	DMF6034	X	9375M	8 00G-12 0G		7 0	1.0m				1 6	200-500		150A	Si$♦	F54c☑
42	DMF6034A	X	9375M	8 00G-12.0G		6 5	1.0m				1 6	200-500		150A	Si$♦	F54c☑
43	DMF6034B	X	9375M	8.00G-12.0G		6.0	1 0m				1.6	200-500		150A	Si$♦	F54c☑
44	DMF6035	X	9375M	8.00G-12 0G		7 0	1 0m				1 6	200-500		150A	Si$♦	F10ac☑
45	DMF6035A	X	9375M	8 00G-12.0G		6.5	1.0m				1 6	200-500		150A	Si$♦	F10ac☑
46	DMF6035B	X	9375M	8 00G-12 0G		6.0	1 0m				1 6	200-500		150A	Si$♦	F10ac☑
47	DMF6037	X	9375M	8 00G-12.0G		7 0	1 0m				1 6	200-500		150A	Si$♦	F27g☑
48	DMF6037A	X	9375M	8.00G-12.0G		6.5	1 0m				1.6	200-500		150A	Si$♦	F27g☑
49	DMF6037B	X	9375M	8.00G-12 0G		6.0	1 0m				1 6	200-500		150A	Si$♦	F27g☑
50	DMF6106	X	9375M	8 00G-12 0G		7 0	1 0m				1 6	200-500		150A	Si$♦	F83☑
51	DMF6106A	X	9375M	8 00G-12.0G		6 5	1.0m				1 6	200-500		150A	Si$♦	F83☑
52	DMF6106B	X	9375M	8 00G-12.0G		6 0	1 0m				1 6	200-500		150A	Si$♦	F83☑
53	DMF6130	X	9375M	8.00G-12 0G		7 0	1.0m				1 6	200-500		150A	Si$♦	A1ak☑
54	DMF6130A	X	9375M	8.00G-12 0G		6 5	1.0m				1 6	200-500		150A	Si$♦	A1ak☑
55	DMF6130B	X	9375M	8.00G-12 0G		6 0	1 0m				1 6	200-500		150A	Si$♦	A1ak☑
56	DMF6131	X	9375M	8 00G-12 0G		7 0	1 0m				1.6	200-500		150A	Si$♦	F85☑
57	DMF6131A	X	9375M	8 00G-12.0G		6 5	1 0m				1 6	200-500		150A	Si$♦	F85☑
58	DMF6131B	X	9375M	8 00G-12.0G		6 0	1 0m				1 6	200-500		150A	Si$♦	F85☑
59	HP5082-2701	X	9 375G	5 00G-40 0G		6 0	1 0m				1 5	250-400		150A	%♦	M277bØ
60	HP5082-2702	X	9.375G			6 5	1 0m				1 5	250-400	2 0	150A	%♦	M277bØ
61	HP5082-2703	X	9 375G			7.0					1 5	250-400		150A	%♦	M277bØ
62	HP5082-2711	X	9 375G			6.5	1 0m	10			2 0		10	150A	Si#♦	F83Ø
63	HP5082-2713	X	9.375G			6.0	1.0m	10			2 0		10	150A	Si#♦	F83Ø
64	L4155	X-KU	9.375G	-14G		10					2 0	50-250	3 0	100	Ge*	F27abØ
65	L4156	X-KU	9 375G	-14G		10					2 0	50-250	3 0	100	Ge*	F10qØ
66	L4157	X-KU	9 375G	-14G		12					2 0	50-250	3 0	100	Ge*	M86aØ
67	L4164	X-KU	9 375G	-14G		12					2 0	50-250	3.0	150	Ge*	F49Ø
68	L4164A	X-Ku	9 375G	-14G		12 5	500m	10		8.0Ø	2.0	50-250	3.0	150A	Ge*	F49Ø
69	L4164AM	X-Ku	9.375G	-14G		12.5	500m	10		8 0Ø	2 0	50-250	3 0	150A	Ge*	F49Ø
70	L4164B	X-Ku	9 375G	-14G		11.5	500m	10		8 0Ø	2.0	50-250	3 0	150A	Ge*	F49Ø
71	L4164BM	X-Ku	9 375G	-14G		11.5	500m	10		8.0Ø	2.0	50-250	3 0	150A	Ge*	F49Ø
72	L4165	X-KU	9 375G	-14G		12					2 0	50-250	3 0	150	Ge*	F27abØ
73	L4166	X-KU	9 375G	-14G		12					2 0	50-250	3.0	150	Ge*	F10qØ
74	L4167	X-KU	9 375G	-14G		12					2 0	50-250	3.0	150	Ge*	M86aØ
75	L8202C	X	9 375G	1 0G - 12.4G	1 1	6.5	1 0m	10		4 7Ø		200Ø	3 0	150A	Si♦	F27ac
76	L8202D	X	9 375G	1.0G - 12.4G	1.1	6 0	1 0m	10		4 2Ø		200Ø	3 0	150A	Si♦	F27ac
77	L8202E	X	9 375G	1 0G - 12.4G	1 1	5.5	1 0m	10		3.7Ø		200Ø	3 0	150A	Si♦	F27ac
78	L8206	X	9.375G	1.0G - 12.4G	1 1	8.0	1 0m	10		6.2Ø		200Ø	3.0	150A	Si♦	F10qØ
79	L8206A	X	9 375G	1 0G - 12.4G	1 1	7 5	1.0m	10		5 7Ø		200Ø	3 0	150A	Si♦	F10qØ
80	L8206B	X	9 375G	1.0G - 12.4G	1 1	7.0	1 0m	10		5 2Ø		200Ø	3.0	150A	Si♦	F10qØ
81	L8206C	X	9 375G	1.0G - 12.4G	1 1	6 5	1 0m	10		4.7Ø		200Ø	3.0	150A	Si♦	F10qØ
82	L8206D	X	9 375G	1 0G - 12.4G	1.1	6 0	1.0m	10		4.2Ø		200Ø	3.0	150A	Si♦	F10qØ
83	L8206E	X	9 375G	1 0G - 12.4G	1 1	5 5	1.0m	10		3 7Ø		200Ø	3 0	150A	Si♦	F10qØ
84	L8207	X	9 375G	1 0G - 12.4G	1.1	8.0	1 0m	10		6.2Ø		200Ø	3.0	150A	Si♦	M86aØ
85	L8207A	X	9 375G	1.0G - 12.4G	1 1	7.5	1 0m	10		5 7Ø		200Ø	3.0	150A	Si♦	M86aØ
86	L8207B	X	9 375G	1.0G - 12.4G	1 1	7 0	1 0m	10		5 2Ø		200Ø	3 0	150A	Si♦	M86aØ
87	L8207C	X	9.375G	1.0G - 12.4G	1 1	6.5	1.0m	10		4.7Ø		200Ø	3.0	150A	Si♦	M86aØ
88	L8207D	X	9 375G	1.0G - 12.4G	1 1	6.0	1.0m	10		4 2Ø		200Ø	3.0	150A	Si♦	M86aØ
89	L8207E	X	9 375G	1 0G - 12.4G	1.1	5.5	1 0m	10		3.7Ø		200Ø	3.0	150A	Si♦	M86aØ
90	L8208	Ku	9 375G	12.4G - 18G	1 1	9.0	1 0m	10		7 2Ø		300Ø		150A	Si♦	F27ac
91	L8208A	Ku	9 375G	12 4G - 18G	1 1	8 0	1 0m	10		6.2Ø		300Ø		150A	Si♦	F27ac
92	L8208B	Ku	9.375G	12 4G - 18G	1 1	7.5	1 0m	10		5.7Ø		300Ø		150A	Si♦	F27ac
93	L8208C	Ku	9.375G	12 4G - 18G	1.1	7 0	1.0m	10		5.2Ø		300Ø		150A	Si♦	F27ac
94	L8211	X	9 375G	1 0G-12.4G		8 0	1.0	10		6 2Ø		200Ø	3 0	125A	Si♦	F51
95	L8211A	X	9 375G	1.0G-12.4G		7.5	1 0	10		5.7Ø		200Ø	3 0	125A	Si♦	F51
96	L8211AM	X	9.375G	1.0G-12 4G		7 5	1.0	10		5.7Ø		200Ø	3 0	125A	Si♦	F51
97	L8211B	X	9.375G	1 0G-12.4G		7 0	1 0	10		5.2Ø		200Ø	3.0	125A	Si♦	F51
98	L8211BM	X	9 375G	1.0G-12.4G		7.0	1 0	10		5.2Ø		200Ø	3 0	125A	Si♦	F51
99	L8211C	X	9.375G	1.0G-12 4G		6 5	1.0	10		4.7Ø		200Ø	3.0	125A	Si♦	F51
100	L8211CM	X	9.375G	1.0G-12.4G		6.5	1.0	10		4 7Ø		200Ø	3 0	125A	Si♦	F51
101	L8211D	X	9.375G	1.0G-12.4G		6 0	1.0	10		4.2Ø		200Ø	3.0	125A	Si♦	F51
102	L8211DM	X	9.375G	1.0G-12.4G		6.0	1.0	10		4.2Ø		200Ø	3.0	125A	Si♦	F51
103	L8211E	X	9 375G	1.0G-12.4G		5.5	1.0	10		3.7Ø		200Ø	3 0	125A	Si♦	F51
104	L8211EM	X	9.375G	1 0G-12 4G		5 5	1.0	10		3.7Ø		200Ø	3.0	125A	Si♦	F51
105	L8211M	X	9 375G	1.0G-12 4G		8.0	1 0	10		6.2Ø		200Ø	3.0	125A	Si♦	F51
106	MA414	X	9375M		1.5		1.0m	100	400	5.5	1 5	325- 475		150A	Si☑	P3Ø
107	MA423A	X	9375M	4 00G - 10.0G		7 0	1.0m	100	400		1 3	335- 465		150A	Si	P3Ø
108	MA451A	X	9375M		2.7					8.0					Si	Ø
109	MA451B	X	9375M		2 7					6.5					Si	P3Ø
110	MA451C	X	9375M		2.0	10				6.0	1.5	325- 475			Si	P3Ø

SYMBOLS AND CODES EXPLAINED IN INTERPRETER

8. MICROWAVE MIXER DIODES

IN ORDER OF (1) TEST FREQ (OR MIN FREQ WHEN TEST FREQ NOT AVAILABLE) and (2) TYPE No.

LINE No	2 TYPE No.	BAND	1 TEST FREQ. (Hz)	FREQUENCY RANGE MIN - MAX (Hz)	NOISE MAX RATIO NR times	NOISE MAX REC. NF (dB)	TEST COND. FOR- Pin (W)	RL (Ω)	Zm (Ω)	MAX. CONV. LOSS (dB)	MAX. VSWR	IF IMPEDANCE RANGE MIN - MAX (Ω)	ABSOLUTE MAX RATING BURN-OUT (Erg)	MAX. TEMP (°C)	DESCRIPTION MAT.	DWG No.
1	MA451D	X	9375M		17	8.5				50	1.3	350- 450			Si	P3Ø
2	MA451E	X	9375M			7.5					1.3	335- 465			Si	P3Ø
3	MA451F	X	9375M			7.0					1.3	335- 465			Si	P3Ø
4	MA458B	X	9375M		27		1.0m	100	400	65				150A	SiØ	P3a§
5	MA458C	X	9375M		2.0	10	1.0m	100	400	6.0	15	325- 475		150A	SiØ	P3a§
6	MA458D	X	9375M		17	85	1.0m	100	400	50	13	350- 450		150A	SiØ	P3a§
7	MA458E	X	9375M		14	7.5				6.0	13	335- 465	20		Si	P3a
8	MA458F	X	9375M			7.0	1.0m	100	400		13	335- 465		150A	SiØ	P3a§
9	MA492C	X	9375M			9.5					17	200- 300	10		Si	P1b
10	MA492D	X	9375M			8.5					1.7	200- 300	10		Si	P1b
11	MA492E	X	9375M			7.5					1.7	200- 300	1.0		Si	P1b
12	MA4101	S-X	9 375G	3.0G-12 4G		85	1.0m	100	150		20	100-200		70	Si	P1c
13	MA4125	X	9375M	8.00G - 12 0G	20	23	1.0m	100	400	6.0	15	300- 600		150A	SiØ	P3Ø
14	MA4125A	X	9375M	8 00G - 12.0G	10	20	1.0m	100	400	6.0	15	300- 600		150A	SiØ	P3Ø
15	MA4130	X	9375M	8 00G - 12 0G	20	23	1.0m	100	400	6 0	15	300- 600		150A	SiØ	P3a§
16	MA4130A	X	9375M	8 00G - 12 0G	10	20	1.0m	100	400	6.0	1.5	300- 600		150A	SiØ	P3a§
17	MA4133	X	9375M		20	10	1.0m	100	400	6 0		325- 475	5.0	150A	Si	P3
18	MA4173	X	9375M			7.5					15	335- 465			Si	DO7Ø
19	MA4174	X	9375M		14	75				60	13	335- 465			Si	P3a
20	MA4400	S-X	9 375G	3 0G-12 4G		95	10m	100	150		20	100-200		100	Si	P1c
21	MA4400A	S-X	9 375G	3 0G-12 4G		85	10m	100	150		20	100-200		100	Si	P1c
22	MA40071D	X	9375M		15	80	1.0	100	400	65	15	335-465	10	150A	♦Ø	P3aØ
23	MA40071E	X	9375M		14	7.5	10	100	400	6.0	15	335-465	10	150A	♦Ø	P3aØ
24	MA40071F	X	9375M		14	7.0	1.0	100	400	6.0	15	335-465	10	150A	♦Ø	P3aØ
25	MA40071G	X	9375M		14	6.5	1.0	100	400	60	15	335-465	10	150A	♦Ø	P3aØ
26	MA40071H	X	9375M		14	6.0	1.0	100	400	6.0	15	335-465	10	150A	♦Ø	P3aØ
27	MA41505	X	9375M			9.5		100				100- 300	2.0	150	Si	A1ad
28	MA41506	X	9 375G			75		100				125-250	2.0	150	Si	A1ad
29	MA41507	X	9375M			7.0		100				125- 250	2.0	150	Si	A1ad
30	MA41508	X	9375M			65		100				125- 250	20	150	Si	A1ad
31	MA41509	X	9375M			6.0		100				125- 250	20	150	Si	A1ad
32#	MD0189	X	9.375G			60	7.0m				15	130-230	10	150	Si	F27ab
33#	MD0190	X	9 375G			6.5	7 0m				15	130-230	10	150	Si	F27ab
34#	MD0191	X	9 375G			7.0	7 0m				15	130-230	10	150	Si	F27ab
35	MS1650X	X	9375M	8 20G - 12 4G		70	1.0m			50			10	100A	GA♦$	F10k
36	MS1651X	X	9375M	8 20G - 12 4G		65	10m			45			10	100A	GA♦$	F10k
37	PK0606	X	9375M	8 20G - 12 4G		10	1.0m	100	400		15	150- 450	10	150A	Si♦	DO7Ø
38	PK0606L	X	9375M	8 20G - 12 4G		10	10m	100	400		15	150- 450	10	150A	Si♦	M86cØ
39	PK0607	X	9375M	8.20G - 12 4G		75	1.0m	100	400		15	150- 450	10	150A	Si♦	DO7Ø
40	PK0607L	X	9375M	8 20G - 12 4G		75	1.0m	100	400		15	150- 450	10	150A	Si♦	M86cØ
41	PK0608	X	9375M	8 20G - 12 4G		7.0	10m	100	400		1.5	150- 450	10	150A	Si♦	DO7Ø
42	PK0608L	X	9375M	8 20G - 12 4G		70	10m	100	400		15	150- 450	10	150A	Si♦	M86cØ
43	PK0609	X	9375M	8 20G - 12 4G		65	1.0m	100	400		15	150- 450	10	150A	Si♦	DO7Ø
44	PK0609L	X	9375M	8 20G - 12 4G		65	10m	100	400		15	150- 450	10	150A	Si♦	M86cØ
45	PK0610	X	9375M	8 20G - 12 4G		6.0	1.0m	100	400		15	150- 450	10	150A	Si♦	DO7Ø
46	PK0610L	X	9375M	8.20G - 12 4G		6.0	1.0m	100	400		15	150- 450	10	150A	Si♦	M86cØ
47	PK0806	X	9375M	8.20G - 12.4G		10	10m	100	400		15	150- 450	10	150A	Si♦	A1adØ
48	PK0806L	X	9375M	8 20G - 12.4G		10	1.0m	100	400		15	150- 450	10	150A	Si♦	M86cØ
49	PK0807	X	9375M	8 20G - 12.4G		7.5	10m	100	400		15	150- 450	10	150A	Si♦	A1adØ
50	PK0807L	X	9375M	8 20G - 12 4G		75	1.0m	100	400		1.5	150- 450	10	150A	Si♦	M86cØ
51	PK0808	X	9375M	8.20G - 12 4G		7.0	10m	100	400		15	150- 450	10	150A	Si♦	A1adØ
52	PK0808L	X	9375M	8.20G - 12 4G		7.0	10m	100	400		15	150- 450	10	150A	Si♦	M86cØ
53	PK0809	X	9375M	8 20G - 12 4G		65	10m	100	400		15	150- 450	10	150A	Si♦	A1adØ
54	PK0809L	X	9375M	8 20G - 12 4G		6.5	10m	100	400		15	150- 450	10	150A	Si♦	M86cØ
55	PK0810	X	9375M	8.20G - 12 4G		60	10m	100	400		1.5	150- 450	10	150A	Si♦	A1adØ
56	PK0810L	X	9375M	8 20G - 12 4G		6.0	1.0m	100	400		15	150- 450	10	150A	Si♦	M86cØ
57	PK5106	X	9375M	8.20G - 12.4G		10	1.0m	100	400		1.5	150- 450	10	150A	Si♦	F54aØ
58	PK5107	X	9375M	8 20G - 12.4G		75	10m	100	400		1.5	150- 450	10	150A	Si♦	F54aØ
59	PK5108	X	9375M	8 20G - 12.4G		7.0	10m	100	400		15	150- 450	10	150A	Si♦	F54aØ
60	PK5109	X	9375M	8 20G - 12 4G		6.5	1.0m	100	400		1.5	150- 450	10	150A	Si♦	F54aØ
61	PK5110	X	9375M	8 20G - 12 4G		6.0	10m	100	400		1.5	150- 450	10	150A	Si♦	F54aØ
62	PM0806	X	9375M	8 20G - 12 4G		10	1.0m	100	400		15	325- 475	50	150A	SiØ	A1adØ
63	PM0806L	X	9375M	8.20G - 12.4G		10	1.0m	100	400		1.5	325- 475	50	150A	SiØ	M86cØ
64	PM0807	X	9375M	8 20G - 12.4G		75	10m	100	400		15	335- 465	50	150A	SiØ	A1adØ
65	PM0807L	X	9375M	8 20G - 12 4G		75	1.0m	100	400		15	335- 465	50	150A	SiØ	M86cØ
66	PM0808	X	9375M	8.20G - 12 4G		70	10m	100	400		15	335- 465	50	150A	SiØ	A1adØ
67	PM0808L	X	9375M	8.20G - 12 4G		70	10m	100	400		15	335- 465	5.0	150A	SiØ	M86cØ
68	PM0809	X	9375M	8.20G - 12 4G		6.5	1.0m	100	400		15	350- 550	50	150A	SiØ	A1adØ
69	PM0809L	X	9375M	8.20G - 12 4G		65	10m	100	400		15	350- 550	5.0	150A	SiØ	M86cØ
70	PM0810	X	9375M	8.20G - 12 4G		6.0	10m	100	400		15	350- 550	50	150A	SiØ	A1adØ
71	PM0810L	X	9375M	8.20G - 12 4G		6.0	10m	100	400		15	350- 550	50	150A	SiØ	M86cØ
72▼#	S3006C	C-X	9375M	4 0G-12 4G		6.5	40m	200	200			100Ø	10	150	GA♦$	F27e
73▼#	S3006D	C-X	9375M	4.0G-12 4G		6.0	40m	200	200			100Ø	10	150	GA♦$	F27e
74▼#	S3006E	C-X	9375M	4 0G-12 4G		5.5	40m	200	200			100Ø	10	150	GA♦$	F27e
75#	SM153A,AM	S-X	9 375G	3 0G		6.0	20m	100	400				20	150	GA♦	F27a
76#	SM153B,BM	S-X	9 375G	3 0G		5.5	20m	100	400				2.0	150	GA♦	F27a
77#	SM153C,CM	S-X	9 375G	3 0G		5.0	20m	100	400				20	150	GA♦	F27a
78#	X6P10	X	9375M			7.5	10m	10	400		20	200-400			Si♦	F27d
79#	X6P11	X	9375M			7.0	10m	10	400		2.0	200-400			Si♦	F27d
80#	X6P12	X	9375M			6.5	10m	10	400		20	200-400			Si♦	F27d
81#	XTP10	X	9375M			75	10m	10	400		20	200-400			Si♦	A1ac
82#	XTP11	X	9375M			70	1.0m	10	400		2.0	200-400			Si♦	A1ac
83#	XTP12	X	9375M			6.5	1.0m	10	400		20	200-400			Si♦	A1ac
84#	GEM1	X	9500M	12G		80					1.43	170Ø	300m	100A	Ge	P2bØ
85#	GEM2	X	9500M	12G		8.0					1.43	170Ø	300m	100A	Ge	P2cØ
86#	GEM3	X	9500M	12G		85					1.43		300m	100A	GeØ	P2cØ
87#	GEM4	X	9500M	12G		8.5					1.43		300m	100A	GeØ	P2bØ
88#	SIM2	L-X	9 5G	-12G		11					14	280-420		100A	SiØ	P2cØ
89#	SIM3	X	9500M	8 20G - 12 4G		11					14	280- 420		100A	SiØ	P2cØ
90#	SIM5	L-X	9 5G	-12G		11					1.4	280-420		100A	SiØ	P2bØ
91#	SIM6	X	9500M	8 20G - 12 4G		11					14	280- 420		100A	SiØ	P2bØ
92#	1N23A	X	10000M		27		10m	100	400	80		300- 600	30	90S	Si	P3Ø
93	1N2510	X	10000M		15		10m	100	400	60		300- 500	1.0	70A	Si	P1bØØ
94	JAN1N1838	Ku	13300M	12 4G - 18 0G		32	50m	680	680		30	450- 750		90A	Ge	P9
95	1N4600		13300M	10 0G - 16 0G		95	1.0m	100	500		15	400- 565	10	150S	SiØ	P1b
96	1N4601		13300M	10 0G - 16 0G		88	1.0m	100	500		15	400- 565	1.0	150S	SiØ	P1b
97	1N4602		13300M	10.0G - 16 0G		8.0	1.0m	100	500		15	400- 565	10	150S	SiØ	P1b
98	D5391C		13300M	10 0G - 16 0G		75	10m	100			25	400- 565	10	150A	SiØ	P1b
99	L4153	X-Ku	13 3G	-14G		16	10m	10			20	50-250	30	85S	Ge*	F3gØ
100	L4154	X-Ku	13 3G	-14G		15	10m	10			20	50-250	30	100S	Ge*	F49bØ
101	L4154A	X-Ku	13 3G	-14G		12.5	500m	10		8 0Ø	20	50-250	30	100A	Ge*	F49bØ
102	L4154AM	X-ku	13 3G	-14G		12 5	500m	10		8 0Ø	2.0	50-250	30	100A	Ge*	F49bØ
103	L4154B	X-Ku	13.3G	-14G		11 5	500m	10		8 0Ø	2.0	50-250	30	100A	Ge*	F49bØ
104	L4154BM	X-ku	13 3G	-14G		11.5	500m	10		8 0Ø	2.0	50-250	30	100A	Ge*	F49bØ
105	L4155A	X-Ku	13 3G	-14G		12 5	500m	10		8 0Ø	2.0	50-250	30	100A	Ge*	F27abØ
106	L4155AM	X-Ku	13 3G	-14G		12 5	500m	10		8 0Ø	2.0	50-250	30	100A	Ge*	F27abØ
107	L4155B	X-Ku	13.3G	-14G		11 5	500m	10		8 0Ø	20	50-250	30	100A	Ge*	F27abØ
108	L4155BM	X-Ku	13 3G	-14G		11 5	500m	10		8 0Ø	20	50-250	30	100A	Ge*	F27abØ
109	L4156A	X-Ku	13 3G	-14G		12 5	500m	10		8 0Ø	20	50-250	30	100A	Ge*	F10gØ
110	L4156AM	X-Ku	13.3G	-14G		12 5	500m	10		8.0Ø	20	50-250	30	100A	Ge*	F10gØ

SYMBOLS AND CODES EXPLAINED IN INTERPRETER

8. MICROWAVE MIXER DIODES

IN ORDER OF (1) TEST FREQ (OR MIN FREQ WHEN TEST FREQ NOT AVAILABLE) and (2) TYPE No.

LINE No.	2 TYPE No.	BAND	1 TEST FREQ. (Hz)	FREQUENCY RANGE MIN - MAX (Hz)	NOISE MAX RATIO NR times	NOISE MAX REC. NF (dB)	TEST COND. FOR- Pin (W)	TEST COND. FOR- RL (Ω)	TEST COND. FOR- Zm (Ω)	MAX. CONV. LOSS (dB)	MAX. VSWR	IF IMPEDANCE RANGE MIN - MAX (Ω)	ABSOLUTE MAX RATING BURN-OUT (Erg)	ABSOLUTE MAX RATING MAX. TEMP (°C)	DESCRIPTION MAT.	DESCRIPTION DWG. No.
1	L4156B	X-Ku	13 3G	-14G		11.5	500m	10		8.0Ø	2.0	50-250	3.0	100A	Ge*	F10qØ
2	L4156BM	X-Ku	13.3G	-14G		11.5	500m	10		8.0Ø	2.0	50-250	3.0	100A	Ge*	F10qØ
3	L4157A	X-Ku	13.3G	-14G		12.5	500m	10		8.0Ø	2.0	50-250	3.0	100A	Ge*	M86aØ
4	L4157AM	X-Ku	13.3G	-14G		12.5	500m	10		8.0Ø	2.0	50-250	3.0	100A	Ge*	M86aØ
5	L4157B	X-Ku	13.3G	-14G		11.5	500m	10		8.0Ø	2.0	50-250	3.0	100A	Ge*	M86aØ
6	L4157BM	X-Ku	13.3G	-14G		11 5	500m	10		8 0Ø	2.0	50-250	3.0	100A	Ge*	M86aØ
7	L4165A	X-Ku	13.3G	-14G		12.5	500m	10		8.0Ø	2.0	50-250	3 0	150A	Ge*	F27abØ
8	L4165AM	X-Ku	13.3G	-14G		12.5	500m	10		8.0Ø	2.0	50-250	3.0	150A	Ge*	F27abØ
9	L4165B	X-Ku	13.3G	-14G		11.5	500m	10		8.0Ø	2.0	50-250	3 0	150A	Ge*	F27abØ
10	L4165BM	X-Ku	13.3G	-14G		11.5	500m	10		8.0Ø	2.0	50-250	3.0	150A	Ge*	F27abØ
11	L4166A	X-Ku	13.3G	-14G		12 5	500m	10		8.0Ø	2.0	50-250	3.0	150A	Ge*	F10qØ
12	L4166AM	X-Ku	13.3G	-14G		12.5	500m	10		8.0Ø	2.0	50-250	3 0	150A	Ge*	F10qØ
13	L4166B	X-Ku	13.3G	-14G		11 5	500m	10		8.0Ø	2.0	50-250	3.0	150A	Ge*	F10qØ
14	L4166BM	X-Ku	13.3G	-14G		11.5	500m	10		8.0Ø	2.0	50-250	3.0	150A	Ge*	F10qØ
15	L4167A	X-Ku	13.3G	-14G		12.5	500m	10		8.0Ø	2.0	50-250	3.0	150A	Ge*	M86aØ
16	L4167AM	X-Ku	13.3G	-14G		12.5	500m	10		8.0Ø	2.0	50-250	3.0	150A	Ge*	M86aØ
17	L4167B	X-Ku	13.3G	-14G		11 5	500m	10		8.0Ø	2.0	50-250	3.0	150A	Ge*	M86aØ
18	L4167BM	X-Ku	13.3G	-14G		11 5	500m	10		8.0Ø	2.0	50-250	3.0	150A	Ge*	M86aØ
19	L8213	Ku	13.3G	-14.5G		14	500m			6.0Ø		300Ø	3.0	125A	Si♦	F27ab
20	L8213A	Ku	13.3G	-14 5G		12	500m			6.0Ø		300Ø	3 0	125A	Si♦	F27ab
21	L8213AM	Ku	13.3G	-14 5G		12	500m			6.0Ø		300Ø	3.0	125A	Si♦	F27ab
22	L8213B	Ku	13.3G	-14.5G		11	500m			6 0Ø		300Ø	3.0	125A	Si♦	F27ab
23	L8213BM	Ku	13.3G	-14.5G		11	500m			6.0Ø		300Ø	3.0	125A	Si♦	F27ab
24	L8213M	Ku	13.3G	-14 5G		14	500m			6.0Ø		300Ø	3.0	125A	Si♦	F27ab
25	L8214	Ku	13.3G	-14.5G		14	500m			6.0Ø		300Ø	3.0	125A	Si♦	F10q
26	L8214A	Ku	13.3G	-14 5G		12	500m			6.0Ø		300Ø	3.0	125A	Si♦	F10q
27	L8214AM	Ku	13.3G	-14.5G		12	500m			6.0Ø		300Ø	3.0	125A	Si♦	F10q
28	L8214B	Ku	13.3G	-14.5G		11	500m			6.0Ø		300Ø	3.0	125A	Si♦	F10q
29	L8214BM	Ku	13.3G	-14.5G		11	500m			6.0Ø		300Ø	3.0	125A	Si♦	F10q
30	L8214M	Ku	13.3G	-14 5G		14	500m			6.0Ø		300Ø	3.0	125A	Si♦	F10q
31	L8215	Ku	13.3G	-14.5G		14	500m			6.0Ø		300Ø	3.0	125A	Si♦	F51
32	L8215A	Ku	13.3G	-14.5G		12	500m			6 0Ø		300Ø	3.0	125A	Si♦	F51
33	L8215AM	Ku	13.3G	-14.5G		12	500m			6.0Ø		300Ø	3.0	125A	Si♦	F51
34	L8215B	Ku	13.3G	-14.5G		11	500m			6.0Ø		300Ø	3.0	125A	Si♦	F51
35	L8215BM	Ku	13.3G	-14 5G		11	500m			6.0Ø		300Ø	3.0	125A	Si♦	F51
36	L8215M	Ku	13.3G	-14 5G		14	500m			6.0Ø		300Ø	3.0	125A	Si♦	F51
37	MA491A	X-Ku	13.3G	10G-16G		11	1.0m	100	500	7 0	1.6	365-565	1.0	150A	SiØ	P1b
38	MA491B	X-Ku	13.3G	10G-16G		10	1.0m	100	500	6.5	1.6	365-565	1 0	150A	SiØ	P1b
39	1N1838	X-Ku	13.5G	-14G		32	500u				3.0	450-750	1.3	90S	Ge	F3g
40#	AAY51	J	13500M	12.0G - 18 0G	1 1	7.5				5 2	1.5	220- 320	10	100	GeØ	P1bØØ
41#	AAY52	J	13500M	12 0G - 18 0G		8.5					1 5	220- 320	.10	100	GeØ	P1bØØ
42#	CV7728	Ku	13500M			9 5					1 6	250			Si	P1c
43#	CV7729	Ku	13500M			9.5					1 6	250			Si	P2d
44	1N78	Ku	16000M		2.5		1.0m	100	500	7 5		325- 625	1.0	70A	Si	P1bØØ
45	1N78A	Ku	16000M		1.5		1.0m	100	500	7.0	1.6	365- 565	1.0	70A	Si	P1bØØ
46	1N78B	Ku	16000M			10	1 0m	100	500	6.5	1 6	365- 565	1.0	70A	Si	P1bØØ
47	JAN1N78B	K	16000M		1.9	10	1.0m	100	500	6.5	1 6	365- 565		150A	Si	P1b
48	1N78C	Ku	16000M				1 0m	100	500	6.0	1 5	400- 565	1.0	150A	Si	P1bØØ
49	JAN1N78C,CM,CMR,CR	Ku	16000M		1.9	9 5	1.0m	100	500	6.0	1.5	400-565	500m	150A	Si	P1bØØ
50	1N78D	Ku	16000M			8 8	1.0m	100	500	6.0	1.5	400- 565	1 0	150A	Si	P1bØØ
51	1N78E	X-KU	16 0G	8.0G-18 0G	1.9	8.0	1.0m	100	500	6.0	1.5	400-565		150A	SiØ	P1bØØ
52	1N78F		16000M	8.00G - 18 0G	1 9	7 5	1 0m	100	500	6.0	1.5	400- 565	1.0	150S	Si	P1a
53	1N78G	C-KU	16.0G	8.0G-18.0G	1 9	7 0	1.0m	100	500	6.0	1.5	400-565	1.0	150S	Si	P1b
54	1N286A	X-K	16.0G	10G-22G	2 0		1.0m	100	400	7.5	3.0	250-450	.10	70A	Si	P1bØ
55	1N918	Ku	16000M		2.5		1.0m	100	500	7.5		325- 625	1 0	150A	Si	A31e
56	1N3205	Ku	16000M			9.75	1.0m	100	500	6 3	1.6	365- 565	1.0	150A	Si	P1bØØ
57	1N4603		16000M	12.5G - 17 5G		9.5	1.0m	100	500		1 5	400- 565	1.0	150S	SiØ	P1b
58	1N4604		16000M	12 5G - 17.5G		8.8	1.0m	100	500		1.5	400- 565	1 0	150S	SiØ	P1b
59	1N4605		16000M	12.5G - 17 5G		8 0	1.0m	100	500		1.5	400- 565	1.0	150S	SiØ	P1b
60▼	A2G132	Ku	16000M	12.4G-36.0G		6.0	2.0m	10			2.0	500Ø		150A	GA#♦	F83
61▼	A2G133	Ku	16000M	12.4G-36 0G		6.5	2.0m	10			2 0	500Ø		150A	GA♦#	F83
62▼	A2S122	Ku	16000M	12.4G-36.0G		6 5	1.0m	10			1 5	175-350		150A	Si♦	F83
63▼	A2S123	Ku	16000M	12 4G-36.0G		7.0	1.0m	10			2 0	175-350		150A	Si♦	F83
64▼	A2S128	Ku	16000M	12.4G-36 0G		7.0	1.0m	10			2.0Ø	175-350		150A	Si♦	M549
65#	BSM21	Ku	16000M	10 0G - 18 0G	1.8	9 8	1.0m	100	500	6.5	1 6	365- 565		85A	Si	P1bØØ
66	D4081	Ku	16000M		1 3	7.8	1.0m	100	500	5 7	1.6	365- 565	1 0	70A	SiØ	P1bØØ
67	D4081A	Ku	16000M		1 3	7.3	1.0m	100	500	5.7	1.6	365- 565	1 0	70A	SiØ	P1bØØ
68	D4082	Ku	16000M		2 5		1.0m	100	500	7.5		325- 625	1.0	150A	Si	P1bØØ
69	D4082A	Ku	16000M		1.5		1.0m	100	500	7.0	1 6	365- 565	1.0	150A	Si	P1bØØ
70	D4082B	Ku	16000M		1.3		1.0m	100	500	6 5	1.6	365- 565	1 0	150A	Si	P1bØØ
71	D4942	Ku	16000M	12 4G - 18 0G		9.5	1.0m	100	500		1 5	400- 565	1.0	150J	SiØ	P1bØ
72	D5278B	Ku	16000M	12 4G - 18 0G		10	1.0m	100	500				1 0		Si§	F51§
73	D5278C	Ka	16000M	12 0G-18.0G		9.5	1.0m	100	500				1 0	150S	SiØ	F85§
74	D5278D	Ku	16000M	12.0G-18.0G		8.8	1.0m	100	500				1.0	150S	SiØ	F85§
75	D5282C	Ku	16000M	12.4G-18.0G		9.5	1.0m	100			1 5	400-565	1.0	150S	SiØ	P1b
76	D5282D	Ku	16000M	12 4G-18 0G		8 8	1 0m	100			1 5	400-565	1.0	150S	SiØ	P1b
77	D5282E	Ku	16000M	12.4G-18 0G		8.0	1.0m	100			1 5	400-565	1.0	150S	SiØ	P1b
78	D5282F	Ku	16000M	12.4G - 18.0G		7 5	1 0m	100	500		1 5	400- 565	1.0	150S	SiØ	P1b
79	D5282G	Ku	16000M	12 4G-18 0G		7.0	1 0m	100			1.5	400-565	1 0	150S	SiØ	P1b
80	D5507	Ku	16000M	12 0G-18 0G		9 0	1.0m	100			1.8	300-600		150A	Si♦$	F85§Ø
81	D5507A	Ku	16000M	12 0G-18.0G		8 0	1.0m	100			1 8	300-600		150A	Si♦$	F85§Ø
82	D5507B	Ku	16000M	12 0G-18.0G		7.5	1.0m	100			1.8	300-600		150A	Si♦$	F85§Ø
83	D5507C	Ku	16000M	12.0G-18 0G		7 0	1.0m	100			1 6	300-600		150A	Si♦$	F85§Ø
84	D5905A	Ku	16000M	12.4G-18 0G		8.8	1 0m	100			1 5	400-565		150A	Si♦	DO37
85	D5905B	Ku	16000M	12.4G-18 0G		8 0	1.0m	100			1.5	400-565		150A	Si♦	DO37
86▼	D5905C	Ku	16000M			7 5	1 0m				1 5	400-565		150A	♦	P1bØ
87▼	D5905D	Ku	16000M			7.0	1.0m				1 5	400-565		150A	♦	P1bØ
88#	DC1301A	Ku	16000M	-18G		7 0					2.0	500	200m		GA	M520
89	DMF6107	Ku	16000M	12 0G-18 0G		7.5	1 0m				1.8	200-500		150A	Si$♦	F83Ø
90	DMF6107A	Ku	16000M	12 0G-18.0G		7.0	1 0m				1.6	200-500		150A	Si$♦	F83Ø
91	DMF6107B	Ku	16000M	12 0G-18 0G		6.5	1.0m				1 6	200-500		150A	Si$♦	F83Ø
92	DMF6132	Ku	16000M	12 0G-18 0G		7.5	1.0m				1 8	200-500		150A	Si$♦	F85Ø
93	DMF6132A	Ku	16000M	12 0G-18.0G		7 0	1 0m				1.6	200-500		150A	Si$♦	F85Ø
94	DMF6132B	Ku	16000M	12 0G-18 0G		6.5	1 0m				1.6	200-500		150A	Si$♦	F85Ø
95	HP5082-2721	Ku	16000M			7.0	1.0m	10			2.0	175-350			Si#♦	F83Ø
96	HP5082-2723	Ku	16000M			6.5	1 0m	10			1 5	175-350			Si#♦	F83Ø
97	L8209	Ku	16G	-18G		9 0	1 0	10		7 2Ø		300Ø	3 0	125A	Si♦	P1bØØ
98	L8209A	Ku	16G	-18G		8 0	1 0	10		6.2Ø		300Ø	3.0	125A	Si♦	P1bØØ
99	L8209AM	Ku	16G	-18G		8 0	1.0	10		6.2Ø		300Ø	3.0	125A	Si♦	P1bØØ
100	L8209B	Ku	16G	-18G		7 5	1 0	10		5.7Ø		300Ø	3 0	125A	Si♦	P1bØØ
101	L8209BM	Ku	16G	-18G		7.5	1.0	10		5.7Ø		300Ø	3.0	125A	Si♦	P1bØØ
102	L8209C	Ku	16G	-18G		7 0	1 0	10		5.2Ø		300Ø	3.0	125A	Si♦	P1bØØ
103	L8209CM	Ku	16G	-18G		7 0	1.0	10		5 2Ø		300Ø	3 0	125A	Si♦	P1bØØ
104	L8209M	Ku	16G	-18G		9.0	1.0	10		7 2Ø		300Ø	3.0	125A	Si♦	P1bØØ
105	L8210	Ku	16G	-18G		9.0	1.0	10		7.2Ø		300Ø	3.0	125A	Si♦	F51
106	L8210A	Ku	16G	-18G		8 0	1 0	10		6 2Ø		300Ø	3 0	125A	Si♦	F51
107	L8210AM	Ku	16G	-18G		8 0	1.0	10		6.2Ø		300Ø	3.0	125A	Si♦	F51
108	L8210B	Ku	16G	-18G		7 5	1 0	10		5.7Ø		300Ø	3 0	125A	Si♦	F51
109	L8210BM	Ku	16G	-18G		7 5	1 0	10		5.7Ø		300Ø	3.0	125A	Si♦	F51

SYMBOLS AND CODES EXPLAINED IN INTERPRETER

8. MICROWAVE MIXER DIODES

IN ORDER OF (1) TEST FREQ (OR MIN FREQ WHEN TEST FREQ NOT AVAILABLE) and (2) TYPE No.

LINE No	2 TYPE No.	BAND	1 TEST FREQ. (Hz)	FREQUENCY RANGE MIN - MAX (Hz)	NOISE MAX RATIO NR times	NOISE MAX REC. NF (dB)	TEST COND. FOR- Pin (W)	RL (Ω)	Zm (Ω)	MAX CONV LOSS (dB)	MAX. VSWR	IF IMPEDANCE RANGE MIN - MAX (Ω)	ABSOLUTE MAX RATING BURN-OUT (Erg)	MAX. TEMP (°C)	DESCRIPTION MAT.	DWG. No.
1	L8210C	Ku	16G	-18G		7.0	1 0	10		5 2Ø		300Ø	3.0	125A	Si♦	F51
2	L8210CM	Ku	16G	-18G		7.0	1.0	10		5.2Ø		300Ø	3.0	125A	Si♦	F51
3	L8210M	Ku	16G	-18G		9.0	1.0	10		7.2Ø		300Ø	3.0	125A	Si♦	F51
4	MA443	Ku	16000M	10.0G - 18.0G	2 5		1 0m	100	500	7.5		325- 625	60	150A	Si☑	P1bØ☑
5	MA443A	Ku	16000M	10.0G - 18 0G	1 5		1 0m	100	500	7 0	1 6	365- 565	60	150A	Si☑	P1bØ☑
6	MA443B	Ku	16000M	10.0G - 18 0G			1 0m	100	500		1 6	365- 565	.60	150A	Si☑	P1bØ☑
7	MA444	Ku	16000M	10 0G - 18 0G	2 5	12	1.0m	100	500	7 5		325- 625	.60	70A	Si☑	P1bØ☑
8	MA444A	Ku	16 0G	10G-18G	1 5	9.8	1 0m	100	500	7.0	1 6	365-565	60	70A	Si☑	P1bØ☑
9	MA444B	Ku	16000M	10 0G - 18 0G		8 8	1.0m	100	500	6 5	1 6	365- 565	60	70A	Si☑	P1bØ☑
10	MA444C	Ku	16000M		1 3	8.3	1 0m	100	500	6.0	1 5	400- 565	1.0	70A	Si	P1bØ☑
11	MA444D	Ku	16000M		1.3	7.8				5.7	1 6	400- 565			Si	P1bØ☑
12	MA445	Ku	16000M	10.0G - 18 0G	2 5		1 0m	100	500	7.5		325- 625	1.0	150A	Si☑	P1bØ☑
13	MA445A	Ku	16000M	10 0G - 18.0G	1 5	9.8	1 0m	100	500	7.0	1.6	365- 565	1.0	150A	Si☑	P1bØ☑
14	MA445B	Ku	16000M	10.0G - 18.0G	1.3	8.8	1.0m	100	500	6.5	1 6	365- 565	1.0	150A	Si☑	P1bØ☑
15	MA490	Ku	16000M	12.5G - 17 5G	2 5		1.0m	100	500	7.5	2 0	325- 625	1 0	150A	Si☑	P1bØ☑
16	MA490A	Ku	16000M	12.5G - 17 5G	1 5		1.0m	100	500	7.0	1.6	365- 565	1 0	150A	Si☑	P1bØ☑
17	MA490B	Ku	16000M	12.5G - 17.5G	1 5	8.8	1.0m	100	500	6 5	1 6	365- 565	1.0	150A	Si☑	P1bØ☑
18	MA491	X-Ku	16 0G	10G-16G		13	1 0m	100	500	7.5	2.5	325-625	1.0	150A	Si☑	P1b
19	MA4124	Ku	16000M	10.0G - 18.0G		27	1.0m	100	500	7.5		325- 625	1 0	70A	Si☑	P1bØ☑
20	MA4124A	Ku	16000M	10.0G - 18 0G		24	1.0m	100	500	7 5		325- 625	1 0	70A	Si☑	P1bØ☑
21	MA4861C	Ku	16000M	12.5G - 17 5G	1 9	9.5	1 0m	22		6.0	2 0	400- 565	10	150A	♦	D037
22	MA4861D	Ku	16000M	12.5G - 17 5G	1 9	8.8	1.0m	22		6.0	2 0	400- 565	10	150A	♦	D037
23	MA4861E	Ku	16000M	12.5G - 17 5G	1 9	8.0	1.0m	22		6.0	2 0	400- 565	10	150A	♦	D037
24	MA4861F	Ku	16000M	12.5G - 17 5G	1.9	7.5	1 0m	22		6.0	2.0	400- 565	10	150A	♦	D037
25	MA4861G	Ku	16000M	12.5G - 17 5G	1 9	7.0	1 0m	22		6.0	2.0	400- 565	10	150A	♦	D037
26	MA4861H	Ku	16000M	12.5G - 17 5G	1 9	6.5	1 0m	22		6.0	2 0	400- 565	10	150A	♦	D037
27	MA40012	Ku	16G			8.0					1.8	200-500	5 0	150A	♦☑	F32fØ
28	MA40013	Ku	16G			7 5					1 6	200-500	5 0	150A	♦☑	F32fØ
29	MA40014	Ku	16G			7.0					1.6	200-500	5.0	150A	♦☑	F32fØ
30	MA40015	Ku	16G			6.5					1 6	200-500	5.0	150A	♦☑	F32fØ
31#	MD0219	Ku	16G			7 0	7 0m				1.5	130-230	10	150	Si	F27ab
32#	MD0220	Ku	16G			7.5	7 0m				1 5	130-230	10	150	Si	F27ab
33#	MD0221	Ku	16G			8.0	7.0m				1.5	130-230	10	150	Si	F27ab
34	1N26	K	23984M		2 5		1 0m	100	500	8 5		300- 600	10	70A	Si	P1bØ☑
35	1N26A	K	23984M		2 0		1 0m	100	500	7.5	1.6	300- 600	10	70A	Si	P1bØ☑
36	1N26C	K	23984M		1 5	9 5	1.0m	100	500	7.5	1 5	400- 600	30	150A	Si	P1bØ☑
37#	BSM31	K	23984M	18.0G - 26 5G	3 0	13 8	1 0m	100	500	8.5	3 5	300- 600		85A	Si	P1bØ☑
38	JAN1N26B,BM,BMR,BR	K	24000M		2.0	11	1 0m	100	500	7 5	1.5	400- 600		150A	Si	P1bØ
39	MA494B	Ka	34 8G		2 0	10				6.5	1 6	400-800	30		Si	P1
40#	GEM8	Q	34815M	34 0G - 35 5G		13					1 8	300- 600		100	Ge☑	P4a
41#	GEM9	Q	34815M	34.0G - 35 5G		13					1 8	300- 600		100	Ge☑	P4b
42#	SIM8	Q	34815M	34 0G - 35 5G		17					1 4	300- 600		100A	Si☑	P4a
43#	SIM9	Q	34815M	34 0G - 35 5G		17					1 4	300- 600		100A	Si☑	P4b
44	1N53	Ka	34850M		2 5		1 0m	100	500	8.5	1 6	400- 800	30	70A	Si	P1Ø☑
45	JAN1N53	Ka	34850M		2 5		1.0m	100	500	8.5	1 6	400- 800		70A	Si	P1
46	1N53A	Ka	34860M		2 5		1.0m	100	500	6.5	1 6	400- 800	30	70A	Si	P1Ø☑
47	1N53B	Ka	34860M		2 0	10	1.0m	100	500	6.5	1 6	400- 800	30	70A	Si	P1Ø☑
48	JAN1N53B,BM,BMR,BR	Ka	34860M		2.0	10	1 0m	100	500	6.5	1 6	500- 700		150A	Si	P1Ø
49	1N53C	Ka	34860M		2.0	9 0	1.0m	100	500	6.5	1 6	400- 800	30	70A	Si	P1Ø☑
50	1N53D	Ka	34860M		2 0	9.0	1.0m	100	500	6 5	1.6	400- 800	30	150A	Si	P1Ø☑
51#	1N4939	Ka	34860M	26 0G - 40 0G	2.5	10 5	.50m	15	500	6.5	1.8	500-1000		150S	Ge	F36b§
52#	AAY34	Q	34 86G	26G-40G	1.6	10.5				5.5	1.8	500-1000	30m	150J	Ge☑	F79
53#	BSM41	Ka	34860M	26 5G - 40.0G	3.0	13.8	1 0m	100	500	8.5	1.6	400- 800		85A	Si	P1☑
54#	BSM42	Ka	34860M	26.5G - 40 0G	2 5	11.4	1 0m	100	500	6.5	1.6	400- 800		85A	Si	P1☑
55	D5253B	Ka	34860M	26.5G-40 0G		10	1 0m	100					300m	150S	Si☑	F85§
56	D5253C	Ka	34860M	26.5G-40.0G		9 0	1 0m	100					300m	150S	Si☑	F85§
57	D5253D	Ka	34860M	26.5G-40 0G		8.0	1.0m	100					300m	150S	Si☑	F85§
58	D5253E	Ka	34860M	26 5G-40 0G		7 0	1 0m	100					300m	150S	Si☑	F85§
59▼	D5353B	Ka	34860M		2 0	10	1 0m			6.5	1 6	400-800	100m	150A	☑	P1Ø
60▼	D5353C	Ka	34860M		2 0	9.0	1 0m			6.5	1.6	400-800	100m	150A	☑	P1Ø
61▼	D5353D	Ka	34860M		2.0	8.0	1 0m			6.5	1 6	400-800	100m	150A	☑	P1Ø
62▼	D5353E	Ka	34860M		2.0	7 5	1 0m			6.0	1 6	400-800	100m	150A	☑	P1Ø
63▼	D5353F	Ka	34860M		2 0	7 0	1.0m			5.5	1 6	400-800	100m	150A	☑	P1Ø
64	D5509	Ka	34860M	26.5G-40.0G		10	1.0m	100				300-700		150A	Si♦$	F85§
65	D5509A	Ka	34860M	26 5G-40 0G		9 0	1 0m	100				300-700		150A	Si♦$	F85§
66	D5509B	Ka	34860M	26 5G-40.0G		8 0	1.0m	100				300-700		150A	Si♦$	F85§
67	D5509C	Ka	34860M	26 5G-40 0G		7.5	1 0m	100				300-700		150A	Si♦$	F85§
68▼	D5509D	Ka	34860M			7 0	1 0m					300-700		150A	♦	F83Ø
69	1N2792		69750M	50 0G - 75.0G	2 5	17 3				13.5	2.0	250- 500		55A	Ge☑	F16§
70	JAN1N2792		69750M		2.5	16 5				13.5	2.0	250- 400		55A	Ge	F16
71	1N2792A		69750M	50.0G - 90 0G	2.5	14				12Ø	2.0	250- 500		55A	Ge☑	F16§Ø
72	1N2792B		69750M	50 0G - 90.0G	2 5	13				11Ø	2.0	250- 500		55A	Ge☑	F16§Ø
73	D5252	Q-W	70 0G	50G-90G		18	1.0m	100	400			300-700			Si$	M381
74	L4190	E	85000M	60.0G - 90.0G	2 5	25				18Ø	2 5Ø	550Ø		55A	Ge☑	F16§Ø
75	L4190A	E	85000M	60.0G - 90.0G	2 5	23				17Ø	2.5Ø	550Ø		55A	Ge☑	F16§Ø
76	L4190B	E	85G	60G-90G	2 5	20				16Ø	2.5Ø	550Ø		55A	Ge☑	F16§Ø
77	L4190C	E	85000M	60.0G - 90 0G	2.5	18				15Ø	2 5Ø	550Ø		55A	Ge☑	F16§Ø

SYMBOLS AND CODES EXPLAINED IN INTERPRETER

9. MICROWAVE VIDEO DETECTOR DIODES

IN ORDER OF (1) TEST FREQ (OR MIN FREQ WHEN TEST FREQ NOT AVAILABLE) and (2) TYPE No.

LINE No.	2 TYPE No.	BAND	1 TEST FREQ. (Hz)	FREQUENCY RANGE MIN - MAX (Hz)	MIN FIG OF MERIT FIGURE of MERIT	at PWR. LVL. (W)	at R (Ω)	MIN OUTPT Vo (V)	at PWR. LVL. -dBm	MIN TANG SENS. -dBm	VIDEO IMPEDANCE RANGE MIN - MAX (Ω)	at MAX. VOLT. (V)	ABSOLUTE MAX RATING BURN-OUT (W)	MAX. TEMP (°C)	DESCRIPTION MAT.	DWG. No.
1	JAN1N358A,AM,AMR,AR															
		S-X			30	5.0u	10k	30m	20	45	4500-18000			70A	Si	P1cØ
2	1N630A	L-X		1000-12400	30	200m				45	4500-18000				Si	P1a
3	1N1610	S-X		3000-12400	15			15m		40	4500-18000		100m	150A	Si	P1aΔ
4▼	MS1040	S	4 0		200			200m	10	54	800		60m		Ge	F10q
5▼	MS1041	C	4 0		250			200m	10	55	250		60m		Ge	F10q
6▼	MS1042	X	8 0		120			100m	10	52	100		25m		Ge	F10q
7▼	MS1043	X	8 0		85			100m	10	50	85		150m		Ge	F10q
8	1N258	S	3.0M		85	5 0u		1 2k			4.0k - 22k	5 0m		70A	SiØ	P3
9#	BSV11	L	100M	1 00G							4000-20000	5 0m	325m	150A	Si	A1
10	1N2771		750M										1 0		Si	P3
11#	CS31A	L	1000M												Si	P3
12#	DC3012S	S	3000M	500M-4 0G	80					52	125				Ge	M520
13	MA40024	S	3 0G							-48	1000-2000		10 Ø	150A	♦Ø	F32fØ
14	MA40025	S	3 0G							-52	1000-2000		10 Ø	150A	♦Ø	F32fØ
15	1N4379	S	3 060G		100	5 0u	12k				5000-25000	5 0m		150S	SiØ	DO7
16#	8032	S	3 060G	2 0G-4.0G	100	5.0u				54	5000-25000	5 0m			Si	P3c
17#	8132	S	3060M	2 00G - 4.00G	100	5 0u				54	5000-25000	5 0m			Si	P3c
18	MA4123	S	3060M	2 00G - 4.00G						45	4500-18000				Si	DO7
19	MA4123A	S	3060M	2 00G - 4 00G						48	4500-18000				Si	DO7
20	MA4123B	S	3060M							50	4 5k-18k	5 0m	2 0m		Si	DO7
21	MA4142	S	3060M	2 00G - 4 00G	100						5000-25000			150A	Si	P3§
22	MA4142A	S	3060M	2 00G - 4 00G	200						5000-25000			150A	Si	P3§
23	MA4613	S	3060M		300					55	100Ø				Si	F56
24	MA4616	S	3 060G		1000	5 0u	12k			60	300Ø				Si	F56
25	MA41510	S	3060M							45	4500-18000	5.0m	2.0m		Si	A1ad
26	MA41511	S	3060M							48	4500-18000	5 0m	2.0m		Si	A1ad
27	MA41512	S	3060M							50	4500-18000	5 0m	2 0m		Si	A1ad
28	PD0804	S	3 060G	2 0G-4 0G						50	4500-18000	5 0m	2.0m		Si	A1ad
29	PD0804L	S	3060M	2 00G - 4 00G						50	4500-18000	5.0m	2.0m		Si	M86cØ
30	PD0805	S	3060M	2.00G - 4.00G						48	4500-18000	5.0m	2 0m		Si	A1ad
31	PD0805L	S	3060M	2 00G - 4.00G						48	4500-18000	5 0m	2.0m		Si	M86cØ
32	PD0806	S	3060M	2 00G - 4 00G						45	4500-18000	5.0m	2 0m		Si	A1ad
33	PD0806L	S	3060M	2 00G - 4 00G						45	4500-18000	5 0m	2 0m		Si	M86cØ
34	1N32	S	3295M	2 00G - 4.00G	85	5.0u					4000-22000		360m		Si	P3Ø
35▼	JAN1N32	S	3 295G		85	5 0u	1 2k				4000-22000	5 0m		70A	Si	P3
36	1N2102	L-S	3 295G	50M-4 0G	85	5 0u					4000-22000	5 0m	50	150A	SiØ	P3§
37	AEL10	P-X	5 0G	50M-11G	150	1 0m				55	1500-3000				Si	P3Ø
38	AEL10H	P-X	5 0G	50M-11G	150	1 0m				55	1500-3000				Si	P3Ø
39	1N358	L-X	6 75G	1 0G-12 4G	15	5 0u	1 2k	15m	20	40	4500-18000	5 0m	20m	70A	SiØ	P1aØΔ
40	1N358A	L-X	6 75G	1 0G-12 4G	30	5 0u	1.2k	30m	20	45	4500-18000	5 0m	20m	70A	SiØ	P1aØΔ
41	1N369	S-X	6 75G	3.0G-12.4G	15	5 0u	1 2k	15m	20	40	4500-18000	5 0m	20m	70A	SiØ	P1aØΔ
42	1N369A	L-X	6 75G	1 0G-12 4G	15	5 0u	1 2k	15m	20	40	4500-18000	5 0m	20m	70A	SiØ	P1aØΔ
43	1N630	L-X	6 75G	1 0G-12 4G	15	5 0u	1 2k	15m	20	40	4500-18000	5.0m	17	150A	Si	P1aØΔ
44	1N1611	X	9000M	8 20G - 12 4G	130	1 0u				50	1700- 3100		250m	150A	Si	P3Ø
45	1N1611A	C-X	9 0G	4.0G-10G	220	1 0u				52	1700-3100		25	150A	Si	P3Ø
46	1N1611B	C-X	9.0G	4 0G-10G	220					52	1700-3100				Si	P3Ø
47#	BSV01	C-X	9 0G	4 0G-12 5G	130	5 0u				50	1700-3100		.32	150A	Si	P3a
48#	BSV02	C-X	9.0G	4 0G-12 5G	220	5 0u				52	1700-3100				Si	P3a
49	D4072	X	9000M	8 20G - 12 4G	130					51	1700- 3100		325m		Si$	P3a§
50	D4072A	X	9000M	8.20G - 12 4G	220					53	1700- 3100		325m		Si$	P3a§
51	D4072B	X	9000M	8 20G - 12 4G	220					53	1700- 3100		325m		Si$	P3a§
52	D5012	X	9000M	8.20G - 12 4G	220					53	1700- 3100		175m		Si$	A1da§
53	D5036	X	9000M	8.20G-12 4G	220	1 0u	1 2k			53	400-600			150S	SiØ	A1ak§Ø
54	D5036A	X	9000M	8 20G-12 4G	300	1 0u	1.2k			55	400-600			150S	SiØ	A1ak§Ø
55	D5236	X	9000M	8 20G-12 4G	220	1 0u	1.2k			53	600-850	50u	100m	150S	SiØ	F85§Ø
56	K408	X	9000M	8 20G - 12 4G	130					50	1700- 3100		1 0mØ		Si	P3Ø
57	K408A	X	9000M	8 20G - 12 4G	160					51	1700- 3100		1 0mØ		Si	P3Ø
58	K408B	X	9000M	8 20G - 12 4G	220					52	1700- 3100		1 0mØ		Si	P3Ø
59	MA408A	X	9000M		160					51	1 7k- 3.1k		1 0m		Si	DO22Ø
60	MA418	C-X	9 0G	4 0G-10G	130	5 0u					1700-3100				SiØ	P3a§
61	MA418A	C-X	9 0G	4 0G-10G	160	5 0u	1 2k				1700-3100			70A	SiØ	P3a§
62	MA418B	C-X	9 0G	4 0G-10G	220	5 0u					1700-3100				SiØ	P3a§
63	MA452	X	9000M		130					50	1 7k- 3 1k		1 0m		Si	DO22Ø
64	MA452A	X	9000M	8 20G - 12 4G	160	5 0u				51	1700- 3100			150A	SiØ	P3Ø
65	MA461	C-X	9 0G	4 0G-10G	130	5 0u				50	1700-3100				SiØ	P3§
66	MA461A	C-X	9 0G	4 0G-10G	160	5 0u				51	1700-3100				SiØ	P3§
67	MA461B	C-X	9 0G	4 0G-10G	220	5 0u				52	1700-3100				SiØ	P3§
68	MA4128	C-X	9 0G	4.0G-12 5G	130	5 0u				50	1700-3100				Si	P3Ø
69	MA4129	C-X	9 0G	4 0G-10G	130	5.0u	1 2k				1700-3100			150A		P3aØ
70	1N31	X	9 375G	8 2G-12 4G	55	5 0u	1.2k				6000-23000	5 0m	20m	70A	Si	P1bØ
71	JAN1N31	X	9375M		55	5 0u	1.2k				6000-23000	5 0m		70A	Si	P1b
72	1N31A	X	9375M	8 20G - 12 4G	200	5 0u	1.2k				3000-17000	5 0m	200m	150S	SiØ	P1b
73	1N76	X	9375M	8 20G - 12 4G				5 0m					20m	70A	SiØ	P1bØØ
74	1N76A	X	9375M	8 20G - 12 4G		15u		16m					20m	70A	SiØ	P1bØØ
75	1N76C	X	9375M	8.20G - 12 4G											Si	P1bØ
76	1N833	X	9375M	8 20G - 12 4G	15	5 0u	1 2k			40	4500-18000	5 0m		150A	SiØ	A196b
77	1N833A	X	9375M	8 20G - 12 4G						45	4500-18000				Si	DO7
78	1N2127	L-X	9375M	1000-12400				70m	15				200m	125A	SiØ	P1aΔ
79	1N2127A	L-X	9375M	1000-12400				70m	15				200m	125A	SiØ	P1aΔ
80	1N3143	C-X	9375M	4000-10000				11m	30					150A	SiØ	P3
81	1N3778	C-X	9375M	4000-10000											Si	P3§Δ
82#	8031	X	9375M	8 20G - 12 4G	55	5 0u				47	5000-25000	5.0m			Si	P3c
83#	8131	X	9 375G	8 2G-12.4G	55	5 0u				47	5000-25000	5 0m			Si	P3c
84#	8231	X	9375M	8 20G - 12 4G	55	5 0u					5000-25000				Si	P3a
85#	AEY17	X	9375M	1 00G - 18 0G	120					53	300Ø	1 0m		150A	Ge	F36b
86#	CS4B	X	9375M	-12 0G											Si	P2a
87	CV2226	X	9375M	4 00G - 12 0G		1 0u					- 7000				Si	P2aØ
88	CV2258	X	9375M	- 12 0G		5 0u					1900- 7350				Si	P2
89	CV2355	X	9375M	- 12 0G		5 0u					2000- 7000				Si	P2
90	CV2356	X	9375M	- 12 0G		5 0u					2000- 7000				Si	P2
91	CV2357	X	9375M	- 12 0G		5 0u					2000- 7000				Si	P2
92#	CV7180	X	9375M							51	700				Si	P2d
93#	CV7181	X	9375M							51	700				Si	P2d
94#	CV7182	X	9375M							51	700				Si	P2d
95#	CV7183	X	9375M							51	700				Si	P2d
96	D5093	X	9375M	8 20G - 12 4G	15					40	4500-18000		175m		Si$	A1am§
97	D5093A	X	9375M	8.20G - 12 4G						45	4500-18000		175m		Si$	A1am§
98#	DC3010	X	9375M	-18G	120					53	300				Ge	F51
99#	DC3012	X	9375M	2.0-12G	120					53	300				Ge	M520
100#	DC3014	X	9375M	2 0-12G	120					53	300				Ge	F10m
101	L4170		9 375G	-14G						55	1 5kØ				Ge*	F10qØ
102	L4171		9 375G	-14G						54	500Ø				Ge*	F10qØ
103	L4172		9 375G	-14G						54	500Ø				Ge*	F10qØ
104	L4173		9 375G	-14G						52	250Ø				Ge*	F10qØ
105	L4174		9.375G	-14G						51	100Ø				Ge*	F10qØ
106	L4175		9.375G	-14G						49	75Ø				Ge*	F10qØ
107	MA425	X	9375M	8 20G - 12 4G											SiØ	P3b§
108	MA4614	X	9375M		100					50	75Ø				Si	F56
109	MA4617	X	9375M		300					55	150Ø				Si	F56

SYMBOLS AND CODES EXPLAINED IN INTERPRETER

9. MICROWAVE VIDEO DETECTOR DIODES

IN ORDER OF (1) TEST FREQ (OR MIN FREQ WHEN TEST FREQ NOT AVAILABLE) and (2) TYPE No.

LINE No.	2 TYPE No.	BAND	1 TEST FREQ. (Hz)	FREQUENCY RANGE MIN - MAX (Hz)	MIN FIG OF MERIT FIGURE of MERIT	at PWR. LVL. (W)	at R (Ω)	MIN OUTPT Vo (V)	at PWR. LVL -dBm	MIN TANG. SENS. -dBm	VIDEO IMPEDANCE RANGE MIN - MAX (Ω)	at MAX. VOLT. (V)	ABSOLUTE MAX RATING BURN-OUT (W)	MAX. TEMP (°C)	MAT.	DESCRIPTION DWG. No.
1	MA41513	X	9375M							40	4500-18000	5 0m	2 0m		Si	A1ad
2	MA41514	X	9375M							45	4500-18000	5 0m	2.0m		Si	A1ad
3	MA41515	X	9375M							48	4500-18000	5.0m	2.0m		Si	A1ad
4	PD0801	X	9375M	8 20G - 12 4G						48	4500-18000	5 0m	2.0m		Si	A1ad
5	PD0801A	X	9375M	8 20G - 12.4G						48	1700- 6000	180m	2 0m		Si	A1ad
6	PD0801AL	X	9375M	8 20G - 12 4G						48	1700- 6000	180m	2.0m		Si	M86cØ
7	PD0801L	X	9375M	8 20G - 12.4G						48	4500-18000	5 0m	2.0m		Si	M86cØ
8	PD0802	X	9375M	8.20G - 12 4G						45	4500-18000	5.0m	2.0m		Si	A1ad
9	PD0802L	X	9375M	8.20G - 12.4G						45	4500-18000	5.0m	2.0m		Si	M86cØ
10	PD0803	X	9375M	8 20G - 12 4G						40	4500-18000	5 0m	2.0m		Si	A1ad
11	PD0803L	X	9375M	8 20G - 12 4G						40	4500-18000	5.0m	2.0m		Si	M86cØ
12	PD0807	X	9375M	8 20G - 12 4G						55	1700- 6000	180m	2.0m		Si	A1ad
13	PD0807L	X	9375M	8.20G - 12 4G						55	1700- 6000	180m	2 0m		Si	M86cØ
14	PD0808	X	9375M	8.20G - 12 4G						50	4500-18000	5 0m	2.0m		Si	A1ad
15	PD0808L	X	9 375G	8.2G-12.4G						50	4500-18000	5.0m	2 0m		Si	M86cØ
16♦	A2S201	X	10000M	5.20G-10 9G						58	-1600			150A	Si♦	M549
17♦	A2S202	X	10000M	5 20G-10 9G						55	-1800			150A	Si♦	M549
18▼	A2S206	X	10000M	5.20G-10 9G						58	-1600			150A	Si♦	F83
19▼	A2S207	X	10000M	5 20G-10 9G						55	-1800			150A	Si♦	F83
20	AEL13	Ku	10G	8.0G-18G	180	100u				54	2000-4000				Si	P1bØ
21	MA40026	X	10G							-48	1000-2000		5 0 Ø	150A	♦Ø	F32fØ
22	MA40027	X	10G							-52	1000-2000		5.0 Ø	150A	♦Ø	F32fØ
23	D5691		11000M	1 00G-12.0G						45	5000-7000		100m	150S	♦	A1akØ
24	D5691A		11000M	1 00G-12G						48	5000-7000		100m	150S	♦	A1akØ
25	D5754		11000M	1 00G-12 0G						47	5000-7000		100m	150A	♦	F85§
26	D5754A		11000M	1 00G-12 0G						50	5000-7000		100m	150A	♦	F85§
27	D5634	L-X	12.4G	1 0G-12 4G	30	5 0u	1.2k	30m	20	45	4500-18000	5 0m		150A	SiØ	P1b
28	D5638	L-X	12 4G	1 0G-12 4G	30	5 0u	1 2k	30m	20	45	4500-18000	5 0m		150A	SiØ	P1c
29	MA4615		13000M		50					47	60Ø				Si	F56
30	MA4618		13300M		160					52	100Ø				Si	F56
31	MA4147		14G	80G-150G						35				100A	SiØ	M139
32	1N2926	X-K	16G	10G-21G	15	5 0u	1 2k			40	-18000	5 0m	20m	70S	SiØ	P1b
33	1N2926A	X-K	16G	10G-21G	30	5 0u	1 2k			45	-18000	5.0m	20m	70S	SiØ	P1b
34#	AEY29	J	16G	12 0G-18.0G	50					53	300Ø	1.0m		100A	Ge	P1bØ
35	D4194	Ku	16000M	12 4G - 18 0G	100					48	4500-18000		200m		Si$	P1b§
36	D4194A	Ku	16000M	12 4G - 18.0G	200					51	4500-18000		200m		Si$	P1b§
37	MA4135	Ku	16000M												Si	P1b
38	MA40028	Ku	16G							-45	1000-2000		5.0 Ø	150A	♦Ø	F32fØ
39	MA40029	Ku	16G							-50	1000-2000		5 0 Ø	150A	♦Ø	F32fØ
40#	DC3011	Ku	16500M	12G-18G	60					53	300				Ge	P1c
41	AEL14	K	23G	18G-26.5G	200	100u				52	4500-1800				Si	P1b§
42	D4195	K	24000M	18.0G - 26 5G	100					48	4500-18000		200m		Si$	P1b§
43	D4195A	K	24000M	18 0G - 26 5G	200					51	4500-18000		200m		Si$	P1b§
44	AEL16	P-X	33G	100k-10G						50	1000 min				Si	P1Ø
45	1N446	K-Ka	34.8G	26G-40G	15	5 0u	1 2k			40	3000-23000	5.0m	75m	70A	Si	P1ØØ
46	D4196	Ka	35000M	26 5G - 40 0G	50					45	4500-18000		90m		Si$	P1§
47	D4196A	Ka	35000M	26 5G - 40.0G	100					48	4500-18000		90m		Si$	P1§
48	D5733		35000M	26.5G-40 0G						40	6000-8000		50m	150A	♦	F85§
49	D4074	Q-W	60G	40G-80G	25					40	-23000		74m		SiØ	M88
50♦	D4074A	Q-W	60G	40G-80G	50					45	-23000		75m	70A	$	M88
51	MA441		69720M	40.0G - 75 0G						35				100A	SiØ	M12
52	D5233	X	9375G	8.20G-12 4G	15	5 0u	1.2k			40	4500-18000	5 0m	100m	150S	SiØ	F85§Ø
53#	CV7374	Ku	17500G							50	700				Si	P1c

SYMBOLS AND CODES EXPLAINED IN INTERPRETER

10 VOLTAGE VARIABLE CAPACITORS & VARACTOR DIODES

IN ORDER OF (1) TYPICAL CAPACITANCE, (2) TEST VOLTAGE, and (3) TYPE No.

LINE No.	3 TYPE No.	MINIMUM CUTOFF FREQUENCY (Corresponding to Type Numbers in previous column) (Hz)	(Hz)	(Hz)	(Hz)	(Hz)	(Hz)	TYP. CAP. 1 CAP. Cj (F)	2 at TEST VOLT (V)	CAPACITANCE RANGE (for V = 0 to PIV) Ø - at TEST VOLT. (pF)	PIV (V)	Q FACTOR MIN. Q	at TEST FREQ. (Hz)	MAX. SER. RES. Rs (Ω)	MAX. DISS. @ 25°C (W)	DESCRIPTION MAT.	DWG. No.
1#	1S1617									2.1-65;0-15V$	25	150				Si$	A1bw
2#	1S1618									2.1-65;0-15V$	25	150				Si$	A1bw
3#	1S1619									3.0-50;0-15V$	20	70				Si$	A1bw
4	MS3136	120															
5	MS3166	120															
6	MS3256	120															
7	MS4156	120															
8	MS4166	120															
9	MS4206	120															
10	MS4256	120															
11	PL0520-1,2,3,4		5.0G	10G	15G	20G				.10 - .40Ø	24	Ø	10G			Si	F10p
12	PL0520A,B-F	30G	40G	50G	60G	70G	80G			.10- 40Ø	24	Ø	10G		350m	Si	F10p
13	PL0520G,H,J-L	90G	100G	120G	140G	160G				.10-.40Ø	24	Ø	10G		350m	Si	F10p
14	PL0520N,P	180G	200G							.10- 40Ø	24	Ø	10G		350m	Si	F10p
15	PL0543A,B-E	30G	40G	50G	60G	70											
16	VAS11N10,N16,N18,N20	200G							0.0	.50-3.0†	10				5 0	Si$	Z42
17	VAS12N10,N16,N18,N20	200G							0.0	.50-3.0†	10				5.0	Si$	Z42
18	VAS21N10,N16,N18,N20	200G							0.0	.50-3 0†	20				5 0	Si$	Z42
19	VAS22N10,N16,N18,N20	200G							0.0	50-3 0†	20				5 0	Si$	Z42
20	VAS31N10,N16,N18,N20	200G							0 0	.50-3 0†	30				5 0	Si$	Z42
21	VAS32N10,N16,N18,N20	200G							0.0	.50-3.0†	30				5.0	Si$	Z42
22	VAS41N10,N16,N18,N20	150G							0.0	50-3.0†	40				5 0	Si$	Z42
23	VAS42N10,N16,N18,N20	150G							0.0	.50-3.0†	40				5 0	Si$	Z42
24	VAS43N10,N16,N18,N20	150G							0 0	50-3 0†	40				5 0	Si$	Z42
25	VAS52N10,N16,N18,N20	150G							0.0	50-3 0†	50				5 0	Si$	Z42
26	VAS53N10,N16,N18,N20	100G							0 0	.50-3.0†	50				5 0	Si$	Z42
27	VAS63N10,N16,N18,N20	100G							0 0	50-3 0†	60				5.0	Si$	Z42
28	1N4885								6.0	28-39Ø	150 $			.70	20	Si	DO4
29	1N4886								6 0	28-39Ø	120 $			80	20	Si	DO4
30	PL0581A,B,C	30G	40G	50G					6.0	.40-1.0Ø	150	Ø	10G			Si	F10p
31	PL0591A	30G							6 0	40-1 0Ø	200	Ø	10G			Si	F10p
32#	SFD2401FL,GL,HL	100G	150G	200G					6.0	200f-500fØ	30				750m	Si$	F27d
33#	SFD2402EL,FL,GL	80G	100G	150G					6.0	200f-500fØ	60				1.0	Si$	F27d
34#	SFD2403EL,FL,GL	80G	100G	150G					6 0	200f-500fØ	90				1.5	Si$	F27d
35#	SFD2404EL,FL,GL	80G	100G	150G					6 0	200f-500fØ	120				2.0	Si$	F27d
36#	SFD7422F	100G							6 0	1 0-1.5Ø	60				4.0	Si	S215b
37#	SFD7432E	80G							6.0	1.5-2 2Ø	60				5.0	Si	S215b
38#	SFD7433C	40G							6 0	3.5-5 0Ø	90				8.0	Si	S215c
39#	SFD7443B	20G							6 0	5.0-6.5Ø	100				10	Si	S215c
40	VAB805N20	175							6 0	.50- 70Ø	40					Si	F27ac
41	MS3130,1,2,3,4,5	10G	20G	40G	60G	80G	100G	100f	6 0	20-1 1	30				300m	GA	P3
42	PA0100H,J-L,N	100G	120G	140G	160G	180G		10p	6 0	05 - .15Ø	6 0	Ø	10G		20	Si	F27d
43	PA0100P,Q,S-V	200G	220G	240G	260G	280G	300G	100f	6 0	05- 15Ø	6 0	Ø	10G		200m	Si	F27d
44	PA0100W	320G						100f	6 0	.05-.15Ø	6.0	Ø	10G		200m	Si	F27d
45	PA0700H,J-L,N	100G	120G	140G	160G	180G		10p	6 0	05 - 15Ø	6 0	Ø	10G		.20	Si	F9
46	PA0700P,Q,S-U	200G	220G	240G	260G	280G		100f	6.0	05- 15Ø	6 0	Ø	10G		200m	Si	F9
47	PA0700V,W	300G	320G					100f	6 0	.05- 15Ø	6 0	Ø	10G		200m	Si	F9
48	PG0110D	60G						100f	10	.05-.15Ø	10	6 0	10G		200m	Si	F27f
49	PG0110F	80G						100f	10	05- 15Ø	10	8 0	10G		200m	Si	F27f
50	PG0110H	100G						100f	10	.05- 15Ø	10	10	10G		200m	Si	F27f
51	PG0110J	120G						100f	10	.05- 15Ø	10	12	10G		200m	Si	F27f
52	PG0110K	140G						100f	10	.05- 15Ø	10	14	10G		200m	Si	F27f
53	PG0110L	160G						100f	10	05- 15Ø	10	16	10G		200m	Si	F27f
54	PG0110N	180G						100f	10	.05-.15Ø	10	18	10G		200m	Si	F27f
55	PG0110P	200G						100f	10	.05- 15Ø	10	20	10G		200m	Si	F27f
56	PG0110Q	220G						100f	10	.05-.15Ø	10	22	10G		200m	Si	F27f
57	PG0110S	240G						100f	10	.05-.15Ø	10	24	10G		200m	Si	F27f
58	PG0110T	260G						100f	10	.05- 15Ø	10	26	10G		200m	Si	F27f
59	SD11AL12							13p	0 0	.13 - .25	12			36		Si	P3
60	SD12AL12							13p	0 0	13 - .25	12			36		Si	F3a
61	SD22AL12							13p	0.0	13 - 25	12			36		Si	F11
62	SD32AL12							.13p	0.0	.13 - 25	12			36		Si	F21
63	SD42AL12							13p	0 0	.13 - 25	12			36		Si	F9a
64	SDGPAL12							13p	0 0	.13 - 25	12			36		Si	DO7
65	MA4688	100G						15p	0 0	10 - 20Ø	8.0			2.5		Si	P8
66	SD11AL18							.15p	0 0	15 - 30	18			36		Si	P3
67	SD12AL18							.15p	0.0	15 - 30	18			36		Si	F3a
68	SD22AL18							15p	0 0	15 - 30	18			36		Si	F11
69	SD32AL18							15p	0.0	.15 - 30	18			36		Si	F21
70	SD42AL18							15p	0.0	.15 - 30	18			36		Si	F9a
71	SDGPAL18							15p	0 0	15 - 30	18			36		Si	DO7
72	VAP81AN10	125G						150f	6 0	.10 - .20Ø	6.0					Si	F54
73	VAP81AN19	125G						150f	6.0	.10 - .20Ø	6.0					Si	F27t
74	VAP81AN20	125G						150f	6 0	.10 - .20Ø	6 0					Si	F27f
75	VAP81BN10	175G						150f	6.0	.10 - 20Ø	6 0					Si	F54
76	VAP81BN19	175G						150f	6.0	10 - .20Ø	6 0					Si	F27t
77	VAP81BN20	175G						150f	6 0	.10 - 20Ø	6.0					Si	F27f
78	VAP81CN10	225GØ						150f	6 0	.10 - 20Ø	5.5					Si$	F54
79	VAP81CN19	225GØ						150f	6 0	.10 - .20Ø	5 5					Si$	F27t
80	VAP81CN20	225GØ						150f	6 0	.10 - .20Ø	5 5					Si$	F27f
81	VAP81DN10	275GØ						150f	6 0	.10 - 20Ø	6 0					Si	F54
82	VAP81DN19	275GØ						150f	6 0	.10 - .20Ø	6.0					Si	F27t
83	VAP81DN20	275GØ						150f	6 0	.10 - 20Ø	6 0					Si	F27f
84	VAP81EN10	325GØ						150f	6 0	.10 - 20Ø	5 5					Si$	F54
85	VAP81EN19	325GØ						150f	6.0	10 - .20Ø	5 5					Si$	F27t
86	VAP81EN20	325GØ						150f	6 0	.10 - 20Ø	5 5					Si$	F27f
87	VAP81FN10	375GØ						150f	6.0	.10 - .20Ø	5.5					Si$	F54
88	VAP81FN19	375GØ						150f	6 0	.10 - 20Ø	5.5					Si$	F27t
89	VAP81FN20	375GØ						150f	6 0	10 - .20Ø	5.5					Si$	F27f
90	VAP81GN10	425GØ						150f	6 0	.10 - .20Ø	5.5					Si$	F54
91	VAP81GN19	425GØ						150f	6.0	10 - .20Ø	5 5					Si$	F27t
92	VAP81GN20	425GØ						150f	6.0	10 - .20Ø	5.5					Si$	F27f
93	VAP81HN10	475GØ						150f	6 0	10 - .20Ø	5.5					Si$	F54
94	VAP81HN19	475GØ						150f	6 0	10 - 20Ø	5.5					Si$	F27t
95	VAP81HN20	475GØ						150f	6 0	10 - 20Ø	5 5					Si$	F27f
96	VAP81IN10	500GØ						150f	6 0	.10 - .20Ø	5.5					Si$	F54
97	VAP81IN19	500GØ						150f	6 0	10 - .20Ø	5 5					Si$	F27t
98	VAP81IN20	500GØ						150f	6 0	10 - 20Ø	5.5					Si$	F27f

SYMBOLS AND CODES EXPLAINED IN INTERPRETER

10 VOLTAGE VARIABLE CAPACITORS & VARACTOR DIODES

IN ORDER OF (1) TYPICAL CAPACITANCE, (2) TEST VOLTAGE, and (3) TYPE No.

LINE No.	3 TYPE No	MINIMUM CUTOFF FREQUENCY (Corresponding to Type Numbers in previous column) (Hz)	(Hz)	(Hz)	(Hz)	(Hz)	(Hz)	TYP. CAP. 1 CAP. Cj (F)	2 at TEST VOLT (V)	CAPACITANCE RANGE (for V = 0 to PIV) Ø - at TEST VOLT (pF)	PIV (V)	Q FACTOR MIN. Q	at TEST FREQ (Hz)	MAX. SER. RES. Rs (Ω)	MAX. DISS. @ 25°C (W)	DESCRIPTION MAT.	DWG. No.
1	SD11AL24							17p	0.0	.17 - .35	24			72		Si	P3
2	SD12AL24							17p	0 0	.17 - 35	24			72		Si	F3a
3	SD22AL24							.17p	0.0	17 - 35	24			72		Si	F11
4	SD32AL24							17p	0.0	17 - 35	24			72		Si	F21
5	SD42AL24							17p	0.0	17 - 35	24			72		Si	F9a
6	SDGPAL24							17p	0.0	.17 - 35	24			72		Si	DO7
7	VAB807N10,N20	350						170fΔ	6.0	.15-.20Ø	6.0					Si	Z42
8#	CXY10	200G						200f	0.0	.10- 20	6 0		⌀ 30G		50m	GAΔ§	F56a
9	MS4111,12	460G	500G					200fΔ	0.0	.10- 30Ø	6.0 ⌀				15 ⌀	GAΔ§	F27d
10	MS4411,12	460G	500G					200fΔ	0.0	.10- 30Ø	6.0 ⌀				15 ⌀	GAΔ§	F54
11#	MV8152	150G						200fØ	0 0	20 - 40Ø	10 ⌀					GS$Δ	F27q
12#	MV8152A	150G						200fØ	0.0		6 0 ⌀				1.4	GA$	F27p
13	SD11AL6							20p	0.0	20 - .40	6 0			18		Si	P3
14	SD12AL6							20p	0.0	20 - 40	6.0			18		Si	F3a
15	SD22AL6							20p	0.0	.20 - 40	6.0			18		Si	F11
16	SD32AL6							20p	0 0	.20 - .40	6.0			18		Si	F21
17	SD42AL6							20p	0.0	20 - 40	6 0			18		Si	F9a
18	SDGPAL6							.20p	0 0	.20 - .40	6.0			18		Si	DO7
19	1S1581	100G						200f	6 0	.100-.300	6 0				200m	Si§§	F27ad
20	L8551	250						20pØ	6 0	15 - .30Ø	25 ⌀				1 2	SiΔ$	F27ac
21	PA0101H,J-L,N	100G	120G	140G	160G	180G		20p	6 0	15 - .25Ø	6.0		⌀ 10G		.20	Si	F27d
22	PA0101P,Q,S-U	200G	220G	240G	260G	280G		200f	6 0	15- 25Ø	6 0		⌀ 10G		200m	Si	F27d
23	PA0701H,J-L,N	100Ø	120G	140G	160G	180G		20p	6 0	15 - .25Ø	6 0		10G		.20	Si	F9
24	PA0701P,Q,S-U	200G	220G	240G	260G	280G		200f	6.0	15- 25Ø	6.0		⌀ 10G		200m	Si	F9
25▼#	S3014	450G						200f	6 0	.150-.250Ø	25 ⌀		⌀ 20G	2 0	500	GA	F54
26	SFD2-400E,F,G,H	80G	100G	150G	200G			200fØ	6.0		10				500m	Si$	F27d
27	SFD2-401E,F,G,H	80G	100G	150G	200G			200fØ	6 0		30				500m	Si$	F27d
28#	SFD2-401K	300G						20pØ	6 0		30				75		F27d
29	SFD2-402E,F,G,H	80G	100G	150G	200G			200fØ	6 0		60				500m	Si$	F27d
30#	SFD401G,H,K	150G	200G	300G				200fØ	6 0		30				750m	Si$	F49
31#	SFD402E,G,H	80G	150G	200G				200fØ	6 0		60				750m	Si$	F49
32	PG0111D	60G						200f	10	15- 25Ø	10	6 0	10G		200m	Si	F27f
33	PG0111F	80G						200f	10	.15- 25Ø	10	8 0	10G		200m	Si	F27f
34	PG0111H	100G						200f	10	15-.25Ø	10	10	10G		200m	Si	F27f
35	PG0111J	120G						200f	10	15-.25Ø	10	12	10G		200m	Si	F27f
36	PG0111K	140G						200f	10	15- 25Ø	10	14	10G		200m	Si	F27f
37	PG0111L	160G						200f	10	15-.25Ø	10	16	10G		200m	Si	F27f
38	PG0111N	180G						200f	10	15-.25Ø	10	18	10G		200m	Si	F27f
39	PG0111P	200G						200f	10	15- 25Ø	10	20	10G		200m	Si	F27f
40	MA4644A-E	240G	190G	150G	125G	80G		220f	6 0		6.0				15	GA	F27f
41	SD11AL48							23p	0 0	.23 - .45	48			36		Si	P3
42	SD12AL48							.23p	0 0	.23 - 45	48			36		Si	F3a
43	SD22AL48							.23p	0.0	23 - .45	48			36		Si	F11
44	SD32AL48							23p	0 0	23 - 45	48			36		Si	F21
45	SD42AL48							23p	0 0	.23 - .45	48			36		Si	F9a
46	SDGPAL48							.23p	0 0	.23 - 45	48			36		Si	DO7
47	SD11AL60							24p	0.0	24 - 48	60			36		Si	P3
48	SD12AL60							24p	0.0	24 - .48	60			36		Si	F3a
49	SD22AL60							24p	0 0	.24 - .48	60			36		Si	F11
50	SD32AL60							24p	0.0	24 - .48	60			36		Si	F21
51	SD42AL60							.24p	0.0	.24 - .48	60			36		Si	F9a
52	SDGPAL60							24p	0 0	.24 - 48	60			36		Si	DO7
53	MS4108,9,10	360G	400G	430G				250fΔ	0.0	10- 40Ø	6 0 ⌀				15 ⌀	GAΔ§	F27d
54	MS4408,9,10	360G	400G	430G				250fΔ	0 0	10- 40Ø	6 0 ⌀				.15 ⌀	GAΔ§	F54
55	SD11AL90							25p	0.0	.25 - 50	90			36		Si	P3
56	SD11AL100							25p	0 0	.25 - .50	100			36		Si	P3
57	SD11BL12							.25p	0.0	.25 - .50	12			18		Si	P3
58	SD12AL90							.25p	0.0	25 - 50	90			36		Si	F3a
59	SD12AL100							.25p	0.0	.25 - 50	100			36		Si	F3a
60	SD12BL12							25p	0.0	.25 - 50	12			18		Si	F3a
61	SD22AL90							25p	0 0	25 - 50	90			36		Si	F11
62	SD22AL100							25p	0 0	.25 - 50	100			36		Si	F11
63	SD22BL12							.25p	0.0	.25 - .50	12			18		Si	F11
64	SD32AL90							25p	0 0	.25 - .50	90			36		Si	F21
65	SD32AL100							.25p	0.0	.25 - .50	100			36		Si	F21
66	SD32BL12							.25p	0.0	.25 - .50	12			18		Si	F21
67	SD42AL90							.25p	0.0	25 - .50	90			36		Si	F9a
68	SD42AL100							25p	0 0	25 - .50	100			36		Si	F9a
69	SD42BL12							25p	0.0	25 - 50	12			18		Si	F9a
70	SDGPAL90							.25p	0.0	.25 - 50	90			36		Si	DO7
71	SDGPAL100							25p	0 0	25 - .50	100			36		Si	DO7
72	SDGPBL12							25p	0 0	25 - .50	12			18		Si	DO7
73	B006001D,E,F,G,H	40G	60G	80G	100G	140G		250f	6.0	.10-.40Ø	6.0				100m	Si	F27k
74	B015001D,E,F,G,H	40G	60G	80G	100G	140G		250f	6.0	.10- 40Ø	15				200m	Si	F27k
75	C006001D,E,F,G,H	40G	60G	80G	100G	140G		250f	6.0	10-.40Ø	6.0				700m	Si	F49
76	C015001D,E,F,G,H	40G	60G	80G	100G	140G		250f	6 0	.10-.40Ø	15				900m	Si	F49
77#	CXY12	300G						250f	6 0		10			1.3 ⌀	300m	GA	F56d
78	P006001D,E-H	40G	60G	80G	100G	140G		25p	6.0	10 - 40Ø	6.0				10	Si	F27ad
79	P015001D,E-H	40G	60G	80G	100G	140G		.25p	6 0	10 - .40Ø	15				.20	Si	F27ad
80	PH1200-1,2,3,4		5.0G	10G	15G	20G		.25p	6.0	.10 - .40Ø	6.0		⌀ 10G			Si	F58
81	PH1200A,B-F	30G	40G	50G	60G	70G	80G	250f	6 0	.10-.40Ø	6 0		⌀ 10G			Si	F58
82	PH1200G,H,J-L	90G	100G	120G	140G	160G		250f	6.0	10-.40Ø	6 0		⌀ 10G			Si	F58
83	PH1200N,P,Q	180G	200G	220G				250f	6 0	10- 40Ø	6.0		⌀ 10G			Si	F58
84	PH1210-1,2,3,4		5.0G	10G	15G	20G		25p	6.0	10 - 40Ø	15		⌀ 10G			Si	F58
85	PH1210A,B-F	30G	40G	50G	60G	70G	80G	250f	6.0	.10- 40Ø	15		⌀ 10G			Si	F58
86	PH1210G,H,J-L	90G	100G	120G	140G	160G		250f	6.0	10- 40Ø	15		⌀ 10G			Si	F58
87	PH1210N,P,Q	180G	200G	220G				250f	6 0	.10-.40Ø	15		⌀ 10G			Si	F58
88	PH1220-1,2,3,4		5 0G	10G	15G	20G		.25p	6.0	.10 - 40Ø	24		⌀ 10G			Si	F58
89	PH1220A,B-F	30G	40G	50G	60G	70G	80G	250f	6.0	10- 40Ø	24		⌀ 10G			Si	F58
90	PH1220G,H,J-L	90G	100G	120G	140G	160G		250f	6.0	10-.40Ø	24		⌀ 10G			Si	F58
91	PH1220N,P	180G	200G					250f	6 0	10-.40Ø	24		⌀ 10G			Si	F58
92	PH1230-1,2,3,4		5 0G	10G	15G	20G		.25p	6 0	.10 - .40Ø	30		⌀ 10G			Si	F58
93	PH1230A,B-F	30G	40G	50G	60G	70G	80G	250f	6 0	10-.40Ø	30		⌀ 10G			Si	F58
94	PH1230G,H,J-L	90G	100G	120G	140G	160G		250f	6 0	10- 40Ø	30		⌀ 10G			Si	F58
95	PH1240-1,2,3,4		5.0G	10G	15G	20G		.25p	6.0	.10 - 40Ø	45		⌀ 10G			Si	F58
96	PH1240A,B-F	30G	40G	50G	60G	70G	80G	250f	6.0	.10- 40Ø	45		⌀ 10G			Si	F58
97	PH1240G,H,J,K	90G	100G	120G	140G			250f	6.0	10-.40Ø	45		⌀ 10G			Si	F58
98	PH1250-1,2,3,4		5.0G	10G	15G	20G		.25p	6.0	10 - 40Ø	60		⌀ 10G			Si	F58
99	PH1250A,B-F	30G	40G	50G	60G	70G	80G	250f	6 0	.10-.40Ø	60		⌀ 10G			Si	F58
100	PH1250G,H,J	90G	100G	120G				250f	6 0	.10-.40Ø	60		⌀ 10G			Si	F58
101	PH1260-1,2,3,4		5.0G	10G	15G	20G		.25p	6 0	10 - 40Ø	90		⌀ 10G			Si	F58
102	PH1260A,B-F	30G	40G	50G	60G	70G	80G	250f	6.0	.10- 40Ø	90		⌀ 10G			Si	F58
103	PH1260G,H	90G	100G					250f	6.0	.10- 40Ø	90		⌀ 10G			Si	F58
104	PH1270-1,2,3,4		5 0G	10G	15G	20G		.25p	6.0	10 - .40Ø	120		⌀ 10G			Si	F58
105	PH1270A,B-F	30G	40G	50G	60G	70G	80G	250f	6.0	10- 40Ø	120		⌀ 10G			Si	F58
106	PH1270G	90G						250f	6.0	.10-.40Ø	120		⌀ 10G			Si	F58
107	PH1280-1,2,3,4		5.0G	10G	15G	20G		.25p	6.0	10 - .40Ø	150		⌀ 10G			Si	F58
108	PH1280A,B-E	30G	40G	50G	60G	70G		250f	6.0	10- 40Ø	150		⌀ 10G			Si	F58
109	PH1290-1,2,3,4		5.0G	10G	15G	20G		.25p	6.0	10 - 40Ø	200		⌀ 10G			Si	F58
110	PH1290A,B	30G	40G					250f	6.0	10- 40Ø	200		⌀ 10G			Si	F58

SYMBOLS AND CODES EXPLAINED IN INTERPRETER

10 VOLTAGE VARIABLE CAPACITORS & VARACTOR DIODES

IN ORDER OF (1) TYPICAL CAPACITANCE, (2) TEST VOLTAGE, and (3) TYPE No.

LINE No	3 TYPE No	MINIMUM CUTOFF FREQUENCY (Corresponding to Type Numbers in previous column) (Hz)	(Hz)	(Hz)	(Hz)	(Hz)	(Hz)	TYP. CAP. 1 CAP. Cj (F)	2 at TEST VOLT (V)	CAPACITANCE RANGE (for V = 0 to PIV) Ø - at TEST VOLT. (pF)	PIV (V)	Q FACTOR MIN. Q	at TEST FREQ (Hz)	MAX. SER. RES. Rs (Ω)	MAX. DISS. @ 25°C (W)	DESCRIPTION MAT	DWG. No.
1	PL0100-1,2,3,4		5 0G	10G	15G	20G		25p	6.0	10 - 40Ø	6.0	☑	10G			Si	F27d
2	PL0100A,B-F	30G	40G	50G	60G	70G	80G	250f	6 0	10-40Ø	6 0	☑	10G			Si	F27d
3	PL0100G,H,J-L	90G	100G	120G	140G	160G		250f	6 0	10-40Ø	6.0	☑	10G			Si	F27d
4	PL0100N,P,Q	180G	200G	220G				250f	6 0	10-40Ø	6 0	☑	10G			Si	F27d
5	PL0110-1,2,3,4		5 0G	10G	15G	20G		25p	6 0	10 - 40Ø	15	☑	10G			Si	F27d
6	PL0110A,B-F	30G	40G	50G	60G	70G	80G	250f	6.0	10-40Ø	15	☑	10G			Si	F27d
7	PL0110G,H,J-L	90G	100G	120G	140G	160G		250f	6 0	10-40Ø	15	☑	10G			Si	F27d
8	PL0110N,P,Q	180G	200G	220G				250f	6 0	10-40Ø	15	☑	10G			Si	F27d
9	PL0120-1,2,3,4		5 0G	10G	15G	20G		25p	6 0	10 - .40Ø	24	☑	10G			Si	F27d
10	PL0120A,B-F	30G	40G	50G	60G	70G	80G	250f	6 0	10-40Ø	24	☑	10G			Si	F27d
11	PL0120G,H,J-L	90G	100G	120G	140G	160G		250f	6 0	10-40Ø	24	☑	10G			Si	F27d
12	PL0120N,P	180G	200G					250f	6.0	10-40Ø	24	☑	10G			Si	F27d
13	PL0130-1,2,3,4		5 0G	10G	15G	20G		25p	6 0	10 - .40Ø	30	☑	10G			Si	F27d
14	PL0130A,B-F	30G	40G	50G	60G	70G	80G	250f	6 0	10-40Ø	30	☑	10G			Si	F27d
15	PL0130G,H,J-L	90G	100G	120G	140G	160G		250f	6 0	10-40Ø	30	☑	10G			Si	F27d
16	PL0140-1,2,3,4		5 0G	10G	15G	20G		25p	6 0	10 - .40Ø	45	☑	10G			Si	F27d
17	PL0140A,B-F	30G	40G	50G	60G	70G	80G	250f	6 0	10-40Ø	45	☑	10G			Si	F27d
18	PL0140G,H,J,K	90G	100G	120G	140G			250f	6 0	10-40Ø	45	☑	10G			Si	F27d
19	PL0150-1,2,3,4		5.0G	10G	15G	20G		25p	6 0	10 - .40Ø	60	☑	10G			Si	F27d
20	PL0150A,B-F	30G	40G	50G	60G	70G	80G	250f	6 0	10-40Ø	60	☑	10G			Si	F27d
21	PL0150G,H,J	90G	100G	120G				250f	6 0	.10-40Ø	60	☑	10G			Si	F27d
22	PL0160-1,2,3,4		5.0G	10G	15G	20G		25p	6.0	10 - .40Ø	90	☑	10G		30	Si	F27d
23	PL0160A,B-F	30G	40G	50G	60G	70G	80G	250f	6 0	10-40Ø	90	☑	10G		300m	Si	F27d
24	PL0160G,H	90G	100G					250f	6 0	10-40Ø	90	☑	10G		300m	Si	F27d
25	PL0170-1,2,3,4		5 0G	10G	15G	20G		25p	6.0	10 - 40Ø	120	☑	10G		35	Si	F27d
26	PL0170A,B-F	30G	40G	50G	60G	70G	80G	250f	6 0	10-40Ø	120	☑	10G		350m	Si	F27d
27	PL0170G	90G						250f	6.0	10-40Ø	120	☑	10G		350m	Si	F27d
28	PL0180-1,2,3,4		5.0G	10G	15G	20G		25p	6 0	10 - 40Ø	150	☑	10G		35	Si	F27d
29	PL0180A,B-E	30G	40G	50G	60G	70G		250f	6 0	.10-40Ø	150	☑	10G		350m	Si	F27d
30	PL0500-1,2,3,4		5 0G	10G	15G	20G		25p	6.0	.10 - 40Ø	6 0	☑	10G			Si	F10p
31	PL0500A,B-F	30G	40G	50G	60G	70G	80G	250f	6 0	10-40Ø	6 0	☑	10G		350m	Si	F10p
32	PL0500G,H,J-L	90G	100G	120G	140G	160G		250f	6 0	10-40Ø	6 0	☑	10G		350m	Si	F10p
33	PL0500N,P,Q	180G	200G	220G				250f	6 0	10-40Ø	6 0	☑	10G		350m	Si	F10p
34	PL0510-1,2,3,4		5 0G	10G	15G	20G		25p	6 0	10 - 40Ø	15	☑	10G			Si	F10p
35	PL0510A,B-F	30G	40G	50G	60G	70G	80G	250f	6 0	10-40Ø	15	☑	10G		350m	Si	F10p
36	PL0510G,H,J-L	90G	100G	120G	140G	160G		250f	6 0	10-40Ø	15	☑	10G		350m	Si	F10p
37	PL0510N,P,Q	180G	200G	220G				250f	6 0	10-40Ø	15	☑	10G		350m	Si	F10p
38	PL0530-1,2,3,4		5 0G	10G	15G	20G		25p	6 0	10 - 40Ø	30	☑	10G			Si	F10p
39	PL0530A,B-F	30G	40G	50G	60G	70G	80G	250f	6 0	10-40Ø	30	☑	10G		350m	Si	F10p
40	PL0530G,H,J-L	90G	100G	120G	140G	160G		250f	6 0	10-40Ø	30	☑	10G		350m	Si	F10p
41	PL0540-1,2,3,4		5 0G	10G	15G	20G		25p	6 0	10 - .40Ø	45	☑	10G			Si	F10p
42	PL0540A,B-F	30G	40G	50G	60G	70G	80G	250f	6 0	10-40Ø	45	☑	10G		350m	Si	F10p
43	PL0540G,H,J,K	90G	100G	120G	140G			250f	6 0	10-40Ø	45	☑	10G		350m	Si	F10p
44	PL0550-1,2,3,4		5 0G	10G	15G	20G		25p	6 0	10 - .40Ø	60	☑	10G			Si	F10p
45	PL0550A,B-F	30G	40G	50G	60G	70G	80G	250f	6 0	.10-40Ø	60	☑	10G		350m	Si	F10p
46	PL0550G,H,J	90G	100G	120G				250f	6 0	10-40Ø	60	☑	10G		350m	Si	F10p
47	PL0560-1,2,3,4		5 0G	10G	15G	20G		25p	6 0	10 - 40Ø	90	☑	10G			Si	F10p
48	PL0560A,B-F	30G	40G	50G	60G	70G	80G	250f	6 0	10-40Ø	90	☑	10G		350m	Si	F10p
49	PL0560G,H	90G	100G					250f	6 0	10-40Ø	90	☑	10G		350m	Si	F10p
50	PL0570-1,2,3,4		5 0G	10G	15G	20G		25p	6.0	10 - 40Ø	120	☑	10G			Si	F10p
51	PL0570A,B-F	30G	40G	50G	60G	70G	80G	250f	6 0	10-40Ø	120	☑	10G		350m	Si	F10p
52	PL0570G	90G						250f	6 0	10-40Ø	120	☑	10G		350m	Si	F10p
53	PL0580-1,2,3,4		5 0G	10G	15G	20G		25p	6 0	10 - 40Ø	150	☑	10G			Si	F10p
54	PL0580A,B-E	30G	40G	50G	60G	70G		250f	6.0	10-40Ø	150	☑	10G		350m	Si	F10p
55	PL0590-1,2,3,4		5 0G	10G	15G	20G		25p	6.0	10 - 40Ø	200	☑	10G			Si	F10p
56	PL0590A,B	30G	40G					250f	6 0	10-.40Ø	200	☑	10G		350m	Si	F10p
57	VAP82AN10	125G						250f	6.0	20 - 30Ø	6 0					Si	F54
58	VAP82AN19	125G						250f	6.0	20 - .30Ø	6 0					Si	F27t
59	VAP82AN20	125G						250f	6 0	20 - 30Ø	6 0					Si	F27f
60	VAP82BN10	175G						250f	6 0	20 - .30Ø	6 0					Si	F54
61	VAP82BN19	175G						250f	6 0	20 - 30Ø	6 0					Si	F27t
62	VAP82BN20	175G						250f	6 0	20 - 30Ø	6 0					Si	F27f
63	VAP82CN10	225G						250f	6.0	20 - 30Ø	6 0					Si	F54
64	VAP82CN19	225G						250f	6 0	20 - 30Ø	6.0					Si	F27t
65	VAP82CN20	225G						250f	6 0	20 - .30Ø	6.0					Si	F27f
66	VAP82DN10	275GØ						250f	6.0	20 - 30Ø	5 5					Si$	F54
67	VAP82DN19	275GØ						250f	6 0	20 - 30Ø	5.5					Si$	F27t
68	VAP82DN20	275GØ						250f	6 0	20 - .30Ø	5.5					Si$	F27f
69	VAP82EN10	325GØ						250f	6 0	.20 - 30Ø	5 5					Si$	F54
70	VAP82EN19	325GØ						250f	6 0	20 - .30Ø	5 5					Si$	F27t
71	VAP82EN20	325GØ						250f	6 0	20 - .30Ø	5 5					Si$	F27f
72#	ZC30Δ	175G						280f	0.0	55-1.1†	6.0				60m	Si	Z60
73	GC5411	350G						300f	0.0	.25-.40	6 0				300m	GA	F54c
74	GC5421	350G						300f	0.0	.25-.40	12				300m	GA	F54c
75	GC5431	350G						300f	0.0	.25-.40	24				300m	GA	F54c
76	GC5441	350G						300f	0 0	25-40	30				300m	GA	F54c
77	MA4687	100G						30p	0.0	20 - .40Ø	8.0			1 8		Si	F27d
78	MS4107	320G						300fØ	0 0	10-50Ø	6 0 ☑				15 ☑	GAΔ§	F27d
79	MS4407	320G						300fØ	0.0	10-50Ø	6.0 ☑				15 ☑	GAΔ§	F54
80#	MV8153D	150G						300fØ	0 0		30 ☑				1 4	GA$	F27p
81#	MV8203C	200G						300fØ	0 0		18 ☑				1 4	GA$	F27p
82#	MV8203D	200G						300fØ	0 0		30 ☑				1.4	GA$	F27p
83#	MV8253A	250G						300fØ	0 0		6 0 ☑				1 4	GA$	F27p
84#	MV8253C	250G						300fØ	0.0		18 ☑				1 4	GA$	F27p
85#	MV8253D	250G						300fØ	0.0		30 ☑				1 4	GA$	F27p
86#	MV8303A	300G						300fØ	0 0		6 0 ☑				1 4	GA$	F27p
87#	MV8303C	300G						300fØ	0 0		18 ☑				1 4	GA$	F27p
88#	MV8303D	300G						300fØ	0 0		30 ☑				1 4	GA$	F27p
89	SD11-5,6,7	50G	60G	70G				30p	0 0	.30 - 2 0	6.0	☑	10G		20	Si	P3
90	SD11AL120							30p	0.0	.30 - .60	120			36		Si	P3
91	SD11BL18							30p	0 0	.30 - .60	18			18		Si	P3
92	SD12-5,6,7	50G	60G	70G				30p	0.0	.30 - 2 0	6 0	☑	10G		.20	Si	F3a
93	SD12AL120							30p	0 0	.30 - 60	120			36		Si	F3a
94	SD12BL18							.30p	0 0	30 - .60	18			18		Si	F3a
95	SD22-5,6,7	50G	60G	70G				30p	0 0	.30 - 2.0	6 0	☑	10G		20	Si	F11
96	SD22AL120							30p	0.0	.30 - .60	120			36		Si	F11
97	SD22BL18							30p	0.0	30 - 60	18			18		Si	F11
98	SD32-5,6,7	50G	60G	70G				30p	0.0	.30 - 2.0	6 0	☑	10G		.20	Si	F21
99	SD32AL120							30p	0 0	30 - .60	120			36		Si	F21
100	SD32BL18							.30p	0 0	.30 - .60	18			18		Si	F21
101	SD42-5,6,7	50G	60G	70G				30p	0 0	30 - 2 0	6 0	☑	10G		20	Si	F9a
102	SD42AL120							30p	0 0	30 - 60	120			36		Si	F9a
103	SD42BL18							.30p	0.0	.30 - .60	18			18		Si	F9a
104	SDGPAL120							30p	0.0	30 - .60	120			36		Si	DO7
105	SDGPBL18							.30p	0.0	.30 - 60	18			18		Si	DO7
106#	4041-11-00,01,02		120G					.30p	6 0	20 - 40Ø	60				4 0	Si	Z53
107#	DC4021A00,01,02		10G					300f	6.0	20-.40Ø	24				4 0	Si	Z53
108#	DC4021B00,01,02		10G					300f	6.0	20-40Ø	24				4 0	Si	Z53
109#	DC4021C00,01,02		20G					300f	6.0	20-40Ø	24				4 0	Si	Z53
110#	DC4021D00,01,02		30G					300f	6.0	.20-.40Ø	24				4 0	Si	Z53

SYMBOLS AND CODES EXPLAINED IN INTERPRETER

10 VOLTAGE VARIABLE CAPACITORS & VARACTOR DIODES

IN ORDER OF (1) TYPICAL CAPACITANCE, (2) TEST VOLTAGE, and (3) TYPE No.

LINE No.	3 TYPE No.	MINIMUM CUTOFF FREQUENCY (Corresponding to Type Numbers in previous column) (Hz)	(Hz)	(Hz)	(Hz)	(Hz)	(Hz)	TYP. CAP. 1 CAP. Cj (F)	2 at TEST VOLT (V)	CAPACITANCE RANGE (for V = 0 to PIV) Ø - at TEST VOLT. (pF)	PIV (V)	Q FACTOR MIN. Q	at TEST FREQ (Hz)	MAX. SER RES. Rs (Ω)	MAX. DISS @ 25°C (W)	DESCRIPTION MAT.	DWG. No.
1#	DC4021E00,01,02		40G					300f	6.0	.20-.40Ø	24				4.0	Si	Z53
2#	DC4021F00,01,02		50G					300f	6.0	20- 40Ø	24				4 0	Si	Z53
3#	DC4021G00,01,02		60G					300f	6.0	.20-.40Ø	24				4.0	Si	Z53
4#	DC4021H00,01,02		70G					300f	6.0	.20- 40Ø	24				4.0	Si	Z53
5#	DC4021J00,01,02		80G					300f	6.0	.20-.40Ø	24				4 0	Si	Z53
6#	DC4021K00,01,02		90G					300f	6.0	.20-.40Ø	24				4.0	Si	Z53
7#	DC4021L00,01,02		100G					300f	6.0	20- 40Ø	24				4 0	Si	Z53
8#	DC4021M00,01,02		120G					300f	6.0	20-.40Ø	24				4 0	Si	Z53
9#	DC4021N00,01,02		140G					300f	6.0	.20-.40Ø	24				4 0	Si	Z53
10#	DC4021P00,01,02		160G					300f	6.0	.20-.40Ø	24				4.0	Si	Z53
11#	DC4031A00,01,02		10G					300f	6.0	.20-.40Ø	48				4 0	Si	Z53
12#	DC4031B00,01,02		10G					300f	6.0	20-.40Ø	48				4 0	Si	Z53
13#	DC4031C00,01,02		20G					300f	6.0	.20-.40Ø	48				4.0	Si	Z53
14#	DC4031D00,01,02		30G					300f	6.0	.20- 40Ø	48				4 0	Si	Z53
15#	DC4031E00,01,02		40G					300f	6.0	.20- 40Ø	48				4 0	Si	Z53
16#	DC4031F00,01,02		50G					300f	6.0	20- 40Ø	48				4.0	Si	Z53
17#	DC4031G00,01,02		60G					300f	6.0	.20-.40Ø	48				4 0	Si	Z53
18#	DC4031H00,01,02		70G					300f	6 0	.20-.40Ø	48				4 0	Si	Z53
19#	DC4031J00,01,02		80G					300f	6.0	20- 40Ø	48				4 0	Si	Z53
20#	DC4031K00,01,02		90G					300f	6 0	20- 40Ø	48				4 0	Si	Z53
21#	DC4031L00,01,02		100G					300f	6.0	20- 40Ø	48				4 0	Si	Z53
22#	DC4031M00,01,02		120G					300f	6 0	.20- 40Ø	48				4 0	Si	Z53
23#	DC4041A00,01,02		10G					300f	6 0	20- 40Ø	60				4 0	Si	Z53
24#	DC4041B00,01,02		10G					300f	6 0	.20- 40Ø	60				4.0	Si	Z53
25#	DC4041C00,01,02		20G					300f	6 0	20- 40Ø	60				4.0	Si	Z53
26#	DC4041D00,01,02		30G					300f	6.0	20- 40Ø	60				4.0	Si	Z53
27#	DC4041E00,01,02		40G					300f	6 0	.20-.40Ø	60				4.0	Si	Z53
28#	DC4041F00,01,02		50G					300f	6 0	20-.40Ø	60				4 0	Si	Z53
29#	DC4041G00,01,02		60G					300f	6 0	20- 40Ø	60				4 0	Si	Z53
30#	DC4041H00,01,02		70G					300f	6 0	.20-.40Ø	60				4.0	Si	Z53
31#	DC4041J00,01,02		80G					300f	6.0	20- 40Ø	60				4 0	Si	Z53
32#	DC4041K00,01,02		90G					300f	6 0	20- 40Ø	60				4 0	Si	Z53
33#	DC4041L00,01,02		100G					300f	6 0	20-.40Ø	60				4 0	Si	Z53
34#	DC4051A00,01,02		10G					300f	6 0	20-.40Ø	90				4.0	Si	Z53
35#	DC4051B00,01,02		10G					300f	6 0	20- 40Ø	90				4 0	Si	Z53
36#	DC4051C00,01,02		20G					300f	6 0	.20-.40Ø	90				4 0	Si	Z53
37#	DC4051D00,01,02		30G					300f	6.0	20-.40Ø	90				4 0	Si	Z53
38#	DC4051E00,01,02		40G					300f	6 0	20-.40Ø	90				4.0	Si	Z53
39#	DC4051F00,01,02		50G					300f	6 0	.20- 40Ø	90				4.0	Si	Z53
40#	DC4051G00,01,02		60G					300f	6.0	.20-.40Ø	90				4 0	Si	Z53
41#	DC4051H00,01,02		70G					300f	6.0	.20- 40Ø	90				4 0	Si	Z53
42#	DC4051J00,01,02		80G					300f	6.0	.20- 40Ø	90				4 0	Si	Z53
43#	DC4051K00,01,02		90G					300f	6 0	.20-.40Ø	90				4 0	Si	Z53
44#	DC4051L00,01,02		100G					300f	6.0	20-.40Ø	90				4 0	Si	Z53
45#	DC4061A00,01,02		10G					300f	6.0	.20-.40Ø	120				4 0	Si	Z53
46#	DC4061B00,01,02		10G					300f	6 0	.20-.40Ø	120				4 0	Si	Z53
47#	DC4061C00,01,02		20G					300f	6 0	.20-.40Ø	120				4 0	Si	Z53
48#	DC4061D00,01,02		30G					300f	6.0	20-.40Ø	120				4 0	Si	Z53
49#	DC4061E00,01,02		40G					300f	6.0	20- 40Ø	120				4 0	Si	Z53
50#	DC4061F00,01,02		50G					300f	6 0	.20-.40Ø	120				4 0	Si	Z53
51#	DC4061G00,01,02		60G					300f	6.0	20-.40Ø	120				4 0	Si	Z53
52#	DC4061H00,01,02		70G					300f	6 0	.20-.40Ø	120				4 0	Si	Z53
53#	DC4061J00,01,02		80G					300f	6.0	20- 40Ø	120				4 0	Si	Z53
54#	DC4121A01,02	10G						300f	6.0	20- 40	24				4 0	Si	Z53
55#	DC4121B01,02	10G						300f	6 0	.20-.40	24				4.0	Si	Z53
56#	DC4121C01,02	20G						300f	6 0	20-.40	24				4.0	Si	Z53
57#	DC4121D01,02	30G						300f	6 0	.20- 40	24				4 0	Si	Z53
58#	DC4121E01,02	40G						300f	6 0	.20- 40	24				4 0	Si	Z53
59#	DC4121F01,02	50G						300f	6.0	20-.40	24				4.0	Si	Z53
60#	DC4121G01,02	60G						300f	6 0	20-.40	24				4.0	Si	Z53
61#	DC4121H01,02	70G						300f	6.0	.20- 40	24				4 0	Si	Z53
62#	DC4121J01,02	80G						300f	6 0	20- 40	24				4 0	Si	Z53
63#	DC4121K01,02	90G						300f	6.0	20-.40	24				4 0	Si	Z53
64#	DC4121L01,02	100G						300f	6.0	20- 40	24				4 0	Si	Z53
65#	DC4121M01,02	120G						300f	6 0	.20-.40	24				4.0	Si	Z53
66#	DC4121N01,02	140G						300f	6.0	20- 40	24				4 0	Si	Z53
67#	DC4121P01,02	160G						300f	6.0	20- 40	24				4 0	Si	Z53
68#	DC4131A01,02	10G						300f	6.0	20- 40	48				4 0	Si	Z53
69#	DC4131B01,02	10G						300f	6.0	.20-.40	48				4.0	Si	Z53
70#	DC4131C01,02	20G						300f	6.0	.20- 40	48				4 0	Si	Z53
71#	DC4131D01,02	30G						300f	6.0	20- 40	48				4 0	Si	Z53
72#	DC4131E01,02	40G						300f	6 0	20- 40	48				4.0	Si	Z53
73#	DC4131F01,02	50G						300f	6 0	.20- 40	48				4.0	Si	Z53
74#	DC4131G01,02	60G						300f	6.0	20-.40	48				4 0	Si	Z53
75#	DC4131H01,02	70G						300f	6 0	.20- 40	48				4.0	Si	Z53
76#	DC4131J01,02	80G						300f	6 0	20- 40	48				4.0	Si	Z53
77#	DC4131K01,02	90G						300f	6 0	20-.40	48				4 0	Si	Z53
78#	DC4131L01,02	100G						300f	6 0	20-.40	48				4 0	Si	Z53
79#	DC4131M01,02	120G						300f	6 0	.20-.40	48				4 0	Si	Z53
80#	DC4141A01,02	10G						300f	6 0	.20-.40	60				4 0	Si	Z53
81#	DC4141B01,02	10G						300f	6 0	20- 40	60				4 0	Si	Z53
82#	DC4141C01,02	20G						300f	6 0	20-.40	60				4 0	Si	Z53
83#	DC4141D01,02	30G						300f	6 0	20-.40	60				4 0	Si	Z53
84#	DC4141E01,02	40G						300f	6 0	.20- 40	60				4 0	Si	Z53
85#	DC4141F01,02	50G						300f	6.0	20-.40	60				4 0	Si	Z53
86#	DC4141G01,02	60G						300f	6.0	.20- 40	60				4 0	Si	Z53
87#	DC4141H01,02	70G						300f	6 0	.20-.40	60				4 0	Si	Z53
88#	DC4141J01,02	80G						300f	6 0	.20-.40	60				4 0	Si	Z53
89#	DC4141K01,02	90G						300f	6 0	.20- 40	60				4 0	Si	Z53
90#	DC4141L01,02	100G						300f	6 0	.20- 40	60				4 0	Si	Z53
91#	DC4141M01,02	120G						300f	6.0	.20-.40	60				4 0	Si	Z53
92#	DC4151A01,02	10G						300f	6 0	20-.40	90				4 0	Si	Z53
93#	DC4151B01,02	10G						300f	6 0	.20-.40	90				4 0	Si	Z53
94#	DC4151C01,02	20G						300f	6 0	.20-.40	90				4 0	Si	Z53
95#	DC4151D01,02	30G						300f	6 0	20-.40	90				4 0	Si	Z53
96#	DC4151E01,02	40G						300f	6 0	.20- 40	90				4 0	Si	Z53
97#	DC4151F01,02	50G						300f	6 0	20- 40	90				4 0	Si	Z53
98#	DC4151G01,02	60G						300f	6 0	.20- 40	90				4.0	Si	Z53
99#	DC4151H01,02	70G						300f	6 0	20- 40	90				4 0	Si	Z53
100#	DC4151J01,02	80G						300f	6 0	20- 40	90				4 0	Si	Z53
101#	DC4151K01,02	90G						300f	6 0	20- 40	90				4 0	Si	Z53
102#	DC4151L01,02	100G						300f	6.0	20- 40	90				4 0	Si	Z53
103#	DC4161A01,02	10G						300f	6 0	20- 40	120				4 0	Si	Z53
104#	DC4161B01,02	10G						300f	6 0	20- 40	120				4 0	Si	Z53
105#	DC4161C01,02	20G						300f	6.0	20- 40	120				4 0	Si	Z53
106#	DC4161D01,02	30G						300f	6.0	20- 40	120				4 0	Si	Z53
107#	DC4161E01,02	40G						300f	6.0	20- 40	120				4 0	Si	Z53
108#	DC4161F01,02	50G						300f	6 0	.20-.40	120				4 0	Si	Z53
109#	DC4161G01,02	60G						300f	6.0	20- 40	120				4 0	Si	Z53
110#	DC4161H01,02	70G						300f	6.0	20- 40	120				4 0	Si	Z53

SYMBOLS AND CODES EXPLAINED IN INTERPRETER

10 VOLTAGE VARIABLE CAPACITORS & VARACTOR DIODES

IN ORDER OF (1) TYPICAL CAPACITANCE, (2) TEST VOLTAGE, and (3) TYPE No.

LINE No.	3 TYPE No.	MINIMUM CUTOFF FREQUENCY (Corresponding to Type Numbers in previous column) (Hz)	(Hz)	(Hz)	(Hz)	(Hz)	(Hz)	TYP. CAP. 1 CAP. Cj (F)	2 at TEST VOLT (V)	CAPACITANCE RANGE (for V = 0 to PIV) Ø - at TEST VOLT. (pF)	PIV (V)	Q FACTOR MIN. Q	at TEST FREQ (Hz)	MAX. SER. RES. Rs (Ω)	MAX. DISS. @ 25°C (W)	DESCRIPTION MAT.	DWG. No.
1#	DC4161J01,02	80G						300f	6.0	.20-.40	120				4.0	Si	Z53
2	L8513	200						.30pØ	6.0	.25 - .50Ø	50 ☑				3.5	Si△$	F27ac
3	MA4086							.30p	6.0	.20 - .40Ø	8.0					Si	F27d
4	MA4280							.30p	6.0	.20 - .40	30			75	.30	Si	F3a
5	MA4341AA,1,2	40G	90G	140G				.30p	6.0	.20 - .40	6.0				15	Si	F3a
6	MA4380							30p	6.0	.20 - .40	30			75		Si$	A31e
7	MA4968E,F	250G						300fØ	6.0	.30-.70Ø	18 ☑				200m	Si	Z48
8	PA0102H,J,K,L	100G	120G	140G	160G			.30p	6.0	.25 - .35Ø	6.0	☑	10G		.20	Si	F27d
9	PA0102N,P,Q,S	180G	200G	220G	240G			300f	6.0	.25-.35Ø	6.0	☑	10G		200m	Si	F27d
10	PA0702H,J,K,L	100G	120G	140G	160G			.30p	6.0	.25 - .35Ø	6.0	☑	10G		.20	Si	F9
11	PA0702N,P,Q,S	180G	200G	220G	240G			300f	6.0	.25-.35Ø	6.0	☑	10G		200m	Si	F9
12	PG0112D	60G						300f	10	.25-.35Ø	10	6.0	10G		200m	Si	F27f
13	PG0112F	80G						300f	10	25-.35Ø	10	8.0	10G		200m	Si	F27f
14	PG0112H	100G						300f	10	.25-.35Ø	10	10	10G		200m	Si	F27f
15	PG0112J	120G						300f	10	.25-.35Ø	10	12	10G		200m	Si	F27f
16	PG0112K	140G						300f	10	25-.35Ø	10	14	10G		200m	Si	F27f
17#	BSC14	36G						30p	18	.20 - .40	18	3.6	10G	8.0	15	Si	F3a
18#	BSC26	37G						.30p	60	.20 - .40	60	3.7	10G	8.0	80	Si	F3a
19#	ZC200△	300G						350f		25-.50†	60				60m	Si	Z60
20	MS2006	250G						350f△	0.0	.10-.60Ø	60 ☑			150m☑		GA△§	F10b
21	MS4106	250G						350f△	0.0	10-.60Ø	6.0 ☑			.15 ☑		GA△§	F27d
22	MS4406	250G						350f△	0.0	10-.60Ø	60 ☑			.15 ☑		GA△§	F54
23	SD11BL24							.35p	0.0	35 - 70	24			36		Si$	P3
24	SD12BL24							.35p	0.0	.35 - 70	24			36		Si$	F3a
25	SD22BL24							35p	0.0	35 - 70	24			36		Si$	F11
26	SD32BL24							35p	0.0	35 - .70	24			36		Si$	F21
27	SD42BL24							35p	0.0	.35 - .70	24			36		Si$	F9a
28	SDGPBL24							.35p	0.0	.35 - .70	24			36		Si$	DO7
29#	ZC201	400G						370f	0.0	.25-.50†	6.0				60m	Si	Z60
30#	ZC202	500G						370f	0.0	.25-.50†	6.0				60m	Si	Z60
31	D5047F	450G						375f§		.300-.450	60 ☑				300m	GA§△	F27g
32	D5047G	500G						375f§		.300-.450	6.0 ☑				300m	GA§△	F27g
33	D5244F	450GØ						375f		.300-.450	10 ☑				300m	GA§△	F27g
34	D5244G	500GØ						375f		.300-.450	10 ☑				300m	GA§△	F27g
35	TIXV01	100G						380f†	0.0	35-1.0Ø	60				250m	GA△$	F10b
36#	CAY10	125G						40p	0.0	.20 - .40	60	14	8.9G		.05	GA	F27h
37	MA4039	120G						40p	0.0	30 - .50						Si	P8
38	MA4539	120G						40p	0.0	.30 - .50						Si	F21
39	SD11BL6							40p	0.0	.40 - .80	60			9.0		Si$	P3
40	SD12BL6							40p	0.0	.40 - 80	60			90		Si$	F3a
41	SD22BL6							.40p	0.0	.40 - 80	60			90		Si$	F11
42	SD32BL6							40p	0.0	40 - .80	6.0			90		Si$	F21
43	SD42BL6							40p	0.0	40 - 80	60			90		Si$	F9a
44	SDGPBL6							40p	0.0	.40 - .80	60			90		Si$	DO7
45	VAP101N10	300G						400f	0.0	40-.90Ø△	60				250m	Ga	F54
46	VAP101N19	300G						400f	0.0	.40-.90Ø△	6.0				250m	Ga	F27t
47	VAP101N20	300G						400f	0.0	40-.90Ø△	60				250m	Ga	F27f
48	VAP102N10	400G						400f	0.0	.50-.70Ø△	6.0				250m	Ga	F54
49	VAP102N19	400G						400f	0.0	.50-.70Ø△	60				250m	Ga	F27t
50	VAP102N20	400G						400f	0.0	50-.70Ø△	6.0				250m	Ga	F27f
51	VAP103N10	300G						400f	0.0	.30-.50Ø△	6.0				250m	Ga	F54
52	VAP103N19	300G						400f	0.0	30-.50Ø△	60				250m	Ga	F27t
53	VAP103N20	300G						400f	0.0	30-.50Ø△	60				250m	GA	F27f
54	VAP104N10	400G						400f	0.0	30-.50Ø△	60				250m	Ga	F54
55	VAP104N19	400G						400f	0.0	30-.50Ø△	60				250m	Ga	F27t
56	VAP104N20	400G						400f	0.0	30-.50Ø△	60				250m	Ga	F27f
57#	ZC29	200G						400f	0.0	.28-.55†	60				60m	Si	Z60
58	1N4941	200G						400f☑	60	.20-.40Ø	60 ☑	☑	10G	20	100m§	GA	F27d
59	L8552	200						40pØ	60	.30 - .50Ø	25 ☑				2.0	Si△$	F27ac
60	MA4969E,F	300G						400f☑	6.0	.20-.40Ø	10 ☑				50m	Si	Z48
61	VAB806N20	200						400f△	60	30-.50Ø	30					Si	F27f
62	VAP83AN10	125G						400f	60	30 - .50Ø	60					Si	F54
63	VAP83AN19	125G						400f	60	30 - .50Ø	6.0					Si	F27t
64	VAP83AN20	125G						400f	60	30 - 50Ø	6.0					Si	F27f
65	VAP83BN10	175GØ						400f	60	30 - 50	5.5					Si$	F54
66	VAP83BN19	175GØ						400f	6.0	.30 - .50	55					Si$	F27t
67	VAP83BN20	175GØ						400f	60	30 - .50	55					Si$	F27f
68	VAP83CN10	225GØ						400f	60	30 - .50	55					Si$	F54
69	VAP83CN19	225GØ						400f	60	30 - 50	55					Si$	F27t
70	VAP83CN20	225GØ						400f	60	30 - 50	55					Si$	F27f
71	PA0103H,J,K,L	100G	120G	140G	160G			42p	60	.35 - .50Ø	60	☑	10G		.20	Si	F27d
72	PA0703H,J,K,L	100G	120G	140G	160G			42p	60	.35 - .50Ø	60	☑	10G		20	Si	F9
73	PA0103N,P	180G	200G					425f	60	.35-.50Ø	60	☑	10G		200m	Si	F27d
74	PA0703N,P	180G	200G					425f	60	35-.50Ø	60	☑	10G		200m	Si	F9
75	D5047E	400G						450f§		300-.600	6.0 ☑				300m	GA§△	F27g
76	D5147F	450G						450f§☑		.300-.450	60 ☑				200m	GA§△	F54c
77	D5147G	500G						450f§☑		300-.450	60 ☑				200m	GA§△	F54c
78	D5244A-D	200GØ	250G	300G	350G			450f		300-.600	10 ☑				300m	GA§△	F27g
79	D5244E	400GØ						450f		.300-.600	10 ☑				300m	GA§△	F27g
80	D5245A-D	200GØ	250G	300G	350G			450f		300-.600	20 ☑				300m	GA§△	F27g
81	D5245E	400GØ						450f		300-.600	20 ☑				300m	GA§△	F27g
82	D5246A,B,C	200GØ	250G	300G				450f		300-.600	30 ☑				300m	GA§△	F27g
83	D5246D	350GØ						450f		300-.600	30 ☑				300m	GA§△	F27g
84	D5246E	400GØ						450f		300-.600	30 ☑				300m	GA§△	F27g
85	D5046B	250G						45p	0.0	.30 - 60Ø	5.5					Si	
86	D5146,A,B	75G	100G	125G				45p	0.0	.30 - 60Ø	55 ☑				30	Si△§	F54
87	D5371D	175G						45p	0.0	.30 - .60Ø	55 ☑				.20	Si§△	F27j
88	MA4686	90G						45p	0.0	.30 - 60Ø	80			14		Si	F27d
89	MS266	200G						450f△	0.0	20-70Ø	60 ☑				.15 ☑	GA△§	F10b
90	MS4105	200G						450f△	0.0	20-70Ø	60 ☑				15 ☑	GA△§	F27d
91	MS4405	200G						450f△	0.0	20-70Ø	6.0 ☑				15 ☑	GA△§	F54
92	SD11BL48							45p	0.0	45 - 90	48			18		Si$	P3
93	SD12BL48							45p	0.0	45 - .90	48			18		Si$	F3a
94	SD22BL48							45p	0.0	45 - .90	48			18		Si$	F11
95	SD32BL48							45p	0.0	45 - 90	48			18		Si$	F21
96	SD42BL48							.45p	0.0	45 - 90	48			18		Si$	F9a
97	SDGPBL48							45p	0.0	45 - 90	48			18		Si$	DO7
98#	SV213C	150G						45p	0.0	.30 - 60Ø	60					GA$♦	F27a
99#	SV543C,D	200G	250G					450f	0.0	.30-.60Ø	30					GA$§	F27a
100#	1S1561	55G						450f	60	300-.600Ø	60				1.5	Si$#	F49d
101#	1S1571	55G						450f	60	300-.600Ø	60				500m	Si$#	F27ad
102▼	GC3308	200G						450f	60	300f-600fØ	55				57	Si	F78a
103	MA4645B-E	190G	150G	105G	80G			450f	60		60				30	GA	F27f
104	D5245F	450GØ						475f		.300-450	20 ☑				300m	GA§△	F27g
105	D5255A,B,C	200GØ	250G	300G				475f		600-10	20 ☑				400m	GA§△	F27g
106	D5256A,B	200GØ	250G					475f		600-10	30 ☑				400m	GA§△	F27g
107	SD11BL60							48p	0.0	48 - 96	60			18		Si$	P3
108	SD12BL60							48p	0.0	48 - .96	60			18		Si$	F3a
109	SD22BL60							48p	0.0	48 - 96	60			18		Si$	F11
110	SD32BL60							48p	0.0	48 - 96	60			18		Si$	F21

SYMBOLS AND CODES EXPLAINED IN INTERPRETER

10 VOLTAGE VARIABLE CAPACITORS & VARACTOR DIODES

IN ORDER OF (1) TYPICAL CAPACITANCE, (2) TEST VOLTAGE, and (3) TYPE No.

LINE No.	TYPE No. [3]	MINIMUM CUTOFF FREQUENCY (Corresponding to Type Numbers in previous column) (Hz)	(Hz)	(Hz)	(Hz)	(Hz)	(Hz)	TYP. CAP. 1 CAP. Cj (F)	2 at TEST VOLT (V)	CAPACITANCE RANGE (for V = 0 to PIV) Ø - at TEST VOLT. (pF)	PIV (V)	Q FACTOR MIN. Q	at TEST FREQ (Hz)	MAX. SER. RES. Rs (Ω)	MAX. DISS. @ 25°C (W)	DESCRIPTION MAT.	DWG. No
1	SD42BL60							48p	0 0	.48 - 96	60			18		Si§	F9a
2	SDGPBL60							48p	0 0	48 - 96	60			18		Si§	DO7
3	TIXV03	200G						480f†	0 0	.35-60Ø	6 0				250m	GA△$	F10b
4	TIXV04	300G						480f†	0 0	.35-60Ø	6 0				250m	GA△$	F10b
5	D5047D	350G						500f§		300-700	6 0 ☑				300m	GA§△	F27g
6	D5046A	200G						50p	0 0	30 - 70Ø	5.5 ☑				.30	Si△$	F27g
7	D5371C	150G						50p	0.0	30 - 70Ø	5 5 ☑				20	Si§△	F27j
8	GC5412	300G						500f	0.0	40-60	6.0				400m	GA	F54c
9	GC5422	300G						500f	0 0	40-60	12				400m	GA	F54c
10	GC5432	300G						500f	0 0	40-60	24				400m	GA	F54c
11	MA4037	80G						50p	0 0	40 - 60						Si	P8
12	MA4038	100G						50p	0.0	.40 - .60						Si	P8
13	MS265	160G						500f△	0 0	20-80Ø	6 0 ☑				15 ☑	GA△§	F10b
14	MS4104	160G						500f△	0 0	20-80Ø	6 0 ☑				15 ☑	GA△§	F27d
15	MS4404	160G						500f△	0.0	20-80Ø	6 0 ☑				.15 ☑	GA△§	F54
16	SD11-3	30G						50p	0 0	.50 - 3.5	6 0	☑	10G		.30	Si	P3
17	SD11-4	40G						50p	0 0	.50 - 3.0	6 0	☑	10G		.30	Si	P3
18	SD11A90							.50p	0 0	.50 - 1.0	90			18		Si$	P3
19	SD11A100							50p	0 0	50 - 1.0	100			18		Si$	P3
20	SD11CL12							50p	0 0	50 - 1.0	12			9.0		Si$	P3
21	SD12-3	30G						50p	0.0	.50 - 3.5	6.0	☑	10G		.30	Si	F3a
22	SD12-4	40G						50p	0.0	50 - 3.0	6 0	☑	10G		30	Si	F3a
23	SD12A90							50p	0.0	50 - 1.0	90			18		Si$	F3a
24	SD12A100							.50p	0.0	.50 - 1.0	100			18		Si$	F3a
25	SD12CL12							50p	0.0	50 - 1.0	12			9 0		Si$	F3a
26	SD22-3	30G						50p	0.0	50 - 3.5	6.0	☑	10G		.30	Si	F11
27	SD22-4	40G						50p	0.0	50 - 3.0	6.0	☑	10G		30	Si	F11
28	SD22A90							50p	0.0	50 - 1.0	90			18		Si$	F11
29	SD22A100							50p	0 0	50 - 1.0	100			18		Si$	F11
30	SD22CL12							50p	0.0	50 - 1.0	12			9.0		Si$	F11
31	SD32-3	30G						50p	0 0	50 - 3 5	6.0	☑	10G		.30	Si	F21
32	SD32-4	40G						50p	0.0	50 - 3.0	6 0	☑	10G		30	Si	F21
33	SD32A90							50p	0.0	.50 - 1.0	90			18		Si$	F21
34	SD32A100							50p	0.0	50 - 1 0	100			18		Si$	F21
35	SD32CL12							50p	0.0	50 - 1.0	12			9.0		Si$	F21
36	SD42-3	30G						.50p	0 0	50 - 3 5	6 0	☑	10G		.30	Si	F9a
37	SD42-4	40G						50p	0 0	50 - 3.0	6 0	☑	10G		.30	Si	F9a
38	SD42A90							50p	0 0	50 - 1.0	90			18		Si$	F9a
39	SD42A100							.50p	0 0	.50 - 1.0	100			18		Si$	F9a
40	SD42CL12							50p	0.0	50 - 1.0	12			9 0		Si$	F9a
41	SDGPA90							50p	0 0	50 - 1.0	90			18		Si$	DO7
42	SDGPA100							50p	0 0	50 - 1.0	100			18		Si$	DO7
43	SDGPCL12							50p	0.0	50 - 1.0	12			9.0		Si$	DO7
44	TIXV05	300G						500f	0.0	30-70Ø	6 0				250m	GA♦$	F10b
45#	X1H121	125G						500fØ	0.0	50 - .70Ø	6.0 ☑						F3a
46	1N5156							500f△	6 0	30-.70Ø	20 $				4 5	Si	F10j
47	1N5157							500f△	6.0	30-.70Ø	20 $				4 5	Si	F27n
48#	4022-11-00,01,02		120G					50p	6 0	.40 - .80Ø	24				4 0	Si	Z53
49#	4022-12-00,01,02		140G					50p	6.0	40 - 80Ø	24				4 0	Si	Z53
50#	4022-13-00,01,02		160G					50p	6.0	40 - 80Ø	24				4.0	Si	Z53
51#	DC4022A00,01,02		10G					500f	6.0	.40-80Ø	24				4 0	Si	Z53
52#	DC4022B00,01,02		10G					500f	6.0	40-80Ø	24				4.0	Si	Z53
53#	DC4022C00,01,02		20G					500f	6.0	.40-80Ø	24				4.0	Si	Z53
54#	DC4022D00,01,02		30G					500f	6.0	.40-80Ø	24				4.0	Si	Z53
55#	DC4022E00,01,02		40G					500f	6.0	.40-.80Ø	24				4 0	Si	Z53
56#	DC4022F00,01,02		50G					500f	6.0	40-.80Ø	24				4 0	Si	Z53
57#	DC4022G00,01,02	60G						500f	6 0	40-.80Ø	24				4.0	Si	Z53
58#	DC4022H00,01,02	70G						500f	6 0	.40-.80Ø	24				4.0	Si	Z53
59#	DC4022J00,01,02	80G						500f	6.0	40-.80Ø	24				4 0	Si	Z53
60#	DC4022K00,01,02	90G						500f	6.0	40-.80Ø	24				4.0	Si	Z53
61#	DC4022L00,01,02	100G						500f	6 0	40-.80Ø	24				4.0	Si	Z53
62	L8512	150						50pØ	6.0	40 - 80Ø	50 ☑				4 5	Si△$	F49c
63	MA4958E	250G						50p	6.0	30 - .70Ø	35				.50	Si$	F27r
64	MA4958F	250G						50p	6 0	30 - 70Ø	35				50	Si$	S215a
65#	SFD2-410E,F,G,H	80G	100G	150G	200G			500fØ	6.0		10				1.0	Si$	F27d
66#	SFD2-411E,F,G,H	80G	100G	150G	200G			500fØ	6.0		30				1.0	Si$	F27d
67#	SFD2-412E,F,G,H	80G	100G	150G	200G			500fØ	6.0		60				1 0	Si$	F27d
68#	SFD411E,G,H	80G	150G	200G				500fØ	6.0		30				1.5	Si$	F49
69#	SFD412E,G,H	80G	150G	200G				500fØ	6 0		60				1.5	Si$	F49
70	SFD413A,B,C,D	10G	20G	40G	60G			500f	6 0		90					Si	Z16
71	MA4036	70G						52p	0 0	.40 - 65						Si	P8
72	TIXV02	150G						530f†	0 0	35-70Ø	6 0				250m	GA△$	F10b
73	D5047C	300G						550f§		300-800	6 0 ☑				300m	GA§△	F27g
74	D5046	150G						550f	0.0	30-.80Ø	5.5 ☑				30	Si△§	F27g
75	D5371,A,B	75G	100G	125G				550f	0 0	.30-.80Ø	5.5 ☑				200m	Si§△	F27j
76	D5147E	400G						600f§☑		.300-.600	6 0 ☑				200m	GA§△	F54c
77	D5347	150G						600f	0 0	20-1 0Ø	6.0 ☑				30	GA§△	F27j
78	D5357	150G						600f	0.0	.20-1 0Ø	6.0 ☑				30	GA§△	F56f
79	MA4362	200G						60p	0 0	40 - .80	5.5					Si§	F9
80	MA4537		80G					.60p	0.0	.60 - 3.0Ø	3 0					Si	F21
81	MA4538	100G						.60p☑	0 0	40 - .60Ø						Si	F21
82	SD11A120							.60p	0 0	.60 - 1 2	120			18		Si$	P3
83	SD11CL18							60p	0.0	.60 - 1.2	18			9 0		Si$	P3
84	SD12A120							60p	0.0	.60 - 1 2	120			18		Si$	F3a
85	SD12CL18							60p	0 0	60 - 1.2	18			9 0		Si$	F3a
86	SD22A120							.60p	0 0	60 - 1.2	120			18		Si$	F11
87	SD22CL18							60p	0.0	60 - 1.2	18			9.0		Si$	F11
88	SD32A120							60p	0.0	.60 - 1.2	120			18		Si$	F21
89	SD32CL18							60p	0 0	60 - 1 2	18			9.0		Si$	F21
90	SD42A120							60p	0.0	.60 - 1.2	120			18		Si$	F9a
91	SD42CL18							60p	0 0	60 - 1.2	18			9 0		Si$	F9a
92	SDGPA120							60p	0 0	.60 - 1.2	120			18		Si$	DO7
93	SDGPCL18							60p	0.0	60 - 1 2	18			9 0		Si$	DO7
94#	4032-11-00,01,02		120G					.60p	6.0	.40 - .80Ø	48				4.0	Si	Z53
95	A706-3A,B,C,D,E,F	5.0G	10G	15G	20G	30G	40G	.60p	6 0	40 - .80Ø	24				.75	Si△$	F11
96	A706-3G,H,I,J,K,L	50G	60G	70G	80G	90G	100G	.60p	6 0	40 - .80Ø	24				.75	Si△$	F11
97	A706-3M,N	120G	140G					60p	6 0	40 - 80Ø	24				.75	Si△$	F11
98	A706-4A,B,C,D,E,F	5.0G	10G	15G	20G	30G	40G	60p	6 0	40 - 80Ø	30				.75	Si△$	F11
99	A706-4G,H,I,J,K,L	50G	60G	70G	80G	90G	100G	600f	6 0	40-80Ø	30				750m	Si△$	F11
100	A706-4M	120G						600f	6.0	40-.80Ø	30				750m	Si△$	F11
101	A706-5A,B,C,D,E,F	5.0G	10G	15G	20G	30G	40G	600f	6.0	40-80Ø	45				750m	Si△$	F11
102	A706-5G,H,I,J,K,L	50G	60G	70G	80G	90G	100G	600f	6 0	40-.80Ø	45				750m	Si△$	F11
103	A706-5M	120G						600f	6 0	40-.80Ø	45				750m	Si△$	F11
104	A706-6A,B,C,D,E,F	5.0G	10G	15G	20G	30G	40G	600f	6 0	40-.80Ø	60				750m	Si△$	F11
105	A706-6G,H,I,J,K,L	50G	60G	70G	80G	90G	100G	600f	6.0	.40-.80Ø	60				750m	Si△$	F11
106	A706-7A,B,C,D,E,F	5 0G	10G	15G	20G	30G	40G	600f	6 0	.40-80Ø	90				750m	Si△$	F11
107	A706-7G,H,I,J	50G	60G	70G	80G			600f	6.0	40-80Ø	90				750m	Si△$	F11
108	A706-8A,B,C,D,E,F	5 0G	10G	15G	20G	30G	40G	60p	6 0	40 - .80Ø	120				.75	Si△$	F11
109	A706-8G,H	50G	60G					600f	6 0	40-80Ø	120				170m	Si△$	F11
110#	DC4032A00,01,02	10G						600f	6 0	.40-.80Ø	48				4.0	Si	Z53

SYMBOLS AND CODES EXPLAINED IN INTERPRETER

10 VOLTAGE VARIABLE CAPACITORS & VARACTOR DIODES

IN ORDER OF (1) TYPICAL CAPACITANCE, (2) TEST VOLTAGE, and (3) TYPE No.

LINE No	3 TYPE No.	MINIMUM CUTOFF FREQUENCY (Corresponding to Type Numbers in previous column) (Hz)	(Hz)	(Hz)	(Hz)	(Hz)	(Hz)	TYP. CAP. 1 CAP. Cj (F)	2 at TEST VOLT (V)	CAPACITANCE RANGE (for V = 0 to PIV) Ø - at TEST VOLT. (pF)	PIV (V)	Q FACTOR MIN. Q	at TEST FREQ (Hz)	MAX. SER. RES. Rs (Ω)	MAX DISS. @ 25°C (W)	DESCRIPTION MAT.	DWG. No.
1#	DC4032B00,01,02	10G						600f	6 0	40- 80Ø	48				4 0	Si	Z53
2#	DC4032C00,01,02	20G						600f	6 0	40- 80Ø	48				4 0	Si	Z53
3#	DC4032D00,01,02	30G						600f	6 0	40-.80Ø	48				4 0	Si	Z53
4#	DC4032E00,01,02	40G						600f	6 0	40- 80Ø	48				4 0	Si	Z53
5#	DC4032F00,01,02	50G						600f	6.0	.40-.80Ø	48				4 0	Si	Z53
6#	DC4032G00,01,02	60G						600f	6 0	40- 80Ø	48				4 0	Si	Z53
7#	DC4032H00,01,02	70G						600f	6.0	40-.80Ø	48				4 0	Si	Z53
8#	DC4032J00,01,02	80G						600f	6.0	.40- 80Ø	48				4 0	Si	Z53
9#	DC4032K00,01,02	90G						600f	6 0	40- 80Ø	48				4 0	Si	Z53
10#	DC4032L00,01,02	100G						600f	6 0	.40-.80Ø	48				4 0	Si	Z53
11#	DC4042A00,01,02	10G						600f	6.0	.40-.80Ø	60				4 0	Si	Z53
12#	DC4042B00,01,02	10G						600f	6 0	.40- 80Ø	60				4 0	Si	Z53
13#	DC4042C00,01,02	20G						600f	6.0	40-.80Ø	60				4.0	Si	Z53
14#	DC4042D00,01,02	30G						600f	6 0	40-.80Ø	60				4 0	Si	Z53
15#	DC4042E00,01,02	40G						600f	6 0	.40-.80Ø	60				4 0	Si	Z53
16#	DC4042F00,01,02	50G						600f	6 0	40- 80Ø	60				4 0	Si	Z53
17#	DC4042G00,01,02	60G						600f	6.0	40- 80Ø	60				4 0	Si	Z53
18#	DC4042H00,01,02	70G						600f	6 0	40- 80Ø	60				4 0	Si	Z53
19#	DC4042J00,01,02	80G						600f	6.0	40- 80Ø	60				4 0	Si	Z53
20#	DC4042K00,01,02	90G						600f	6 0	40- 80Ø	60				4 0	Si	Z53
21#	DC4042L00,01,02	100G						600f	6 0	40- 80Ø	60				4 0	Si	Z53
22#	DC4052A00,01,02	10G						600f	6 0	40- 80Ø	90				4 0	Si	Z53
23#	DC4052B00,01,02	10G						600f	6 0	40- 80Ø	90				4 0	Si	Z53
24#	DC4052C00,01,02	20G						600f	6 0	40- 80Ø	90				4 0	Si	Z53
25#	DC4052D00,01,02	30G						600f	6 0	40-.80Ø	90				4.0	Si	Z53
26#	DC4052E00,01,02	40G						600f	6 0	40- 80Ø	90				4 0	Si	Z53
27#	DC4052F00,01,02		50G					600f	6 0	40-.80Ø	90				4 0	Si	Z53
28#	DC4052G00,01,02		60G					600f	6 0	40-.80Ø	90				4 0	Si	Z53
29#	DC4052H00,01,02		70G					600f	6 0	40- 80Ø	90				4 0	Si	Z53
30#	DC4052J00,01,02		80G					600f	6 0	40- 80Ø	90				4 0	Si	Z53
31#	DC4062A00,01,02		10G					600f	6.0	40-.80Ø	120				4 0	Si	Z53
32#	DC4062B00,01,02		10G					600f	6 0	40- 80Ø	120				4 0	Si	Z53
33#	DC4062C00,01,02		20G					600f	6.0	40- 80Ø	120				4 0	Si	Z53
34#	DC4062D00,01,02		30G					600f	6.0	40- 80Ø	120				4 0	Si	Z53
35#	DC4062E00,01,02		40G					600f	6 0	.40- 80Ø	120				4 0	Si	Z53
36#	DC4062F00,01,02		50G					600f	6 0	40- 80Ø	120				4 0	Si	Z53
37#	DC4122A01,02	10G						600f	6 0	.40- 80	24				4.0	Si	Z53
38#	DC4122B01,02	10G						600f	6.0	40- 80	24				4 0	Si	Z53
39#	DC4122C01,02	20G						600f	6 0	40- 80	24				4 0	Si	Z53
40#	DC4122D01,02	30G						600f	6.0	40- 80	24				4 0	Si	Z53
41#	DC4122E01,02	40G						600f	6.0	40- 80	24				4 0	Si	Z53
42#	DC4122F01,02	50G						600f	6 0	40- 80	24				4 0	Si	Z53
43#	DC4122G01,02	60G						600f	6.0	40- 80	24				4 0	Si	Z53
44#	DC4122H01,02	70G						600f	6 0	40- 80	24				4 0	Si	Z53
45#	DC4122J01,02	80G						600f	6 0	40- 80	24				4 0	Si	Z53
46#	DC4122K01,02	90G						600f	6 0	40- 80	24				4 0	Si	Z53
47#	DC4122L01,02	100G						600f	6 0	40- 80	24				4 0	Si	Z53
48#	DC4122M01,02	120G						600f	6 0	40- 80	24				4 0	Si	Z53
49#	DC4132A01,02	10G						600f	6 0	40- 80	48				4 0	Si	Z53
50#	DC4132B01,02	10G						600f	6 0	40- 80	48				4 0	Si	Z53
51#	DC4132C01,02	20G						600f	6.0	40-.80	48				4 0	Si	Z53
52#	DC4132D01,02	30G						600f	6.0	40- 80	48				4 0	Si	Z53
53#	DC4132E01,02	40G						600f	6 0	40- 80	48				4 0	Si	Z53
54#	DC4132F01,02	50G						600f	6.0	40-.80	48				4 0	Si	Z53
55#	DC4132G01,02	60G						600f	6 0	40- 80	48				4 0	Si	Z53
56#	DC4132H01,02	70G						600f	6.0	40- 80	48				4 0	Si	Z53
57#	DC4132J01,02	80G						600f	6 0	40- 80	48				4 0	Si	Z53
58#	DC4132K01,02	90G						600f	6.0	40-.80	48				4 0	Si	Z53
59#	DC4132L01,02	100G						600f	6 0	.40- 80	48				4 0	Si	Z53
60#	DC4132M01,02	120G						600f	6 0	40- 80	48				4 0	Si	Z53
61#	DC4142A01,02	10G						600f	6 0	40- 80	60				4 0	Si	Z53
62#	DC4142B01,02	10G						600f	6 0	40- 80	60				4 0	Si	Z53
63#	DC4142C01,02	20G						600f	6 0	40- 80	60				4 0	Si	Z53
64#	DC4142D01,02	30G						600f	6 0	40- 80	60				4 0	Si	Z53
65#	DC4142E01,02	40G						600f	6 0	40-.80	60				4 0	Si	Z53
66#	DC4142F01,02	50G						600f	6 0	40- 80	60				4 0	Si	Z53
67#	DC4142G01,02	60G						600f	6 0	40- 80	60				4 0	Si	Z53
68#	DC4142H01,02	70G						600f	6 0	40- 80	60				4 0	Si	Z53
69#	DC4142J01,02	80G						600f	6 0	40-.80	60				4 0	Si	Z53
70#	DC4142K01,02	90G						600f	6 0	40-.80	60				4 0	Si	Z53
71#	DC4142L01,02	100G						600f	6 0	.40- 80	60				4 0	Si	Z53
72#	DC4152A01,02	10G						600f	6 0	40-.80	90				4 0	Si	Z53
73#	DC4152B01,02	10G						600f	6 0	40-.80	90				4 0	Si	Z53
74#	DC4152C01,02	20G						600f	6 0	40- 80	90				4 0	Si	Z53
75#	DC4152D01,02	30G						600f	6 0	40- 80	90				4 0	Si	Z53
76#	DC4152E01,02	40G						600f	6 0	.40-.80	90				4 0	Si	Z53
77#	DC4152F01,02	50G						600f	6 0	40- 80	90				4 0	Si	Z53
78#	DC4152G01,02	60G						600f	6 0	40- 80	90				4 0	Si	Z53
79#	DC4152H01,02	70G						600f	6 0	.40- 80	90				4 0	Si	Z53
80#	DC4152J01,02	80G						600f	6 0	40- 80	90				4 0	Si	Z53
81#	DC4162A01,02	10G						600f	6 0	.40-.80	120				4 0	Si	Z53
82#	DC4162B01,02	10G						600f	6 0	40- 80	120				4 0	Si	Z53
83#	DC4162C01,02	20G						600f	6 0	40- 80	120				4 0	Si	Z53
84#	DC4162D01,02	30G						600f	6 0	40-.80	120				4 0	Si	Z53
85#	DC4162E01,02	40G						600f	6 0	40- 80	120				4 0	Si	Z53
86#	DC4162F01,02	50G						600f	6 0	40- 80	120				4 0	Si	Z53
87	MA450E,F,G,H	70G	80G	90G	100G			600f	6 0	-2 0	6.0				15	Si	P3a△
88	MA460E,F,G,H	70G	80G	90G	100G			600f	6 0	-2 0	6 0				15	Si	P3△
89	MA4085							60p	6 0	.40 - .80	24						F27d
90	MA4281							60p	6 0	40 - 80	30			40	60	Si	A31e
91	MA4381							60p	6 0	.40 - .80	30			40		Si	A31e
92	MA4967E,F	150G						600fØ	6.0	60-1 3Ø	30 ⊠				600m	Si	Z48
93#	SV55A	50G						60p	6 0	40 - 80Ø	48				1 0	Si	F27a
94#	BSC13	33G						60p	18	40 - .80	18	3 3	10G	4 0	30	Si	F3a
95#	BSC25	33G						60p	60	40 - 80	60	3 3	10G	4 0	1 0	Si	F3a
96	PA0104H,J,K,L	100G	120G	140G	160G			62p	6 0	50 - 75Ø	6 0	⊠	10G		20	Si	F27d
97	PA0704H,J,K,L	100G	120G	140G	160G			62p	6 0	50 - 75Ø	6 0	⊠	10G		20	Si	F9
98	D5047	150G						650f§		300-1 0	6 0 ⊠				300m	GA§△	F27g
99	D5047A	200G						650f§		300-1 0	6 0 ⊠				300m	GA§△	F27g
100	D5047B	250G						650f§		300-1 0	6 0 ⊠				300m	GA§△	F27g
101	D5337,A	150G	200G					65p	0 0	30 - 1 0Ø	6 0 ⊠				20	GA§△	F27h
102	MA4536	70G						650f⊠	0 0								
103	MA4542	70G						650f⊠	0 0								
104	MS3160,1-5	10G	20G	40G	60G	80G	100G	65p	6 0	20 - 1 1	45				30	GS	P3
105	MS3200,1-5	10G	20G	40G	60G	80G	100G	65p	6 0	20 - 1.1	60				.30	GS	P3
106	MS3250,1-5	10G	20G	40G	60G	80G	100G	65p	6 0	20 - 1 1	18				30	GS	P3
107	MS4150,1-5	10G	20G	40G	60G	80G	100G	65p	6 0	20 - 1.1Ø	18	⊠	10G		30	GA	F27d
108	MS4200,1-5	10G	20G	40G	60G	80G	100G	65p	6 0	20 - 1 1Ø	30	⊠	10G		30	GA	F27d
109	MS4250,1-5	10G	20G	40G	60G	80G	100G	65p	6 0	20 - 1 1Ø	45	⊠	10G		30	GA	F27d
110	MS4300,1-5	10G	20G	40G	60G	80G	100G	65p	6 0	20 - 1 1Ø	60	⊠	10G		30	GA	F27d

SYMBOLS AND CODES EXPLAINED IN INTERPRETER

10 VOLTAGE VARIABLE CAPACITORS & VARACTOR DIODES

IN ORDER OF (1) TYPICAL CAPACITANCE, (2) TEST VOLTAGE, and (3) TYPE No.

LINE No	3 TYPE No	MINIMUM CUTOFF FREQUENCY (Corresponding to Type Numbers in previous column) (Hz)	(Hz)	(Hz)	(Hz)	(Hz)	(Hz)	TYP. CAP. 1 CAP. Cj (F)	2 at TEST VOLT (V)	CAPACITANCE RANGE (for V = 0 to PIV) Ø - at TEST VOLT. (pF)	PIV (V)	Q FACTOR MIN Q	at TEST FREQ (Hz)	MAX. SER. RES. Rs (Ω)	MAX. DISS. @ 25°C (W)	DESCRIPTION MAT.	DWG. No.
1	D5147D	350G						700f§☑		300-700	6 0 ☑				200m	GA§△	F54c
2	D5347A,B	200G	250G					70p	0.0	40 - 1.0Ø	6 0 ☑				30	GA§△	F27j
3	D5357A,B	200G	250G					.70p	0 0	40 - 1.0Ø	6 0 ☑				30	GA§△	F56f
4	GC5413	300G						700f	0 0	60-80	6 0				450m	GA	F54c
5	GC5423	300G						700f	0.0	60-80	12				450m	GA	F54c
6	MS262,3,4	80G	105G	130G				700f△	0.0	20-1.0Ø	6 0 ☑				.15 ☑	GA△§	F10b
7	MS4101,2,3	80G	105G	130G				700f△	0 0	20-1.0Ø	6 0 ☑				15 ☑	GA△§	F27d
8	MS4403	130G						700f△	0.0	20-1 0Ø	6 0 ☑				150m☑	GA△§	F54
9#	MV8207C	200G						700fØ	0.0		18 ☑				1 4	GA$	F27p
10	SD11A24							70p	0.0	70 - 1.4	24			18		Si$	P3
11	SD12A24							70p	0 0	70 - 1.4	24			18		Si$	F3a
12	SD22A24							70p	0.0	70 - 1 4	24			18		Si$	F11
13	SD32A24							70p	0.0	.70 - 1.4	24			18		Si$	F21
14	SD42A24							70p	0 0	70 - 1.4	24			18		Si$	F9a
15	SDGPA24							.70p	0.0	.70 - 1 4	24			18		Si$	DO7
16	B006004D,E,F,G,H	40G	60G	80G	100G	140G		700f	6 0	.40-1.0Ø	6 0				200m	Si	F27k
17	B015004D,E,F,G,H	40G	60G	80G	100G	140G		700f	6.0	40-1 0Ø	15				500m	Si	F27k
18	B024004D,E,F,G,H	40G	60G	80G	100G	140G		700f	6.0	.40-1.0Ø	24				700m	Si	F27k
19	B030004C,E,F,G	20G	40G	60G	80G			70p	6 0	.40 - 1 0Ø	30				.80	Si	F27k
20	B045004C,D,E,F	20G	40G	60G	80G			70p	6 0	40 - 1.0Ø	45				1 1	Si	F27k
21	C006004D,E,F,G,H	40G	60G	80G	100G	140G		700f	6.0	40-1.0Ø	6 0	1 1				Si	F49
22	C015004D,E,F,G,H	40G	60G	80G	100G	140G		700f	6 0	40-1.0Ø	15	1 3				Si	F49
23	C024004D,E,F,G,H	40G	60G	80G	100G	140G		700f	6 0	.40-1 0Ø	24	1 4				Si	F49
24	C030004C,E,F,G	20G	40G	60G	80G			70p	6 0	.40 - 1 0Ø	30				1.5	Si	F49
25	C045004C,D,E,F	20G	40G	60G	80G			70p	6 0	40 - 1 0Ø	45				1 6	Si	F49
26	D4831,A-E	20G	30G	40G	50G	60G	70G	700f	6 0	.40-1 0Ø	30				2.5	Si$	F3a
27	L8553	175						70pØ	6 0	50 - 1 0Ø	40 ☑				3 0	Si△$	F27ac
28	L8563	175						70pØ	6 0	50 - 1 0Ø	40 ☑				3 8	Si△$	F49c
29	P006004D,E-H	40G	60G	80G	100G	140G		70p	6 0	40 - 1 0Ø	6 0				.20	Si	F27ad
30	P015004D,E-H	40G	60G	80G	100G	140G		.70p	6.0	40 - 1.0Ø	15				.50	Si	F27ad
31	P024004D,E-H	40G	60G	80G	100G	140G		70p	6.0	40 - 1.0Ø	24				70	Si	F27ad
32	P045004C,D,E,F	20G	40G	60G	80G			.70p	6 0	.40 - 1 0Ø	45				1 1	Si	F27ad
33	PH1201-1,2,3,4		5.0G	10G	15G	20G		.70p	6.0	.40 - 1.0Ø	6.0	☑	10G			Si	F58
34	PH1201A,B-F	30G	40G	50G	60G	70G	80G	700f	6 0	40-1 0Ø	6 0	☑	10G			Si	F58
35	PH1201G,H,J-L	90G	100G	120G	140G	160G		700f	6.0	40-1.0Ø		☑	10G			Si	F58
36	PH1201N,P	180G	200G					700f	6.0	.40-1 0Ø		☑	10G			Si	F58
37	PH1211-1,2,3,4		5.0G	10G	15G	20G		70p	6.0	.40 - 1.0Ø	15	☑	10G			Si	F58
38	PH1211A,B-F	30G	40G	50G	60G	70G	80G	700f	6.0	40-1 0Ø	15	☑	10G			Si	F58
39	PH1211G,H,J-L	90G	100G	120G	140G	160G		700f	6.0	40-1.0Ø		☑	10G			Si	F58
40	PH1211N,P	180G	200G					700f	6.0	40-1 0Ø		☑	10G			Si	F58
41	PH1221-1,2,3,4		5.0G	10G	15G	20G		70p	6.0	40 - 1.0Ø	24	☑	10G			Si	F58
42	PH1221A,B-F	30G	40G	50G	60G	70G	80G	700f	6.0	.40-1.0Ø	24	☑	10G			Si	F58
43	PH1221G,H,J-L	90G	100G	120G	140G	160G		700f	6.0	40-1 0Ø		☑	10G			Si	F58
44	PH1231-1,2,3,4		5 0G	10G	15G	20G		70p	6.0	40 - 1 0Ø	30	☑	10G			Si	F58
45	PH1231A,B-F	30G	40G	50G	60G	70G	80G	700f	6.0	.40-1 0Ø	30	☑	10G			Si	F58
46	PH1231G,H,J	90G	100G	120G				700f	6.0	.40-1.0Ø	30	☑	10G			Si	F58
47	PH1241-1,2,3,4		5 0G	10G	15G	20G		70p	6.0	.40 - 1.0Ø	45	☑	10G			Si	F58
48	PH1241A,B-F	30G	40G	50G	60G	70G	80G	700f	6.0	40-1.0Ø	45	☑	10G			Si	F58
49	PH1241G,H,J	90G	100G	120G				700f	6.0	.40-1 0Ø	45	☑	10G			Si	F58
50	PH1251-1,2,3,4		5.0G	10G	15G	20G		.70p	6.0	.40 - 1.0Ø	60	☑	10G			Si	F58
51	PH1251A,B-F	30G	40G	50G	60G	70G	80G	700f	6.0	.40-1.0Ø	60	☑	10G			Si	F58
52	PH1251G,H	90G	100G					700f	6.0	40-1 0Ø	60	☑	10G			Si	F58
53	PH1261-1,2,3,4		5.0G	10G	15G	20G		70p	6 0	.40 - 1.0Ø	90	☑	10G			Si	F58
54	PH1261A,B-F	30G	40G	50G	60G	70G	80G	700f	6.0	.40-1 0Ø	90	☑	10G			Si	F58
55	PH1261G	90G						700f	6 0	40-1 0Ø	90	☑	10G			Si	F58
56	PH1271-1,2,3,4		5 0G	10G	15G	20G		70p	6 0	.40 - 1 0Ø	120	☑	10G			Si	F58
57	PH1271A,B-E	30G	40G	50G	60G	70G		700f	6.0	.40-1 0Ø	120	☑	10G			Si	F58
58	PH1281-1,2,3,4		5.0G	10G	15G	20G		70p	6.0	.40 - 1.0Ø	150	☑	10G			Si	F58
59	PH1281A,B,C	30G	40G	50G				700f	6.0	40-1.0Ø	150	☑	10G			Si	F58
60	PH1291-1,2,3,4		5 0G	10G	15G	20G		70p	6 0	.40 - 1 0Ø	200	☑	10G			Si	F58
61	PH1291A	30G						700f	6 0	40-1.0Ø	200	☑	10G			Si	F58
62	PL0101-1,2,3,4		5 0G	10G	15G	20G		70p	6 0	.40 - 1 0Ø	6.0	☑	10G			Si	F27d
63	PL0101A,B-F	30G	40G	50G	60G	70G	80G	700f	6 0	.40-1 0Ø	6 0	☑	10G			Si	F27d
64	PL0101G,H,J-L	90G	100G	120G	140G	160G		700f	6 0	.40-1.0Ø	6 0	☑	10G			Si	F27d
65	PL0101N,P	180G	200G					700f	6 0	40-1.0Ø	6.0	☑	10G			Si	F27d
66	PL0111-1,2,3,4		5 0G	10G	15G	20G		70p	6.0	.40 - 1 0Ø	15	☑	10G			Si	F27d
67	PL0111A,B-F	30G	40G	50G	60G	70G	80G	700f	6.0	40-1.0Ø	15	☑	10G			Si	F27d
68	PL0111G,H,J-L	90G	100G	120G	140G	160G		700f	6 0	.40-1.0Ø	15	☑	10G			Si	F27d
69	PL0111N,P	180G	200G					700f	6.0	.40-1.0Ø	15	☑	10G			Si	F27d
70	PL0121-1,2,3,4		5.0G	10G	15G	20G		.70p	6 0	.40 - 1 0Ø	24	☑	10G			Si	F27d
71	PL0121A,B-F	30G	40G	50G	60G	70G	80G	700f	6.0	40-1 0Ø	24	☑	10G			Si	F27d
72	PL0121G,H,J-L	90G	100G	120G	140G	160G		700f	6.0	.40-1.0Ø	24	☑	10G			Si	F27d
73	PL0131-1,2,3,4		5.0G	10G	15G	20G		.70p	6.0	40 - 1.0Ø	30	☑	10G			Si	F27d
74	PL0131A,B-F	30G	40G	50G	60G	70G	80G	700f	6.0	.40-1.0Ø	30	☑	10G			Si	F27d
75	PL0131G,H,J	90G	100G	120G				700f	6.0	.40-1.0Ø	30	☑	10G			Si	F27d
76	PL0141-1,2,3,4		5.0G	10G	15G	20G		.70p	6.0	.40 - 1 0Ø	45	☑	10G			Si	F27d
77	PL0141A,B-F	30G	40G	50G	60G	70G	80G	700f	6.0	40-1.0Ø	45	☑	10G			Si	F27d
78	PL0141G,H,J	90G	100G	120G				700f	6.0	.40-1.0Ø	45	☑	10G			Si	F27d
79	PL0151-1,2,3,4		5.0G	10G	15G	20G		.70p	6.0	.40 - 1.0Ø	60	☑	10G			Si	F27d
80	PL0151A,B-F	30G	40G	50G	60G	70G	80G	700f	6.0	.40-1.0Ø	60	☑	10G			Si	F27d
81	PL0151G,H	90G	100G					700f	6.0	.40-1.0Ø	60	☑	10G			Si	F27d
82	PL0161-1,2,3,4		5 0G	10G	15G	20G		70p	6.0	.40 - 1 0Ø	90	☑	10G			Si	F27d
83	PL0161A,B-F	30G	40G	50G	60G	70G	80G	700f	6.0	.40-1.0Ø	90	☑	10G			Si	F27d
84	PL0161G	90G						700f	6.0	.40-1.0Ø	90	☑	10G			Si	F27d
85	PL0171-1,2,3,4		5 0G	10G	15G	20G		.70p	6.0	.40 - 1.0Ø	120	☑	10G			Si	F27d
86	PL0171A,B-E	30G	40G	50G	60G	70G		700f	6.0	.40-1.0Ø	120	☑	10G			Si	F27d
87	PL0181-1,2,3,4		5.0G	10G	15G	20G		.70p	6.0	.40 - 1.0Ø	150	☑	10G			Si	F27d
88	PL0181A,B,C	30G	40G	50G				700f	6.0	.40-1.0Ø	150	☑	10G			Si	F27d
89	PL0501-1,2,3,4		5 0G	10G	15G	20G		.70p	6.0	.40 - 1.0Ø	6.0	☑	10G			Si	F10p
90	PL0501A,B-F	30G	40G	50G	60G	70G	80G	700f	6.0	.40-1.0Ø	6.0	☑	10G			Si	F10p
91	PL0501G,H,J-L	90G	100G	120G	140G	160G		700f	6.0	.40-1 0Ø	6 0	☑	10G			Si	F10p
92	PL0501N,P	180G	200G					700f	6.0	.40-1 0Ø	6 0	☑	10G			Si	F10p
93	PL0511-1,2,3,4		5.0G	10G	15G	20G		.70p	6.0	.40 - 1.0Ø	15	☑	10G			Si	F10p
94	PL0511A,B-F	30G	40G	50G	60G	70G	80G	700f	6.0	40-1.0Ø	15	☑	10G			Si	F10p
95	PL0511G,H,J-L	90G	100G	120G	140G	160G		700f	6.0	.40-1.0Ø	15	☑	10G			Si	F10p
96	PL0511N,P	180G	200G					700f	6 0	40-1 0Ø	15	☑	10G			Si	F10p
97	PL0521-1,2,3,4		5 0G	10G	15G	20G		.70p	6 0	.40 - 1.0Ø	24	☑	10G			Si	F10p
98	PL0521A,B-F	30G	40G	50G	60G	70G	80G	700f	6.0	.40-1.0Ø	24	☑	10G			Si	F10p
99	PL0521G,H,J-L	90G	100G	120G	140G	160G		700f	6.0	.40-1.0Ø	24	☑	10G			Si	F10p
100	PL0531-1,2,3,4		5.0G	10G	15G	20G		.70p	6 0	.40 - 1 0Ø	30	☑	10G			Si	F10p
101	PL0531A,B-F	30G	40G	50G	60G	70G	80G	700f	6 0	.40-1.0Ø	30	☑	10G			Si	F10p
102	PL0531G,H,J	90G	100G	120G				700f	6.0	.40-1.0Ø	30	☑	10G			Si	F10p
103	PL0541-1,2,3,4		5 0G	10G	15G	20G		70p	6 0	40 - 1 0Ø	45	☑	10G			Si	F10p
104	PL0541A,B-F	30G	40G	50G	60G	70G	80G	700f	6.0	.40-1.0Ø	45	☑	10G			Si	F10p
105	PL0541G,H,J	90G	100G	120G				700f	6 0	.40-1.0Ø	45	☑	10G			Si	F10p
106	PL0551-1,2,3,4		5.0G	10G	15G	20G		70p	6 0	.40 - 1.0Ø	60	☑	10G			Si	F10p
107	PL0551A,B-F	30G	40G	50G	60G	70G	80G	700f	6.0	.40-1.0Ø	60	☑	10G			Si	F10p
108	PL0551G,H	90G	100G					700f	6.0	.40-1.0Ø	60	☑	10G			Si	F10p
109	PL0561-1,2,3,4		5.0G	10G	15G	20G		70p	6.0	40 - 1 0Ø	90	☑	10G			Si	F10p
110	PL0561A,B-F	30G	40G	50G	60G	70G	80G	700f	6.0	.40-1.0Ø	90	☑	10G			Si	F10p

SYMBOLS AND CODES EXPLAINED IN INTERPRETER

10 VOLTAGE VARIABLE CAPACITORS & VARACTOR DIODES

IN ORDER OF (1) TYPICAL CAPACITANCE, (2) TEST VOLTAGE, and (3) TYPE No.

LINE No.	3 TYPE No.	MINIMUM CUTOFF FREQUENCY (Corresponding to Type Numbers in previous column) (Hz)	(Hz)	(Hz)	(Hz)	(Hz)	(Hz)	TYP. CAP. 1 CAP Cj (F)	2 at TEST VOLT (V)	CAPACITANCE RANGE (for V = 0 to PIV) Ø - at TEST VOLT. (pF)	PIV (V)	Q FACTOR MIN. Q	at TEST FREQ (Hz)	MAX. SER. RES. Rs (Ω)	MAX. DISS. @ 25°C (W)	DESCRIPTION MAT.	DWG. No.
1	PL0561G	90G						700f	6.0	.40-1.0Ø	90	∅	10G			Si	F10p
2	PL0571-1,2,3,4		5 0G	10G	15G	20G		.70p	6 0	40 - 1 0Ø	120	∅	10G			Si	F10p
3	PL0571A,B-E	30G	40G	50G	60G	70G		700f	6.0	.40-1.0Ø	120	∅	10G			Si	F10p
4	PL0581-1,2,3,4		5.0G	10G	15G	20G		.70p	6.0	40 - 1.0Ø	150	∅	10G			Si	F10p
5	PL0591-1,2,3,4		5 0G	10G	15G	20G		.70p	6.0	40 - 1.0Ø	200	∅	10G			Si	F10p
6	MA4035	60G						75p	0 0	.60 - .90						Si	P8
7	MA4535	60G						.75p	0 0	.60 - 90	3.0					Si§	F21
8	MA4541	70G						75p	0.0	.60 - 90	3 0					Si§	F9
9	MA4546	70G						750f	0.0		3 0					Si§	F3a△
10	BXY32	150GØ						750f	6 0	50-1.0Ø					1 0	Si$#	F27h
11▼	GC3307	175G						750f	6 0	500f-1.0Ø	70				8.0	Si	F78a
12	D5147C	300G						800f§∅		.300-.800	6.0 ∅				200m	GA§△	F54c
13	D5254A,B,C	200GØ	250G	300G				800f		600-1 0	10 ∅				400m	GA§△	F27g
14#	BSC03	80G						80p	0.0	.50 - 1 0	4.5	6.0	10G	5.0	07	Si	F3a
15#	BSC05	100G						.80p	0 0	.50 - 1 0	4 5	9 0	10G	4.0	07	Si	F3a
16	MA4255	60G						80p	0 0	.50 - 1 4	6.0	6 0	10G			Si§	F9
17	SD11A6							.80p	0 0	.80 - 1 6	6.0			4 5		Si$	P3
18	SD12A6							.80p	0 0	.80 - 1 6	6 0			4.5		Si$	F3a
19	SD22A6							80p	0.0	80 - 1 6	6.0			4.5		Si$	F11
20	SD32A6							.80p	0.0	.80 - 1 6	6 0			4.5		Si$	F21
21	SD42A6							.80p	0.0	.80 - 1.6	6 0			4.5		Si$	F9a
22	SDGPA6							80p	0.0	.80 - 1 6	6.0			4.5		Si$	DO7
23	GC1600	100G						800f§	4.0	4 2;0 0V-45V$	45 ∅	2 0k	50M				F27w
24#	1S1562	50G						800f	6.0	.600-1 0Ø	60				1 0	Si$#	F49d
25#	1S1572	50G						800f	6 0	600-1.0Ø	60				600m	Si$#	F27ad
26	MA450D							800f	6 0		6 0	5 0	10G			Si	P3a△
27	MA460D							800f	6.0		6.0	5.0	10G			Si	P3a△
28	MA4631A,1,2	80G	120G	150G				800f∅	6.0		6 0					GA	F27d
29	MA4633A,1,2	60G	80G	100G				800f∅	6 0		30					GA	F27d
30#	SFD2-328	180G						80p	6.0	$2.0,1 0V - 10V	40				1.0	Si	F27d
31#	SFD328	180G						.80p	6 0	$2.0,1 0V - 10V	40				1 5	Si	F49
32#	SV56A	40G						800f	6.0	.50-1 0Ø	60				1.0	Si	F27a
33	MA43004							850f∅	6.0	45-.85Ø	40 ∅				8 7 ∅	Si$△	F56b
34	GC5414	300G						900f	0 0	80-1 0	6 0				500m	GA	F54c
35	GC5424	300G						900f	0.0	.80-1.0	12				500m	GA	F54c
36	SD11A48							.90p	0 0	.90 - 1 8	48			9 0		Si$	P3
37	SD12A48							90p	0 0	90 - 1.8	48			9 0		Si$	F3a
38	SD22A48							.90p	0 0	.90 - 1 8	48			9 0		Si$	F11
39	SD32A48							.90p	0.0	.90 - 1 8	48			9.0		Si$	F21
40	SD42A48							90p	0.0	90 - 1 8	48			9 0		Si$	F9a
41	SDGPA48							90p	0 0	90 - 1 8	48			9 0		Si$	DO7
42#	SV214C	150G						90p	0 0	60 - 1 2Ø	6 0					GA$♦	F27a
43#	SV534C,D	200G	250G					900f	0.0	.60-1 2Ø	20					GA$§	F27a
44#	SV544C,D	200G	250G					900f	0 0	60-1 2Ø	30					GA$§	F27a
45	A900,1,2,3	50G	100G	200G	300G			900f†	6 0	.40-1.4Ø	30 ∅				300m	GA$	F27a
46	A905,6,7,8	50G	100G	200G	300G			900f†	6.0	.40-1.4Ø	50 ∅				300m	GA$	F27a
47	L8503	125						90pØ	6 0	80 - 1 6Ø	80 ∅				10	Si△$	F49c
48	MA4646C-E	150G	105G	80G				900f	6.0		6 0				.60	GA	F27f
49	MA4765							90p	6 0	60 - 1 2Ø	24				1 0	Si	F27f
50	PA0105H,J,K	100G	120G	140G				90p	6 0	75 - 1 0Ø	6 0	∅	10G		.20	Si	F27d
51	PA0705H,J,K	100G	120G	140G				.90p	6 0	.75 - 1 0Ø	6 0	∅	10G		20	Si	F9
52	XD500,1,2	60G	80G	100G	140G			.95p	0 0	50 - 1 4	6.0	∅	3 0G			GA△	F11
53	A707-3A,B,C,D,E,F	5 0G	10G	15G	20G	30G	40G	.95p	6 0	60 - 1 3Ø	24				75	Si△$	F11
54	A707-3G,H,I,J,K,L	50G	60G	70G	80G	90G	100G	95p	6.0	60 - 1.3Ø	24				75	Si△$	F11
55	A707-3M	120G						95p	6.0	.60 - 1 3Ø	24				.75	Si△$	F11
56	A707-4A,B,C,D,E,F	5 0G	10G	15G	20G	30G	40G	.95p	6 0	.60 - 1.3Ø	30				.75	Si△$	F11
57	A707-4G,H,I,J,K,L	50G	60G	70G	80G	90G	100G	95p	6.0	60 - 1 3Ø	30				75	Si△$	F11
58	A707-5A,B,C,D,E,F	5 0G	10G	15G	20G	30G	40G	95p	6 0	60 - 1.3Ø	45				75	Si△$	F11
59	A707-5G,H,I,J,K,L	50G	60G	70G	80G	90G	100G	950f	6 0	60-1.3Ø	45				750m	Si△$	F11
60	A707-6A,B,C,D,E,F	5.0G	10G	15G	20G	30G	40G	.95p	6 0	.60 - 1 3Ø	60				.75	Si△$	F11
61	A707-6G,H,I,J,K	50G	60G	70G	80G	90G		.95p	6 0	60 - 1 3Ø	60				.75	Si△$	F11
62	A707-7A,B,C,D,E,F	5 0G	10G	15G	20G	30G	40G	95p	6 0	60 - 1.3Ø	90				75	Si△$	F11
63	A707-7G,H,I	50G	60G	70G				95p	6 0	60 - 1.3Ø	90				.75	Si△$	F11
64	A707-8A,B,C,D,E,F	5 0G	10G	15G	20G	30G	40G	95p	6.0	.60 - 1.3Ø	120				75	Si△$	F11
65	A707-8G	50G						95p	6 0	60 - 1 3Ø	120				.75	Si△$	F11
66	MA4957E	150G						.95p	6 0	60 - 1 3Ø	48				1 0	Si$	F27r
67	MA4957F	150G						95p	6 0	.60 - 1 3Ø	48				1 0	Si$	S215a
68	SD11A60							96p	0 0	96 - 1 92	60			9.0		Si$	P3
69	SD12A60							96p	0 0	96 - 1 92	60			9.0		Si$	F3a
70	SD22A60							96p	0 0	96 - 1 92	60			9 0		Si$	F11
71	SD32A60							96p	0 0	.96 - 1 92	60			9 0		Si$	F21
72	SD42A60							960f	0 0	96-1 92	60			9 0		Si$	F9a
73	SDGPA60							96p	0 0	.96 - 1 92	60			9.0		Si$	DO7
74	D5147A,B	200G	250G					1 0p§∅		300-1 0	6 0 ∅				200m	GA§△	F54c
75	A600,1,2	90G	120G	150G				1.0p	0 0	45 - 1 0	8 0	∅	3 0G			GA	F11
76	A610,1,2	90G	120G	150G				1 0p	0 0	45 - 1 0	8 0	∅	3 0G			GA	F10a
77	D5940							1 0p	0 0		60 ∅	1 4kØ	50M				F27g
78	D5950							1.0p	0.0		90 ∅	1 0kØ	50M				F27g
79#	DC4202							1.0p	0.0	1 0- 30	20	150	1.0G	1.0		GA	F27ac
80	MA4034	50G						1.0p	0 0	80 - 1 2						Si	P8
81	SD11A12							1.0p	0 0	1 0 - 2.0	12			4.5		Si$	P3
82	SD11B90							1.0p	0 0	1 0 - 2.0	90			9.0		Si$	P3
83	SD11B100							1 0p	0.0	1 0 - 2 0	100			9.0		Si$	P3
84	SD12A12							1.0p	0.0	1 0 - 2 0	12			4 5		Si$	F3a
85	SD12B90							1.0p	0 0	1 0 - 2.0	90			9.0		Si$	F3a
86	SD12B100							1 0p	0 0	1.0 - 2.0	100			9.0		Si$	F3a
87	SD22A12							1 0p	0 0	1.0 - 2.0	12			4 5		Si$	F11
88	SD22B90							1 0p	0 0	1.0 - 2.0	90			9 0		Si$	F11
89	SD22B100							1 0p	0 0	1 0 - 2 0	100			9 0		Si$	F11
90	SD32A12							1.0p	0.0	1.0 - 2.0	12			4.5		Si$	F21
91	SD32B90							1 0p	0.0	1 0 - 2 0	90			9.0		Si$	F21
92	SD32B100							1 0p	0 0	1 0 - 2 0	100			9 0		Si$	F21
93	SD42A12							1 0p	0.0	1 0 - 2 0	12			4 5		Si$	F9a
94	SD42B90							1 0p	0 0	1.0 - 2 0	90			9 0		Si$	F9a
95	SD42B100							1 0p	0.0	1 0 - 2 0	100			9 0		Si$	F9a
96	SDGPA12							1 0p	0.0	1.0 - 2 0	12			4 5		Si$	DO7
97	SDGPB90							1.0p	0.0	1 0 - 2.0	90			9.0		Si$	DO7
98	SDGPB100							1.0p	0 0	1 0 - 2 0	100			9 0		Si$	DO7
99	1N5136,A							1 0p%	4 0	2.0;4 0V-60V$	60 ∅	350	50M		.40	Si	DO7
100	CV1858B							1 0p	4.0	70-1 30	60	350	100M		5 0	Si	F27x∅
101	CV1858D							1 0p	4 0	.70-1 30	60	350	100M		5 0	Si	F56n∅
102#	DC4253							1 0p	4.0		60	500	50M			Si	M524
103	E700							1 0p	4 0		60	1 2k	50M			Si	
104	GC1601	100G						1 0p§	4 0	4 4,0 0V-45V$	45 ∅	2 0k	50M				F27w
105	MC0							1.0p	4.0		60 †	10	50M			Si	A1au
106	MC200∅							1 0p	4 0		60	25	50M			Si	A1au
107	MC300							1 0p	4 0		60	50	50M			Si	A1au
108	MC400							1 0p	4 0		60 †	100	50M			Si	A1au
109	MV1858A							1 0p†	4 0	70 - 1 3Ø	60			4 5	5.0	Si	F27a
110	MV1858B							1 0p†	4 0	70 - 1 3Ø	60			4 5	5.0	Si	F10a

SYMBOLS AND CODES EXPLAINED IN INTERPRETER

10 VOLTAGE VARIABLE CAPACITORS & VARACTOR DIODES

IN ORDER OF (1) TYPICAL CAPACITANCE, (2) TEST VOLTAGE, and (3) TYPE No.

LINE No.	3 TYPE No	MINIMUM CUTOFF FREQUENCY (Corresponding to Type Numbers in previous column) (Hz)	(Hz)	(Hz)	(Hz)	(Hz)	(Hz)	TYP. CAP. 1 CAP Cj (F)	2 at TEST VOLT (V)	CAPACITANCE RANGE (for V = 0 to PIV) Ø - at TEST VOLT. (pF)	PIV (V)	Q FACTOR MIN. Q	at TEST FREQ (Hz)	MAX. SER. RES. Rs (Ω)	MAX. DISS. @ 25°C (W)	DESCRIPTION MAT.	DWG No.
1	MV1858D							1 0p†	4 0	70 - 1.3Ø	60			4 5	5 0	Si	F56e
2	PV1858D							1 0p△	4 0	2 3;4.0V-60V$	60 $	350	100M		2 0	*	F56j
3	PVM4010,A,B							1 0p%	4 0	4 50;0 0V-40V$	40 $	140	1 0G		2 0	*	F56j
4	PVM6010,A,B							1 0p%	4 0	4 90;0.0V-60V$	60 $	90	1.0G		2 0	*	F56j
5	VVC769,A,B,C,D							1.0p%	4 0		60	10	50M			Si	DO7
6	VVC770,A,B,C,D							1.0p%	4 0		60	25	50M			Si	DO7
7	VVC771,A,B,C,D							1 0p%	4.0		60	50	50M			Si	DO7
8	VVC772,A,B,C,D							1 0p%	4.0		60	100	50M			Si	DO7
9#	BXY29	90G						1 0p	6 0	.80-1 5Ø	25	☑	120G		1.0	Si#Ø	F27h
10#	SFD2-326	140G						1 0p	6.0	$2 0,1 0V - 10V	50				1.5	Si	F27d
11	SFD2-420C,D,E,F	40G	60G	80G	100G			1 0pØ	6 0		10				2 0	Si$	F27d
12	SFD2-421C,D,E,F	40G	60G	80G	100G			1 0pØ	6.0		30				2 0	Si$	F27d
13#	SFD2-421G	150G						1 0pØ	6 0		30				2 0		F27d
14	SFD2-422C,D,E,F	40G	60G	80G	100G			1 0pØ	6 0		60				2 0	Si$	F27d
15#	SFD2-422G	150G						1 0pØ	6.0		60				2 0		F27d
16	SFD2-423C,D,E,F	40G	60G	80G	100G			1 0pØ	6.0		90				2 0	Si$	F27d
17#	SFD326	140G						1 0p	6.0	$2.0;1 0V - 10V	50				2 0	Si	F49
18#	SFD421D,F,G	60G	100G	150G				1 0pØ	6 0		30				2.5	Si$	F49
19#	SFD422D,E,G	60G	80G	150G				1 0pØ	6 0		60				2 5	Si$	F49
20#	SFD423C,E,F	40G	80G	100G				1 0pØ	6 0		90				2 5	Si$	F49
21	PA0200D	60G						1 1p	0 0	40 - 2.8Ø	5 5	6.0	10G		.15	Si	F3a☑
22	MA450C							1 1p	6.0		6 0	4 0	10G			Si	P3a
23	MA460C							1.1p	6.0		6 0	4 0	10G			Si	P3a
24	MV1817B1							1.1p†☑	6 0	90 - 1.1Ø	35			.80 ☑	7 0	Si	F27n
25	PA0106H,J	100G	120G					1 1p	6.0	1 0 - 1.25Ø	6.0	☑	10G		20	Si	F27d
26	PA0706H,J	100G	120G					1 1p	6 0	1 0 - 1 25Ø	6 0	☑	10G		20	Si	F9
27	MA4534	50G						1 2p☑	0 0		3 0					Si§	F21
28	MA4540	50G						1.2p☑	0 0		3 0					Si§	F9
29	MA4547	50G						1 2p☑	0 0		3 0					Si§	F3a△
30	MA4551	175G						1 2p	0.0		5.5					Si	F21
31	PA0200E,F-H,J	70G	80G	90G	100G	120G		1 2p	0 0	40 - 2.0Ø	5 5				15	Si	F3a☑
32	SD11A18							1 2p	0 0	1 2 - 2.4	18			4.5		Si$	P3
33	SD11B120							1 2p	0 0	1 2 - 2.4	120			9 0		Si$	P3
34	SD12A18							1 2p	0.0	1.2 - 2.4	18			4 5		Si$	F3a
35	SD12B120							1 2p	0.0	1 2 - 2.4	120			9 0		Si$	F3a
36	SD22A18							1 2p	0 0	1 2 - 2 4	18			4.5		Si$	F11
37	SD22B120							1 2p	0 0	1 2 - 2.4	120			9.0		Si$	F11
38	SD32A18							1 2p	0 0	1.2 - 2 4	18			4.5		Si$	F21
39	SD32B120							1 2p	0 0	1.2 - 2.4	120			9 0		Si$	F21
40	SD42A18							1.2p	0 0	1.2 - 2.4	18			4.5		Si$	F9a
41	SD42B120							1.2p	0 0	1.2 - 2.4	120			9 0		Si$	F9a
42	SDGPA18							1 2p	0.0	1.2 - 2 4	18			4.5		Si$	DO7
43	SDGPB120							1 2p	0 0	1.2 - 2.4	120			9 0		Si$	DO7
44	DE1712A							1 2pt	4 0	.70-1.7Ø	30 ☑	1.5k	50M		4.0		F77
45	DEP1712A							1.2pt	4 0	.70-1 7Ø	30 ☑	1.5k	50M		4.0		F77
46	E1712A							1 2pt	4 0	.70-1.7	30	1.5k	50M		4.0		F10k
47	EP1712A							1.2pt	4.0	70-1 7	30	1.5k	50M		4 0		F27ac
48	GC1602	100G						1.2p§	4 0	4 5;0 0V-45V$	45 ☑	2.0k	50M				F27w
49	GC1702	60G						1 2p§	4.0	5.0;0.0V-60V$	60 ☑	1 2k	50M				F27w
50#	BSC24							1 2p	6.0		60	2 9	10G			Si	F3a
51#	DC4023A00,01,02	10G						1.2p	6.0	.80-1.6Ø	24				4.0	Si	Z53
52#	DC4023B00,01,02	10G						1.2p	6 0	.80-1.6Ø	24				4 0	Si	Z53
53#	DC4023C00,01,02	20G						1.2p	6 0	.80-1.6Ø	24				4 0	Si	Z53
54#	DC4023D00,01,02	30G						1.2p	6.0	.80-1.6Ø	24				4.0	Si	Z53
55#	DC4023E00,01,02	40G						1.2p	6.0	80-1.6Ø	24				4.0	Si	Z53
56#	DC4023F00,01,02	50G						1 2p	6.0	.80-1.6Ø	24				4.0	Si	Z53
57#	DC4023G00,01,02	60G						1.2p	6.0	.80-1.6Ø	24				4.0	Si	Z53
58#	DC4023H00,01,02	70G						1.2p	6.0	80-1.6Ø	24				4.0	Si	Z53
59#	DC4023J00,01,02	80G						1.2p	6.0	80-1.6Ø	24				4.0	Si	Z53
60#	DC4033A00,01,02	10G						1 2p	6.0	.80-1.6Ø	48				4.0	Si	Z53
61#	DC4033B00,01,02	10G						1 2p	6.0	.80-1.6Ø	48				4.0	Si	Z53
62#	DC4033C00,01,02	20G						1.2p	6.0	.80-1.6Ø	48				4 0	Si	Z53
63#	DC4033D00,01,02	30G						1.2p	6 0	.80-1.6Ø	48				4.0	Si	Z53
64#	DC4033E00,01,02	40G						1.2p	6.0	.80-1.6Ø	48				4.0	Si	Z53
65#	DC4033F00,01,02	50G						1 2p	6 0	.80-1.6Ø	48				4 0	Si	Z53
66#	DC4033G00,01,02	60G						1 2p	6.0	.80-1.6Ø	48				4.0	Si	Z53
67#	DC4033H00,01,02	70G						1.2p	6.0	.80-1.6Ø	48				4.0	Si	Z53
68#	DC4033J00,01,02	80G						1 2p	6 0	.80-1.6Ø	48				4 0	Si	Z53
69#	DC4043A00,01,02	10G						1.2p	6.0	.80-1.6Ø	60				4 0	Si	Z53
70#	DC4043B00,01,02	10G						1 2p	6.0	.80-1.6Ø	60				4 0	Si	Z53
71#	DC4043C00,01,02	20G						1 2p	6.0	.80-1.6Ø	60				4 0	Si	Z53
72#	DC4043D00,01,02	30G						1.2p	6 0	.80-1.6Ø	60				4.0	Si	Z53
73#	DC4043E00,01,02	40G						1 2p	6 0	.80-1 6Ø	60				4 0	Si	Z53
74#	DC4043F00,01,02	50G						1 2p	6 0	.80-1 6Ø	60				4.0	Si	Z53
75#	DC4043G00,01,02	60G						1 2p	6.0	.80-1 6Ø	60				4 0	Si	Z53
76#	DC4043H00,01,02	70G						1 2p	6 0	.80-1.6Ø	60				4.0	Si	Z53
77#	DC4043J00,01,02	80G						1.2p	6 0	.80-1.6Ø	60				4.0	Si	Z53
78#	DC4053A00,01,02	10G						1.2p	6.0	.80-1.6Ø	90				4.0	Si	Z53
79#	DC4053B00,01,02	10G						1 2p	6.0	.80-1 6Ø	90				4 0	Si	Z53
80#	DC4053C00,01,02	20G						1.2p	6.0	.80-1.6Ø	90				4 0	Si	Z53
81#	DC4053D00,01,02	30G						1 2p	6.0	.80-1.6Ø	90				4.0	Si	Z53
82#	DC4053E00,01,02	40G						1 2p	6.0	.80-1.6Ø	90				4.0	Si	Z53
83#	DC4053F00,01,02	50G						1 2p	6.0	.80-1 6Ø	90				4 0	Si	Z53
84#	DC4063A00,01,02	10G						1 2p	6.0	80-1 6Ø	120				4.0	Si	Z53
85#	DC4063B00,01,02	10G						1.2p	6.0	80-1.6Ø	120				4 0	Si	Z53
86#	DC4063C00,01,02	20G						1 2p	6.0	.80-1 6Ø	120				4.0	Si	Z53
87#	DC4063D00,01,02	30G						1.2p	6.0	.80-1 6Ø	120				4.0	Si	Z53
88#	DC4063E00,01,02	40G						1.2p	6.0	.80-1.6Ø	120				4 0	Si	Z53
89	MA4083							1 2p	6.0	80 - 1.6	48						F49
90	MA4084							1 2p	6 0	.80 - 1.6	48						F27d
91	MA4282							1 2p	6.0		30			20		Si	F3a
92	MA4341B,1,2	30G	70G	100G				1.2p	6.0	.80 - 1.6	6.0				30	Si	F3a
93	MA4361	175G						1 2p	6 0								
94	MA4382							1 2p	6.0								
95	MV1817A1							1.2pt☑	6.0	1.0 - 1.2Ø	35			.80 ☑	7.0	Si	F10j
96	MV1817B							1.2pt☑	6.0	.80 - 1.2Ø	35			.80 ☑	5.0	Si	F27n
97#	SV55B	40G						1.2p	6.0	80 - 1.6Ø	48				1 0	Si	F27a
98	VAB824AN20	160						1.2p△	6.0	1 0 - 1.5Ø	45					Si	F27f
99	VAB825N20	160G						1.2p△	6.0	1.0 - 1.5Ø	40				7.0	Si$	F27f
100	VAB825N26	160G						1.2p△	6.0	1 0 - 1.5Ø	40				7.0	Si$	F49b
101#	BSC12							1.2p	18		18	2.8	10G			Si	F3a
102	L8554	150						1.3pØ	6.0	1.0 - 2 0Ø	60 ☑				4.3	Si△$	F27ac
103	L8564	150						1.3pØ	6.0	1.0 - 2.0Ø	60 ☑				7.5	Si△$	F49c
104	MV1817A							1.3pt☑	6 0	.90 - 1.3Ø	35			.80 ☑	5.0	Si	F10j
105	MA43005							1.3p☑§	10	.65-1.3Ø	30 ☑				3.5 ☑	Si$△	F56b
106	MA43007							1.3p☑§	10	.80-1.3Ø	18 ☑				1.3 ☑	Si$△	F56
107#	BSC04							1.4p	0.0		4 5	8 0	10G			Si	F3a
108	SD11B24							1.4p	0.0	1.4 - 2 8	24			9.0		Si$	P3
109	SD12B24							1.4p	0.0	1.4 - 2.8	24			9.0		Si$	F3a
110	SD22B24							1.4p	0.0	1.4 - 2.8	24			9.0		Si$	F11

SYMBOLS AND CODES EXPLAINED IN INTERPRETER

10 VOLTAGE VARIABLE CAPACITORS & VARACTOR DIODES

IN ORDER OF (1) TYPICAL CAPACITANCE, (2) TEST VOLTAGE, and (3) TYPE No.

LINE No.	3 TYPE No.	MINIMUM CUTOFF FREQUENCY (Corresponding to Type Numbers in previous column) (Hz)	(Hz)	(Hz)	(Hz)	(Hz)	(Hz)	TYP. CAP. 1 CAP Cj (F)	2 at TEST VOLT (V)	CAPACITANCE RANGE (for V = 0 to PIV) Ø - at TEST VOLT. (pF)	PIV (V)	Q FACTOR MIN. Q	at TEST FREQ (Hz)	MAX. SER. RES. Rs (Ω)	MAX. DISS. @ 25°C (W)	DESCRIPTION MAT.	DWG. No.
1	SD32B24							1.4p	0 0	1.4 - 2 8	24			9 0		Si$	F21
2	SD42B24							1.4p	0.0	1 4 - 2.8	24			9 0		Si$	F9a
3	SDGPB24							1 4p.	0 0	1.4 - 2.8	24			9.0		Si$	DO7
4	D5264,A	150GØ	200G					1.5p		1 0-2.0	10 ⍁				500m	GA§Δ	F27g
5#	BSC02							1.5p	0 0		4 5	5 0	10G			Si	F3a
6▼	BV150	60G						1.5p	1.0	1 0-4 1	30				250m		
7#	DC4254							1.5p	4 0		60	500	50M			Si	M524
8	E701							1.5p	4.0		60	1 2k	50M			Si	
9	GC1603	100G						1.5p§	4 0	4 8;0 0V-45V$	45 ⍁	2 0k	50M				F27w
10	GC1703	60G						1.5p§	4 0	5 3;0.0V-60V$	60 ⍁	1 2k	50M				F27w
11	MC1							1.5p	4.0		60 †	10	50M			Si	A1au
12	MC201⍁							1.5p	4.0		60	25	50M			Si	A1au
13	MC301							1.5p	4.0		60	50	50M			Si	A1au
14	MC401							1 5p	4 0		60 †	100	50M			Si	A1au
15	VVC773,A,B,C,D							1.5p%	4 0		60	10	50M			Si	DO7
16	VVC774,A,B,C,D							1 5p%	4 0		60	25	50M			Si	DO7
17	VVC775,A,B,C,D							1.5p%	4.0		60	50	50M			Si	DO7
18	VVC776,A,B,C,D							1.5p%	4 0		60	100	50M			Si	DO7
19#	1S1563	40G						1 5p	6.0	1 0-2 0Ø	60				2 4	Si$#	F49d
20#	1S1573	40G						1.5p	6 0	1 0-2 0Ø	60				800m	Si$#	F27ad
21	A28	80G						1 5p†	6 0	1 0-2 5Ø	45	⍁	1 0G	900k⍁	3 5 §⍁	Si#$	F27h
22	A708-3A,B,C,D,E,F	5 0G	10G	15G	20G	30G	40G	1 5p	6 0	1 0 - 2.1Ø	24				1 0	Si△$	F11
23	A708-3G,H,I,J,K	50G	60G	70G	80G	90G		1.5p	6.0	1 0 - 2.1Ø	24				1 0	Si△$	F11
24	A708-4A,B,C,D,E,F	5 0G	10G	15G	20G	30G	40G	1 5p	6.0	1 0 - 2 1Ø	30				1 0	Si△$	F11
25	A708-4G,H,I,J	50G	60G	70G	80G			1 5p	6.0	1 0 - 2 1Ø	30				1 0	Si△$	F11
26	A708-5A,B,C,D,E,F	5.0G	10G	15G	20G	30G	40G	1 5p	6.0	1.0 - 2 1Ø	45				1 0	Si△$	F11
27	A708-5G,H,I,J	50G	60G	70G	80G			1.5p	6.0	1.0 - 2 1Ø	45				1 0	Si△$	F11
28	A708-6A,B,C,D,E,F	5 0G	10G	15G	20G	30G	40G	1 5p	6 0	1 0 - 2.1Ø	60				1 0	Si△$	F11
29	A708-6G,H,I	50G	60G	70G				1.5p	6.0	1 0 - 2 1Ø	60				1 0	Si△$	F11
30	A708-7A,B,C,D,E,F	5 0G	10G	15G	20G	30G	40G	1.5p	6.0	1.0 - 2.1Ø	90				1 0	Si△$	F11
31	A708-7G	50G						1 5p	6 0	1 0 - 2 1Ø	90				1 0	Si△$	F11
32	A708-8A,B,C,D,E,F	5.0G	10G	15G	20G	30G	40G	1.5p	6 0	1 0 - 2 1Ø	120				1 0	Si△$	F11
33	B006010D,E,F,G	40G	60G	80G	100G			1 5p	6.0	1 0 - 2.0Ø	6 0				30	Si	F27k
34	B015010D,E,F,G	40G	60G	80G	100G			1 5p	6 0	1 0 - 2 0Ø	15				70	Si	F27k
35	B024010C,D,E,F	20G	40G	60G	80G			1 5p	6 0	1 0 - 2 0Ø	24				90	Si	F27k
36	B030010C,D,E,F	20G	40G	60G	80G			1.5p	6 0	1 0 - 2.0Ø	30				1 0	Si	F27k
37	B045010B,C,D,E,F	10G	20G	40G	60G	80G		1.5p	6.0	1 0-2 0Ø	45				1 4	Si	F27k
38	B060010A,B,C,D,E	5.0G	10G	20G	40G	60G		1 5p	6 0	1 0-2 0Ø	60				1 6	Si	F27k
39	B090010A,B,C,D	5G	10G	20G	40G			1 5p	6 0	1.0 - 2 0Ø	90				2 0	Si	F27k
40#	BXY28	80G						1 5p	6.0	1 0 - 10	45			90 ⍁	3 5	Si#$	F27h
41	C006010D,E,F,G	40G	60G	80G	100G			1.5p	6.0	1 0 - 2 0Ø	6 0				1 5	Si	F49
42	C015010D,E,F,G	40G	60G	80G	100G			1.5p	6.0	1 0 - 2.0Ø	15				1 7	Si	F49
43	C024010C,D,E,F	20G	40G	60G	80G			1.5p	6.0	1 0 - 2.0Ø	24				1 8	Si	F49
44	C030010C,D,E,F	20G	40G	60G	80G			1.5p	6.0	1 0 - 2 0Ø	30				1 9	Si	F49
45	C045010B,C,D,E,F	10	20	40	60	80		1 5p	6.0	1 0-2 0Ø	45				2 0	Si	F49
46	C060010A,B,C,D,E	5 0	10	20	40	60		1.5p	6.0	1.0-2.0Ø	60				2 1	Si	F49
47	C090010A,B,C,D	5G	10G	20G	40G			1.5p	6.0	1 0 - 2 0Ø	90				2 5	Si	F49
48	MA450B							1 5p	6.0		6 0	3 0	10G			Si	P3aΔ
49	MA460B							1 5p	6.0		6 0	3 0	10G			Si	P3Δ
50	MA4764							1 5p	6 0	1.0 - 2.0Ø	40				2 0	Si	F27f
51	P006010D,E,F,G	40G	60G	80G	100G			1 5p	6.0	1.0 - 2 0Ø	6 0				30	Si	F27ad
52	P015010D,E,F,G	40G	60G	80G	100G			1 5p	6 0	1 0 - 2 0Ø	15				70	Si	F27ad
53	P024010C,D,E,F	20G	40G	60G	80G			1 5p	6 0	1.0 - 2.0Ø	24				90	Si	F27ad
54	P030010C,D,E,F	20G	40G	60G	80G			1 5p	6.0	1 0 - 2 0Ø	30				1 0	Si	F27ad
55	P045010B,C-F	10G	20G	40G	60G	80G		1 5p	6 0	1 0 - 2 0Ø	45				1 4	Si	F27ad
56	P060010A,B-E	5 0G	10G	20G	40G	60G		1 5p	6 0	1 0 - 2 0Ø	60				1 6	Si	F27ad
57	P090010A,B,C,D	5G	10G	20G	40G			1 5p	6 0	1 0 - 2 0Ø	90				2 0	Si	F27ad
58	PH1202-1,2,3,4		5 0G	10G	15G	20G		1 5p	6.0	1 0 - 2 0Ø	6 0	⍁	10G			Si$	F58
59	PH1202A,B-F	30G	40G	50G	60G	70G	80G	1 5p	6.0	1.0-2 0Ø	6 0	⍁	10G			Si$	F58
60	PH1202G,H,J-L	90G	100G	120G	140G	160G		1 5p	6 0	1 0-2 0Ø	6 0	⍁	10G			Si$	F58
61	PH1202N	180G						1 5p	6.0	1 0-2 0Ø	6 0	⍁	10G			Si$	F58
62	PH1212-1,2,3,4		5 0G	10G	15G	20G		1 5p	6.0	1 0 - 2 0Ø	15	⍁	10G			Si$	F58
63	PH1212A,B-F	30G	40G	50G	60G	70G	80G	1 5p	6 0	1 0-2.0Ø	15	⍁	10G			Si$	F58
64	PH1212G,H,J-L	90G	100G	120G	140G	160G		1 5p	6 0	1 0-2.0Ø	15	⍁	10G			Si$	F58
65	PH1212N	180G						1 5p	6.0	1 0-2 0Ø	15	⍁	10G			Si$	F58
66	PH1222-1,2,3,4		5 0G	10G	15G	20G		1 5p	6 0	1 0 - 2 0Ø	24	⍁	10G			Si$	F58
67	PH1222A,B-F	30G	40G	50G	60G	70G	80G	1 5p	6 0	1 0-2 0Ø	24	⍁	10G			Si$	F58
68	PH1222G,H,J	90G	100G	120G				1 5p	6 0	1 0-2 0Ø	24	⍁	10G			Si$	F58
69	PH1232-1,2,3,4		5 0G	10G	15G	20G		1 5p	6 0	1 0 - 2 0Ø	30	⍁	10G			Si$	F58
70	PH1232A,B-F	30G	40G	50G	60G	70G	80G	1 5p	6 0	1 0-2 0Ø	30	⍁	10G			Si$	F58
71	PH1232G,H	90G	100G					1 5p	6 0	1 0-2 0Ø	30	⍁	10G			Si$	F58
72	PH1242-1,2,3,4		5 0G	10G	15G	20G		1 5p	6 0	1 0 - 2 0Ø	45	⍁	10G			Si$	F58
73	PH1242A,B-F	30G	40G	50G	60G	70G	80G	1 5p	6 0	1 0-2 0Ø	45	⍁	10G			Si$	F58
74	PH1242G,H	90G	100G					1 5p	6 0	1 0-2 0Ø	45	⍁	10G			Si$	F58
75	PH1252-1,2,3,4		5.0G	10G	15G	20G		1.5p	6 0	1 0 - 2 0Ø	60	⍁	10G			Si$	F58
76	PH1252A,B-F	30G	40G	50G	60G	70G	80G	1 5p	6 0	1 0-2 0Ø	60	⍁	10G			Si$	F58
77	PH1252G	90G						1.5p	6.0	1 0-2 0Ø	60	⍁	10G			Si$	F58
78	PH1262-1,2,3,4		5.0G	10G	15G	20G		1 5p	6.0	1 0 - 2 0Ø	90	⍁	10G			Si$	F58
79	PH1262A,B-E	30G	40G	50G	60G	70G		1.5p	6 0	1.0-2 0Ø	90	⍁	10G			Si$	F58
80	PH1272-1,2,3,4		5 0G	10G	15G	20G		1 5p	6 0	1 0 - 2 0Ø 120		⍁	10G			Si$	F58
81	PH1272A,B-D	30G	40G	50G	60G			1 5p	6 0	1.0-2.0Ø	120	⍁	10G			Si$	F58
82	PH1282-1,2,3,4		5 0G	10G	15G	20G		1 5p	6 0	1.0 - 2 0Ø	150	⍁	10G			Si$	F58
83	PH1282A,B	30G	40G					1.5p	6 0	1.0-2 0Ø	150	⍁	10G			Si$	F58
84	PH1292-1,2,3,4		5 0G	10G	15G	20G		1 5p	6 0	1.0 - 2 0Ø	200	⍁	10G			Si$	F58
85	PL0102-1,2,3,4		5 0G	10G	15G	20G		1 5p	6 0	1 0 - 2 0Ø	6 0	⍁	10G			Si	F27d
86	PL0102A,B-F	30G	40G	50G	60G	70G	80G	1 5p	6 0	1 0-2 0Ø	6 0	⍁	10G			Si	F27d
87	PL0102G,H,J-L	90G	100G	120G	140G	160G		1 5p	6 0	1.0-2 0Ø	6 0	⍁	10G			Si	F27d
88	PL0102N	180G						1 5p	6 0	1 0-2 0Ø	6 0	⍁	10G			Si	F27d
89	PL0112-1,2,3,4		5.0G	10G	15G	20G		1 5p	6 0	1 0 - 2 0Ø	15	⍁	10G			Si	F27d
90	PL0112A,B-F	30G	40G	50G	60G	70G	80G	1 5p	6 0	1 0-2 0Ø	15	⍁	10G			Si	F27d
91	PL0112G,H,J-L	90G	100G	120G	140G	160G		1 5p	6.0	1 0-2 0Ø	15	⍁	10G			Si	F27d
92	PL0112N	180G						1 5p	6 0	1 0-2 0Ø	15	⍁	10G			Si	F27d
93	PL0122-1,2,3,4		5 0G	10G	15G	20G		1 5p	6 0	1 0 - 2 0Ø	24	⍁	10G			Si	F27d
94	PL0122A,B-F	30G	40G	50G	60G	70G	80G	1 5p	6.0	1 0-2.0Ø	24	⍁	10G			Si	F27d
95	PL0122G,H,J	90G	100G	120G				1 5p	6 0	1.0-2 0Ø	24	⍁	10G			Si	F27d
96	PL0132-1,2,3,4		5 0G	10G	15G	20G		1.5p	6.0	1 0 - 2 0Ø	30	⍁	10G			Si	F27d
97	PL0132A,B-F	30G	40G	50G	60G	70G	80G	1 5p	6.0	1 0-2 0Ø	30	⍁	10G			Si	F27d
98	PL0132G,H	90G	100G					1.5p	6 0	1 0-2 0Ø	30	⍁	10G			Si	F27d
99	PL0142-1,2,3,4		5 0G	10G	15G	20G		1 5p	6 0	1 0 - 2 0Ø	45	⍁	10G			Si	F27d
100	PL0142A,B-F	30G	40G	50G	60G	70G	80G	1 5p	6 0	1 0-2 0Ø	45	⍁	10G			Si	F27d
101	PL0142G,H	90G	100G					1 5p	6 0	1.0-2 0Ø	45	⍁	10G			Si	F27d
102	PL0152-1,2,3,4		5 0G	10G	15G	20G		1.5p	6 0	1 0 - 2 0Ø	60	⍁	10G			Si	F27d
103	PL0152A,B-F	30G	40G	50G	60G	70G	80G	1 5p	6 0	1 0-2 0Ø	60	⍁	10G			Si	F27d
104	PL0152G	90G						1 5p	6 0	1 0-2 0Ø	60	⍁	10G			Si	F27d
105	PL0162-1,2,3,4		5 0G	10G	15G	20G		1 5p	6 0	1 0 - 2 0Ø	90	⍁	10G			Si	F27d
106	PL0162A,B-E	30G	40G	50G	60G	70G		1 5p	6.0	1 0-2.0Ø	90	⍁	10G			Si	F27d
107	PL0172-1,2,3,4		5 0G	10G	15G	20G		1.5p	6.0	1 0 - 2 0Ø	120	⍁	10G			Si	F27d
108	PL0172A,B-D	30G	40G	50G	60G			1 5p	6 0	1.0-2 0Ø	120	⍁	10G			Si	F27d
109	PL0182-1,2,3,4		5 0G	10G	15G	20G		1.5p	6 0	1 0 - 2 0Ø	150	⍁	10G			Si	F27d
110	PL0182A,B	30G	40G					1.5p	6 0	1.0-2 0Ø	150	⍁	10G			Si	F27d

SYMBOLS AND CODES EXPLAINED IN INTERPRETER

10 VOLTAGE VARIABLE CAPACITORS & VARACTOR DIODES

IN ORDER OF (1) TYPICAL CAPACITANCE, (2) TEST VOLTAGE, and (3) TYPE No.

LINE No.	3 TYPE No	MINIMUM CUTOFF FREQUENCY (Corresponding to Type Numbers in previous column) (Hz)	(Hz)	(Hz)	(Hz)	(Hz)	(Hz)	TYP. CAP. 1 CAP Cj (F)	2 at TEST VOLT (V)	CAPACITANCE RANGE (for V = 0 to PIV) Ø - at TEST VOLT. (pF)	PIV (V)	Q FACTOR MIN Q	at TEST FREQ (Hz)	MAX. SER. RES. Rs (Ω)	MAX. DISS @ 25°C (W)	DESCRIPTION MAT.	DWG No.
1	PL0502-1,2,3,4		5 0G	10G	15G	20G		1 5p	6.0	1.0 - 2.0Ø	6 0	☑	10G			Si	F10p
2	PL0502A,B-F	30G	40G	50G	60G	70G	80G	1 5p	6 0	1 0-2 0Ø	6 0	☑	10G			Si	F10p
3	PL0502G,H,J-L	90G	100G	120G	140G	160G		1.5p	6.0	1 0-2 0Ø	6.0	☑	10G			Si	F10p
4	PL0502N	180G						1 5p	6 0	1.0-2.0Ø	6 0	☑	10G			Si	F10p
5	PL0512-1,2,3,4		5 0G	10G	15G	20G		1 5p	6 0	1.0 - 2.0Ø	15	☑	10G			Si	F10p
6	PL0512A,B-F	30G	40G	50G	60G	70G	80G	1.5p	6 0	1 0-2.0Ø	15	☑	10G			Si	F10p
7	PL0512G,H,J-L	90G	100G	120G	140G	160G		1 5p	6.0	1 0-2.0Ø	15	☑	10G			Si	F10p
8	PL0512N	180G						1 5p	6 0	1 0-2.0Ø	15	☑	10G			Si	F10p
9	PL0522-1,2,3,4		5 0G	10G	15G	20G		1.5p	6.0	1.0 - 2.0Ø	24	☑	10G			Si	F10p
10	PL0522A,B-F	30G	40G	50G	60G	70G	80G	1 5p	6 0	1.0-2.0Ø	24	☑	10G			Si	F10p
11	PL0522G,H,J	90G	100G	120G				1 5p	6 0	1 0-2.0Ø	24	☑	10G			Si	F10p
12	PL0532-1,2,3,4		5.0G	10G	15G	20G		1 5p	6 0	1 0 - 2 0Ø	30	☑	10G			Si	F10p
13	PL0532A,B-F	30G	40G	50G	60G	70G	80G	1.5p	6 0	1.0-2.0Ø	30	☑	10G			Si	F10p
14	PL0532G,H	90G	100G					1 5p	6 0	1.0-2 0Ø	30	☑	10G			Si	F10p
15	PL0542-1,2,3,4		5 0G	10G	15G	20G		1 5p	6.0	1.0 - 2 0Ø	45	☑	10G			Si	F10p
16	PL0542A,B-F	30G	40G	50G	60G	70G	80G	1.5p	6 0	1.0-2.0Ø	45	☑	10G			Si	F10p
17	PL0542G,H	90G	100G					1 5p	6 0	1 0-2.0Ø	45	☑	10G			Si	F10p
18	PL0552-1,2,3,4		5 0G	10G	15G	20G		1.5p	6 0	1.0 - 2.0Ø	60	☑	10G			Si	F10p
19	PL0552A,B-F	30G	40G	50G	60G	70G	80G	1 5p	6 0	1.0-2.0Ø	60	☑	10G			Si	F10p
20	PL0552G	90G						1 5p	6 0	1.0-2.0Ø	60	☑	10G			Si	F10p
21	PL0562-1,2,3,4		5 0G	10G	15G	20G		1 5p	6 0	1.0 - 2 0Ø	90	☑	10G			Si	F10p
22	PL0562A,B-E	30G	40G	50G	60G	70G		1 5p	6 0	1 0-2.0Ø	90	☑	10G			Si	F10p
23	PL0572-1,2,3,4		5 0G	10G	15G	20G		1 5p	6 0	1.0 - 2.0Ø	120	☑	10G			Si	F10p
24	PL0572A,B-D	30G	40G	50G	60G			1 5p	6 0	1 0-2.0Ø	120	☑	10G			Si	F10p
25	PL0582-1,2,3,4		5 0G	10G	15G	20G		1 5p	6.0	1 0 - 2 0Ø	150	☑	10G			Si	F10p
26	PL0582A,B	30G	40G					1 5p	6.0	1.0-2.0Ø	150	☑	10G			Si	F10p
27	PL0592-1,2,3,4		5 0G	10G	15G	20G		1.5p	6.0	1.0 - 2.0Ø	200	☑	10G			Si	F10p
28#	SV56B	30G						1 5p	6.0	1 0 - 2 0Ø	60				1 0	Si	F27a
29#	SV66B	60GØ						1 5p	6.0	1.0-2 0	60					Si#$	S250c
30	SD11B6							1 6p	0 0	1 6 - 3 2	6 0			2.6		Si	P3
31	SD12B6							1 6p	0.0	1 6 - 3.2	6.0			2.6		Si	F3a
32	SD22B6							1 6p	0 0	1 6 - 3 2	6 0			2.6		Si	F11
33	SD32B6							1 6p	0.0	1 6 - 3.2	6.0			2.6		Si	F21
34	SD42B6							1 6p	0 0	1 6 - 3.2	6 0			2.6		Si	F9a
35	SDGPB6							1 6p	0 0	1 6 - 3 2	6 0			2.6		Si	DO7
36#	ZC31	125G						1 6p	0.0	1 1-2 2†	6.0				100m	Si	Z60
37	MA4283	10G						1 6p	6.0		30			14		Si	F3a
38	MA4383	10G						1 6p	6 0		30			14		Si	A31e
39	1N5154							1 7p		.70 - 2.7Ø	35 ☑			2.0	5 0	Si	F10g
40	1N5155							1 7p		70 - 2 7Ø	35 ☑			2.0	5.0	Si	F27e
41	D5265,A	150G	200G					1 8p	0.0	1 2 - 2.4Ø	18 ☑				50	GA§$Δ	F27d
42	SD11B48							1 8p	0 0	1 8 - 3 6	48			4 5		Si	P3
43	SD12B48							1 8p	0.0	1.8 - 3.6	48			4 5		Si	F3a
44	SD22B48							1 8p	0 0	1.8 - 3.6	48			4.5		Si	F11
45	SD32B48							1.8p	0.0	1 8 - 3 6	48			4 5		Si	F21
46	SD42B48							1 8p	0.0	1 8 - 3.6	48			4.5		Si	F9a
47	SDGPB48							1 8p	0.0	1.8 - 3.6	48			4.5		Si	DO7
48	GC1604	100G						1.8p§	4 0	4 9,0 0V-45V$	45 ☑	2.0k	50M				F27w
49	GC1704	60G						1.8p§	4.0	5.5;0.0V-60V$	60 ☑	1 2k	50M				F27w
50	SQ1213A,B,C							1 8p§%	4.0		30 ☑	1.5k	50M		250m	Si#$	A1ah
51	SQ1263A,B,C							1.8p§%	4.0		30 ☑	750	50M		250m	Si#$	A1ah
52	MA4256							1.8p	6 0	1.2-2.5	6.0	5.0	10G			SiΔ	F9
53	MA4956C	100G						1 8p	6.0	1 2-2 5Ø	60				2.5	Si$	F49a
54	MA4956E	100G						1.8p	6 0	1.2-2 5Ø	60				2 5	Si$	F27r
55	MA4956F	100G						1 8p	6.0	1 2-2 5Ø	60				2.5	Si$	S215a
56	SD11B60							1 9p	0.0	1 92-3.8	60					Si	P3
57	SD12B60							1 9p	0.0	1.92-3 8	60			4 5		Si	F3a
58	SD22B60							1 9p	0.0	1 92-3.8	60			4 5		Si	F11
59	SD32B60							1 9p	0.0	1 92-3 8	60			4 5		Si	F21
60	SD42B60							1.9p	0.0	1.92-3.8	60			4.5		Si	F9a
61	SDGPB60							1 9p	0 0	1 92-3 8	60			4.5		Si	DO7
62#	1S362,3	70G	90G					2.0p☑			5 0				200m	Si§	F3a
63	1N3770	140G						2.0p☑	0.0		5.5					Si	F9
64#	BSC551							2.0p☑	0.0		5.5	17 5	10G			Si	F21
65#	BSC552							2 0p☑	0 0		5.5	14	10G			Si	F21
66#	BSC553							2.0p☑	0.0		5.5	12	10G			Si	F21
67#	BSC554							2.0p☑	0 0		5.5	10	10G			Si	F21
68#	BSC555							2.0p☑	0.0		5.5	6 0	10G			Si	F21
69	D5940A							2.0p	0.0		60 ☑	1.4kØ	50M				F27g
70	D5950A							2.0p	0 0		90 ☑	1.0kØ	50M				F27g
71#	DC4201							2.0p	0.0	2 0- 55	20	150	1.0G	1.0		GA	F27ac
72	MA4253							2 0p	0.0		5 5		120G			Si§	F9
73	MA4254							2 0p	0 0		5 5		100G			Si§	F9
74	MA4296	120G						2 0p	0 0			10	120G			Si	P3
75	MA4297	120G						2.0p	0.0							Si	F3a
76	MA4298	140G						2.0p	0 0			10	150G			Si	P3
77	MA4552							2 0p	0 0		5.5	14	10G			Si§	F21
78	MA4553							2.0p	0.0		5.5	12	10G			Si§	F21
79	MA4554							2 0p	0.0		5.5	10	10G			Si§	F21
80	MA4555							2 0p	0 0		5.5	6 0	10G			Si§	F21
81	SD11-1	10G						2.0p	0 0	2.0 - 16	6.0	1 0	10G		.30	Si	P3
82	SD11-2	20G						2.0p	0 0	2.0 - 4.0	6 0	2 0	10G		30	Si	P3
83	SD11B12							2 0p	0 0	2 0 - 4.0	12			2.6		Si	P3
84	SD11C90							2.0p	0.0	2 0 - 4.0	90			4.5		Si	P3
85	SD11C100							2.0p	0.0	2 0 - 4 0	100			4.5		Si	P3
86	SD12-1	10G						2 0p	0 0	2.0 - 16	6.0	1 0	10G		.30	Si	F3a
87	SD12-2	20G						2.0p	0.0	2.0 - 4 0	6.0	2.0	10G		.30	Si	F3a
88	SD12B12							2.0p	0.0	2 0 - 4.0	12			2 6		Si	F3a
89	SD12C90							2 0p	0.0	2 0 - 4 0	90			4.5		Si	F3a
90	SD12C100							2.0p	0.0	2.0 - 4 0	100			4.5		Si	F3a
91	SD22-1	10G						2 0p	0.0	2 0 - 16	6 0	1 0	10G		30	Si	F11
92	SD22-2	20G						2 0p	0.0	2 0 - 4 0	6.0	2 0	10G		30	Si	F11
93	SD22B12							2.0p	0.0	2.0 - 4.0	12			2 6		Si	F11
94	SD22C90							2 0p	0.0	2.0 - 4.0	90			4 5		Si	F11
95	SD22C100							2 0p	0 0	2 0 - 4 0	100			4.5		Si	F11
96	SD32-1	10G						2.0p	0.0	2.0 - 16	6.0	1 0	10G		.30	Si	F21
97	SD32-2	20G						2 0p	0 0	2.0 - 4 0	6 0	2 0	10G		.30	Si	F21
98	SD32B12							2.0p	0 0	2.0 - 4.0	12			2.6		Si	F21
99	SD32C90							2 0p	0.0	2 0 - 4.0	90			4 5		Si	F21
100	SD32C100							2 0p	0 0	2 0 - 4.0	100			4 5		Si	F21
101	SD42-1	10G						2 0p	0.0	2.0 - 16	6 0	1 1	10G		.30	Si	F9a
102	SD42-2	20G						2.0p	0.0	2.0 - 4.0	6 0	2 0	10G		.30	Si	F9a
103	SD42B12							2 0p	0 0	2 0 - 4.0	12			2.6		Si	F9a
104	SD42C90							2 0p	0 0	2.0 - 4 0	90			4 5		Si	F9a
105	SD42C100							2.0p	0.0	2.0 - 4.0	100			4 5		Si	F9a
106	SDGPB12							2 0p	0.0	2.0 - 4.0	12			2 6		Si	DO7
107	SDGPC90							2 0p	0 0	2.0 - 4.0	90			4 5		Si	DO7
108	SDGPC100							2.0p	0.0	2.0 - 4 0	100			4 5		Si	DO7
109	L8504	75						2 0pØ	6.0	1.6 - 3.0Ø	120 ☑				20	SiΔ$	F49c
110	MS3150,1-5	10G	20G	40G	60G	80G	100G	2.0p	6.0	1.1 - 3 0	30				50	GA	P3

SYMBOLS AND CODES EXPLAINED IN INTERPRETER

10 VOLTAGE VARIABLE CAPACITORS & VARACTOR DIODES

IN ORDER OF (1) TYPICAL CAPACITANCE, (2) TEST VOLTAGE, and (3) TYPE No.

LINE No.	3 TYPE No.	MINIMUM CUTOFF FREQUENCY (Corresponding to Type Numbers in previous column) (Hz)	(Hz)	(Hz)	(Hz)	(Hz)	(Hz)	TYP. CAP. 1 CAP. Cj (F)	2 at TEST VOLT (V)	CAPACITANCE RANGE (for V = 0 to PIV) Ø - at TEST VOLT. (pF)	PIV (V)	Q FACTOR MIN. Q	at TEST FREQ (Hz)	MAX. SER. RES. Rs (Ω)	MAX. DISS. @ 25°C (W)	DESCRIPTION MAT.	DWG. No.
1	MS3170,1-5	10G	20G	40G	60G	80G	100G	2.0p	6.0	1.1 - 3.0	45				.50	GA	P3
2	MS3210,1-4	10G	20G	40G	60G	80G		2.0p	6.0	1.1 - 3.0	60				.50	GA	P3
3	MS3260,1-5	10G	20G	40G	60G	80G	100G	2.0p	6.0	1.1 - 3.0	18				.50	GA	P3
4	MS4160,1-5	10G	20G	40G	60G	80G	100G	2.0p	6.0	1.1 - 3.0Ø	18	☑	10G		.50	GA	F27d
5	MS4210,1-5	10G	20G	40G	60G	80G	100G	2.0p	6.0	1.1 - 3.0Ø	30	☑	10G		50	GA	F27d
6	MS4260,1-5	10G	20G	40G	60G	80G	100G	2.0p	6.0	1.1 - 3.0Ø	45	☑	10G		.50	GA	F27d
7	MS4310,11-14	10G	20G	40G	60G	80G		2.0p	6.0	1.1 - 3.0Ø	60	☑	10G		50	GA	F27d
8▼#	S3028	45G						2.0p	6.0	2.25;0-45▼$	50 ☑	☑	10G	2.0	2.0	Si	F27e
9#	SFD2-324	80G						2.0p	6.0	$2.0;1.0V - 10V	70				2.5	Si	F27d
10	SFD2-430A,B,C,D	10G	20G	40G	60G			2.0pØ	6.0		10				2.0	Si$	F27d
11	SFD2-431A,B,C,D	10G	20G	40G	60G			2.0pØ	6.0		30				2.0	Si$	F27d
12	SFD2-432A,B,C,D	10G	20G	40G	60G			2.0pØ	6.0		60				2.0	Si$	F27d
13	SFD2-433A,B,C,D	10G	20G	40G	60G			2.0pØ	6.0		90				2.0	Si$	F27d
14#	SFD324	80G						2.0p	6.0	$2.0;1.0V - 10V	70				3.5	Si	F49
15#	SFD432B,C,D	20G	40G	60G				2.0pØ	6.0		60				3.7	Si$	F49
16#	SFD433B,C,D	20G	40G	60G				2.0pØ	6.0		90				3.7	Si$	F49
17#	SV264B							2.0p	6.0	1.0-3.0Ø	90				11	Si	S250c
18	VAB804N20,N26,N28	150						2.0pΔ	6.0	1.5-2.5Ø	80					Si	Z42
19	VAB814AN20,AN26	140G						2.0pΔ	6.0	1.5-2.5	60				7.5	Si$	Z42
20	VAB814N20,N26,N28		150					2.0pΔ	6.0	1.5-2.5Ø	60					Si	Z42
21	MA450A							2.1p	6.0		6.0	2.0	10G			Si	P3aΔ
22	MA460A							2.1p	6.0		6.0	2.0	10G			Si	P3Δ
23	PA0200C	50G						2.2p	0.0	80 - 3.6Ø	5.5	5.0	10G		15	Si	F3a☑
24	CV1860B							2.2p	4.0	1.76-2.64	60	350	100M		5.0	Si	F27x☑
25	CV1860D							2.2p	4.0	1.76-2.64	60	350	100M		5.0	Si	F56n☑
26#	DC4255							2.2p	4.0		60	500	50M			Si	M524
27	DE1714A							2.2p†	4.0	1.7-2.7Ø	30 ☑	1.4k	50M		4.0		F77
28	DEP1714A							2.2p†	4.0	1.7-2.7Ø	30 ☑	1.4k	50M		4.0		F77
29	E602							2.2p	4.0		60	500	50M			Si	
30	E702							2.2p	4.0		60	1.2k	50M			Si	
31	E1714A							2.2p†	4.0	1.7-2.7	30	1.4k	50M		4.0		F10k
32	EP1714A							2.2p†	4.0	1.7-2.7	30	1.4k	50M		4.0		F27ac
33	GC1605	100G						2.2p§	4.0	5.0,0.0V-45V$	45 ☑	2.0k	50M				F27w
34	GC1705	60G						2.2p§	4.0	5.8,0.0V-60V$	60 ☑	1.2k	50M				F27w
35	MC2Δ							2.2p	4.0		60 †	10	50M			Si	A1au
36	MC202☑							2.2p	4.0		60	25	50M			Si	A1au
37	MC302							2.2p	4.0		60	50	50M			Si	A1au
38	MC402							2.2p	4.0		60 †	100	50M			Si	A1au
39	MV1860A							2.2p†	4.0	1.76 - 2.64Ø	60			2.1	5.0	Si	F27a
40	MV1860B							2.2p†	4.0	1.76 - 2.64Ø	60			2.1	5.0	Si	F10a
41	MV1860D							2.2p†	4.0	1.76 - 2.64Ø	60			2.1	5.0	Si	F56e
42	PV1860D							2.2pΔ	4.0	2.7,4.0V-60V$	60 $	350	100M		2.0	*	F56j
43	PVM4022,A,B							2.2p%	4.0	6.00;0.0V-40V$	40 $	130	1.0G		2.0	*	F56j
44	PVM6022,A,B							2.2p%	4.0	6.90;0.0V-60V$	60 $	85	1.0G		2.0	*	F56j
45	SQ1214A,B,C							2.2p§%	4.0		30 ☑	1.4k	50M		250m	Si#$	A1ah
46	SQ1264A,B,C							2.2p§%	4.0		30 ☑	700	50M		250m	Si#$	A1ah
47	VVC777,A,B,C,D							2.2p%	4.0		60	10	50M			Si	DO7
48	VVC778,A,B,C,D							2.2p%	4.0		60	50	50M			Si	DO7
49	VVC779,A,B,C,D							2.2p%	4.0		60	100	50M			Si	DO7
50	VVC788,A,B,C,D							2.2p%	4.0		60	25	50M			Si	DO7
51	VVC1001,A,B,C,D							2.2p%	4.0		60	100	50M			Si	DO7
52▼	GC3305	140G						2.2p	6.0	1.5-3.0Ø	100				13	Si	F78a
53#	SV55C	30G						2.2p	6.0	1.6 - 3.0Ø	48				1.0	Si	F27a
54#	BB105B							2.2p	25	2.0 - 2.3Ø	28			70		Si	A246
55	MA4684	35G						2.3p	0.0	1.8 - 2.8Ø	8.0			80		Si	S215
56#	DC4034A00,01,02	10G						2.3p	6.0	1.6-3.0Ø	48				4.0	Si	Z53
57#	DC4034B00,01,02	10G						2.3p	6.0	1.6-3.0Ø	48				4.0	Si	Z53
58#	DC4034C00,01,02	20G						2.3p	6.0	1.6-3.0Ø	48				4.0	Si	Z53
59#	DC4034D00,01,02	30G						2.3p	6.0	1.6-3.0Ø	48				4.0	Si	Z53
60#	DC4034E00,01,02	40G						2.3p	6.0	1.6-3.0Ø	48				4.0	Si	Z53
61#	DC4044A00,01,02	10G						2.3p	6.0	1.6-3.0Ø	60				4.0	Si	Z53
62#	DC4044B00,01,02	10G						2.3p	6.0	1.6-3.0Ø	60				4.0	Si	Z53
63#	DC4044C00,01,02	20G						2.3p	6.0	1.6-3.0Ø	60				4.0	Si	Z53
64#	DC4044D00,01,02	30G						2.3p	6.0	1.6-3.0Ø	60				4.0	Si	Z53
65#	DC4054A00,01,02	10G						2.3p	6.0	1.6-3.0Ø	90				4.0	Si	Z53
66#	DC4054B00,01,02	10G						2.3p	6.0	1.6-3.0Ø	90				4.0	Si	Z53
67#	DC4054C00,01,02	20G						2.3p	6.0	1.6-3.0Ø	90				4.0	Si	Z53
68#	DC4054D00,01,02	30G						2.3p	6.0	1.6-3.0Ø	90				4.0	Si	Z53
69#	DC4064A00,01,02	10G						2.3p	6.0	1.6-3.0Ø	120				4.0	Si	Z53
70#	DC4064B00,01,02	10G						2.3p	6.0	1.6-3.0Ø	120				4.0	Si	Z53
71#	DC4064C00,01,02	20G						2.3p	6.0	1.6-3.0Ø	120				4.0	Si	Z53
72	MA4341C,1,2	20G	50G	80G				2.3p	6.0	1.6 - 3.0	6.0				50	Si	F3a
73#	BSC11	38G						2.3p	18	1.6 - 3.0	18	3.8	10G	1.8	80	Si	F3a
74#	BB105G							2.3p	25	1.8 - 2.8Ø	28			90		Si	A246
75#	BSC23	39G						2.3p	60	1.6 - 3.0	60	3.9	10G	1.8	1.0	Si	F3a
76	SD11B18							2.4p	0.0	2.4 - 4.8	18			2.6		Si	P3
77	SD11C120							2.4p	0.0	2.4 - 4.8	120			4.5		Si	P3
78	SD12B18							2.4p	0.0	2.4 - 4.8	18			2.6		Si	F3a
79	SD12C120							2.4p	0.0	2.4 - 4.8	120			4.5		Si	F3a
80	SD22B18							2.4p	0.0	2.4 - 4.8	18			2.6		Si	F11
81	SD22C120							2.4p	0.0	2.4 - 4.8	120			4.5		Si	F11
82	SD32B18							2.4p	0.0	2.4 - 4.8	18			2.6		Si	F21
83	SD32C120							2.4p	0.0	2.4 - 4.8	120			4.5		Si	F21
84	SD42B18							2.4p	0.0	2.4 - 4.8	18			2.6		Si	F9a
85	SD42C120							2.4p	0.0	2.4 - 4.8	120			4.5		Si	F9a
86	SDGPB18							2.4p	0.0	2.4 - 4.8	18			2.6		Si	DO7
87	SDGPC120							2.4p	0.0	2.4 - 4.8	120			4.5		Si	DO7
88	L8555	90						2.4pØ	6.0	2.0 - 4.0Ø	90 ☑				6.0	Si△$	F27ac
89	L8565	90						2.4pØ	6.0	2.0 - 4.0Ø	90 ☑				10	Si△$	F49c
90#	BSC556							2.5p☑	0.0		5.5					Si	F21
91#	BXY10C							2.5p	0.0	1.5 - 3.5Ø	50			1.5		Si$§	S286
92#	BXY13C							2.5p	0.0	1.5 - 3.5Ø	50			1.5		Si$§	DO19
93	MA4556							2.5p☑	0.0		5.5	6.0	10G			Si§	F21
94▼	VAT61N16							2.5p†	0.0	2.0-3.0Ø	60	1.5k	50M			Si	F10ad
95▼	VAT61N18							2.5p†	0.0	2.0-3.0Ø	60	1.5k	50M			Si	M524a
96▼	VAT61N20							2.5p†	0.0	2.0-3.0Ø	60	1.5k	50M			Si	F27am
97▼	VAT91N16							2.5p†	0.0	2.0-3.0Ø	45	2.0k	50M			Si	F10ad
98▼	VAT91N18							2.5p†	0.0	2.0-3.0Ø	45	2.0k	50M			Si	M524a
99▼	VAT91N20							2.5p†	0.0	2.0-3.0Ø	45	2.0k	50M			Si	F27am
100	MA4284							2.5p	6.0		30	6.0	10G	8.0		Si	F3a
101	MA4384							2.5p	6.0		30			8.0		Si	A31e
102	MA4966C,E,F	100G						2.5p☑	6.0	1.2-2.5Ø	48 ☑				1.5	Si	Z48
103#	BA139							2.5p	25	2.0 - 3.0Ø	28	44	47G	85		Si#$Δ	DO7
104#	BB105A							2.5p	25	2.3 - 2.8Ø	28			.60		Si	A246
105	1N5155A							2.6p	6.0	1.41 - 1.79Ø	35 ☑			2.0	8.7	Si	F27e
106#	BA140							2.6p	25	2.0 - 3.2Ø	28	80	17G	1.5		Si#$Δ	DO7
107#	BSC01							2.7p	0.0		4.5	3.0	10G			Si	F3a
108	GC1606	90G						2.7p§	4.0	5.2;0.0V-45V$	45 ☑	1.8k	50M				F27w
109	GC1706	55G						2.7p§	4.0	5.9;0.0V-60V$	60 ☑	1.1k	50M				F27w
110	SQ1215A,B,C							2.7p§%	4.0		30 ☑	1.3k	50M		250m	Si#$	A1ah

SYMBOLS AND CODES EXPLAINED IN INTERPRETER

10 VOLTAGE VARIABLE CAPACITORS & VARACTOR DIODES

IN ORDER OF (1) TYPICAL CAPACITANCE, (2) TEST VOLTAGE, and (3) TYPE No.

LINE No	3 TYPE No.	MINIMUM CUTOFF FREQUENCY (Corresponding to Type Numbers in previous column) (Hz)	(Hz)	(Hz)	(Hz)	(Hz)	(Hz)	TYP. CAP. 1 CAP. Cj (F)	2 at TEST VOLT (V)	CAPACITANCE RANGE (for V = 0 to PIV) Ø - at TEST VOLT. (pF)	PIV (V)	Q FACTOR MIN. Q	at TEST FREQ (Hz)	MAX. SER. RES. Rs (Ω)	MAX. DISS. @ 25°C (W)	DESCRIPTION MAT.	DWG. No.
1	SQ1265A,B,C							2.7p§%	4.0		30 ⧄	650	50M		250m	Si#$	A1ah
2	SD11C24							2.8p	0.0	2.8 - 5.6	24			4.5		Si	P3
3	SD12C24							2.8p	0.0	2.8 - 5.6	24			4.5		Si	F3a
4	SD22C24							2.8p	0.0	2.8 - 5.6	24			4.5		Si	F11
5	SD32C24							2.8p	0.0	2.8 - 5.6	24			4.5		Si	F21
6	SD42C24							2.8p	0.0	2.8 - 5.6	24			4.5		Si	F9a
7	SDGPC24							2.8p	0.0	2.8 - 5.6	24			4.5		Si	DO7
8	D5940B							3.0p	0.0		60 ⧄	1.4kØ	50M				F27g
9	D5950B							3.0p	0.0		90 ⧄	1.0kØ	50M				F27g
10	PA0200B	40G						3.0p	0.0	2.0 - 4.0Ø	5.5	4.0	10G		.20	Si	F3a⧄
11	DE1716A							3.0pt	4.0	2.7-3.3Ø	30 ⧄	1.2k	50M		4.0		F77
12	DEP1716A							3.0pt	4.0	2.7-3.3Ø	30 ⧄	1.2k	50M		4.0		F78
13	E1716A							3.0pt	4.0	2.7-3.3	30	1.2k	50M		4.0		F10k
14	EP1716A							3.0pt	4.0	2.7-3.3	30	1.2k	50M		4.0		F27ac
15	MV1716,A							3.0p	4.0		30 ⧄	600	50M		400m	Si△#	DO7
16	SQ1716,B,C							3.0p§%	4.0	2.7-3.3Ø	30 ⧄	1.2k	50M		500m	Si#$	DO7
17	VH3,A,B							3.0p%	4.0	1.5 - 7.0	25 $	13	.05G		50	Si$	DO14
18	VH3E							3.0p	4.0	1.0 - 7.0	100 $	3.0	50M		500m	Si$	DO14
19	MA4259							3.0p	5.0								P6
20#	1S1564	30G						3.0p	6.0	2.0-4.0Ø	60				3.0	Si$#	F49d
21	1S1574	30G						3.0p	6.0	2.0-4.0Ø	60				1.0	Si$#	F27ad
22	A709-3A,B,C,D,E,F	5.0G	10G	15G	20G	30G	40G	3.0p	6.0	2.0 - 4.1Ø	24				1.5	Si△$	F11
23	A709-3G,H,I,J	50G	60G	70G	80G			3.0p	6.0	2.0 - 4.1Ø	24				1.5	Si△$	F11
24	A709-4A,B,C,D,E,F	5.0G	10G	15G	20G	30G	40G	3.0p	6.0	2.0 - 4.1Ø	30				1.5	Si△$	F11
25	A709-4G,H	50G	60G					3.0p	6.0	2.0 - 4.1Ø	30				1.5	Si△$	F11
26	A709-5A,B,C,D,E,F	5.0G	10G	15G	20G	30G	40G	3.0p	6.0	2.0 - 4.1Ø	45				1.5	Si△$	F11
27	A709-5G,H	50G	60G					3.0p	6.0	2.0 - 4.1Ø	45				1.5	Si△$	F11
28	A709-6A,B,C,D,E,F	5.0G	10G	15G	20G	30G	40G	3.0p	6.0	2.0 - 4.1Ø	60				1.5	Si△$	F11
29	A709-6G	50G						3.0p	6.0	2.0 - 4.1Ø	60				1.5	Si△$	F11
30	A709-7A,B,C,D,E,F	5.0G	10G	15G	20G	30G	40G	3.0p	6.0	2.0 - 4.1Ø	90				1.5	Si△$	F11
31	A709-8A,B,C,D,E	5.0G	10G	15G	20G	30G		3.0p	6.0	2.0 - 4.1Ø	120				1.5	Si△$	F11
32	B015020C,D,E	20G	40G	60G				3.0p	6.0	2.0 - 4.0Ø	15				.90	Si	F27k
33	B024020C,D,E	20G	40G	60G				3.0p	6.0	2.0 - 4.0Ø	24				1.4	Si	F27k
34	B030020B,C,D,E	10G	20G	40G	60G			3.0p	6.0	2.0 - 4.0Ø	30				1.5	Si	F27k
35	B045020B,C,D	10G	20G	40G				3.0p	6.0	2.0 - 4.0Ø	45				1.7	Si	F27k
36	B060020A,B,C,D	5G	10G	20G	40G			3.0p	6.0	2.0 - 4.0Ø	60				2.0	Si	F27k
37	B090020A,B,C	5G	10G	20G				3.0p	6.0	2.0 - 4.0Ø	90				2.5	Si	F27k
38	C015020C,D,E	20G	40G	60G				3.0p	6.0	2.0 - 4.0Ø	15				2.1	Si	F49
39	C024020C,D,E	20G	40G	60G				3.0p	6.0	2.0 - 4.0Ø	24				2.2	Si	F49
40	C030020B,C,D,E	10G	20G	40G	60G			3.0p	6.0	2.0 - 4.0Ø	30				2.3	Si	F49
41	C045020B,C,D	10G	20G	40G				3.0p	6.0	2.0 - 4.0Ø	45				2.5	Si	F49
42	C060020A,B,C,D	5G	10G	20G	40G			3.0p	6.0	2.0 - 4.0Ø	60				2.6	Si	F49
43	C090020A,B,C	5G	10G	20G				3.0p	6.0	2.0 - 4.0Ø	90				3.2	Si	F49
44	MA4955C	70G						3.0p	6.0	2.0 - 4.0Ø	80				4.0	Si$	F49a
45	MA4955E	70G						3.0p	6.0	2.0 - 4.0Ø	80				4.0	Si$	F27r
46#	MVE6003	50G						3.0p	6.0	2.0-4.0Ø	50 ⧄				8.3	Si$	S250b
47	P015020C,D,E	20G	40G	60G				3.0p	6.0	2.0 - 4.0Ø	15				.90	Si	F27ad
48	P024020C,D,E	20G	40G	60G				3.0p	6.0	2.0 - 4.0Ø	24				1.4	Si	F27ad
49	P030020B,C,D,E	10G	20G	40G	60G			3.0p	6.0	2.0 - 4.0Ø	30				1.5	Si	F27ad
50	P045020B,C,D	10G	20G	40G				3.0p	6.0	2.0 - 4.0Ø	45				1.7	Si	F27ad
51	P060020A,B,C,D	5G	10G	20G	40G			3.0p	6.0	2.0 - 4.0Ø	60				2.0	Si	F27ad
52	P090020A,B,C	5G	10G	20G				3.0p	6.0	2.0 - 4.0Ø	90				2.5	Si	F27ad
53	PH1203-1,2,3,4		5.0G	10G	15G	20G		3.0p	6.0	2.0 - 4.0Ø	60	⧄	10G			Si	F58
54	PH1213-1,2,3,4		5.0G	10G	15G	20G		3.0p	6.0	2.0 - 4.0Ø	15	⧄	10G			Si$	F58
55	PH1223-1,2,3,4		5.0G	10G	15G	20G		3.0p	6.0	2.0 - 4.0Ø	24	⧄	10G			Si$	F58
56	PH1233-1,2,3,4		5.0G	10G	15G	20G		3.0p	6.0	2.0 - 4.0Ø	30	⧄	10G			Si$	F58
57	PH1243-1,2,3,4		5.0G	10G	15G	20G		3.0p	6.0	2.0 - 4.0Ø	45	⧄	10G			Si$	F58
58	PH1253-1,2,3,4		5.0G	10G	15G	20G		3.0p	6.0	2.0 - 4.0Ø	60	⧄	10G			Si$	F58
59	PH1263-1,2,3,4		5.0G	10G	15G	20G		3.0p	6.0	2.0 - 4.0Ø	90	⧄	10G			Si$	F58
60	PH1273-1,2,3,4		5.0G	10G	15G	20G		3.0p	6.0	2.0 - 4.0Ø	120	⧄	10G			Si$	F58
61	PH1283-1,2,3,4		5.0G	10G	15G	20G		3.0p	6.0	2.0 - 4.0Ø	150	⧄	10G			Si$	F58
62	PH1293-1,2,3	5.0G	10G	15G				3.0p	6.0	2.0 - 4.0Ø	200	⧄	10G			Si$	F58
63	PL0103-1,2,3,4		5.0G	10G	15G	20G		3.0p	6.0	2.0 - 4.0Ø	6.0	⧄	10G			Si	F27d
64	PL0113-1,2,3,4		5.0G	10G	15G	20G		3.0p	6.0	2.0 - 4.0Ø	15	⧄	10G			Si	F27d
65	PL0123-1,2,3,4		5.0G	10G	15G	20G		3.0p	6.0	2.0 - 4.0Ø	24	⧄	10G			Si	F27d
66	PL0133-1,2,3,4		5.0G	10G	15G	20G		3.0p	6.0	2.0 - 4.0Ø	30	⧄	10G			Si	F27d
67	PL0143-1,2,3,4		5.0G	10G	15G	20G		3.0p	6.0	2.0 - 4.0Ø	45	⧄	10G			Si	F27d
68	PL0153-1,2,3,4		5.0G	10G	15G	20G		3.0p	6.0	2.0 - 4.0Ø	60	⧄	10G			Si	F27d
69	PL0153A,B-E	30G	40G	50G	60G	70G		3.0p	6.0	2.0-4.0Ø	60	⧄	10G			Si	F27d
70	PL0163-1,2,3,4		5.0G	10G	15G	20G		3.0p	6.0	2.0 - 4.0Ø	90	⧄	10G			Si	F27d
71	PL0173-1,2,3,4		5.0G	10G	15G	20G		3.0p	6.0	2.0 - 4.0Ø	120	⧄	10G			Si	F27d
72	PL0183-1,2,3,4		5.0G	10G	15G	20G		3.0p	6.0	2.0 - 4.0Ø	150	⧄	10G			Si	F27d
73	PL0503-1,2,3,4		5.0G	10G	15G	20G		3.0p	6.0	2.0 - 4.0Ø	6.0	⧄	10G			Si	F10p
74	PL0513-1,2,3,4		5.0G	10G	15G	20G		3.0p	6.0	2.0 - 4.0Ø	15	⧄	10G			Si	F10p
75	PL0523-1,2,3,4		5.0G	10G	15G	20G		3.0p	6.0	2.0 - 4.0Ø	24	⧄	10G			Si	F10p
76	PL0533-1,2,3,4		5.0G	10G	15G	20G		3.0p	6.0	2.0 - 4.0Ø	30	⧄	10G			Si	F10p
77	PL0543-1,2,3,4		5.0G	10G	15G	20G		3.0p	6.0	2.0 - 4.0Ø	45	⧄	10G			Si	F10p
78	PL0553-1,2,3,4		5.0G	10G	15G	20G		3.0p	6.0	2.0 - 4.0Ø	60	⧄	10G			Si	F10p
79	PL0563-1,2,3,4		5.0G	10G	15G	20G		3.0p	6.0	2.0 - 4.0Ø	90	⧄	10G			Si	F10p
80	PL0573-1,2,3,4		5.0G	10G	15G	20G		3.0p	6.0	2.0 - 4.0Ø	120	⧄	10G			Si	F10p
81	PL0583-1,2,3,4		5.0G	10G	15G	20G		3.0p	6.0	2.0 - 4.0Ø	150	⧄	10G			Si	F10p
82	PL0593-1,2,3	5.5G	10G	15G				3.0p	6.0	2.0 - 4.0Ø	200	⧄	10G			Si	F10p
83#	SV56C	25G						3.0p	6.0	2.0 - 4.0Ø	60				1.0	Si	F27a
84#	SV66C	40GØ						3.0p	6.0	2.0 - 4.0Ø	60					Si$#	S250c
85#	SV67C	50GØ						3.0p	6.0	2.0 - 4.0Ø	90					Si$#	S250c
86	VAB803N20,N26,N28	120						3.0p△	6.0	2.5-3.5Ø	80					Si	Z42
87	VAB813AN20,AN25	140G						3.0p△	6.0	2.5-3.5	60				10	Si$	Z42
88	VAB813AN20,25	140						3.0p△	6.0	2.5-3.5Ø	60					Si	Z42
89	VAB813AN26,AN28	140G						3.0p△	6.0	2.5-3.5	60				10	Si$	Z42
90	VAB813AN26,28	140						3.0p△	6.0	2.5-3.5Ø	60					Si	Z42
91	MA4251							3.0p⧄	30								F3a
92	MA4562							3.0p⧄	30								F9
93	MA4257							3.2p	0.0	2.5 - 4.0		3.0	10G				F9
94	SD11C6							3.2p	0.0	3.2 - 6.0	6.0			1.5		Si	P3
95	SD12C6							3.2p	0.0	3.2 - 6.0	6.0			1.5		Si	F3a
96	SD22C6							3.2p	0.0	3.2 - 6.0	6.0			1.5		Si	F11
97	SD32C6							3.2p	0.0	3.2 - 6.0	6.0			1.5		Si	F21
98	SD42C6							3.2p	0.0	3.2 - 6.0	6.0			1.5		Si	F9a
99	SDGPC6							3.2p	0.0	3.2 - 6.0	6.0			1.5		Si	DO7
100▼	SV240	4.0G						3.2p	10	2.0-3.5	60 ⧄			500m⧄	6.2	Si	F56q
101#	ZC32	100G						3.3p	0.0	2.2-4.4t	6.0				150m	Si	Z60
102	CV1862B							3.3p	4.0	2.97-3.63	60	300	100M		5.0	Si	F27x⧄
103	CV1862D							3.3p	4.0	2.97-3.63	60	300	100M		5.0	Si	F56n⧄
104#	DC4256							3.3p	4.0		60	500	50M			Si	M524
105	E603							3.3p	4.0		60	500	50M			Si	
106	E703							3.3p	4.0		60	1.1k	50M			Si	
107	GC1607	90G						3.3p§	4.0	5.3;0.0V-45V$	45 ⧄	1.8k	50M				F27w
108	GC1707	55G						3.3p§	4.0	6.0;0.0V-60V$	60 ⧄	1.1k	50M				F27w
109	IC53-30,A,B,C							3.3p%	4.0	6.500-1.500	50	300	50M		500m	Si	M214a
110	IC103-30,A,B,C							3.3p%	4.0	6.500-1.000	100	300	50M		500m	Si	M214a

SYMBOLS AND CODES EXPLAINED IN INTERPRETER

10 VOLTAGE VARIABLE CAPACITORS & VARACTOR DIODES

IN ORDER OF (1) TYPICAL CAPACITANCE, (2) TEST VOLTAGE, and (3) TYPE No.

LINE No.	3 TYPE No.	MINIMUM CUTOFF FREQUENCY (Corresponding to Type Numbers in previous column) (Hz)	(Hz)	(Hz)	(Hz)	(Hz)	(Hz)	TYP. CAP. 1 CAP. Cj (F)	2 at TEST VOLT (V)	CAPACITANCE RANGE (for V = 0 to PIV) Ø - at TEST VOLT. (pF)	PIV (V)	Q FACTOR MIN. Q	at TEST FREQ (Hz)	MAX. SER. RES. Rs (Ω)	MAX DISS. @ 25°C (W)	DESCRIPTION MAT.	DWG. No.
1	MC3							3 3p	4 0		60 †	10	50M			Si	A1au
2	MC203⊘							3.3p	4.0		60	25	50M			Si	A1au
3	MC303							3.3p	4.0			50	50M			Si	A1au
4	MC403							3.3p	4.0		60 †	100	50M			Si	A1au
5	MV1862A							3.3pt	4 0	2 97 - 3 63Ø	60			1 6	5 0	Si	F27a
6	MV1862B							3 3pt	4.0	2.97 - 3.63Ø	60			1 6	5 0	Si	F10a
7	MV1862D							3 3pt	4.0	2.07 - 3.63Ø	60			1 6	5 0	Si	F56e
8	P060003-1R							3.3p	4.0	4 3;1V-60V$	60	400 Ø	50M			Si	F27ad
9	P060003-2R							3.3p	4.0	4.3;1V-60V$	60	800 Ø	50M			Si	F27ad
10	P060003-3R							3 3p	4.0	4.3;1V-60V$	60	1 2kØ	50M			Si	F27ad
11	PV1862D							3.3pΔ	4.0	2.8;4 0V-60V$	60 $	300	100M		2 0	*	F56j
12	PVM4033,A,B							3 3p%	4.0	6 50;0.0V-40V$	40 $	120	1 0G		2 0	*	F56j
13	PVM6033,A,B							3.3p%	4.0	7 65,0.0V-60V$	60 $	80	1.0G		2 0	*	F56j
14	SQ1216A,B,C							3.3p$%	4 0		30 ⊘	1 2k	50M		250m	Si#$	A1ah
15	SQ1266A,B,C							3 3p$%	4.0		30 ⊘	600	50M		250m	Si#$	A1ah
16	VVC780,A,B,C,D							3 3p%	4.0		60	25	50M			Si	DO7
17	VVC781,A,B,C,D							3 3p%	4 0		60	50	50M			Si	DO7
18	VVC782,A,B,C,D							3.3p%	4 0		60	100	50M			Si	DO7
19	MV1816B1							3.3pt⊘	6 0	2 7 - 3 3Ø	75			57 ⊘	11	Si	F27n
20	MV1816A1							3.4pt⊘	6.0	2.8 - 3 4Ø	75			57 ⊘	11.	Si	F10j
21#	1S361	50G						3.5p⊘			5.0				200m	Si§	F3a
22▼	VAT92N16							3.5pt		3 0-4.0Ø	45	2 0k	50M			Si	F10ad
23▼	VAT92N18							3 5pt		3.0-4 0Ø	45	2.0k	50M			Si	M524a
24▼	VAT92N20							3.5pt		3.0-4 0Ø	45	2 0k	50M			Si	F27am
25▼	VAT62N16							3.5pt	0 0	3.0-4.0Ø	60	1 3k	50M			Si	F10ad
26▼	VAT62N18							3.5pt	0.0	3 0-4.0Ø	60	1.3k	50M			Si	M524a
27▼	VAT62N20							3.5pt	0 0	3 0-4.0Ø	60	1 3k	50M			Si	F27am
28	MA43003							3 5p⊘	10	1 9-3 5Ø	40 ⊘				5 8 ⊘	Si$Δ	F56b
29	SD11C48							3.6p	0 0	3 6 - 7 2	48			2 6		Si	P3
30	SD12C48							3.6p	0 0	3 6 - 7.2	48			2 6		Si	F3a
31	SD22C48							3 6p	0.0	3.6 - 7 2	48			2 6		Si	F11
32	SD32C48							3 6p	0 0	3.6 - 7 2	48			2 6		Si	F21
33	SD42C48							3.6p	0.0	3 6 - 7.2	48			2 6		Si	F9a
34	SDGPC48							3 6p	0 0	3.6 - 7 2	48			2 6		Si	DO7
35	DE1717A							3 6pt	4 0	3.3-4.0Ø	30 ⊘	1 2k	50M		4 0		F77
36	DEP1717A							3 6pt	4 0	3 3-4.0Ø	30 ⊘	1 2k	50M		4.0		F78
37	E1717A							3 6pt	4 0	3 3-4 0	30	1 2k	50M		4.0		F10k
38	EP1717A							3 6pt	4.0	3.3-4 0	30	1 2k	50M		4 0		F27ac
39	G603							3 6p	4 0		25 ⊘	600	50M		400m	SiΔ#	A60j
40	MV1717,A							3 6p	4 0		30 ⊘	600	50M		400m	SiΔ#	DO7
41	SQ1717,B,C							3 6p$%	4.0	3 2-4 1Ø	30 ⊘	1 2k	50M		500m	Si#$	DO7
42	MV1816B							3.6pt⊘	6.0	2.4 - 3.6Ø	75		0 0G	57 ⊘	7 5	Si	F27n
43	MV1816A							3 7pt⊘	6 0	2.5 - 3.7Ø	75			57 ⊘	7 5	Si	F10j
44	SD11C60							3 8p	0 0	3 8 - 7 6	60			2.6		Si	P3
45	SD12C60							3 8p	0.0	3.8 - 7.6	60			2 6		Si	F3a
46	SD22C60							3 8p	0 0	3 8 - 7 6	60			2.6		Si	F11
47	SD32C60							3 8p	0 0	3.8 - 7 6	60			2.6		Si	F21
48	SD42C60							3 8p	0.0	3 8 - 7 6	60			2 6		Si	F9a
49	SDGPC60							3 8p	0.0	3 8 - 7 6	60			2.6		Si	DO7
50▼	BV140	35G						3 9p	1 0	1 8-9.7	30			2.8	250m		
51	GC1608	90G						3 9p$	4 0	5 4,0 0V-45V$	45 ⊘	1 8k	50M				F27w
52	GC1708	52G						3 9p$	4.0	6.0;0 0V-60V$	60 ⊘	1 05k	50M				F27w
53	PVM4039,A,B							3 9p%	4 0	6.75;0.0V-40V$	40 $	110	1 0G		2 0	*	F56j
54	PVM6039,A,B							3.9p%	4.0	7 90;0.0V-60V$	60 $	75	1 0G		2 0	*	F56j
55	SQ1217A,B,C							3 9p$%	4.0		30 ⊘	1 1k	50M		250m	Si#$	A1ah
56	SQ1267A,B,C							3 9p$%	4 0		30 ⊘	550	50M		250m	Si#$	A1ah
57#	BSC557							4.0p⊘	0 0		5 5	4 0	10G			Si	F21
58	D5940C							4 0p	0 0		60 ⊘	1 4kØ	50M				F27g
59	D5950C							4.0p	0 0		90 ⊘	1 0kØ	50M				F27g
60	MA4557							4 0p⊘	0.0		5 5	4 0	10G			Si§	F21
61	SD11C12							4.0p	0 0	4.0 - 7.5	12			1 7		Si	P3
62	SD11D90							4 0p	0 0	4 0 - 8 0	90			2 6		Si	P3
63	SD11D100							4 0p	0 0	4 0 - 8 0	100			2 6		Si	P3
64	SD12C12							4 0p	0 0	4 0 - 7 5	12			1 7		Si	F3a
65	SD12D90							4 0p	0 0	4.0 - 8 0	90			2 6		Si	F3a
66	SD12D100							4 0p	0 0	4 0 - 8 0	100			2 6		Si	F3a
67	SD22C12							4.0p	0 0	4 0 - 7 5	12			1 7		Si	F11
68	SD22D90							4.0p	0.0	4.0 - 8.0	90			2 6		Si	F11
69	SD22D100							4 0p	0 0	4 0 - 8 0	100			2 6		Si	F11
70	SD32C12							4.0p	0.0	4 0 - 7 5	12			1 7		Si	F21
71	SD32D90							4.0p	0 0	4 0 - 8 0	90			2 6		Si	F21
72	SD32D100							4 0p	0.0	4.0 - 8 0	100			2 6		Si	F21
73	SD42C12							4 0p	0 0	4 0 - 7 5	12			1 7		Si	F9a
74	SD42D90							4.0p	0 0	4 0 - 8 0	90			2 6		Si	F9a
75	SD42D100							4 0p	0.0	4 0 - 8 0	100			2 6		Si	F9a
76	SDGPC12							4.0p	0 0	4 0 - 7.5	12			1 7		Si	DO7
77	SDGPD90							4 0p	0.0	4 0 - 8.0	90			2 6		Si	DO7
78	SDGPD100							4 0p	0 0	4 0 - 8.0	100			2 6		Si	DO7
79#	1S1500							4 0p	4 0		15	150	50M			Si$	A1ce
80	D6900							4 0p	4 0	2 4,2-30V$	30	600	50M		40	Si$	DO7
81	VVC854,A,B,C,D							4.0p%	4 0		20	125	50M			Si	DO7
82	VVC1002,A,B,C,D							4.0p%	4 0		20	125	50M			Si	DO7
83	MA4285							4 0p	6 0		30			6 0		Si	F3a
84	MA4385							4 0p	6.0		30			6 0		Si	A31e
85	MA4965C,D,E	70G						4.0p⊘	6 0	2 0-4 0Ø	60 ⊘				3 0	Si	Z48
86#	SFD2-322	50G						4.0p	6 0	$2 0;1.0V - 10V	90				5 0	Si	F27d
87#	SFD322	50G						4 0p	6 0	$2.0;1 0V - 10V	90				7 0	Si	F49
88▼#	1S2147A							4 0p	10	13 5-4 0Ø	45	300	50M			Si	A1tr
89▼#	1S2147B							4.0p	10	13 5-4 0Ø	45	300	50M			Si	A1tr
90▼#	1S2147C							4 0p	10	13 5-4 0Ø	45	300	50M			Si	A1tr
91▼#	1S2147D							4 0p	10	13 5-4 0Ø	45	300	50M			Si	A1tr
92♦	SV110							4 0p	10	3.0-5 0	70 ⊘			300m⊘	350m	Si	A1tk
93▼	SV111							4.0p	10	3.0-5 0	70 ⊘			300m⊘	350m	Si	F27aj
94▼	SV112							4 0p	10	3 0-5 0	70 ⊘			300m⊘	350m	Si	F56q
95▼	SV113							4.0p	10	3 0-5 0	70 ⊘			300m⊘	350m	Si	M465
96▼	SV114							4 0p	10	3 0-5 0	70 ⊘			300m⊘	350m	Si	A185f
97#	BB100GVE							4.1p	30	2 4;3 0 - 30V$	35			2 0		Si#$	DO7
98	1N4091	30G						4.2p	0.0	2 4 - 6 0Ø	6 0				30	Si	P3
99	PA0200A	30G						4 2p	0 0	2 4 - 6 0Ø	5.5	3 0	10G		30	Si	F3a⊘
100▼	VAT93N16							4 5pt		4 0-5 0Ø	45	1 8k	50M			Si	F10ad
101▼	VAT93N18							4 5pt		4 0-5 0Ø	45	1 8k	50M			Si	M524a
102▼	VAT93N20							4 5pt		4.0-5 0Ø	45	1 8k	50M			Si	F27am
103#	BXY10D							4 5p	0.0	3 0 - 6.0Ø	50			1 3		Si$§	S286
104#	BXY13D							4 5p	0.0	3 0 - 6 0Ø	50			1 3		Si$§	DO19
105▼	VAT63N16							4 5pt	0.0	4.0-5 0Ø	60	1 3k	50M			Si	F10ad
106▼	VAT63N18							4 5pt	0.0	4.0-5 0Ø	60	1 3k	50M			Si	M524a
107▼	VAT63N20							4.5pt	0 0	4 0-5.0Ø	60	1 3k	50M			Si	F27am
108	DE1718A							4 5pt	4 0	4.0-5.0Ø	30 ⊘	1 0k	50M		4.0		F77
109	DEP1718A							4 5pt	4 0	4 0-5 0Ø	30 ⊘	1 0k	50M		4 0		F78
110	E1718A							4.5pt	4 0	4 0-5.0	30	1 0k	50M		4 0		F10k

SYMBOLS AND CODES EXPLAINED IN INTERPRETER

10 VOLTAGE VARIABLE CAPACITORS & VARACTOR DIODES

IN ORDER OF (1) TYPICAL CAPACITANCE, (2) TEST VOLTAGE, and (3) TYPE No.

LINE No	3 TYPE No.	MINIMUM CUTOFF FREQUENCY (Corresponding to Type Numbers in previous column) (Hz)	(Hz)	(Hz)	(Hz)	(Hz)	(Hz)	TYP. CAP. 1 CAP. Cj (F)	2 at TEST VOLT (V)	CAPACITANCE RANGE (for V = 0 to PIV) Ø - at TEST VOLT. (pF)	PIV (V)	Q FACTOR MIN. Q	at TEST FREQ (Hz)	MAX. SER. RES Rs (Ω)	MAX. DISS. @ 25°C (W)	DESCRIPTION MAT.	DWG. No.
1	EP1718A							4 5pt†	4 0	4 0-5 0	30	1 0k	50M		4 0		F27ac
2	MV1718,A							4 5p	4 0		30 ⊘	500	50M		400m	Si△#	D07
3	SQ1718,B,C							4 5p§%	4.0	4.0-5.1Ø	30 ⊘	1 0k	50M		500m	Si#$	D07
4	A27	50G						4 5pt†	6 0	3 0-6 0Ø	55	⊘	1 0G	400k⊘	4.0 §⊘	Si#$	F27h
5#	BXY27	50G						4.5p	6.0	4 0 - 70	55			.40 ⊘	4.0	Si#$	F27h
6#	DC4045A00,01,02	10G						4.5p	6 0	3.0-6.0Ø	60				4.0	Si	Z53
7#	DC4045B00,01,02	10G						4.5p	6 0	3 0-6 0Ø	60				4.0	Si	Z53
8▼	GC3304	110G						4 5p	6.0	4.0-5.0Ø	160				25	Si	F49f
9	L8505	50						4 5pØ	6 0	3 0 - 6.0Ø	175 ⊘				30	Si△$	F49c
10	MA4065							4 5p	6 0	3.0 - 6 0Ø	80					Si	S4c
11	MA4260							4 5p	6 0							Si	A1
12	MA4341D1							4 5p	6.0	3 0 - 6 0	6.0			90	.50	Si	F3a
13	MA4341D2							4 5p	6 0	3 0 - 6 0	6.0			50	.50	Si	P3a§
14	MA4341D							4 5p	6 0	3 0 - 6 0	6.0			1 7	50	Si	F3a
15	MA43000							4 5p⊘	6 0	3 0-4.5Ø	85 ⊘				14 ⊘	Si$△	M465
16	MS3140,1,2,3	10G	20G	40G	60G			4 5p	6 0	3 0 - 6.0	30				1 0	GA	P3
17	MS3180,1,2,3	10G	20G	40G	60G			4 5p	6 0	3 0 - 6 0	45				1.0	GA	P3
18	MS3220,1,2,3	10G	20G	40G	60G			4 5p	6.0	3.0 - 6.0	60				1 0	GA	P3
19	MS3270,1-4	10G	20G	40G	60G	80G		4 5p	6 0	3.0 - 6.0	18				1.0	GA	P3
20	MS4170,1-4	10G	20G	40G	60G	80G		4 5p	6.0	3 0 - 6 0Ø	18	⊘	10G		1 0	GA	P3
21	MS4220,1-3	10G	20G	40G	60G			4.5p	6.0	3 0 - 6.0Ø	30	⊘	10G		1 0	GA	P3
22	MS4270,1,2,3	10G	20G	40G	60G			4 5p	6 0	3.0 - 6 0Ø	45	⊘	10G		1 0	GA	P3
23	MS4320,1,2	10G	20G	40G				4 5p	6 0	3 0 - 6 0	60	⊘	10G		1 0	GA	P3
24#	SV55D	17G						4 5p	6 0	3.0 - 6 0Ø	48				1 0	Si	F27a
25#	SV566D							4 5p	6 0	4 0-5 5Ø	70				7.0	Si	S250c
26	VAB802N26,N27,N28	90						4 5p△	6 0	4 0-5 0Ø	120					Si	Z42
27	VAB812AN25,26,28	90G						4 5p△	6 0	4.0-5 0Ø	80					Si	Z42
28	VAB812N26,N27,N28	90						4 5p△	6 0	4 0-5 0Ø	100					Si	Z42
29#	BSC22							4 5p	60		60	1 6	10G			Si	F3a
30	MA4337F							4 5p	90	3 0 - 6 0	90			1.7	30	Si	F9
31	MA4358F							4 5p	120	3.0 - 6 0	120			1 7	50	Si	F21
32#	BA138							4 6p	30	3.8 - 5.5Ø	30			2.0		Si$#	D07
33	CV1863B							4 7p	4 0	4 23-5 17	60	300	100M		5 0	Si	F27x⊘
34	CV1863D							4 7p	4 0	4.23-5.17	60	300	100M		5.0	Si	F56n⊘
35#	DC4257							4 7p	4 0		60	500	50M			Si	M524
36	E605							4 7p	4.0		60	500	50M			Si	
37	E705							4 7p	4 0		60	1 0k	50M			Si	
38	GC1609	90G						4 7p§	4.0	5.4;0 0V-45V$	45 ⊘	1 8k	50M				F27w
39	GC1709	52G						4 7p§	4 0	6.5,0 0V-60V$	60 ⊘	1 05k	50M				F27w
40	IC54-30,A,B,C							4 7p%	4 0	9 500-2 000	50	300	50M		500m	Si	M214a
41	IC104-30,A,B,C							4 7p%	4 0	9.500-1.500	100	300	50M		500m	Si	M214a
42	MV1863A							4 7pt†	4 0	4.23 - 5 17Ø	60			1 1	5.0	Si	F27a
43	MV1863B							4 7pt†	4 0	4 23 - 5 17Ø	60			1 1	5.0	Si	F10a
44	MV1863D							4.7pt†	4 0	4 23 - 5 17Ø	60			1 1	5.0	Si	F56e
45	PC1405A							4.7p§△	4.0		30 $	200	50M				A2u
46	PC1405B							4 7p§△	4 0		30 $	300	50M				A2u
47	PC1405C							4 7p§△	4 0		30 $	400	50M				A2u
48	PC1415A							4 7p§△	4 0		60 $	200	50M				A2u
49	PC1415B							4 7p§△	4 0		60 $	300	50M				A2u
50	PC1415C							4 7p§△	4.0		60 $	400	50M				A2u
51	PC1425A							4.7p§△	4.0		90 $	200	50M				A2u
52	PC1425B							4 7p§△	4.0		90 $	300	50M				A2u
53	PC1435A							4 7p§△	4.0		120 $	200	50M				A2u
54	PC1445A							4 7p§△	4.0		150 $	200	50M				A2u
55	PV1863D							4 7p△	4 0	2 8;4.0V-60V$	60 $	300	100M		2 0	*	F56j
56	PVM4047,A,B							4.7p%	4.0	6 90;0.0V-40V$	40 $	100	1 0G		2.0	*	F56j
57	PVM6047,A,B							4 7p%	4 0	8.15,0.0V-60V$	60 $	70	1 0G		2 0	*	F56j
58	SQ1218A,B,C							4 7p§%	4.0		30 ⊘	1 0k	50M		250m	Si#$	A1ah
59	SQ1268A,B,C							4 7p§%	4 0		30 ⊘	500	50M		250m	Si#$	A1ah
60	L8566	60						4 7pØ	6.0	4 0 - 6.0Ø	120 ⊘				15	Si△$	F49c
61	SD11C18							4.8p	0 0	4 8 - 9.0	18			1 7		Si	P3
62	SD11D120							4 8p	0 0	4 8 - 9 6	120			2.6		Si	P3
63	SD12C18							4.8p	0 0	4.8 - 9.0	18			1 7		Si	F3a
64	SD12D120							4 8p	0 0	4.8 - 9.6	120			2 6		Si	F3a
65	SD22C18							4.8p	0 0	4.8 - 9.0	18			1 7		Si	F11
66	SD22D120							4 8p	0 0	4 8 - 9.6	120			2.6		Si	F11
67	SD32C18							4.8p	0.0	4.8 - 9 0	18			1.7		Si	F21
68	SD32D120							4 8p	0 0	4 8 - 9.6	120			2 6		Si	F21
69	SD42C18							4.8p	0.0	4 8 - 9 0	18			1.7		Si	F9a
70	SD42D120							4 8p	0 0	4.8 - 9 6	120			2 6		Si	F9a
71	SDGPC18							4 8p	0 0	4.8 - 9.0	18			1 7		Si	D07
72	SDGPD120							4 8p	0 0	4 8 - 9.6	120			2 6		Si	D07
73#	1S360	30G						5 0p⊘			5.0				200m	Si§	F3a
74	D5940D							5 0p	0 0		60 ⊘	1 4kØ	50M				F27g
75	D5950D							5 0p	0 0		90 ⊘	1 0kØ	50M				F27g
76	MC5							5.0p	4.0		60 †	10	50M			Si	A1au
77	MC205⊘							5 0p	4.0		60	25	50M			Si	A1au
78	MC305							5 0p	4.0		60	50	50M			Si	A1au
79	MC405							5 0p	4.0		60 †	100	50M			Si	A1au
80#	MV9051							5 0p	4.0	5.0;1.0-10V	30 ⊘	40	50M		100m	Si△	D07
81#	MV9052							5 0p	4 0	5 0,1.0-10V	30 ⊘	40	50M		100m	Si△	D07
82	P060005-1R							5.0p	4.0	4 6;1V-60V$	60	400 Ø	50M			Si	F27ad
83	P060005-2R							5 0p	4.0	4.6,1V-60V$	60	800 Ø	50M			Si	F27ad
84	P060005-3R							5 0p	4 0	4.6,1V-60V$	60	1.2kØ	50M			Si	F27ad
85	VC605,A,B							5 0p%	4 0	3 0;1V-25V$	40 $	200	05G			Si	D07
86	VC606,A,B							5 0p%	4.0	3.0;1V-25V$	40 $	300	.05G			Si	D07
87	VH5,A,B							5 0p%	4.0	2.5 - 13	25 $	13	05G		50	Si$	D014
88	VH5E							5.0p	4 0	1 2 -13	100 $	3 0	50M		500m	Si$	D014
89	VVC783,A,B,C,D							5 0p%	4.0		60	10	50M			Si	D07
90	VVC784,A,B,C,D							5 0p%	4 0		60	25	50M			Si	D07
91	VVC785,A,B,C,D							5 0p%	4.0		60	50	50M			Si	D07
92	VVC786,A,B,C,D							5.0p%	4.0		60	100	50M			Si	D07
93	MA4964B,C	60G						5 0p⊘	6.0	3.0-5 0Ø	70 ⊘				5 0	Si	Z48
94#	MVE6005	30G						5 0p	6 0	4.0-6 0Ø	60 ⊘				8 3	Si$	S250b
95#	SFD2-440A,B	10G	20G					5.0pØ	6 0		10				2 0	Si$	F27d
96#	SFD2-441A,B	10G	20G					5 0pØ	6 0		30				2.0	Si$	F27d
97#	SFD2-442A,B	10G	20G					5.0pØ	6 0		60				2 0	Si$	F27d
98#	SFD2-442C	40G						5.0pØ	6.0		60				4.0		F27d
99#	SFD2-443A,B	10G	20G					5 0pØ	6.0		90				2.0	Si$	F27d
100#	SFD2-443C	40G						5.0pØ	6 0		90				4.0		F27d
101#	SFD442A,B	10G	20G					5 0pØ	6 0		60				5.0	Si$	F49
102#	SFD442C	40G						5.0pØ	6.0		60				6.0		F49
103#	SFD443A,B	10G	20G					5.0pØ	6 0		90				5 0	Si$	F49
104#	SFD443C	40G						5 0pØ	6.0		90				6 0		F49
105▼	SV230	2.0G						5 0p	10	3.5-6.5	75 ⊘			250m⊘	11	Si	M465
106#	BB100GBE							5 0p	30	2 4;3.0 - 30V$	35			2 0		Si#$	D07
107	D6901							5 4p	4.0	2.6;2-30V$	30	600	50M		40	Si$	D07
108#	BA149							5 5p	2.0	5.8 - 8.2	50	1 7kØ	30M	500m⊘	250m	Si△	D07
109#	1S1922							5.5p	4 0	3.0-8 0Ø	15	100	100M			Si$	A60m
110	MA4954B	60G						5 5p	6 0	4 0 - 7 0Ø	100				8.0	Si$	S250d

SYMBOLS AND CODES EXPLAINED IN INTERPRETER

10 VOLTAGE VARIABLE CAPACITORS & VARACTOR DIODES

IN ORDER OF (1) TYPICAL CAPACITANCE, (2) TEST VOLTAGE, and (3) TYPE No.

LINE No.	3 TYPE No.	MINIMUM CUTOFF FREQUENCY (Corresponding to Type Numbers in previous column) (Hz)	(Hz)	(Hz)	(Hz)	(Hz)	(Hz)	TYP. CAP. 1 CAP. Cj (F)	2 at TEST VOLT (V)	CAPACITANCE RANGE (for V = 0 to PIV) Ø - at TEST VOLT. (pF)	PIV (V)	Q FACTOR MIN. Q	at TEST FREQ (Hz)	MAX. SER. RES. Rs (Ω)	MAX. DISS. @ 25°C (W)	DESCRIPTION MAT.	DWG. No.
1	MA4954C	60G						5.5p	6 0	4.0 - 7.0Ø	100				8 0	Si$	F49a
2	SD11D24							5.6p	0.0	5.6 - 10.5	24			2 6		Si	P3
3	SD12D24							5.6p	0.0	5 6 - 10.5	24			2 6		Si	F3a
4	SD22D24							5.6p	0.0	5 6 - 10.5	24			2.6		Si	F11
5	SD32D24							5.6p	0.0	5.6 - 10 5	24			2 6		Si	F21
6	SD42D24							5 6p	0.0	5.6 - 10.5	24			2.6		Si	F9a
7	SDGPD24							5.6p	0 0	5 6 - 10 5	24			2 6		Si	DO7
8	DE1719A							5.6p†	4.0	5 0-6.1Ø	30 ⧄	1 0k	50M		4.0		F77
9	DEP1719A							5.6p†	4.0	5.0-6.1Ø	30 ⧄	1 0k	50M		4.0		F78
10	E1719A							5.6p†	4.0	5.0-6.1	30	1 0k	50M		4 0		F10k
11	EP1719A							5.6p†	4 0	5 0-6.1	30	1.0k	50M		4.0		F27ac
12	GC1710	52G						5.6p§	4.0	6 5;0.0V-60V$	60 ⧄	1 05k	50M				F27w
13	GC1760							5 6p	4.0	1 8-15	60	1000	50M		300m	Si	A1n
14	MV1719,A							5.6p	4 0		30 ⧄	500	50M		400m	Si△#	DO7
15	PVM4056,A,B							5.6p%	4 0	7 05.0 0V-40V$	40 $	95	1.0G		2.0	*	F56j
16	PVM6056,A,B							5.6p%	4.0	8.35,0.0V-60V$	60 $	65	1.0G		2 0	*	F56j
17	SQ1219A,B,C							5.6p§%	4 0		30 ⧄	1 0k	50M		250m	Si#$	A1ah
18	SQ1269A,B,C							5.6p§%	4 0		30 ⧄	500	50M		250m	Si#$	A1ah
19	SQ1719,B,C							5.6p§%	4.0	5 0-6.2Ø	30 ⧄	1 0k	50M		500m	Si#$	DO7
20	1N5152A							5.7p	6.0	5 1 - 6 3Ø	75 ⧄			1.5	11.	Si	F27e
21	1N5153A							5.7p	6.0	5.1 - 6 3Ø	75 ⧄			1.5	11.	Si	F48b
22	1N5151							5.9p		4 7 - 7 2Ø	75 ⧄			1.5	7 5	Si	F10q
23	1N5152							5.9p		4.7 - 7.2Ø	75 ⧄			1 5	7.5	Si	F27e
24	1N5153							5.9p		4.7 - 7 2Ø	75 ⧄			1.5	7.5	Si	F48b
25	D5940E							6.0p	0 0		60 ⧄	1.4kØ	50M				F27g
26	D5950E							6.0p	0.0		90 ⧄	1 0kØ	50M				F27g
27	MA4685	70G						6.0p	0 0	4.0 - 8.0Ø	8.0			1.2		Si	S215
28	SD11D6							6.0p	0.0	6.0 - 12	6.0			1 0		Si	P3
29	SD12D6							6.0p	0 0	6 0 - 12	6.0			1 0		Si	F3a
30	SD22D6							6.0p	0.0	6.0 - 12	6 0			1 0		Si	F11
31	SD32D6							6.0p	0.0	6.0 - 12	6.0			1.0		Si	F21
32	SD42D6							6.0p	0 0	6 0 - 12	6 0			1.0		Si	F9a
33	SDGPD6							6.0p	0.0	6.0 - 12	6 0			1 0		Si	DO7
34▼#	1S2139A							6.0p	4 0	4.0-8.0Ø	15	100	50M			Si	A60m
35	PC201							6.0p△	4 0	2 4,.10-4 0V$	125 $	175	50M		500m	Si*	DO14
36	MA4261							6.0p	5.0							Si	P3a
37	A710-3A,B,C,D,E,F	5.0G	10G	15G	20G	30G	40G	6.0p	6.0	3 9 - 8.2Ø	24				2.0	Si△$	F11
38	A710-3G,H	50G	60G					6.0p	6 0	3.9 - 8.2Ø	24				2.0	Si△$	F11
39	A710-4A,B,C,D,E,F	5.0G	10G	15G	20G	30G	40G	6.0p	6 0	3.9-8.2Ø	30				2 0	Si△$	F11
40	A710-5A,B,C,D,E,F	5.0G	10G	15G	20G	30G	40G	6.0p	6 0	3 9-8.2Ø	45				2 0	Si△$	F11
41	A710-6A,B,C,D,E	5.0G	10G	15G	20G	30G		6 0p	6.0	3 9-8.2Ø	60				2.0	Si△$	F11
42	A710-7A,B,C,D,E	5.0G	10G	15G	20G	30G		6.0p	6 0	3 9-8.2Ø	90				2 0	Si△$	F11
43	A710-8A,B,C,D	5.0G	10G	15G	20G			6 0p	6.0	3 9-8.2Ø	120				2 0	Si△$	F11
44	D5434-3,2,1	5.0G	10G	15G				6.0p	6.0	4 0 - 8 0Ø	30					Si$	
45	MA4286							6.0p	6 0		30			4 0		Si	F3a
46	MA4386							6 0p	6.0		30			4.0		Si	A31e
47	PH1204-1,2,3,4		5 0G	10G	15G	20G		6 0p	6.0	4 0 - 8.0Ø	6 0	⧄	10G			Si$	F58
48	PH1204A,B-F	30G	40G	50G	60G	70G	80G	6.0p	6 0	4.0-8 0Ø	6 0	⧄	10G			Si$	F58
49	PH1214-1,2,3,4		5 0G	10G	15G	20G		6 0p	6.0	4 0 - 8 0Ø	15	⧄	10G			Si$	F58
50	PH1214A,B-F	30G	40G	50G	60G	70G	80G	6 0p	6 0	4 0-8.0Ø	15	⧄	10G			Si$	F58
51	PH1224-1,2,3,4		5 0G	10G	15G	20G		6 0p	6.0	4 0 - 8 0Ø	24	⧄	10G			Si$	F58
52	PH1224A,B-F	30G	40G	50G	60G	70G	80G	6 0p	6.0	4 0-8.0Ø	24	⧄	10G			Si$	F58
53	PH1234-1,2,3,4		5.0G	10G	15G	20G		6.0p	6 0	4 0 - 8 0Ø	30	⧄	10G			Si$	F58
54	PH1234A,B,C	30G	40G	50G				6 0p	6.0	4 0-8.0Ø	30	⧄	10G			Si$	F58
55	PH1244-1,2,3,4		5.0G	10G	15G	20G		6 0p	6.0	4.0 - 8 0Ø	45	⧄	10G			Si$	F58
56	PH1244A,B,C	30G	40G	50G				6.0p	6 0	4 0-8.0Ø	45	⧄	10G			Si$	F58
57	PH1254-1,2,3,4		5.0G	10G	15G	20G		6.0p	6.0	4 0 - 8.0Ø	60	⧄	10G			Si$	F58
58	PH1254A,B,C	30G	40G	50G				6 0p	6 0	4 0-8.0Ø	60	⧄	10G			Si$	F58
59	PH1264-1,2,3,4		5.0G	10G	15G	20G		6.0p	6 0	4.0 - 8 0Ø	90	⧄	10G			Si$	F58
60	PH1264A,B,C	30G	40G	50G				6 0p	6 0	4.0-8.0Ø	90	⧄	10G			Si$	F58
61	PH1274-1,2,3,4		5.0G	10G	15G	20G		6 0p	6.0	4.0 - 8.0Ø	120	⧄	10G			Si$	F58
62	PH1274A	30G						6.0p	6.0	4 0-8 0Ø	120	⧄	10G			Si$	F58
63	PH1284-1,2,3	5.0G	10G	15G				6.0p	6 0	4.0 - 8 0Ø	150	⧄	10G			Si$	F58
64	PH1294-1,2	5 0G	10G					6 0p	6 0	4.0 - 8.0Ø	200	⧄	10G			Si$	F58
65	PL0104-1,2,3,4		5 0G	10G	15G	20G		6.0p	6 0	4.0 - 8 0Ø	6 0	⧄	10G			Si	F27d
66	PL0104A,B-F	30G	40G	50G	60G	70G	80G	6.0p	6 0	4 0-8.0Ø	6 0	⧄	10G			Si	F27d
67	PL0114-1,2,3,4		5 0G	10G	15G	20G		6.0p	6 0	4 0 - 8 0Ø	15	⧄	10G			Si	F27d
68	PL0114A,B-F	30G	40G	50G	60G	70G	80G	6.0p	6.0	4 0-8.0Ø	15	⧄	10G			Si	F27d
69	PL0124-1,2,3,4		5 0G	10G	15G	20G		6.0p	6 0	4.0 - 8 0Ø	24	⧄	10G			Si	F27d
70	PL0124A,B-F	30G	40G	50G	60G	70G	80G	6.0p	6 0	4.0-8 0Ø	24	⧄	10G			Si	F27d
71	PL0134-1,2,3,4		5 0G	10G	15G	20G		6 0p	6 0	4.0 - 8.0Ø	30	⧄	10G			Si	F27d
72	PL0134A,B,C	30G	40G	50G				6.0p	6 0	4 0-8 0Ø	30	⧄	10G			Si	F27d
73	PL0144-1,2,3,4		5 0G	10G	15G	20G		6.0p	6 0	4.0 - 8 0Ø	45	⧄	10G			Si	F27d
74	PL0144A,B,C	30G	40G	50G				6 0p	6.0	4.0-8 0Ø	45	⧄	10G			Si	F27d
75	PL0154-1,2,3,4		5 0G	10G	15G	20G		6 0p	6 0	4 0 - 8.0Ø	60	⧄	10G			Si	F27d
76	PL0154A,B,C	30G	40G	50G				6 0p	6.0	4 0-8 0Ø	60	⧄	10G			Si	F27d
77	PL0164-1,2,3,4		5 0G	10G	15G	20G		6 0p	6 0	4.0 - 8 0Ø	90	⧄	10G			Si	F27d
78	PL0164A,B,C	30G	40G	50G				6 0p	6 0	4 0-8 0Ø	90	⧄	10G			Si	F27d
79	PL0174-1,2,3,4		5 0G	10G	15G	20G		6 0p	6.0	4.0 - 8.0Ø	120	⧄	10G			Si	F27d
80	PL0174A	30G						6.0p	6.0	4 0-8.0Ø	120	⧄	10G			Si	F27d
81	PL0184-1,2,3	5 0G	10G	15G				6.0p	6 0	4 0 - 8 0Ø	150	⧄	10G			Si	F27d
82#	SV56D	17G						6 0p	6.0	4.0 - 8.0Ø	60				1 0	Si	F27a
83#	SV66D	40GØ						6 0p	6 0	4.0 - 8 0Ø	60					Si$#	S250a
84#	SV67D	30GØ						6.0p	6.0	4 0 - 8.0Ø	90					Si$#	S250c
85#	SV89D							6.0p	6.0	4 0 - 8 0Ø	120			1 5 ⧄		Si$#	S201
86	VAT11N16,N18,N20							6.5p†△	0.0	5 0 - 7 9Ø	120	500	50M				Z42
87	VAT51N16,N18,N20							6.5p†△	0 0	5 0 - 7.9Ø	60	1100	50M				Z42
88	VAT71N16,N18,N20							6.5p△†	0.0	5 0 - 7 9Ø	45	1700	50M				Z42
89	KV107,A,B,C,D							6.5p%	4.0	3.0-15.8	30	150	50M		400m	Si	DO14
90	KV138							6.5p	4 0	3.3-15 8	25	75	50M		400m	Si	DO14
91	KV139							6.5p	4.0	2 5-15 8	50	150	50M		400m	Si	DO14
92	KV140							6.5p	4.0	2 1-15 8	80	75	50M		400m	Si	DO14
93	KV141							6 5p	4 0	1 9-15 8	100	125	50M		400m	Si	DO14
94	KV150							6 5p	4 0	2 1-15 8	80	100	50M		400m	Si	DO14
95	KV156							6.5p	4.0	3.3-15 8	25	150	50M		400m	Si	DO14
96	KV162							6 5p	4.0	1 9-15 8	100	75	50M		400m	Si	DO14
97	KV212							6 5p	4 0	1 6-15.8	150	75	50M		400m	Si	DO14
98	KV213							6 5p	4 0	1 6-15 8	150	100	50M		400m	Si	DO14
99	KV312							6.5p	4.0	5 7;2 0V-200V$	200	75	50M		400m	Si	DO14
100	KV313							6.5p	4 0	2.7;4.0V-60V$	200	100	50M		400m	Si	DO14
101	MA4019B							6 5p	4 0	4.5$ 110⧄	100		05G			Si#$	Z45
102	VA107							6 5p	4 0	15 8 - 3.0	30	150	.05G		50	Si$	A131
103	VA138							6.5p	4 0	15 8 - 3 3	25	75	.05G		50	Si$	A131
104	VA139							6 5p	4 0	15 8 - 2 5	50	150	.05G		50	Si$	A131
105	VA140							6.5p	4.0	15 8 - 2 1	80	75	05G		50	Si$	A131
106	VA141							6 5p	4 0	15 8 - 1 9	100	125	05G		.50	Si$	A131
107	VA150							6 5p	4 0	15 8 - 2.1	80	100	.05G		50	Si$	A131
108	VA156							6 5p	4 0	15 8 - 3.3	25	150	05G		50	Si$	A131
109	VA162							6.5p	4 0	15 8 - 1 9	100	75	05G		50	Si$	A131
110	VA212	37G						6.5p	4 0	15 8 - 1 6	150	75	05G	6.5	50	Si$	A131

SYMBOLS AND CODES EXPLAINED IN INTERPRETER

10 VOLTAGE VARIABLE CAPACITORS & VARACTOR DIODES

IN ORDER OF (1) TYPICAL CAPACITANCE, (2) TEST VOLTAGE, and (3) TYPE No.

LINE No.	TYPE No. [3]	MINIMUM CUTOFF FREQUENCY (Corresponding to Type Numbers in previous column) (Hz)	(Hz)	(Hz)	(Hz)	(Hz)	(Hz)	TYP. CAP. 1 CAP. Cj (F)	2 at TEST VOLT (V)	CAPACITANCE RANGE (for V = 0 to PIV) Ø - at TEST VOLT. (pF)	PIV (V)	Q FACTOR MIN. Q	at TEST FREQ (Hz)	MAX. SER RES. Rs (Ω)	MAX. DISS. @ 25°C (W)	DESCRIPTION MAT.	DWG. No.
1	VA213	50G						6.5p	4.0	15 8 - 1 6	150	100	.05G	4.9	.50	Si$	A131
2	VA312							6.5p	4 0	5 7;2.0-200V$	200	75	50M		500m	Si$	DO14△
3	VA313							6.5p	4 0	5.7;2.0-200V$	200	100	50M		500m	Si$	DO14△
4	VH107	30GØ						6 5p△	4 0	3.5$	25 $	150	50G	3 3	500m	Si$	DO14
5	VH138	15GØ						6.5p△	4.0	3.5$	25 $	75	50G	6.5	500m	Si$	DO14
6	VH139	40GØ						6 5p△	4.0	4.0$	50 $	150	50G	3 3	500m	Si$	DO14
7	VH140	30GØ						6.5p△	4.0	4 0$	80 $	75	50G	6.5	500m	Si$	DO14
8	VH141	50GØ						6 5p△	4.0	4.8$	100 $	125	50G	4.0	500m	Si$	DO14
9	VH160	30GØ						6.5p△	4.0	4.8$	100 $	75	50G	6.5	500m	Si$	DO14
10	VH167	50GØ						6.5p△	4 0	4 0$	80 $	125	50G	4.0	500m	Si$	DO14
11	VH175	20GØ						6.5p△	4.0	4.0$	50 $	75	50G	6.5	500m	Si$	DO14
12	VH183	30GØ						6.5p△	4.0	3.5$	25 $	150	50M	3.3	500m	Si$	DO14
13	VH191	70GØ						6.5p△	4.0	4 0$	80 $	200	50M	1.6	500m	Si$	DO14
14	VH200	50GØ						6.5p△	4.0	5.5$	150 $	100	50M	4.9	500m	Si$	DO14
15	VH201	35GØ						6.5p△	4.0	5.5$	150 $	60	50M	8.2	500m	Si$	DO14
16	VH225	40GØ						6 5p△	4.0	6.2$	200 $	50	50M	9 8	500m	Si$	DO14
17	VVC417,A,B,C,D							6.5p%	4 0	5.0 - 8.0Ø	25	75	.05G			Si	DO7
18	VVC418,A,B,C,D							6.5p%	4 0	5.0 - 8.0Ø	80	75	.05G			Si	DO7
19	VVC419,A,B,C,D							6.5p%	4 0	5.0 - 8.0Ø	100	125	.05G			Si	DO7
20	MA43001							6.5p⊘	10	2 5-6.5Ø	75 ⊘				8.7 ⊘	Si$△	M465
21	MA4273B							6.6p	4.0	5 2 - 8.0Ø	110	100	.05G		.50	Si	A31e
22	MV2201							6.7p$	4.0	5.5-8 0Ø†	25 ⊘	300	50M		280m	Si	C103
23	1N4786,A,B,C,D							6 8p%	4 0	2.56;0-4 0V$	25 $	15	50M		500m	Si	DO14
24	1N4801,A,B,C,D							6.8p%	4.0	2.56;0-4.0V$	100 $	15	50M		500m	Si	DO14
25	JAN1N4801A,B							6 8p%	4.0	2 56,.10-40V$	100 $	15	50M		500m	Si	A1dd
26	1N5139,A							6.8p%△	4.0	2.7;4.0V-60V$	60 ⊘	350	50M		400m	Si	DO7
27	JAN1N5139A							6.8p	4 0	6.46 - 7.14Ø	65 ⊘	350	50m		.40	Si	DO7
28	1N5441							6.8p%	4 0	2.5;2V-30V$	30	450	50M		400m	Si	DO7
29	1N5441A							6.8p%	4.0	2.5;2V-30V$	30	450	50M		400m	Si	DO7
30	1N5441B							6.8p%	4.0	2.5;2V-30V$	30	450	50M		400m	Si	DO7
31	1N5441C							6.8p%	4 0	2.5;2V-30V$	30	450	50M		400m	Si	DO7
32	1N5441D							6.8p%	4 0	2.5;2V-30V$	30	450	50M		400m	Si	DO7
33	1N5461							6.8p%	4 0	2 7;2V-30V$	30	600	50M		400m	Si	DO7
34	1N5461A							6 8p%	4 0	2.7;2V-30V$	30	600	50M		400m	Si	DO7
35	1N5461B							6.8p%	4 0	2.7;2V-30V$	30	600	50M		400m	Si	DO7
36▼	JAN1N5461B							6.8p	4.0	6.46-7.14Ø	30 ⊘	600	50M		400m	Si	DO7
37	1N5461C							6.8p%	4.0	2.7;2V-30V$	30	600	50M		400m	Si	DO7
38	1N5461D							6.8p%	4.0	2.7;2V-30V$	30	600	50M		400m	Si	DO7
39	1N5681,A,B							6.8p%	4.0	3.70;2.0V-40V$	40 $	600	50M		400m	*	DO7
40	1N5693,A,B							6.8p%	4.0	3.95;2.0V-40V$	40 $	250	50M		400m	*	DO7
41	1N5696,A,B							6.8p%	4.0	3 35;4.0V-60V$	60 $	450	50M		400m	*	DO7
42#	BBY17							6.8p†	4.0	7.6;2.0V-100V$	100	100	50M		500m	Si	DO7
43	CV1864B							6.8p	4 0	6.10-7.50	60	300	100M		5.0	Si	F27x⊘
44	CV1864D							6.8p	4 0	6.10-7.50	60	300	100M		5.0	Si	F56n⊘
45▼	CV5007							6 8p	4 0	2 5;2.0V-30V$	30	450	50M		400m	Si	DO7
46	D1720,B,C							6.8p†%	4 0	6 1-7.5Ø	30 ⊘	500	50M		400m	Si#$	A1st
47	D6902							6.8p	4 0	2.8;2-30V$	30	600	50M		40	Si$	DO7
48#	DC4210							6.8p	4.0		60	250	50M			Si	M524
49	DE1720A							6.8p†	4.0	6.1-7.5Ø	30 ⊘	1.0k	50M		4.0		F77
50	DEP1720A							6.8p†	4.0	6.1-7 5Ø	30 ⊘	1.0k	50M		4.0		F78
51	E607							6.8p	4.0		60	500	50M			Si	
52	E707							6.8p	4.0		60	1.0k	50M			Si	
53	E1720A							6.8p†	4.0	6.1-7.5	30	1.0k	50M		4.0		F10k
54	EP1720A							6.8p†	4.0	6.1-7.5	30	1.0k	50M		4.0		F27ac
55	FV1006,A,B,C,D							6.8p%	4.0	5 1$	65 ⊘	150	.05G		.40	Si#	A1ce
56	FV1106,A,B,C,D							6 8p%	4.0	5 7$	110 ⊘	150	50M		400m	Si#	A1ce
57	G106,A,B							6.8p%	4.0		25	100 Ø	50M		500m	Si$	A60j
58	G206,A,B							6.8p%	4.0		25	200 Ø	50M		500m	Si$	A60j
59	G306,A,B							6.8p%	4.0		25	300 Ø	50M		500m	Si$	A60j
60	G406,A,B							6.8p%	4.0		25	400 Ø	50M		500m	Si$	A60j
61	G506⊘,A,B							6.8p%	4.0		25	500 Ø	50M		500m	Si$	A60j
62	G606,A,B							6.8p%	4.0		25	600 Ø	50M		500m	Si$	A60j
63	G060007-1R							6.8p	4.0	4 8,1.0-60V$	60	400 Ø	50M			Si	DO7
64	G060007-2R							6 8p	4.0		60	800 Ø	50M			Si	DO7
65	GC1711	50G						6 8p$	4.0	6.5;0.0V-60V$	60 ⊘	1.0k	50M				F27w
66	GC1761							6.8p	4.0	2.2-20	60	1000	50M		300m	Si	A1n
67	IC56-30,A,B,C							6 8p%	4.0	14.000-3.000	50	300	50M		500m	Si	M214a
68	IC106-30,A,B,C							6.8p%	4 0	14 000-2.000	100	300	50M		500m	Si	M214a
69	KV5139							6.8p	4.0	2.8,4.0V-60V$	90	350	50M		400m	Si	DO7
70	MA45033							6.8p†	4.0	2.5;2.0-30V$	35 ⊘	800	50G		400m	Si$	A31e
71	MC100,A,B							6.8p%	4.0	4.6;2 0-100V$	110 ⊘	150	50M		500m	Si#$	A1ce
72	MC106,A,B							6 8p%	4.0	4.0,2 0-75V$	85 ⊘	150	50M		500m	Si#$	A1ce
73	MC112,A,B							6.8p%	4.0	3.0;2.0-40V$	50 ⊘	150	50M		500m	Si#$	A1ce
74	MV1620							6.8p$	4 0	6.1 - 7.5Ø	20 ⊘	300	.05G		.40	Si$	DO7
75	MV1720A							6.8p	4.0		30 ⊘	500	50M		400m	Si△#	DO7
76	MV1864A							6 8p†	4 0	6.1 - 7.5Ø	60			.80	5.0	Si	F27a
77	MV1864B							6.8p†	4.0	6.1 - 7.5Ø	60			.80	5.0	Si	F10a
78	MV1864D							6.8p†	4.0	6.1 - 7.5Ø	60			.80	5 0	Si	F56e
79	MV2101							6.8p$	4.0	6.1-7.5Ø	30	450	50M		280m	Si	C103
80	P060007-1R							6.8p	4.0	4.8;1.0-60V$	60	400 Ø	50M			Si	F27ad
81	P060007-2R							6 8p	4 0	4.8;1.0-60V$	60	800 Ø	50M			Si	F27ad
82	PC107,A,B							6.8p%	4.0	4.5;.50-30V$	30 $	75	100M			Si*	DO14△
83	PC138,A,B							6.8p%	4 0	4.5;.50-30V$	30 $	38	100M			Si*	DO14△
84	PC139,A,B							6.8p%	4.0	5 7;.50-50V$	50 $	75	100M			Si*	DO14△
85	PC140,A,B							6.8p%	4.0	6.8;.50-80V$	80 $	38	100M			Si*	DO14△
86	PC141,A,B							6.8p%	4 0	7.6;.50-100V$	100 $	68	100M			Si*	DO14△
87	PC202							6.8p△	4.0	2.4;.10-4.0V$	100 $	175	50M		500m	Si*	DO14
88	PC203							6 8p△	4.0	2.4,.10-4.0V$	75 $	175	50M		500m	Si*	DO14
89	PC204							6 8p△	4.0	2.4;.10-4.0V$	50 $	175	50M		500m	Si*	DO14
90	PC205							6.8p△	4.0	2 4;.10-4.0V$	30 $	175	50M		500m	Si*	DO14
91	PC207							6 8p△	4.0	2.4;.10-4.0V$	125 $	150	50M		500m	Si*	DO14
92	PC208							6 8p△	4.0	2.4;.10-4.0V$	100 $	150	50M		500m	Si*	DO14
93	PC209							6 8p△	4.0	2.4;.10-4.0V$	75 $	150	50M		500m	Si*	DO14
94	PC210							6.8p△	4.0	2.4; 10-4.0V$	50 $	150	50M		500m	Si*	DO14
95	PC211							6.8p△	4.0	2.4;.10-4.0V$	30 $	150	50M		500m	Si*	DO14
96	PC212							6 8p△	4.0	2 4;.10-4.0V$	150 $	125	50M		500m	Si*	DO14
97	PC213							6.8p△	4.0	2.4;.10-4.0V$	125 $	125	50M		500m	Si*	DO14
98	PC214							6 8p△	4.0	2.4;.10-4.0V$	100 $	125	50M		500m	Si*	DO14
99	PC215							6.8p△	4.0	2.4;.10-4.0V$	75 $	125	50M		500m	Si*	DO14
100	PC216							6 8p△	4.0	2 4; 10-4.0V$	50 $	125	50M		500m	Si*	DO14
101	PC217							6.8p△	4.0	2.4; 10-4.0V$	30 $	125	50M		500m	Si*	DO14
102	PC218							6.8p△	4.0	2.4;.10-4.0V$	150 $	100	50M		500m	Si*	DO14
103	PC219							6 8p△	4.0	2.4;.10-4.0V$	125 $	100	50M		500m	Si*	DO14
104	PC220							6.8p△	4.0	2.4,.10-4.0V$	100 $	100	50M		500m	Si*	DO14
105	PC221							6.8p△	4.0	2.4;.10-4.0V$	75 $	100	50M		500m	Si*	DO14
106	PC222							6.8p△	4 0	2.4; 10-4.0V$	50 $	100	50M		500m	Si*	DO14
107	PC223							6.8p△	4.0	2.4; 10-4.0V$	30 $	100	50M		500m	Si*	DO14
108	PC224							6 8p△	4.0	2.4;.10-4.0V$	150 $	75	50M		500m	Si*	DO14
109	PC225							6.8p△	4.0	2 4,.10-4.0V$	125 $	75	50M		500m	Si*	DO14
110	PC226							6.8p△	4.0	2.4; 10-4.0V$	100 $	75	50M		500m	Si*	DO14

SYMBOLS AND CODES EXPLAINED IN INTERPRETER

10 VOLTAGE VARIABLE CAPACITORS & VARACTOR DIODES

IN ORDER OF (1) TYPICAL CAPACITANCE, (2) TEST VOLTAGE, and (3) TYPE No.

LINE No.	3 TYPE No.	MINIMUM CUTOFF FREQUENCY (Corresponding to Type Numbers in previous column) (Hz)	(Hz)	(Hz)	(Hz)	(Hz)	(Hz)	TYP. CAP. 1 CAP. Cj (F)	2 at TEST VOLT (V)	CAPACITANCE RANGE (for V = 0 to PIV) Ø - at TEST VOLT. (pF)	PIV (V)	Q FACTOR MIN. Q	at TEST FREQ (Hz)	MAX. SER. RES. Rs (Ω)	MAX. DISS. @ 25°C (W)	DESCRIPTION MAT.	DWG. No.
1	PC227							6.8pΔ	4.0	2 4;.10-4.0V$	75 $	75	50M		500m	Si*	DO14
2	PC228							6 8pΔ	4 0	2.4;.10-4.0V$	50 $	75	50M		500m	Si*	DO14
3	PC229							6 8pΔ.	4.0	2.4;.10-4 0V$	30 $	75	50M		500m	Si*	DO14
4	PC230							6 8pΔ	4 0	2 4;.10-4.0V$	150 $	50	50M		500m	Si*	DO14
5	PC231							6 8pΔ	4.0	2.4,.10-4.0V$	125 $	50	50M		500m	Si*	DO14
6	PC232							6 8pΔ	4.0	2.4;.10-4.0V$	100 $	50	50M		500m	Si*	DO14
7	PC233							6.8pΔ	4.0	2.4; 10-4.0V$	75 $	50	50M		500m	Si*	DO14
8	PC234							6.8pΔ	4 0	2.4;.10-4.0V$	50 $	50	50M		500m	Si*	DO14
9	PC235							6.8pΔ	4.0	2.4,.10-4 0V$	30 $	50	50M		500m	Si*	DO14
10▼	PG107,A,B							6.8p%	4 0	4 4;2.0V-65V$	65 $	100	100M				DO7
11▼	PG207,A,B							6 8p%	4 0	4.3;2.0V-65V$	65 $	100	100M				DO7
12▼	PG307,A,B							6.8p%	4.0	3.8;2.0V-50V$	50 $	150	100M				DO7
13	PV1864D							6.8pΔ	4 0	2.9;4 0V-60V$	60 $	300	100M		2.0	*	F56j
14	PVM4068,A,B							6.8p%	4.0	7.20;0.0V-40V$	40 $	90	1 0G		2 0	*	F56j
15	PVM6068,A,B							6 8p%	4 0	8 55,0.0V-60V$	60 $	60	1 0G		2.0	*	F56j
16	SQ1220A,B,C							6.8p$%	4.0		30 ☑	1 0k	50M		250m	Si#$	A1ah
17	SQ1270A,B,C							6.8p$%	4 0		30 ☑	500	50M		250m	Si#$	A1ah
18	SQ1720,B,C							6 8p$%	4.0	6.1-7 5Ø	30 ☑	1.0k	50M		500m	Si#$	DO7
19	SQ5441A							6 8p%	4 0		30 ☑	450	50M		400m		DO7
20	SQ5441B							6.8p%	4 0		30 ☑	450	50M		400m		DO7
21	SQ5441C							6.8p%	4.0		30 ☑	450	50M		400m		DO7
22	SQ5461A							6 8p%	4 0		30 ☑	600	50M		400m		DO7
23	SQ5461B							6.8p%	4.0		30 ☑	600	50M		400m		DO7
24	SQ5461C							6 8p%	4 0		30 ☑	600	50M		400m		DO7
25	VA5139							6 8p	4.0	6.1-7 5	90	350	50M		400m	Si	DO7
26	VA5139A							6 8p	4 0	6 5-7 1	90	350	50M		400m	Si	DO7
27	VG107,A,B,C,D							6 8p%	4.0	4 4,2V- 65V$	70	200	05G		40	Si$	DO7
28	VG207,A,B,C,D							6.8p%	4.0	4 3;2V- 65V$	70	200	.05G		40	Si$	DO7
29	VG307,A,B,C,D							6.8p%	4.0	3 9,2V- 50V$	55	300	05G		40	Si$	DO7
30	VM200,A,B,C,D							6.8p%	4.0	4.5;4V-150V$	165	175			50	Si$	DO14
31	VM201,A,B,C,D							6 8p%	4.0	4 3;4V-125V$	138	175			.50	Si$	DO14
32	VM202,A,B,C,D							6 8p%	4.0	4.0;4V-100V$	110	175			50	Si$	DO14
33	VM203,A,B,C,D							6 8p%	4.0	3.3;4V- 75V$	83	175			.50	Si$	DO14
34	VM204,A,B,C,D							6.8p%	4.0	2 8;4V- 50V$	55	175			50	Si$	DO14
35	VM205,A,B,C,D							6.8p%	4 0	2.2;4V- 30V$	33	175			50	Si$	DO14
36	VM206,A,B,C,D							6.8p%	4 0	4.5;4V-150V$	165	150			50	Si$	DO14
37	VM207,A,B,C,D							6.8p%	4 0	4.3,4V-125V$	138	150			50	Si$	DO14
38	VM208,A,B,C,D							6.8p%	4.0	4.0;4V-100V$	110	150			50	Si$	DO14
39	VM209,A,B,C,D							6.8p%	4.0	3 3,4V- 75V$	83	150			.50	Si$	DO14
40	VM210,A,B,C,D							6 8p%	4 0	2.8;4V- 50V$	55	150			.50	Si$	DO14
41	VM211,A,B,C,D							6.8p%	4 0	2 2;4V- 30V$	33	150			.50	Si$	DO14
42	VM212,A,B,C,D							6 8p%	4.0	4.5;4V-150V$	165	125			50	Si$	DO14
43	VM213,A,B,C,D							6.8p%	4.0	4.3;4V-125V$	138	125			50	Si$	DO14
44	VM214,A,B,C,D							6 8p%	4.0	4.0;4V-100V$	110	125			.50	Si$	DO14
45	VM215,A,B,C,D							6.8p%	4 0	3 3,4V- 75V$	83	125			50	Si$	DO14
46	VM216,A,B,C,D							6.8p%	4.0	2 8;4V- 50V$				50		Si$	DO14
47	VM217,A,B,C,D							6 8p%	4 0	2.2;4V- 30V$	33	125			50	Si$	DO14
48	VM218,A,B,C,D							6 8p%	4 0	4 0,4V-150V$	165	100			50	Si$	DO14
49	VM219,A,B,C,D							6 8p%	4.0	4.3,4V-125V$	138	100			50	Si$	DO14
50	VM220,A,B,C,D							6 8p%	4 0	4 0;4V-100V$	110	100			50	Si$	DO14
51	VM221,A,B,C,D							6.8p%	4 0	3.3;4V- 75V$	83	100			50	Si$	DO14
52	VM222,A,B,C,D							6 8p%	4 0	2 8;4V- 50V$	55	100			50	Si$	DO14
53	VM223,A,B,C,D							6 8p%	4.0	2 2,4V- 30V$	33	100			50	Si$	DO14
54	VM224,A,B,C,D							6.8p%	4 0	4 5;4V-150V$	165	75			50	Si$	DO14
55	VM225,A,B,C,D							6 8p%	4 0	4 3,4V-125V$	138	75			50	Si$	DO14
56	VM226,A,B,C,D							6.8p%	4 0	4 0,4V-100V$	110	75			50	Si$	DO14
57	VM227,A,B,C,D							6 8p%	4 0	3 3;4V- 75V$	83	75			50	Si$	DO14
58	VM228,A,B,C,D							6 8p%	4.0	2 8,4V- 50V$	55	75			50	Si$	DO14
59	VM229,A,B,C,D							6.8p%	4.0	2 2,4V- 30V$	33	75			50	Si$	DO14
60	VM230,A,B,C,D							6.8p%	4.0	4 5,4V-150V$	165	50			50	Si$	DO14
61	VM231,A,B,C,D							6.8p%	4 0	4.3,4V-125V$	138	50			50	Si$	DO14
62	VM232,A,B,C,D							6 8p%	4.0	4 0,4V-100V$	110	50			50	Si$	DO14
63	VM233,A,B,C,D							6.8p%	4 0	3.3,4V- 75V$	83	50			50	Si$	DO14
64	VM234,A,B,C,D							6 8p%	4 0	2 8,4V- 50V$	55	50			50	Si$	DO14
65	VM235,A,B,C,D							6 8p%	4.0	2 2;4V- 30V$	33	50			50	Si$	DO14
66	VVC700,A,B,C,D							6 8p%	4 0		30	38	100M			Si	DO7
67	VVC701,A,B,C,D							6.8p%	4 0		30	75	100M			Si	DO7
68	VVC702,A,B,C,D							6 8p%	4 0		50	75	100M			Si	DO7
69	VVC703,A,B,C,D							6 8p%	4 0		80	38	100M			Si	DO7
70	VVC721,A,B,C,D							6.8p%	4 0		100	68	100M			Si	DO7
71	VVC726,A,B,C,D							6.8p%	4.0		20	300	50M			Si	DO7
72	VVC1003,A,B,C,D							6 8p%	4.0		60	350	50M			Si	DO7
73#	ZC700							6 8p†	4.0	2 8;2 0V-30V$	30	500	50M		400m	Si	DO7
74#	BXY11E							7 0p	0.0	5 0 - 10Ø	65			1.0		Si$§	S286
75#	BXY14E							7 0p	0 0	5.0 - 10Ø	65			1 0		Si$§	DO19
76	MC7Δ							7.0p	4 0	5 6-8.4	60 †	10	50k			Si	A1au
77	MC407							7.0p	4 0		60 †	100	50M			Si	A1au
78	MV7,A							7.0p	4 0	±1.4,± 70Ø	25	13	05G		25	Si	A109
79	MV7E,A	15G						7 0p	4 0	±1 4,± 70Ø	100	3.0	05G		25	Si	A109
80	PC0600A							7 0p$Δ	4 0		30 $	200	50M				DO7
81	PC0600B							7 0p$Δ	4.0		30 $	300	50M				DO7
82	PC0600C							7 0p$Δ	4 0		30 $	400	50M				DO7
83	PC0600D							7 0p$Δ	4 0		30 $	500	50M				DO7
84	PC0610A							7 0p$Δ	4 0		60 $	200	50M				DO7
85	PC0610B							7 0p$Δ	4 0		60 $	300	50M				DO7
86	PC0610C							7.0p$Δ	4 0		60 $	400	50M				DO7
87	PC0620A							7 0p$Δ	4.0		90 $	200	50M				DO7
88	PC0620B							7 0p$Δ	4 0		90 $	300	50M				DO7
89	PC0620C							7 0p$Δ	4.0		90 $	400	50M				DO7
90	PC0630A							7 0p$Δ	4 0		120 $	200	50M				DO7
91	PC0630B							7 0p$Δ	4.0		120 $	300	50M				DO7
92	PC0640A							7 0p$Δ	4 0		150 $	200	50M				DO7
93	PC1400A							7 0p$Δ	4.0		30 $	200	50M				A2u
94	PC1400B							7 0p$Δ	4 0		30 $	300	50M				A2u
95	PC1400C							7.0p$Δ	4.0		30 $	400	50M				A2u
96	PC1400D							7 0p$Δ	4 0		30 $	500	50M				A2u
97	PC1410A							7 0p$Δ	4.0		60 $	200	50M				A2u
98	PC1410B							7 0p$Δ	4 0		60 $	300	50M				A2u
99	PC1410C							7 0p$Δ	4.0		60 $	400	50M				A2u
100	PC1420A							7 0p$Δ	4.0		90 $	200	50M				A2u
101	PC1420B							7.0p$Δ	4 0		90 $	300	50M				A2u
102	PC1420C							7 0p$Δ	4 0		90 $	400	50M				A2u
103	PC1430A							7.0p$Δ	4.0		120 $	200	50M				A2u
104	PC1430B							7 0p$Δ	4 0		120 $	300	50M				A2u
105	PC1440A							7 0p$Δ	4 0		150 $	200	50M				A2u
106	PC2600A							7 0p$Δ	4 0		30 $	200	50M				DO7
107	PC2600B							7 0p$Δ	4 0		30 $	300	50M				DO7
108	PC2600C							7 0p$Δ	4 0		30 $	400	50M				DO7
109	PC2600D							7 0p$Δ	4 0		30 $	500	50M				DO7
110	PC2610A							7.0p$Δ	4.0		60 $	200	50M				DO7

SYMBOLS AND CODES EXPLAINED IN INTERPRETER

10 VOLTAGE VARIABLE CAPACITORS & VARACTOR DIODES

IN ORDER OF (1) TYPICAL CAPACITANCE, (2) TEST VOLTAGE, and (3) TYPE No.

LINE No	3 TYPE No	MINIMUM CUTOFF FREQUENCY (Corresponding to Type Numbers in previous column) (Hz)	(Hz)	(Hz)	(Hz)	(Hz)	(Hz)	TYP CAP. 1 CAP Cj (F)	2 at TEST VOLT (V)	CAPACITANCE RANGE (for V = 0 to PIV) Ø - at TEST VOLT. (pF)	PIV (V)	Q FACTOR MIN Q	at TEST FREQ (Hz)	MAX. SER. RES. Rs (Ω)	MAX. DISS @ 25°C (W)	DESCRIPTION MAT.	DWG. No
1	PC2610B							7 0p§△	4 0		60 $	300	50M				DO7
2	PC2610C							7 0p§△	4 0		60 $	400	50M				DO7
3	PC2610D							7 0p§△	4.0		60 $	500	50M				DO7
4	PC2620A							7 0p§△	4 0		90 $	200	50M				DO7
5	PC2620B							7.0p§△	4 0		90 $	300	50M				DO7
6	PC2620C							7 0p§△	4 0		90 $	400	50M				DO7
7	PC2620D							7 0p§△	4.0		90 $	500	50M				DO7
8	PC2630A							7 0p§△	4 0		120 $	200	50M				DO7
9	PC2630B							7.0p§△	4 0		120 $	300	50M				DO7
10	PC2630C							7 0p§△	4 0		120 $	400	50M				DO7
11	PC2630D							7 0p§△	4 0		120 $	500	50M				DO7
12	PC2640A							7 0p§△	4.0		150 $	200	50M				DO7
13	PC2640B							7.0p§△	4 0		150 $	300	50M				DO7
14	PC2640C							7 0p§△	4 0		150 $	400	50M				DO7
15	PV1430							7 0p§	4 0		120	400	50M				A2u
16	TIV306							7 0p	4.0	5 0-9 0Ø	20	200	50M		250m	Si#	DO35
17	V7Ø,AØ,BØ							7 0p	4.0	±2,1, 50Ø	25	13	05G		50	Si*	DO14
18	V7%,A%,B%,C,D							7 0p%	4 0	3.0-18	25 $	15	50M		500m		A1st
19	V7EΔ,EAΔ,EBΔ,EC,ED							7 0p%	4 0	1 5-18	100 $	7 0	50M		500m	Si$	DO14
20	V7EØ,EAØ,EBØ							7 0p%	4.0	±2 0;1.0..50Ø	100	3 0	50M		500m	Si*	DO14
21	V907Δ,AΔ,BΔ,CΔ,DΔ							7 0p%	4.0	3.0 - 18	25 $	15	05G		50	Si$	DO14
22#	V907Ø,AØ,BØ							7 0p	4 0	±2,1, 50Ø	25	15	50M		500m	Si*	DO14
23	V907%,A%,B%,C%,D%							7 0p%	4 0	3.0-18	25 $	15	50M		500m		A1st
24	V907EΔ,EAΔ,EBΔ,EC,ED																
								7 0p%	4 0	1.5-18	100 $	7 0	50M		500m	Si$	DO14
25	V907EØ,EAØ,EBØ							7 0p%	4 0	±2 0,1 0,.50Ø	100	15	50M		500m	Si*	DO14
26	VC7,A,B							7.0p%	4 0	2 2 - 18	50 $	10	.05G				DO7
27	VC207,A,B							7.0p%	4.0	2 2 - 18	50 $	25	.05G				DO7
28	VC306,A,B							7 0p%	4 0	3.0,1V-25V$	25 $	50	.05G				DO7
29	VC307,A,B							7.0p%	4 0	4 0;2V-80V$	80 $	50	.05G				DO7
30	VC406,A,B							7 0p%	4 0	3.0;1V-25V$	25 $	100	.05G				DO7
31	VC407,A,B							7 0p%	4 0	4 0;1V-50V$	50 $	100	.05G				DO7
32	VC408,A,B							7.0p%	4 0	4 0;2.0-80V$	100 $	100	50M				DO7
33	VC607,A,B							7 0p%	4 0	3 0;1V-25V$	40 $	200	.05G				DO7
34	VC608,A,B							7.0p%	4 0	3 0,1V-25V$	40 $	300	.05G			Si	DO7
35	VC821,A,B							7 0p%	4.0	3.0 - 18	25 $	13	05G				DO7
36	VC841,A,B							7 0p%	4 0	1 5 - 18	100 $	3.0	50M				DO7
37	VH7							7 0pΔ	4.0	18 - 3 0	25 $	13	.05G		50	Si$	DO14
38	VH7E							7.0pΔ	4 0	18 - 1.5	100 $	3.0	50M		500m	Si$	DO14
39	VH907							7 0pΔ	4.0	18 - 3.0	25 $	13	.05G		50	Si$	DO14
40	VH907E							7 0pΔ	4.0	18 - 1.5	100 $	3 0	50M		500m	Si$	DO14
41	VVC201,A,B,C,D							7 0p%	4.0		25	13	50M		500m	Si	DO7
42	VVC202,A,B,C,D							7 0p%	4.0		100	3 0	50M		500m	Si	DO7
43	VVC704,A,B,C,D							7.0p%	4 0		25	15	50M		500m	Si	DO7
44	VVC722,A,B,C,D							7 0p%	4 0		100	15	50M		500m	Si	DO7
45	VVC789,A,B,C,D							7.0p%	4.0		60	10	50M		500m	Si	DO7
46	VVC790,A,B,C,D							7 0p%	4.0		50	10	50M		500m	Si	DO7
47	VVC791,A,B,C,D							7 0p%	4.0		50	25	50M		500m	Si	DO7
48	VVC792,A,B,C,D							7 0p%	4 0		60	100	50M			Si	DO7
49	VVC793,A,B,C,D							7 0p%	4 0		80	50	50M			Si	DO7
50	VVC846,A,B,C,D							7 0p%	4 0		100	100	50M			Si	DO7
51	VVC847,A,B,C,D							7 0p%	4 0		30	100	50M			Si	DO7
52	VVC848,A,B,C,D							7 0p%	4 0		40	200	50M			Si	DO7
53	VVC849,A,B,C,D							7 0p%	4.0		60	100	50M			Si	DO7
54	MA4963B,C	50G						7 0pØ	6.0	4.0 - 7.0Ø	80 Ø				7 0	Si	Z48
55#	SV287D							7 0p	6 0	4 0-10Ø	240				11	Si	S312
56#	BSC52							7.0pØ	60		80			3.0	12	Si	S11d
57▼	SV220	1 0G						7 0p	60	6.0-8 0	100 Ø			150mØ	20	Si	S358
58	SD11D48							7 2p	0.0	7.2 - 14	48			1.5		Si	P3
59	SD12D48							7.2p	0 0	7.2 - 14	48			1 5		Si	F3a
60	SD22D48							7 2p	0 0	7.2 - 14	48			1.5		Si	F11
61	SD32D48							7 2p	0 0	7.2 - 14	48			1 5		Si	F21
62	SD42D48							7.2p	0 0	7 2 - 14	48			1 5		Si	F9a
63	SDGPD48							7.2p	0 0	7 2 - 14	48			1 5		Si	DO7
64	MA4060D							7 5p	0 0	5 0 - 10	90			3.5		Si	S4d
65	MA4061D							7.5p	0 0	5 0 - 10	140			3.5		Si	S4d
66	MA4062D							7.5p	0.0	5.0 - 10Ø	70				10	Si	S4d
67	MA4099D							7.5p	0.0	5 0 - 10Ø	60			2 0		Si*	Z23
68	MA4760D							7 5p	0 0	5.0 - 10Ø	90			3.5		Si	Z23
69	MA4761D							7.5p	0.0	5 0 - 10Ø	120			3.5		Si	Z23
70	SD11D12							7 5p	0.0	7 5 - 15	12			1 3		Si	P3
71	SD12D12							7.5p	0.0	7.5 - 15	12			1.3		Si	F3a
72	SD22D12							7 5p	0.0	7.5 - 15	12			1 3		Si	F11
73	SD32D12							7.5p	0.0	7 5 - 15	12			1 3		Si	F21
74	SD42D12							7.5p	0.0	7.5 - 15	12			1.3		Si	F9a
75	SDGPD12							7 5p	0.0	7 5 - 15	12			1.3		Si	DO7
76	NPQ300							7.5p	4.0	5 0 - 10Ø	15	200	.05G		.25	Si	DO7
77	L8567	40						7 5pØ	6.0	6.0 - 10Ø	150 Ø				19	SiΔ$	F49c
78	SD11D60							7 6p	0.0	7 6 - 14	60			1.5		Si	P3
79	SD12D60							7 6p	0.0	7 6 - 14	60			1.5		Si	F3a
80	SD22D60							7 6p	0 0	7 6 - 14	60			1.5		Si	F11
81	SD32D60							7 6p	0 0	7 6 - 14	60			1 5		Si	F21
82	SD42D60							7 6p	0.0	7 6 - 14	60			1.5		Si	F9a
83	SDGPD60							7 6p	0.0	7.6 - 14	60			1.5		Si	DO7
84#	BXY19E							8.0p	0.0	5 0 - 10Ø	80 Ø			50	8 0	Si	
85	SD11E90							8 0p	0 0	8 0 - 15	90			1 5		Si	P3
86	SD11E100							8.0p	0.0	8.0 - 15	100			1.5		Si	P3
87	SD12E90							8 0p	0 0	8 0 - 15	90			1.5		Si	F3a
88	SD12E100							8 0p	0 0	8.0 - 15	100			1 5		Si	F3a
89	SD22E90							8 0p	0.0	8.0 - 15	90			1.5		Si	F11
90	SD22E100							8.0p	0 0	8.0 - 15	100			1 5		Si	F11
91	SD32E90							8 0p	0.0	8 0 - 15	90			1 5		Si	F21
92	SD32E100							8.0p	0 0	8.0 - 15	100			1.5		Si	F21
93	SD42E90							8.0p	0 0	8.0 - 15	90			1 5		Si	F9a
94	SD42E100							8 0p	0.0	8.0 - 15	100			1 5		Si	F9a
95	SDGPE90							8.0p	0.0	8.0 - 15	90			1.5		Si	DO7
96	SDGPE100							8.0p	0.0	8 0 - 15	100			1 5		Si	DO7
97#	SV87A							8 0p	0 0	5.0 - 10Ø	90			3 5	20	Si	S201
98#	SV88A							8.0p	0.0	5 0 - 10Ø	140			3 5	20	Si	S201
99#	1S1501							8.0p	4 0		15	150	50M			Si$	A1ce
100	MS3145,6,7	10G	20G	40G				8 0p	6.0	6.0 - 10	30				1 5	GA	P3
101	MS3190,1,2	10G	20G	40G				8.0p	6 0	6 0 - 10	45				1.5	GA	P3
102	MS3230,1	10G	20G					8.0p	6 0	6 0 - 10	60				1.5	GA	P3
103	MS3280,1,2	10G	20G	40G				8.0p	6.0	6.0 - 10	18				1.5	GA	P3
104	MS4180,1,2	10G	20G	40G				8.0p	6.0	6 0 - 10Ø	18		Ø 10G		1.5	GA	F27d
105	MS4230,1,2	10G	20G	40G				8 0p	6.0	6 0 - 10Ø	30		Ø 10G		1.5	GA	F27d
106	MS4280,1,2	10G	20G	40G				8 0p	6.0	6.0 - 10Ø	45		Ø 10G		1 5	GA	F27d
107	MS4330,1	10G	20G					8.0p	6 0	6.0 - 10Ø	60		Ø 10G		1.5	GA	F27d
108	1N4787,A,B,C,D							8 2p%	4.0	2.56;0.0-4.0V$	25 $	15	50M		500m	Si	DO14
109	1N4802,A,B,C,D							8.2p	4.0	2.58;0-4 0V$	100 $	15	50M		500m	Si	DO14

SYMBOLS AND CODES EXPLAINED IN INTERPRETER

10 VOLTAGE VARIABLE CAPACITORS & VARACTOR DIODES

IN ORDER OF (1) TYPICAL CAPACITANCE, (2) TEST VOLTAGE, and (3) TYPE No.

LINE No.	3 TYPE No.	MINIMUM CUTOFF FREQUENCY (Corresponding to Type Numbers in previous column) (Hz)	(Hz)	(Hz)	(Hz)	(Hz)	(Hz)	TYP. CAP. 1 CAP. Cj (F)	2 at TEST VOLT (V)	CAPACITANCE RANGE (for V = 0 to PIV) Ø - at TEST VOLT. (pF)	PIV (V)	Q FACTOR MIN. Q	at TEST FREQ (Hz)	MAX. SER. RES. Rs (Ω)	MAX. DISS. @ 25°C (W)	DESCRIPTION MAT.	DWG. No.
1	JAN1N4802A,B							8.2p	4.0	2.58, 10-40V$	100 $	15	50M		500m	Si	A1dd
2	1N5442							8.2p%	4.0	2 5;2V-30V$	30	450	50M		400m	Si	DO7
3	1N5442A							8.2p%	4 0	2.5,2V-30V$	30	450	50M		400m	Si	DO7
4	1N5442B							8.2p%	4.0	2.5;2V-30V$	30	450	50M		400m	Si	DO7
5	1N5442C							8.2p%	4 0	2 5;2V-30V$	30	450	50M		400m	Si	DO7
6	1N5442D							8.2p%	4.0	2.5;2V-30V$	30	450	50M		400m	Si	DO7
7	1N5462							8.2p%	4 0	2.8;2V-30V$	30	600	50M		400m	Si	DO7
8	1N5462A							8.2p%	4.0	2.8,2V-30V$	30	600	50M		400m	Si	DO7
9	1N5462B							8.2p%	4.0	2.8;2V-30V$	30	600	50M		400m	Si	DO7
10▼	JAN1N5462B							8.2p	4 0	7 79-8.61Ø	30 ☑	600	50M		400m	Si	DO7
11	1N5462C							8.2p%	4.0	2 8;2V-30V$	30	600	50M		400m	Si	DO7
12	1N5462D							8.2p%	4 0	2.8;2V-30V$	30	600	50M		400m	Si	DO7
13	1N5682,A,B							8.2p%	4.0	3.75;2 0V-40V$	40 $	600	50M		400m	*	DO7
14	1N5694,A,B							8.2p%	4 0	3 95;2.0V-40V$	40 $	225	50M		400m	*	DO7
15	1N5697,A,B							8.2p%	4.0	3.40;4.0V-60V$	60 $	450	50M		400m	*	DO7
16	CV1865B							8.2p	4 0	7.38-9 02	60	300	100M		5 0	Si	F27x☑
17	CV1865D							8.2p	4 0	7 38-9.02	60	300	100M		5.0	Si	F56n☑
18▼	CV5008							8.2p	4 0	2 5;2.0V-30V$	30	450	50M		400m	Si	DO7
19	D1722,B,C							8.2p†%	4.0	7 4-9.0Ø	30 ☑	500	50M		400m	Si#$	A1st
20	D6903							8.2p	4.0	2.8;2-30V$	30	600	50M		40	Si$	DO7
21#	DC4211							8.2p	4.0		60	250	50M			Si	M524
22	DE1722A							8 2p†	4 0	7.5-9.0Ø	30 ☑	1.0k	50M		4 0		F77
23	DEP1722A							8.2p†	4 0	7.5-9.0Ø	30 ☑	1.0k	50M		4.0		F78
24	E1722A							8.2p†	4 0	7.5-9.0	30	1 0k	50M		4 0		F10k
25	EP1722A							8.2p†	4.0	7 5-9.0	30	1.0k	50M		4.0		F27ac
26	GC1712	50G						8.2p§	4 0	7.0;0.0V-60V$	60 ☑	1 0k	50M				F27w
27	GC1762							8.2p	4 0	2 8-22	60	1000	50M		300m	Si	A1n
28	IC58-30,A,B,C							8.2p%	4.0	16 000-3.500	50	300	50M		500m	Si	M214a
29	IC108-30,A,B,C							8.2p%	4 0	16 000-2 500	100	300	50M		500m	Si	M214a
30	MA45034							8 2p†	4 0	2.5;2 0-30V$	35 $	600	50G		400m	Si$	A31e
31	MV1622							8 2p§	4 0	7.4 - 9.0Ø	20 ☑	300	05G		40	Si$	DO7
32	MV1722							8.2p§	4.0	7 4 - 9 0Ø	30 ☑	500	05G		.40	Si$	DO7
33	MV1722A							8.2p	4 0		30 ☑	500	50M		400m	Si△#	DO7
34	MV1865A							8.2p†	4 0	7.38 - 9 02Ø	60			80	5 0	Si	F27a
35	MV1865B							8 2p†	4 0	7.38 - 9.02Ø	60			80	5 0	Si	F10a
36	MV1865D							8.2p†	4 0	7.38 - 9 02Ø	60			80	5.0	Si	F56e
37	MV2102							8.2p§	4.0	7.4-9.0Ø	30	450	50M		280m	Si	C103
38	PV1865D							8.2p△	4 0	2.9,4 0V-60V$	60 $	300	100M		2 0	*	F56j
39	PVM4082,A,B							8 2p%	4.0	7.30;0 0V-40V$	40 $	85	1 0G		2.0	*	F56j
40	PVM6082,A,B							8.2p%	4 0	8.70;0 0V-60V$	60 $	55	1 0G		2 0	*	F56j
41	SQ1222A,B,C							8 2p§%	4 0		30 ☑	1.0k	50M		250m	Si#$	A1ah
42	SQ1272A,B,C							8.2p§%	4.0		30 ☑	500	50M		250m	Si#$	A1ah
43	SQ1722,B,C							8 2p§%	4 0	7 4-9.0Ø	30 ☑	1.0k	50M		500m	Si#$	DO7
44	SQ5442A							8 2p%	4 0		30 ☑	450	50M		400m		DO7
45	SQ5442B							8.2p%	4 0		30 ☑	450	50M		400m		DO7
46	SQ5442C							8.2p%	4 0		30 ☑	450	50M		400m		DO7
47	SQ5462A							8 2p%	4 0		30 ☑	600	50M		400m		DO7
48	SQ5462B							8.2p%	4 0		30 ☑	600	50M		400m		DO7
49	SQ5462C							8 2p%	4.0		30 ☑	600	50M		400m		DO7
50	VVC727,A,B,C,D							8 2p%	4.0		20	300	50M			Si	DO7
51	VVC728,A,B,C,D							8.2p%	4 0		30	500	50M			Si	DO7
52#	ZC701							8 2p†	4.0	2.8,2 0V-30V$	30	500	50M		400m	Si	DO7
53	MA4287							8.5p	6 0			30		3.0		Si	A31e
54	MA4387							8 5p	6 0			30		3 0		Si	A31e
55	SD11D18							9.0p	0.0	9.0 - 18	18			1.3		Si	P3
56	SD12D18							9.0p	0 0	9.0 - 18	18			1 3		Si	F3a
57	SD22D18							9 0p	0.0	9 0 - 18	18			1 3		Si	F11
58	SD32D18							9 0p	0 0	9.0 - 18	18			1.3		Si	F21
59	SD42D18							9.0p	0 0	9.0 - 18	18			1 3		Si	F9a
60	SDGPD18							9.0p	0.0	9.0 - 18	18			1 3		Si	DO7
61#	1S1923							9.0p	4 0	6 0-12Ø	15	100	100M			Si$	A60m
62▼#	1S2139B							9 0p	4.0	6.0-12Ø	15	100	50M			Si	A60m
63	NPQ8317							9.0p	4.0	7.0 - 11Ø	20	200	.05G		.25	Si	DO7
64	TIV307							9 0p	4.0	7.0-11Ø	20	200	50M		250m	Si#	DO35
65	VVC794,A,B,C,D							9.0p%	4 0		25	50	50M			Si	DO7
66#	1S1551							9 0p	6 0	6.0-12Ø	90			2.3	8 0	Si$$	S19g
67#	1S1556							9.0p	6 0	6 0-12Ø	120			2.3	11	Si$$	S19g
68▼	GC3303	60G						9 0p	6.0	8 0-10Ø	160				33	Si	F49f
69	MA4341E1							9.0p	6.0	6 0 - 12	6.0			50	1 0	Si	P3a§
70	MA4341E							9.0p	6 0	6.0 - 12	6.0			1.3	1 0	Si	F3a
71	MA4953B	50G						9 0p	6 0	6 0 - 12Ø	120				12	Si$	S250d
72	MA4953C	50G						9.0p	6.0	6 0 - 12Ø	120				12	Si$	F49a
73	VAB801N26,N27,N28	60						9.0p△	6 0	8.0-10Ø	120					Si	Z42
74	VAB811AN25,26,28	60						9 0p△	6 0	8 0-10Ø	80					Si	Z42
75	VAB811N26,N27,N28	60						9 0p△	6 0	8.0-10Ø	100					Si	Z42
76#	1S995							9.0p	10		35	60	25M			Si*	A1ce
77#	BSC21							9 0p	60		60	1.0	10G			Si	A31e
78	SD11E120							9.6p	0 0	9 6 - 18	120			1.5		Si	P3
79	SD12E120							9 6p	0 0	9 6 - 18	120			1.5		Si	F3a
80	SD22E120							9 6p	0.0	9 6 - 18	120			1.5		Si	F11
81	SD32E120							9 6p	0 0	9 6 - 18	120			1.5		Si	F21
82	SD42E120							9 6p	0 0	9 6 - 18	120			1.5		Si	F9a
83	SDGPE120							9 6p	0 0	9 6 - 18	120			1.5		Si	DO7
84	D5940F							10p	0 0		60 ☑	1 4kØ	50M				F27g
85	D5950F							10p	0 0		90 ☑	1 0kØ	50M				F27g
86	SD11E24							10p	0 0	10.5-21	24			1.5		Si	P3
87	SD12E24							10p	0.0	10 5-21	24			1 5		Si	F3a
88	SD22E24							10p	0 0	10 5-21	24			1 5		Si	F11
89	SD32E24							10p	0 0	10 5-21	24			1 5		Si	F21
90	SD42E24							10p	0.0	10 5-21	24			1.5		Si	F9a
91	SDGPE24							10p	0 0	10 5-21	24			1 5		Si	DO7
92	VAT12N16,N18,N20							10p†△	0.0	8 0 - 11 9Ø	120	500	50M				Z42
93	VAT52N16,N18,N20							10p†△	0 0	8 0 - 11.9Ø	60	1000	50M				Z42
94	VAT72N16,N18,N20							10p△†	0 0	8 0 - 11 9Ø	45	1700	50M				Z42
95#	BA110							10p	2 0	1 5;2 0 - 10V$	30 ☑	540 Ø	30M	1.0 ☑		Si△	DO7
96#	BA120							10p	2 0	8 0 - 12Ø	50	440 Ø	30M	1.2		Si	DO7
97	CBA110							10p	2 0	8 0 - 12Ø	30	300 Ø	30G	1.8	250m	Si	A1ce
98	Q10							10p	2.0	8 0 - 12	50	300	.03G	1.8		Si	DO7
99	1N4788							10p	4.0	2.5..10V to 4 0V$	25	15	50M		500m		DO14
100	1N4788,A,B,C,D							10p%	4 0	2 5;0-4 0V$	25 $	15	50M		500m	Si	DO14
101	1N4803,A,B,C,D							10p%	4 0	2 5;0.0-4 0V$	100 $	15	50M		500m	Si	DO14
102	JAN1N4803A,B							10p%	4.0	2 58; 10-40V$	100 $	15	50M		500m	Si	A1dd
103	1N5140,A							10p%△	4 0	2.8;4 0-60V$	60 ☑	300	50M		400m	Si	DO7
104	JAN1N5140A							10p	4 0	9 50 - 10.5Ø		300	50m		.40	Si	DO7
105	1N5443							10p%	4.0	2.6;2V-30V$	30	400	50M		400m	Si	DO7
106	1N5443A							10p%	4 0	2 6;2V-30V$	30	400	50M		400m	Si	DO7
107	1N5443B							10p%	4 0	2 6,2V-30V$	30	400	50M		400m	Si	DO7
108	1N5443C							10p%	4 0	2 6,2V-30V$	30	400	50M		400m	Si	DO7
109	1N5443D							10p%	4 0	2 6;2V-30V$	30	400	50M		400m	Si	DO7
110	1N5463							10p%	4 0	2 8,2V-30V$	30	550	50M		400m	Si	DO7

SYMBOLS AND CODES EXPLAINED IN INTERPRETER

10 VOLTAGE VARIABLE CAPACITORS & VARACTOR DIODES

IN ORDER OF (1) TYPICAL CAPACITANCE, (2) TEST VOLTAGE, and (3) TYPE No.

LINE No.	3 TYPE No	MINIMUM CUTOFF FREQUENCY (Corresponding to Type Numbers in previous column) (Hz)	(Hz)	(Hz)	(Hz)	(Hz)	(Hz)	TYP. CAP. 1 CAP Cj (F)	2 at TEST VOLT (V)	CAPACITANCE RANGE (for V = 0 to PIV) Ø - at TEST VOLT (pF)	PIV (V)	Q FACTOR MIN. Q	at TEST FREQ (Hz)	MAX. SER. RES. Rs (Ω)	MAX. DISS. @ 25°C (W)	DESCRIPTION MAT.	DWG No.
1	1N5463A							10p%	4 0	2.8;2V-30V$	30	550	50M		400m	Si	DO7
2	1N5463B							10p%	4 0	2.8;2V-30V$	30	550	50M		400m	Si	DO7
3▼	JAN1N5463B							10p	4 0	9.95-10.5Ø	30 ☑	550	50M		400m	Si	DO7
4	1N5463C							10p%	4 0	2.8;2V-30V$	30	550	50M		400m	Si	DO7
5	1N5463D							10p%	4 0	2 8;2V-30V$	30	550	50M		400m	Si	DO7
6	1N5683,A,B							10p%	4 0	3 80;2.0V-40V$	40 $	550	50M		400m	*	DO7
7	1N5698,A,B							10p%	4 0	3.45;4.0V-60V$	60 $	400	50M		400m	*	DO7
8#	BBY18							10pt	4 0	7 7;2.0V-100V$	100	100	50M		500m	Si	DO7
9	CV1866B							10p	4 0	9.00-11	60	250	100M		5 0	Si	F27x☑
10	CV1866D							10p	4 0	9 00-11	60	250	100M		5.0	Si	F56n☑
11▼	CV5010							10p	4 0	2.5;2.0V-30V$	30	400	50M		400m	Si	DO7
12	D1724,B,C							10pt%	4 0	9.0-11Ø	30 ☑	500	50M		400m	Si#$	A1st
13	D6904							10p	4 0	2 8;2-30V$	30	600	50M		40	Si$	DO7
14#	DC4212							10p	4 0		60	250	50M			Si	M524
15	DE1724A							10pt	4.0	9 0-11Ø	30 ☑	1.0k	50M		4.0		F77
16	DEP1724A							10pt	4 0	9 0-11Ø	30 ☑	1 0k	50M		4 0		F78
17	E610							10p	4 0		60	500	50M			Si	
18	E710							10p	4.0		60	900	50M			Si	
19	E1724A							10pt	4 0	9 0-11	30	1 0k	50M		4 0		F10k
20	EP1724A							10pt	4 0	9 0-11	30	1 0k	50M		4.0		F27ac
21	FV1008,A,B,C,D							10p%	4 0	5 2$	65 ☑	150	.05G		40	Si#	A1ce
22	FV1108,A,B,C,D							10p%	4.0	5.9$	110 ☑	150	50M		400m	Si#	A1ce
23	G110,A,B							10p%	4 0		25	100 Ø	50M		500m	Si$	A60j
24	G210,A,B							10p%	4 0		25	200 Ø	50M		500m	Si$	A60j
25	G310,A,B							10p%	4 0		25	300 Ø	50M		500m	Si$	A60j
26	G410,A,B							10p%	4 0		25	400 Ø	50M		500m	Si$	A60j
27	G510☑,A,B							10p%	4 0		25	500 Ø	50M		500m	Si$	A60j
28	G610,A,B							10p%	4 0		25	600 Ø	50m		500m	Si$	A60j
29	G030010-1R							10p	4 0	3 4;1.0-30V$	30	200 Ø	50M			Si	DO7
30	G030010-2R							10p	4 0	3.4;1.0-30V$	30	400 Ø	50M			Si	DO7
31	G030010-3R							10p	4.0	3.4,1 0-30V$	30	600 Ø	50M			Si	DO7
32	G060010-1R							10p	4 0	5 0;1 0-60V$	60	200 Ø	50M			Si	DO7
33	G060010-2R							10p	4 0	5 0,1 0-60V$	60	400 Ø	50M			Si	DO7
34	G060010-3R							10p	4 0	5.0,1 0-60V$	60	600 Ø	50M			Si	DO7
35	GC1713	47G						10p§	4 0	7 0;0 0V-60V$	60 ☑	950	50M				F27w
36	GC1763							10p	4 0	3 5-25	60	900	50M		400m	Si	DO7
37	IC510-30,A,B,C							10p%	4 0	20 000-4.500	50	300	50M		500m	Si	M214a
38	IC1010-30,A,B,C							10p%	4 0	20.000-3 000	100	300	50M		500m	Si	M214a
39	KV112,A,B,C,D							10p%	4 0	3 0-24.8	80	50	50M		400m	Si	DO14
40	KV115,A,B,C,D							10p%	4 0	2 8-24.8	100	100	50M		400m	Si	DO14
41	KV132							10p	4.0	4 8-24.8	25	50	50M		400m	Si	DO14
42	KV135							10p	4 0	3 7-24.8	50	150	50M		400m	Si	DO14
43	KV151							10p	4 0	3 0-24.8	80	100	50M		400m	Si	DO14
44	KV157							10p	4 0	4.8-24.8	25	150	50M		400m	Si	DO14
45	KV163							10p	4 0	2 8-24.8	100	75	50M		400m	Si	DO14
46	KV210							10p	4 0	2.4-24.8	150	75	50M		400m	Si	DO14
47	KV211							10p	4 0	2.4-24.8	150	100	50M		400m	Si	DO14
48	KV310							10p	4 0	6.0;2.0V-200V$	200	75	50M		400m	Si	DO14
49	KV311							10p	4 0	5.7;2.0V-200V$	200	100	50M		400m	Si	DO14
50	KV5140							10p	4 0	2.8;4.0V-60V$	90	300	50M		400m	Si	DO7
51	MA4019C							10p	4 0	5.2$	110 ☑	100	50M			Si#$	Z45
52	MA4273C							10p	4 0	8 0 - 12Ø	110	100	05G		.50	Si	A31e
53	MA45035							10pt	4 0 2	5,2V-30V$	35 ☑	600	50G		.40	Si$	A31e
54	MC10△							10p	4.0		60 †	10	50M			Si	A1au
55	MC101,A,B							10p%	4 0	4 8;2.0-100V$	110 ☑	150	50M		500m	Si$#	A1ce
56	MC107,A,B							10p%	4.0 4	0;2V- 75V$	85 ☑	150	.05G		50	Si$#	A1ce
57	MC113,A,B							10p%	4 0 3	0;2V- 40V$	50 ☑	150	.05G		50	Si$#	A1ce
58	MC410							10p	4 0		60 †	100	50M			Si	A1au
59	MV10,A							10p	4.0	±2 0,±1.0Ø	25	13	.05G		25	Si	A109
60	MV10E	18G						10p	4.0	±2.0,±1.0Ø	100	3.5	.05G		25	Si	A109
61	MV1624							10p§	4 0	9 0 - 11Ø	20 ☑	300	05G		40	Si$	DO7
62	MV1724							10p§	4 0	9 0 - 11Ø	30 ☑	500	05G		40	Si$	DO7
63	MV1724A							10p	4 0		30 ☑	500	50M		400m	Si△#	DO7
64	MV1866A							10pt	4 0	9 0 - 11Ø	60			70	5 0	Si	F27a
65	MV1866B							10pt	4 0	9 0 - 11Ø	60			.70	5 0	Si	F10a
66	MV1866D							10pt	4.0	9 0 - 11Ø	60			.70	5 0	Si	F56e
67	MV2103							10p§	4.0	9 0-11Ø	30	400	50M		280m	Si	C103
68	MV2203							10p§	4.0	8 5-11.5Øt	25 ☑	200	50M		280m	Si	C103
69#	MVE6115							10p	4 0	8 0-12 2Ø	100 ☑	75	100M		8 3	Si*	S250b
70	NPC704							10p	4 0	8 0 - 12Ø	20	25	.05G		25	Si	DO7
71	PC112,A,B							10p%	4 0	6 9;.50-50V$	80 $	50	50M			Si*	DO14△
72	PC115,A,B							10p%	4 0	7.7,.50-100V$	100 Ø	100	50M			Si*	DO14△
73	PC132,A,B							10p%	4 0	4.5,.50-30V$	30 $	50	50M			Si*	DO14△
74	PC135,A,B							10p%	4 0	5 8;.50-50V$	50 $	75	100M			Si*	DO14△
75	PC301							10p△	4 0	2.4;.10-4.0V$	125 $	175	50M		500m	Si*	DO14
76	PC302							10p△	4 0	2 4;.10-4.0V$	100 $	175	50M		500m	Si*	DO14
77	PC303							10p△	4 0	2.4;.10-4.0V$	75 $	175	50M		500m	Si*	DO14
78	PC304							10p△	4.0	2.4;.10-4.0V$	50 $	175	50M		500m	Si*	DO14
79	PC305							10p△	4 0	2 4,.10-4.0V$	30 $	175	50M		500m	Si*	DO14
80	PC307							10p△	4.0	2 4,.10-4 0V$	125 $	150	50M		500m	Si*	DO14
81	PC308							10p△	4 0	2 4;.10-4.0V$	100 $	150	50M		500m	Si*	DO14
82	PC309							10p△	4.0	2.4;.10-4 0V$	75 $	150	50M		500m	Si*	DO14
83	PC310							10p△	4 0	2.4;.10-4 0V$	50 $	150	50M		500m	Si*	DO14
84	PC311							10p△	4 0	2.4;.10-4 0V$	30 $	150	50M		500m	Si*	DO14
85	PC312							10p△	4 0	2 4,.10-4 0V$	150 $	125	50M		500m	Si*	DO14
86	PC313							10p△	4 0	2 4;.10-4.0V$	125 $	125	50M		500m	Si*	DO14
87	PC314							10p△	4.0	2.4,.10-4.0V$	100 $	125	50M		500m	Si*	DO14
88	PC315							10p△	4 0	2 4;.10-4 0V$	75 $	125	50M		500m	Si*	DO14
89	PC316							10p△	4 0	2 4;.10-4.0V$	50 $	125	50M		500m	Si*	DO14
90	PC317							10p△	4 0	2 4,.10-4 0V$	30 $	125	50M		500m	Si*	DO14
91	PC318							10p△	4.0	2.4;.10-4 0V$	150 $	100	50M		500m	Si*	DO14
92	PC319							10p△	4.0	2.4;.10-4.0V$	125 $	100	50M		500m	Si*	DO14
93	PC320							10p△	4.0	2.4,.10-4 0V$	100 $	100	50M		500m	Si*	DO14
94	PC321							10p△	4.0	2.4;.10-4.0V$	75 $	100	50M		500m	Si*	DO14
95	PC322							10p△	4 0	2 4,.10-4 0V$	50 $	100	50M		500m	Si*	DO14
96	PC323							10p△	4.0	2 4,.10-4 0V$	30 $	100	50M		500m	Si*	DO14
97	PC324							10p△	4.0	2.4,.10-4.0V$	150 $	75	50M		500m	Si*	DO14
98	PC325							10p△	4.0	2 4,.10-4 0V$	125 $	75	50M		500m	Si*	DO14
99	PC326							10p△	4.0	2 4;.10-4 0V$	100 $	75	50M		500m	Si*	DO14
100	PC327							10p△	4 0	2 4;.10-4 0V$	75 $	75	50M		500m	Si*	DO14
101	PC328							10p△	4.0	2 4;.10-4 0V$	50 $	75	50M		500m	Si*	DO14
102	PC329							10p△	4.0	2.4,.10-4 0V$	30 $	75	50M		500m	Si*	DO14
103	PC330							10p△	4 0	2 4,.10-4 0V$	150 $	50	50M		500m	Si*	DO14
104	PC331							10p△	4.0	2 4,.10-4 0V$	125 $	50	50M		500m	Si*	DO14
105	PC332							10p△	4.0	2.4;.10-4.0V$	100 $	50	50M		500m	Si*	DO14
106	PC333							10p△	4.0	2 4;.10-4 0V$	75 $	50	50M		500m	Si*	DO14
107	PC334							10p△	4.0	2 4,.10-4 0V$	50 $	50	50M		500m	Si*	DO14
108	PC335							10p△	4 0	2 4,.10-4 0V$	30 $	50	50M		500m	Si*	DO14
109	PC0601A							10p§△	4.0		30 $	200	50M				DO7
110	PC0601B							10p§△	4 0		30 $	300	50M				DO7

SYMBOLS AND CODES EXPLAINED IN INTERPRETER

10 VOLTAGE VARIABLE CAPACITORS & VARACTOR DIODES

IN ORDER OF (1) TYPICAL CAPACITANCE, (2) TEST VOLTAGE, and (3) TYPE No.

LINE No	3 TYPE No	MINIMUM CUTOFF FREQUENCY (Corresponding to Type Numbers in previous column) (Hz)	(Hz)	(Hz)	(Hz)	(Hz)	(Hz)	TYP. CAP. 1 CAP. Cj (F)	2 at TEST VOLT (V)	CAPACITANCE RANGE (for V = 0 to PIV) Ø - at TEST VOLT. (pF)	PIV (V)	Q FACTOR MIN. Q	at TEST FREQ (Hz)	MAX. SER. RES. Rs (Ω)	MAX. DISS. @ 25°C (W)	DESCRIPTION MAT.	DWG. No.
1	PC0601C							10p§Δ	4.0		30 $	400	50M				DO7
2	PC0601D							10p§Δ	4 0		30 $	500	50M				DO7
3	PC0611A							10p§Δ	4 0		60 $	200	50M				DO7
4	PC0611B							10p§Δ	4 0		60 $	300	50M				DO7
5	PC0611C							10p§Δ	4.0		60 $	400	50M				DO7
6	PC0621A							10p§Δ	4.0		90 $	200	50M				DO7
7	PC0621B							10p§Δ	4 0		90 $	300	50M				DO7
8	PC0631A							10p§Δ	4 0		120 $	200	50M				DO7
9	PC0641A							10p§Δ	4.0		150 $	200	50M				DO7
10	PC1401A							10p§Δ	4 0		30 $	200	50M				A2u
11	PC1401B							10p§Δ	4 0		30 $	300	50M				A2u
12	PC1401C							10p§Δ	4 0		30 $	400	50M				A2u
13	PC1401D							10p§Δ	4 0		30 $	500	50M				A2u
14	PC1411A							10p§Δ	4 0		60 $	200	50M				A2u
15	PC1411B							10p§Δ	4 0		60 $	300	50M				A2u
16	PC1411C							10p§Δ	4.0		60 $	400	50M				A2u
17	PC1421A							10p§Δ	4.0		90 $	200	50M				A2u
18	PC1421B							10p§Δ	4 0		90 $	300	50M				A2u
19	PC1431A							10p§Δ	4 0		120 $	200	50M				A2u
20	PC1441A							10p§Δ	4.0		150 $	200	50M				A2u
21	PC2601A							10p§Δ	4 0		30 $	200	50M				DO7
22	PC2601B							10p§Δ	4 0		30 $	300	50M				DO7
23	PC2601C							10p§Δ	4 0		30 $	400	50M				DO7
24	PC2601D							10p§Δ	4 0		30 $	500	50M				DO7
25	PC2611A							10p§Δ	4 0		60 $	200	50M				DO7
26	PC2611B							10p§Δ	4 0		60 $	300	50M				DO7
27	PC2611C							10p§Δ	4.0		60 $	400	50M				DO7
28	PC2611D							10p§Δ	4 0		60 $	500	50M				DO7
29	PC2621A							10p§Δ	4 0		90 $	200	50M				DO7
30	PC2621B							10p§Δ	4 0		90 $	300	50M				DO7
31	PC2621C							10p§Δ	4 0		90 $	400	50M				DO7
32	PC2621D							10p§Δ	4 0		90 $	500	50M				DO7
33	PC2631A							10p§Δ	4 0		120 $	200	50M				DO7
34	PC2631B							10p§Δ	4 0		120 $	300	50M				DO7
35	PC2631C							10p§Δ	4 0		120 $	400	50M				DO7
36	PC2641A							10p§Δ	4 0		150 $	200	50M				DO7
37	PC2641B							10p§Δ	4 0		150 $	300	50M				DO7
38	PC2641C							10p§Δ	4.0		150 $	400	50M				DO7
39▼	PG110,A,B							10p%	4 0	4.4,2 0V-65V$	65 $	100	100M				DO7
40▼	PG210,A,B							10p%	4 0	4.3,2 0V-65V$	65 $	100	100M				DO7
41▼	PG310,A,B							10p%	4 0	3 9,2 0V-50V$	50 $	150	100M				DO7
42	PV1431							10p§	4 0		120	400	500M				A2u
43	PV1866D							10pΔ	4 0	3 0,4 0V-60V$	60 $	250	100M		2 0	*	F56j
44	PVM4100,A,B							10p%	4 0	7 40;0 0V-40V$	40 $	80	1 0G		2.0	*	F56j
45	PVM6100,A,B							10p%	4 0	8 85,0.0V-60V$	60 $	50	1.0G		2.0	*	F56j
46	SC1Δ							10p	4 0		22	35 Ø	50M				DO7
47	SQ1224A,B,C							10p§%	4 0		30 ⊘	1 0k	50M		250m	Si#$	A1ah
48	SQ1274A,B,C							10p§%	4 0		30 ⊘	500	50M		250m	Si#$	A1ah
49	SQ1724,B,C							10p§%	4 0	9 0-11Ø	30 ⊘	1 0k	50M		500m	Si#$	DO7
50	SQ5443A							10p%	4 0		30 ⊘	400	50M		400m		DO7
51	SQ5443B							10p%	4 0		30 ⊘	400	50M		400m		DO7
52	SQ5443C							10p%	4 0		30 ⊘	400	50M		400m		DO7
53	SQ5463A							10p%	4 0		30 ⊘	550	50M		400m		DO7
54	SQ5463B							10p%	4 0		30 ⊘	550	50M		400m		DO7
55	SQ5463C							10p%	4 0		30 ⊘	550	50M		400m		DO7
56	SV77D							10p	4 0	7 0 - 13Ø	90			3 5	5 0	Si$	
57	V10⊘,AØ,BØ							10p	4 0	±2,1, 50Ø	25	13	05G		50	Si*	DO14
58	V10%,A%,B%,C,D							10p%	4 0	4 3-26	25 $	15	50M		500m		A1st
59	V10#							10p	4 0	8 0 - 12	20	25	.05G			Si	DO7
60	V10EΔ,EAΔ,EBΔ,EC,ED																
								10p%	4 0	2 2-26	100 $	7 0	50M		500m	Si$	DO14
61	V10E⊘,EAØ,EBØ							10p%	4 0	±2 0;1 0,5 0Ø	100	3.5	50M		500m	Si	DO14
62	V910Δ,AΔ,BΔ,CΔ,DΔ							10p%	4 0	4 3 - 26	25 $	15	.05G		50	Si$	DO14
63	V910⊘,AØ,BØ							10p	4.0	±2,1,.50Ø	25	15	.05G		.50	Si*	DO14
64	V910%,A%,B%,C%,D%							10p%	4 0	4 3-26	25 $	15	50M		500m		A1st
65	V910EΔ,EAΔ,EBΔ,EC,ED																
								10p%	4 0	2 2-26	100 $	7 0	50M		500m	Si$	DO14
66	V910E⊘,EAØ,EBØ							10p%	4 0	±2 0,1 0, 50Ø	100	15	50M		500m	Si*	DO14
67	VA112							10p	4 0	24 8 - 3 0	80	50	.05G		.50	Si$	A131
68	VA115							10p	4 0	24 8 - 2 8	100	100	.05G		.50	Si$	A131
69	VA132							10p	4.0	24 8 - 4 8	25	50	05G		.50	Si$	A131
70	VA135							10p	4 0	24 8 - 3 7	50	150	.05G		.50	Si$	A131
71	VA151							10p	4 0	24 8 - 3.0	80	100	05G		.50	Si$	A131
72	VA157							10p	4 0	24 8 - 4 8	25	150	.05G		.50	Si$	A131
73	VA163							10p	4 0	24.8 - 2 8	100	75	05G		.50	Si$	A131
74	VA210	37G						10p	4.0	24 8 - 2 4	150	75	05G	4.3	.50	Si$	A131
75	VA211	50G						10p	4.0	24 8 - 2 4	150	100	.05G	3.2	.50	Si$	A131
76	VA310							10p	4.0	6 0,2.0-200V$	200	75	50M		500m	Si$	DO14Δ
77	VA311							10p	4.0	6 0,2 0-200V$	200	100	50M		500m	Si$	DO14Δ
78	VA5140							10p	4 0	9.0-11	90	300	50M		400m	Si	DO7
79	VA5140A							10p	4 0	9 5-10.5	90	300	50M		400m	Si	DO7
80	VC10,A,B							10p%	4.0	3 1 - 26	50 $	10	.05G				DO7
81	VC210,A,B							10p%	4 0	3 1 - 26	50 $	25	.05G				DO7
82	VC309,A,B							10p%	4 0	3.0;1V-25V$	25 $	50	.05G				DO7
83	VC310,A,B							10p%	4 0	4 0;2V-80V$	80 $	50	.05G				DO7
84	VC409,A,B							10p%	4 0	3.0;1V-25V$	25 $	100	05G				DO7
85	VC410,A,B							10p%	4 0	4.0;1V-50V$	50 $	100	.05G				DO7
86	VC411,A,B							10p%	4 0	4 0;2 0-80V$	100 $	100	50M				DO7
87	VC610,A,B							10p%	4.0	3.0;1V-25V$	40 $	200	.05G				DO7
88	VC611,A,B							10p%	4 0	3 0;1V-25V$	40 $	300	.05G			Si	DO7
89	VC822,A,B							10p%	4 0	4 3 - 26	25 $	13	.05G				DO7
90	VC842,A,B							10p%	4 0	2.2-26	100 $	3 5	50M				DO7
91	VG110,A,B,C,D							10p%	4 0	4.45;2.0-65V$	70	200	50M		400m	Si$	DO7
92	VG210,A,B,C,D							10p%	4.0	4.35;2 0-65V$	70	200	50M		400m	Si$	DO7
93	VG310,A,B,C,D							10p%	4 0	3 9;2.0-50V$	55	300	50M		400m	Si$	DO7
94	VH10							10pΔ	4 0	26 - 4.3	25 $	13	.05G		.50	Si$	DO14
95	VH10E							10pΔ	4 0	26-2 2	100 $	3 5	50M		500m	Si$	DO14
96	VH112	20GØ						10pΔ	4 0	4 0$	80 $	50	50M	6.4	500m	Si$	DO14
97	VH115	40GØ						10pΔ	4 0	5 0$	100 $	100	50M	3 2	500m	Si$	DO14
98	VH132	10GØ						10pΔ	4 0	3 5$	25 $	50	50M	6.4	500m	Si$	DO14
99	VH135	40GØ						10pΔ	4 0	4.0$	50 $	150	50M	2.1	500m	Si$	DO14
100	VH161	30GØ						10pΔ	4 0	5 0$	100 $	75	50M	4.3	500m	Si$	DO14
101	VH168	40GØ						10pΔ	4 0	4.0$	80 $	100	50M	3.2	500m	Si$	DO14
102	VH176	20GØ						10pΔ	4.0	4.0$	50 $	75	50M	4.3	500m	Si$	DO14
103	VH184	30GØ						10pΔ	4 0	3 5$	25 $	150	50M	2.1	500m	Si$	DO14
104	VH202	50GØ						10pΔ	4 0	5 8$	150 $	100	50M	3.2	500m	Si$	DO14
105	VH203							10pΔ	4 0	5 8$	150 $	60	50M	2.1	500m	Si$	DO14
106	VH226							10pΔ	4 0	6 5$	200 $	50	50M	3 2	500m	Si$	DO14
107	VH910							10pΔ	4.0	26 - 4 3	25 $	13	.05G		50	Si$	DO14
108	VH910E							10pΔ	4 0	26-2.2	100 $	3.5	50M	6.4	500m	Si$	DO14

SYMBOLS AND CODES EXPLAINED IN INTERPRETER

10 VOLTAGE VARIABLE CAPACITORS & VARACTOR DIODES

IN ORDER OF (1) TYPICAL CAPACITANCE, (2) TEST VOLTAGE, and (3) TYPE No.

LINE No.	3 TYPE No.	MINIMUM CUTOFF FREQUENCY (Corresponding to Type Numbers in previous column) (Hz)	(Hz)	(Hz)	(Hz)	(Hz)	(Hz)	TYP. CAP. 1 CAP. C_J (F)	2 at TEST VOLT (V)	CAPACITANCE RANGE (for V = 0 to PIV) Ø - at TEST VOLT. (pF)	PIV (V)	Q FACTOR MIN. Q	at TEST FREQ (Hz)	MAX. SER. RES. Rs (Ω)	MAX. DISS. @ 25°C (W)	DESCRIPTION MAT.	DWG. No.
1	VM300,A,B,C,D							10p%	4 0	4.8;4 0-150V$	165	175			500m	Si$	DO14
2	VM301,A,B,C,D							10p%	4 0	4.5;4 0-125V$	138	175			500m	Si$	DO14
3	VM302,A,B,C,D							10p%	4 0	4.2;4.0-100V$	110	175			500m	Si$	DO14
4	VM303,A,B,C,D							10p%	4 0	3.4;4 0-75V$	83	175			500m	Si$	DO14
5	VM304,A,B,C,D							10p%	4 0	2 9,4 0-50V$	55	175			500m	Si$	DO14
6	VM305,A,B,C,D							10p%	4.0	2 3;4 0-30V$	33	175			500m	Si$	DO14
7	VM306,A,B,C,D							10p%	4.0	4 8;4.0-150V$	165	150			500m	Si$	DO14
8	VM307,A,B,C,D							10p%	4.0	4.5;4.0-125V$	138	150			500m	Si$	DO14
9	VM308,A,B,C,D							10p%	4.0	4.2;4.0-100V$	110	150			500m	Si$	DO14
10	VM309,A,B,C,D							10p%	4 0	3.4;4 0-75V$	83	150			500m	Si$	DO14
11	VM310,A,B,C,D							10p%	4 0	2 9;4.0-50V$	55	150			500m	Si$	DO14
12	VM311,A,B,C,D							10p%	4.0	2.3;4.0-30V$	33	150			500m	Si$	DO14
13	VM312,A,B,C,D							10p%	4 0	4.8;4.0-150V$	165	125			500m	Si$	DO14
14	VM313,A,B,C,D							10p%	4 0	4.5;4.0-125V$	138	125			500m	Si$	DO14
15	VM314,A,B,C,D							10p%	4 0	4.2;4 0-100V$	110	125			500m	Si$	DO14
16	VM315,A,B,C,D							10p%	4 0	3.4;4.0-75V$	83	125			500m	Si$	DO14
17	VM316,A,B,C,D							10p%	4.0	2 9;4.0-50V$	55	125			500m	Si$	DO14
18	VM317,A,B,C,D							10p%	4.0	2 3;4.0-30V$	33	125			500m	Si$	DO14
19	VM318,A,B,C,D							10p%	4.0	4 8;4.0-150V$	165	100			500m	Si$	DO14
20	VM319,A,B,C,D							10p%	4 0	4 5,4 0-125V$	138	100			500m	Si$	DO14
21	VM320,A,B,C,D							10p%	4 0	4.2;4.0-100V$	110	100			500m	Si$	DO14
22	VM321,A,B,C,D							10p%	4.0	3 4;4.0-75V$	83	100			500m	Si$	DO14
23	VM322,A,B,C,D							10p%	4 0	2 9;4.0-50V$	55	100			500m	Si$	DO14
24	VM323,A,B,C,D							10p%	4 0	2.3,r 0-30V$	33	100			500m	Si$	DO14
25	VM324,A,B,C,D							10p%	4.0	4 8;4.0-150V$	165	75			500m	Si$	DO14
26	VM325,A,B,C,D							10p%	4 0	4 5,4 0-125V$	138	75			500m	Si$	DO14
27	VM326,A,B,C,D							10p%	4.0	4 2;4.0-100V$	110	75			500m	Si$	DO14
28	VM327,A,B,C,D							10p%	4.0	3 4;4 0-75V$	83	75			500m	Si$	DO14
29	VM328,A,B,C,D							10p%	4 0	2.9;4 0-50V$	55	75			500m	Si$	DO14
30	VM329,A,B,C,D							10p%	4.0	2 3;4 0-30V$	33	75			500m	Si$	DO14
31	VM330,A,B,C,D							10p%	4 0	4.8;4 0-150V$	165	50			500m	Si$	DO14
32	VM331,A,B,C,D							10p%	4 0	4.5,4 0-125V$	138	50			500m	Si$	DO14
33	VM332,A,B,C,D							10p%	4 0	4 2,4.0-100V$	110	50			500m	Si$	DO14
34	VM333,A,B,C,D							10p%	4 0	3 4;4 0-75V$	83	50			500m	Si$	DO14
35	VM334,A,B,C,D							10p%	4.0	2 9,4 0-50V$	55	50			500m	Si$	DO14
36	VM335,A,B,C,D							10p%	4 0	2.3;4.0-30V$	33	50			500m	Si$	DO14
37	VVC203,A,B,C,D							10p%	4.0		25	13	50M			Si	DO7
38	VVC204,A,B,C,D							10p%	4 0		100	3 5	50M			Si	DO7
39	VVC401,A,B,C,D							10p%	4 0	±2 0Ø	80	50	05G			Si	DO7
40	VVC403,A,B,C,D							10p%	4 0	±2 0Ø	100	100	05G			Si	DO7
41	VVC412,A,B,C,D							10p%	4 0	±2 0Ø	25	50	.05G			Si	DO7
42	VVC705,A,B,C,D							10p%	4.0		30	50	50M			Si	DO7
43	VVC706,A,B,C,D							10p%	4 0		50	75	100M			Si	DO7
44	VVC729,A,B,C,D							10p%	4 0		30	500	50M			Si	DO7
45	VVC730,A,B,C,D							10p%	4.0		20	300	50M			Si	DO7
46	VVC795,A,B,C,D							10p%	4 0		8 0	50	50M			Si	DO7
47	VVC796,A,B,C,D							10p%	4 0		50	10	50M			Si	DO7
48	VVC797,A,B,C,D							10p%	4.0		50	25	50M			Si	DO7
49	VVC798,A,B,C,D							10p%	4.0		60	10	50M			Si	DO7
50	VVC799,A,B,C,D							10p%	4 0		60	100	50M			Si	DO7
51	VVC850,A,B,C,D							10p%	4 0		30	100	50M			Si	DO7
52	VVC851,A,B,C,D							10p%	4.0		40	200	50M			Si	DO7
53	VVC852,A,B,C,D							10p%	4 0		60	100	50M			Si	DO7
54	VVC853,A,B,C,D							10p%	4.0		110	100	50M			Si	DO7
55	VVC910,A,B,C,D							10p%	4.0		25	150	50M			Si	DO7
56	VVC911,A,B,C,D							10p%	4 0		50	150	50M			Si	DO7
57	VVC912,A,B,C,D							10p%	4 0		80	100	50M			Si	DO7
58	VVC913,A,B,C,D							10p%	4 0		100	75	50M			Si	DO7
59	VVC914,A,B,C,D							10p%	4.0		150	60	50M			Si	DO7
60	VVC915,A,B,C,D							10p%	4.0		150	100	50M			Si	DO7
61	VVC1004,A,B,C,D							10p%	4.0		30	500	50M			Si	DO7
62#	ZC702							10pt	4 0	2.8,2 0V-30V$	30	500	50M		400m	Si	DO7
63#	SV89E							10p	6 0	8.0 - 12Ø	180			1 5 ☑		Si$#	S201
64#	BXY22G							10p	15	8 8 - 11 2Ø	30			1.5		Si#$	F48a
65#	BB100							10p	30	1 5;3.0 - 30V$	25			2.0	250m	Si#$	DO7
66	1N5150							11p		4.3-19.3Ø	80 ☑			1 0	19	Si	F48b
67	D5258							11p	0 0		45 ☑	1 4kØ	50M				F27g
68	BB105							11p	3 0	1.8-2.8Ø	30			1.2		Si$#	
69	BB117							11p	3 0	2.5-4.0	17			1.2		Si	
70#	BB121	20GØ						11p	3 0	4.3-6.0,2 9-25V$	30 ☑					Si$#	DO35
71#	BB142	10GØ						11p	3.0	3 5-6.0;2.9-25V$	30 ☑					Si$#	DO35
72▼	KV2101							11p	3.0	10 5-12.5Ø	22	300	50M				DO7
73▼	KV2102							11p	3.0	10.5-12.5Ø	22	200	50M				DO7
74▼	KV2103							11p	3.0	10.5-12.5Ø	15	200	50M				DO7
75#	MA320							11pΔ	3 0	4.0;3.0 - 25V$	28			1 2		Si#$	A246Δ
76	TIV308							11p	4.0	9 0-14Ø	20	200	50M		250m	Si#	DO35
77	1N5149							11p	6.0	4.3-19.3Ø	80 ☑			1.0	14	Si	F48b
78	1N5150A							11p	6.0	10 1-12 5Ø	80 ☑			1 0	29	Si	F48b
79	A711-3A,B,C,D,E	5.0G	10G	15G	20G	30G		11p	6.0	7 9-14.4Ø	24				2.5	Si$Δ	F11
80	A711-4A,B,C,D	5.0G	10G	15G	20G			11p	6 0	7.9-14.4Ø	30				2 5	Si$Δ	F11
81	A711-5A,B,C,D	5.0G	10G	15G	20G			11p	6.0	7.9-14.4Ø	45				2 5	Si$Δ	F11
82	A711-6A,B,C	5.0G	10G	15G				11pt	6.0	7.9-14.4Ø	60				2 5	Si$Δ	F11
83	A711-7A,B,C	5.0G	10G	15G				11pt	6 0	7 9-14 4Ø	90				2 5	Si$Δ	F11
84	A711-8A,B	5.0G	10G					11pt	6.0	7 9-14.4Ø	120				2 5	Si$Δ	F11
85	PH1205-1,2,3,4		5.0G	10G	15G	20G		11p	6 0	8.0 - 14Ø	6.0	☑	10G			Si$	F58
86	PH1205A,B,C	30G	40G	50G				11p	6 0	8 0-14Ø	6.0	☑	10G			Si$	F58
87	PH1215-1,2,3,4		5 0G	10G	15G	20G		11p	6 0	8.0 - 14Ø	15	☑	10G			Si$	F58
88	PH1215A,B,C	30G	40G	50G				11p	6 0	8 0-14Ø	15	☑	10G			Si$	F58
89	PH1225-1,2,3,4		5.0G	10G	15G	20G		11p	6.0	8 0 - 14Ø	24	☑	10G			Si$	F58
90	PH1225A,B,C	30G	40G	50G				11p	6 0	8 0-14Ø	24	☑	10G			Si$	F58
91	PH1235-1,2,3,4		5 0G	10G	15G	20G		11p	6 0	8.0 - 14Ø	30	☑	10G			Si$	F58
92	PH1235A	30G						11p	6 0	8.0-14Ø	30	☑	10G			Si$	F58
93	PH1245-1,2,3,4		5 0G	10G	15G	20G		11p	6.0	8 0 - 14Ø	45	☑	10G			Si$	F58
94	PH1245A	30G						11p	6 0	8.0-14Ø	45	☑	10G			Si$	F58
95	PH1255-1,2,3,4		5 0G	10G	15G	20G		11p	6 0	8 0 - 14Ø	60	☑	10G			Si$	F58
96	PH1255A	30G						11p	6.0	8 0-14Ø	60	☑	10G			Si$	F58
97	PH1265-1,2,3,4		5 0G	10G	15G	20G		11p	6 0	8.0 - 14Ø	90	☑	10G			Si$	F58
98	PH1275-1,2,3,4		5 0G	10G	15G	20G		11p	6 0	8.0 - 14Ø	120	☑	10G			Si$	F58
99	PH1285-1,2	5.0G	10G					11p	6.0	8.0 - 14Ø	150	☑	10G			Si$	F58
100	PH1295-1	5.0G						11p	6 0	8.0 - 14Ø	200	☑	10G			Si$	F58
101	PL0105-1,2,3,4		5.0G	10G	15G	20G		11p	6.0	8.0 - 14Ø	6 0	☑	10G			Si	F27d
102	PL0105A,B,C	30G	40G	50G				11p	6 0	8.0-14Ø	6.0	☑	10G			Si	F27d
103	PL0115-1,2,3,4		5 0G	10G	15G	20G		11p	6 0	8.0 - 14Ø	15	☑	10G			Si	F27d
104	PL0115A,B,C	30G	40G	50G				11p	6 0	8.0-14Ø	15	☑	10G			Si	F27d
105	PL0125-1,2,3,4		5 0G	10G	15G	20G		11p	6 0	8.0 - 14Ø	24	☑	10G			Si	F27d
106	PL0125A,B,C	30G	40G	50G				11p	6.0	8 0-14Ø	24	☑	10G			Si	F27d
107	PL0135-1,2,3,4		5 0G	10G	15G	20G		11p	6 0	8.0 - 14Ø	30	☑	10G			Si	F27d
108	PL0135A	30G						11p	6 0	8.0-14Ø	30	☑	10G			Si	F27d
109	PL0145-1,2,3,4		5 0G	10G	15G	20G		11p	6 0	8.0 - 14Ø	45	☑	10G			Si	F27d
110	PL0145A	30G						11p	6 0	8 0-14Ø	45	☑	10G			Si	F27d

SYMBOLS AND CODES EXPLAINED IN INTERPRETER

10 VOLTAGE VARIABLE CAPACITORS & VARACTOR DIODES

IN ORDER OF (1) TYPICAL CAPACITANCE, (2) TEST VOLTAGE, and (3) TYPE No.

LINE No.	3 TYPE No.	MINIMUM CUTOFF FREQUENCY (Corresponding to Type Numbers in previous column) (Hz)	(Hz)	(Hz)	(Hz)	(Hz)	(Hz)	TYP. CAP. 1 CAP. Cj (F)	2 at TEST VOLT (V)	CAPACITANCE RANGE (for V = 0 to PIV) Ø - at TEST VOLT. (pF)	PIV (V)	Q FACTOR MIN. Q	at TEST FREQ (Hz)	MAX. SER. RES. Rs (Ω)	MAX. DISS. @ 25°C (W)	DESCRIPTION MAT.	DWG. No.
1	PL0155-1,2,3,4		5.0G	10G	15G	20G		11p	6.0	8 0 - 14Ø	60	Ø	10G			Si	F27d
2	PL0155A	30G						11p	6.0	8.0-14Ø	60	Ø	10G			Si	F27d
3	PL0165-1,2,3,4		5.0G	10G	15G	20G		11p	6.0	8.0 - 14Ø	90	Ø	10G			Si	F27d
4	PL0175-1,2,3,4		5.0G	10G	15G	20G		11p	6 0	8.0 - 14Ø	120	Ø	10G			Si	F27d
5	PL0185-1,2	5 0G	10G					11p	6.0	8.0 - 14Ø	150	Ø	10G			Si	F27d
6#	1S351S							11p	10		35	60	25M			Si*	A1ce
7♦#	BB110							11p	30	27-33Ø	30			400m		Si$#	M501
8	SD11E6							12p	0 0	12 - 24	6.0			1.0		Si	P3
9	SD12E6							12p	0.0	12 - 24	6.0			1.0		Si	F3a
10	SD22E6							12p	0.0	12 - 24	6.0			1.0		Si	F11
11	SD32E6							12p	0.0	12 - 24	6.0			1.0		Si	F21
12	SD42E6							12p	0 0	12 - 24	6 0			1.0		Si	F9a
13	SDGPE6							12p	0 0	12 - 24	6.0			1 0		Si	DO7
14▼	BV130	17G						12p	1 0	4.5-30	30			1.6	250m		
15#	1S2085	10G						12p	3.0	3.5;3.0-25V$	28	160	50M			Si△#	DO7
16#	1S2086	10G						12p	3.0	3.5;3.0-25V$	28	160	50M			Si△#	DO7
17#	1S2087	20G						12p	3 0	4.0;3.0-25V$	28	300	50M			Si△#	DO7
18#	1S2088	20G						12p	3 0	4 0;3 0-25V$	28	300	50M			Si△#	DO7
19#	BA141	20G						12p	3.0	4 5;2.9 - 25V$	30 Ø	30	470M	500mØ		Si$#	DO7△
20#	BA142	10G						12p	3 0	4.5;2.9 - 25V$	30 Ø	50	170M	1.0 Ø		Si$#	DO7△
21#	BB141	20GØ						12p	3 0	4.0-5.0;2.9-25V$	30 Ø					Si$#	DO35
22	1N3554							12p	4 0			100				Si	A60p
23	1N4789,A,B,C,D							12p%	4 0	2.49;0.0-4.0V$	25 $	15	50M		500m	Si	DO14
24	1N4804,A,B,C,D							12p%	4.0	2 49;0.0-4.0V$	100 $	15	50M		500m	Si	DO14
25	JAN1N4804A,B							12p%	4.0	2 49; 10-40V$	100 $	15	50M		500M	Si	A1dd
26	1N5141,A							12p%△	4 0	2 8;4.0-60V$	60 Ø	300	50M		400m	Si	DO7
27	JAN1N5141A							12p	4.0	11 4 - 12.6Ø		300	50m		40	Si	DO7
28	1N5444							12p%	4.0	2.6,2V-30V$	30	400	50M		400m	Si	DO7
29	1N5444A							12p%	4 0	2.6;2V-30V$	30	400	50M		400m	Si	DO7
30	1N5444B							12p%	4 0	2 6;2V-30V$	30	400	50M		400m	Si	DO7
31	1N5444C							12p%	4.0	2 6;2V-30V$	30	400	50M		400m	Si	DO7
32	1N5444D							12p%	4.0	2 6;2V-30V$	30	400	50M		400m	Si	DO7
33	1N5464							12p%	4.0	2 8;2V-30V$	30	550	50M		400m	Si	DO7
34	1N5464A							12p%	4 0	2 8;2V-30V$	30	550	50M		400m	Si	DO7
35	1N5464B							12p%	4 0	2.8;2V-30V$	30	550	50M		400m	Si	DO7
36▼	JAN1N5464B							12p	4.0	11.4-12.6Ø	30 Ø	550	50M		400m	Si	DO7
37	1N5464C							12p%	4.0	2.8;2V-30V$	30	550	50M		400m	Si	DO7
38	1N5464D							12p%	4 0	2.8;2V-30V$	30	550	50M		400m	Si	DO7
39	1N5684,A,B							12p%	4.0	3.80,2.0V-40V$	40 $	550	50M		400m	*	DO7
40	1N5699,A,B							12p%	4.0	3 50;4 0V-60V$	60 $	400	50M		400m	*	DO7
41#	1S1924							12p	4 0	9 0-16Ø	15	100	100M			Si$	A60m
42	CV1868B							12p	4.0	10.8-13 20	60	200	100M		5.0	Si	F27xØ
43	CV1868D							12p	4 0	10.8-13 20	60	200	100M		5 0	Si	F56nØ
44▼	CV5012							12p	4.0	2.5,2 0V-30V$	30	400	50M		400m	Si	DO7
45	D1726,B,C							12p†%	4.0	10 8-13.2Ø	30 Ø	450	50M		400m	Si#$	A1st
46	D6905							12p	4 0	3 0,2-30V$	30	600	50M		40	Si$	DO7
47#	DC4213							12p	4 0		60	250	50M			Si	M524
48	DE1726A							12p†	4.0	11-13 2Ø	30 Ø	1 0k	50M		4 0		F77
49	DEP1726A							12p†	4 0	11-13 2Ø	30 Ø	1 0k	50M		4 0		F78
50	E1726A							12p†	4 0	11-13.2	30	1 0k	50M		4 0		F10k
51	EP1726A							12p†	4 0	11-13 2	30	1 0k	50M		4 0		F27ac
52	G030012-1R							12p	4 0	3 4;1.0-30V$	30	200 Ø	50M			Si	DO7
53	G030012-2R							12p	4 0	3 4,1 0-30V$	30	400 Ø	50M			Si	DO7
54	G030012-3R							12p	4.0	3 4;1.0-30V$	30	600 Ø	50M			Si	DO7
55	G060012-1R							12p	4.0	5 0;1 0-60V$	60	200 Ø	50M			Si	DO7
56	G060012-2R							12p	4 0	5 0,1.0-60V$	60	400 Ø	50M			Si	DO7
57	G060012-3R							12p	4.0	5.0;1.0-60V$	60	600 Ø	50M			Si	DO7
58	GC1714	45G						12p§	4.0	7.0;0.0V-60V$	60 Ø	900	50M				F27w
59	GC1764							12p	4 0	3 7-30	60	900	50M		400m	Si	DO7
60	IC512-30,A,B,C							12p%	4 0	24 000-5.000	50	300	50M		500m	Si	M214a
61	IC1012-30,A,B,C							12p%	4.0	24 000-3.500	100	300	50M		500m	Si	M214a
62	KV5141							12p	4 0	2.8;4.0V-60V$	90	300	50M		400m	Si	DO7
63	MA45036							12p†	4 0	2 6;2 0-30V$	35 Ø	500	50G		400m	Si$	A31e
64	MV12,A							12p	4 0	±2 4,±1 2Ø	25	13	.05G		.25	Si	A109
65	MV12E,A	20G						12p	4 0	±2 4,±1 2Ø	100	4 0	.05G		.25	Si	A109
66	MV1626							12p§	4.0	10 8 - 13 2Ø	20 Ø	300	05G		.40	Si$	DO7
67	MV1726							12p§	4 0	10 8 - 13 2Ø	30 Ø	450	.05G		.40	Si$	DO7
68	MV1726A							12p	4.0		30 Ø	450	50M		400m	Si△#	DO7
69	MV1868A							12p†	4 0	10 8-13 2Ø	60			600m	5.0	Si	F27a
70	MV1868B							12p†	4 0	10.8-13 2Ø	60			600m	5 0	Si	F10a
71	MV1868D							12p†	4 0	10 8-13.2Ø	60			600m	5 0	Si	F56e
72	MV2104							12p§	4.0	10.8-13 2Ø	30	400	50M		280m	Si	C103
73	PV1868D							12p△	4 0	3 0,4.0V-60V$	60 $	200	100M		2 0	*	F56j
74	PVM4120,A,B							12p%	4.0	7 45;0 0V-40V$	40 $	75	1 0G		2 0	*	F56j
75	PVM6120,A,B							12p%	4.0	8.95;0 0V-60V$	60 $	45	1 0G		2 0	*	F56j
76	SQ1226A,B,C							12p§%	4.0		30 Ø	900	50M		250m	Si#$	A1ah
77	SQ1276A,B,C							12p§%	4 0		30 Ø	450	50M		250m	Si#$	A1ah
78	SQ1726,B,C							12p§%	4 0	10 8-13 2Ø	30 Ø	900	50M		500m	Si#$	DO7
79	SQ5444A							12p%	4 0		30 Ø	400	50M		400m		DO7
80	SQ5444B							12p%	4 0		30 Ø	400	50M		400m		DO7
81	SQ5444C							12p%	4.0		30 Ø	400	50M		400m		DO7
82	SQ5464A							12p%	4 0		30 Ø	550	50M		400m		DO7
83	SQ5464B							12p%	4 0		30 Ø	550	50M		400m		DO7
84	SQ5464C							12p%	4.0		30 Ø	550	50M		400m		DO7
85	V12Ø,AØ,BØ							12p	4 0	±2 4,1 2, 60Ø	25	13	50M		500m	Si*	DO14
86	V12%,A%,B%,C,D							12p%	4 0	5 2-31	25 $	15	50M		500m		A1st
87	V12E△,EA△,EB△,EC,ED																
								12p%	4 0	2 7-31	100 $	7 0	50M		500m	Si$	DO14
88	V12EØ,EAØ,EBØ							12p%	4 0	±2 4,1 2, 60Ø	100	4 0	50M		500m	Si	DO14
89	V912△,A△,B△,C△,D△							12p%	4 0	5 2 - 31	25 $	15	.05G		.50	Si$	DO14
90	V912Ø,AØ,BØ							12p	4 0	±2 4,1 2, 60Ø	25	15	50M		500m	Si*	A60j
91	V912%,A%,B%,C%,D%							12p%	4 0	5 2-31	25 $	15	50M		500m		A1st
92	V912E△,EA△,EB△,EC,ED																
								12p%	4 0	2 7-31	100 $	7 0	50M		500m	Si$	DO14
93	V912EØ,EAØ,EBØ							12p%	4 0	±2 4,1 2,.60Ø	100	15	50M		500m	Si*	DO14
94	VA5141							12p	4.0	10.8-13.2	90	300	50M		400m	Si	DO7
95	VA5141A							12p	4 0	11 4-12 6	90	300	50M		400m	Si	DO7
96	VC12,A,B							12p%	4 0	3 8 - 31	50 $	10	.05G				DO7
97	VC212,A,B							12p%	4 0	3 8 - 31	50 $	25	.05G				DO7
98	VC612,A,B							12p%	4 0	3 0,1V-25V$	40 $	200	.05G				DO7
99	VC613,A,B							12p%	4 0	3 0;1V-25V$	40 $	300	.05G			Si	DO7
100	VC823,A,B							12p%	4 0	5 2 - 31	25 $	13	.05G				DO7
101	VC843,A,B							12p%	4 0	2 7-31	100 $	4 0	50M				DO7
102	VH12							12p△	4 0	31 - 5 2	25 $	13	.05G		.50	Si$	DO14
103	VH12E							12p△	4 0	31-3 7	100 $	4 0	50M		500m	Si$	DO14
104	VH912							12p△	4 0	31 - 5 2	25 $	13	.05G		.50	Si$	DO14
105	VH912E							12p△	4 0	31-2 7	100 $	4 0	50M		500m	Si$	DO14
106	VVC205,A,B,C,D							12p%	4 0		25	13	50M			Si	DO7
107	VVC206,A,B,C,D							12p%	4 0		100	4 0	50M			Si	DO7
108	VVC731,A,B,C,D							12p%	4 0		20	300	50M			Si	DO7

SYMBOLS AND CODES EXPLAINED IN INTERPRETER

10 VOLTAGE VARIABLE CAPACITORS & VARACTOR DIODES

IN ORDER OF (1) TYPICAL CAPACITANCE, (2) TEST VOLTAGE, and (3) TYPE No.

LINE No.	TYPE No.	MINIMUM CUTOFF FREQUENCY (Corresponding to Type Numbers in previous column) (Hz)	(Hz)	(Hz)	(Hz)	(Hz)	(Hz)	TYP. CAP. 1 CAP. Cj (F)	2 at TEST VOLT (V)	CAPACITANCE RANGE (for V = 0 to PIV) Ø - at TEST VOLT. (pF)	PIV (V)	Q FACTOR MIN. Q	at TEST FREQ (Hz)	MAX. SER. RES. Rs (Ω)	MAX. DISS. @ 25°C (W)	DESCRIPTION MAT.	DWG. No.
1	VVC732,A,B,C,D							12p%	4.0		30	450	50M			Si	DO7
2	VVC810,A,B,C,D							12p%	4.0		50		50M			Si	DO7
3	VVC811,A,B,C,D							12p%	4.0		50					Si	DO7
4	VVC1005,A,B,C,D							12p%	4.0		60	300	50M			Si	DO7
5#	ZC703							12pt	4.0	3.0;2.0V-30V$	30	450	50M		400m	Si	DO7
6	MA4288							12p	6.0		30			3.0		Si	F3a
7	MA4388							12p	6.0		30			3.0		Si	A31e
8	MA4962B,C							12pØ	6.0	6 0 - 12Ø	90 Ø			1.0	10	Si	Z48
9#	BXY22H							12p	15	10.8 - 13.2Ø	30			1.5		Si$#	F48a
10#	BXY23							12p	15	10.7 - 13.3Ø	30 Ø			.90		Si	
11#	MA330							13p	2.0	10 - 16Ø	60			2.5		Si△#$	A246△
12#	BB122	10GØ						13p	3.0	4.5-6.0;2.9-25V$	30 Ø					Si$#	DO35
13▼#	1S2139C							13p	4.0	10-16Ø	15	100	50M			Si	A60m
14	NPC45-2							13p	4.0	7.0-20Ø	20	40 Ø	50M		250m	Si	DO7
15	NPQ6261							13p	4.0	9.0 - 18Ø	15	150	.05G		.25	Si	DO7
16	V13							13p	4.0	7 0 - 20	20					Si	DO7
17	JAN1N4388							13p	6.0	5.0-20Ø	100 Ø				10	Si	DO4
18	MV1809C1							13ptØ	6.0	10.8-13.2Ø	75			500m	14	Si$△	F48b
19#	1S351							13p	10		35	60	25M			Si*	A1ce
20#	1S351M							13p	10		35	60	25M			Si*	A1ce
21	SD11E48							14p	0.0	14 - 27	48			1.0		Si	P3
22	SD11E60							14p	0.0	14 - 28	60			1.0		Si	P3
23	SD12E48							14p	0 0	14 - 27	48			1.0		Si	F3a
24	SD12E60							14p	0.0	14 - 28	60			1 0		Si	F3a
25	SD22E48							14p	0.0	14 - 27	48			1.0		Si	F11
26	SD22E60							14p	0 0	14 - 28	60			1.0		Si	F11
27	SD32E48							14p	0.0	14 - 27	48			1.0		Si	F21
28	SD32E60							14p	0 0	14 - 28	60			1.0		Si	F21
29	SD42E48							14p	0 0	14 - 27	48			1 0		Si	F9a
30	SD42E60							14p	0.0	14 - 28	60			1.0		Si	F9a
31	SDGPE48							14p	0.0	14 - 27	48			1.0		Si	DO7
32	SDGPE60							14p	0 0	14 - 28	60			1.0		Si	DO7
33	VAT13N16,N18,N20							14pt△	0.0	12 - 15.9Ø	120	475	50M				Z42
34	VAT53N16,N18,N20							14pt△	0 0	12 - 15.9Ø	60	1000	50M				Z42
35	VAT73N16,N18,N20							14pt△	0.0	12 - 15 9Ø	45	1700	50M				Z42
36	VVC812,A,B,C,D							14p%	4.0			25				Si	DO7
37#	1S553							14p	6 0	10 - 18Ø	20	60	02G			Si△	A1dr
38	MV1809C							14ptØ	6.0	9.6-14.4Ø	75			500m	9 0	Si$△	F48b
39#	BXY22J							14p	15	13 - 16Ø	30			1.5		Si$#	F48a
40#	BSC51							14pØ	60			80		2.0	15	Si	S4a
41#	BXY11F							15p	0.0	9 0 - 18Ø	65			1.0		Si$§	S286
42#	BXY14F							15p	0 0	9.0 - 18Ø	65			1.0		Si$§	DO19
43#	BXY19F							15p	0 0	9.0 - 18Ø	90 Ø			.50	15	Si	
44	D5940G							15p	0 0		60 Ø	1.4kØ	50M				F27g
45	D5950G							15p	0.0		90 Ø	1 0kØ	50M				F27g
46	MA4060C							15p	0 0	10 - 20	90			2.5		Si	S4d
47	MA4061C							15p	0.0	10 - 20	140			2.5		Si	S4d
48	MA4062C							15p	0 0	10 - 20Ø	70				12	Si	S4d
49	MA4760C							15p	0 0	10 - 20Ø	90			2.5		Si	Z23
50	MA4761C							15p	0 0	10 - 20Ø	120			2.5		Si	Z23
51	SD11E12							15p	0 0	15 - 30	12			1.0		Si	P3
52	SD12E12							15p	0 0	15 - 30	12			1.0		Si	F3a
53	SD22E12							15p	0 0	15 - 30	12			1 0		Si	F11
54	SD32E12							15p	0.0	15 - 30	12			1.0		Si	F21
55	SD42E12							15p	0 0	15 - 30	12			1 0		Si	F9a
56	SDGPE12							15p	0 0	15 - 30	12			1.0		Si	DO7
57#	SV87B							15p	0.0	10 - 20Ø	90			2.5	20	Si	S201
58#	SV88B							15p	0.0	10 - 20Ø	140			2.5	20	Si	S201
59#	BB102/15							15pØ	2.0	13.8 - 15 2Ø	50			1 3	.25 §	Si△	DO7
60#	MV9151							15p	2	5.0;3.0-10V	30 Ø	40	50M		150m	Si△	DO7
61	1N4790,A,B,C,D							15p%	4 0	2 49;0.0-4.0V$	25 $	15	50M		500m	Si	DO14
62	1N4805,A,B,C,D							15p%	4.0	2 49;0.0-4.0V$	100 $	15	50M		500m	Si	DO14
63	JAN1N4805A,B							15p%	4 0	2.49;10-40V$	100 $	15	50M		500m	Si	A1dd
64	1N5142,A							15p%△	4.0	2 8;4 0-60V$	60 Ø	250	50M		400m	Si	DO7
65	JAN1N5142A							15p	4 0	14.3 - 15 7Ø		250	50m		.40	Si	DO7
66	1N5445							15p%	4.0	2.6;2V-30V$	30	400	50M		400m	Si	DO7
67	1N5445A							15p%	4 0	2.6;2V-30V$	30	400	50M		400m	Si	DO7
68	1N5445B							15p%	4 0	2.6;2V-30V$	30	400	50M		400m	Si	DO7
69	1N5445C							15p%	4.0	2 6;2V-30V$	30	400	50M		400m	Si	DO7
70	1N5445D							15p%	4.0	2 6,2V-30V$	30	400	50M		400m	Si	DO7
71	1N5465							15p%	4.0	2.8;2V-30V$	30	550	50M		400m	Si	DO7
72	1N5465A							15p%	4.0	2 8;2V-30V$	30	550	50M		400m	Si	DO7
73	1N5465B							15p%	4.0	2 8,2V-30V$	30	550	50M		400m	Si	DO7
74▼	JAN1N5465B							15p	4 0	14.25-15 75Ø	30 Ø	550	50M		400m	Si	DO7
75	1N5465C							15p%	4.0	2.8;2V-30V$	30	550	50M		400m	Si	DO7
76	1N5465D							15p%	4.0	2 8,2V-30V$	30	550	50M		400m	Si	DO7
77	1N5685,A,B							15p%	4.0	3 85;2.0V-40V$	40 $	550	50M		400m	*	DO7
78	1N5700,A,B							15p%	4.0	3 50;4 0V-60V$	60 $	400	50M		400m	*	DO7
79#	1S1502							15p	4.0		15	150	50M			Si$	A1ce
80#	BBY19							15pt	4.0	7 9;2.0V-100V$	100	100	50M		500m	Si	DO7
81	CV1870B							15p	4.0	13 50-16.50	60	200	100M		5.0	Si	F27xØ
82	CV1870D							15p	4.0	13.50-16 50	60	200	100M		5.0	Si	F56nØ
83▼	CV5015							15p	4 0	2.5;2.0V-30V$	30	400	50M		400m	Si	DO7
84	D1728,B,C							15pt%	4.0	13.5-16.5Ø	30 Ø	450	50M		400m	Si#$	A1st
85	D6906							15p	4.0	3.0,2-30V$	30	500	50M		.40	Si$	DO7
86#	DC4214							15p	4 0		60	250	50M			Si	M524
87	E715							15p	4 0		60	800	50M			Si	
88	FV1010,A,B,C,D							15p%	4.0	5.3$	65 Ø	150	.05G		40	Si#	A1ce
89	FV1110,A,B,C,D							15p%	4 0	6.1$	110 Ø	150	50M		400m	Si#	A1ce
90	G115,A,B							15p%	4 0		25	100 Ø	50M		500m	Si$	A60j
91	G215,A,B							15p%	4 0		25	200 Ø	50M		500m	Si$	A60j
92	G315,A,B							15p%	4 0		25	300 Ø	50M		500m	Si$	A60j
93	G415,A,B							15p%	4.0		25	400 Ø	50M		500m	Si$	A60j
94	G515,A,B							15p%	4.0		25	500 Ø	50M		500m	Si$	A60j
95	G615,A,B							15p%	4 0		25	600 Ø	50M		500m	Si$	A60j
96	G030015-1R							15p	4.0	3 4;1 0-30V$	30	170 Ø	50M			Si	DO7
97	G030015-2R							15p	4 0	3.4,1.0-30V$	30	330 Ø	50M			Si	DO7
98	G030015-3R							15p	4 0	3.4,1 0-30V$	30	530 Ø	50M			Si	DO7
99	G060015-1R							15p	4.0	5.0;1 0-60V$	60	170 Ø	50M			Si	DO7
100	G060015-2R							15p	4 0	5.0;1 0-60V$	60	330 Ø	50M			Si	DO7
101	G060015-3R							15p	4.0	5.0,1 0-60V$	60	530 Ø	50M			Si	DO7
102	GC1715	42G						15p§	4 0	7.0;0 0V-60V$	60 Ø	850	50M				F27w
103	GC1765							15p	4 0	4 2-37	60	900	50M		400m	Si	DO7
104	IC515-30,A,B,C							15p%	4 0	30.000-6 000	50	300	50M		500m	Si	M214a
105	IC1015-30,A,B,C							15p%	4 0	30 000-4 500	100	300	50M		500m	Si	M214a
106	KV123,A,B,C,D							15p%	4 0	7 0-38	25	50	50M		400m	Si	DO14
107	KV124,A,B,C,D							15p%	4 0	5 1-38	50	125	50M		400m	Si	DO14
108	KV125,A,B,C,D							15p%	4 0	4.4-38	80	50	50M		400m	Si	DO14
109	KV126,A,B,C,D							15p%	4 0	3.9-38	100	100	50M		400m	Si	DO14
110	KV152							15p	4 0	4.4-38	80	100	50M		400m	Si	DO14

SYMBOLS AND CODES EXPLAINED IN INTERPRETER

10 VOLTAGE VARIABLE CAPACITORS & VARACTOR DIODES

IN ORDER OF (1) TYPICAL CAPACITANCE, (2) TEST VOLTAGE, and (3) TYPE No.

LINE No	3 TYPE No	MINIMUM CUTOFF FREQUENCY (Corresponding to Type Numbers in previous column) (Hz)	(Hz)	(Hz)	(Hz)	(Hz)	(Hz)	TYP. CAP. 1 CAP C_J (F)	2 at TEST VOLT (V)	CAPACITANCE RANGE (for V = 0 to PIV) Ø - at TEST VOLT (pF)	PIV (V)	Q FACTOR MIN. Q	at TEST FREQ (Hz)	MAX. SER. RES. Rs (Ω)	MAX. DISS. @ 25°C (W)	DESCRIPTION MAT.	DWG. No.
1	KV158							15p	4 0	7 0-38	25	150	50M		400m	Si	DO14
2	KV165							15p	4 0	3 9-38	100	75	50M		400m	Si	DO14
3	KV208							15p	4.0	3 2-38	150	75	50M		400m	Si	DO14
4	KV209							15p	4 0	3 2-38	150	100	50M		400m	Si	DO14
5	KV308							15p	4 0	6.2;2 0V-200V$	200	75	50M		400m	Si	DO14
6	KV309							15p	4 0	6.2,2.0V-200V$	200	100	50M		400m	Si	DO14
7	KV5142							15p	4 0	2.8,4 0V-60V$	90	250	50M		400m	Si	DO7
8	MA4019D							15p	4 0	5 2$	110 ⊘	100	50M			Si#$	Z45
9	MA4273D							15p	4 0	12 - 18Ø	110	100	05G		.50	Si	A31e
10	MA45037							15pt	4 0	2 6;2 0-30V$	35 ⊘	400	50G		400m	Si$	A31e
11	MC15Δ							15p	4 0		60 †	10	50M			Si	A1au
12	MC102,A,B							15p%	4 0	5 0;2 0-100V$	110 ⊘	150	50M		500m	Si$#	A1ce
13	MC108,A,B							15p%	4 0	4 0,2 0-75V$	85 ⊘	150	50M		500m	Si$#	A1ce
14	MC114,A,B							15p%	4 0	3 0,2 0-40V$	50 ⊘	150	50M		500m	Si$#	A1ce
15	MC415							15p	4 0		60 †	100	50M			Si	A1au
16	MV15,A							15p	4 0	±3 0,±1.5Ø	25	13	.05G		25	Si	A109
17	MV15E	35G						15p	4 0	±3 0,±1 5Ø	100	7 0	.05G		25	Si	A109
18	MV830							15p§	4 0	13.5-16.5Ø	30 ⊘	30	50M		400m	Si	DO7
19	MV1628							15p§	4 0	13 5 - 16.5Ø	20 ⊘	250	05G		.40	Si$	DO7
20	MV1728							15p§	4.0	13 5 - 16 5Ø	30 ⊘	450	.05G		40	Si$	DO7
21	MV1728A							15p	4 0		30 ⊘	450	50M		400m	SiΔ#	DO7
22	MV1870A							15pt	4 0	13 5-16 5Ø	60			500m	5.0	Si	F27a
23	MV1870B							15pt	4 0	13 5-16 5Ø	60			500m	5 0	Si	F10a
24	MV1870D							15pt	4 0	13 5-16 5Ø	60			500m	5.0	Si	F56e
25	MV2105							15p§	4 0	13 5-16 5Ø	30	400	50M		280m	Si	C103
26	MV2205							15p§	4 0	13-17Øt	25 ⊘	200	50M		280m	Si	C103
27#	MV9152							15p	4	5 0;3 0-10V	30 ⊘	40	50M		150m	SiΔ	DO7
28	NPC104-1							15p	4.0	12 - 18Ø	20	20	05G		25	Si	DO7
29	NPQ199							15p	4 0	9 0 - 20Ø	15	120	05G		25	Si	DO7
30	PC123,A,B							15p%	4 0	4 6; 50-30V$	30 $	50	50M			Si*	DO14Δ
31	PC124,A,B							15p%	4 0	5 9, 50-50V$	50 $	125	50M			Si*	DO14Δ
32	PC125,A,B							15p%	4 0	7 0, 50-80V$	80 $	50	50M			Si*	DO14Δ
33	PC126,A,B							15p%	4 0	7 9, 50-100V$	100 $	100	50M			Si*	DO14Δ
34	PC401							15pΔ	4 0	2 4, 10-4 0V$	125 $	175	50M		500m	Si*	DO14
35	PC402							15pΔ	4 0	2 4; 10-4 0V$	100 $	175	50M		500m	Si*	DO14
36	PC403							15pΔ	4 0	2 4,.10-4.0V$	75 $	175	50M		500m	Si*	DO14
37	PC404							15pΔ	4 0	2 4, 10 - 4 0V$	50 $	175	50M		500m	Si*	DO14
38	PC405							15pΔ	4 0	2 4, 10 - 4 0V$	30 $	175	50M		500m	Si*	DO14
39	PC407							15pΔ	4 0	2 4; 10 - 4.0V$	125 $	150	50M		500m	Si*	DO14
40	PC408							15pΔ	4 0	2 4; 10 - 4 0V$	100 $	150	50M		500m	Si*	DO14
41	PC409							15pΔ	4 0	2 4, 10 - 4 0V$	75 $	150	50M		500m	Si*	DO14
42	PC410							15pΔ	4 0	2 4, 10 - 4.0V$	50 $	150	50M		500m	Si*	DO14
43	PC411							15pΔ	4 0	2 4, 10 - 4 0V$	30 $	150	50M		500m	Si*	DO14
44	PC412							15pΔ	4.0	2 4, 10 - 4 0V$	150 $	125	50M		500m	Si*	DO14
45	PC413							15pΔ	4 0	2 4; 10 - 4 0V$	125 $	125	50M		500m	Si*	DO14
46	PC414							15pΔ	4 0	2 4; 10 - 4 0V$	100 $	125	50M		500m	Si*	DO14
47	PC415							15pΔ	4 0	2 4, 10 - 4 0V$	75 $	125	50M		500m	Si*	DO14
48	PC416							15pΔ	4 0	2 4, 10 - 4 0V$	50 $	125	50M		500m	Si*	DO14
49	PC417							15pΔ	4.0	2 4, 10 - 4 0V$	30 $	125	50M		500m	Si*	DO14
50	PC418							15pΔ	4 0	2 4, 10 - 4 0V$	150 $	100	50M		500m	Si*	DO14
51	PC419							15pΔ	4 0	2 4, 10 - 4 0V$	125 $	100	50M		500m	Si*	DO14
52	PC420							15pΔ	4 0	2.4; 10 - 4 0V$	100 $	100	50M		500m	Si*	DO14
53	PC421							15pΔ	4 0	2 4, 10 - 4 0V$	75 $	100	50M		500m	Si*	DO14
54	PC422							15pΔ	4 0	2 4; 10 - 4 0V$	50 $	100	50M		500m	Si*	DO14
55	PC423							15pΔ	4 0	2.4, 10 - 4 0V$	30 $	100	50M		500m	Si*	DO14
56	PC424							15pΔ	4 0	2 4; 10 - 4 0V$	150 $	75	50M		500m	Si*	DO14
57	PC425							15pΔ	4 0	2.4, 10 - 4 0V$	125 $	75	50M		500m	Si*	DO14
58	PC426							15pΔ	4 0	2.4, 10 - 4.0V$	100 $	75	50M		500m	Si*	DO14
59	PC427							15pΔ	4 0	2.4; 10 - 4 0V$	75 $	75	50M		500m	Si*	DO14
60	PC428							15pΔ	4.0	2 4; 10 - 4 0V$	50 $	75	50M		500m	Si*	DO14
61	PC429							15pΔ	4.0	2.4; 10 - 4.0V$	30 $	75	50M		500m	Si*	DO14
62	PC430							15pΔ	4 0	2.4, 10 - 4 0V$	150 $	50	50M		500m	Si*	DO14
63	PC431							15pΔ	4.0	2 4, 10 - 4.0V$	125 $	50	50M		500m	Si*	DO14
64	PC432							15pΔ	4 0	2 4, .10 - 4 0V$	100 $	50	50M		500m	Si*	DO14
65	PC433							15pΔ	4 0	2 4; 10 - 4 0V$	75 $	50	50M		500m	Si*	DO14
66	PC434							15pΔ	4 0	2 4, 10 - 4 0V$	50 $	50	50M		500m	Si*	DO14
67	PC435							15pΔ	4 0	2 4; .10 - 4 0V$	30 $	50	50M		500m	Si*	DO14
68	PC0602A							15p§Δ	4 0		30 $	200	50M				DO7
69	PC0602B							15p§Δ	4 0		30 $	300	50M				DO7
70	PC0602C							15p§Δ	4 0		30 $	400	50M				DO7
71	PC0602D							15p§Δ	4 0		30 $	500	50M				DO7
72	PC0612A							15p§Δ	4 0		60 $	200	50M				DO7
73	PC0612B							15p§Δ	4 0		60 $	300	50M				DO7
74	PC0612C							15p§Δ	4 0		60 $	400	50M				DO7
75	PC0622A							15p§Δ	4 0		90 $	200	50M				DO7
76	PC0622B							15p§Δ	4 0		90 $	300	50M				DO7
77	PC0632A							15p§Δ	4.0		120 $	200	50M				DO7
78	PC0632B							15p§Δ	4.0		120 $	300	50M				DO7
79	PC0642A							15p§Δ	4 0		150 $	200	50M				DO7
80	PC1402A							15p§Δ	4 0		30 $	200	50M				A2u
81	PC1402B							15p§Δ	4.0		30 $	300	50M				A2u
82	PC1402C							15p§Δ	4.0		30 $	400	50M				A2u
83	PC1402D							15p§Δ	4.0		30 $	500	50M				A2u
84	PC1412A							15p§Δ	4 0		60 $	200	50M				A2u
85	PC1412B							15p§Δ	4 0		60 $	300	50M				A2u
86	PC1412C							15p§Δ	4 0		60 $	400	50M				A2u
87	PC1422A							15p§Δ	4 0		90 $	200	50M				A2u
88	PC1422B							15p§Δ	4.0		90 $	300	50M				A2u
89	PC1432A							15p§Δ	4.0		120 $	200	50M				A2u
90	PC1442A							15p§Δ	4.0		150 $	200	50M				A2u
91	PC2602A							15p§Δ	4 0		30 $	200	50M				DO7
92	PC2602B							15p§Δ	4 0		30 $	300	50M				DO7
93	PC2602C							15p§Δ	4 0		30 $	400	50M				DO7
94	PC2602D							15p§Δ	4.0		30 $	500	50M				DO7
95	PC2612A							15p§Δ	4 0		60 $	200	50M				DO7
96	PC2612B							15p§Δ	4 0		60 $	300	50M				DO7
97	PC2612C							15p§Δ	4 0		60 $	400	50M				DO7
98	PC2612D							15p§Δ	4 0		60 $	500	50M				DO7
99	PC2622A							15p§Δ	4.0		90 $	200	50M				DO7
100	PC2622B							15p§Δ	4 0		90 $	300	50M				DO7
101	PC2622C							15p§Δ	4 0		90 $	400	50M				DO7
102	PC2632A							15p§Δ	4 0		120 $	200	50M				DO7
103	PC2632B							15p§Δ	4 0		120 $	300	50M				DO7
104	PC2632C							15p§Δ	4 0		120 $	400	50M				DO7
105	PC2642A							15p§Δ	4.0		150 $	200	50M				DO7
106	PC2642B							15p§Δ	4.0		150 $	300	50M				DO7
107	PC2642C							15p§Δ	4.0		150 $	400	50M				DO7
108▼	PG115,A,B							15p%	4 0	4.4;2 0V-65V$	65 $	200	50M				DO7
109▼	PG215,A,B							15p%	4.0	3 9;2.0V-65V$	65 $	200	50M				DO7
110▼	PG315,A,B							15p%	4 0	4.5,2.0V-50V$	50 $	300	50M				DO7

SYMBOLS AND CODES EXPLAINED IN INTERPRETER

10 VOLTAGE VARIABLE CAPACITORS & VARACTOR DIODES

IN ORDER OF (1) TYPICAL CAPACITANCE, (2) TEST VOLTAGE, and (3) TYPE No.

LINE No.	3 TYPE No.	MINIMUM CUTOFF FREQUENCY (Corresponding to Type Numbers in previous column) (Hz)	(Hz)	(Hz)	(Hz)	(Hz)	(Hz)	TYP. CAP. 1 CAP. C_J (F)	2 at TEST VOLT (V)	CAPACITANCE RANGE (for V = 0 to PIV) Ø - at TEST VOLT. (pF)	PIV (V)	Q FACTOR MIN. Q	at TEST FREQ (Hz)	MAX SER. RES. Rs (Ω)	MAX. DISS. @ 25°C (W)	DESCRIPTION MAT.	DWG No.
1	PV1432							15p$	4 0		120	400	500M				A2u
2	PV1870D							15pΔ	4.0	3.0;4.0V-60V$	60 $	200	100M		2 0	*	F56j
3	PVM4150,A,B							15p%	4 0	7 55,0 0V-40V$	40 $	70	1.0G		2 0	*	F56j
4	PVM6150,A,B							15p%	4 0	9 10,0 0V-60V$	60	45	1 0G		2 0	*	F56j
5	SQ1228A,B,C							15p$%	4 0		30 ⊘	900	50M		250m	Si#$	A1ah
6	SQ1278A,B,C							15p$%	4.0		30 ⊘	450	50M		250m	Si#$	A1ah
7	SQ1728,B,C							15p$%	4 0	13 5-16 5Ø	30 ⊘	900	50M		500m	Si#$	DO7
8	SQ5445A							15p%	4 0		30 ⊘	400	50M		400m		DO7
9	SQ5445B							15p%	4 0		30 ⊘	400	50M		400m		DO7
10	SQ5445C							15p%	4 0		30 ⊘	400	50M		400m		DO7
11	SQ5465A							15p%	4.0		30 ⊘	550	50M		400m		DO7
12	SQ5465B							15p%	4.0		30 ⊘	550	50M		400m		DO7
13	SQ5465C							15p%	4.0		30 ⊘	550	50M		400m		DO7
14#	SV77E							15p	4.0	12 - 19Ø	90			3 0	5 0	Si$	
15	V15⊘,A⊘,B⊘							15p	4 0	±3 0,1 5, 75Ø	25	13	50M		50	Si*	DO14
16	V15%,A%,B%,C,D							15p%	4 0	6 5-39	25 $	15	50M		500m		A1st
17	V15EΔ,EAΔ,EBΔ,EC,ED							15p%	4.0	3 3-39	100 $	7.0	50M		500m	Si$	DO14
18	V15E⊘,EA⊘,EB⊘							15p%	4 0	±3.0,1 5, 75Ø	100	4 5	50M		500m	Si*	DO14
19	V915Δ,AΔ,BΔ,CΔ,DΔ							15p%	4 0	6.5 - 39	25 $	15	05G		50	Si$	DO14
20	V915⊘,A⊘,B⊘							15p	4.0	±3 0,1 5, 75Ø	25	15	50M		.50	Si*	DO14
21	V915%,A%,B%,C%,D%							15p%	4.0	6.5-39	25 $	15	50M		500m		A1st
22	V915EΔ,EAΔ,EBΔ,EC,ED							15p%	4 0	3 3-39	100 $	7 0	50M		500m	Si$	DO14
23	V915E⊘,EA⊘,EB⊘							15p%	4 0	±3 0,1 5, 75Ø	100	15	5 0M		500m	Si*	DO14
24	VA123							15p	4 0	38 - 7.0	25	50	05G		50	Si$	A131
25	VA124							15p	4 0	38 - 5 1	50	125	05G		.50	Si$	A131
26	VA125							15p	4 0	38 - 4 4	80	50	05G		.50	Si$	A131
27	VA126							15p	4 0	38 - 3 9	100	100	05G		50	Si$	A131
28	VA152							15p	4 0	38 - 4 4	80	100	05G		.50	Si$	A131
29	VA158							15p	4 0	38 - 7 0	25	150	05G		50	Si$	A131
30	VA165							15p	4 0	38 - 3 9	100	75	05G		50	Si$	A131
31	VA208	37G						15p	4 0	38 - 3.2	150	75	.05G	2 9	.50	Si$	A131
32	VA209	50G						15p	4 0	38 - 3.2	150	100	05G	2.2	50	Si$	A131
33	VA308							15p	4 0	6 2,2.0 - 200V$	200	75	50M		50	Si$	DO14Δ
34	VA309							15p	4.0	6 2;2.0 - 200V$	200	100	50M		50	Si$	DO14Δ
35	VA5142							15p	4 0	13.5-16.5	90	250	50M		400m	Si	DO7
36	VA5142A							15p	4 0	14.3-15.7	90	250	50M		400m	Si	DO7
37	VC15,A,B							15p%	4.0	4.7 - 39	50 $	10	.05G				DO7
38	VC215,A,B							15p%	4 0	4 7 - 39	50 $	25	05G				DO7
39	VC314,A,B							15p%	4 0	3.0;1.0 - 25V$	25 $	50	50M				DO7
40	VC315,A,B							15p%	4.0	4.0;2V-80V$	80 $	50	.05G				DO7
41	VC414,A,B							15p%	4 0	3 0;1V-25V$	25 $	100	05G				DO7
42	VC415,A,B							15p%	4 0	4.0;1V-50V$	50 $	100	.05G				DO7
43	VC416,A,B							15p%	4 0	4.0;2.0 - 80V$	100 $	100	50M				DO7
44	VC615,A,B							15p%	4.0	3.0;1V-25V$	40 $	200	.05G				DO7
45	VC616,A,B							15p%	4.0	3 0;1V-25V$	40 $	300	.05G				DO7
46	VC824,A,B							15p%	4.0	6 5 - 39	25 $	13	.05G				DO7
47	VC844,A,B							15p%	4.0	3.3 - 39	100 $	4 5	50M				DO7
48	VG115,A,B,C,D							15p%	4 0	4 0,2.0 - 65V$	70	200	50M		40	Si$	DO7
49	VG215,A,B,C,D							15p%	4.0	4 4,2.0 - 65V$	70	200	50M		40	Si$	DO7
50	VG315,A,B,C,D							15p%	4 0	3 95,2 0 - 50V$	55	300	50M		40	Si$	DO7
51	VH15							15pΔ	4 0	39 - 6 5	25 $	13	05G		50	Si$	DO14
52	VH15E							15pΔ	4 0	39 - 3 3	100 $	4 5	50M		.50	Si$	DO14
53	VH123	10G⊘						15pΔ	4 0	3 5$	25 $	50	50M	4.3	500m	Si$	DO14
54	VH124	30G⊘						15pΔ	4.0	4 0$	50 $	125	50M	1.7	500m	Si$	DO14
55	VH125	20G⊘						15pΔ	4.0	4 0$	80 $	50	50M	4.3	500m	Si$	DO14
56	VH126	40G⊘						15pΔ	4.0	5.2$	100 $	100	50M	2.1	.50	Si$	DO14
57	VH162	30G⊘						15pΔ	4.0	5 2$	100 $	75	50M	2.8	.50	Si$	DO14
58	VH169	40G⊘						15pΔ	4.0	4 0$	80 $	100	50M	2.1	500m	Si$	DO14
59	VH177	20G⊘						15pΔ	4 0	4 0$	50 $	75	50M	2.8	500m	Si$	DO14
60	VH185	30G⊘						15pΔ	4.0	3.5$	25 $	150	50M	1.4	500m	Si$	DO14
61	VH204	50G⊘						15pΔ	4.0	6 0$	150 $	100	50M	2.1	50	Si$	DO14
62	VH205	35G⊘						15pΔ	4 0	6.0$	150 $	60	50M	3.7	50	Si$	DO14
63	VH227	40G⊘						15pΔ	4 0	6 7$	200 $	50	50M	4 3	50	Si$	DO14
64	VH915							15pΔ	4.0	39 - 6 5	25 $	13	05G		50	Si$	DO14
65	VH915E							15pΔ	4 0	39 - 3 3	100 $	4 5	50M		500m	Si$	DO14
66	VM401,A,B,C,D							15p%	4 0	4.5;4 0 -125V$	138	175			500m	Si$	DO14
67	VM402,A,B,C,D							15p%	4 0	4.2,4.0 -100V$	110	175			500m	Si$	DO14
68	VM403,A,B,C,D							15p%	4.0	3 4,4.0 - 75V$	83	175			500m	Si$	DO14
69	VM404,A,B,C,D							15p%	4 0	2 9,4 0 - 50V$	55	175			500m	Si$	DO14
70	VM405,A,B,C,D							15p%	4 0	2 3,4 0 - 30V$	33	175			500m	Si$	DO14
71	VM406,A,B,C,D							15p%	4 0	4 8,4.0 - 150V$	165	150			500m	Si$	DO14
72	VM407,A,B,C,D							15p%	4 0	4 5,4 0 - 125V$	138	150			500m	Si$	DO14
73	VM408,A,B,C,D							15p%	4 0	4.2;4 0 - 100V$	110	150			500m	Si$	DO14
74	VM409,A,B,C,D							15p%	4.0	3.4;4 0 - 75V$	83	150			500m	Si$	DO14
75	VM410,A,B,C,D							15p%	4 0	2.9;4 0 - 50V$	55	150			500m	Si$	DO14
76	VM411,A,B,C,D							15p%	4.0	2.3;4.0 - 30V$	33	150			500m	Si$	DO14
77	VM412,A,B,C,D							15p%	4 0	4.8;4 0 - 150V$	165	125			500m	Si$	DO14
78	VM413,A,B,C,D							15p%	4 0	4.5;4.0 - 125V$	138	125			500m	Si$	DO14
79	VM414,A,B,C,D							15p%	4 0	4.2;4.0 - 100V$	110	125			500m	Si$	DO14
80	VM415,A,B,C,D							15p%	4 0	3.4;4.0 - 75V$	83	125			500m	Si$	DO14
81	VM416,A,B,C,D							15p%	4 0	2 9;4 0 - 50V$	55	125			500m	Si$	DO14
82	VM417,A,B,C,D							15p%	4.0	2 3;4 0 - 30V$	33	125			500m	Si$	DO14
83	VM418,A,B,C,D							15p%	4 0	4.8;4.0 - 150V$	165	100			500m	Si$	DO14
84	VM419,A,B,C,D							15p%	4.0	4.5;4.0 - 125V$	138	100			500m	Si$	DO14
85	VM420,A,B,C,D							15p%	4.0	4.2;4.0 - 100V$	110	100			500m	Si$	DO14
86	VM421,A,B,C,D							15p%	4 0	3.4;4 0 - 75V$	83	100			500m	Si$	DO14
87	VM422,A,B,C,D							15p%	4.0	2.9;4.0 - 50V$	55	100			500m	Si$	DO14
88	VM423,A,B,C,D							15p%	4 0	2.3;4.0 - 25V$	33	100			500m	Si$	DO14
89	VM424,A,B,C,D							15p%	4.0	4 8;4.0 - 150V$	165	75			500m	Si$	DO14
90	VM425,A,B,C,D							15p%	4.0	4 5;4.0 - 125V$	138	75			500m	Si$	DO14
91	VM426,A,B,C,D							15p%	4.0	4.2;4 0 - 100V$	110	75			500m	Si$	DO14
92	VM427,A,B,C,D							15p%	4.0	3 4;4.0 - 75V$	83	75			500m	Si$	DO14
93	VM428,A,B,C,D							15p%	4.0	2.9;4 0 - 50V$	55	75			500m	Si$	DO14
94	VM429,A,B,C,D							15p%	4.0	2.3;4.0 - 30V$	33	75			500m	Si$	DO14
95	VM430,A,B,C,D							15p%	4.0	4.8;4.0 - 150V$	165	50			500m	Si$	DO14
96	VM431,A,B,C,D							15p%	4.0	4.5;4.0 - 125V$	138	50			500m	Si$	DO14
97	VM432,A,B,C,D							15p%	4.0	4.2,4.0 - 100V$	110	50			500m	Si$	DO14
98	VM433,A,B,C,D							15p%	4.0	3.4;4 0 - 75V$	83	50			500m	Si$	DO14
99	VM434,A,B,C,D							15p%	4.0	2.9;4 0 - 50V$	55	50			500m	Si$	DO14
100	VM435,A,B,C,D							15p%	4.0	2.3;4 0 - 25V$	33	50			500m	Si$	DO14
101	VVC207,A,B,C,D							15p%	4.0		25	13	50M			Si	DO7
102	VVC208,A,B,C,D							15p%	4.0		100	4 5	50M			Si	DO7
103	VVC405,A,B,C,D							15p%	4.0	±3 0Ø	25	50	.05G			Si	DO7
104	VVC406,A,B,C,D							15p%	4.0	±3.0Ø	50	125	05G			Si	DO7
105	VVC407,A,B,C,D							15p%	4 0	±3.0Ø	80	50	.05G			Si	DO7
106	VVC408,A,B,C,D							15p%	4.0	±3.0Ø	100	100	.05G			Si	DO7
107	VVC707,A,B,C,D							15p%	4 0		30	50	50M			Si	DO7
108	VVC733,A,B,C,D							15p%	4.0		30	30	50M			Si	DO7

SYMBOLS AND CODES EXPLAINED IN INTERPRETER

10 VOLTAGE VARIABLE CAPACITORS & VARACTOR DIODES

IN ORDER OF (1) TYPICAL CAPACITANCE, (2) TEST VOLTAGE, and (3) TYPE No.

LINE No	3 TYPE No.	MINIMUM CUTOFF FREQUENCY (Corresponding to Type Numbers in previous column) (Hz)	(Hz)	(Hz)	(Hz)	(Hz)	(Hz)	TYP. CAP. 1 CAP. Cj (F)	2 at TEST VOLT (V)	CAPACITANCE RANGE (for V = 0 to PIV) Ø - at TEST VOLT. (pF)	PIV (V)	Q FACTOR MIN. Q	at TEST FREQ (Hz)	MAX. SER RES. Rs (Ω)	MAX DISS. @ 25°C (W)	DESCRIPTION MAT.	DWG. No.
1	VVC734,A,B,C,D							15p%	4.0		30	450	50M			Si	DO7
2	VVC735,A,B,C,D							15p%	4 0		20	250	50M			Si	DO7
3	VVC813,A,B,C,D							15p%	4.0		60	10	50M			Si	DO7
4	VVC814,A,B,C,D							15p%	4.0		60	100	50M			Si	DO7
5	VVC855,A,B,C,D							15p%	4 0		30	100	50M			Si	DO7
6	VVC856,A,B,C,D							15p%	4.0		40	200	50M			Si	DO7
7	VVC857,A,B,C,D							15p%	4 0		40	300	50M			Si	DO7
8	VVC858,A,B,C,D							15p%	4 0		60	100	50M			Si	DO7
9	VVC859,A,B,C,D							15p%	4 0		110	100	50M			Si	DO7
10	VVC916,A,B,C,D							15p%	4 0		25	150	50M			Si	DO7
11	VVC917,A,B,C,D							15p%	4.0		50	75	50M			Si	DO7
12	VVC918,A,B,C,D							15p%	4 0		80	100	50M			Si	DO7
13	VVC919,A,B,C,D							15p%	4 0		100	75	50M			Si	DO7
14	VVC920,A,B,C,D							15p%	4 0		150	60	50M			Si	DO7
15	VVC921,A,B,C,D							15p%	4.0		150	100	50M			Si	DO7
16	VVC955,A,B,C,D							15p%	4 0		50		50M			Si	DO7
17	VVC957,A,B,C,D							15p%	4 0			80	05G			Si	DO7
18	VVC1006,A,B,C,D							15p%	4 0		40	300	50M			Si	DO7
19#	ZC704							15pt	4 0	3 0,2 0V-30V$	30	450	50M		400m	Si	DO7
20#	SFD451A	10G						15p	6.0	10 - 20Ø	30				3.0 ⊘	Si$	C16u
21#	SFD452A	10G						15p	6.0	10 - 20Ø	60				3.0 ⊘	Si$	C16u
22#	SFD453A	10G						15p	6 0	10 - 20Ø	90				3 0 ⊘	Si$	C16u
23#	SFD454A	10G						15p	6 0	10 - 20Ø	120				3 0 ⊘	Si$	C16u
24	VAB820N26,N27,N28	40						15pΔ	6 0	10-20Ø	150					Si	Z42
25▼#	1S892							15p	10	38-16 5Ø	20	160	20M			Si	A185e
26#	BB102/16							16p⊘	2.0	14 8 - 16 2Ø	50			1 3	25 §	SiΔ	DO7
27#	MA332A	1 0G						16p	10	12 - 19Ø	35	40	25M			SiΔ	A138b
28#	BB102/17							17p⊘	2 0	15.8 - 17.2Ø	50			1 3	25 §	SiΔ	DO7
29	A712-3A,B,C,D	5 0G	10G	15G	20G			17p	6 0	14-21Ø	24				3 0	SiΔ$	F11
30	A712-4A,B,C	5 0G	10G	15G				17pt	6.0	14 - 21Ø	30				3 0	Si$Δ	F11
31	A712-5A,B,C	5.0G	10G	15G				17pt	6.0	14 - 21Ø	45				3 0	Si$Δ	F11
32	A712-6A,B	5 0G	10G					17pt	6 0	14 - 21Ø	60				3 0	Si$Δ	F11
33	A712-7A,B	5 0G	10G					17pt	6.0	14 - 21Ø	90				3 0	Si$Δ	F11
34	A712-8A	5 0G						17pt	6 0	14 - 21Ø	120				3 0	Si$Δ	F11
35	MA4289							17p	6 0		30			3 0		Si	F3a
36	PH1206-1,2,3,4		5.0G	10G	15G	20G		17p	6 0	14 - 20Ø	6 0		⊘ 10G			Si$	F58
37	PH1206A,B	30G	40G					17p	6.0	14-20Ø	6 0		⊘ 10G			Si$	F58
38	PH1216-1,2,3,4		5 0G	10G	15G	20G		17p	6 0	14 - 20Ø	15		⊘ 10G			Si$	F58
39	PH1216A,B	30G	40G					17p	6.0	14-20Ø	15		⊘ 10G			Si$	F58
40	PH1226-1,2,3,4		5 0G	10G	15G	20G		17p	6 0	14 - 20Ø	24		⊘ 10G			Si$	F58
41	PH1226A	30G						17p	6 0	14-20Ø	24		⊘ 10G			Si$	F58
42	PH1236-1,2,3	5.0G	10G	15G				17p	6.0	14 - 20Ø	30		⊘ 10G			Si$	F58
43	PH1246-1,2,3	5 0G	10G	15G				17p	6 0	14 - 20Ø	45		⊘ 10G			Si$	F58
44	PH1256-1,2,3	5.0G	10G	15G				17p	6 0	14 - 20Ø	60		⊘ 10G			Si$	F58
45	PH1266-1,2,3	5.0G	10G	15G				17p	6.0	14 - 20Ø	90		⊘ 10G			Si$	F58
46	PH1276-1,2,3	5 0G	10G	15G				17p	6.0	14 - 20Ø	120		⊘ 10G			Si$	F58
47	PH1286-1	5.0G						17p	6 0	14 - 20Ø	150		⊘ 10G			Si$	F58
48	PH1296-1	5 0G						17p	6 0	14 - 20Ø	200		⊘ 10G			Si$	F58
49	PL0106-1,2,3,4		5 0G	10G	15G	20G		17p	6 0	14 - 20Ø	6 0		⊘ 10G			Si	F27d
50	PL0106A,B	30G	40G					17p	6.0	14-20Ø	6 0		⊘ 10G			Si	F27d
51	PL0116-1,2,3,4		5 0G	10G	15G	20G		17p	6 0	14 - 20Ø	15		⊘ 10G			Si	F27d
52	PL0116A,B	30G	40G					17p	6 0	14-20Ø	15		⊘ 10G			Si	F27d
53	PL0126-1,2,3,4		5 0G	10G	15G	20G		17p	6.0	14 - 20Ø	24		⊘ 10G			Si	F27d
54	PL0126A	30G						17p	6.0	14-20Ø	24		⊘ 10G			Si	F27d
55	PL0136-1,2,3	5 0G	10G	15G				17p	6.0	14 - 20Ø	30		⊘ 10G			Si	F27d
56	PL0146-1,2,3	5 0G	10G	15G				17p	6.0	14 - 20Ø	45		⊘ 10G			Si	F27d
57	PL0156-1,2,3	5 0G	10G	15G				17p	6.0	14 - 20Ø	60		⊘ 10G			Si	F27d
58	PL0166-1,2,3	5 0G	10G	15G				17p	6 0	14 - 20Ø	90		⊘ 10G			Si	F27d
59	PL0176-1,2,3	5 0G	10G	15G				17p	6 0	14 - 20Ø	120		⊘ 10G			Si	F27d
60	PL0186-1	5 0G						17p	6 0	14 - 20Ø	150		⊘ 10G			Si	F27d
61	SD11E18							18p	0.0	18 - 36	18			1 0		Si	P3
62	SD12E18							18p	0 0	18 - 36	18			1 0		Si	F3a
63	SD22E18							18p	0.0	18 - 36	18			1.0		Si	F11
64	SD32E18							18p	0.0	18 - 36	18			1 0		Si	F21
65	SD42E18							18p	0.0	18 - 36	18			1 0		Si	F9a
66	SDGPE18							18p	0.0	18 - 36	18			1 0		Si	DO7
67	VAT14N16,N18,N20							18pt△	0 0	16 - 19 9Ø	120	475	50M				Z42
68	VAT54N16,N18,N20							18pt△	0 0	16 - 19.9Ø	60	1000	50M				Z42
69	VAT74N16,N18,N20							18pt△	0 0	16 - 19 9Ø	45	1400	50M				Z42
70#	BB102/18							18p⊘	2 0	16 8 - 18 2Ø	50			1 3	25 §	SiΔ	DO7
71	1N4791,A,B,C,D							18p%	4 0	2 48,0 - 4.0V$	20 $	15	50M			Si	DO14
72	1N4806,A,B,C,D							18p%	4 0	2 48,0 - 4 0V$	90 $	15	50M	50		Si	DO14
73	JAN1N4806A,B							18p%	4 0	2 48; 10 - 40V$	90 $	15	50M		500m	Si	A1dd
74	1N5143,A							18pΔ	4 0	2 8;4 0 - 60V$	60 ⊘	250	50M		400m	Si	DO7
75	JAN1N5143A							18p	4 0	17.1 - 18 9Ø		250	50m		.40	Si	DO7
76	1N5446							18p%	4 0	2 6,2V-30V$	30	350	50M		400m	Si	DO7
77	1N5446A							18p%	4 0	2.6;2V-30V$	30	350	50M		400m	Si	DO7
78	1N5446B							18p%	4 0	2 6;2V-30V$	30	350	50M		400m	Si	DO7
79	1N5446C							18p%	4 0	2 6;2V-30V$	30	350	50M		400m	Si	DO7
80	1N5446D							18p%	4 0	2.6,2V-30V$	30	350	50M		400m	Si	DO7
81	1N5466							18p%	4 0	2.9;2V-30V$	30	500	50M		400m	Si	DO7
82	1N5466A							18p%	4 0	2 9;2V-30V$	30	500	50M		400m	Si	DO7
83	1N5466B							18p%	4 0	2 9;2V-30V$	30	500	50M		400m	Si	DO7
84▼	JAN1N5466B							18p	4 0	17.1-18 9Ø	30 ⊘	500	50M		400m	Si	DO7
85	1N5466C							18p%	4 0	2 9,2V-30V$	30	500	50M		400m	Si	DO7
86	1N5466D							18p%	4.0	2 9;2V-30V$	30	500	50M		400m	Si	DO7
87	1N5686,A,B							18p%	4 0	3.85;2.0V-40V$	40 $	500	50M		400m	*	DO7
88	1N5701,A,B							18p%	4 0	3 50,4 0V-60V$	60 $	375	50M		400m	*	DO7
89	CV1871B							18p	4 0	16.20-19 80	60	200	100M		5 0	Si	F27x⊘
90	CV1871D							18p	4 0	16 20-19.80	60	200	100M		5 0	Si	F56n⊘
91▼	CV5018							18p	4 0	2.5,2 0V-30V$	30	350	50M		400m	Si	DO7
92	D1730,B,C							18pt%	4 0	16.2-19 8Ø	30 ⊘	450	50M		400m	Si#$	A1st
93	D6907							18p	4 0	3 0;2-30V$	30	500	50M		40	Si$	DO7
94#	DC4215							18p	4 0		60	250	50M			Si	M524
95#	DC4220							18p	4 0		60	450	10M			Si	C16f
96	G030018-1R							18p	4 0	3 4;1 0 - 30V$	30	170 Ø	50M			Si	DO7
97	G030018-2R							18p	4.0	3 4;1 0 - 30V$	30	330 Ø	50M			Si	DO7
98	G030018-3R							18p	4 0	3 4;1 0 - 30V$	30	530 Ø	50M			Si	DO7
99	G060018-1R							18p	4 0	5 0,1 0 - 60V$	60	170 Ø	50M			Si	DO7
100	G060018-2R							18p	4 0	5 0,1 0 - 60V$	60	330 Ø	50M			Si	DO7
101	G060018-3R							18p	4 0	5.0;1 0 - 60V$	60	530 Ø	50M			Si	DO7
102	GC1716	42G						18p$	4 0	7 0,0 0V-60V$	60 ⊘	850	50M				F27w
103	GC1766							18p	4 0	5 8-45	60	800	50M		400m	Si	DO7
104	IC518-30,A,B,C							18p%	4 0	35 000-7 500	50	300	50M		500m	Si	M214a
105	IC1018-30,A,B,C							18p%	4 0	35 000-5 500	100	300	50M		500m	Si	M214a
106	KV5143							18p	4 0	2 8,4 0V-60V$	90	250	50M		400m	Si	DO7
107	MA45016							18pt	4 0	4 0;2 0 - 60V$	75 ⊘	100	50G		350m	Si$	A31e
108	MA45038							18pt	4 0	2 6,2 0 - 30V$	35 ⊘	350	50G		400m	Si$	A31e
109	MV831							18p$	4 0	16 2 - 19.8Ø	30 ⊘	25	50M		40	Si	DO7
110	MV1630							18p$	4 0	16 2 - 19.8Ø	20 ⊘	250	05G		40	Si$	DO7

SYMBOLS AND CODES EXPLAINED IN INTERPRETER

10 VOLTAGE VARIABLE CAPACITORS & VARACTOR DIODES

IN ORDER OF (1) TYPICAL CAPACITANCE, (2) TEST VOLTAGE, and (3) TYPE No.

LINE No.	TYPE No.	MINIMUM CUTOFF FREQUENCY (Corresponding to Type Numbers in previous column) (Hz)	(Hz)	(Hz)	(Hz)	(Hz)	(Hz)	TYP. CAP. 1 CAP. Cj (F)	2 at TEST VOLT (V)	CAPACITANCE RANGE (for V = 0 to PIV) Ø - at TEST VOLT. (pF)	PIV (V)	Q FACTOR MIN. Q	at TEST FREQ (Hz)	MAX. SER. RES. Rs (Ω)	MAX. DISS. @ 25°C (W)	DESCRIPTION MAT.	DWG. No.
1	MV1730							18p§	4.0	16.2 - 19.8Ø	30 ⊘	450	.05G		.40	Si$	DO7
2	MV1730A							18p	4.0		30 ⊘	450	50M		400m	Si△#	DO7
3	MV2106							18p§	4.0	16.2-19.8Ø	30	350	50M		280m	Si	C103
4	PVM4180,A,B							18p%	4.0	7 60;0 0V-40V$	40 $	65	1.0G		2.0	*	F56j
5	PVM6180,A,B							18p%	4.0	9.20;0.0V-60V$	60	40	1 0G		2.0	*	F56j
6	SQ1230A,B,C							18p§%	4.0		30 ⊘	900	50M		250m	Si#$	A1ah
7	SQ1280A,B,C							18p§%	4.0		30 ⊘	450	50M		250m	Si#$	A1ah
8	SQ1730,B,C							18p§%	4.0	16.2-19 8Ø	30 ⊘	900	50M		500m	Si#$	DO7
9	SQ5446A							18p%	4.0		30 ⊘	350	50M		400m		DO7
10	SQ5446B							18p%	4.0		30 ⊘	350	50M		400m		DO7
11	SQ5446C							18p%	4.0		30 ⊘	350	50M		400m		DO7
12	SQ5466A							18p%	4.0		30 ⊘	500	50M		400m		DO7
13	SQ5466B							18p%	4.0		30 ⊘	500	50M		400m		DO7
14	SQ5466C							18p%	4.0		30 ⊘	500	50M		400m		DO7
15	VA5143							18p	4.0	16.2-19.8	90	250	50M		400m	Si	DO7
16	VA5143A							18p	4.0	17 1-18 9	90	250	50M		400m	Si	DO7
17	VC618,A,B							18p%	4.0	3.0;1V-25V$	40 $	200	.05G				DO7
18	VC619,A,B							18p%	4.0	3 0;1V-25V$	40 $	300	.05G				DO7
19	VVC736,A,B,C,D							18p§	4.0		30	25	50M			Si	DO7
20	VVC737,A,B,C,D							18p§	4.0		20	250	50M			Si	DO7
21	VVC738,A,B,C,D							18p§	4.0		30	450	50M			Si	DO7
22	VVC861,A,B,C,D							18p§	4.0		40	300	50M			Si	DO7
23	VVC1007,A,B,C,D							18p§	4.0		40	300	50M			Si	DO7
24#	ZC705							18pt	4.0	3 2,2 0V-30V$	30	450	50M		400m	Si	DO7
25#	1S1552							18p	6.0	12-25Ø	90			1.8	11	Si$$	S19g
26#	1S1557							18p	6.0	12-25Ø	120			1.8	13	Si$$	S19g
27	MA4341F1							18p	6.0	12 - 25	6.0			500m	1.0	Si	P3a§
28#	BB102/19							19p⊘	2.0	17 8 - 19.2Ø	50			1.3	.25 §	Si△	DO7
29#	1S554							19p	6.0	16 - 21Ø	20	60	20M			Si△	A1dr
30	D5940H							20p	0.0		60 ⊘	1.4kØ	50M				F27g
31	D5950H							20p	0.0		90 ⊘	1.0kØ	50M				F27g
32#	BB102/20							20p	2.0	18.8 - 20.2Ø	50			1 3	.25 §	Si△	DO7
33#	BB106							20p	3.0	4 0-5.6 at 25V	28			600m		Si#	M501
34	1N3552A							20p	4.0		25	25	50M			Si	DO7
35	1N3555							20p	4.0		100	60	50M			Si	A60p
36	1N3945							20p	4 0	4 0 - 6.0	20	7.0	.05G		.50	Si	DO14
37	1N5447							20p%	4.0	2 6,2V-30V$	30	350	50M		400m	Si	DO7
38	1N5447A							20p%	4 0	2.6;2V-30V$	30	350	50M		400m	Si	DO7
39	1N5447B							20p%	4.0	2.6;2V-30V$	30	350	50M		400m	Si	DO7
40	1N5447C							20p%	4.0	2.6;2V-30V$	30	350	50M		400m	Si	DO7
41	1N5447D							20p%	4.0	2.6;2V-30V$	30	350	50M		400m	Si	DO7
42	1N5467							20p%	4.0	2.9;2V-30V$	30	500	50M		400m	Si	DO7
43	1N5467A							20p%	4.0	2 9;2V-30V$	30	500	50M		400m	Si	DO7
44	1N5467B							20p%	4.0	2.9;2V-30V$	30	500	50M		400m	Si	DO7
45▼	JAN1N5467B							20p	4.0	19-21Ø	30 ⊘	500	50M		400m	Si	DO7
46	1N5467C							20p%	4.0	2.9;2V-30V$	30	500	50M		400m	Si	DO7
47	1N5467D							20p%	4.0	2.9;2V-30V$	30	500	50M		400m	Si	DO7
48#	BA102							20pØ△	4 0	.70,4.0 - 10V$	20			3 0		Si#$	DO7
49	CV1872B							20p	4.0	18-22	60	175	100M		5 0	Si	F27x⊘
50	CV1872D							20p	4.0	18-22	60	175	100M		5 0	Si	F56n⊘
51▼	CV5020							20p	4.0	2.5;2.0V-30V$	30	350	50M		400m	Si	DO7
52	D1732,B,C							20pt%	4 0	18-22Ø	30 ⊘	400	50M		400m	Si#$	A1st
53	D6908							20p	4 0	3 2,2-30V$	30	500	50M		400m	Si$	DO7
54▼	KV2001							20p	4.0	18-22Ø	22	300	50M				DO7
55▼	KV2002							20p	4.0	18-22Ø	15	300	50M				DO7
56▼	KV2003							20p	4 0	18-22Ø	15	250	50M				DO7
57	MV20,A⊘							20p	4.0	±4 0,±2.0Ø	20	7.0	50M		250m	Si	A109
58	MV20E,EA	350M						20p	4 0	±4.0,±2.0Ø	70	7.0	50M		250m	Si	A109
59	MV1632							20p§	4.0	18 - 22Ø	20 ⊘	250	.05G		40	Si$	DO7
60	MV1732							20p§	4 0	18 - 22Ø	30 ⊘	400	.05G		40	Si$	DO7
61	SQ1232A,B,C							20p§%	4 0		30 ⊘	800	50M		250m	Si#$	A1ah
62	SQ1282A,B,C							20p§%	4.0		30 ⊘	400	50M		250m	Si#$	A1ah
63	SQ1732,B,C							20p§%	4 0	18-22Ø	30 ⊘	800	50M		500m	Si#$	DO7
64	SQ5447A							20p%	4 0		30 ⊘	350	50M		400m		DO7
65	SQ5447B							20p%	4.0		30 ⊘	350	50M		400m		DO7
66	SQ5447C							20p%	4 0		30 ⊘	350	50M		400m		DO7
67	SQ5467A							20p%	4 0		30 ⊘	500	50M		400m		DO7
68	SQ5467B							20p%	4 0		30 ⊘	500	50M		400m		DO7
69	SQ5467C							20p%	4.0		30 ⊘	500	50M		400m		DO7
70	V20⊘,A⊘,B⊘							20p	4.0	±4,2,1Ø	20	7.0	05G		50	Si*	DO14
71	V20%,A%,B%,C,D							20p%	4 0	8 3-50	25 $	15	50M		500m		A1st
72	V20E△,EA△,EB△,EC,ED																
								20p%	4.0	5.0-50	90 $	7.0	50M		500m	Si$	DO14
73	V20E⊘,EA⊘,EB⊘							20p%	4.0	±4.2;1.0Ø	90	7.0	50M		500m	Si*	DO14
74	V20EG							20p	4.0	50 - 5.0	70	10	.05G		40	Si$	DO7
75	V20G							20p	4.0	50 - 10	20	10	.05G		.40	Si$	DO7
76	V920△,A△,B△,C△,D△							20p%	4.0	8 3 - 50	25 $	15	05G		.50	Si$	DO14
77	V920⊘,A⊘,B⊘							20p	4.0	±4,2,1Ø	20	15	.05G		.50	Si*	DO14
78	V920%,A%,B%,C%,D%							20p%	4.0	8 3-50	25 $	15	50M		500m		A1st
79	V920E△,EA△,EB△,EC,ED																
								20p%	4 0	5.0-50	90 $	7.0	50M		500m	Si$	DO14
80	V920E⊘,EA⊘,EB⊘							20p%	4.0	±4.0,2 0,1 0Ø	90	15	5.0M		500m	Si*	DO14
81	VC20△,A,B							20p%	4.0	6.5-50	50 $	10	50M				DO7
82	VC220,A,B							20p%	4.0	6.5 - 50	50 $	25	.05G				DO7
83	VC825,A,B							20p%	4.0	10 - 50	20 $	7 0	.05G				DO7
84	VC845,A,B							20p%	4.0	5.0 - 50	70 $	7 0	.05G				DO7
85	VH20							20p△	4.0	50 - 10	20 $	7.0	.05G		.50	Si$	DO14
86	VH20E							20p△	4.0	50 - 5 5	70 $	7.0	.05G		.50	Si$	DO14
87	VH920							20p△	4.0	50 - 10	20 $	7 0	.05G		.50	Si$	DO14
88	VH920E							20p△	4.0	50 - 5.0	70 $	7.0	.05G		50	Si$	DO14
89	VH7082							20p△	4 0	50 - 10	20 $	10	05G		50	Si$	DO14
90	VH7127							20p△	4.0	50 - 5 0	70 $	10	.05G		50	Si$	DO14
91	VVC209,A,B,C,D							20p%	4.0		20	7 0	50M			Si	DO7
92	VVC210,A,B,C,D							20p%	4.0		70	7.0	50M			Si	DO7
93	VVC708,A,B,C,D							20p%	4 0		20	15	50M			Si	DO7
94	VVC709,A,B,C,D							20p%	4 0		90	15	50M			Si	DO7
95	VVC739,A,B,C,D							20p%	4 0		20	250	50M			Si	DO7
96	VVC740,A,B,C,D							20p%	4.0		30	400	50M			Si	DO7
97	VVC922,A,B,C,D							20p%	4 0		20	10	50M			Si	DO7
98	VVC923,A,B,C,D							20p%	4.0		70	10	50M			Si	DO7
99	VVC958,A,B,C,D							20p%	4 0		90	7.0	50M			Si	DO7
100	VVC1008,A,B,C,D							20p%	4.0		30	400	50M			Si	DO7
101	1N4388							20p⊘	6 0		100 ⊘	200	50M	2.0	10	Si	DO4
102	MA4961A,B							20p⊘	6 0	10 - 20Ø	120 ⊘			50	15	Si	Z48
103#	1S352							20p	10		35	60	25M			Si*	A1ce
104#	1S352M							20p	10		35	60	25M			Si*	A1ce
105#	1S352N							20p	10		60	140	25M			Si*	A1ce
106▼#	1S893							20p	10	43-17 5Ø	20	160	20M			Si	A185e
107▼#	1S1894A							20p	10	66 5-20Ø	30	250	50M			Si	A1tr
108▼#	1S1894B							20p	10	66 5-20Ø	30	250	50M			Si	A1tr

SYMBOLS AND CODES EXPLAINED IN INTERPRETER

10 VOLTAGE VARIABLE CAPACITORS & VARACTOR DIODES

IN ORDER OF (1) TYPICAL CAPACITANCE, (2) TEST VOLTAGE, and (3) TYPE No.

LINE No	3 TYPE No.	MINIMUM CUTOFF FREQUENCY (Corresponding to Type Numbers in previous column) (Hz)	(Hz)	(Hz)	(Hz)	(Hz)	(Hz)	TYP. CAP. 1 CAP. Cj (F)	2 at TEST VOLT (V)	CAPACITANCE RANGE (for V = 0 to PIV) Ø - at TEST VOLT (pF)	PIV (V)	Q FACTOR MIN. Q	at TEST FREQ (Hz)	MAX. SER RES. Rs (Ω)	MAX. DISS. @ 25°C (W)	DESCRIPTION MAT.	DWG No.
1▼#	1S1894C							20p	10	66 5-20Ø	30	250	50M			Si	A1tr
2▼#	1S1894D							20p	10	66.5-20Ø	30	250	50M			Si	A1tr
3▼#	1S1895A							20p	10	66 5-20Ø	20	250	50M			Si	A1tr
4▼#	1S1895B							20p	10	66.5-20Ø	20	250	50M			Si	A1tr
5▼#	1S1895C							20p	10	66 5-20Ø	20	250	50M			Si	A1tr
6▼#	1S1895D							20p	10	66 5-20Ø	20	250	50M			Si	A1tr
7	SD11F24							21p	0.0	21 - 42	24			1 0		Si	P3
8	SD12F24							21p	0.0	21 - 42	24			1 0		Si	F3a
9	SD22F24							21p	0 0	21 - 42	24			1 0		Si	F11
10	SD32F24							21p	0.0	21 - 42	24			1 0		Si	F21
11	SD42F24							21p	0 0	21 - 42	24			1 0		Si	F9a
12	SDGPF24							21p	0 0	21 - 42	24			1 0		Si	DO7
13	1N3552							21p	4 0	20-22Ø	22	25	50M		150m⊘		DO7
14	1N3627							21p	4 0	10 - 50	20	25	50M			Si	DO7
15	VVC815,A,B,C,D							21p%	4 0		25	50	50M			Si	DO7
16#	MA332B	1 0G						21p	10	15 - 25Ø	35	40	25M			Si△	A138b
17	G522,A,B							22p%			25	500 Ø	50M		500m	Si$	A60j
18	G030022-1R							22p		3 5;1.0 - 30V$	30	170 Ø	50M			Si	DO7
19	G030022-2R							22p		3.5;1.0 - 30V$	30	260 Ø	50M			Si	DO7
20	G030022-3R							22p		3 5;1 0 - 30V$	30	400 Ø	50M			Si	DO7
21	G060022-1R							22p		5 2;1 0 - 60V$	60	170 Ø	50M			Si	DO7
22	G060022-2R							22p		5.2;1 0 - 60V$	60	270 Ø	50M			Si	DO7
23	G060022-3R							22p		5.2,1 0 - 60V$	60	400 Ø	50M			Si	DO7
24	VAT15N16,N18,N20							22pt△	0 0	20 - 23 9Ø	120	475	50M				Z42
25	VAT55N16,N18,N20							22pt△	0 0	20 - 23 9Ø	60	900	50M				Z42
26	VAT75N16,N18,N20							22pt△	0 0	20 - 23 9Ø	45	1400	50M				Z42
27	1N4598							22p	4 0	118 - 26Ø	90	50	05G		25		DO7
28	1N4598A							22p	4.0		90	15	50M			Si	DO7
29	1N4609							22p	4 0	12 5 - 33Ø	35	60	.05G		25	Si	DO7
30	1N4609A							22p	4.0		35	60	50M			Si	DO7
31	1N4792,A,B,C,D							22p%	4 0	2 46,0-4 0V$	20 $	15	50M		500m	Si	DO14
32	1N4807,A,B,C,D							22p%	4 0	2.46;0-4 0V$	90 $	15	50M		500m	Si	DO14
33	JAN1N4807A,B							22p%	4 0	2.46; .10 - 40V$	90 $	15	50M		500m	Si	A1dd
34	1N5144,A							22p%△	4 0	3.2;4 0 - 60V$	60 ⊘	200	50M		400m	Si	DO7
35	JAN1N5144A							22p	4.0	20 9 - 23 1Ø		200	50m		40	Si	DO7
36	1N5448							22p%	4 0	2 6;2V-30V$	30	350	50M		400m	Si	DO7
37	1N5448A							22p%	4 0	2.6;2V-30V$	30	350	50M		400m	Si	DO7
38	1N5448B							22p%	4 0	2.6;2V-30V$	30	350	50M		400m	Si	DO7
39	1N5448C							22p%	4 0	2.6;2V-30V$	30	350	50M		400m	Si	DO7
40	1N5448D							22p%	4 0	2 6,2V-30V$	30	350	50M		400m	Si	DO7
41	1N5468							22p%	4 0	2 9,2V-30V$	30	500	50M		400m	Si	DO7
42	1N5468A							22p%	4.0	2.9;2V-30V$	30	500	50M		400m	Si	DO7
43	1N5468B							22p%	4 0	2 9;2V-30V$	30	500	50M		400m	Si	DO7
44▼	JAN1N5468B							22p	4 0	20.9-23 1Ø	30 ⊘	500	50M		400m	Si	DO7
45	1N5468C							22p%	4 0	2.9;2V-30V$	30	500	50M		400m	Si	DO7
46	1N5468D							22p%	4.0	2.9;2V-30V$	30	500	50M		400m	Si	DO7
47	1N5687,A,B							22p%	4 0	3.85;2.0V-40V$	40 $	500	50M		400m	*	DO7
48	1N5702,A,B							22p%	4 0	3.55,4.0V-60V$	60 $	375	50M		400m	*	DO7
49#	BBY20							22pt	4.0	8.2;2 0V-100V$	100	100	50M		500m	Si	DO7
50	CV1873B							22p	4 0	19.80-24 20	60	175	100M		5 0	Si	F27x⊘
51	CV1873D							22p	4 0	19.80-24 20	60	175	100M		5 0	Si	F56n⊘
52▼	CV5022							22p	4 0	2 5;2 0V-30V$	30	350	50M		400m	Si	DO7
53	D1734,B,C							22pt%	4 0	19 8-24 2Ø	30 ⊘	400	50M		400m	Si#$	A1st
54	D6909							22p	4.0	3.2;2-30V$	30	500	50M		.40	Si$	DO7
55#	DC4216							22p	4 0		60					Si	M524
56#	DC4221							22p	4.0		60	400	10M			Si	C16f
57	E722							22p	4 0		60	800	50M			Si	
58	FV1112,A,B,C,D							22p%	4 0	6.2$	110 ⊘	150	50M		400m	Si#	A1ce
59	G122,A,B							22p%	4 0		25	100 Ø	50M		500m	Si$	A60j
60	G222,A,B							22p%	4 0		25	200 Ø	50M		500m	Si$	A60j
61	G322,A,B							22p%	4 0		25	300 Ø	50M		500m	Si$	A60j
62	G422,A,B							22p%	4.0		25	400 Ø	50M		500m	Si$	A60j
63	GC1717	42G						22p§	4 0	7 0;0 0V-60V$	60 ⊘	850	50M				F27w
64	GC1767							22p	4 0	6 5-58	60	800	50M		400m	Si	DO7
65	IC522-30,A,B,C							22p%	4 0	42.000-9 500	50	300	50M		500m	Si	M214a
66	IC1022-30,A,B,C							22p%	4 0	42.000-6.500	100	300	50M		500m	Si	M214a
67	KV113,A,B,C,D							22p%	4 0	6 2-55	80	50	50M		400m	Si	DO14
68	KV116,A,B,C,D							22p%	4.0	5 6-55	100	100	50M		400m	Si	DO14
69	KV133							22p	4.0	10-55	25	50	50M		400m	Si	DO14
70	KV136							22p	4 0	7 5-55	50	125	50M		400m	Si	DO14
71	KV153							22p	4 0	6 2-55	80	100	50M		400m	Si	DO14
72	KV159							22p	4 0	10-55	25	150	50M		400m	Si	DO14
73	KV166							22p	4 0	5.6-55	100	75	50M		400m	Si	DO14
74	KV206							22p	4 0	4.7-55	150	75	50M		400m	Si	DO14
75	KV207							22p	4 0	4 7-55	150	100	50M		400m	Si	DO14
76	KV306							22p	4 0	6.5,2 0V-200V$	200	75	50M		400m	Si	DO14
77	KV307							22p	4 0	6.5,2.0V-200V$	200	100	50M		400m	Si	DO14
78	MA4019E							22p	4 0	5 2$	110 ⊘	100	50M			Si$#	A31e
79	MA4273E							22p	4 0	17.6 - 26.4Ø	110	100	.05G		50	Si	A31e
80	MA45017							22pt	4 0	4.0;2 0 - 60V$	75 ⊘	100	50G		350m	Si$	A31e
81	MA45039							22pt	4.0	2 7;2.0 - 30V$	35 ⊘	300	50G		400m	Si$	A31e
82	MC22△							22p	4.0		60 †	10	50M			Si	A1au
83	MC103,A,B							22p%	4 0	5.2;2 0 - 100V$	110 ⊘	150	50M		500m	Si$#	A1ce
84	MC109,A,B							22p%	4.0	4 0,2 0 - 75V$	85 ⊘	150	50M		500m	Si$#	A1ce
85	MC115,A,B							22p%	4 0	3 0;2.0 - 40V$	50 ⊘	150	50M		500m	Si$#	A1ce
86	MC422							22p	4 0		60 †	100	50M			Si	A1au
87	MV832							22p§	4.0	19 8 - 24.2Ø	30 ⊘	25	50M		400m	Si	DO7
88	MV1634							22p§	4 0	19.8 - 24.2Ø	20 ⊘	250	.05G		.40	Si$	DO7
89	MV1734							22p§	4 0	19.8 - 24.2Ø	30 ⊘	400	.05G		.40	Si$	DO7
90	MV1734A							22p	4.0		30 ⊘	400	50M		400m	Si△#	DO7
91	MV1872	45G						22p	4 0	19.8 - 24.2Ø	75 ⊘	200	.05G	82	.40	Si	A1cy
92	MV2107							22p§	4.0	19.8-24.2Ø	30	350	50M		280m	Si	C103
93#	MV6113							22p	4 0	17 6-26.4Ø	50	50	50M		200m	Si*	DO7
94#	MVB6116							22p	4 0	17 6-26.4Ø	100 ⊘	100	50M		12	Si*	S19k
95	PC113,A,B							22p%	4 0	7 5; .50 - 80V$	80 $	50	50M			Si*	DO14△
96	PC116,A,B							22p%	4 0	8 2; .50 - 100V$	100 $	100	50M			Si*	DO14△
97	PC133,A,B							22p%	4 0	4 6; .50 - 30V$	30 $	50	50M			Si*	DO14△
98	PC136,A,B							22p%	4 0	6.0; .50 - 50V$	50 $	125	50M			Si*	DO14△
99	PC502							22p△	4.0	2 4, 10 - 4.0V$	100 $	175	50M		500m	Si*	DO14
100	PC503							22p△	4 0	2 4, 10 - 4.0V$	75 $	175	50M		500m	Si*	DO14
101	PC504							22p△	4.0	2 4, 10 - 4.0V$	50 $	175	50M		500m	Si*	DO14
102	PC505							22p△	4 0	2.4;.10V-4V$	30 $	175	.05G		50	Si*	DO14
103	PC507							22p△	4 0	2 4, 10 - 4.0V$	125 $	150	50M		500m	Si*	DO14
104	PC508							22p△	4.0	2 4, 10 - 4 0V$	100 $	150	50M		500m	Si*	DO14
105	PC509							22p△	4.0	2.4; .10 - 4.0V$	75 $	150	50M		500m	Si*	DO14
106	PC510							22p△	4.0	2 4; 10 - 4.0V$	50 $	150	50M		500m	Si*	DO14
107	PC511							22p△	4.0	2.4, 10V-4V$	30 $	150	.05G		.50	Si*	DO14
108	PC512							22p△	4 0	2 4; .10 - 4.0V$	150 $	125	50M		500m	Si*	DO14
109	PC513							22p△	4.0	2 4; .10 - 4.0V$	125 $	125	50M		500m	Si*	DO14
110	PC514							22p△	4.0	2.4; 10 - 4.0V$	100 $	125	50M		500m	Si*	DO14

SYMBOLS AND CODES EXPLAINED IN INTERPRETER

10 VOLTAGE VARIABLE CAPACITORS & VARACTOR DIODES

IN ORDER OF (1) TYPICAL CAPACITANCE, (2) TEST VOLTAGE, and (3) TYPE No.

LINE No.	3 TYPE No.	MINIMUM CUTOFF FREQUENCY (Corresponding to Type Numbers in previous column) (Hz)	(Hz)	(Hz)	(Hz)	(Hz)	(Hz)	TYP. CAP. 1 CAP. Cj (F)	2 at TEST VOLT (V)	CAPACITANCE RANGE (for V = 0 to PIV) Ø - at TEST VOLT. (pF)	PIV (V)	Q FACTOR MIN Q	at TEST FREQ (Hz)	MAX. SER. RES. Rs (Ω)	MAX. DISS. @ 25°C (W)	DESCRIPTION MAT.	DWG. No.
1	PC515							22pΔ	4 0	2 4; 10 - 4 0V$	75 $	125	50M		500m	Si*	DO14
2	PC516							22pΔ	4.0	2 4, 10 - 4 0V$	50 $	125	50M		500m	Si*	DO14
3	PC517							22pΔ	4.0	2.4;.10V-4V$	30 $	125	05G		.50	Si*	DO14
4	PC518							22pΔ	4.0	2.4; .10 - 4.0V$	150 $	100	50M		500m	Si*	DO14
5	PC519							22pΔ	4.0	2.4; 10 - 4.0V$	125 $	100	50M		500m	Si*	DO14
6	PC520							22pΔ	4.0	2.4; .10 - 4 0V$	100 $	100	50M		500m	Si*	DO14
7	PC521							22pΔ	4.0	2.4; .10 - 4.0V$	75 $	100	50M		500m	Si*	DO14
8	PC522							22pΔ	4.0	2.4; .10 - 4.0V$	50 $	100	50M		500m	Si*	DO14
9	PC523							22pΔ	4 0	2 4;.10V-4V$	30 $	100	.05G		50	Si*	DO14
10	PC524							22pΔ	4 0	2 4, 10 - 4 0V$	150 $	75	50M		500m	Si*	DO14
11	PC525							22pΔ	4.0	2.4; .10 - 4.0V$	125 $	75	50M		500m	Si*	DO14
12	PC526							22pΔ	4 0	2 4; 10 - 4.0V$	100 $	75	50M		500m	Si*	DO14
13	PC527							22pΔ	4 0	2 4; .10 - 4 0V$	75 $	75	50M		500m	Si*	DO14
14	PC528							22pΔ	4 0	2.4, .10 - 4.0V$	50 $	75	50M		500m	Si*	DO14
15	PC529							22pΔ	4 0	2 4;.10V-4V$	30 $	75	05G		.50	Si*	DO14
16	PC530							22pΔ	4.0	2.4; 10 - 4 0V$	150 $	50	50M		500m	Si*	DO14
17	PC531							22pΔ	4.0	2.4, 10 - 4 0V$	125 $	50	50M		500m	Si*	DO14
18	PC532							22pΔ	4.0	2 4; .10 - 4.0V$	100 $	50	50M		500m	Si*	DO14
19	PC533							22pΔ	4.0	2 4; .10 - 4 0V$	75 $	50	50M		500m	Si*	DO14
20	PC534							22pΔ	4.0	2 4, 10 - 4.0V$	50 $	50	50M		500m	Si*	DO14
21	PC535							22pΔ	4.0	2.4;.10V-4V$	30 $	50	.05G		50	Si*	DO14
22	PC0603A							22p§Δ	4 0		30 $	200	50M				DO7
23	PC0603B							22p§Δ	4.0		30 $	300	50M				DO7
24	PC0603C							22p§Δ	4.0		30 $	400	50M				DO7
25	PC0613A							22p§Δ	4.0		60 $	200	50M				DO7
26	PC0613B							22p§Δ	4.0		60 $	300	50M				DO7
27	PC0613C							22p§Δ	4.0		60 $	400	50M				DO7
28	PC0623A							22p§Δ	4.0		90 $	200	50M				DO7
29	PC0623B							22p§Δ	4.0		90 $	300	50M				DO7
30	PC0633A							22p§Δ	4.0		120 $	200	50M				DO7
31	PC0643A							22p§Δ	4.0		150 $	200	50M				DO7
32	PC1403A							22p§Δ	4.0		30 $	200	50M				A2u
33	PC1403B							22p§Δ	4.0		30 $	300	50M				A2u
34	PC1403C							22p§Δ	4 0		30 $	400	50M				A2u
35	PC1413A							22p§Δ	4 0		60 $	200	50M				A2u
36	PC1413B							22p§Δ	4.0		60 $	300	50M				A2u
37	PC1413C							22p§Δ	4.0		60 $	400	50M				A2u
38	PC1423A							22p§Δ	4.0		90 $	200	50M				A2u
39	PC1423B							22p§Δ	4.0		90 $	300	50M				A2u
40	PC1433A							22p§Δ	4.0		120 $	200	50M				A2u
41	PC1443A							22p§Δ	4.0		150 $	200	50M				A2u
42	PC2603A							22p§Δ	4.0		30 $	200	50M				DO7
43	PC2603B							22p§Δ	4.0		30 $	300	50M				DO7
44	PC2603C							22p§Δ	4 0		30 $	400	50M				DO7
45	PC2613A							22p§Δ	4 0		60 $	200	50M				DO7
46	PC2613B							22p§Δ	4.0		60 $	300	50M				DO7
47	PC2613C							22p§Δ	4 0		90 $	400	50M				DO7
48	PC2623A							22p§Δ	4 0		90 $	200	50M				DO7
49	PC2623B							22p§Δ	4.0		90 $	300	50M				DO7
50	PC2623C							22p§Δ	4 0		90 $	400	50M				DO7
51	PC2633A							22p§Δ	4 0		120 $	200	50M				DO7
52	PC2633B							22p§Δ	4 0		120 $	300	50M				DO7
53	PC2633C							22p§Δ	4 0		120 $	400	50M				DO7
54	PC2643A							22p§Δ	4.0		150 $	200	50M				DO7
55	PC2643B							22p§Δ	4 0		150 $	300	50M				DO7
56▼	PG122,A,B							22p%	4.0	4.4;2 0V-65V$	65 $	200	50M				DO7
57▼	PG222,A,B							22p%	4.0	3 9;2.0V-65V$	65 $	200	50M				DO7
58▼	PG322,A,B							22p%	4.0	4 6;2.0V-50V$	50 $	300	50M				DO7
59	PV003,A,B							22p%	4.0		100	100	50M		10		DO4
60	PV006,A,B							22p%	4.0		100	150	50M		10		DO4
61	PV009,A,B							22p%	4 0		150	100	50M		10		DO4
62	PV1433							22p§	4.0		120	400	500M				A2u
63	PVM4220,A,B							22p%	4.0	7.65;0.0V-40V$	40 $	60	1.0G		2 0	*	F56j
64	PVM6220,A,B							22p%	4.0	9.25;0.0V-60V$	60	40	1 0G		2.0	*	F56j
65	SQ1234A,B,C							22p§%	4 0		30 ☑	800	50M		250m	Si#$	A1ah
66	SQ1284A,B,C							22p§%	4 0		30 ☑	400	50M		250m	Si#$	A1ah
67	SQ1734,B,C							22p§%	4 0	19 8-24.2Ø	30 ☑	800	50M		500m	Si#$	DO7
68	SQ5448A							22p%	4 0		30 ☑	350	50M		400m		DO7
69	SQ5448B							22p%	4.0		30 ☑	350	50M		400m		DO7
70	SQ5448C							22p%	4.0		30 ☑	350	50M		400m		DO7
71	SQ5468A							22p%	4 0		30 ☑	500	50M		400m		DO7
72	SQ5468B							22p%	4 0		30 ☑	500	50M		400m		DO7
73	SQ5468C							22p%	4.0		30 ☑	500	50M		400m		DO7
74#	SV77F							22p	4 0	16 - 18Ø	90			2 5	5.0	Si$	
75	VA113							22p	4 0	55 - 6.2	80	50	.05G		.50	Si$	A131
76	VA116							22p	4.0	55 - 5.6	100	100	05G		.50	Si$	A131
77	VA133							22p	4 0	55 - 10	25	50	05G		50	Si$	A131
78	VA136							22p	4 0	55 - 7.5	50	125	.05G		.50	Si$	A131
79	VA153							22p	4 0	55 - 6 2	80	100	.05G		.50	Si$	A131
80	VA159							22p	4 0	55 - 10	25	150	.05G		50	Si$	A131
81	VA166							22p	4.0	55 - 5.6	100	75	05G		.50	Si$	A131
82	VA206	37G						22p	4 0	55 - 4 7	150	75	.05G	1 4	50	Si$	A131
83	VA207	50G						22p	4.0	55 - 4 7	150	100	.05G	1 1	.50	Si$	A131
84	VA306							22p	4.0	6.5;2.0 - 200V$	200	75	50M		500m	Si$	DO14Δ
85	VA307							22p	4 0	6 5;2.0 - 200V$	200	100	50M		500m	Si$	DO14Δ
86	VC321,A,B							22p%	4.0	3 0;1V-25V$	25 $	50	05G				DO7
87	VC322,A,B							22p%	4.0	4.0;2V-80V$	80 $	50	05G				DO7
88	VC421,A,B							22p%	4.0	3.0;1V-25V$	25 $	100	05G				DO7
89	VC422,A,B							22p%	4 0	4 0;1V-50V$	50 $	100	05G				DO7
90	VC423,A,B							22p%	4 0	4.0;2.0 - 80V$	100 $	100	50M				DO7
91	VC622,A,B							22p%	4 0	3.0;1V-25V$	40 $	200	05G				DO7
92	VC623,A,B							22p%	4.0	3 0;1V-25V$	40 $	300	05G				DO7
93	VG122,A,B,C,D							22p%	4.0	4.55;2.0 - 65V$	70	200	50M		400m	Si$	DO7
94	VG222,A,B,C,D							22p%	4.0	4.45;2.0 - 65V$	70	200	50M		400m	Si$	DO7
95	VG322,A,B,C,D							22p%	4 0	3 95,2 0 - 50V$	55	300	50M		400m	Si$	DO7
96	VH113	20GØ						22pΔ	4.0	4 0$	80 $	50	50M	2 9	500m	Si$	DO14
97	VH116	40GØ						22pΔ	4.0	5.2$	100 $	100	50M	1 5	500m	Si$	DO14
98	VH133	10GØ						22pΔ	4.0	3.5$	25 $	50	50M	2 9	500m	Si$	DO14
99	VH136	30GØ						22pΔ	4 0	4 0$	50 $	125	50M	1 2	500m	Si$	DO14
100	VH163	30GØ						22pΔ	4 0	5 2$	100 $	75	50M	1 9	500m	Si$	DO14
101	VH170	40GØ						22pΔ	4 0	4 0$	80 $	100	50M	1 5	500m	Si$	DO14
102	VH178	20GØ						22pΔ	4.0	4 0$	50 $	75	50M	1 9	500m	Si$	DO14
103	VH186	30GØ						22pΔ	4 0	3 5$	25 $	150	50M	.90	500m	Si$	DO14
104	VH206	50GØ						22pΔ	4 0	6 2$	150 $	100	50M	1 5	500m	Si$	DO14
105	VH207	35GØ						22pΔ	4 0	6 2$	150 $	60	50M	2 4	500m	Si$	DO14
106	VH228	40GØ						22pΔ	4 0	6 7$	200 $	50	50M	2 9	500m	Si$	DO14
107	VM502,A,B,C,D							22p%	4 0	4 4,4.0 - 100V$	110	175			500m	Si$	DO14
108	VM503,A,B,C,D							22p%	4 0	3 5,4 0 - 75V$	83	175			500m	Si$	DO14
109	VM504,A,B,C,D							22p%	4 0	2 9,4 0 - 50V$	55	175			500m	Si$	DO14
110	VM505,A,B,C,D							22p%	4 0	2 3,4 0 - 30V$	33	175			500m	Si$	DO14

SYMBOLS AND CODES EXPLAINED IN INTERPRETER

10 VOLTAGE VARIABLE CAPACITORS & VARACTOR DIODES

IN ORDER OF (1) TYPICAL CAPACITANCE, (2) TEST VOLTAGE, and (3) TYPE No.

LINE No.	3 TYPE No	MINIMUM CUTOFF FREQUENCY (Corresponding to Type Numbers in previous column) (Hz)	(Hz)	(Hz)	(Hz)	(Hz)	(Hz)	1 TYP CAP. Cj (F)	2 at TEST VOLT (V)	CAPACITANCE RANGE (for V = 0 to PIV) Ø - at TEST VOLT. (pF)	PIV (V)	Q FACTOR MIN. Q	at TEST FREQ (Hz)	MAX. SER. RES Rs (Ω)	MAX. DISS. @ 25°C (W)	DESCRIPTION MAT.	DWG. No.
1	VM506,A,B,C,D							22p%	4 0	5 0,4 0 - 150V$	165	150			500m	Si$	DO14
2	VM507,A,B,C,D							22p%	4.0	4 8;4.0 - 125V$	138	150			500m	Si$	DO14
3	VM508,A,B,C,D							22p%	4.0	4.4;4 0-100V$	110	150			500m	Si$	DO14
4	VM509,A,B,C,D							22p%	4 0	3 5,4.0 - 75V$	83	150			500m	Si$	DO14
5	VM510,A,B,C,D							22p%	4.0	2 9;4 0 - 50V$	55	150			500m	Si$	DO14
6	VM511,A,B,C,D							22p%	4 0	2 3,4.0 - 30V$	33	150			500m	Si$	DO14
7	VM512,A,B,C,D							22p%	4 0	5 0,4 0 - 150V$	165	125			500m	Si$	DO14
8	VM513,A,B,C,D							22p%	4 0	4 8,4.0 - 125V$	138	125			500m	Si$	DO14
9	VM514,A,B,C,D							22p%	4 0	4 4,4.0 - 100V$	110	125			500m	Si$	DO14
10	VM515,A,B,C,D							22p%	4 0	3 5,4.0 - 75V$	83	125			400m	Si$	DO14
11	VM516,A,B,C,D							22p%	4 0	2 9;4.0 - 50V$	55	125			400m	Si$	DO14
12	VM517,A,B,C,D							22p%	4 0	2 3;4.0 - 30V$	33	125			400m	Si$	DO14
13	VM518,A,B,C,D							22p%	4 0	5 0,4 0 - 150V$	165	100			400m	Si$	DO14
14	VM519,A,B,C,D							22p%	4 0	4 8,4.0 - 125V$	138	100			400m	Si$	DO14
15	VM520,A,B,C,D							22p%	4 0	4 4;4.0 - 100V$	110	100			400m	Si$	DO14
16	VM521,A,B,C,D							22p%	4 0	3 5;4.0 - 75V$	83	100			400m	Si$	DO14
17	VM522,A,B,C,D							22p%	4 0	2 9;4 0 - 50V$	55	100			400m	Si$	DO14
18	VM523,A,B,C,D							22p%	4 0	2 3;4.0 - 30V$	33	100			400m	Si$	DO14
19	VM524,A,B,C,D							22p%	4 0	5 0;4 0 - 150V$	165	75			400m	Si$	DO14
20	VM525,A,B,C,D							22p%	4 0	4 8;4.0 - 125V$	138	75			400m	Si$	DO14
21	VM526,A,B,C,D							22p%	4 0	4 4;4.0 - 100V$	110	75			400m	Si$	DO14
22	VM527,A,B,C,D							22p%	4 0	3 5;4.0 - 75V$	83	75			500m	Si$	DO14
23	VM528,A,B,C,D							22p%	4 0	2 9;4.0 - 50V$	55	75			500m	Si$	DO14
24	VM529,A,B,C,D							22p%	4 0	2 3;4.0 - 30V$	33	75			500m	Si$	DO14
25	VM530,A,B,C,D							22p%	4 0	5 0;4 0 - 150V$	165	50			500m	Si$	DO14
26	VM531,A,B,C,D							22p%	4 0	4 8,4.0 - 125V$	138	50			500m	Si$	DO14
27	VM532,A,B,C,D							22p%	4 0	4 4,4.0 - 100V$	110	50			500m	Si$	DO14
28	VM533,A,B,C,D							22p%	4.0	3 5,4.0 - 75V$	83	50			500m	Si$	DO14
29	VM534,A,B,C,D							22p%	4 0	2 9;4 0 - 50V$	55	50			500m	Si$	DO14
30	VM535,A,B,C,D							22p%	4 0	2 3;4.0 - 30V$	33	50			500m	Si$	DO14
31	VVC402,A,B,C,D							22p%	4 0	±4 4Ø	80	50	05G			Si	DO7
32	VVC404,A,B,C,D							22p%	4 0	±4.4Ø	100	100	05G			Si	DO7
33	VVC413,A,B,C,D							22p%	4 0	±4 4Ø	25	50	05G			Si	DO7
34	VVC415,A,B,C,D							22p%	4 0	±4 4Ø	50	125	05G			Si	DO7
35	VVC710,A,B,C,D							22p%	4 0		30	50	50M			Si	DO7
36	VVC741,A,B,C,D							22p%	4 0		30	25	50M			Si	DO7
37	VVC742,A,B,C,D							22p%	4 0		30	400	50M			Si	DO7
38	VVC743,A,B,C,D							22p%	4 0		20	250	50M			Si	DO7
39	VVC816,A,B,C,D							22p%	4 0		60	10	50M			Si	DO7
40	VVC817,A,B,C,D							22p%	4 0		60	100	50M			Si	DO7
41	VVC862,A,B,C,D							22p%	4 0		30	100	50M			Si	DO7
42	VVC863,A,B,C,D							22p%	4 0		40	200	50M			Si	DO7
43	VVC864,A,B,C,D							22p%	4 0		40	300	50M			Si	DO7
44	VVC865,A,B,C,D							22p%	4.0		60	100	50M			Si	DO7
45	VVC866,A,B,C,D							22p%	4 0		110	100	50M			Si	DO7
46	VVC924,A,B,C,D							22p%	4 0		25	150	50M			Si	DO7
47	VVC925,A,B,C,D							22p%	4 0		50	75	50M			Si	DO7
48	VVC926,A,B,C,D							22p%	4 0		80	100	50M			Si	DO7
49	VVC927,A,B,C,D							22p%	4 0		100	75	50M			Si	DO7
50	VVC928,A,B,C,D							22p%	4 0		150	60	50M			Si	DO7
51	VVC929,A,B,C,D							22p%	4.0		150	100	50M			Si	DO7
52	VVC1009,A,B,C,D							22p%	4 0		40	300	50M			Si	DO7
53#	ZC706							22p†	4 0	3 2;2.0V-30V$	30	400	4 0		400m	Si	DO7
54	MA4290							22p	6 0		30			3 0		Si	F3a
55	MA4762							22p	6 0	15 - 30Ø	250			1 0	50	Si	S4g
56	MA4763							22p	6 0	15 - 30Ø	250			1 0		Si	F56k
57	VAB810AN25,26							22p△	6.0	18-26Ø	140			300m		Si	Z42
58	VAB810AN27,28							22p△	6 0	18-26Ø	140			300m		Si	Z42
59	JAN1N4387							23p	6 0	10 - 35Ø	150 ⊠				20	Si	DO4
60	SD11F6							24p	0 0	24 - 50	6.0			1 0		Si	P3
61	SD12F6							24p	0 0	24 - 50	6 0			1 0		Si	F3a
62	SD22F6							24p	0 0	24 - 50	6 0			1 0		Si	F11
63	SD32F6							24p	0 0	24 - 50	6 0			1 0		Si	F21
64	SD42F6							24p	0 0	24 - 50	6 0			1 0		Si	F9a
65	SDGPF6							24p	0 0	24 - 50	6 0			1 0		Si	DO7
66#	1S555							24p	6 0	20-27Ø	20	60	20M			Si△	A1dr
67	1N3557							24p	8 0		210	75	50M			Si	DO14
68#	BAY66	20G						25p	0 0	4.0 - 6 0	100				12	Si	S182
69	VAT16N16,N18,N20							25p†△	0 0	24 - 27 9Ø	120	450	50M				Z42
70	VAT56N16,N18,N20							25p†△	0.0	24 - 27 9Ø	60	900	50M				Z42
71	VAT76N16,N18,N20							25p†△	0 0	24 - 27 9Ø	45	1400	50M				Z42
72#	MV9251							25p	2	5 0;5.0-10V	30 ⊠	40	50M		200m	Si△	DO7
73#	1S1503							25p	4 0		15	150	50M			Si$	A1ce
74#	MV9252							25p	4	5.0;5.0-10V	30 ⊠	40	50M		200m	Si△	DO7
75	A713-3A,B,C,D	5.0G	10G	15G	20G			25p	6 0	20-30Ø	24				3 5	Si△$	F11
76	A713-4A,B,C	5 0G	10G	15G				25p†	6.0	20 - 30Ø	30				3 5	Si$△	F11
77	A713-5A,B,C	5.0G	10G	15G				25p†	6.0	20 - 30Ø	45				3 5	Si$△	F11
78	A713-6A,B	5 0G	10G					25p†	6 0	20 - 30Ø	60				3 5	Si$△	F11
79	A713-7A,B	5 0G	10G					25p†	6 0	20 - 30Ø	90				3 5	Si$△	F11
80	A713-8A	5 0G						25p†	6.0	20 - 30Ø	120				3 5	Si$△	F11
81	MA4063							25p	6 0	20 - 30Ø	60					Si	S4c
82	MA4064							25p	6 0	20 - 30Ø	90						S4c
83	MV1805C							25p§	6 0	20-30Ø	80 ⊠	500 Ø	50M		18	Si$△	F48a
84	PH1207-1,2,3,4		5 0G	10G	15G	20G		25p	6 0	20 - 30Ø	6 0	⊠	10G			Si$	F58
85	PH1207A,B	30G	40G					25p	6 0	20-3Ø	6 0	⊠	10G			Si$	F58
86	PH1217-1,2,3,4		5 0G	10G	15G	20G		25p	6 0	20 - 30Ø	15	⊠	10G			Si$	F58
87	PH1217A,B	30G	40G					25p	6 0	20-30Ø	15	⊠	10G			Si$	F58
88	PH1227-1,2,3,4		5 0G	10G	15G	20G		25p	6 0	20 - 30Ø	24	⊠	10G			Si$	F58
89	PH1227A	30G						25p	6 0	20-30Ø	24	⊠	10G			Si$	F58
90	PH1237-1,2	5.0G	10G					25p	6 0	20 - 30Ø	30	⊠	10G			Si$	F58
91	PH1247-1,2	5.0G	10G					25p	6 0	20 - 30Ø	45	⊠	10G			Si$	F58
92	PH1257-1,2	5.0G	10G					25p	6.0	20 - 30Ø	60	⊠	10G			Si$	F58
93	PH1267-1,2	5 0G	10G					25p	6.0	20 - 30Ø	90	⊠	10G			Si$	F58
94	PH1277-1,2	5 0G	10G					25p	6.0	20 - 30Ø	120	⊠	10G			Si$	F58
95	PH1287-1	5.0G						25p	6.0	20 - 30Ø	150	⊠	10G			Si$	F58
96	PH1297-1	5 0G						25p	6 0	20 - 30Ø	200	⊠	10G			Si$	F58
97	PL0107-1,2,3,4		5 0G	10G	15G	20G		25p	6.0	20 - 30Ø		⊠	10G			Si	F27d
98	PL0107A,B	30G	40G					25p	6 0	20-30Ø	6 0	⊠	10G			Si	F27d
99	PL0117-1,2,3,4		5.0G	10G	15G	20G		25p	6 0	20 - 30Ø		⊠	10G			Si	F27d
100	PL0117A,B	30G	40G					25p	6.0	20-30Ø	15	⊠	10G			Si	F27d
101	PL0127-1,2,3,4		5.0G	10G	15G	20G		25p	6 0	20 - 30Ø		⊠	10G			Si	F27d
102	PL0127A	30G						25p	6.0	20-30Ø	24	⊠	10G			Si	F27d
103	PL0137-1,2	5.0G	10G					25p	6.0	20 - 30Ø		⊠	10G			Si	F27d
104	PL0147-1,2	5.0G	10G					25p	6.0	20 - 30Ø		⊠	10G			Si	F27d
105	PL0157-1,2	5 0G	10G					25p	6 0	20 - 30Ø		⊠	10G			Si	F27d
106	PL0167-1,2	5.0G	10G					25p	6 0	20 - 30Ø		⊠	10G			Si	F27d
107	PL0177-1,2	5 0G	10G					25p	6.0	20 - 30Ø		⊠	10G			Si	F27d
108	PL0187-1	5.0G						25p	6.0	20 - 30Ø		⊠	10G			Si	F27d
109	VAB800N26,N27,N28							25p△	6 0	20 - 30Ø	200			35		Si	Z42
110	VAB810N26,N27,N28							25p△	6 0	20 - 30Ø	175			.35		Si	Z42

SYMBOLS AND CODES EXPLAINED IN INTERPRETER

10 VOLTAGE VARIABLE CAPACITORS & VARACTOR DIODES

IN ORDER OF (1) TYPICAL CAPACITANCE, (2) TEST VOLTAGE, and (3) TYPE No.

LINE No.	3 TYPE No	MINIMUM CUTOFF FREQUENCY (Corresponding to Type Numbers in previous column) (Hz)	(Hz)	(Hz)	(Hz)	(Hz)	(Hz)	TYP. CAP. 1 CAP. Cj (F)	2 at TEST VOLT (V)	CAPACITANCE RANGE (for V = 0 to PIV) Ø - at TEST VOLT. (pF)	PIV (V)	Q FACTOR MIN. Q	at TEST FREQ (Hz)	MAX. SER. RES. Rs (Ω)	MAX. DISS. @ 25°C (W)	DESCRIPTION MAT.	DWG. No.
1	SC2△							26p	4.0		22	35	50M				DO7
2	VVC818,A,B,C,D							26p%	4 0		50	10	50M			Si	DO7
3	VVC819,A,B,C,D							26p%	4.0		50	25	50M			Si	DO7
4	SD11F48							27p	0.0	27 - 54	48			1.0		Si	P3
5	SD12F48							27p	0.0	27 - 54	48			1.0		Si	F3a
6	SD22F48							27p	0.0	27 - 54	48			1.0		Si	F11
7	SD32F48							27p	0.0	27 - 54	48			1.0		Si	F21
8	SD42F48							27p	0.0	27 - 54	48			1.0		Si	F9a
9	SDGPF48							27p	0.0	27 - 54	48			1.0		Si	DO7
10	1N4793,A,B,C,D							27p%	4.0	2.46;0-4.0V$	20 $	15	50M		.50	Si	DO14
11	1N4808,A,B,C,D							27p%	4 0	2.46;0-4.0V$	65 $	15	50M		.50	Si	DO14
12	JAN1N4808A,B							27p%	4.0	2.46;10-40V$	65 $	15	50M		.50	Si	A1dd
13	1N5145,A							27p△%	4 0	3.2;4.0-60V$	60 ⊘	200	50M		.40	Si	DO7
14	JAN1N5145A							27p	4.0	25.7 - 28.3Ø		200	50m		.40	Si	DO7
15	1N5449							27p%	4.0	2.6;2V-30V$	30	350	50M		400m	Si	DO7
16	1N5449A							27p%	4 0	2.6;2V-30V$	30	350	50M		400m	Si	DO7
17	1N5449B							27p%	4.0	2.6;2V-30V$	30	350	50M		400m	Si	DO7
18	1N5449C							27p%	4.0	2.6;2V-30V$	30	350	50M		400m	Si	DO7
19	1N5449D							27p%	4.0	2.6;2V-30V$	30	350	50M		400m	Si	DO7
20	1N5469							27p%	4.0	2.9;2V-30V$	30	500	50M		400m	Si	DO7
21	1N5469A							27p%	4.0	2.9;2V-30V$	30	500	50M		400m	Si	DO7
22	1N5469B							27p%	4.0	2.9;2V-30V$	30	500	50M		400m	Si	DO7
23▼	JAN1N5469B							27p	4.0	25.65-28.35Ø	30 ⊘	500	50M		400m	Si	DO7
24	1N5469C							27p%	4.0	2.9;2V-30V$	30	500	50M		400m	Si	DO7
25	1N5469D							27p%	4 0	2.9;2V-30V$	30	500	50M		400m	Si	DO7
26	1N5688,A,B							27p%	4.0	3.90;2.0V-40V$	40 $	500	50M		400m	*	DO7
27	1N5703,A,B							27p%	4.0	3.55;4.0V-60V$	60 $	350	50M		400m	*	DO7
28▼	CV5027							27p	4.0	2.5;2.0V-30V$	30	300	50M		400m	Si	DO7
29	D1736,B,C							27p†%	4 0	24.3-29 7Ø	30 ⊘	400	50M		400m	Si#$	A1st
30	D6910							27p	4 0	3.2;2-30V$	30	500	50M		400m	Si$	DO7
31#	DC4217							27p	4 0		60					Si	M524
32#	DC4222							27p	4.0		60	400	10M			Si	C16f
33	G030027-1R							27p	4 0	3.5;1.0-30V$	30	100 Ø	50M			Si	DO7
34	G030027-2R							27p	4 0	3.5;1.0-30V$	30	200 Ø	50M			Si	DO7
35	G030027-3R							27p	4 0	3.5;1.0-30V$	30	300 Ø	50M			Si	DO7
36	G060027-1R							27p	4.0	5.2;1.0-60V$	60	100 Ø	50M			Si	DO7
37	G060027-2R							27p	4.0	5.2;1 0-60V$	60	200 Ø	50M			Si	DO7
38	G060027-3R							27p	4 0	5.2;1.0-60V$	60	300 Ø	50M			Si	DO7
39	GC1768							27p	4 0	8.2-62	60	600	50M		400m	Si	DO7
40	IC527-30,A,B,C							27p%	4.0	52.000-11.000	50	300	50M		500m	Si	M214a
41	IC1027-30,A,B,C							27p%	4.0	52.000-8 000	100	300	50M		500m	Si	M214a
42	MA45018							27p†	4 0	4 0;2.0-60V$	75 ⊘	100	50G		.35	Si$	A31e
43	MA45040							27p†	4 0	2.7;2.0-30V$	35 ⊘	250	50G		.40	Si$	A31e
44	MV27,A							27p	4.0	±5.4,±2.7Ø	20	7.0	.05G		.25	Si	A109
45	MV27E	35G						27p	4 0	±5.4,±2.7Ø	65	7.0	05G		25	Si	A109
46	MV833							27p$	4 0	24.3-29.7Ø	30 ⊘	25	50M		40	Si	DO7
47	MV1636							27p$	4.0	24.3 - 29 7Ø	20 ⊘	200	.05G		40	Si$	DO7
48	MV1736							27p$	4.0	24.3 - 29.7Ø	30 ⊘	400	.05G		40	Si$	DO7
49	MV1736A							27p	4 0		30 ⊘	400	50M		400m	Si△#	DO7
50	MV2108							27p$	4.0	24.3-29 7Ø	30	300	50M		280m	Si	C103
51	SQ1236A,B,C							27p$%	4.0		30 ⊘	800	50M		250m	Si#$	A1ah
52	SQ1286A,B,C							27p$%	4.0		30 ⊘	400	50M		250m	Si#$	A1ah
53	SQ1736,B,C							27p$%	4.0	24.3-29 7Ø	30 ⊘	800	50M		500m	Si#$	DO7
54	SQ5449A							27p%	4.0		30 ⊘	350	50M		400m		DO7
55	SQ5449B							27p%	4.0		30 ⊘	350	50M		400m		DO7
56	SQ5449C							27p%	4 0		30 ⊘	350	50M		400m		DO7
57	SQ5469A							27p%	4.0		30 ⊘	500	50M		400m		DO7
58	SQ5469B							27p%	4 0		30 ⊘	500	50M		400m		DO7
59	SQ5469C							27p%	4 0		30 ⊘	500	50M		400m		DO7
60	V27⊘,A⊘,B⊘							27p	4 0	±5 4,2.7,1.35Ø	20	7 0	50M		.50	Si*	DO14
61	V27%,A%,B%,C,D							27p%	4.0	11.7-70	25 $	15	50M		500m		A1st
62	V27E△,EA△,EB△,EC,ED							27p%	4 0	7.0-70	65 $	7 0	50M		500m	Si$	DO14
63	V27EG							27p	4.0	70 - 7 0	65	10	.05G		.40	Si$	DO7
64	V27G							27p	4.0	70 - 14	20	10	.05G		40	Si$	DO7
65	V927△,A△,B△,C△,D△							27p%	4.0	11.7 - 70	25 $	15	.05G		.50	Si$	DO14
66	V927⊘,A⊘,B⊘							27p	4.0	±5.4,2 7,1.35Ø	20	15	50M		.50	Si*	DO14
67	V927%,A%,B%,C%,D%							27p%	4.0	11 7-70	25 $	15	50M		500m		A1st
68	V927E△,EA△,EB△,EC,ED							27p%	4.0	7 0-70	65 $	7 0	50M		500m	Si$	DO14
69	V927E⊘,EA⊘,EB⊘							27p%	4.0	±5 4;2 7,1 35Ø	65	15	5.0M		500m	Si*	DO14
70	VC27,A,B							27p%	4 0	9.0 - 70	50 $	10	.05G				DO7
71	VC227,A,B							27p%	4 0	9 0 - 70	50 $	25	.05G				DO7
72	VC627,A,B							27p%	4 0	3 0,1V-25V$	40 $	200	.05G				DO7
73	VC628,A,B							27p%	4 0	3 0,1V-25V$	40 $	300	.05G				DO7
74	VC826,A,B							27p%	4.0	14 - 70	20 $	7.0	.05G				DO7
75	VC846,A,B							27p%	4 0	7 0 - 70	65 $	7 0	.05G				DO7
76	VH27							27p△	4 0	70 - 14	20 $	7 0	.05G		.50	Si$	DO14
77	VH27E							27p△	4 0	70 - 7 0	65 $	7.0	.05G		.50	Si$	DO14
78	VH927							27p△	4 0	70 - 14	20 $	7.0	.05G		.50	Si$	DO14
79	VH927E							27p△	4 0	70 - 7.0	65 $	7.0	.05G		.50	Si$	DO14
80	VH7083							27p△	4 0	70 - 14	20 $	10	.05G		50	Si$	DO14
81	VH7095							27p△	4 0	70 - 7 0	65 $	10	.05G		.50	Si$	DO14
82	VVC211,A,B,C,D							27p%	4.0		20	7.0	50M			Si	DO7
83	VVC212,A,B,C,D							27p%	4.0		60	7 0	50M			Si	DO7
84	VVC711,A,B,C,D							27p%	4 0		65	15	50M			Si	DO7
85	VVC744,A,B,C,D							27p%	4.0		30	400	50M			Si	DO7
86	VVC745,A,B,C,D							27p%	4.0		20	200	50M			Si	DO7
87	VVC746,A,B,C,D							27p%	4 0		30	25	50M			Si	DO7
88	VVC820,A,B,C,D							27p%	4 0		50	10	50M			Si	DO7
89	VVC821,A,B,C,D							27p%	4 0		50	25	50M			Si	DO7
90	VVC868,A,B,C,D							27p%	4.0		40	300	50M			Si	DO7
91	VVC930,A,B,C,D							27p%	4.0		20	10	50M			Si	DO7
92	VVC931,A,B,C,D							27p%	4.0		65	10	50M			Si	DO7
93	VVC1010,A,B,C,D							27p%	4 0		40	300	50M			Si	DO7
94#	ZC707							27p†	4 0	3.2;2.0V-30V$	30	400	4 0		400m	Si	DO7
95	MA4291	10G						27p	6.0		30			3.0		Si	F3a
96	V27E⊘,EA⊘,EB⊘							27p%	40	±5 4;2 7,1 35Ø	65	7.0	50M		500m	Si*	DO14
97	SD11F60							28p	0.0	28 - 56	60			1.0		Si	P3
98	SD12F60							28p	0 0	28 - 56	60			1 0		Si	F3a
99	SD22F60							28p	0.0	28 - 56	60			1 0		Si	F11
100	SD32F60							28p	0 0	28 - 56	60			1.0		Si	F21
101	SD42F60							28p	0.0	28 - 56	60			1 0		Si	F9a
102	SDGPF60							28p	0 0	28 - 56	60			1.0		Si	DO7
103#	BAY96	25G						28pØ	6.0	28 - 39Ø	120			1.2	20	Si$#	DO4
104	D5940J							30p	0.0		60 ⊘	1 4kØ	50M				F27g
105	D5950J							30p	0.0		90 ⊘	1.0kØ	50M				F27g
106	MA4060B							30p	0 0	20-40	90	50 Ø		2.0		Si	S4d
107	MA4061B							30p	0.0	20 - 40	140			2 0		Si	S4d
108	MA4062B							30p	0 0	20 - 40Ø	70				15	Si	S4d

SYMBOLS AND CODES EXPLAINED IN INTERPRETER

10 VOLTAGE VARIABLE CAPACITORS & VARACTOR DIODES

IN ORDER OF (1) TYPICAL CAPACITANCE, (2) TEST VOLTAGE, and (3) TYPE No.

LINE No.	3 TYPE No	MINIMUM CUTOFF FREQUENCY (Corresponding to Type Numbers in previous column) (Hz)	(Hz)	(Hz)	(Hz)	(Hz)	(Hz)	TYP. CAP. 1 CAP Cj (F)	2 at TEST VOLT (V)	CAPACITANCE RANGE (for V = 0 to PIV) Ø - at TEST VOLT. (pF)	PIV (V)	Q FACTOR MIN. Q	at TEST FREQ (Hz)	MAX. SER. RES. Rs (Ω)	MAX. DISS. @ 25°C (W)	DESCRIPTION MAT.	DWG. No.
1	MA4760B							30p	0 0	20 - 40Ø	90			2.0		Si	Z23
2	MA4761B							30p	0.0	20 - 40Ø	120			2 0		Si	Z23
3	PH0307							30p	0.0	20 - 40Ø	90			1 5		Si	DO4
4	PH0310							30p	0 0	40 - 60Ø	120			1.5		Si	DO4
5	PH0313							30p	0 0	40 - 60Ø	150			1 5		Si	DO4
6	SD11F12							30p	0.0	30 - 62	12			1 0		Si	P3
7	SD12F12							30p	0 0	30 - 62	12			1 0		Si	F3a
8	SD22F12							30p	0 0	30 - 62	12			1 0		Si	F11
9	SD32F12							30p	0 0	30 - 62	12			1 0		Si	F21
10	SD42F12							30p	0 0	30 - 62	12			1 0		Si	F9a
11	SDGPF12							30p	0 0	30 - 62	12			1 0		Si	DO7
12#	SV87C							30p	0 0	20 - 40Ø	90			2 0	20	Si	S201
13#	SV88C							30p	0 0	20 - 40Ø	140			2 0	20	Si	S201
14	VAT17N16,N18,N20							30p†Δ	0.0	28 - 31.9Ø	120	450	50M				Z42
15	VAT57N16,N18,N20							30p†Δ	0 0	28 - 31.9Ø	60	900	50M				Z42
16	VAT77N16,N18,N20							30p†Δ	0 0	28 - 31 9Ø	45	1000	50M				Z42
17#	BB103							30p	3.0	2 65;3 0 - 30V$	30	100	100M	50		Si$#	DO7
18#	BA109							30p	4 0		20	70	50M			Si	DO7
19	NPC103-47							30p	4 0	20 - 45Ø	20	25	05G		25	Si	DO7
20#	1S353							30p	10		35	60	25M			Si*	A1ce
21#	MA332C	1 0G						30p	10	21 - 36Ø	35	40	.02G			SiΔ	A138b
22#	1S556							32p	6 0	23 - 40Ø	20	60	02G			SiΔ	A1dr
23#	1S1558							32p	6.0	25-50Ø	120			1 3	20	Si$$	S19g
24	MA4292							32p	6.0		30			3 0		Si	F3a
25	1N3182							33p	4 0		20	65 Ø	50M	3.0	.16	Si	DO7
26	1N4794,A,B,C,D							33p%	4 0	2 46;0-4V$	20 $	15	50M		50	Si	DO14
27	1N4809,A,B,C,D							33p%	4.0	2 46,0-4V$	60 $	15	50M		50	Si	DO14
28	JAN1N4809A,B							33p%	4.0	2 46, 10-40V$	60 $	15	50M		50	Si	A1dd
29	1N5146,A							33pΔ%	4 0	3 2,4.0-60V$	60 ⊘	200	50M		40	Si	DO7
30	JAN1N5146A							33p	4.0	31 4 - 34.6Ø		200	50m		40	Si	DO7
31	1N5450							33p%	4 0	2 6,2V-30V$	30	350	50M		400m	Si	DO7
32	1N5450A							33p%	4 0	2 6;2V-30V$	30	350	50M		400m	Si	DO7
33	1N5450B							33p%	4 0	2 6,2V-30V$	30	350	50M		400m	Si	DO7
34	1N5450C							33p%	4 0	2 6;2V-30V$	30	350	50M		400m	Si	DO7
35	1N5450D							33p%	4 0	2 6;2V-30V$	30	350	50M		400m	Si	DO7
36	1N5470							33p%	4.0	2 9,2V-30V$	30	500	50M		400m	Si	DO7
37	1N5470A							33p%	4.0	2 9;2V-30V$	30	500	50M		400m	Si	DO7
38	1N5470B							33p%	4 0	2 9,2V-30V$	30	500	50M		400m	Si	DO7
39▼	JAN1N5470B							33p	4 0	31 35-34.65Ø	30 ⊘	500	50M		400m	Si	DO7
40	1N5470C							33p%	4 0	2 9,2V-30V$	30	500	50M		400m	Si	DO7
41	1N5470D							33p%	4 0	2 9;2V-30V$	30	500	50M		400m	Si	DO7
42	1N5689,A,B							33p%	4 0	3 90;2 0V-40V$	40 $	500	50M		400m	*	DO7
43	1N5704,A,B							33p%	4 0	3.55;4.0V-60V$	60 $	350	50M		400m	*	DO7
44#	BBY21							33p†	4 0	8 2;2.0V-100V$	100	100	50M		500m	Si	DO7
45▼	CV5033							33p	4.0	2 5,2 0V-30V$	30	200	50M		400m	Si	DO7
46	D1738,B,C							33p%†	4 0	29 7-36.3Ø	30 ⊘	350	50M		400m	Si#$	A1st
47	D6911							33p	4 0	3 2,2-30V$	30	500	50M		40	Si$	DO7
48#	DC4223							33p	4.0		60	350	10M			Si	C16f
49	FV1014,A,B,C,D							33p%	4 0	5 4$	65 ⊘	150	05G		40	Si#	A1ce
50	FV1114,A,B,C,D							33p%	4 0	6 3$	110 ⊘	150	50M		40	Si#	A1ce
51	G133,A,B							33p%	4.0		20	100 Ø	50M		50	Si$	A60k
52	G233,A,B							33p%	4.0		20	200 Ø	50M		50	Si$	A60k
53	G333,A,B							33p%	4 0		20	300 Ø	50M		50	Si$	A60k
54	G433,A,B							33p%	4 0		20	400 Ø	50M		50	Si$	A60k
55	GC1769							33p	4 0	10-80	60	600	50M		400m	Si	DO7
56	IC533-30,A,B,C							33p%	4.0	65 000-14 000	50	300	50M		500m	Si	M214a
57	IC1033-30,A,B,C							33p%	4 0	65 000-10 000	100	300	50M		500m	Si	M214a
58	KV127							33p	4 0	15-82	25	50	50M		400m	Si	DO14
59	KV128							33p	4 0	11 2-82	50	125	50M		400m	Si	DO14
60	KV129							33p	4.0	9 2-82	80	50	50M		400m	Si	DO14
61	KV130							33p	4 0	8.4-82	100	100	50M		400m	Si	DO14
62	KV154							33p	4 0	9.2-82	80	100	50M		400m	Si	DO14
63	KV160							33p	4 0	15-82	25	150	50M		400m	Si	DO14
64	KV167							33p	4 0	8.4-82	100	75	50M		400m	Si	DO14
65	KV204							33p	4.0	7.0-82	150	75	50M		400m	Si	DO14
66	KV205							33p	4 0	7 0-82	150	100	50M		400m	Si	DO14
67	KV304							33p	4 0	6.7,2 0V-200V$	200	50	50M		400m	Si	DO14
68	KV305							33p	4.0	6 6;2.0V-200V$	200	75	50M		400m	Si	DO14
69	MA4019F							33p	4.0	5 2$	110 ⊘	100	50M			Si#$	A31e
70	MA4273F							33p	4 0	26 4 - 39 6Ø	110	100	05G		50	Si	A31e
71	MA45019							33p†	4 0	4 0,2.0-60V$	75 ⊘	100	50G		35	Si$	A31e
72	MA45041							33p†	4 0	2 7,2 0-30V$	35 ⊘	200	50G		.40	Si$	A31e
73	MC104,A,B							33p%	4 0	5 2,2 0-100V$	110 ⊘	150	50M		50	Si$#	A1ce
74	MC110,A,B							33p%	4.0	4 0,2.0-75V$	85 ⊘	150	50M		.50	Si$#	A1ce
75	MC116,A,B							33p%	4.0	3 0,2.0-40V$	50 ⊘	150	50M		.50	Si$#	A1ce
76	MV33,A							33p	4 0	±6 6,±3 3Ø	20	7 0	.05G		.25	Si	A109
77	MV33E	35G						33p	4 0	±6 6,±3 3Ø	60	7.0	05G		25	Si	A109
78	MV834							33p§	4.0	29 7 - 36 3Ø	30 ⊘	20	.05G		40	Si	DO7
79	MV1638							33p§	4.0	29.7 - 36 3Ø	20 ⊘	200	.05G		.40	Si$	DO7
80	MV1738							33p§	4.0	29 7 - 36.3Ø	30 ⊘	350	.05G		40	Si$	DO7
81	MV1738A							33p	4.0		30 ⊘	350	50M		400m	SiΔ#	DO7
82	MV1876	45G						33p	4.0	29.7 - 36.3Ø	60 ⊘	200	.05G	.55	.40	Si	A1cy
83	MV2109							33p§	4 0	29 7-36 3Ø	30	200	50M		280m	Si	C103
84	MV2209							33p§	4.0	29-37Ø†	25 ⊘	150	50M		280m	Si	C103
85	PC127,A,B							33p%	4 0	4 6,5 0-30V$	30 $	50	50M			Si*	DO14Δ
86	PC128,A,B							33p%	4 0	6 0;5.0-50$	50 $	125	50M			Si*	DO14Δ
87	PC129,A,B							33p%	4.0	7 5;5.0-80$	80 $	50	50M			Si*	DO14Δ
88	PC130,A,B							33p%	4.0	8 2,5 0-100$	100 $	100	50M			Si*	DO14Δ
89	PC603							33pΔ	4 0	2,4; 10-4.0V$	75 $	175	50M		.50	Si*	DO14
90	PC0604A							33p§Δ	4.0		30 $	200	50M				DO7
91	PC0604B							33p§Δ	4 0		30 $	300	50M				DO7
92	PC0604C							33p§Δ	4.0		30 $	400	50M				DO7
93	PC604							33pΔ	4.0	2 4, 10-4.0V$	50 $	175	50M		50	Si*	DO14
94	PC605							33pΔ	4.0	2.4; 10-4 0V$	30 $	175	50M		.50	Si*	DO14
95	PC608							33pΔ	4 0	2.4; 10-4 0V$	100 $	150	50M		50	Si*	DO14
96	PC609							33pΔ	4.0	2 4, 10-4.0V$	75 $	150	50M		50	Si*	DO14
97	PC610							33pΔ	4 0	2 4; 10-4 0V$	50 $	150	50M		50	Si*	DO14
98	PC611							33pΔ	4 0	2 4; 10-4 0V$	30 $	150	50M		.50	Si*	DO14
99	PC613							33pΔ	4.0	2 4, 10-4.0V$	125 $	125	50M		.50	Si*	DO14
100	PC0614A							33p§Δ	4 0		60 $	200	50M				DO7
101	PC0614B							33p§Δ	4.0		60 $	300	50M				DO7
102	PC0614C							33p§Δ	4 0		60 $	400	50M				DO7
103	PC614							33pΔ	4.0	2.4; 10-4 0V$	100 $	125	50M		.50	Si*	DO14
104	PC615							33pΔ	4.0	2.4, 10-4 0V$	75 $	125	50M		.50	Si*	DO14
105	PC616							33pΔ	4.0	2.4; 10-4.0V$	50 $	125	50M		50	Si*	DO14
106	PC617							33pΔ	4.0	2.4, 10-4.0V$	30 $	125	50M		50	Si*	DO14
107	PC618							33pΔ	4 0	2 4; 10-4.0V$	150 $	100	50M		.50	Si*	DO14
108	PC619							33pΔ	4.0	2 4; 10-4 0V$	125 $	100	50M		50	Si*	DO14
109	PC620							33pΔ	4 0	2 4, 10-4 0V$	100 $	100	50M		50	Si*	DO14
110	PC621							33pΔ	4.0	2 4, 10-4 0V$	75 $	100	50M		.50	Si*	DO14

SYMBOLS AND CODES EXPLAINED IN INTERPRETER

10 VOLTAGE VARIABLE CAPACITORS & VARACTOR DIODES

IN ORDER OF (1) TYPICAL CAPACITANCE, (2) TEST VOLTAGE, and (3) TYPE No.

LINE No.	3 TYPE No.	MINIMUM CUTOFF FREQUENCY (Corresponding to Type Numbers in previous column) (Hz)	(Hz)	(Hz)	(Hz)	(Hz)	(Hz)	TYP. CAP. 1 CAP. Cj (F)	2 at TEST VOLT (V)	CAPACITANCE RANGE (for V = 0 to PIV) Ø - at TEST VOLT. (pF)	PIV (V)	Q FACTOR MIN. Q	at TEST FREQ (Hz)	MAX. SER. RES. Rs (Ω)	MAX. DISS @ 25°C (W)	DESCRIPTION MAT.	DWG. No.
1	PC622							33pΔ	4 0	2.4, 10-4.0V$	50 $	100	50M		50	Si*	DO14
2	PC623							33pΔ	4.0	2.4, 10-4 0V$	30 $	100	50M		.50	Si*	DO14
3	PC0624A							33p§Δ	4.0	2 4; 10-4 0V$	90 $	200	50M				DO7
4	PC0624B							33p§Δ	4.0		90 $	300	50M				DO7
5	PC624							33pΔ	4.0	2.4; 10-4.0V$	150 $	75	50M		50	Si*	DO14
6	PC625							33pΔ	4.0	2 4; 10-4 0V$	125 $	75	50M		.50	Si*	DO14
7	PC626							33pΔ	4 0	2.4;.10-4 0V$	100 $	75	50M		.50	Si*	DO14
8	PC627							33pΔ	4 0	2.4, 10-4.0V$	75 $	75	50M		.50	Si*	DO14
9	PC628							33pΔ	4 0	2.4;.10-4 0V$	50 $	75	50M		.50	Si*	DO14
10	PC629							33pΔ	4 0	2 4;.10-4 0V$	30 $	75	50M		.50	Si*	DO14
11	PC630							33pΔ	4 0	2.4, 10-4.0V$	150 $	50	50M		.50	Si*	DO14
12	PC631							33pΔ	4 0	2.4, 10-4.0V$	125 $	50	50M		.50	Si*	DO14
13	PC632							33pΔ	4.0	2 4, 10-4 0V$	100 $	50	50M		.50	Si*	DO14
14	PC633							33pΔ	4.0	2.4; 10-4 0V$	75 $	50	50M		.50	Si*	DO14
15	PC0634A							33p§Δ	4.0		120 $	200	50M				DO7
16	PC634							33pΔ	4.0	2.4, 10-4 0V$	50 $	50	50M		.50	Si*	DO14
17	PC635							33pΔ	4 0	2 4,.10-4 0V$	30 $	50	50M		.50	Si*	DO14
18	PC0644A							33p§Δ	4 0		150 $	200	50M				DO7
19	PC1404A							33p§Δ	4.0		30 $	200	50M				A2u
20	PC1404B							33p§Δ	4 0		30 $	300	50M				A2u
21	PC1404C							33p§Δ	4 0		30 $	400	50M				A2u
22	PC1414A							33p§Δ	4 0		60 $	200	50M				A2u
23	PC1414B							33p§Δ	4 0		60 $	300	50M				A2u
24	PC1414C							33p§Δ	4.0		60 $	400	50M				A2u
25	PC1424A							33p§Δ	4.0		90 $	200	50M				A2u
26	PC1424B							33p§Δ	4 0		90 $	300	50M				A2u
27	PC1434A							33p§Δ	4 0		120 $	200	50M				A2u
28	PC1444A							33p§Δ	4 0		150 $	200	50M				A2u
29	PC2604A							33p§Δ	4 0		30 $	200	50M				DO7
30	PC2604B							33p§Δ	4 0		30 $	300	50M				DO7
31	PC2604C							33p§Δ	4 0		30 $	400	50M				DO7
32	PC2614A							33p§Δ	4 0		60 $	200	50M				DO7
33	PC2614B							33p§Δ	4 0		60 $	300	50M				DO7
34	PC2614C							33p§Δ	4.0		60 $	400	50M				DO7
35	PC2624A							33p§Δ	4 0		90 $	200	50M				DO7
36	PC2624B							33p§Δ	4.0		90 $	300	50M				DO7
37	PC2624C							33p§Δ	4 0		90 $	400	50M				DO7
38	PC2634A							33p§Δ	4 0		120 $	200	50M				DO7
39	PC2634B							33p§Δ	4.0		120 $	300	50M				DO7
40	PC2644A							33p§Δ	4 0		150 $	200	50M				DO7
41	PC2644B							33p§Δ	4 0		150 $	300	50M				DO7
42▼	PG133,A,B							33p%	4 0	4 6;2 0V-65V$	65 $	200	50M				DO7
43▼	PG233,A,B							33p%	4 0	4 5;2 0V-65V$	65 $	200	50M				DO7
44▼	PG333,A,B							33p%	4.0	4.0,2 0V-50V$	50 $	300	50M				DO7
45	PV002,A,B							33p%	4.0		100	100	50M		10		DO4
46	PV005,A,B							33p%	4.0		100	150	50M		10		DO4
47	PV008,A,B							33p%	4 0		150	100	50M		10		DO4
48	PV1434							33p§	4 0		120	400	500M				A2u
49	SQ1238A,B,C							33p§%	4 0		30 ⊘	700	50M		250m	Si#$	A1ah
50	SQ1288A,B,C							33p§%	4 0		30 ⊘	350	50M		250m	Si#$	A1ah
51	SQ1738,B,C							33p§%	4 0	29 7-36.3Ø	30 ⊘	700	50M		500m	Si#$	DO7
52	SQ5450A							33p%	4 0		30 ⊘	350	50M		400m		DO7
53	SQ5450B							33p%	4.0		30 ⊘	350	50M		400m		DO7
54	SQ5450C							33p%	4 0		30 ⊘	350	50M		400m		DO7
55	SQ5470A							33p%	4 0		30 ⊘	500	50M		400m		DO7
56	SQ5470B							33p%	4 0		30 ⊘	500	50M		400m		DO7
57	SQ5470C							33p%	4 0		30 ⊘	500	50M		400m		DO7
58#	SV77G							33p	4 0	23 - 43Ø	90			2 0	5 0	Si$	
59	V33⊘,A⊘,B⊘							33p	4 0	±6.6,3 3,1 65Ø	20	7 0	50M		50	Si*	DO14
60	V33%,A%,B%,C,D							33p%	4 0	14 2-85	25 $	15	50M		500m		A1st
61	V33EΔ,EAΔ,EBΔ,EC,ED							33p%	4 0	9.0-85	60 $	7 0	50M		500m	Si$	DO14
62	V33E⊘,EA⊘,EB⊘							33p%	4.0	±6.6;3.3,1 65Ø	60	7 0	50M		500m	Si*	DO14
63	V33EG							33p	4 0	85 - 9 0	60	10	05G		40	Si$	DO7
64	V33G							33p	4.0	85 - 17	20	10	05G		40	Si$	DO7
65	V933Δ,AΔ,BΔ,CΔ,DΔ							33p%	4.0	14 2 - 85	25 $	15	05G		50	Si$	DO14
66	V933⊘,A⊘,B⊘							33p	4.0	±6 6,3 3,1 65Ø	20	15	50M		500m	Si*	DO14
67	V933%,A%,B%,C%,D%							33p%	4 0	14 2-85	25 $	15	50M		500m		A1st
68	V933EΔ,EAΔ,EBΔ,EC,ED							33p%	4 0	9.0-85	60 $	7 0	50M		500m	Si$	DO14
69	V933E⊘,EA⊘,EB⊘							33p%	4 0	±6.6;3 3,1 65Ø	60	15	5 0M		500m	Si*	DO14
70	VA127							33p	4 0	82 - 15	25	50	05G		.50	Si$	A131
71	VA128							33p	4 0	82 - 11 2	50	125	05G		50	Si$	A131
72	VA129							33p	4 0	82 - 9 2	80	50	05G		50	Si$	A131
73	VA130							33p	4.0	82 - 8.4	100	100	.05G		50	Si$	A131
74	VA154							33p	4 0	82 - 9 2	80	100	05G		50	Si$	A131
75	VA160							33p	4 0	82 - 15	25	150	05G		50	Si$	A131
76	VA167							33p	4 0	82 - 8 4	100	75	05G		50	Si$	A131
77	VA204	37GØ						33p	4 0	82-7 0	150	75	50M	1 3	50	Si$	A131
78	VA205	50GØ						33p	4.0	82-7 0	150	100	50M	1 0	50	Si$	A131
79	VA304							33p	4 0	6.7,2 0-200V$	200	50	50M		50	Si$	DO14Δ
80	VA305							33p	4 0	6 6;2 0-200V$	200	75	50M		50	Si$	DO14Δ
81	VC33,A,B							33p%	4 0	11 - 85	50 $	10	.05G				DO7
82	VC233,A,B							33p%	4.0	11 - 85	50 $	25	.05G				DO7
83	VC332,A,B							33p%	4 0	3.0;1V-25V$	25 $	50	05G				DO7
84	VC333,A,B							33p%	4 0	4 0;2V-80V$	80 $	50	05G				DO7
85	VC432,A,B							33p%	4.0	3.0;1V-25V$	25 $	100	.05G				DO7
86	VC433,A,B							33p%	4 0	4 0,1V-50V$	50 $	100	05G				DO7
87	VC434,A,B							33p%	4 0	4 0,2 0-80V$	100 $	100	50M				DO7
88	VC633,A,B							33p%	4 0	3 0;1V-25V$	40 $	200	05G				DO7
89	VC634,A,B							33p%	4.0	3 0;1V-25V$	40 $	300	05G				DO7
90	VC827,A,B							33p%	4 0	17 - 85	20 $	7 0	05G				DO7
91	VC847,A,B							33p%	4 0	9.0 - 85	60 $	7 0	.05G				DO7
92	VG133,A,B,C,D							33p%	4 0	4 6;2.0-65V$	70	200	50M		40	Si$	DO7
93	VG233,A,B,C,D							33p%	4 0	4 5;2.0-65V$	70	200	50M		.40	Si$	DO7
94	VG333,A,B,C,D							33p%	4 0	4 0;2 0-50V$	55	200	50M		.40	Si$	DO7
95	VH33							33pΔ	4.0	85 - 17	20 $	7 0	.05G		.50	Si$	DO14
96	VH33E							33pΔ	4 0	85 - 9 0	60 $	7 0	.05G		.50	Si$	DO14
97	VH127	10GØ						33pΔ	4.0	3.5$	25 $	50	50M	1.9	.50	Si$	DO14
98	VH128	30GØ						33pΔ	4.0	4 0$	50 $	125	50M	80	.50	Si$	DO14
99	VH129	20GØ						33pΔ	4 0	4.0$	80 $	50	50M	1 9	50	Si$	DO14
100	VH130	40GØ						33pΔ	4.0	5 2$	100 $	100	50M	1 0	.50	Si$	DO14
101	VH164	30GØ						33pΔ	4 0	5 2$	100 $	75	50M	1 3	.50	Si$	DO14
102	VH171	40GØ						33pΔ	4 0	4.0$	80 $	100	50M	1 0	.50	Si$	DO14
103	VH179	20GØ						33pΔ	4 0	4.0$	50 $	75	50M	1.4	.50	Si$	DO14
104	VH187	30GØ						33pΔ	4 0	3 5$	25 $	150	50M	.60	.50	Si$	DO14
105	VH208	50GØ						33pΔ	4 0	6.5$	150 $	100	50M	1 0	50	Si$	DO14
106	VH209	35GØ						33pΔ	4 0	6.5$	150 $	60	50M	1 6	.50	Si$	DO14
107	VH229	40GØ						33pΔ	4 0	6 7$	200 $	50	50M	1 9	50	Si$	DO14
108	VH933							33pΔ	4 0	85 - 17	20 $	7 0	.05G		50	Si$	DO14

SYMBOLS AND CODES EXPLAINED IN INTERPRETER

10 VOLTAGE VARIABLE CAPACITORS & VARACTOR DIODES

IN ORDER OF (1) TYPICAL CAPACITANCE, (2) TEST VOLTAGE, and (3) TYPE No.

LINE No	TYPE No	3 MINIMUM CUTOFF FREQUENCY (Corresponding to Type Numbers in previous column) (Hz)	(Hz)	(Hz)	(Hz)	(Hz)	(Hz)	TYP. CAP. 1 CAP Cj (F)	2 at TEST VOLT (V)	CAPACITANCE RANGE (for V = 0 to PIV) Ø - at TEST VOLT (pF)	PIV (V)	Q FACTOR MIN. Q	at TEST FREQ (Hz)	MAX. SER. RES Rs (Ω)	MAX. DISS. @ 25°C (W)	DESCRIPTION MAT.	DWG. No.
1	VH933E							33pΔ	4 0	85 - 9 0	60 $	7 0	05G		50	Si$	DO14
2	VH7084							33pΔ	4.0	85 - 17	20 $	10	05G		50	Si$	DO14
3	VH7096							33pΔ	4.0	85 - 9 0	60 $	10	05G		50	Si$	DO14
4	VM603,A,B,C,D							33p%	4 0	3 6;4.0-75V$	83	175			50	Si$	DO14
5	VM604,A,B,C,D							33p%	4 0	2 9,4.0-50V$	55	175			50	Si$	DO14
6	VM605,A,B,C,D							33p%	4 0	2 3;4 0-30V$	33	175			50	Si$	DO14
7	VM608,A,B,C,D							33p%	4 C	4 4;4 0-100V$	110	150			50	Si$	DO14
8	VM609,A,B,C,D							33p%	4 0	3.6,4 0-75V$	83	150			50	Si$	DO14
9	VM610,A,B,C,D							33p%	4 0	2 9;4 0-50V$	55	150			50	Si$	DO14
10	VM611,A,B,C,D							33p%	4 0	2 3;4 0-30V$	33	150			50	Si$	DO14
11	VM612,A,B,C,D							33p%	4 0	5 1,4.0-150V$	165	125			50	Si$	DO14
12	VM613,A,B,C,D							33p%	4 0	4 8;4 0-125V$	138	125			50	Si$	DO14
13	VM614,A,B,C,D							33p%	4 0	4 4;4 0-100V$	110	125			50	Si$	DO14
14	VM615,A,B,C,D							33p%	4 0	3.6,4 0-75V$	83	125			50	Si$	DO14
15	VM616,A,B,C,D							33p%	4 0	2.9,4 0-50V$	55	125			.50	Si$	DO14
16	VM617,A,B,C,D							33p%	4 0	2 3,4.0-30V$	33	125			50	Si$	DO14
17	VM618,A,B,C,D							33p%	4 0	5 1,4 0-150V$	165	100			50	Si$	DO14
18	VM619,A,B,C,D							33p%	4 0	4 8,4 0-125V$	138	100			.50	Si$	DO14
19	VM620,A,B,C,D							33p%	4 0	4 4,4 0-100V$	110	100			50	Si$	DO14
20	VM621,A,B,C,D							33p%	4 0	3 6;4 0-75V$	83	100			50	Si$	DO14
21	VM622,A,B,C,D							33p%	4.0	2 9;4.0-50V$	55	100			50	Si$	DO14
22	VM623,A,B,C,D							33p%	4 0	2 3;4.0-30V$	33	100			50	Si$	DO14
23	VM624,A,B,C,D							33p%	4 0	5 1;4.0-150V$	165	75			50	Si$	DO14
24	VM625,A,B,C,D							33p%	4 0	4.8,4 0-125V$	138	75			50	Si$	DO14
25	VM626,A,B,C,D							33p%	4 0	4 4;4 0-100V$	110	75			.50	Si$	DO14
26	VM627,A,B,C,D							33p%	4 0	3 6;4.0-75V$	83	75			50	Si$	DO14
27	VM628,A,B,C,D							33p%	4 0	2 9,4.0-50V$	55	75			50	Si$	DO14
28	VM629,A,B,C,D							33p%	4 0	2 3,4.0-30V$	33	75			50	Si$	DO14
29	VM630,A,B,C,D							33p%	4 0	5 1;4 0-150V$	165	50			50	Si$	DO14
30	VM631,A,B,C,D							33p%	4 0	4 8;4 0-125V$	138	50			50	Si$	DO14
31	VM632,A,B,C,D							33p%	4 0	4 4,4.0-100V$	110	50			50	Si$	DO14
32	VM633,A,B,C,D							33p%	4 0	3.6;4.0-75V$	83	50			50	Si$	DO14
33	VM634,A,B,C,D							33p%	4 0	2.9;4 0-50V$	55	50			.50	Si$	DO14
34	VM635,A,B,C,D							33p%	4 0	2 3;4.0-30V$	33	50			50	Si$	DO14
35	VVC213,A,B,C,D							33p%	4 0		20	7 0	50M			Si	DO7
36	VVC214,A,B,C,D							33p%	4 0		60	7 0	50M			Si	DO7
37	VVC409,A,B,C,D							33p%	4 0	±6 6Ø	25	50	05G			Si	DO7
38	VVC410,A,B,C,D							33p%	4 0	±6 6Ø	50	125	05G			Si	DO7
39	VVC411,A,B,C,D							33p%	4 0	±6.6Ø	80	50	05G			Si	DO7
40	VVC712,A,B,C,D							33p%	4 0		20	7 0	50M			Si	DO7
41	VVC713,A,B,C,D							33p%	4 0		30	50	50M			Si	DO7
42	VVC723,A,B,C,D							33p%	4 0		100	100	50M			Si	DO7
43	VVC747,A,B,C,D							33p%	4 0		30	20	50M			Si	DO7
44	VVC748,A,B,C,D							33p%	4 0		30	350	50M			Si	DO7
45	VVC749,A,B,C,D							33p%	4 0		20	200	50M			Si	DO7
46	VVC822,A,B,C,D							33p%	4 0		25	50	50M			Si	DO7
47	VVC823,A,B,C,D							33p%	4 0		50	10	50M			Si	DO7
48	VVC824,A,B,C,D							33p%	4 0		50	25	50M			Si	DO7
49	VVC825,A,B,C,D							33p%	4 0		50	50	50M			Si	DO7
50	VVC869,A,B,C,D							33p%	4 0		40	300	50M			Si	DO7
51	VVC870,A,B,C,D							33p%	4 0		30	100	50M			Si	DO7
52	VVC871,A,B,C,D							33p%	4 0		40	200	50M			Si	DO7
53	VVC872,A,B,C,D							33p%	4.0		60	100	50M			Si	DO7
54	VVC873,A,B,C,D							33p%	4 0		110	100	50M			Si	DO7
55	VVC932,A,B,C,D							33p%	4 0		20	10	50M			Si	DO7
56	VVC933,A,B,C,D							33p%	4 0		25	150	50M			Si	DO7
57	VVC934,A,B,C,D							33p%	4 0		50	75	50M			Si	DO7
58	VVC935,A,B,C,D							33p%	4 0		60	10	50M			Si	DO7
59	VVC936,A,B,C,D							33p%	4 0		80	100	50M			Si	DO7
60	VVC937,A,B,C,D							33p%	4 0		100	75	50M			Si	DO7
61	VVC938,A,B,C,D							33p%	4 0		100	100	50M			Si	DO7
62	VVC939,A,B,C,D							33p%	4 0		150	60	50M			Si	DO7
63	VVC940,A,B,C,D							33p%	4 0		150	100	50M			Si	DO7
64	VVC1011,A,B,C,D							33p%	4 0		40	300	50M			Si	DO7
65#	ZC708Ø							33pt	4 0	3.2,2 0V-30V$	30	400	4 0		400m	Si	DO7
66	VAT18N16,N18,N20							34pt△	0 0	32 - 35 9Ø	120	450	50M				Z42
67	VAT58N16,N18,N20							34pt△	0 0	32 - 35 9Ø	60	800	50M				Z42
68	VAT78N16,N18,N20							34pt△	0 0	32 - 35 9Ø	45	1000	50M				Z42
69#	BA119							35p	2 0	45 - 65Ø	50	100 Ø	30M	1 0		Si	DO7
70#	MV9351							35p	2	5 0;7.0-10V	30 ⊠	40	50M		200m	Si△	DO7
71	1N950							35p	4.0	6 0 - 88	130	7 0	05G	10		Si	DO7
72	1N950A							35p	4 0		130	7 0	50M			Si	DO7
73	1N954							35p	4.0	14 - 88	25	7 0	05G	11		Si	DO7
74#	MV9352							35p	4	5.0;7 0-10V	30 ⊠	40	50M		200m	Si△	DO7
75	SC3							35p	4 0		18						DO7
76	JAN1N4386							35p	6 0	20-50Ø	250 ⊠					Si	DO4
77	1N4387							35pØ	6.0		150 ⊠	150	50M	1 5	20 ⊠	Si△	DO4
78#	SFD461	5.0G						35p	6.0	20 - 50Ø	30				3 0 ⊠	Si$	Z16
79#	SFD462	5 0G						35p	6 0	20 - 50Ø	60				3 0 ⊠	Si$	Z16
80#	SFD463	5 0G						35p	6.0	20 - 50Ø	90				3 0 ⊠	Si$	Z16
81#	SFD464	5 0G						35p	6.0	20 - 50Ø	120				3 0 ⊠	Si$	Z16
82	SD11F18							36p	0 0	36 - 75	18			1.0		Si	P3
83	SD12F18							36p	0 0	36 - 75	18			1 0		Si	F3a
84	SD22F18							36p	0 0	36 - 75	18			1 0		Si	F11
85	SD32F18							36p	0 0	36 - 75	18			1 0		Si	F21
86	SD42F18							36p	0 0	36 - 75	18			1.0		Si	F9a
87	SDGPF18							36p	0 0	36 - 75	18			1.0		Si	DO7
88#	BB104							36p	3.0	2 65,3.0 - 30V$	30	100	100M	40		Si$#	M396
89	MA4352G1							37 p	12	25 - 50	12			50	8 0	Si	F21$
90	1N4795,A,B,C,D							39p%	4.0	2.44;0-4.0V$	55 $	15	50M		50	Si	DO14
91	1N4810,A,B,C,D							39p%	4 0	2 44;0-4.0V$	55 $	15	50M		50	Si	DO14
92	JAN1N4810A,B							39p%	4 0	2.44;.10-40V$	55 $	15	50M		500m	Si	A1dd
93	1N5147,A							39pΔ%	4 0	3 2;4.0-60V$	60 ⊠	200	50G		400m	Si	DO7
94	JAN1N5147A							39p	4 0	37.1 - 40.9Ø		200	50m		40	Si	DO7
95	1N5451							39p%	4 0	2 6;2V-30V$	30	300	50M		400m	Si	DO7
96	1N5451A							39p%	4 0	2.6,2V-30V$	30	300	50M		400m	Si	DO7
97	1N5451B							39p%	4.0	2 6;2V-30V$	30	300	50M		400m	Si	DO7
98	1N5451C							39p%	4 0	2.6;2V-30V$	30	300	50M		400m	Si	DO7
99	1N5451D							39p%	4 0	2.6;2V-30V$	30	300	50M		400m	Si	DO7
100	1N5471							39p%	4.0	2.9;2V-30V$	30	450	50M		400m	Si	DO7
101	1N5471A							39p%	4 0	2.9;2V-30V$	30	450	50M		400m	Si	DO7
102	1N5471B							39p%	4.0	2.9;2V-30V$	30	450	50M		400m	Si	DO7
103▼	JAN1N5471B							39p	4.0	37 05-40.95Ø	30 ⊠	450	50M		400m	Si	DO7
104	1N5471C							39p%	4.0	2.9;2V-30V$	30	450	50M		400m	Si	DO7
105	1N5471D							39p%	4.0	2.9;2V-30V$	30	450	50M		400m	Si	DO7
106	1N5690,A,B							39p%	4 0	3.90;2.0V-40V$	40 $	450	50M		400m	*	DO7
107	1N5705,A,B							39p%	4 0	3.60;4.0V-60V$	60 $	325	50M		400m	*	DO7
108▼	CV5039							39p	4 0	2.5;2.0V-30V$	30	150	50M		400m	Si	DO7
109	D1740,B,C							39pt%	4 0	35.1-42 9Ø	30 ⊠	350	50M		400m	Si#$	A1st
110#	DC4224							39p	4.0		60	350	10M			Si	C16f

SYMBOLS AND CODES EXPLAINED IN INTERPRETER

10 VOLTAGE VARIABLE CAPACITORS & VARACTOR DIODES

IN ORDER OF (1) TYPICAL CAPACITANCE, (2) TEST VOLTAGE, and (3) TYPE No.

LINE No	TYPE No	MINIMUM CUTOFF FREQUENCY (Corresponding to Type Numbers in previous column) (Hz)	(Hz)	(Hz)	(Hz)	(Hz)	(Hz)	TYP. CAP 1 CAP Cj (F)	2 at TEST VOLT (V)	CAPACITANCE RANGE (for V = 0 to PIV) Ø - at TEST VOLT (pF)	PIV (V)	Q FACTOR MIN. Q	at TEST FREQ (Hz)	MAX. SER. RES. Rs (Ω)	MAX. DISS. @ 25°C (W)	DESCRIPTION MAT.	DWG. No.
1	GC1770							39p	4 0	13-90	60	600	50M		400m	Si	DO7
2	IC539-30,A,B,C							39p%	4 0	75.000-16 500	50	300	50M		500m	Si	M214a
3	IC1039-30,A,B,C							39p%	4 0	75.000-11 000	100	300	50M		500m	Si	M214a
4	MA45020							39pt	4 0	4 0,2 0-60V$	75 ⊘	100	50G		35	Si$	A31e
5	MA45042							39pt	4 0	2.7,2 0-30V$	35 ⊘	175	50G		40	Si$	A31e
6	MV39,A							39p	4 0	±7.8,±3.9Ø	20	7 0	05G		.25	Si	A109
7	MV39E	35G						39p	4 0	±7 8,±3 9Ø	55	7.0	.05G		.25	Si	A109
8	MV835							39p§	4 0	35 1-42 9Ø	30 ⊘	20	50M		40	Si	DO7
9	MV1640							39p§	4 0	35.1 - 42 9Ø	20 ⊘	200	05G		40	Si$	DO7
10	MV1740							39p§	4 0	35 1 - 42.9Ø	30 ⊘	350	05G		40	Si$	DO7
11	MV1740A							39p	4 0		30 ⊘	350	50M		400m	SiΔ#	DO7
12	MV2110							39p§	4 0	35 1-42 9Ø	30	150	50M		280m	Si	C103
13▼	PG139,A,B							39p%	4.0	4.6;2 0V-65V$	65 $	200	50M				DO7
14▼	PG239,A,B							39p%	4 0	4.5;2 0V-65V$	65 $	200	50M				DO7
15▼	PG339,A,B							39p%	4 0	4.0;2.0V-50V$	50 $	300	50M				DO7
16	SQ1740,B,C							39p§%	4 0	35 1-42 9Ø	30 ⊘	600	50M		500m	Si#$	DO7
17	SQ5451A							39p%	4 0		30 ⊘	300	50M		400m		DO7
18	SQ5451B							39p%	4 0		30 ⊘	300	50M		400m		DO7
19	SQ5451C							39p%	4 0		30 ⊘	300	50M		400m		DO7
20	SQ5471A							39p%	4 0		30 ⊘	450	50M		400m		DO7
21	SQ5471B							39p%	4 0		30 ⊘	450	50M		400m		DO7
22	SQ5471C							39p%	4 0		30 ⊘	450	50M		400m		DO7
23	V39⊘,A⊘,B⊘							39p	4 0	±7 8,3 9,1 9Ø	20	7 0	50M		50	Si*	DO14
24	V39%,A%,B%,C,D							39p%	4 0	16 6-100	25 $	15	50M		500m		A1st
25	V39EΔ,EAΔ,EBΔ,EC,ED							39p%	4 0	11-100	55 $	7 0	50M		500m	Si$	DO14
26	V39E⊘,EA⊘,EB⊘							39p%	4 0	±7 8;3 9,1 9Ø	55	7.0	50M		500m	Si*	DO14
27	V39EG							39p	4 0	100 - 10	55	10	05G		40	Si$	DO7
28	V39G							39p	4 0	100 - 20	20	10	05G		40	Si$	DO7
29	V939Δ,AΔ,BΔ,CΔ,DΔ							39p%	4 0	16 6 - 100	25 $	15	05G		50	Si$	DO14
30	V939⊘,A⊘,B⊘							39p	4 0	±7 8,3 9,1 9Ø	20	15	50M		50	Si*	DO14
31	V939%,A%,B%,C%,D%							39p%	4 0	16 6-100	25 $	15	50M		500m		A1st
32	V939EΔ,EAΔ,EBΔ,EC,ED							39p%	4 0	11-100	55 $	7 0	50M		500m	Si$	DO14
33	V939E⊘,EA⊘,EB⊘							39p%	4 0	±7 8,3 9,1 9Ø	55	15	5 0M		500m	Si*	DO14
34	VC39,A,B							39p%	4 0	13 - 100	50 $	10	05G				DO7
35	VC239,A,B							39p%	4 0	13 - 100	50 $	25	05G				DO7
36	VC639,A,B							39p%	4 0	3 0,1V-25V$	40 $	200	05G			Si	DO7
37	VC641,A,B							39p%	4 0	3 0;1V-25V$	40 $	300	05G				DO7
38	VC828,A,B							39p%	4 0	20 - 100	20 $	7 0	05G				DO7
39	VC848,A,B							39p%	4 0	11 - 100	55 $	7 0	05G				DO7
40	VG139,A,B,C,D							39p%	4 0	4.65;2 0-65V$	70	200	50M		40	Si$	DO7
41	VG239,A,B,C,D							39p%	4 0	4 55,2 0-65V$	70	200	50M		40	Si$	DO7
42	VG339,A,B,C,D							39p%	4 0	4 0;2.0-50V$	55	300	50M		40	Si$	DO7
43	VH39							39pΔ	4 0	100 - 20	20 $	7 0	05G		.50	Si$	DO14
44	VH39E							39pΔ	4 0	100 - 11	55 $	7 0	05G		50	Si$	DO14
45	VH939							39pΔ	4 0	100 - 20	20 $	7 0	05G		50	Si$	DO14
46	VH939E							39pΔ	4 0	100 - 11	55 $	7 0	.05G		.50	Si$	DO14
47	VH7085							39pΔ	4 0	100 - 20	20 $	10	05G		50	Si$	DO14
48	VH7097							39pΔ	4 0	100 - 10	55 $	10	05G		50	Si$	DO14
49	VVC215,A,B,C,D							39p%	4 0		20	7 0	50M			Si	DO7
50	VVC216,A,B,C,D							39p%	4 0		55	7 0	50M			Si	DO7
51	VVC714,A,B,C,D							39p%	4 0		20	15	50M			Si	DO7
52	VVC750,A,B,C,D							39p%	4 0		20	200	50M			Si	DO7
53	VVC751,A,B,C,D							39p%	4 0		30	20	50M			Si	DO7
54	VVC752,A,B,C,D							39p%	4 0		30	350	50M			Si	DO7
55	VVC826,A,B,C,D							39p%	4 0		50	10	50M			Si	DO7
56	VVC827,A,B,C,D							39p%	4 0		60	25	50M			Si	DO7
57	VVC874,A,B,C,D							39p%	4 0		40	300	50M			Si	DO7
58	VVC941,A,B,C,D							39p%	4 0		20	10	50M			Si	DO7
59	VVC942,A,B,C,D							39p%	4 0		55	10	50M			Si	DO7
60	VVC1012,A,B,C,D							39p%	4 0		40	300	50M			Si	DO7
61#	ZC709⊘							39pt	4 0	3 2,2 0V-30V$	30	350	4 0		400m	Si	DO7
62	VAT19N16,N18,N20							40pt△	0 0	36 - 44Ø	120	800	50M				Z42
63	VAT59N16,N18,N20							40pt△	0 0	36 - 44Ø	60	800	50M				Z42
64	VAT79N16,N18,N20							40pt△	0 0	36 - 44Ø	45	1000	50M				Z42
65#	BA125							40p	2 0	30 - 50	30	260 Ø	30M	50 ⊘	25	SiΔ	DO7
66	SD11G24							42p	0 0	42 - 87	24			1 0		Si	P3
67	SD12G24							42p	0 0	42 - 87	24			1 0		Si	F3a
68	SD22G24							42p	0 0	42 - 87	24			1 0		Si	F11
69	SD32G24							42p	0 0	42 - 87	24			1.0		Si	F21
70	SD42G24							42p	0 0	42 - 87	24			1 0		Si	F9a
71	SDGPG24							42p	0 0	42 - 87	24			1.0		Si	DO7
72▼	BV120	9 0G						43p	1 0	14-100	30			1.4	250m		
73	VVC828,A,B,C,D							46p%	4 0		25	50	50M			Si	DO7
74	1N3556							47p	4 0		100	50	100M			Si	A60p
75	1N4599							47p	4 0	5 0,2 0-100V$	110	100	50M	100	50		DO14
76	1N4599A							47p	4 0		110	100	50M			Si	DO7
77	1N4796,A,B,C,D							47p%	4 0	2 43,0-4 0V$	20 $	15	50M		50	Si	DO14
78	1N4811,A,B,C,D							47p%	4 0	2 43;0-4 0V$	50 $	15	50M		50	Si	DO14
79	JAN1N4811A,B							47p	4 0	2 43, 10-40V$	50 $	15	50M		500m	Si	A1dd
80	JAN1N5148A							47p	4 0	44 7 - 49 3Ø		200	50m		40	Si	DO7
81	1N5452							47p%	4 0	2 6,2V-30V$	30	250	50M		400m	Si	DO7
82	1N5452A							47p%	4 0	2 6,2V-30V$	30	250	50M		400m	Si	DO7
83	1N5452B							47p%	4 0	2 6,2V-30V$	30	250	50M		400m	Si	DO7
84	1N5452C							47p%	4 0	2 6,2V-30V$	30	250	50M		400m	Si	DO7
85	1N5452D							47p%	4 0	2 6,2V-30V$	30	250	50M		400m	Si	DO7
86	1N5472							47p%	4 0	2 9,2V-30V$	30	400	50M		400m	Si	DO7
87	1N5472A							47p%	4 0	2 9,2V-30V$	30	400	50M		400m	Si	DO7
88	1N5472B							47p%	4 0	2 9;2V-30V$	30	400	50M		400m	Si	DO7
89▼	JAN1N5472B							47p	4 0	44 65-49 35Ø	30 ⊘	400	50M		400m	Si	DO7
90	1N5472C							47p%	4 0	2 9,2V-30V$	30	400	50M		400m	Si	DO7
91	1N5472D							47p%	4 0	2 9,2V-30V$	30	400	50M		400m	Si	DO7
92	1N5691,A,B							47p%	4 0	3 90;2 0V-40V$	40 $	400	50M		400m	*	DO7
93	1N5706,A,B							47p%	4 0	3 60,4 0V-60V$	60 $	300	50M		400m	*	DO7
94#	BBY22							47pt	4 0	8 0,2 0V-100V$	100	100	50M		500m	Si	DO14
95▼	CV5047							47p	4 0	2 5;2 0V-30V$	30	150	50M		400m	Si	DO7
96	D1742,B,C							47pt%	4 0	42 3-51 7Ø	30 ⊘	300	50M		400m	Si#$	A1st
97#	DC4225							47p	4 0		60	300	10M			Si	C16f
98	FV1016,A,B,C,D							47p%	4 0	5 4$	65 ⊘	150	05G		40	Si#	A1ce
99	FV1116,A,B,C,D							47p%	4 0	6 35$	110 ⊘	150	50M		40	Si#	A1ce
100	G147,A,B							47p%	4 0		20	100 Ø	50M		50	Si$	A60k
101	G247,A,B							47p%	4 0		20	200 Ø	50M		50	Si$	A60k
102	G347,A,B							47p%	4 0		20	300 Ø	50M		50	Si$	A60k
103	KV114,A,B,C,D							47p%	4 0	13.2-110	80	50	50M		400m	Si	DO14
104	KV117,A,B,C,D							47p%	4 0	12 0-110	100	100	50M		400m	Si	DO14
105	KV122,A,B,C,D							47p%	4 0	12 0-110	100	75	50M		400m	Si	DO14
106	KV134							47p	4 0	22-110	25	50	50M		400m	Si	DO14
107	KV137							47p	4 0	16-110	50	100	50M		400m	Si	DO14
108	KV155							47p	4 0	13 2-110	80	100	50M		400m	Si	DO14

SYMBOLS AND CODES EXPLAINED IN INTERPRETER

10 VOLTAGE VARIABLE CAPACITORS & VARACTOR DIODES

IN ORDER OF (1) TYPICAL CAPACITANCE, (2) TEST VOLTAGE, and (3) TYPE No.

LINE No.	3 TYPE No	MINIMUM CUTOFF FREQUENCY (Corresponding to Type Numbers in previous column) (Hz)	(Hz)	(Hz)	(Hz)	(Hz)	(Hz)	TYP. CAP. 1 CAP. Cj (F)	2 at TEST VOLT (V)	CAPACITANCE RANGE (for V = 0 to PIV) Ø - at TEST VOLT. (pF)	PIV (V)	Q FACTOR MIN. Q	at TEST FREQ (Hz)	MAX. SER. RES. Rs (Ω)	MAX. DISS. @ 25°C (W)	DESCRIPTION MAT.	DWG. No.
1	KV161							47p	4.0	22-110	25	150	50M		400m	Si	DO14
2	KV202							47p	4.0	10 2-110	150	75	50M		400m	Si	DO14
3	KV203							47p	4 0	10.2-110	150	100	50M		400m	Si	DO14
4	KV302							47p	4 0	6.7,2.0V-200V$	200	50	50M		400m	Si	DO14
5	KV303							47p	4 0	6.7;2.0V-200V$	200	75	50M		400m	Si	DO14
6	MA4019G							47p	4.0	5 2$	110 ⍁	100	50M			Si#$	A31e
7	MA4273G							47p	4.0	37 6 - 56 4Ø	110	100	05G		.50	Si	A31e
8	MA45021							47pt	4.0	4 0;2.0-60V$	75 ⍁	100	50G		35	Si$	A31e
9	MA45043							47pt	4.0	2.7;2.0-30V$	35 ⍁	150	50G		.40	Si$	A31e
10	MC105,A,B							47p%	4.0	5.2;2.0-100V$	110 ⍁	150	50M		50	Si$#	A1ce
11	MC111,A,B							47p%	4.0	4.0;2 0-75V$	85 ⍁	150	50M		50	Si$#	A1ce
12	MC117,A,B							47p%	4.0	3.0;2.0-40V$	50 ⍁	150	50M		.50	Si$#	A1ce
13	MV47,A							47p	4 0	±9 4,±4 7Ø	20	7.0	.05G		25	Si	A109
14	MV47E	35G						47p	4.0	±9 4,±4 7Ø	50	7 0	.05G		.25	Si	A109
15	MV836							47p§	4 0	42 3-51.7Ø	30 ⍁	15	50M		40	Si	DO7
16	MV1642							47p§	4 0	42 3 - 51 7Ø	20 ⍁	200	05G		40	Si$	DO7
17	MV1742							47p§	4.0	42 3 - 51 7Ø	30 ⍁	300	05G		40	Si$	DO7
18	MV1742A							47p	4.0		30 ⍁	300	50M		400m	Si△#	DO7
19	MV2111							47p§	4 0	42 3-51.7Ø	30	150	50M		280m	Si	C103
20#	MV3047							47p	4 0	37.6-56.4Ø	20	7 0	50M		200m	Si*	DO7
21#	MV6114							47p	4.0	37.6-56.4Ø	50	50	50M		200m	Si*	DO7
22#	MVB6117							47p	4.0	37 6 - 56 4Ø	100 ⍁	100	50M		20	Si*	DO7
23#	MVE6117							47p	4 0	37 6-56.4Ø	100 ⍁	100	50M		20	Si*	S19k
24	PC114,A,B							47p%	4.0	7 4, 50-80V$	80 $	50	50M			Si*	DO14△
25	PC117,A,B							47p%	4.0	8 0,.50-100V$	100 $	100	50M			Si*	DO14△
26	PC122,A,B							47p%	4.0	8 0; 50-100V$	100 $	75	50M			Si*	DO14△
27	PC134,A,B							47p%	4.0	4.6,.50-30V$	30 $	50	50M			Si*	DO14△
28	PC137,A,B							47p%	4.0	6 0,.50Ø-50V$	50 $	100	50M			Si*	DO14△
29	PC0605A							47p§△	4.0		30 $	200	50M				DO7
30	PC0605B							47p§△	4.0		30 $	300	50M				DO7
31	PC0605C							47p§△	4 0		30 $	400	50M				DO7
32	PC0615A							47p§△	4 0		60 $	200	50M				DO7
33	PC0615B							47p§△	4.0		60 $	300	50M				DO7
34	PC0615C							47p§△	4 0		60 $	400	50M				DO7
35	PC0625A							47p§△	4.0		90 $	200	50M				DO7
36	PC0625B							47p§△	4.0		90 $	300	50M				DO7
37	PC0635A							47p§△	4.0		120 $	200	50M				DO7
38	PC0645A							47p§△	4.0		150 $	200	50M				DO7
39	PC704							47p△	4 0	2.4, 10-4.0V$	50 $	175	50M		50	Si*	DO14
40	PC705							47p△	4.0	2 4; 10-4.0V$	25 $	175	50M		50	Si*	DO14
41	PC709							47p△	4.0	2 4; 10-4 0V$	75 $	150	50M		50	Si*	DO14
42	PC710							47p△	4.0	2 4,.10-4.0V$	50 $	150	50M		50	Si*	DO14
43	PC711							47p△	4.0	2 4; 10-4.0V$	25 $	150	50M		50	Si*	DO14
44	PC714							47p△	4.0	2 4; 10-4 0V$	100 $	125	50M		50	Si*	DO14
45	PC715							47p△	4.0	2 4, 10-4 0V$	75 $	125	50M		50	Si*	DO14
46	PC716							47p△	4.0	2 4;.10-4 0V$	50 $	125	50M		50	Si*	DO14
47	PC717							47p△	4.0	2 4, 10-4.0V$	25 $	125	50M		.50	Si*	DO14
48	PC719							47p△	4.0	2 4, 10-4.0V$	125 $	100	50M		.50	Si*	DO14
49	PC720							47p△	4 0	2.4,.10-4 0V$	100 $	100	50M		50	Si*	DO14
50	PC721							47p△	4 0	2 4;.10-4 0V$	75 $	100	50M		50	Si*	DO14
51	PC722							47p△	4 0	2 4,.10-4 0V$	50 $	100	50M		50	Si*	DO14
52	PC723							47p△	4.0	2 4;.10-4 0V$	25 $	100	50M		50	Si*	DO14
53	PC724							47p△	4.0	2 4,.10-4.0V$	150 $	75	50M		.50	Si*	DO14
54	PC725							47p△	4.0	2.4;.10-4.0V$	125 $	75	50M		50	Si*	DO14
55	PC726							47p△	4.0	2 4;.10-4.0V$	100 $	75	50M		50	Si*	DO14
56	PC727							47p△	4.0	2 4;.10-4 0V$	75 $	75	50M		50	Si*	DO14
57	PC728							47p△	4 0	2.4;.10-4 0V$	50 $	75	50M		50	Si*	DO14
58	PC729							47p△	4.0	2 4; 10-4.0V$	25 $	75	50M		.50	Si*	DO14
59	PC730							47p△	4 0	2.4;.10-4.0V$	150 $	50	50M		50	Si*	DO14
60	PC731							47p△	4.0	2 4,.10-4 0V$	125 $	50	50M		50	Si*	DO14
61	PC732							47p△	4 0	2 4;.10-4 0V$	100 $	50	50M		50	Si*	DO14
62	PC733							47p△	4 0	2 4, 10-4 0V$	75 $	50	50M		50	Si*	DO14
63	PC734							47p△	4 0	2 4; 10-4 0V$	50 $	50	50M		50	Si*	DO14
64	PC735							47p△	4.0	2 4,.10-4 0V$	25 $	50	50M		50	Si*	DO14
65	PC2605A							47p△	4 0		30 $	200	50M				DO7
66	PC2605B							47p△	4 0		30 $	300	50M				DO7
67	PC2605C							47p△	4 0		30 $	400	50M				DO7
68	PC2615A							47p△	4 0		60 $	200	50M				DO7
69	PC2615B							47p△	4 0		60 $	300	50M				DO7
70	PC2615C							47p△	4.0		60 $	400	50M				DO7
71	PC2625A							47p§△	4 0		90 $	200	50M				DO7
72	PC2625B							47p§△	4 0		90 $	300	50M				DO7
73	PC2625C							47p§△	4 0		90 $	400	50M				DO7
74	PC2635A							47p§△	4 0		120 $	200	50M				DO7
75	PC2635B							47p§△	4.0		120 $	300	50M				DO7
76	PC2645A							47p§△	4 0		150 $	200	50M				DO7
77	PC2645B							47p§△	4.0		150 $	300	50M				DO7
78▼	PG147,A,B							47p%	4 0	4 6;2 0V-65V$	65 $	200	50M				DO7
79▼	PG247,A,B							47p%	4 0	4 5,2 0V-65V$	65 $	200	50M				DO7
80♦	PG347,A,B							47p%	4 0	4 0;2.0V-50V$	50 $	300	50M				DO7
81	PV001,A,B							47p%	4 0		100	100	50M		10		DO4
82	PV004,A,B							47p%	4 0		100	150	50M		10		DO4
83	PV007,A,B							47p%	4 0		150	100	50M		10		DO4
84	PV1435							47p§	4 0		120	400	500M				A2u
85	SQ1742,B,C							47p§%	4.0	42 3-51 7Ø	30 ⍁	500	50M		500m	Si#$	DO7
86	SQ5452A							47p%	4 0		30 ⍁	250	50M		400m		DO7
87	SQ5452B							47p%	4 0		30 ⍁	250	50M		400m		DO7
88	SQ5452C							47p%	4.0		30 ⍁	250	50M		400m		DO7
89	SQ5472A							47p%	4.0		30 ⍁	400	50M		400m		DO7
90	SQ5472B							47p%	4 0		30 ⍁	400	50M		400m		DO7
91	SQ5472C							47p%	4.0		30 ⍁	400	50M		400m		DO7
92#	SV77H							47p	4 0	33 - 61Ø	90			2.0	5 0	Si$	
93	V47⍁,A⍁,B⍁							47p	4 0	±9 4,4 7,2 35Ø	20	7 0	50M		50	Si*	DO14
94	V47%,A%,B%,C,D							47p%	4 0	20-120	25 $	15	50M		500m		A1st
95	V47E△,EA△,EB△,EC,ED							47p%	4.0	14-120	50 $	7 0	50M		500m	Si$	DO14
96	V47E⍁,EA⍁,EB⍁							47p%	4.0	±9 4;4 7,2.35Ø	50	7 0	50M		500m	Si*	DO14
97	V47EG							47p	4.0	120 - 14	50	10	.05G		40	Si$	DO7
98	V47G							47p	4 0	120 - 24	20	10	05G		40	Si$	DO7
99	V947△,A△,B△,C△,D△							47p%	4 0	20 - 120	25 $	15	05G		50	Si$	DO14
100	V947⍁,A⍁,B⍁							47p	4 0	±9.4,4.7,2.35Ø	20	15	50M		50	Si*	DO14
101	V947%,A%,B%,C%,D%							47p%	4.0	20-120	25 $	15	50M		500m		A1st
102	V947E△,EA△,EB△,EC,ED							47p%	4 0	14-120	50 $	7 0	50M		500m	Si$	DO14
103	V947E⍁,EA⍁,EB⍁							47p%	4 0	±9.4;4.7,2.35Ø	50	15	5 0M		500m	Si*	DO14
104	VA114							47p	4.0	110 - 13 2	80	50	.05G		.50	Si$	A131
105	VA117							47p	4 0	110 - 12	100	100	05G		.50	Si$	A131
106	VA122							47p	4 0	110 - 12	100	75	.05G		.50	Si$	A131
107	VA134							47p	4 0	110 - 22	25	50	05G		.50	Si$	A131
108	VA137							47p	4 0	110 - 16	50	100	.05G		.50	Si$	A131

SYMBOLS AND CODES EXPLAINED IN INTERPRETER

10 VOLTAGE VARIABLE CAPACITORS & VARACTOR DIODES

IN ORDER OF (1) TYPICAL CAPACITANCE, (2) TEST VOLTAGE, and (3) TYPE No.

LINE No.	3 TYPE No.	MINIMUM CUTOFF FREQUENCY (Corresponding to Type Numbers in previous column) (Hz)	(Hz)	(Hz)	(Hz)	(Hz)	(Hz)	TYP. CAP. 1 CAP. Cj (F)	2 at TEST VOLT (V)	CAPACITANCE RANGE (for V = 0 to PIV) Ø - at TEST VOLT. (pF)	PIV (V)	Q FACTOR MIN. Q	at TEST FREQ (Hz)	MAX. SER. RES. Rs (Ω)	MAX. DISS. @ 25°C (W)	DESCRIPTION MAT.	DWG. No.
1	VA155							47p	4 0	110 - 13 2	80	100	05G		.50	Si$	A131
2	VA161							47p	4.0	110 - 22	25	150	05G		.50	Si$	A131
3	VA202	37G						47p	4.0	110 - 10 2	150	75	.05G	.90	.50	Si$	A131
4	VA203	50G						47p	4.0	110 - 10.2	150	100	05G	70	.50	Si$	A131
5	VA302							47p	4.0	6.7;2 0-200V$	200	50	50M		.50	Si$	DO14△
6	VA303							47p	4 0	6.7;2.0-200V$	200	75	50M		.50	Si$	DO14△
7	VC47,A,B							47p%	4 0	17 - 120	40 $	10	05G				DO7
8	VC247,A,B							47p%	4 0	17 - 120	40 $	25	.05G				DO7
9	VC346,A,B							47p%	4.0	3.0;1V-25V$	25 $	50	.05G				DO7
10	VC347,A,B							47p%	4.0	4 0;2V-80V$	80 $	50	05G				DO7
11	VC446,A,B							47p%	4.0	3.0;1V-25V$	25 $	100	.05G				DO7
12	VC447,A,B							47p%	4.0	4.0;1V-50V$	50 $	100	.05G				DO7
13	VC448,A,B							47p%	4 0	4.0;2.0-80V$	100 $	100	50M				DO7
14	VC647,A,B							47p%	4.0	3.0;1V-25V$	40 $	200	.05G			Si	DO7
15	VC648,A,B							47p%	4 0	3.0;1V-25V$	40 $	300	.05G				DO7
16	VC829,A,B							47p%	4 0	24 - 120	20 $	7 0	05G				DO7
17	VC849,A,B							47p%	4 0	14 - 120	50 $	7 0	.05G				DO7
18	VG147,A,B,C,D							47p%	4.0	4.65;2.0-65V$	70	200	50M		.40	Si$	DO7
19	VG247,A,B,C,D							47p%	4.0	4.55;2.0-65V$	70	200	50M		.40	Si$	DO7
20	VG347,A,B,C,D							47p%	4.0	4.0;2.0-50V$	55	300	50M		40	Si$	DO7
21	VH47							47p△	4.0	120 - 24	20 $	7.0	.05G		.50	Si$	DO14
22	VH47E							47p△	4 0	120 - 14	50 $	7 0	05G		.50	Si$	DO14
23	VH114	20GØ						47p△	4 0	4.0$	80 $	50	50M	1.4	.50	Si$	DO14
24	VH117	40GØ						47p△	4 0	5.2$	100 $	100	50M	70	.50	Si$	DO14
25	VH122	30GØ						47p△	4 0	5.2$	100 $	100	50M	90	.50	Si$	DO14
26	VH134	10GØ						47p△	4.0	3 5$	25 $	50	50M	1 4	.50	Si$	DO14
27	VH137	25GØ						47p△	4.0	4.0$	50 $	100	50M	.70	50	Si$	DO14
28	VH172	40GØ						47p△	4 0	4.0$	80 $	100	50M	70	50	Si$	DO14
29	VH180	20GØ						47p△	4 0	4.0$	50 $	75	50M	.90	.50	Si$	DO14
30	VH188	30GØ						47p△	4.0	3.5$	25 $	150	50M	50	.50	Si$	DO14
31	VH210	50GØ						47p△	4 0	6.5$	150 $	100	50M	70	.50	Si$	DO14
32	VH211	35GØ						47p△	4 0	6 5$	150 $	6 0	50M	1.1	.50	Si$	DO14
33	VH230	40GØ						47p△	4 0	7.2$	200 $	50	50M	1.4	50	Si$	DO14
34	VH947							47p△	4.0	120 - 24	20 $	7.0	05G		50	Si$	DO14
35	VH947E							47p△	4 0	120 - 14	50 $	7.0	05G		50	Si$	DO14
36	VH7086							47p△	4.0	120 - 24	20 $	10	.05G		50	Si$	DO14
37	VH7098							47p△	4 0	120 - 14	50 $	10	.05G		.50	Si$	DO14
38	VM704,A,B,C,D							47p%	4 0	2 9,4 0-50V$	55	175			50	Si$	DO14
39	VM705,A,B,C,D							47p%	4 0	2.3;4.0-30V$	33	175			.50	Si$	DO14
40	VM709,A,B,C,D							47p%	4 0	3.6;4.0-75V$	83	150			.50	Si$	DO14
41	VM710,A,B,C,D							47p%	4 0	2 9;4.0-50V$	55	150			50	Si$	DO14
42	VM711,A,B,C,D							47p%	4.0	2.3;4 0-30V$	33	150			50	Si$	DO14
43	VM714,A,B,C,D							47p%	4 0	4.4;4.0-100V$	110	125			.50	Si$	DO14
44	VM715,A,B,C,D							47p%	4 0	3 6;4.0-75V$	83	125			.50	Si$	DO14
45	VM716,A,B,C,D							47p%	4.0	2.9;4.0-50V$	55	125			.50	Si$	DO14
46	VM717,A,B,C,D							47p%	4 0	2.3;4 0-30V$	33	125			50	Si$	DO14
47	VM718,A,B,C,D							47p%	4.0	5.1;4 0-150V$	165	100			50	Si$	DO14
48	VM719,A,B,C,D							47p%	4.0	4.8;4.0-125V$	138	100			.50	Si$	DO14
49	VM720,A,B,C,D							47p%	4.0	4 4;4 0-100V$	110	100			.50	Si$	DO14
50	VM721,A,B,C,D							47p%	4.0	3 6;4 0-75V$	83	100			.50	Si$	DO14
51	VM722,A,B,C,D							47p%	4 0	2.9;4.0-50V$	55	100			.50	Si$	DO14
52	VM723,A,B,C,D							47p%	4.0	2.3;4 0-25V$	33	100			.50	Si$	DO14
53	VM724,A,B,C,D							47p%	4 0	5.1,4 0-150V$	165	75			.50	Si$	DO14
54	VM725,A,B,C,D							47p%	4.0	4.8,4.0-125V$	138	75			.50	Si$	DO14
55	VM726,A,B,C,D							47p%	4.0	4 4;4.0-100V$	110	75			50	Si$	DO14
56	VM727,A,B,C,D							47p%	4 0	3 6;4.0-75V$	83	75			50	Si$	DO14
57	VM728,A,B,C,D							47p%	4 0	2 9;4 0-50V$	55	75			50	Si$	DO14
58	VM729,A,B,C,D							47p%	4 0	2 3;4 0-30V$	33	75			.50	Si$	DO14
59	VM730,A,B,C,D							47p%	4 0	5.1;4 0-150V$	165	50			50	Si$	DO14
60	VM731,A,B,C,D							47p%	4 0	4.8;4 0-125V$	138	50			.50	Si$	DO14
61	VM732,A,B,C,D							47p%	4 0	4 4;4.0-100V$	110	50			.50	Si$	DO14
62	VM733,A,B,C,D							47p%	4 0	3.6;4 0-75V$	83	50			50	Si$	DO14
63	VM734,A,B,C,D							47p%	4 0	2.9;4.0-50V$	55	50			50	Si$	DO14
64	VM735,A,B,C,D							47p%	4 0	2 3;4 0-30V$	33	50			.50	Si$	DO14
65	VVC217,A,B,C,D							47p%	4.0		20	7 0	50M			Si	DO7
66	VVC218,A,B,C,D							47p%	4 0		50	7 0	50M			Si	DO7
67	VVC414,A,B,C,D							47p%	4 0	±9 4Ø	25	50	.05G			Si	DO7
68	VVC416,A,B,C,D							47p%	4 0	±9.4Ø	50	100	05G			Si	DO7
69	VVC715,A,B,C,D							47p%	4 0		30	50	50M			Si	DO7
70	VVC716,A,B,C,D							47p%	4 0		80	50	50M			Si	DO7
71	VVC724,A,B,C,D							47p%	4 0		100	75	50M			Si	DO7
72	VVC725,A,B,C,D							47p%	4 0		100	100	50M			Si	DO7
73	VVC753,A,B,C,D							47p%	4 0		20	200	50M			Si	DO7
74	VVC754,A,B,C,D							47p%	4 0		30	15	50M			Si	DO7
75	VVC755,A,B,C,D							47p%	4.0		30	300	50M			Si	DO7
76	VVC829,A,B,C,D							47p%	4 0		40	10	50M			Si	DO7
77	VVC830,A,B,C,D							47p%	4 0		40	25	50M			Si	DO7
78	VVC875,A,B,C,D							47p%	4 0		30	100	50M			Si	DO7
79	VVC876,A,B,C,D							47p%	4 0		40	300	50M			Si	DO7
80	VVC877,A,B,C,D							47p%	4 0		60	100	50M			Si	DO7
81	VVC878,A,B,C,D							47p%	4 0		110	75	50M			Si	DO7
82	VVC943,A,B,C,D							47p%	4 0		20	10	50M			Si	DO7
83	VVC944,A,B,C,D							47p%	4 0		25	150	50M			Si	DO7
84	VVC945,A,B,C,D							47p%	4.0		50	10	50M			Si	DO7
85	VVC946,A,B,C,D							47p%	4 0		50	75	50M			Si	DO7
86	VVC947,A,B,C,D							47p%	4 0		80	100	50M			Si	DO7
87	VVC948,A,B,C,D							47p%	4.0		100	100	50M			Si	DO7
88	VVC949,A,B,C,D							47p%	4 0		150	60	50M			Si	DO7
89	VVC950,A,B,C,D							47p%	4 0		150	100	50M			Si	DO7
90	VVC1013,A,B,C,D							47p%	4 0		40	300	50M			Si	DO7
91#	ZC710Ø							47p†	4 0	3.2;2 0V-30V$	30	350	4 0		400m	Si	DO7
92	L8910							47p△	8 0	4 0;4.0-100V$	115	90	50M			Si$#	M190a
93	1N5148,A							48p△%	8 0	3.2,4 0-60V$	60 Ø	200	50M		40	Si	DO7
94	PH0306							50p	0 0	40 - 60Ø	90			1.2		Si	DO4
95	PH0309							50p	0.0	40 - 60Ø	120			1 2		Si	DO4
96	PH0312							50p	0 0	40 - 60Ø	150			1 2		Si	DO4
97	SD11G6							50p	0 0	50 - 100	6 0			1 0		Si	P3
98	SD12G6							50p	0.0	50 - 100	6.0			1.0		Si	F3a
99	SD22G6							50p	0.0	50 - 100	6.0			1.0		Si	F11
100	SD32G6							50p	0 0	50 - 100	6.0			1.0		Si	F21
101	SD42G6							50p	0 0	50 - 100	6.0			1.0		Si	F9a
102	SDGPG6							50p	0 0	50 - 100	6.0			1 0		Si	DO7
103	1N951							50p	4 0	12 - 120	80	7 0	05G		4 5	Si	DO7
104	1N951A							50p	4 0		80	7 0	50M			Si	DO7
105	1N955							50p	4 0	22 - 120	25	7 0	05G	5.0		Si	DO7
106	1N3551							50p	4 0	47-53Ø	11	30	50M		150mØ		DO7
107	1N3628							50p	4.0	25 - 125	20	30	05G			Si	DO7
108	SC5							50p	4 0		11		50M			Si	DO7
109#	MVB6118							50p	6 0	40-60Ø	220 Ø	60	50M		31	Si*	S19k
110#	MVE6118							50p	6.0	40-60Ø	220 Ø	60	50M		31	Si*	S19k

SYMBOLS AND CODES EXPLAINED IN INTERPRETER

10 VOLTAGE VARIABLE CAPACITORS & VARACTOR DIODES

IN ORDER OF (1) TYPICAL CAPACITANCE, (2) TEST VOLTAGE, and (3) TYPE No.

LINE No	3 TYPE No.	MINIMUM CUTOFF FREQUENCY (Corresponding to Type Numbers in previous column) (Hz)	(Hz)	(Hz)	(Hz)	(Hz)	(Hz)	TYP. CAP 1 CAP. Cj (F)	2 at TEST VOLT (V)	CAPACITANCE RANGE (for V = 0 to PIV) Ø - at TEST VOLT. (pF)	PIV (V)	Q FACTOR MIN Q	at TEST FREQ (Hz)	MAX. SER. RES. Rs (Ω)	MAX. DISS. @ 25°C (W)	DESCRIPTION MAT.	DWG. No.
1	SD11G48							54p	0 0	54 - 112	48			1 0		Si	P3
2	SD12G48							54p	0 0	54 - 112	48			1 0		Si	F3a
3	SD22G48							54p	0 0	54 - 112	48			1 0		Si	F11
4	SD32G48							54p	0 0	54 - 112	48			1 0		Si	F21
5	SD42G48							54p	0 0	54 - 112	48			1 0		Si	F9a
6#	BA111							55p	2.0	1.58;2 0 - 10V$	20 ⊘	200 Ø	30M	50 ⊘		Si△	DO7
7#	BA150△							55p	2 0	45 - 65	25	500 Ø	30M	25 ⊘	25	Si△	DO7
8	CBA111							55p	2 0	45-65Ø	30	100 Ø	30G	1 0	25	Si	A1ce
9	Q55⊘							55p	2.0	45 - 65	50	100	.03G	1 0		Si	DO7
10	1N3488							56p	4 0								
11	1N4797,A,B,C,D							56p%	4 0	2 42,0-4 0V$	15 $	15	50M		50	Si	DO14
12	1N4812,A,B,C,D							56p%	4 0	2 42;0-4 0V$	40 $	15	50M		50	Si	DO14
13	JAN1N4812A,B							56p%	4 0	2 42, 10-40V$	40 $	15	50M		50	Si	A1dd
14	1N5453							56p%	4 0	2 6;2V-30V$	30	200	50M		400m	Si	DO7
15	1N5453A							56p%	4 0	2 6,2V-30V$	30	200	50M		400m	Si	DO7
16	1N5453B							56p%	4 0	2 6,2V-30V$	30	200	50M		400m	Si	DO7
17	1N5453C							56p%	4 0	2 6;2V-30V$	30	200	50M		400m	Si	DO7
18	1N5453D							56p%	4 0	2 6,2V-30V$	30	200	50M		400m	Si	DO7
19	1N5473							56p%	4 0	2 9,2V-30V$	30	300	50M		400m	Si	DO7
20	1N5473A							56p%	4 0	2 9;2V-30V$	30	300	50M		400m	Si	DO7
21	1N5473B							56p%	4 0	2 9,2V-30V$	30	300	50M		400m	Si	DO7
22▼	JAN1N5473B							56p	4 0	53.2-58 8Ø	30 ⊘	600	50M		400m	Si	DO7
23	1N5473C							56p%	4 0	2 9;2V-30V$	30	300	50M		400m	Si	DO7
24	1N5473D							56p%	4 0	2 9;2V-30V$	30	300	50M		400m	Si	DO7
25	1N5692,A,B							56p%	4 0	3 95;2 0V-40V$	40 $	300	50M		400m	*	DO7
26	1N5707,A,B							56p%	4 0	3 60,4 0V-60V$	60 $	225	50M		400m	*	DO7
27▼	CV5056							56p	4 0	2 6,2.0V-30V$	30	150	50M		400m	Si	DO7
28	D1744,B,C							56p†%	4 0	50.4-61 6Ø	30 ⊘	300	50M		400m	Si#$	A1st
29#	DC4226							56p	4.0		60	300	10M			Si	C16f
30	MA45044							56p†	4 0	2 7,2.0-30V$	35 ⊘	125	50G		40	Si$	A31e
31	MV56,A							56p	4 0	±11 2,±5 6Ø	15	7 0	05G		25	Si	A109
32	MV56E	35G						56p	4 0	±11 2,±5 6Ø	40	7 0	05G		25	Si	A109
33	MV837							56p§	4 0	50.4-61 6Ø	30 ⊘	15	50M		40	Si	DO7
34	MV1644							56p§	4.0	50 4 - 61 6Ø	20 ⊘	150	05G		40	Si$	DO7
35	MV1744							56p§	4 0	50 4 - 61 6Ø	30 ⊘	300	05G		40	Si$	DO7
36	MV1744A							56p	4 0		30 ⊘	300	50M		400m	Si△#	DO7
37	MV2112							56p§	4 0	50.4-61 6Ø	30	150	50M		280m	Si	C103
38	SQ1744,B,C							56p§%	4 0	50 4-61 6Ø	30 ⊘	450	50M		500m	Si#$	DO7
39	SQ5453A							56p%	4 0		30 ⊘	200	50M		400m		DO7
40	SQ5453B							56p%	4 0		30 ⊘	200	50M		400m		DO7
41	SQ5453C							56p%	4 0		30 ⊘	200	50M		400m		DO7
42	SQ5473A							56p%	4.0		30 ⊘	300	50M		400m		DO7
43	SQ5473B							56p%	4 0		30 ⊘	300	50M		400m		DO7
44	SQ5473C							56p%	4 0		30 ⊘	300	50M		400m		DO7
45	USA55191/4							56p	4 0	46 - 66Ø	100	75	05G		15	Si	M273
46	V56⊘,A⊘,B⊘							56p	4 0	±11 2,5 6,2 8Ø	15	7 0	50M		.50	Si*	DO14
47	V56%,A%,B%,C,D							56p%	4 0	24 1-145	25 $	15	50M		500m		A1st
48	V56E△,EA△,EB△,EC,ED																
								56p%	4 0	20-145	40 $	7 0	50M		500m	Si$	DO14
49	V56E⊘,EA⊘,EB⊘							56p%	4 0	±11 2,5 6,2 8Ø	40	7 0	50M		500m	Si*	DO14
50	V56EG							56p	4 0	142 - 20	40	10	05G		40	Si$	DO7
51	V56G							56p	4 0	145 - 32	15	10	05G		40	Si$	DO7
52	V956△,A△,B△,C△,D△							56p%	4 0	24 1 - 145	25 $	15	05G		50	Si$	DO14
53	V956⊘,A⊘,B⊘							56p	4 0	±11 2,5 6,2 8Ø	15	15	50M		50	Si*	DO14
54	V956%,A%,B%,C%,D%							56p%	4 0	24 1-145	25 $	15	50M		500m		A1st
55	V956E△,EA△,EB△,EC,ED																
								56p%	4 0	20-145	40 $	7 0	50M		500m	Si$	DO14
56	V956E⊘,EA⊘,EB⊘							56p%	4 0	±11 2,5 6,2 8Ø	40	15	5 0M		500m	Si*	DO14
57	VC56,A,B							56p%	4 0	20 - 145	40 $	10	05G				DO7
58	VC256,A,B							56p%	4.0	20 - 145	40 $	25	05G				DO7
59	VC831,A,B							56p%	4 0	32 - 145	15 $	7 0	.05G				DO7
60	VC851,A,B							56p%	4 0	20 - 145	40 $	7 0	05G				DO7
61	VH56							56p△	4 0	145 - 32	15 $	7 0	05G		50	Si$	DO14
62	VH56E							56p△	4 0	145 - 20	40 $	7 0	05G		50	Si$	DO14
63	VH956							56p△	4 0	147 - 32	15 $	7 0	05G		50	Si$	DO14
64	VH956E							56p△	4 0	145 - 20	40 $	7 0	05G		.50	Si$	DO14
65	VH7060							56p△	4 0	145 - 20	40 $	10	05G		50	Si$	DO14
66	VH7087							56p△	4 0	145 - 32	15 $	10	05G		50	Si$	DO14
67	VVC219,A,B,C,D							56p	4 0		15	7 0	50M			Si	DO7
68	VVC220,A,B,C,D							56p	4 0		40	7 0	50M			Si	DO7
69	VVC756,A,B,C,D							56p	4 0		30	15	50M			Si	DO7
70	VVC757,A,B,C,D							56p	4 0		30	300	50M			Si	DO7
71	VVC758,A,B,C,D							56p	4 0		20	150	50M			Si	DO7
72	VVC831,A,B,C,D							56p	4 0		40	10	50M			Si	DO7
73	VVC832,A,B,C,D							56p	4 0		40	25	50M			Si	DO7
74	VVC951,A,B,C,D							56p	4 0		15	15	50M			Si	DO7
75	VVC1014,A,B,C,D							56p	4 0		30	300	50M			Si	DO7
76#	ZC711⊘							56p†	4 0	3 2;2 0V-30V$	30	300	4 0		400m	Si	DO7
77#	DC1017							57p	8 0		120	110	70M			Si	A52b
78	MA4060A							60p	0 0	40 - 80	90			1 5		Si	S4d
79	MA4061A							60p	0 0	40-80	140			1 5		Si	S4d
80	MA4062A							60p	0.0	40 - 80Ø	70				20	Si	S4d
81	MA4760A							60p	0 0	40 - 80Ø	90			1 5		Si	Z23
82	MA4761A							60p	0 0	40 - 80Ø	120			1 5		Si	Z23
83#	SV87D							60p	0 0	40 - 80Ø	90			1 5	20	Si	S201
84#	SV88D							60p	0.0	40 - 80Ø	140			1 5	20	Si	S201
85	SD11G12							62p	0.0	62 - 125	12			1 0		Si	P3
86	SD12G12							62p	0 0	62 - 125	12			1 0		Si	F3a
87	SD22G12							62p	0 0	62 - 125	12			1 0		Si	F11
88	SD32G12							62p	0 0	62 - 125	12			1 0		Si	F21
89	SD42G12							62p	0 0	62 - 125	12			1 0		Si	F9a
90	SDGPG12							62p	0.0	62 - 125	12			1 0		Si	DO7
91	VH165	37GØ						65p△	4 0	5 2$	100 $	90	50M	50	1 0	Si$	A1ej
92	VH166	28GØ						65p△	4 0	5 2$	100 $	90	50M	50	1 0	Si$	A1ej
93	VH173	40GØ						65p△	4 0	4 0$	80 $	100	50M	50	1 0	Si$	A1ej
94	VH174	20GØ						65p△	4 0	4 0$	80 $	50	50M	1 0	1 0	Si$	A1ej
95	VH181	25GØ						65p△	4 0	4 0$	50 $	100	50M	50	1 0	Si$	A1ej
96	VH182	15GØ						65p△	4 0	4 0$	50 $	50	50M	1 0	1 0	Si$	A1ej
97	VH189	30GØ						65p△	4 0	3 5$	25 $	150	50M	30	1 0	Si$	A1ej
98	VH190	10GØ						65p△	4 0	3 5$	25 $	50	50M	1 0	1 0	Si$	A1ej
99	VH212	50GØ						65p△	4 0	6 5$	150 $		50M	50	1 0	Si$	A1ej
100	VH213	35GØ						65p△	4 0	6 5$	150 $	60	50M	80	1.0	Si$	A1ej
101	VH231	40GØ						65p△	4 0	7 2$	200 $	50	50M	1 0	1 0	Si$	A1ej
102	VVC889,A,B,C,D							65p%	4 0		25	50	50M			Si	DO7
103	VVC890,A,B,C,D							65p%	4 0		25	150	50M			Si	DO7
104	VVC891,A,B,C,D							65p%	4 0		50	50	50M			Si	DO7
105	VVC892,A,B,C,D							65p%	4 0		50	100	50M			Si	DO7
106	VVC893,A,B,C,D							65p%	4 0		80	50	50M			Si	DO7
107	VVC894,A,B,C,D							65p%	4 0		80	100	50M			Si	DO7
108	VVC895,A,B,C,D							65p%	4 0		100	65	50M			Si	DO7

SYMBOLS AND CODES EXPLAINED IN INTERPRETER

10 VOLTAGE VARIABLE CAPACITORS & VARACTOR DIODES

IN ORDER OF (1) TYPICAL CAPACITANCE, (2) TEST VOLTAGE, and (3) TYPE No.

LINE No	3 TYPE No.	MINIMUM CUTOFF FREQUENCY (Corresponding to Type Numbers in previous column) (Hz)	(Hz)	(Hz)	(Hz)	(Hz)	(Hz)	TYP. CAP. 1 CAP. Cj (F)	2 at TEST VOLT (V)	CAPACITANCE RANGE (for V = 0 to PIV) Ø - at TEST VOLT (pF)	PIV (V)	Q FACTOR MIN. Q	at TEST FREQ (Hz)	MAX. SER. RES. Rs (Ω)	MAX. DISS. @ 25°C (W)	DESCRIPTION MAT.	DWG. No.
1	VVC896,A,B,C,D							65p%	4 0		100	90	50M			Si	DO7
2	VVC897,A,B,C,D							65p%	4 0		150	60	50M			Si	DO7
3	VVC898,A,B,C,D							65p%	4.0		150	100	50M			Si	DO7
4	1N4798,A,B,C,D							68p%	4 0	2 4,0-4 0V$	15 $	15	50M		50	Si	DO14
5	1N4813,A,B,C,D							68p%	4 0	2 4;0-4 0V$	30 $	15	50M		50	Si	DO14
6	JAN1N4813A,B							68p%	4.0	2 4; 10-40V$	30 $	15	50M		500m	Si	A1dd
7	1N5454							68p%	4 0	2 7,2V-30V$	30	175	50M		400m	Si	DO7
8	1N5454A							68p%	4 0	2 7,2V-30V$	30	175	50M		400m	Si	DO7
9	1N5454B							68p%	4 0	2 7,2V-30V$	30	175	50M		400m	Si	DO7
10	1N5454C							68p%	4.0	2.7,2V-30V$	30	175	50M		400m	Si	DO7
11	1N5454D							68p%	4 0	2 7,2V-30V$	30	175	50M		400m	Si	DO7
12	1N5474							68p%	4 0	2.9;2V-30V$	30	250	50M		400m	Si	DO7
13	1N5474A							68p%	4 0	2 9,2V-30V$	30	250	50M		400m	Si	DO7
14	1N5474B							68p%	4.0	2 9;2V-30V$	30	250	50M		400m	Si	DO7
15▼	JAN1N5474B							68p	4.0	64.6-71.4Ø	30 ☑	600	50M		400m	Si	DO7
16	1N5474C							68p%	4.0	2 9;2V-30V$	30	250	50M		400m	Si	DO7
17	1N5474D							68p%	4.0	2 9,2V-30V$	30	250	50M		400m	Si	DO7
18	1N5708,A,B							68p%	4 0	3 60;4 0V-60V$	60 $	175	50M		400m	*	DO7
19▼	CV5068							68p	4 0	2 6,2.0V-30V$	30	150	50M		400m	Si	DO7
20	D1746,B,C							68pt%	4 0	61 2-74 8Ø	30 ☑	250	50M		400m	Si#$	A1st
21#	DC4230							68p	4 0		60	250	10M			Si	C16f
22	G168,A,B							68p%	4 0		20	100 Ø	50M		50	Si$	A60k
23	G268,A,B							68p%	4 0		20	200 Ø	50M		.50	Si$	A60k
24	KV168							68p	4.0	17.5-160	100	75	50M		400m	Si	DO14
25	KV169							68p	4 0	23.5-160	50	50	50M		400m	Si	DO14
26	KV170							68p	4 0	19-160	80	75	50M		400m	Si	DO14
27	KV171							68p	4 0	23-160	50	100	50M		400m	Si	DO14
28	KV172							68p	4 0	32-160	25	100	50M		400m	Si	DO14
29	KV173							68p	4 0	32-160	25	75	50M		400m	Si	DO14
30	KV200							68p	4.0	14.8-160	150	75	50M		400m	Si	DO14
31	KV201							68p	4 0	14 8-160	150	50	50M		400m	Si	DO14
32	KV300							68p	4 0	6 8;2 0V-200V$	200	50	50M		400m	Si	DO14
33	KV301							68p	4 0	6 7;2.0V-200V$	200	75	50M		400m	Si	DO14
34	MA45045							68pt	4 0	2.7;2 0-30V$	35 ☑	100	50G		40	Si$	A31e
35	MV68,A							68p	4 0	±13.6,±6 8Ø	15	9 0	05G		25	Si	A109
36	MV838							68p§	4.0	61 2-74.8Ø	30 ☑	15	50M		40	Si	DO7
37	MV1646							68p§	4 0	61 2 - 74.8Ø	20 ☑	150	05G		40	Si$	DO7
38	MV1720							68p§	4 0	61 2-74 8Ø	30 ☑	500	50M		40	Si$	DO7
39	MV1746							68p§	4 0	61 2 - 74 8Ø	30 ☑	250	.05G		40	Si$	DO7
40	MV1746A							68p	4 0		30 ☑	500	50M		400m	Si△#	DO7
41	MV2113							68p§	4 0	61.2-74.8Ø	30	150	50M		280m	Si	C103
42	SQ1746,B,C							68p§%	4 0	61 2-74.8Ø	30 ☑	300	50M		500m	Si#$	DO7
43	SQ5454A							68p%	4 0		30 ☑	175	50M		400m		DO7
44	SQ5454B							68p%	4 0		30 ☑	175	50M		400m		DO7
45	SQ5454C							68p%	4.0		30 ☑	175	50M		400m		DO7
46	SQ5474A							68p%	4 0		30 ☑	250	50M		400m		DO7
47	SQ5474B							68p%	4 0		30 ☑	250	50M		400m		DO7
48	SQ5474C							68p%	4.0		30 ☑	250	50M		400m		DO7
49	V68△,A△,B△,C,D							68p%	4 0	29 1-175	25 $	15	50M		500m	Si$	DO14
50	V68Ø,A,B							68p	4 0	±13 6,6 8,3 4Ø	15	9 0	50M		50	Si*	DO14
51	V68E△,EA△,EB△,EC,ED																
								68p%	4 0	28-175	30 $	9.0	50M		500m	Si$	DO14
52	V68EØ,EAØ,EBØ							68p%	4 0	±13 6;6.8,3.4Ø	30	9 0	50M		500m	Si*	DO14
53	V68G							68p	4 0	175 - 39	15	12	05G		.40	Si$	DO7
54	V968△,A△,B△,C△,D△							68p%	4 0	29.1 - 175	25 $	15	05G		.50	Si$	DO14
55	V968Ø,AØ,BØ							68p	4 0	±13 6,6.8,3 4Ø	15	15	50M		50	Si*	DO14
56	V968E△,EA△,EB△,EC,ED																
								68p%	4 0	28-175	30 $	9 0	50M		500m	Si$	DO14
57	V968EØ,EAØ,EBØ							68p%	4.0	±13 6;6.8,3.4Ø	30	15	5.0M		500m	Si*	DO14
58	V982Ø,AØ,BØ							68p	4 0	±16.4,8.2,4 1Ø	15	15	50M		.50	Si*	DO14
59	VA168							68p	4 0	160 - 17 5	100	75	.05G		50	Si$	A131
60	VA169							68p	4.0	160 - 23 5	50	50	.05G		50	Si$	A131
61	VA170							68p	4.0	4.0$	80	75	.05G		50	Si$	A131
62	VA171							68p	4 0	4 0$	50	100	.05G		50	Si$	A131
63	VA172							68p	4 0	3 0$	25	100	05G		50	Si$	A131
64	VA173							68p	4 0	3 0$	25	75	05G		50	Si$	A131
65	VA200	37G						68p	4 0	160 - 14 8	150	75	05G	70	50	Si$	A131
66	VA201	25G						68p	4 0	160 - 14 8	150	50	05G	1 0	50	Si$	A131
67	VA300							68p	4 0	6.8,2.0-200V$	200	50	50M		50	Si$	DO14△
68	VA301							68p	4 0	6.7,2.0-200V$	200	75	50M		50	Si$	DO14△
69	VC68,A,B							68p%	4 0	31 - 175	25 $	10	.05G				DO7
70	VC268,A,B							68p%	4 0	31 - 175	25 $	25	05G				DO7
71	VC367,A,B							68p%	4 0	3 0,1V-25V$	25 $	50	.05G				DO7
72	VC467,A,B							68p%	4 0	3 0;1V-25V$	25 $	100	05G				DO7
73	VC832,A,B							68p%	4.0	39 - 175	15 $	9.0	.05G				DO7
74	VC852,A,B							68p%	4 0	175 - 29	30 $	9.0	05G			Si	DO7
75	VH68							68p△	4.0	175 - 39	15 $	9.0	.05G		.50	Si$	DO14
76	VH968							68p△	4 0	175 - 39	15 $	9.0	05G		50	Si$	DO14
77	VH7088							68p△	4 0	175 - 39	15 $	10	05G		50	Si$	DO14
78	VM816,A,B,C,D							68p%	4 0	2.9;4.0-50V$	55	125			50	Si$	DO14
79	VM817,A,B,C,D							68p%	4 0	2 3,4 0-30V$	33	125			50	Si$	DO14
80	VM821,A,B,C,D							68p%	4 0	3 6,4.0-75V$	83	100			.50	Si$	DO14
81	VM822,A,B,C,D							68p%	4.0	2 9,4 0-50V$	55	100			50	Si$	DO14
82	VM823,A,B,C,D							68p%	4 0	2 3;4.0-30V$	33	100			50	Si$	DO14
83	VM824,A,B,C,D							68p%	4 0	5.1;4 0-150V$	165	75			50	Si$	DO14
84	VM825,A,B,C,D							68p%	4 0	4.8;4.0-125V$	138	75			.50	Si$	DO14
85	VM826,A,B,C,D							68p%	4 0	4 4,4.0-100V$	110	75			50	Si$	DO14
86	VM827,A,B,C,D							68p%	4 0	3 6;4.0-75V$	83	75			.50	Si$	DO14
87	VM828,A,B,C,D							68p%	4 0	2 9;4 0-50V$	55	75			50	Si$	DO14
88	VM829,A,B,C,D							68p%	4 0	2.3;4.0-30V$	33	75			.50	Si$	DO14
89	VM830,A,B,C,D							68p%	4 0	5 1;4.0-150V$	165	50			50	Si$	DO14
90	VM831,A,B,C,D							68p%	4 0	4.8,4 0-125V$	138	50			50	Si$	DO14
91	VM832,A,B,C,D							68p%	4 0	4 4;4 0-100V$	110	50			50	Si$	DO14
92	VM833,A,B,C,D							68p%	4 0	3 6;4 0-75V$	83	50			50	Si$	DO14
93	VM834,A,B,C,D							68p%	4.0	2 9;4 0-50V$	55	50			50	Si$	DO14
94	VM835,A,B,C,D							68p%	4.0	2 3,4 0-30V$	33	50			50	Si$	DO14
95	VVC221,A,B,C,D							68p%	4 0		15	9.0	50M			Si	DO7
96	VVC717,A,B,C,D							68p%	4 0		30	9.0	50M			Si	DO7
97	VVC759,A,B,C,D							68p%	4 0		30	15	50M			Si	DO7
98	VVC760,A,B,C,D							68p%	4 0		30	500	50M			Si	DO7
99	VVC761,A,B,C,D							68p%	4 0		20	150	50M			Si	DO7
100	VVC762,A,B,C,D							68p%	4 0		30	250	50M			Si	DO7
101	VVC833,A,B,C,D							68p%	4 0		25	25	50M			Si	DO7
102	VVC834,A,B,C,D							68p%	4 0		30	50	50M			Si	DO7
103	VVC835,A,B,C,D							68p%	4 0		40	10	50M			Si	DO7
104	VVC879,A,B,C,D							68p%	4 0		30	100	50M			Si	DO7
105	VVC952,A,B,C,D							68p%	4 0		15	12	50M			Si	DO7
106	VVC1015,A,B,C,D							68p%	4 0		30	250	50M			Si	DO7
107#	ZC712Ø							68pt	4 0	3 2;2 0V-30V$	30	300	4 0		400m	Si	DO7
108	PH0305							70p	0 0	60 - 80Ø	90			.80		Si	DO4

SYMBOLS AND CODES EXPLAINED IN INTERPRETER

10 VOLTAGE VARIABLE CAPACITORS & VARACTOR DIODES

IN ORDER OF (1) TYPICAL CAPACITANCE, (2) TEST VOLTAGE, and (3) TYPE No.

LINE No.	3 TYPE No.	MINIMUM CUTOFF FREQUENCY (Corresponding to Type Numbers in previous column) (Hz)	(Hz)	(Hz)	(Hz)	(Hz)	(Hz)	TYP. CAP. 1 CAP. Cj (F)	2 at TEST VOLT (V)	CAPACITANCE RANGE (for V = 0 to PIV) Ø - at TEST VOLT. (pF)	PIV (V)	Q FACTOR MIN Q	at TEST FREQ (Hz)	MAX. SER. RES. Rs (Ω)	MAX. DISS. @ 25°C (W)	DESCRIPTION MAT.	DWG. No.
1	PH0308							70p	0 0	60 - 80Ø	120			80		Si	DO4
2	PH0311							70p	0 0	40 - 60Ø	150			80		Si	DO4
3	1N952							70p	4 0	20 - 170	60	7 0	.05G	2 1		Si	DO7
4	1N952A							70p	4 0		60	7 0	50M			Si	DO7
5	1N956							70p	4 0	32 - 170	25	7 0	05G	2 1		Si	DO7
6	1N3947							70p	4.0		9 0	9.0	50M			Si	DO14
7	SC7							70p	4 0		9 0	35	50M				DO7
8	1N3946							71p	4 0		90	7 0	50M		50	Si	DO14
9	SD11G18							75p	0 0	75 - 150	18			1 0		Si	P3
10	SD12G18							75p	0 0	75 - 150	18			1 0		Si	F3a
11	SD22G18							75p	0 0	75 - 150	18			1 0		Si	F11
12	SD32G18							75p	0 0	75 - 150	18			1.0		Si	F21
13	SD42G18							75p	0 0	75 - 150	18			1 0		Si	F9a
14	SDGPG18							75p	0 0	75 - 150	18			1.0		Si	DO7
15#	1S1765							80p	2.5	72 - 88	40	500	02G			Si#$	A1bw
16	1N4799,A,B,C,D							82p%	4 0	2 36,0-4.0V$	15 $	15	50M		.50	Si	DO14
17	1N4814,A,B,C,D							82p%	4 0	2 36;0-4 0V$	20 $	15	50M		50	Si	DO14
18	JAN1N4814A,B							82p%	4 0	2 36,.10-4 0V$	20 $	15	50M		50	Si	A1dd
19	1N5455							82p%	4 0	2 7;2V-30V$	30	175	50M		400m	Si	DO7
20	1N5455A							82p%	4 0	2 7,2V-30V$	30	175	50M		400m	Si	DO7
21	1N5455B							82p%	4.0	2 7,2V-30V$	30	175	50M		400m	Si	DO7
22	1N5455C							82p%	4 0	2 7,2V-30V$	30	175	50M		400m	Si	DO7
23	1N5455D							82p%	4 0	2 7,2V-30V$	30	175	50M		400m	Si	DO7
24	1N5475							82p%	4 0	2 9,2V-30V$	30	225	50M		400m	Si	DO7
25	1N5475A							82p%	4 0	2.9;2V-30V$	30	225	50M		400m	Si	DO7
26	1N5475B							82p%	4 0	2 9,2V-30V$	30	225	50M		400m	Si	DO7
27▼	JAN1N5475B							82p	4 0	77.9-86 1Ø	30 ⧄	600	50M		400m	Si	DO7
28	1N5475C							82p%	4 0	2 9,2V-30V$	30	225	50M		400m	Si	DO7
29	1N5475D							82p%	4 0	2 9,2V-30V$	30	225	50M		400m	Si	DO7
30	1N5709,A,B							82p%	4 0	3 60;4 0V-60V$	60 $	150	50M		400m	*	DO7
31▼	CV5082							82p	4 0	2 6,2 0V-30V$	30	100	50M		400m	Si	DO7
32	D1748,B,C							82p†%	4 0	73 8-90 2Ø	30 ⧄	250	50M		400m	Si#$	A1st
33#	DC4231							82p	4.0		60	250	10M			Si	C16f
34	MA45046							82p†	4 0	2 7,2.0-30V$	35 ⧄	75	50G		40	Si$	A31e
35	MV82,A							82p	4 0	±16 4,±8 2Ø	15	8 0	05G		25	Si	A109
36	MV839							82p§	4 0	73 8-90 2Ø	30 ⧄	10	50M		40	Si	DO7
37	MV1648							82p§	4 0	73 8 - 90.2Ø	20 ⧄	150	05G		.40	Si$	DO7
38	MV1748							82p§	4 0	73 8 - 90 2Ø	30 ⧄	250	05G		40	Si$	DO7
39	MV1748A							82p	4.0		30 ⧄	500	50M		400m	Si△#	DO7
40	MV2114							82p§	4 0	73 8-90 2Ø	30	100	50M		280m	Si	C103
41	SQ1748,B,C							82p§%	4 0	73 8-90 2Ø	30 ⧄	300	50M		500m	Si#$	DO7
42	SQ5455A							82p%	4 0		30 ⧄	175	50M		400m		DO7
43	SQ5455B							82p%	4 0		30 ⧄	175	50M		400m		DO7
44	SQ5455C							82p%	4 0		30 ⧄	175	50M		400m		DO7
45	SQ5475A							82p%	4 0		30 ⧄	225	50M		400m		DO7
46	SQ5475B							82p%	4 0		30 ⧄	225	50M		400m		DO7
47	SQ5475C							82p%	4 0		30 ⧄	225	50M		400m		DO7
48	V82△,A△,B△,C,D							82p%	4 0	35-210	25 $	12	50M		500m	Si$	DO14
49	V82⧄,A,B							82p	4 0	±16 4,8 2,4 1Ø	15	9 0	50M		50	Si*	DO14
50	V82E△,EA△,EB△,EC,ED							82p%	4 0	40-210	20 $	9 0	50M		500m	Si$	DO14
51	V82E⧄,EA⧄,EB⧄							82p%	4 0	±16 4,8 2,4 1Ø	20	9 0	50M		500m	Si*	DO14
52	V82G							82p	4 0	210 - 47	15	12	05G		40	Si$	DO7
53	V982△,A△,B△,C△,D△							82p%	4 0	35 - 210	25 $	12	05G		50	Si$	DO14
54	V982E△,EA△,EB△,EC,ED							82p%	4 0	40-210	20 $	9 0	50M		500m	Si$	DO14
55	V982E⧄,EA⧄,EB⧄							82p%	4 0	±16 4,8 2,4.1Ø	20	15	5 0M		500m	Si*	DO14
56	VC82,A,B							82p%	4 0	36 - 210	25 $	10	05G				DO7
57	VC282,A,B							82p%	4 0	36 - 210	25 $	25	05G				DO7
58	VC833,A,B							82p%	4.0	47 - 210	15 $	9 0	05G				DO7
59	VC853,A,B							82p%	4 0	210 - 41	20 $	9 0	05G			Si	DO7
60	VH82							82p△	4 0	210 - 47	15 $	9 0	05G		50	Si$	DO14
61	VH982							82p△	4.0	210 - 47	15 $	9 0	05G		50	Si$	DO14
62	VH7089							82p△	4 0	210 - 47	15 $	12	05G		50	Si$	DO14
63	VM923,A,B,C,D							82p%	4 0	2.3;4 0-30V$	33	100			50	Si$	DO14
64	VM926,A,B,C,D							82p%	4 0	4 4,4 0-100V$	110	75			50	Si$	DO14
65	VM927,A,B,C,D							82p%	4 0	3 6;4 0-75V$	83	75			50	Si$	DO14
66	VM928,A,B,C,D							82p%	4.0	2 9;4 0-50V$	55	75			50	Si$	DO14
67	VM929,A,B,C,D							82p%	4.0	2 3,4 0-30V$	33	75			50	Si$	DO14
68	VM932,A,B,C,D							82p%	4 0	4.4,4 0-100V$	110	50			50	Si$	DO14
69	VM933,A,B,C,D							82p%	4 0	3.6;4 0-75V$	83	50			50	Si$	DO14
70	VM934,A,B,C,D							82p%	4.0	2 9;4 0-50V$	55	50			50	Si$	DO14
71	VM935,A,B,C,D							82p%	4.0	2 3,4 0-30V$	33	50			50	Si$	DO14
72	VVC222,A,B,C,D							82p%	4 0		15	9 0	50M			Si	DO7
73	VVC718,A,B,C,D							82p%	4 0		20	9 0	50M			Si	DO7
74	VVC719,A,B,C,D							82p%	4.0		20	15	50M			Si	DO7
75	VVC763,A,B,C,D							82p%	4.0		30	10	50M			Si	DO7
76	VVC764,A,B,C,D							82p%	4.0		30	250	50M			Si	DO7
77	VVC765,A,B,C,D							82p%	4 0		20	150	50M			Si	DO7
78	VVC836,A,B,C,D							82p%	4 0		25	25	50M			Si	DO7
79	VVC837,A,B,C,D							82p%	4 0		40	10	50M			Si	DO7
80	VVC953,A,B,C,D							82p%	4 0		15	12	50M			Si	DO7
81	VVC1016,A,B,C,D							82p%	4 0		30	250	50M			Si	DO7
82#	ZC713⧄							82p†	4 0	3 2,2.0V-30V$	30	250	4 0		400m	Si	DO7
83▼	BV110	4 5G						84p	1 0	31 5-200	30			1 2	250m		
84	VVC838,A,B,C,D							99p%	4 0		15	25	50M			Si	DO7
85#	BA112							100p	2.0	80 - 120Ø	20					Si	DO7
86#	BAY35							100p	2.0	1.59;2.0 - 10V$	20 ⧄	100 Ø	30M	50 ⧄		Si△	DO7
87	CBA112							100p	2 0	80 - 120Ø	20					Si	DO7
88	1N953							100p	4 0	46 - 240	25	7 0	05G	1.5		Si	DO7
89	1N953A							100p	4 0		25	7 0	50M			Si	DO7
90	1N4800,A,B,C,D							100p%	4.0	2 33;0-4 0V$	15 $	15	50M		50	Si	DO14
91	1N4815,A,B,C,D							100p%	4 0	2.33;0-4.0V$	20 $	15	50M		50	Si	DO14
92	JAN1N4815A,B							100p%	4.0	2 33; 10-4 0V$	20 $	15	50M		50	Si	A1dd
93	1N5456							100p%	4.0	2 7,2V-30V$	30	175	50M		400m	Si	DO7
94	1N5456A							100p%	4.0	2 7;2V-30V$	30	175	50M		400m	Si	DO7
95	1N5456B							100p%	4.0	2 7,2V-30V$	30	175	50M		400m	Si	DO7
96	1N5456C							100p%	4 0	2 7;2V-30V$	30	175	50M		400m	Si	DO7
97	1N5456D							100p%	4 0	2.7;2V-30V$	30	175	50M		400m	Si	DO7
98	1N5476							100p%	4.0	2.9;2V-30V$	30	200	50M		400m	Si	DO7
99	1N5476A							100p%	4.0	2.9,2V-30V$	30	200	50M		400m	Si	DO7
100	1N5476B							100p%	4.0	2 9,2V-30V$	30	200	50M		400m	Si	DO7
101▼	JAN1N5476B							100p	4.0	95-105Ø	30 ⧄	600	50M		400m	Si	DO7
102	1N5476C							100p%	4 0	2 9,2V-30V$	30	200	50M		400m	Si	DO7
103	1N5476D							100p%	4.0	2 9;2V-30V$	30	200	50M		400m	Si	DO7
104	1N5695,A,B							100p%	4.0	3 95;2.0V-40V$	40 $	200	50M		400m	*	DO7
105	1N5710,A,B							100p%	4 0	3 60;4.0V-60V$	60 $	150	50M		400m	*	DO7
106▼	CV5100							100p	4 0	2 6,2 0V-30V$	30	100	50M		400m	Si	DO7
107	D1750,B,C							100p†%	4 0	90-110Ø	30 ⧄	250	50M		400m	Si#$	A1st
108#	DC4232							100p	4 0		60	200	10M			Si	C16f

SYMBOLS AND CODES EXPLAINED IN INTERPRETER

10 VOLTAGE VARIABLE CAPACITORS & VARACTOR DIODES

IN ORDER OF (1) TYPICAL CAPACITANCE, (2) TEST VOLTAGE, and (3) TYPE No.

LINE No	3 TYPE No.	MINIMUM CUTOFF FREQUENCY (Corresponding to Type Numbers in previous column) (Hz)	(Hz)	(Hz)	(Hz)	(Hz)	(Hz)	TYP. CAP. 1 CAP. Cj (F)	2 at TEST VOLT (V)	CAPACITANCE RANGE (for V = 0 to PIV) Ø - at TEST VOLT. (pF)	PIV (V)	Q FACTOR MIN. Q	at TEST FREQ (Hz)	MAX. SER. RES. Rs (Ω)	MAX. DISS. @ 25°C (W)	DESCRIPTION MAT.	DWG. No.
1	MA45047							100pt	4 0	2 7;2.0-30V$	35 ⊘	75	50G		.40	Si$	A31e
2	MV100,A							100p	4 0	±20,±10Ø	15	8.0	05G		25	Si	A109
3	MV840							100p§	4 0	90 - 110Ø	30 ⊘	10	.05G		.40	Si	DO7
4	MV1650							100p§	4 0	90 - 110Ø	20 ⊘	150	.05G		40	Si$	DO7
5	MV1750							100p§	4.0	90 - 110Ø	30 ⊘	250	05G		.40	Si$	DO7
6	MV1750A							100p	4 0		30 ⊘	500	50M		400m	Si△#	DO7
7	MV2115							100p§	4 0	90-110Ø	30	100	50M		280m	Si	C103
8#	MV3100							100p	4.0	80-120Ø	15	8.0	50M		200m	Si*	DO7
9	SQ1750,B,C							100p§%	4.0	90-110Ø	30 ⊘	300	50M		500m	Si#$	DO7
10	SQ5456A							100p%	4 0		30 ⊘	175	50M		400m		DO7
11	SQ5456B							100p%	4 0		30 ⊘	175	50M		400m		DO7
12	SQ5456C							100p%	4.0		30 ⊘	175	50M		400m		DO7
13	SQ5476A							100p%	4.0		30 ⊘	200	50M		400m		DO7
14	SQ5476B							100p%	4.0		30 ⊘	200	50M		400m		DO7
15	SQ5476C							100p%	4.0		30 ⊘	200	50M		400m		DO7
16	V100△,A△,B△,C,D							100p%	4.0	43.3-260	25 $	12	50M		500m	Si$	DO14
17	V100⊘,A,B							100p	4.0	±20,10,5 0Ø	15	8 0	05G		50	Si*	DO14
18	V100E△,EA△,EB△,EC,ED																
								100p%	4 0	50-260	20 $	8.0	50M		500m	Si$	DO14
19	V100E⊘,EA⊘,EB⊘							100p%	4 0	±20;10,5 0Ø	20	8.0	50M		500m	Si*	DO14
20	V100G							100p	4.0	260 - 57	15	10	.05G		.40	Si$	DO7
21	V900△,A△,B△,C,D							100p%	4 0	43.3-260	25 $	12	50M		500m	Si$	DO14
22	V900⊘,A⊘,B⊘							100p%	4 0	±20;10,5.0Ø	15	15	50M		500m	Si*	DO14
23	V900E△,EA△,EB△,EC,ED																
								100p%	4 0	50-260	20 $	8.0	50M		500m	Si$	DO14
24	V900E⊘,EA⊘,EB⊘							100p%	4.0	±20;10,5 0Ø	20	15	50M		500m	Si*	DO14
25	VC99,A,B							100p%	4.0	56 - 260	15 $	10	.05G				DO7
26	VC299,A,B							100p%	4.0	56 - 260	15 $	25	.05G				DO7
27	VC399,A,B							100p%	4.0	3.0;1V-25V$	25 $	50	.05G				DO7
28	VC834,A,B							100p%	4.0	57 - 260	15 $	9.0	.05G				DO7
29	VC854,A,B							100p%	4 0	260 - 50	20 $	8.0	.05G			Si	DO7
30	VH100							100p△	4 0	260 - 57	15 $	8 0	.05G		.50	Si$	DO14
31	VH300							100p△	4.0	5 2$	100 $	65	50M	.50	1.0	Si$	
32	VH301							100p△	4.0	5.2$	50 $	65	.05G	.50	1 0	Si$	
33	VH900							100p△	4.0	260 - 57	15 $	8.0	.05G		.50	Si$	DO14
34	VH7090							100p△	4.0	260 - 57	15 $	10	05G		.50	Si$	DO14
35	VM973,A,B,C,D							100p%	4.0	2 3;4.0-30V$	33	100			.50	Si$	DO14
36	VM978,A,B,C,D							100p%	4 0	2 9;4 0-50V$	55	75			50	Si$	DO14
37	VM979,A,B,C,D							100p%	4.0	2.3;4.0-30V$	33	75			.50	Si$	DO14
38	VM983,A,B,C,D							100p%	4.0	3.6;4.0-75V$	83	50			50	Si$	DO14
39	VM984,A,B,C,D							100p%	4.0	2 9;4 0-50V$	55	50			.50	Si$	DO14
40	VM985,A,B,C,D							100p%	4.0	2 3;4 0-30V$	33	50			.50	Si$	DO14
41	VVC223,A,B,C,D							100p%	4.0		15	8 0	50M			Si	DO7
42	VVC720,A,B,C,D							100p%	4.0		20	8 0	50M			Si	DO7
43	VVC766,A,B,C,D							100p%	4.0		30	10	50M			Si	DO7
44	VVC767,A,B,C,D							100p%	4.0		30	250	50M			Si	DO7
45	VVC768,A,B,C,D							100p%	4 0		20	150	50M			Si	DO7
46	VVC839,A,B,C,D							100p%	4.0		20	10	50M			Si	DO7
47	VVC880,A,B,C,D							100p%	4 0		15	9.0	50M			Si	DO7
48	VVC881,A,B,C,D							100p%	4.0		30	50	50M			Si	DO7
49	VVC899,A,B,C,D							100p%	4.0		50	65	50M			Si	DO7
50	VVC900,A,B,C,D							100p%	4.0		100	65	50M			Si	DO7
51	VVC954,A,B,C,D							100p%	4.0		15	10	50M			Si	DO7
52	VVC1017,A,B,C,D							100p%	4.0		30	250	50M			Si	DO7
53#	ZC714							100pt	4.0	3.2;2.0V-30V$	30	250	4.0		400m	Si	DO14
54	SC11							105p	4 0		6.0	35	50M				DO7
55	MA4060AA							120p	0.0	80 - 160	90			1.2		Si	S4d
56	MA4061AA							120p	0.0	80 - 160	140			1.2		Si	S4d
57	MA4098AA							120p	0 0	80 - 160Ø	140			1 2		Si*	Z23
58	MA4760AA							120p	0.0	80 - 160Ø	90			1.2		Si	Z23
59	MA4761AA							120p	0.0	80 - 160Ø	120			1.2		Si	Z23
60	MV1404							120p§	2.0	96-144Ø	12 ⊘	200	1.0M		.40	Si$	DO7
61#	DC4233							120p	4 0		60	200	10M			Si	C16f
62	MV1652							120pt	4.0	108 - 135Ø	20	250	.02G		40	Si$	DO14
63	MV2301							120p§	4.0	108-135	20	250	20M		500m	Si$	C132
64	VC112,A,B							120p%	4 0	68 - 310	15 $	25	.05G				DO7
65	VVC840,A,B,C,D							120p%	4.0		15	25	50M			Si	DO7
66#	DC1018							150p	4.0		115	200	25M			Si	M190g
67#	DC4234							150p	4.0		60	200	10M			Si	C16f
68#	DC4240							150p	4.0		60	1250	10M			Si	C126
69	MV1654							150pt	4 0	132 - 165Ø	20	250	.02G		40	Si$	DO14
70	MV2302							150p§	4 0	132-165	20	250	20M		500m	Si$	C132
71	SC15△							150p	4 0		6 0	35	50M				DO7
72	VC115,A,B							150p%	4.0	85 - 380	15 $	25	05G				DO7
73	VH302							150p△	4 0	5.2$ 100$	65		.05G	30	1.0	Si$	A1ej
74	VH303							150p△	4 0	5.2$	50 $	65	50M	30	1.0	Si$	A1ej
75	VVC841,A,B,C,D							150p%	4.0		15	25	50M			Si	DO7
76	VVC901,A,B,C,D							150p%	4 0		50	65	50M			Si	DO7
77	VVC902,A,B,C,D							150p%	4 0		100	65	50M			Si	DO7
78	1N5421							150p	8 0	5.8;4.0-200V$	200 §	200	25M		.25	Si	M190j
79	1N5714							150p	8.0	4.1;4.0V-100V$	200	200	25M		250m	Si$	A1du
80	L8913							150p△	8.0	4.0;4.0-100V$	115	180	25M			Si$#	M190b
81	PQ1150,A,B							150p%	8 0	2 5-2.6Ø	65 ⊘	150 Ø	25M			Si	
82	PQ2150,A,B							150p%	8 0	3.0-3.15Ø	95 ⊘	150 Ø	25M			Si	
83▼	BV100	2 3G						172p	1 0	55 8-400	30			1 2	250m		
84	MV1403							175p§	2 0	140-210Ø	12 ⊘	200	1 0M		.40	Si$	DO7
85#	BA163							180pØ	1.0	25;1.0V-10V$	14 ⊘	200	500k	1.5 ⊘		Si$#	DO7
86#	DC4235							180p	4 0		60					Si	C16f
87#	DC4241							180p	4 0		60	1250	10M			Si	C126
88	MV1656							180pt	4.0	162 - 198Ø	20	200	.02G		.40	Si$	DO14
89	MV2303							180p§	4 0	162-198	20	200	20M		500m	Si$	C132
90	VC118,A,B							180p%	4 0	120 - 450	10 $	25	.05G				DO7
91	VVC842,A,B,C,D							180p%	4.0		10	25	50M			Si	DO7
92	MV1658							200pt	4 0	180 - 220Ø	20	200	02G		40	Si$	DO14
93	MV2304							200p§	4 0	180-220	20	200	20M		500m	Si$	C132
94#	DC4242							220p	4 0		60	1000	10M			Si	C126
95	MV1660							220pt	4 0	198 - 242Ø	20	150	.02G		40	Si$	DO14
96	MV2305							220p§	4.0	198-242	20	150	20M		500m	Si$	C132
97	VC122,A,B							220p%	4.0	150 - 550	10 $	25	.05G				DO7
98	VVC843,A,B,C,D							220p%	4 0		10	25	50M			Si	DO7
99	MV1405							250p§	2.0	200-300Ø	12 ⊘	200	1.0M		40	Si$	DO7
100	MV1662							250pt	4.0	225 - 275Ø	15	150	02G		40	Si$	DO14
101	MV2306							250p§	4.0	225-275	20	150	20M		500m	Si$	C132
102	VH304							250p△	4.0	5.2$	100 $	65	50M	.20	1.0	Si$	DO14
103	VH305							250p△	4.0	5.2$	50 $	65	05G	20	1 0	Si$	A1ej
104	VVC903,A,B,C,D							250p%	4.0		50	65	50M			Si	DO7
105	VVC904,A,B,C,D							250p%	4 0		100	65	50M			Si	DO7
106	1N5422							250p	8.0	5 8;4 0-200V$	200 §	200	25M		25	Si	M190j
107	1N5715							250p	8 0	4 1,4 0V-100V$	200	200	25M		250m	Si$	A1du
108#	DC1019							250p	8.0		100	170	25M			Si	M190g

SYMBOLS AND CODES EXPLAINED IN INTERPRETER

10 VOLTAGE VARIABLE CAPACITORS & VARACTOR DIODES

IN ORDER OF (1) TYPICAL CAPACITANCE, (2) TEST VOLTAGE, and (3) TYPE No.

LINE No	3 TYPE No	MINIMUM CUTOFF FREQUENCY (Corresponding to Type Numbers in previous column) (Hz)	(Hz)	(Hz)	(Hz)	(Hz)	(Hz)	TYP. CAP. 1 CAP Cj (F)	2 at TEST VOLT (V)	CAPACITANCE RANGE (for V = 0 to PIV) Ø - at TEST VOLT (pF)	PIV (V)	Q FACTOR MIN. Q	at TEST FREQ (Hz)	MAX. SER RES. Rs (Ω)	MAX. DISS @ 25°C (W)	DESCRIPTION MAT.	DWG. No.
1	L8914							250pΔ	8 0	4 1,4 0-100V$	115	160	25M			Si$#	M190c
2	VA521							250p	8.0	5 0$	100	200	02G	13 ⧄	1 0	Si	A1du
3	VA522							250p	8 0	4 0$	80	200	02G	13 ⧄	1 0	Si	A1du
4	VA523							250p	8 0	4.0$	50	200	02G	13 ⧄	1 0	Si	A1du
5	VA524							250p	8 0	3 0$	25	200	02G	13 ⧄	1 0	Si	A1du
6#	DC4243							270p	4 0		60	1000	10M			Si	C126
7	MV1664							270pt	4 0	243 - 300Ø	15	100	02G		.40	Si$	DO14
8	MV2307							270p$	4 0	243-300	20	100	20M		500m	Si$	C132
9	VC127,A,B							270p%	4 0	180 - 660	10 $	25	.05G				DO7
10	VVC844,A,B,C,D							270p%	4 0		10	25	50M			Si	DO7
11	PQ1300,A,B							300p%	8.0	2 5-2 6Ø	65 ⧄	200 Ø	20M			Si	
12	PQ2300,A,B							300p%	8 0	3 0-3 15Ø	95 ⧄	200 Ø	20M			Si	
13#	DC4244							330p	4 0		60	750	10M			Si	C126
14	MV1666							330pt	4 0	297 - 363Ø	15	100	.02G		40	Si$	DO14
15	MV2308							330p$	4 0	297-363	20	100	20M		500m	Si$	C132
16	VC133,A,B							330p%	4 0	250-800	8 0 $	25	50M				DO7
17	VC533,B,C,D							330p%	4 0	145 - 840	30 $	25	05G				A1fz
18	VVC845,A,B,C,D							330p%	4 0		8 0	25	50M			Si	DO7
19	VVC882,A,B,C,D							330p%	4 0		30	25	50M			Si	DO7
20	VVC1018,A,B,C,D							330p%	4 0		30	25	50M			Si	DO7
21	VH306							350pΔ	4 0	5 2$	100 $	55	50M			Si	DO7
22	VH307							350pΔ	4 0	5.2$	50 $	55	05G	17	2 0	Si$	A83n
23	VVC905,A,B,C,D							350p%	4 0		50	55	50M			Si	DO7
24	VVC906,A,B,C,D							350p%	4 0		100	55	50M			Si	DO7
25#	DC4245							390p	4 0		60	750	10M			Si	C126
26	VC539,B,C,D							390p%	4 0	180 - 1010	25 $	25	05G				A1fz
27	VVC883,A,B,C,D							390p%	4 0		25	25	50M			Si	DO7
28	VC547,B,C,D							470p%	4 0	220 - 1200	25 $	25	05G				A1fz
29	VVC884,A,B,C,D							470p%	4 0		25	25	50M			Si	DO7
30	VH308							500pΔ	4 0	5 2$	100 $	45	50M	14	2 0	Si$	A83n
31	VH309							500pΔ	4 0	5 2$	50 $	45	05G	14	2 0	Si$	A83n
32	VVC907,A,B,C,D							500p%	4 0		50	45	50M			Si	DO7
33	VVC908,A,B,C,D							500p%	4 0		100	45	50M			Si	DO7
34	VVC1019,A,B,C,D							500p%	4 0		50	45	50M			Si	DO7
35	1N5423							500p	8 0	5 8;4 0-200V$	200 §	150	25M		25	Si	M190k
36	1N5424							500p	8 0	4 2;4 0-100V$	100 §	300	10M		25	Si	M190k
37	1N5716							500p	8 0	4 1,4 0V-100V$	200	150	25M		250m	Si$	A83cc
38	1N5717							500p	8 0	4 2;4 0V-100V$	100	300	10M		250m	Si$	A83cc
39	L8915							500pΔ	8 0	4 1;4 0-100V$	115	200	10M			Si$#	M190d
40	PQ1500,A,B							500p%	8 0	2 5-2 6Ø	65 ⧄	100 Ø	10M			Si	
41	PQ2500,A,B							500p%	8 0	3 0-3 15Ø	95 ⧄	100 Ø	10M			Si	
42	MV1401							550p$	1 0	468-633Ø	12 ⧄	200	1 0M		400m	Si$	DO14
43	VC556,B,C,D							560p%	4 0	330 - 1500	15 $	25	05G				A1fz
44	VVC885,A,B,C,D							560p	4 0		15	25	50M			Si	DO7
45	VA621							660p	4 0	5 0$	100	150	02G	09 ⧄	1 0	Si$	A1dv
46	VA622							660p	4.0	4 0$	80	150	02G	09 ⧄	1 0	Si$	A1dv
47	VA623							660p	4 0	4 0$	50	150	.02G	09 ⧄	1 0	Si$	A1dv
48	VA624							660p	4.0	3 0$	25	150	02G	09 ⧄	1 0	Si$	A1dv
49	VC568,B,C,D							680p%	4 0	400 - 1700	15 $	25	05G				A1fz
50	VVC886,A,B,C,D							680p%	4 0		15	25	50M			Si	DO7
51	P030004C,D,E,F	20G	40G	60G	80G			700p	6 0	40-1 0Ø	30				800m	Si	F27ad
52	VC582,B,C,D							820p%	4.0	520 - 2100	10 $	25	05G				A1fz
53	VVC887,A,B,C,D							820p	4 0		10	25	50M			Si	DO7
54	VA723							990p	4 0	4 0$	50	150	02G	06 ⧄	1 0	Si$	A1dv
55	VA724							990p	4 0	3 0$	25	150	02G	06 ⧄	1 0	Si$	A1dv
56	VC599,B,C,D							1 0n%	4 0	640 - 2500	10 $	25	05G				A1fz
57	VH310,A,B,C,D							1 0n%	4 0	5 2,2 0-50V$	50 $	25	50M	14	2 0	Si$	A83n
58	VH311,A,B,C,D							1 0n%	4 0	3 5,2 0-50V$	50 $	25	50M	14	2 0	Si$	A83n
59	VVC888,A,B,C,D							1 0n%	4 0		10	25	50M			Si	DO7
60	VVC909,A,B,C,D							1 0n%	4.0		25	100	50M			Si	DO7
61	VVC1020,A,B,C,D							1 0n%	4 0		25	100	50M			Si	DO7
62	1N5425							1 0n	8 0	4 2,4 0-100V$	100 §	200	10M		25	Si	M190m
63	1N5718							1 0n	8 0	4 2,4 0V-100V$	100	200	10M		250m	Si$	A83cc
64	VA823							1 3n	4 0	4 0$	50	100	.02G	06 ⧄	1 0	Si$	A1dv
65	VA824							1 3n	4 0	3 0$	25	100	02G	06 ⧄	1 0	Si$	A1dv
66	PH1203A,B-F	30G	40G	50G	60G	70G	80G	3 0	6 0	2 0-4 0Ø	6 0	⧄	10			Si	F58
67	PH1203G,H	90G	100G					3 0	6 0	2 0-4 0Ø	6.0	⧄	10			Si	F58
68	PH1213A,B-F	30G	40G	50G	60G	70G	80G	3 0	6 0	2 0-4 0Ø	15	⧄	10			Si	F58
69	PH1213G,H	90G	100G					3 0	6 0	2 0-4 0Ø	15	⧄	10			Si	F58
70	PH1223A,B-F	30G	40G	50G	60G	70G	80G	3 0	6 0	2 0-4 0Ø	24	⧄	10			Si	F58
71	PH1223G,H	90G	100G					3 0	6 0	2 0-4 0Ø	24	⧄	10			Si	F58
72	PH1233A,B-E	30G	40G	50G	60G	70G		3 0	6.0	2 0-4.0Ø	30	⧄	10			Si	F58
73	PH1243A,B-E	30G	40G	50G	60G	70G		3 0	6 0	2 0-4 0Ø	45	⧄	10			Si	F58
74	PH1253A,B-E	30G	40G	50G	60G	70G		3 0	6.0	2 0-4 0Ø	60	⧄	10			Si	F58
75	PH1263A,B-D	30G	40G	50G	60G			3 0	6 0	2 0-4 0Ø	90	⧄	10			Si	F58
76	PH1273A,B,C	30G	40G	50G				3 0	6 0	2 0-4 0Ø	120	⧄	10			Si	F58
77	PH1283A	30G						3 0	6 0	2 0-4 0Ø	150	⧄	10			Si	F58
78	PL0103A,B-F	30G	40G	50G	60G	70G	80G	3 0	6 0	2 0-4 0Ø	6 0	⧄	10			Si	F27d
79	PL0103G,H	90G	100G					3 0	6 0	2 0-4 0Ø	6 0	⧄	10			Si	F27d
80	PL0113A,B-F	30G	40G	50G	60G	70G	80G	3 0	6.0	2 0-4.0Ø	15	⧄	10			Si	F27d
81	PL0113G,H	90G	100G					3 0	6 0	2 0-4 0Ø	15	⧄	10			Si	F27d
82	PL0123A,B-F	30G	40G	50G	60G	70G	80G	3 0	6 0	2 0-4 0Ø	24	⧄	10			Si	F27d
83	PL0123G,H	90G	100G					3 0	6 0	2 0-4 0Ø	24	⧄	10			Si	F27d
84	PL0133A,B-E	30G	40G	50G	60G	70G		3 0	6 0	2 0-4 0Ø	30	⧄	10			Si	F27d
85	PL0143A,B-E	30G	40G	50G	60G	70G		3 0	6 0	2 0-4 0Ø	45	⧄	10			Si	F27d
86	PL0163A,B-D	30G	40G	50G	60G			3 0	6 0	2 0-4 0Ø	90	⧄	10			Si	F27d
87	PL0173A,B,C	30G	40G	50G				3 0	6 0	2 0-4 0Ø	120	⧄	10			Si	F27d
88	PL0183A	30G						3 0	6 0	2 0-4 0Ø	150	⧄	10			Si	F27d
89	PL0503A,B-F	30G	40G	50G	60G	70G	80G	3 0	6 0	2.0-4.0Ø	6 0	⧄	10			Si	F10p
90	PL0503G,H	90G	100G					3 0	6 0	2 0-4.0Ø	6 0	⧄	10			Si	F10p
91	PL0513A,B-F	30G	40G	50G	60G	70G	80G	3 0	6.0	2 0-4 0Ø	15	⧄	10			Si	F10p
92	PL0513G,H	90G	100G					3 0	6 0	2 0-4 0Ø	15	⧄	10			Si	F10p
93	PL0523A,B-F	30G	40G	50G	60G	70G	80G	3 0	6 0	2 0-4 0Ø	24	⧄	10			Si	F10p
94	PL0523G,H	90G	100G					3 0	6 0	2 0-4 0Ø	24	⧄	10			Si	F10p
95	PL0533A,B-E	30G	40G	50G	60G	70G		3 0	6 0	2 0-4 0Ø	30	⧄	10			Si	F10p
96	PL0553A,B-E	30G	40G	50G	60G	70G		3 0	6 0	2 0-4 0Ø	60	⧄	10			Si	F10p
97	PL0563A,B-D	30G	40G	50G	60G			3 0	6 0	2 0-4 0Ø	90	⧄	10			Si	F10p
98	PL0573A,B,C	30G	40G	50G				3 0	6 0	2 0-4.0Ø	120	⧄	10			Si	F10p
99	PL0583A	30G						3 0	6 0	2 0-4 0Ø	150	⧄	10			Si	F10p
100	IC53-5,A,B,C							3 3 %	4 0	6 5p-1 5p	50	50	50M		500m	Si	M214a
101	IC53-10,A,B,C							3 3 %	4 0	6.5p-1 5p	50	100	50M		500m	Si	M214a
102	IC53-20,A,B,C							3 3 %	4 0	6 5p-1 5p	50	200	50M		500m	Si	M214a
103	IC103-5,A,B,C							3 3 %	4 0	6 5p-1 0p	100	50	50M		500m	Si	M214a
104	IC103-10,A,B,C							3 3 %	4 0	6 5-1 0p	100	100	50M		500m	Si	M214a
105	IC103-20,A,B,C							3 3 %	4 0	6 5p-1 0p	100	200	50M		500m	Si	M214a
106	IC54-5,A,B,C							4 7 %	4.0	9 5p-2 0p	50	50	50M		500m	Si	M214a
107	IC54-10,A,B,C							4 7 %	4 0	9 5p-2 0p	50	100	50M		500m	Si	M214a
108	IC54-20,A,B,C							4 7 %	4 0	9 5p-2.0p	50	200	50M		500m	Si	M214a
109	IC104-5,A,B,C							4 7 %	4 0	9 5p-1 5p	100	50	50M		500m	Si	M214a
110	IC104-10,A,B,C							4 7 %	4 0	9 5-1 5p	100	100	50M		500m	Si	M214a

SYMBOLS AND CODES EXPLAINED IN INTERPRETER

10 VOLTAGE VARIABLE CAPACITORS & VARACTOR DIODES

IN ORDER OF (1) TYPICAL CAPACITANCE, (2) TEST VOLTAGE, and (3) TYPE No.

LINE No.	3 TYPE No.	MINIMUM CUTOFF FREQUENCY (Corresponding to Type Numbers in previous column) (Hz)	(Hz)	(Hz)	(Hz)	(Hz)	(Hz)	TYP. CAP. 1 CAP. Cj (F)	2 at TEST VOLT (V)	CAPACITANCE RANGE (for V = 0 to PIV) Ø - at TEST VOLT. (pF)	PIV (V)	Q FACTOR MIN. Q	at TEST FREQ (Hz)	MAX. SER. RES. Rs (Ω)	MAX. DISS. @ 25°C (W)	DESCRIPTION MAT.	DWG. No.
1	IC104-20,A,B,C							4.7 %	4 0	9.5p-1.5p	100	200	50M		500m	Si	M214a
2	IC106-5,A,B,C							6.0 %	4.0	14p-2.0p	100	50	50M		500m	Si	M214a
3	L4970							6 5 §	0.0	5.5;1.0V$	60 ⧄	1.1k	50M			Si#	F27ac
4	L4980							6 5 §	0.0	8;1.0V$	120 ⧄	500	50M			Si#	F27ac
5	IC56-5,A,B,C							6.8 %	4 0	14p-3.0p	50	50	50M		500m	Si	M214a
6	IC56-10,A,B,C							6.8 %	4.0	14p-3.0p	50	100	50M		500m	Si	M214a
7	IC56-20,A,B,C							6.8 %	4.0	14p-3.0p	50	200	50M		500m	Si	M214a
8	IC106-10,A,B,C							6.8 %	4.0	14p-2.0p	100	100	50M		500m	Si	M214a
9	IC106-20,A,B,C							6.8 %	4 0	14p-2.0p	100	200	50M		500m	Si	M214a
10▼	VVC1620,A,B,C,D							6 8	4 0	2.0-3.2;2.0V-20V$	20	300	50M		400m	Si	DO7
11	IC58-5,A,B,C							8.2 %	4.0	16p-3.5p	50	50	50M		500m	Si	M214a
12	IC58-10,A,B,C							8 2 %	4.0	16p-3.5p	50	100	50M		500m	Si	M214a
13	IC58-20,A,B,C							8.2 %	4.0	16p-3.5p	50	200	50M		500m	Si	M214a
14	IC108-5,A,B,C							8.2 %	4.0	10p-2.5p	100	50	50M		500m	Si	M214a
15	IC108-10,A,B,C							8.2 %	4.0	16p-2.5p	100	100	50M		500m	Si	M214a
16	IC108-20,A,B,C							8 2 %	4.0	16p-2.5p	100	200	50M		500m	Si	M214a
17▼	VVC1622,A,B,C,D							8 2	4 0	2.0-3.2;2.0V-20V$	20	300	50M		400m	Si	DO7
18	L4971							10 §	0.0	6;1.0V$	60 ⧄	1.0k	50M			Si#	F27ac
19	L4981							10 §	0.0	9;1.0V$	120 ⧄	500	50M			Si#	F27ac
20	IC510-5,A,B,C							10 %	4.0	20p-4 5p	50	50	50M		500m	Si	M214a
21	IC510-10,A,B,C							10 %	4.0	20p-4.5p	50	100	50M		500m	Si	M214a
22	IC510-20,A,B,C							10 %	4.0	20p-4.5p	50	200	50M		500m	Si	M214a
23	IC1010-5,A,B,C							10 %	4.0	20p-3.0p	100	50	50M		500m	Si	M214a
24	IC1010-10,A,B,C							10 %	4.0	20p-3.0p	100	100	50M		500m	Si	M214a
25	IC1010-20,A,B,C							10 %	4.0	20p-3.0p	100	200	50M		500m	Si	M214a
26▼	VVC1624,A,B,C,D							10	4.0	2.0-3.2;2.0V-20V$	20	300	50M		400m	Si	DO7
27	IC512-5,A,B,C							12 %	4.0	24p-5.0p	50	50	50M		500m	Si	M214a
28	IC512-10,A,B,C							12 %	4.0	24p-5.0p	50	100	50M		500m	Si	M214a
29	IC512-20,A,B,C							12 %	4 0	24p-5.0p	50	200	50M		500m	Si	M214a
30	IC1012-5,A,B,C							12 %	4.0	24p-3.5p	100	50	50M		500m	Si	M214a
31	IC1012-10,A,B,C							12 %	4.0	24p-3.5p	100	100	50M		500m	Si	M214a
32	IC1012-20,A,B,C							12 %	4.0	24p-3.5p	100	200	50M		500m	Si	M214a
33▼	VVC1626,A,B,C,D							12	4.0	2.0-3.2;2.0V-20V$	20	300	50M		400m	Si	DO7
34	L4972							14 §	0.0	6.5;1.0V$	60 ⧄	1.0k	50M			Si#	F27ac
35	L4982							14 §	0 0	9 5;1.0V$	120 ⧄	475	50M			Si#	F27ac
36	IC515-5,A,B,C							15 %	4.0	30p-6 0p	50	50	50M		500m	Si	M214a
37	IC515-10,A,B,C							15 %	4.0	30p-6.0p	50	100	50M		500m	Si	M214a
38	IC515-20,A,B,C							15 %	4.0	30p-6.0p	50	200	50M		500m	Si	M214a
39	IC1015-5,A,B,C							15 %	4.0	30p-4.5p	100	50	50M		500m	Si	M214a
40	IC1015-10,A,B,C							15 %	4.0	30p-4.5p	100	100	50M		500m	Si	M214a
41	IC1015-20,A,B,C							15 %	4.0	30p-4.5p	100	200	50M		500m	Si	M214a
42▼	VVC1628,A,B,C,D							15	4.0	2 0-3.2;2.0V-20V$	20	250	50M		400m	Si	DO7
43	L4973							18 §	0.0	7:1.0V$	60 ⧄	1.0k	50M			Si#	F27ac
44	L4983							18 §	0 0	10;1.0V$	120 ⧄	475	50M			Si#	F27ac
45	IC518-5,A,B,C							18 %	4.0	35p-7 5p	50	50	50M		500m	Si	M214a
46	IC518-10,A,B,C							18 %	4.0	35p-7 5p	50	100	50M		500m	Si	M214a
47	IC518-20,A,B,C							18 %	4.0	35p-7 5p	50	200	50M		500m	Si	M214a
48	IC1018-5,A,B,C							18 %	4.0	35p-5.5p	100	50	50M		500m	Si	M214a
49	IC1018-10,A,B,C							18 %	4.0	35p-5 5p	100	100	50M		500m	Si	M214a
50	IC1018-20,A,B,C							18 %	4.0	35p-5 5p	100	200	50M		500m	Si	M214a
51▼	VVC1630,A,B,C,D							18	4 0	2.0-3.2;2.0V-20V$	20	250	50M		400m	Si	DO7
52▼	VVC1041,A,B,C,D							20	4.0		10	100	50M		400m	Si	DO7
53▼	VVC1042,A,B,C,D							20	4 0		10	100	50M		400m	Si	DO7
54▼	VVC1043,A,B,C,D							20	4.0		10	100	50M		400m	Si	DO7
55▼	VVC1632,A,B,C,D							20	4.0	2 0-3 2,2.0V-20V$	20	250	50M		400m	Si	DO7
56	L4974							22 §	0 0	7;1.0V$	60 ⧄	900	50M			Si#	F27ac
57	L4984							22 §	0.0	10;1 0V$	120 ⧄	475	50M			Si#	F27ac
58	IC522-5,A,B,C							22 %	4 0	42p-9.5p	50	50	50M		500m	Si	M214a
59	IC522-10,A,B,C							22 %	4.0	42p-9.5p	50	100	50M		500m	Si	M214a
60	IC522-20,A,B,C							22 %	4 0	42p-9.5p	50	200	50M		500m	Si	M214a
61	IC1022-5,A,B,C							22 %	4 0	42p-6.5p	100	50	50M		500m	Si	M214a
62	IC1022-10,A,B,C							22 %	4 0	42p-6.5p	100	100	50M		500m	Si	M214a
63	IC1022-20,A,B,C							22 %	4.0	42p-6.5p	100	200	50M		500m	Si	M214a
64▼	VVC1634,A,B,C,D							22	4 0	2 0-3 2;2.0V-20V$	20	250	50M		400m	Si	DO7
65	L4975							26 §	0 0	7;1 0V$	60 ⧄	900	50M			Si#	F27ac
66	L4985							26 §	0.0	10;1.0V$	120 ⧄	450	50M			Si#	F27ac
67	IC527-5,A,B,C							27 %	4 0	52p-11p	50	50	50M		500m	Si	M214a
68	IC527-10,A,B,C							27 %	4 0	52p-11p	50	100	50M		500m	Si	M214a
69	IC527-20,A,B,C							27 %	4 0	52p-11p	50	200	50M		500m	Si	M214a
70	IC1027-5,A,B,C							27 %	4 0	52p-8.0p	100	50	50M		500m	Si	M214a
71	IC1027-10,A,B,C							27 %	4 0	52p-8.0p	100	100	50M		500m	Si	M214a
72	IC1027-20,A,B,C							27 %	4 0	52p-8.0p	100	200	50M		500m	Si	M214a
73▼	VVC1636,A,B,C,D							27	4 0	2 0-3 2;2 0V-20V$	20	200	50M		400m	Si	DO7
74	L4976							30 §	0.0	7;1.0V$	60 ⧄	900	50M			Si#	F27ac
75	L4986							30 §	0.0	10;1.0V$	120 ⧄	450	50M			Si#	F27ac
76▼	VVC1044,A,B,C,D							30	4 0		10	100	50M		400m	Si	DO7
77▼	VVC1045,A,B,C,D							30	4.0		10	100	50M		400m	Si	DO7
78▼	VVC1046,A,B,C,D							30	4.0		10	100	50M		400m	Si	DO7
79	IC533-5,A,B,C							33 %	4.0	65p-14p	50	50	50M		500m	Si	M214a
80	IC533-10,A,B,C							33 %	4 0	65p-14p	50	100	50M		500m	Si	M214a
81	IC533-20,A,B,C							33 %	4.0	65p-14p	50	200	50M		500m	Si	M214a
82	IC1033-5,A,B,C							33 %	4.0	65p-10p	100	50	50M		500m	Si	M214a
83	IC1033-10,A,B,C							33 %	4.0	65p-10p	100	100	50M		500m	Si	M214a
84	IC1033-20,A,B,C							33 %	4.0	65p-10p	100	200	50M		500m	Si	M214a
85	L4977							34 §	0.0	7;1.0V$	60 ⧄	800	50M			Si#	F27ac
86	L4987							34 §	0 0	10;1.0V$	120 ⧄	450	50M			Si#	F27ac
87	IC539-5,A,B,C							39 %	4.0	75p-16.5p	50	50	50M		500m	Si	M214a
88	IC539-10,A,B,C							39 %	4 0	75p-16.5p	50	100	50M		500m	Si	M214a
89	IC539-20,A,B,C							39 %	4 0	75p-16 5p	50	200	50M		500m	Si	M214a
90	IC1039-5,A,B,C							39 %	4.0	75p-11p	100	50	50M		500m	Si	M214a
91	IC1039-10,A,B,C							39 %	4 0	75p-11p	100	100	50M		500m	Si	M214a
92	IC1039-20,A,B,C							39 %	4.0	75p-11p	100	200	50M		500m	Si	M214a
93▼	VVC1640,A,B,C,D							39	4 0	2 0-3 2;2 0V-20V$	20	200	50M		400m	Si	DO7
94	L4978							40 §	0 0	7;1 0V$	60 ⧄	800	50M			Si#	F27ac
95	L4988							40 §	0 0	10;1.0V$	120 ⧄	450	50M			Si#	F27ac
96▼	VVC1047,A,B,C,D							40	4.0		10	100	50M		400m	Si	DO7
97▼	VVC1048,A,B,C,D							40	4.0		10	100	50M		400m	Si	DO7
98▼	VVC1049,A,B,C,D							40	4 0		10	100	50M		400m	Si	DO7
99▼	VVC1642,A,B,C,D							47	4 0	2.0-3.2;2 0V-20V$	20	200	50M		400m	Si	DO7
100▼	VVC1050,A,B,C,D							50	4 0		10	100	50M		400m	Si	DO7
101▼	VVC1051,A,B,C,D							50	4 0		10	100	50M		400m	Si	DO7
102▼	VVC1052,A,B,C,D							50	4 0		10	100	50M		400m	Si	DO7
103▼	VVC1644,A,B,C,D							56	4 0	2 0-3 2,2 0V-20V$	20	150	50M		400m	Si	DO7
104▼	VVC1646,A,B,C,D							68	4 0	2 0-3.2;2.0V-20V$	20	150	50M		400m	Si	DO7
105▼	VVC1648,A,B,C,D							82	4 0	2 0-3 2;2 0V-20V$	20	150	50M		400m	Si	DO7
106▼	VVC1650,A,B,C,D							100	4 0	2.0-3.2;2 0V-20V$	20	150	50M		400m	Si	DO7
107▼	VVC1021,A,B,C,D							330	4 0		25	50	50M		400m	Si	
108▼	VVC1022,A,B,C,D							330	4 0		25	200	50M		400m	Si	
109▼	VVC1023,A,B,C,D							330	4.0		100	15	50M		400m	Si	
110▼	VVC1024,A,B,C,D							330	4 0		100	200	50M		400m	Si	

SYMBOLS AND CODES EXPLAINED IN INTERPRETER

10 VOLTAGE VARIABLE CAPACITORS & VARACTOR DIODES

IN ORDER OF (1) TYPICAL CAPACITANCE, (2) TEST VOLTAGE, and (3) TYPE No.

LINE No	3 TYPE No.	MINIMUM CUTOFF FREQUENCY (Corresponding to Type Numbers in previous column) (Hz)	(Hz)	(Hz)	(Hz)	(Hz)	(Hz)	TYP. CAP. 1 CAP. Cj (F)	2 at TEST VOLT (V)	CAPACITANCE RANGE (for V = 0 to PIV) Ø - at TEST VOLT. (pF)	PIV (V)	Q FACTOR MIN. Q	at TEST FREQ (Hz)	MAX SER. RES. Rs (Ω)	MAX. DISS. @ 25°C (W)	DESCRIPTION MAT.	DWG. No.
1▼	VVC1025,A,B,C,D							330	4 0		25	50	50M		400m	Si	
2▼	VVC1026,A,B,C,D							330	4.0		25	200	50M		400m	Si	
3▼	VVC1027,A,B,C,D							330	4 0		100	15	50M		400m	Si	
4▼	VVC1028,A,B,C,D							330	4 0		100	200	50M		400m	Si	
5▼	VVC1029,A,B,C,D							1 0k	4 0		25	50	50M		400m	Si	
6▼	VVC1030,A,B,C,D							1 0k	4 0		25	200	50M		400m	Si	
7▼	VVC1031,A,B,C,D							1 0k	4 0		100	15	50M		400m	Si	
8▼	VVC1032,A,B,C,D							1 0k	4 0		100	200	50M		400m	Si	

SYMBOLS AND CODES EXPLAINED IN INTERPRETER

11. TUNNEL DIODES

IN ORDER OF (1) PEAK CURRENT, (2) MAXIMUM CAPACITANCE, and (3) TYPE No.

LINE No.	3 TYPE No.	PEAK CUR. 1 Ip (A)	TOLERANCE ± (A)	2 MAX. TOTAL CAP. (F)	MIN Ip/Iv	Vp (V)	Vv (V)	RESISTIVE Vf at Ip (V)	CUTOFF FREQ. (Hz)	SER. IND. Ls (H)	SER RES. Rs (Ω)	NEG. RES. -R (Ω)	NOISE VOLT. (V)	ABSOLUTE MAX. RATINGS FWD. CUR. (A)	DISS. @25°C (W)	THER. RES. °C/mW	MAX. TEMP (°C)	DESCRIPTION MAT.	DWG. No.
1	TD716		470u	50p	8 0	65m	350m	500m		800p	2 0	40		25m			100	Ge	A82
2	GBD025A	025m		1 0p	6 0			150m		30n				08m			100	Ge	F10r
3	GBD025B	025m		1 0p	6.0			150m		30n				.08m			100	Ge	M276
4	GBD025C	.025m		1 0p	6 0			150m		.50n				08m			100	Ge	A106e
5	GBD025D	.025m		1 0p	6 0			150m		10n				08m			100	Ge	F54d
6	ABD025A	025m		2 5p	12			300m		30n							100	GA	F10r
7	ABD025B	025m		2 5p	12			300m		.30n							100	GA	M276
8	ABD025C	025m		2 5p	12			300m		.50n							100	GA	A106e
9	ABD025D	025m		2 5p	12			300m		10n							100	GA	F54d
10	GBD050A	05m		1.0p	6 0			125m		.30n				15m			100	Ge	F10r
11	GBD050B	05m		1 0p	6 0			125m		30n				15m			100	Ge	M276
12	GBD050C	05m		1 0p	6 0			125m		.50n				15m			100	Ge	A106e
13	GBD050D	05m		1 0p	6 0			125m		10n				15m			100	Ge	F54d
14	ABD050A	05m		2 5p	12			260m		.30n							100	GA	F10r
15	ABD050B	05m		2 5p	12			260m		.30n							100	GA	M276
16	ABD050C	.05m		2.5p	12			260m		50n							100	GA	A106e
17	ABD050D	05m		2 5p	12			260m		10n							100	GA	F54d
18	GBD100A	10m		1 0p	6 0			120m		.30n				30m			100	Ge	F10r
19	GBD100B	10m		1 0p	6.0			120m		30n				30m			100	Ge	M276
20	GBD100C	10m		1 0p	6 0			120m		50n				30m			100	Ge	A106e
21	GBD100D	10m		1 0p	6 0			120m		.10n				.30m			100	Ge	F54d
22	ABD100A	10m		2 0p	12			225m		30n								GA	F10r
23	ABD100B	10m		2 0p	12			225m		30n								GA	M276
24	ABD100C	.10m		2 0p	12			225m		50n								GA	A106e
25	ABD100D	10m		2.0p	12			225m		10n								GA	F54d
26	1N2927	10m	01m	80p	2 5	75m	475m	600m			10			.50m			200S	Si	TO18
27	1N2927A	100u	2.0u	80p		75m△	475m△	1.0 △			10 ⊘			500u			200S		TO18
28	1N4393	10m	01m	80p	2 5	75m	475m	650m			10			25m			200S	Si	DO17
29	1N4393A	100u	5 0u	80p		70m△	475m△	1 0 △			10 ⊘			250u			200S	Si	DO17
30	1N4393B	100u	2 0u	80p		65m△	475m△	1.0 △			10 ⊘			250u			200S	Si	DO17
31	1N4396A	100u	5 0u	150p		75m△	500m△	1 0 △			2 0 ⊘			2 0m			200S	Si	DO17
32	1N4396B	100u	2 0u	150p		70m△	500m△	1.0 △			2.0 ⊘			2 0m			200S	Si	DO17
33	A1D207A	200u		700f						300p	15						100A	GS*	F10ab
34	A1D207E	200u		700f						100p	15						100A	GS*	F54e
35	A1E207E	200u		700f				105m		100p	8.5						100A	Ge*	F54e
36	A1D210A	200u		1 0p						300p	14						100A	GS*	F10ab
37	A1D210E	200u		1 0p						100p	14						100A	GS*	F54e
38	A1E210A	200u		1.0p				105m		300p	7 5						100A	Ge*	F10ab
39	A1E210E	200u		1 0p				105m		100p	7.5						100A	Ge*	F54e
40	A1D215A	200u		1 5p						300p	13						100A	GS*	F10ab
41	A1D215E	200u		1 5p						100p	13						100A	GS*	F54e
42	A1E215A	200u		1 5p				105m		300p	6 2						100A	Ge*	F10ab
43	A1E215E	200u		1 5p				105m		100p	6.2						100A	Ge*	F54e
44	A1D220A	200u		2 0p						300p	12						100A	GS*	F10ab
45	A1D220E	200u		2.0p						100p	12						100A	GS*	F54e
46	A1E220A	200u		2 0p				105m		300p	5 5						100A	Ge*	F10ab
47	A1E220E	200u		2 0p				105m		100p	5 5						100A	Ge*	F54e
48	1N4394	22m	02m	90p	2 5	80m	480m	660m			7 0			.50m			200S	Si	DO17
49	1N4394A	220u	11u	90p		72m△	480m△	1 0 △			7 0 ⊘			500u			200S	Si	DO17
50	1N4394B	220u	4 0u	90p		67m△	480m△	1 0 △			7 0 ⊘			500u			200S	Si	DO17
51	1N4397A	220u	11u	200p		77m△	510m△	1 0 △			2 0 ⊘			4.5m			200S	Si	DO17
52	1N4397B	220u	4 0u	200p		73m△	510m△	1 0 △			2.0 ⊘			4 5m			200S	Si	DO17
53	GBD250A	25m		1 0p	6 0			100m		30n				.75m				Ge	F10r
54	GBD250B	25m		1 0p	6 0			100m		30n				.75m				Ge	M276
55	GBD250C	25m		1 0p	6 0			100m		50n				75m				Ge	A106e
56	GBD250D	25m		1 0p	6 0			100m		10n				75m				Ge	F54d
57	ABD250A	25m		1 5p	12			200m		30n								GA	F10r
58	ABD250B	25m		1 5p	12			200m		30n								GA	M276
59	ABD250C	25m		1 5p	12			200m		50n								GA	A106e
60	ABD250D	250u		1 5p	12			200m		100p								GA	F54d
61	A1D307A	300u		700f						300p	15						100A	GS*	F10ab
62	A1D307E	300u		700f						100p	15						100A	GS*	F54e
63	A1E307A	300u		700f				95m		300p	9.5						100A	Ge*	F10ab
64	A1E307E	300u		700f				95m		100p	9 5						100A	Ge*	F54e
65	A1D310A	300u		1 0p						300p	14						100A	GS*	F10ab
66	A1D310E	300u		1.0p						100p	14						100A	GS*	F54e
67	A1E310A	300u		1 0p				95m		300p	8.5						100A	Ge*	F10ab
68	A1E310E	300u		1 0p				95m		100p	8 5						100A	Ge*	F54e
69	A1D315A	300u		1 5p						300p	13						100A	GS*	F10ab
70	A1D315E	300u		1 5p						100p	13						100A	GS*	F54e
71	A1E315A	300u		1 5p				95m		300p	7 5						100A	Ge*	F10ab
72	A1E315E	300u		1 5p				95m		100p	7 5						100A	Ge*	F54e
73	A1D320A	300u		2 0p						300p	13						100A	GS*	F10ab
74	A1D320E	300u		2 0p						100p	13						100A	GS*	F54e
75	A1E320A	300u		2 0p				95m		300p	7.0						100A	Ge*	F10ab
76	A1E320E	300u		2 0p				95m		100p	7 0						100A	Ge*	F54e
77	A1E407A	400u		700f				90m		300p	10						100A	Ge*	F10ab
78	A1E407E	400u		700f				90m		100p	10						100A	Ge*	F54e
79	A1E410A	400u		1 0p				90m		300p	9 0						100A	Ge*	F10ab
80	A1E410E	400u		1 0p				90m		100p	9 0						100A	Ge*	F54e
81	A1E415A	400u		1.5p				90m		300p	8 5						100A	Ge*	F10ab
82	A1E415E	400u		1 5p				90m		100p	8 5						100A	Ge*	F54e
83	A1E420A	400u		2 0p				90m		300p	8.0						100A	Ge*	F10ab
84	A1E420E	400u		2 0p				90m		100p	8 0						100A	Ge*	F54e
85	A1D407A	450u		700f						300p	16						100A	GS*	F10ab
86	A1D407E	450u		700f						100p	16						100A	GS*	F54e
87	A1D410A	450u		1 0p						300p	15						100A	GS*	F10ab
88	A1D410E	450u		1 0p						100p	15						100A	GS*	F54e
89	A1D415A	450u		1 5p						300p	14						100A	GS*	F10ab
90	A1D415E	450u		1 5p						100p	14						100A	GS*	F54e
91	A1D420A	450u		2 0p						300p	14						100A	GS*	F10ab
92	A1D420E	450u		2 0p						100p	14						100A	GS*	F54e
93	HT1077	470u	90u			67u					60			1 0m			125	Si	DO17
94	1N2928	47m	05m	100p	2 5	80m	490m	670m			3 0			2 5m			200S	Si	TO18
95	1N2928A	470u	10u	100p		80m△	490m△	1.0 △			3 0 ⊘			2 5m			200S		TO18
96	1N4395	47m	05m	100p	2.5	80m	490m	670m			3 0			1 0m			200S	Si	DO17
97	1N4395A	470u	20u	100p		74m△	490m△	1 0 △			3 0 ⊘			1 0m			200S	Si	DO17
98	1N4395B	470u	10u	100p		69m△	490m△	1 0 △			3 0 ⊘			1 0m			200S	Si	DO17
99	A0500.5A	500u	25u	1 0p	12	100m	500m	950m		300p								GA	F10r
100	A0500.5B	500u	25u	1 0p	12	100m	500m	950m		300p								GA	M276
101	A0500.5C	500u	25u	1 0p	12	100m	500m	950m		500p								GA	A106e
102	A0500 5D	500u	25u	1 0p	12	100m	500m	950m		100p								GA	F54d
103	G0500 5A	500u	25u	1 0p	6 0	50m	320m	460m		300p				1 0m				Ge	F10r
104	G0500 5B	500u	25u	1 0p	6 0	50m	320m	460m		300p				1 0m				Ge	M276
105	G0500 5C	500u	25u	1 0p	6 0	50m	320m	460m		500p				1 0m				Ge	A106e
106	G0500 5D	500u	25u	1 0p	6 0	50m	320m	460m		100p				1 0m				Ge	F54d
107	A0000 5A	50m	05m	2.0p	12	100m	500m	950m		.30n				1 0m				GA	F10r
108	A0000 5B	50m	05m	2 0p	12	100m	500m	950m		30n				1 0m				GA	M276
109	A0000 5C	50m	05m	2 0p	12	100m	500m	950m		50n				1 0m				GA	A106e
110	A0000.5D	50m	05m	2 0p	12	100m	500m	950m		10n				1 0m				GA	F54d

SYMBOLS AND CODES EXPLAINED IN INTERPRETER

11. TUNNEL DIODES

IN ORDER OF (1) PEAK CURRENT, (2) MAXIMUM CAPACITANCE, and (3) TYPE No.

LINE No	3 TYPE No	PEAK CUR. 1 Ip (A)	TOLERANCE ± (A)	2 MAX. TOTAL CAP. (F)	MIN Ip/Iv	Vp (V)	Vv (V)	RESISTIVE Vf at Ip (V)	CUTOFF FREQ. (Hz)	SER. IND. Ls (H)	SER RES. Rs (Ω)	NEG. RES. -R (Ω)	NOISE VOLT. (V)	ABSOLUTE MAX. RATINGS FWD. CUR. (A)	DISS @25°C (W)	THER RES. °C/mW	MAX TEMP (°C)	DESCRIPTION MAT	DWG. No.
1	G0000 5A	50m	.05m	2 0p	6 0	50m	320m	460m		30n				1 0m				Ge	F10r
2	G0000 5B	50m	05m	2 0p	6 0	50m	320m	460m		30n				1 0m				Ge	M276
3	G0000 5C	50m	.05m	2 0p	6 0	50m	320m	460m		50n				1 0m				Ge	A106e
4	G0000.5D	50m	05m	2 0p	6 0	50m	320m	460m		10n				1 0m				Ge	F54d
5	A1R001A	500u	10	2 5p	6 0	55m	325m	465m		300p							100A	Ge*	F10ab
6	STD629	500u	25u	3 5pØ	7 3	65m	350m	500m	1 8G	500p	2 5			2 5m			100S	Ge	A82
7	TD9	.50m	.05m	5 0p	4 5	65m	350m	500m	2 5G	50n	2.5	250		2 5m			100S	Ge	A82a
8	TD710	50m	.05m	5 0p	8 0	65m	350m	500m		80n	2.5	250		2 5m			100S	Ge	A82
9	A1E507A	550u		700f				85m		300p	10						100A	Ge*	F10ab
10	A1E507E	550u		700f				85m		100p	10						100A	Ge*	F54e
11	A1E510A	550u		1 0p				85m		300p	9 5						100A	Ge*	F10ab
12	A1E510E	550u		1 0p				85m		100p	9 5						100A	Ge*	F54e
13	A1E515A	550u		1 5p				85m		300p	9 0						100A	Ge*	F10ab
14	A1E515E	550u		1 5p				85m		100p	9.0						100A	Ge*	F54e
15	A1E520A	550u		2 0p				85m		300p	8.5						100A	Ge*	F10ab
16	A1E520E	550u		2 0p				85m		100p	8.5						100A	Ge*	F54e
17	A1D607A	600u		700f						300p	17						100A	GS*	F10ab
18	A1D607E	600u		700f						100p	17						100A	GS*	F54e
19	A1D610A	600u		1 0p						300p	16						100A	GS*	F10ab
20	A1D610E	600u		1 0p						100p	16						100A	GS*	F54e
21	A1D615A	600u		1 5p						300p	15						100A	GS*	F10ab
22	A1D615E	600u		1 5p						100p	15						100A	GS*	F54e
23	A1D620A	600u		2 0p						300p	15						100A	GS*	F10ab
24	A1D620E	600u		2.0p						100p	15						100A	GS*	F54e
25	G50X01D	1.0m	.10m	20p	6 0				50GØ	10n	7 0	90						Ge	F54d
26	A1B230D	1 0m		300fØ					30MØ	100p	11	70 ⧄					100A	GS*	F10aa
27	A1B230E	1 0m		300fØ					30MØ	100p	11	70 ⧄					100A	GS*	F54e
28	G40001D	1 0m	10m	30p	6 0				40GØ	05n	6 0	85						Ge	F54d
29	A1B225D	1 0m		370fØ					25MØ	100p	10	70 ⧄					100A	GS*	F10aa
30	A1B225E	1 0m		370fØ					25MØ	100p	10	70 ⧄					100A	GS*	F54e
31	G30001A	1 0m	10m	40p	6 0				30GØ	05n	5 0	80						Ge	F10r
32	G30001D	1.0m	10m	40p	6 0				30GØ	.05n	5.0	80						Ge	F54d
33	A1B220A	1.0m		600fØ					20MØ	300p	9.0	70 ⧄					100A	GS*	F10ab
34	A1B220D	1 0m		600fØ					20MØ	100p	9.0	70 ⧄					100A	GS*	F10aa
35	A1B220E	1 0m		600fØ					20MØ	100p	9 0	70 ⧄					100A	GS*	F54e
36	G25X01A	1 0m	10m	60p	6 0				25GØ	.30n	5 0	75						Ge	F10r
37	G25X01D	1.0m	10m	60p	6 0				25GØ	10n	5.0	75						Ge	F54d
38	A1B215A	1 0m		750fØ					15MØ	300p	7 0	70 ⧄					100A	GS*	F10ab
39	A1B215D	1 0m		750fØ					15MØ	100p	7 0	70 ⧄					100A	GS*	F10aa
40	A1B215E	1 0m		750fØ					15MØ	100p	7 0	70 ⧄					100A	GS*	F54e
41	G20001A	1 0m	10m	80p	6 0				20GØ	.30n	4 0	75						Ge	F10r
42	G20001D	1 0m	10m	80p	6.0				20GØ	10n	4 0	75						Ge	F54d
43	MS1512A	1 0m		80pØ					20GØ	.30n	7 0	120	95m§				100S	GS	F10h
44	MS1564A	1 0m		.80pØ					20GØ	10n	7 0	120	95m§				100S	GS	F54
45	G15001A	1 0m	.10m	90p	6.0				15GØ	30n	3 0	75						Ge	F10r
46	G15001D	1.0m	.10m	.90p	6.0				15GØ	10n	3.0	75						Ge	F54d
47	MS1505A	1 0m		1 0pØ					8 0GØ	30n	5.0	120	.90m§				100S	GS	F10h
48	MS1508A	1.0m		1 0pØ					15GØ	.30n	7.0	120	.95m§				100S	GS	F10h
49	MS1563A	1 0m		1.0pØ					15GØ	10n	7.0	120	.95m§				100S	GS	F54
50	MS1507A	1 0m		1 2pØ					12GØ	.30n	6 0	120	90m§				100S	GS	F10h
51	MS1562A	1.0m		1.2pØ					12GØ	.10n	6 0	120	90m§				100S	GS	F54
52	G10001A	1 0m	10m	1 3p	6.0				10GØ	.30n	3.0	70						Ge	F10r
53	G10001D	1 0m	10m	1.3p	6 0				10GØ	10n	3 0	70						Ge	F54d
54	A1B210A	1 0m		1.35pØ					10MØ	300p	5 0	70 ⧄					100A	GS*	F10ab
55	A1B210D	1 0m		1.35pØ					10MØ	100p	5 0	70 ⧄					100A	GS*	F10aa
56	A1B210E	1 0m		1.35pØ					10MØ	100p	5 0	70 ⧄					100A	GS*	F54e
57	A05001A	1 0m	05m	2 0p	12	115m	510m	1.0		30n				2 0m				GA	F10r
58	A05001B	1 0m	.05m	2.0p	12	115m	510m	1.0		30n				2 0m				GA	M276
59	A05001C	1 0m	.05m	2.0p	12	115m	510m	1.0		50n				2.0m				GA	A106e
60	A05001D	1 0m	.05m	2.0p	12	115m	510m	1.0		10n				2 0m				GA	F54d
61	G05001A	1 0m	.05m	2.0p	6.0	60m	340m	460m		30n				2 0m				Ge	F10r
62	G05001B	1 0m	05m	2 0p	6 0	60m	340m	460m		30n				2 0m				Ge	M276
63	G05001C	1 0m	05m	2.0p	6.0	60m	340m	460m		.50n				2 0m				Ge	A106e
64	G05001D	1.0m	.05m	2.0p	6.0	60m	340m	460m		10n				2 0m				Ge	F54d
65	MS1561A	1 0m		2 0pØ					8.0GØ	.10n	5.0	120	90m§				100S	GS	F54
66	MS1504A	1.0m		2.5pØ					6 0GØ	.30n	4.0	120	85m§				100S	GS	F10h
67	MS1560A	1 0m		2 5pØ					6 0GØ	.10n	4 0	120	85m§				100S	GS	F54
68	A00001A	1 0m	.10m	3.0p	12	115m	510m	1.0		.30n				2 0m				GA	F10r
69	A00001B	1.0m	.10m	3.0p	12	115m	510m	1.0		30n				2 0m				GA	M276
70	A00001C	1.0m	10m	3 0p	12	115m	510m	1.0		.50n				2 0m				GA	A106e
71	A00001D	1.0m	10m	3.0p	12	115m	510m	1.0		10n				2.0m				GA	F54d
72	A1B205A	1 0m		3.0pØ					5 0MØ	300p	4 0	70 ⧄					100A	GS*	F10ab
73	A1B205D	1 0m		3 0pØ					5 0MØ	100p	4.0	70 ⧄					100A	GS*	F10aa
74	A1B205E	1.0m		3.0pØ					5.0MØ	100p	4 0	70 ⧄					100A	GS*	F54e
75	G00001A	1.0m	.10m	3 0p	6.0	60m	340m	460m		.30n				2.0m				Ge	F10r
76	G00001B	1 0m	.10m	3.0p	6.0	60m	340m	460m		30n				2 0m				Ge	M276
77	G00001C	1.0m	.10m	3 0p	6 0	60m	340m	460m		50n				2 0m				Ge	A106e
78	G00001D	1.0m	.10m	3.0p	6.0	60m	340m	460m		.10n				2 0m				Ge	F54d
79	G50001A	1.0m	.10m	3.0p	6.0				5.0GØ	30n	2.0	70						Ge	F10r
80	G50001D	1 0m	.10m	3 0p	6.0				5.0GØ	.10n	2.0	70						Ge	F54d
81	G50001F	1.0m	.10m	3 0p	6 0				5.0GØ	.05n	2.0	70						Ge	M277
82	A1H003A	1.0m	10	3.5p	10	120m	515m	1.0k		300p							100A	GS*	F10ab
83	1N3713	1.0m	25u	5.0p	7 0	65m	355m	510m	3 2G	500p	1.7	118		5.0m			100S	Ge	A82a
84	JAN1N3713	1.0m	25u	5.0p		72mΔ	395mΔ	535mΔ			4.0 ⧄	135 ⧄		5.0m			100A	Ge	A82a
85	MS233A	1 0m		5.0pØ					3 0GØ	30n	3.0	120	.85m§				100S	GS	F10h
86	MS1049	1.0m	05m	5 0p	6.0	65m	320m	535m		30n	2 0	130					125S	Ge	F10c
87	MS1081	1 0m	.05m	5 0p	6.0	65m	320m	535m		30n	2 0	130					100J	Ge	F84
88	MS1081A	1.0m		5 0p		65m	.32	47			3.0 ⧄							Ge	
89	TD713	1.0m	25u	5.0p	8.0	65m	355m	510m		800p	1.7	118		5 0m			100S	Ge	A82
90#	TU10/1	1.0m	.10m	5 0p	4.0	7 0m	55m	250m		75n	3 0 ⧄	110					100S	Ge	S211
91#	TU10/2	1.0m	30m	5.0p	4.0	7 0m	55m	250m		75n	3 0 ⧄	110					100S	Ge	S211
92♦#	AEY23	1 0m	.05m	6.0p	4 0	65m	300m		2.4G	3.0n	5 0			10m			90S	Ge	DO17
93	G25001A	1.0m	.10m	6 0p	6.0				2 5GØ	.30n	2 0	65						Ge	F10r
94	G25001D	1.0m	.10m	6 0p	6.0				2.5GØ	.10n	2.0	65						Ge	F54d
95	1N3712	1 0m	10m	10p	5 0	65m	350m	500m	2.3G	.50n	1 5	125		5 0m			100S	Ge	A82a
96	TD712	1.0m	.10m	10p	8.0	65m	350m	500m		80n	1.5	125		5 0m			100S	Ge	A82
97#	TU101	1 0m	10m	10p	4 0	7 0m	55m	250m		1.5n	3.0	110					100S	Ge	M264
98	A1H010A	1.0m	10	11p	10	160m	535m	1.1k		300p							100A	GS*	F10ab
99	TD15	1.0m	05m	12p	5 0	55m	325m	465m		6.0n	1 5	150		10m	50m		75A	Ge	TO18
100	1N3560	1.0m	25u	20p	5 0	55m	320m	475m	1.3G	1.0n	1.5			3.0m			100	Ge	C16
101	1N3561	1.0m	25u	20p	8 0	55m	320m	475m	1.3G	1.0n	1.5			3.0m			100	Ge	C16
102	1N2929	1.0m	.10m	150p	2 5	80m	500m	700m			2.0			5.0m			200S	Si	TO18
103	1N2929A	1.0m	20u	150p		80mΔ	500mΔ	1.0 Δ			2 0 ⧄			5.0m			200S		TO18
104	1N4396	1.0m	.10m	150p	2 5	80m	500m	680m			2.0			2 0m			200S	Si	DO17
105	A1B430D	1.3m		320fØ					30MØ	100p	10	52 ⧄					100A	GS*	F10aa
106	A1B430E	1.3m		320fØ					30MØ	100p	10	52 ⧄					100A	GS*	F54e
107	A1B425A	1.3m		450fØ					25MØ	300p	9 0	52 ⧄					100A	GS*	F10ab
108	A1B425D	1 3m		450fØ					25MØ	100p	9.0	52 ⧄					100A	GS*	F10aa
109	A1B425E	1 3m		450fØ					25MØ	100p	9.0	52 ⧄					100A	GS*	F54e
110	A1B630A	1 3m		450fØ					30MØ	300p	9.0	38 ⧄					100A	GS*	F10ab

SYMBOLS AND CODES EXPLAINED IN INTERPRETER

11. TUNNEL DIODES

IN ORDER OF (1) PEAK CURRENT, (2) MAXIMUM CAPACITANCE, and (3) TYPE No.

LINE No.	3 TYPE No.	PEAK CUR. 1 Ip (A)	TOLERANCE ± (A)	2 MAX. TOTAL CAP. (F)	MIN Ip/Iv	Vp (V)	Vv (V)	Vf at Ip (V)	RESISTIVE CUTOFF FREQ. (Hz)	SER. IND. Ls (H)	SER. RES. Rs (Ω)	NEG. RES. -R (Ω)	NOISE VOLT. (V)	ABSOLUTE MAX. RATINGS FWD. CUR. (A)	DISS. @25°C (W)	THER. RES. °C/mW	MAX. TEMP (°C)	DESCRIPTION MAT.	DWG. No.
1	A1B630D	1 3m		450fØ					30MØ	100p	9.0	38 ☑					100A	GS*	F10aa
2	A1B630E	1.3m		450fØ					30MØ	100p	9.0	38 ☑					100A	GS*	F54e
3	A1B625A	1.3m		520fØ					25MØ	300p	8.0	38 ☑					100A	GS*	F10ab
4	A1B625D	1 3m		520fØ					25MØ	100p	8.0	38 ☑					100A	GS*	F10aa
5	A1B625E	1.3m		520fØ					25MØ	100p	8.0	38 ☑					100A	GS*	F54e
6	A1B420A	1 3m		600fØ					20MØ	300p	8.0	52 ☑					100A	GS*	F10ab
7	A1B420D	1 3m		600fØ					20MØ	100p	8.0	52 ☑					100A	GS*	F10aa
8	A1B420E	1 3m		600fØ					20MØ	100p	8.0	52 ☑					100A	GS*	F54e
9	A1B620A	1.3m		750fØ					20MØ	300p	7.0	38 ☑					100A	GS*	F10ab
10	A1B620D	1.3m		750fØ					20MØ	100p	7.0	38 ☑					100A	GS*	F10aa
11	A1B620E	1.3m		750fØ					20MØ	100p	7.0	38 ☑					100A	GS*	F54e
12	A1B415A	1 3m		900fØ					15MØ	300p	7.0	52 ☑					100A	GS*	F10ab
13	A1B415D	1.3m		900fØ					15MØ	100p	7.0	52 ☑					100A	GS*	F10aa
14	A1B415E	1.3m		900fØ					15MØ	100p	7.0	52 ☑					100A	GS*	F54e
15	A1B615A	1.3m		1.0pØ					15MØ	300p	6.0	38 ☑					100A	GS*	F10ab
16	A1B615D	1 3m		1.0pØ					15MØ	100p	6.0	38 ☑					100A	GS*	F10aa
17	A1B615E	1 3m		1 0pØ					15MØ	100p	6.0	38 ☑					100A	GS*	F54e
18	A1B410A	1 3m		1 6pØ					10MØ	300p	5.0	52 ☑					100A	GS*	F10ab
19	A1B410D	1 3m		1.6pØ					10MØ	100p	5.0	52 ☑					100A	GS*	F10aa
20	A1B410E	1 3m		1.6pØ					10MØ	100p	5.0	52 ☑					100A	GS*	F54e
21	A1B610A	1.3m		1.8pØ					10MØ	300p	5.0	38 ☑					100A	GS*	F10ab
22	A1B610D	1.3m		1.8pØ					10MØ	100p	5.0	38 ☑					100A	GS*	F10aa
23	A1B610E	1 3m		1.8pØ					10MØ	100p	5.0	38 ☑					100A	GS*	F54e
24	A1B405A	1 3m		3.5pØ					5.0MØ	300p	4.0	52 ☑					100A	GS*	F10ab
25	A1B405D	1 3m		3 5pØ					5 0MØ	100p	4.0	52 ☑					100A	GS*	F10aa
26	A1B405E	1 3m		3.5pØ					5.0MØ	100p	4.0	52 ☑					100A	GS*	F54e
27	A1B605A	1 3m		3 75pØ					5.0MØ	300p	4.0	38 ☑					100A	GS*	F10ab
28	A1B605D	1.3m		3.75pØ					5.0MØ	100p	4.0	38 ☑					100A	GS*	F10aa
29	A1B605E	1 3m		3 75pØ					5.0MØ	100p	4.0	38 ☑					100A	GS*	F54e
30	G50X15D	1 5m	.15m	20p	6 0				50GØ	.10n	7.0	80						Ge	F54d
31	G40015D	1.5m	.15m	.30p	6 0				40GØ	.10n	6 0	75						Ge	F54d
32	MS1209A	1.5m		.30pØ					50GØ	.10n	7.0	120	1.5m§				100S	Ge	F54
33	G30015A	1.5m	15m	.40p	6.0				30GØ	.30n	5.0	75						Ge	F10r
34	G30015D	1.5m	.15m	.40p	6.0				30GØ	.10n	5.0	75						Ge	F54d
35	MS1208A	1.5m		40pØ					40GØ	.10n	7 0	120	1.5m§				100S	Ge	F54
36	MA4604A1	1 5m		50pØ	5 0	55m			25G		8 0 ☑	70	60m					Ge	F56
37	G25X15A	1.5m	.15m	60p	6 0				25GØ	.30n	5 0	75						Ge	F10r
38	G25X15D	1 5m	15m	60p	6 0				25GØ	10n	5.0	75						Ge	F54d
39	MS1023A	1 5m		60pØ					30GØ	.30n	6.0	120	1 4m§				100S	Ge	F10h
40	MS1207A	1 5m		60pØ					30GØ	.10n	6.0	120	1.4m§				100S	Ge	F54
41	MS1526A	1.5m		60pØ					25GØ	.30n	8.0	85 ☑	.95m§				100S	GS	F10h
42	MS1586A	1 5m		60pØ					25GØ	.10n	8.0	85 ☑	.95m§				100S	GS	F54
43	MS1022A	1.5m		70pØ					25GØ	.30n	5 0	120	1 4m§				100S	Ge	F10h
44	MS1206A	1.5m		70pØ					25GØ	.10n	5 0	120	1 4m§				100S	Ge	F54
45	G20015A	1.5m	.15m	.75p	6 0				20GØ	.30n	4.0	70						Ge	F10r
46	G20015D	1.5m	15m	.75p	6.0				20GØ	.10n	4 0	70						Ge	F54d
47	MS1021A	1 5m		80pØ					20GØ	.30n	5.0	120	1 4m§				100S	Ge	F10h
48	MS1205A	1.5m		80pØ					20GØ	.10n	5.0	120	1.4m§				100S	Ge	F54
49	MS1525A	1 5m		80pØ					20GØ	.30n	7.0	85 ☑	.95m§				100S	GS	F10h
50	MS1585A	1 5m		.80pØ					20GØ	.10n	7 0	85 ☑	.95m§				100S	GS	F54
51	G15015A	1.5m	15m	.90p	6.0				15GØ	30n	3.0	70						Ge	F10r
52	G15015D	1 5m	15m	90p	6 0				15GØ	10n	3.0	70						Ge	F54d
53	MS1020A	1 5m		1 0pØ					15GØ	.30n	4.0	120	1.4m§				100S	Ge	F10h
54	MS1204A	1 5m		1.0pØ					15GØ	.10n	4.0	120	1 4m§				100S	Ge	F54
55	MS1524A	1 5m		1.0pØ					15GØ	.30n	7 0	85 ☑	.90m§				100S	GS	F10h
56	MS1584A	1 5m		1.0pØ					15GØ	.10n	7 0	85 ☑	.90m§				100S	GS	F54
57	MA4604A	1 5m	45m	1 2p	5.0	55m	350m		15G	.10n	8 0	70	45m☑				125S	Ge	F10f
58	MS1007A	1 5m		1 2pØ					10GØ	.30n	4.0	120	1.4m§				100S	Ge	F10h
59	MS1202A	1 5m		1 2pØ					10GØ	.10n	4.0	120	1.4m§				100S	Ge	F54
60	MS1523A	1.5m		1 2pØ					12GØ	.30n	6.0	85 ☑	.90m§				100S	GS	F10h
61	MS1583A	1 5m		1 3pØ					12GØ	.10n	6 0	85 ☑	.90m§				100S	GS	F54
62	G10015A	1 5m	15m	1 4p	6.0				10GØ	30n	3.0	70						Ge	F10r
63	G10015D	1 5m	15m	1.4p	6 0				10GØ	.10n	3.0	70						Ge	F54d
64	MS1005A	1 5m		1 8pØ					6.0GØ	30n	3.0	120	1.4m§				100S	Ge	F10h
65	MS1201A	1 5m		1.8pØ					6.0GØ	.10n	3.0	120	1 4m§				100S	Ge	F54
66	MA4604B	1 5m	.45m	1 9p	5 0	55m	350m		10G	10n	6.0	70	65m☑				125S	Ge	F10f
67	MS1522A	1 5m		2.0pØ					8.0GØ	.30n	5.0	85 ☑	.85m§				100S	GS	F10h
68	MS1582A	1 5m		2 0pØ					8.0GØ	.10n	5 0	85 ☑	.85m§				100S	GS	F54
69	MS1521A	1 5m		2 5pØ					6 0GØ	30n	4.0	85 ☑	.85m§				100S	GS	F10h
70	MS1581A	1.5m		2 5pØ					6.0GØ	10n	4 0	85 ☑	.85m§				100S	GS	F54
71	G50015A	1.5m	15m	3 1p	6 0				5 0GØ	.30n	2 0	65						Ge	F10r
72	G50015D	1 5m	15m	3.1p	6 0				5.0GØ	10n	2.0	65						Ge	F54d
73	MA4604C	1.5m	45m	3 6p	5 0	55m	350m		3 0G	.10n	6 0	70	85m☑				125S	Ge	F10f
74	MS224A	1 5m		5 0pØ					3 0GØ	.30n	2.0	120	1.3m§				100S	Ge	F10h
75	MS1520A	1 5m		5 0pØ					3.0GØ	.30n	3.0	85 ☑	.85m§				100S	GS	F10h
76	G25015A	1 5m	.15m	6 0p	6 0				2 5GØ	30n	2.0	65						Ge	F10r
77	G25015D	1 5m	.15m	6 0p	6 0				2.5GØ	.10n	2.0	65						Ge	F54d
78#	1S1677	1 6m	200u	900f	6 0				28G	100p	7.0	80		5 0m			80J	Ge	F54b
79#	1S1676	1.6m	200u	1 3p	6 0				18G	100p	5.0	80		5 0m			80J	Ge	F54b
80	A1G250D	1.7m		200fØ					50MØ	100p	10	70 ☑					100A	Ge*	F10aa
81	A1G250E	1 7m		200fØ					50MØ	100p	10	70 ☑					100A	Ge*	F54e
82	A1G240D	1 7m		220fØ					40MØ	100p	9.0	70 ☑					100A	Ge*	F10aa
83	A1G240E	1 7m		220fØ					40MØ	100p	9.0	70 ☑					100A	Ge*	F54e
84	A1G230D	1 7m		300fØ					30MØ	100p	8.0	70 ☑					100A	Ge*	F10aa
85	A1G230E	1.7m		300fØ					30MØ	100p	8 0	70 ☑					100A	Ge*	F54e
86	A1G225D	1 7m		380fØ					25MØ	100p	7 0	70 ☑					100A	Ge*	F10aa
87	A1G225E	1 7m		380fØ					25MØ	100p	7.0	70 ☑					100A	Ge*	F54e
88	A1G220D	1 7m		520fØ					20MØ	100p	6.0	70 ☑					100A	Ge*	F10aa
89	A1G220E	1 7m		520fØ					20MØ	100p	6 0	70 ☑					100A	Ge*	F54e
90	A1G215A	1 7m		750fØ					15MØ	300p	4.0	70 ☑					100A	Ge*	F10ab
91	A1G215D	1 7m		750fØ					15MØ	100p	4 0	70 ☑					100A	Ge*	F10aa
92	A1G215E	1 7m		750fØ					15MØ	100p	4 0	70 ☑					100A	Ge*	F54e
93	A1G210A	1 7m		1 2pØ					10MØ	300p	3.0	70 ☑					100A	Ge*	F10ab
94	A1G210D	1 7m		1 2pØ					10MØ	100p	3 0	70 ☑					100A	Ge*	F10aa
95	A1G210E	1.7m		1 2pØ					10MØ	100p	3.0	70 ☑					100A	Ge*	F54e
96	A1G205A	1 7m		3 0pØ					5.0MØ	300p	2.0	70 ☑					100A	Ge*	F10ab
97	A1G205D	1 7m		3 0pØ					5.0MØ	100p	2.0	70 ☑					100A	Ge*	F10aa
98	A1G205E	1 7m		3.0pØ					5 0MØ	100p	2.0	70 ☑					100A	Ge*	F54e
99	TD409	1.85m		09pØ	8 0	78m	400m	580m	65GØ		8 0 ☑	70		2.0m			75A	Ge	M323
100	TD408	1 85m		13pØ	8 0	77m	400m	580m	50GØ		7.0 ☑	70		2 0m			75A	Ge	M323
101	TD407	1 85m		18pØ	8 0	76m	400m	580m	40GØ		6.0 ☑	70		2 0m			75A	Ge	M323
102	TD406	1 85m		25pØ	8 0	75m	390m	570m	30GØ		6 0 ☑	70		2 0m			75A	Ge	M323
103	TD405	1 85m		36pØ	8.0	74m	390m	570m	25GØ		6.0 ☑	70		2 0m			75A	Ge	M323
104	TD404	1 85m		46pØ	8 0	72m	380m	560m	20GØ		5.0 ☑	70		2 0m			75A	Ge	M323
105	TD403	1 85m		65pØ	8 0	70m	380m	550m	15GØ		5 0 ☑	70		2 0m			75A	Ge	M323
106	TD402	1 85m		1 0pØ	8.0	67m	360m	540m	10GØ		4.0 ☑	70		2 0m			75A	Ge	M323
107	TD401	1 85m		2 0pØ	8.0	65m	350m	520m	5.0GØ		3.0 ☑	70		2 0m			75A	Ge	M323
108	A1G450D	2 0m		250fØ					50MØ	100p	9.0	52 ☑					100A	Ge*	F10aa
109	A1G450E	2 0m		250fØ					50MØ	100p	9.0	52 ☑					100A	Ge*	F54e
110	A1G440D	2 0m		300fØ					40MØ	100p	8.0	52 ☑					100A	Ge*	F10aa

SYMBOLS AND CODES EXPLAINED IN INTERPRETER

11. TUNNEL DIODES

IN ORDER OF (1) PEAK CURRENT, (2) MAXIMUM CAPACITANCE, and (3) TYPE No.

LINE No.	3 TYPE No.	PEAK CUR 1 Ip (A)	TOLERANCE ± (A)	2 MAX. TOTAL CAP (F)	MIN Ip/Iv	Vp (V)	Vv (V)	RESISTIVE Vf at Ip (V)	CUTOFF FREQ. (Hz)	SER. IND. Ls (H)	SER. RES. Rs (Ω)	NEG. RES. -R (Ω)	NOISE VOLT. (V)	ABSOLUTE MAX. RATINGS FWD. CUR. (A)	DISS. @25°C (W)	THER. RES. °C/mW	MAX. TEMP (°C)	DESCRIPTION MAT.	DWG. No.
1	A1G440E	2 0m		300fØ					40MØ	100p	8 0	52 ⊠					100A	Ge*	F54e
2	G50X02D	2 0m	20m	30p	6 0				50GØ	.10n	6.0	65						Ge	F54d
3	A1G430D	2 0m		380fØ					30MØ	100p	7.0	52 ⊠					100A	Ge*	F10aa
4	A1G430E	2 0m		380fØ					30MØ	100p	7 0	52 ⊠					100A	Ge*	F54e
5	MS1575A	2.0m		40pØ					30GØ	10n	7 0	60 ⊠	95m§				100S	GS	F54
6	A1G425D	2 0m		450fØ					25MØ	100p	6 0	52 ⊠					100A	Ge*	F10aa
7	A1G425E	2 0m		450fØ					25MØ	100p	6.0	52 ⊠					100A	Ge*	F54e
8	G40002D	2 0m	20m	50p	6 0				40GØ	10n	5 0	60						Ge	F54d
9	A1G420D	2 0m		600fØ					20MØ	100p	5 0	52 ⊠					100A	Ge*	F10aa
10	A1G420E	2 0m		600fØ					20MØ	100p	5 0	52 ⊠					100A	Ge*	F54e
11	MS1513A	2 0m		60pØ					25GØ	30n	7 0	60 ⊠	.95m§				100S	GS	F10h
12	MS1574A	2.0m		60pØ					25GØ	10n	7.0	60 ⊠	95m§				100S	GS	F54
13	G30002A	2 0m	20m	70p	6 0				30GØ	30n	5 0	55						Ge	F10r
14	G30002D	2 0m	20m	70p	6.0				30GØ	10n	5 0	55						Ge	F54d
15	A1G415A	2 0m		800fØ					15MØ	300p	4.0	52 ⊠					100A	Ge*	F10ab
16	A1G415D	2 0m		800fØ					15MØ	100p	4.0	52 ⊠					100A	Ge*	F10aa
17	A1G415E	2 0m		800fØ					15MØ	100p	4.0	52 ⊠					100A	Ge*	F54e
18	MS1511A	2 0m		80pØ					20GØ	.30n	6.0	60 ⊠	.95m§				100S	GS	F10h
19	MS1573A	2 0m		80pØ					20GØ	10n	6.0	60 ⊠	95m§				100S	GS	F54
20	G25X02A	2 0m	20m	90p	6 0				25GØ	30n	4.0	50						Ge	F10r
21	G25X02D	2 0m	.20m	90p	6 0				25GØ	10n	4.0	50						Ge	F54d
22	G20002A	2 0m	20m	1 0p	6 0				20GØ	.30n	4 0	45						Ge	F10r
23	G20002D	2 0m	.20m	1.0p	6.0				20GØ	10n	4 0	45						Ge	F54d
24	MS1510A	2 0m		1 0pØ					15GØ	30n	6.0	60 ⊠	.90m§				100S	GS	F10h
25	MS1572A	2 0m		1 0pØ					15GØ	10n	6 0	60 ⊠	90m§				100S	GS	F54
26	G15002A	2 0m	20m	1.2p	6 0				15GØ	30n	3 0	45						Ge	F10r
27	G15002D	2.0m	20m	1 2p	6 0				15GØ	10n	3.0	45						Ge	F54d
28	MA4605A	2 0m	60m	1.3p	6 0	55m	350m		15G	10n	8 0	50	45m				125S	Ge	F10f
29	MS1506A	2 0m		1 5pØ					12GØ	30n	5 0	60 ⊠	.90m§				100S	GS	F10h
30	MS1571A	2.0m		1 5pØ					12GØ	10n	5.0	60 ⊠	.90m§				100S	GS	F54
31	G10002A	2 0m	20m	1 6p	6 0				10GØ	.30n	3 0	45						Ge	F10r
32	G10002D	2 0m	20m	1 6p	6 0				10GØ	10n	3 0	45						Ge	F54d
33	A1G410A	2 0m		1 8pØ					10MØ	300p	3 0	52 ⊠					100A	Ge*	F10ab
34	A1G410D	2 0m		1 8pØ					10MØ	100p	3.0	52 ⊠					100A	Ge*	F10aa
35	A1G410E	2 0m		1 8pØ					10MØ	100p	3 0	52 ⊠					100A	Ge*	F54e
36#	AEY16	2 0m	20m	2 1pΔØ	6 0	50m	300m		10GØ	12n	90	50					70J	Ge	F56
37	MA4605B	2 0m	60m	2 4p	6 0	55m	350m		10G	10n	6 0	50	65m				125S	Ge	F10f
38	MS1509A	2 0m		2.5pØ					8 0GØ	30n	5 0	60 ⊠	85m§				100S	GS	F10h
39	MS1570A	2 0m		2 5pØ					8 0GØ	10n	5.0	60 ⊠	85m§				100S	GS	F54
40#	AEY15	2 0m	20m	2 8pΔØ	6 0	50m	300m		8 0GØ	12n	90	50					70J	Ge	F56
41	MS1300	2 0m	10m	3 0p	6.0	70m	375m	500m		50n	5.0						100	Ge	DO17
42	MS1700	2 0m	10m	3.0p	12	120m	550m	1.0		.50n	6 0						100	GA	DO17
43	A1G405A	2 0m		3 3pØ					5 0MØ	300p	2 0	52 ⊠					100A	Ge*	F10ab
44	A1G405D	2 0m		3 3pØ					5 0MØ	100p	2 0	52 ⊠					100A	Ge*	F10aa
45	A1G405E	2 0m		3 3pØ					5 0MØ	100p	2 0	52 ⊠					100A	Ge*	F54e
46#	AEY13	2.0m	.20m	3 5pΔØ	6 0	50m	300m		6 0GØ	12n	90	50					70J	Ge	F56
47	G50002A	2 0m	.20m	4 0p	6 0				5 0GØ	30n	2 0	40						Ge	F10r
48	G50002D	2 0m	20m	4 0p	6 0				5 0GØ	10n	2.0	40						Ge	F54d
49	G50002E	2 0m	20m	4 0p	6 0				5 0GØ	05n	2 0	40						Ge	F10s
50	MA4605C	2 0m	60m	4 4p	6 0	55m	350m		3 0G	10n	5.0	50	85m				125S	Ge	F10f
51	G25002A	2 0m	20m	7 5p	6 0				2 5GØ	30n	2 0	40						Ge	F10r
52	G25002D	2.0m	20m	7 5p	6 0				2 5GØ	10n	2 0	40						Ge	F54d
53#	1S1200A	2 0m	50u	10p	5 0	65m	35	50			2 0 ⊠	70		20m			100S		
54#	1T1101	2 0m	05m	10p	7 0	70m	340m	480m	3 0G	40n	1 5	60		40m	25m		100J	Ge*	M27
55#	1T1102	2 0m	05m	10p	4 5	70m	340m	480m	3 0G	40n	1 5	70		40m	25m		100J	Ge*	M27
56#	1T1103	2 0m	30m	10p	4 5	70m	340m	480m	3 0G	40n	1 5	70		40m	25m		100J	Ge*	M27
57#	TU11/1	2 0m	20m	10p	4.0	7 0m	55m	250m		75n	2 5 ⊠	80					100S	Ge	S211
58#	TU11/2	2 0m	60m	10p	4 0	7 0m	55m	250m		75n	2 5 ⊠	80					100S	Ge	S211
59#	1S1199A	2 0m	100u	15p	5.0	65m	35	50			2 0 ⊠	70		20m			100S		
60#	TU102	2 0m	20	15p	4.0						2.0	80						Ge	M264
61#	1S1198A	2 0m	200u	20p	5.0	65m	35	.50			2.5 ⊠	70		20m			100S		
62#	1T1110	2 0m	.30m	30p	4.5	70m	340m	480m	1 5G	40n	1 5	70		40m	25m		85J	Ge*	M27
63	TD251A	2 2m	.22m	1 0p	8.0	80m	390m	580m		1 5n	7 0			2 2m	1.5m		75A	Ge	M214
64▼	TD261A	2 2m	200m	1 0p	8 0	110m	390m	650m		1 5n	7 0			2 2m	1 5m		100	Ge	M214
65▼	TD271A	2 2m	200m	1 0p	8 0	110m	390m	675m		150p	7 0			2 2m	1 5m		100	Ge	DO20
66	TD251	2 2m	22m	3.0p	8 0	70m	390m	540m		1 5n	5 0			2 2m	1 5m		75A	Ge	M214
67▼	TD261	2 2m	200m	3 0p	8.0	100m	390m	650m		1 5n	5 0			2 2m	1 5m		100	Ge	M214
68▼	TD271	2 2m	200m	3 0p	8 0	100m	390m	675m		150p	5.0			2.2m	1 5m		100	Ge	DO20
69	1N3715	2 2m	.05m	10p	7 0	65m	355m	510m	3 0G	50n	1.1	53		10m			100S	Ge	A82a
70	JAN1N3715	2.2m	05m	10p		72mΔ	395mΔ	535mΔ			3 0 ⊠	62 ⊠		10m			100A	Ge	A82a
71	TD715	2 2m	05m	10p	8 0	65m	355m	510m		80n	1 1	53		10m			100S	Ge	A82
72	1N3714	2 2m	20m	25pΔØ	4 2	65m	350m	500m	2.2G	50n	1.0	55		10m			100S	Ge	A82a
73	TD714	2 2m	200u	25p	8.0	65m	350m	500m		800p	1 0	50					100S	Ge	A82
74	1N4397	2 2m	22m	200p	2 5	80m	510m	690m			2.0			4 5m			200S	Si	DO17
75	TD419	2 35m		.11pØ	8 0	78m	400m	580m	65GØ		8.0 ⊠	60		2 0m			75A	Ge	M323
76	TD418	2 35m		.15pØ	8 0	77m	400m	580m	50GØ		7 0 ⊠	60		2 0m			75A	Ge	M323
77	TD417	2.35m		.22pØ	8 0	76m	400m	580m	40GØ		6 0 ⊠	60		2 0m			75A	Ge	M323
78	TD416	2 35m		.30pØ	8 0	75m	390m	570m	30GØ		6 0		60m	2 0m			75A	Ge	M323
79	TD415	2 35m		.41pØ	8 0	74m	390m	570m	25GØ		6 0 ⊠	60		2 0m			75A	Ge	M323
80	TD414	2 35m		53pØ	8 0	72m	380m	560m	20GØ		5.0 ⊠	60		2.0m			75A	Ge	M323
81	TD413	2 35m		.75pØ	8 0	70m	380m	550m	15GØ		5.0 ⊠	60		2 0m			75A	Ge	M323
82	TD412	2.35m		1 2pØ	8 0	67m	360m	540m	10GØ		4 0 ⊠	60		2 0m			75A	Ge	M323
83	TD411	2 35m		2 3pØ	8 0	65m	350m	520m	5.0GØ		3 0 ⊠	60		2 0m			75A	Ge	M323
84	A1A230D	2 5m		250fØ					30MØ	100p	9.0	70 ⊠					100A	GA*	F10aa
85	A1A230E	2 5m		250fØ					30MØ	100p	9 0	70 ⊠					100A	GA*	F54e
86	A1A225D	2 5m		300fØ					25MØ	100p	8.0	70 ⊠					100A	GA*	F10aa
87	A1A225E	2 5m		300fØ					25MØ	100p	8 0	70 ⊠					100A	GA*	F54e
88	A1G650D	2 5m		300fØ					50MØ	100p	8 0	38 ⊠					100A	Ge*	F10aa
89	A1G650E	2 5m		300fØ					50MØ	100p	8 0	38 ⊠					100A	Ge*	F54e
90	MS1248A	2 5m		40pØ					50GØ	10n	7 0	85 ⊠	1 5m§				100S	Ge	F54
91	A1A220D	2 5m		450fØ					20MØ	100p	7 0	70 ⊠					100A	GA*	F10aa
92	A1A220E	2 5m		450fØ					20MØ	100p	7.0	70 ⊠					100A	GA*	F54e
93	A1G640D	2 5m		450fØ					40MØ	100p	8 0	38 ⊠					100A	Ge*	F10aa
94	A1G640E	2 5m		450fØ					40MØ	100p	8 0	38 ⊠					100A	Ge*	F54e
95	A1G630D	2 5m		500fØ					30MØ	100p	7 0	38 ⊠					100A	Ge*	F10aa
96	A1G630E	2 5m		500fØ					30MØ	100p	7 0	38 ⊠					100A	Ge*	F54e
97	MS1247A	2 5m		50pØ					40GØ	.10n	7 0	85 ⊠	1 5m§				100S	Ge	F54
98	A1A215A	2 5m		700fØ					15MØ	300p	6 0	70 ⊠					100A	GA*	F10ab
99	A1A215D	2.5m		700fØ					15MØ	100p	6.0	70 ⊠					100A	GA*	F10aa
100	A1A215E	2 5m		700fØ					15MØ	100p	6.0	70 ⊠					100A	GA*	F54e
101	A1G625A	2 5m		700fØ					25MØ	300p	6 0	38 ⊠					100A	Ge*	F10ab
102	A1G625D	2 5m		700fØ					25MØ	100p	6.0	38 ⊠					100A	Ge*	F10aa
103	A1G625E	2 5m		700fØ					25MØ	100p	6 0	38 ⊠					100A	Ge*	F54e
104	MS1146A	2 5m		70pØ					30GØ	30n	6 0	85 ⊠	1 5m§				100S	Ge	F10h
105	MS1246A	2 5m		70pØ					30GØ	.10n	6 0	85 ⊠	1.5m§				100S	Ge	F54
106	MS1145A	2 5m		80pØ					25GØ	30n	5 0	85 ⊠	1 4m§				100S	Ge	F10h
107	MS1245A	2 5m		80pØ					25GØ	10n	5 0	85 ⊠	1 4m§				100S	Ge	F54
108	MS1144A	2.5m		90pØ					20GØ	30n	4.0	85 ⊠	1 4m§				100S	Ge	F10h
109	MS1244A	2 5m		90pØ					20GØ	.10n	4.0	85 ⊠	1.4m§				100S	Ge	F54
110	A1G620A	2 5m		1 0pØ					20MØ	300p	5 0	38 ⊠					100A	Ge*	F10ab

SYMBOLS AND CODES EXPLAINED IN INTERPRETER

11. TUNNEL DIODES

IN ORDER OF (1) PEAK CURRENT, (2) MAXIMUM CAPACITANCE, and (3) TYPE No.

LINE No	3 TYPE No.	PEAK CUR. 1 Ip (A)	TOLERANCE ± (A)	2 MAX. TOTAL CAP (F)	MIN Ip/Iv	Vp (V)	Vv (V)	Vf at Ip (V)	RESISTIVE CUTOFF FREQ. (Hz)	SER. IND. Ls (H)	SER. RES Rs (Ω)	NEG. RES -R (Ω)	NOISE VOLT (V)	ABSOLUTE MAX. RATINGS FWD. CUR. (A)	DISS @25°C (W)	THER. RES. °C/mW	MAX TEMP (°C)	DESCRIPTION MAT.	DWG. No.
1	A1G620D	2 5m		1 0pØ					20MØ	100p	5.0	38 ☑					100A	Ge*	F10aa
2	A1G620E	2 5m		1 0pØ					20MØ	100p	5.0	38 ☑					100A	Ge*	F54e
3	A1A210A	2 5m		1 1pØ					10MØ	300p	5.0	70 ☑					100A	GA*	F10ab
4	A1A210D	2 5m		1 1pØ					10MØ	100p	5.0	70 ☑					100A	GA*	F10aa
5	A1A210E	2 5m		1 1pØ					10MØ	100p	5 0	70 ☑					100A	GA*	F54e
6	A1G615A	2.5m		1 2pØ					15MØ	300p	4.0	38 ☑					100A	Ge*	F10ab
7	A1G615D	2 5m		1 2pØ					15MØ	100p	4 0	38 ☑					100A	Ge*	F10aa
8	A1G615E	2 5m		1 2pØ					15MØ	100p	4 0	38 ☑					100A	Ge*	F54e
9	MS1143A	2 5m		1.2pØ					15GØ	.30n	4 0	85 ☑	1.4m§				100S	Ge	F10h
10	MS1243A	2 5m		1 2pØ					15GØ	.10n	4.0	85 ☑	1 4m§				100S	Ge	F54
11	MS1142A	2.5m		1.8pØ					10GØ	.30n	3 0	85 ☑	1.4m§				100S	Ge	F10h
12	MS1242A	2 5m		1 8pØ					10GØ	10n	3.0	85 ☑	1 4m§				100S	Ge	F54
13	A1G610A	2 5m		2 0pØ					10MØ	300p	3 0	38 ☑					100A	Ge*	F10ab
14	A1G610D	2.5m		2 0pØ					10MØ	100p	3.0	38 ☑					100A	Ge*	F10aa
15	A1G610E	2.5m		2 0pØ					10MØ	100p	3.0	38 ☑					100A	Ge*	F54e
16	A1A205A	2 5m		2.5pØ					5.0MØ	300p	4.0	70 ☑					100A	GA*	F10ab
17	A1A205D	2.5m		2.5pØ					5.0MØ	100p	4.0	70 ☑					100A	GA*	F10aa
18	A1A205E	2.5m		2.5pØ					5.0MØ	100p	4.0	70 ☑					100A	GA*	F54e
19	MS1141A	2 5m		2.7pØ					6.0GØ	.30n	3 0	85 ☑	1.4m§				100S	Ge	F10h
20	MS1241A	2 5m		2.7pØ					6 0GØ	.10n	3 0	85 ☑	1 4m§				100S	Ge	F54
21	A1G605A	2 5m		3 5pØ					5.0MØ	300p	2.0	38 ☑					100A	Ge*	F10ab
22	A1G605D	2 5m		3.5pØ					5.0MØ	100p	2.0	38 ☑					100A	Ge*	F10aa
23	A1G605E	2 5m		3 5pØ					5 0MØ	100p	2.0	38 ☑					100A	Ge*	F54e
24	MS1140A	2 5m		7.0pØ					3.0GØ	30n	2 0	85 ☑	1 3m§				100S	Ge	F10h
25♦#	AEY24	2 5m	.10m	10p	4 0	70m	320m		1.8G	3.0n	3.5			25m			90S	Ge	DO17
26	TD429	2 85m		12pØ	8.0	78m	400m	580m	65GØ		8.0 ☑	50		2 0m			75A	Ge	M323
27	TD428	2.85m		16pØ	8 0	77m	400m	580m	50GØ		7.0 ☑	50		2 0m			75A	Ge	M323
28	TD427	2.85m		24pØ	8 0	76m	400m	580m	40GØ		6.0 ☑	50		2 0m			75A	Ge	M323
29	TD426	2 85m		34pØ	8 0	75m	390m	570m	30GØ		6.0 ☑	50		2 0m			75A	Ge	M323
30	TD425	2 85m		46pØ	8 0	74m	390m	570m	25GØ		6.0 ☑	50		2 0m			75A	Ge	M323
31	TD424	2.85m		58pØ	8 0	72m	380m	560m	20GØ		5.0 ☑	50		2 0m			75A	Ge	M323
32	TD423	2.85m		.84pØ	8 0	70m	380m	550m	15GØ		5.0 ☑	50		2.0m			75A	Ge	M323
33	TD422	2.85m		1.3pØ	8 0	67m	360m	540m	10GØ		4.0 ☑	50		2 0m			75A	Ge	M323
34	TD421	2 85m		2.6pØ	8 0	65m	350m	520m	5.0GØ		3.0 ☑	50		2 0m			75A	Ge	M323
35	A15003A	3.0m	30m	1 0p	12				15GØ	30n	4 0	55						GA	F10r
36	A15003D	3.0m	30m	1.0p	12				15GØ	10n	4.0	55						GA	F54d
37	PT3531	3.0m	30m	1 1pØ	10	135m	500m		10GØ		4.5 ☑	75						GA	F10f
38	A10003A	3.0m	30m	1 5p	12				10GØ	30n	3.0	50						GA	F10r
39	A10003D	3 0m	30m	1.5p	12				10GØ	10n	3.0	50						GA	F54d
40	PT3532	3 0m	30m	2.0pØ	10	130m	500m		7.0GØ		3.5 ☑	75						GA	F10f
41	MS234	3.0m	30m	5.0p	12	60m	350m	500m	4.0GØ	30n	3.0	20	43m				125S	GS	F10c
42	A1A430D	3.5m		300fØ					30MØ	100p	8.0	52 ☑					100A	GA*	F10aa
43	A1A430E	3.5m		300fØ					30MØ	100p	8.0	52 ☑					100A	GA*	F54e
44	A1A425D	3.5m		400fØ					25MØ	100p	7 0	52 ☑					100A	GA*	F10aa
45	A1A425E	3.5m		400fØ					25MØ	100p	7.0	52 ☑					100A	GA*	F54e
46	MS1225A	3 5m		50pØ					50GØ	.10n	6 0	60 ☑	1 5m§				100S	Ge	F54
47	A1A420D	3 5m		520fØ					20MØ	100p	6.0	52 ☑					100A	GA*	F10aa
48	A1A420E	3.5m		520fØ					20MØ	100p	6.0	52 ☑					100A	GA*	F54e
49	MS1224A	3.5m		60pØ					40GØ	.10n	6.0	60 ☑	1.4m§				100S	Ge	F54
50	A1A415D	3 5m		750fØ					15MØ	100p	5 0	52 ☑					100A	GA*	F10aa
51	A1A415E	3 5m		750fØ					15MØ	100p	5 0	52 ☑					100A	GA*	F54e
52	MS1103A	3 5m		80pØ					30GØ	.30n	5.0	60 ☑	1 4m§				100S	Ge	F10h
53	MS1223A	3 5m		80pØ					30GØ	10n	5 0	60 ☑	1 4m§				100S	Ge	F54
54	MS1102A	3 5m		1.0pØ					20GØ	.30n	4.0	60 ☑	1 3m§				100S	Ge	F10h
55	MS1222A	3 5m		1.0pØ					20GØ	10n	4.0	60 ☑	1 3m§				100S	Ge	F54
56	A1A410A	3.5m		1.25pØ					10MØ	300p	4 0	52 ☑					100A	GA*	F10ab
57	A1A410D	3.5m		1.25pØ					10MØ	100p	4 0	52 ☑					100A	GA*	F10aa
58	A1A410E	3 5m		1 25pØ					10MØ	100p	4.0	52 ☑					100A	GA*	F54e
59	MS1101A	3 5m		1 4pØ					15GØ	.30n	3.0	60 ☑	1 3m§				100S	Ge	F10h
60	MS1221A	3.5m		1 4pØ					15GØ	.10n	3.0	60 ☑	1.3m§				100S	Ge	F54
61	MS225A	3.5m		2.0pØ					6.0GØ		2 0	35						Ge	
62	MS1100A	3.5m		2.5pØ					10GØ	.30n	2 5	60 ☑	1.3m§				100S	Ge	F10h
63	MS1220A	3.5m		2 5pØ					10GØ	.10n	2.5	60 ☑	1.3m§				100S	Ge	F54
64	A1A405A	3.5m		3.0pØ					5.0MØ	300p	3.0	52 ☑					100A	GA*	F10ab
65	A1A405D	3 5m		3 0pØ					5 0MØ	100p	3.0	52 ☑					100A	GA*	F10aa
66	A1A405E	3 5m		3 0pØ					5.0MØ	100p	3.0	52 ☑					100A	GA*	F54e
67	MS225△	3.5m	35m	3 0pØ	6.0	75m	300m	475m	7.0GØ	.30n	2.0	30	75m					Ge	F10c
68	TD439	3 7m		13pØ	8 0	78m	400m	580m	65GØ		7.0 ☑	40		2.0m			75A	Ge	M323
69	TD438	3 7m		18pØ	8.0	77m	400m	580m	50GØ		6.0 ☑	40		2 0m			75A	Ge	M323
70	TD437	3.7m		27pØ	8 0	76m	400m	580m	40GØ		6.0 ☑	40		2.0m			75A	Ge	M323
71	TD436	3.7m		.38pØ	8 0	75m	390m	570m	30GØ		5 0 ☑	40		2.0m			75A	Ge	M323
72	TD435	3.7m		55pØ	8.0	74m	390m	570m	25GØ		5.0 ☑	40		2.0m			75A	Ge	M323
73	TD434	3.7m		70pØ	8 0	72m	380m	560m	20GØ		5.0 ☑	40		2 0m			75A	Ge	M323
74	TD433	3 7m		1.0pØ	8.0	70m	380m	550m	15GØ		4 0 ☑	40		2 0m			75A	Ge	M323
75	TD432	3.7m		1.6pØ	8.0	67m	360m	540m	10GØ		4.0 ☑	40		2.0m			75A	Ge	M323
76	TD431	3 7m		3 2pØ	8.0	65m	350m	520m	5.0GØ		3.0 ☑	40		2 0m			75A	Ge	M323
77	MA4606A2	4.0m		60pØ	6 0	55m			30G		4 0 ☑	30						Ge	F56
78	MA4606A1	4 0m		80pØ	6 0	55m			22G		4.0 ☑	30						Ge	F56
79	MA4606A	4.0m	1 2m	1.6p	6 0	55m	350m		15GØ	.10n	4 0	30					125S	Ge	F10f
80	MA4606B	4 0m	1 2m	2.9p	6 0	55m	350m		10GØ	.10n	4 0	30					125S	Ge	F10f
81	MA4606C	4 0m	1 2m	4 4p	6 0	55m	350m		3 0GØ	10n	4.0	30					125S	Ge	F10f
82	A1A630D	4 5m		350fØ					30MØ	100p	7.0	38 ☑					100A	GA*	F10aa
83	A1A630E	4 5m		350fØ					30MØ	100p	7.0	38 ☑					100A	GA*	F54e
84	A1A625D	4 5m		450fØ					25MØ	100p	7.0	38 ☑					100A	GA*	F10aa
85	A1A625E	4.5m		450fØ					25MØ	100p	7.0	38 ☑					100A	GA*	F54e
86	A1A620D	4.5m		600fØ					20MØ	100p	6.0	38 ☑					100A	GA*	F10aa
87	A1A620E	4 5m		600fØ					20MØ	100p	6.0	38 ☑					100A	GA*	F54e
88	A1A615D	4 5m		800fØ					15MØ	100p	5.0	38 ☑					100A	GA*	F10aa
89	A1A615E	4.5m		800fØ					15MØ	100p	5.0	38 ☑					100A	GA*	F54e
90	A1A610A	4.5m		1 5pØ					10MØ	300p	4.0	38 ☑					100A	GA*	F10ab
91	A1A610D	4 5m		1 5pØ					10MØ	100p	4.0	38 ☑					100A	GA*	F10aa
92	A1A610E	4 5m		1 5pØ					15MØ	100p	4.0	38 ☑					100A	GA*	F54e
93	A1A605A	4 5m		3 5pØ					5 0MØ	300p	3.0	38 ☑					100A	GA*	F10ab
94	A1A605D	4 5m		3 5pØ					5 0MØ	100p	3 0	38 ☑					100A	GA*	F10aa
95	A1A605E	4 5m		3 5pØ					10MØ	100p	3 0	38 ☑					100A	GA*	F54e
96	TD252A	4 7m	.47m	1 0p	8.0	90m	400m	575m		1 5n	4 0			5.0m	3 5m		75A	Ge	M214
97▼	TD262A	4 7m	500m	1 0p	8 0	120m	400m	650m		1.5n	4 0			5.0m	3 5m		100	Ge	M214
98▼	TD272A	4 7m	500m	1 0p	8.0	120m	400m	675m		150p	4 0			5 0m	3 5m		100	Ge	DO20
99	TD252	4 7m	47m	6 0p	8 0	80m	390m	560m		1.5n	3.5			5 0m	3.5m		75A	Ge	M214
100▼	TD262	4.7m	500m	6 0p	8 0	110m	390m	650m		1.5n	3 5			5.0m	3 5m		100	Ge	M214
101▼	TD272	4 7m	500m	6 0p	8 0	110m	390m	675m		150p	3 5			5 0m	3 5m		100	Ge	DO20
102♦#	AEY25	4 7m	20m	15p	4 0	75m	330m		2.4G	3.0n	2 5			50m			90S	Ge	DO17
103	1N3717	4 7m	12m	25p	7 6	65m	355m	510m	3 4G	50n	52	24		25m			100S	Ge	A82a
104	JAN1N3717	4 7m	12m	25p		72m△	395m△	535m△			2 0 ☑	29 ☑		25m			100A	Ge	A82a
105#	1S1760	4 7m	11m	25p		65m		510m			2 0 ☑			30m			100	Ge	A82a
106	TD717	4 7m	120u	25p	8 0	65m	355m	510m		800p	2.0	41		25m			100	Ge	A82
107#	1S1761	4 7m	30m	40p		65m		500m			2 0 ☑			30m			100J	Ge	A82a
108	1N3716	4 7m	.50m	50p	4 0	65m	350m	500m	1 8G	.50n	50	25		25m			100S	Ge	A82a
109	1N2930	4 7m	47m	250p	2.5	85m	520m	740m			1 0			15m			200S	Si	TO18
110	1N2930A	4 7m	90u	250p		85m△	520m△	1.0 △			1.0 ☑			15m			200S		TO18

SYMBOLS AND CODES EXPLAINED IN INTERPRETER

11. TUNNEL DIODES

IN ORDER OF (1) PEAK CURRENT, (2) MAXIMUM CAPACITANCE, and (3) TYPE No.

LINE No.	TYPE No.	PEAK CUR. 1 Ip (A)	TOLERANCE ± (A)	2 MAX. TOTAL CAP. (F)	MIN Ip/Iv	Vp (V)	Vv (V)	RESISTIVE Vf at Ip (V)	CUTOFF FREQ. (Hz)	SER. IND. Ls (H)	SER. RES. Rs (Ω)	NEG. RES. -R (Ω)	NOISE VOLT. (V)	ABSOLUTE MAX. RATINGS FWD. CUR. (A)	DISS. @25°C (W)	THER RES °C/mW	MAX. TEMP (°C)	DESCRIPTION MAT.	DWG. No.
1	1N4398	4 7m	47m	250p	2.5	85m	520m	700m			1 0			10m			200S	Si	DO17
2	1N4398A	4 70m	240u	250p		79m△	520m△	1 0 △			1 0 ⊠			10m			200S	Si	DO17
3	1N4398B	4 70m	90u	250p		74m△	520m△	1 0 △			1 0 ⊠			10m			200S	Si	DO17
4	A15005A	5.0m	50m	1.0p	12				15GØ	30n	4 0	45						GA	F10r
5	A15005D	5 0m	50m	1 0p	12				15GØ	.10n	4 0	45						GA	F54d
6▼	MS1540	5 0m	500u	1 2p	12	160m	590m		10G	150p	3 0	40						GA	F54c
7	A10005A	5 0m	50m	1.5p	12				10GØ	30n	3 0	40						GA	F10r
8	A10005D	5 0m	50m	1 5p	12				10GØ	10n	3 0	40						GA	F54d
9	MA4651A	5 0m		1.5pØ	15		500m		10GØ		4.0 ⊠	45						GA	F10f
10	PT3529	5 0m	50m	2 0pØ	12	145m	500m		8 0GØ		3 0 ⊠	45						GA	F10f
11	MA4651B	5.0m		2 5pØ	15		500m		8 0GØ		3 0 ⊠	45						GA	F10f
12	A05005A	5 0m	25m	3 0p	12	135m	520m	1 0		.30n				10m				GA	F10r
13	A05005B	5 0m	25m	3 0p	12	135m	520m	1 0		30n				10m				GA	M276
14	A05005C	5 0m	25m	3 0p	12	135m	520m	1 0		50n				10m				GA	A106e
15	A05005D	5 0m	25m	3 0p	12	135m	520m	1.0		10n				10m				GA	F54d
16	G05005A	5 0m	25m	3 0p	6 0	70m	350m	480m		30n				10m				Ge	F10r
17	G05005B	5 0m	25m	3 0p	6 0	70m	350m	480m		30n				10m				Ge	M276
18	G05005C	5.0m	.25m	3.0p	6 0	70m	350m	480m		.50n				10m				Ge	A106e
19	G05005D	5.0m	25m	3.0p	6 0	70m	350m	480m		10n				10m				Ge	F54d
20	MS1152	5 0m	25m	3 0p	6 0	70m	370m	550m		30n	3 0	35					125S	Ge	F10c
21	MS1163	5 0m	25m	3 0p	6.0	70m	370m	550m		30n	3 0	35					100A	Ge	F84
22	MS1163A	5 0m		3.0p		70m	38	.50			5 0 ⊠							Ge	
23	A00005A	5 0m	50m	5.0p	12	135m	520m	1 0		30n				10m				GA	F10r
24	A00005B	5 0m	50m	5 0p	12	135m	520m	1 0		30n				10m				GA	M276
25	A00005C	5.0m	50m	5 0p	12	135m	520m	1 0		.50n				10m				GA	A106e
26	A00005D	5 0m	.50m	5 0p	12	135m	520m	1.0		.10n				10m				GA	F54d
27	G00005A	5.0m	50m	5.0p	6 0	70m	350m	480m		30n				10m				Ge	F10r
28	G00005B	5 0m	.50m	5 0p	6 0	70m	350m	480m		30n				10m				Ge	M276
29	G00005C	5 0m	50m	5 0p	6 0	70m	350m	480m		50n				10m				Ge	A106e
30	G00005D	5 0m	.50m	5.0p	6.0	70m	350m	480m		.10n				10m				Ge	F54d
31	MA4651C	5.0m		5.0pØ	15		500m		5.0GØ		2 0 ⊠	45						GA	F10f
32	MS1052	5.0m	25m	5 0p	6 0	70m	350m	540m		30n	2 0	30					125S	Ge	F10c
33	MS1083	5 0m	.25m	5.0p	6 0	70m	350m	540m		30n	2.0	30					100J	Ge	F84
34	MS1083A	5 0m		5.0p		75m	38	.52			3 0 ⊠							Ge	
35	MS1302	5 0m	25m	5.0p	6 0	75m	375m	520m		50n	3 0						100	Ge	DO17
36	MS1530	5.0m	25m	5.0p	12	125m	600m	900m	6.0G	.30n	1 0	40					125S	GA	F10c
37	MS1530A	5 0m	50m	5.0pØ		125m	600m		6 0GØ	.30n	1.0	66					150S	GA	F10h
38	MS1550	5 0m	25m	5.0p	12	125m	600m	900m	6 0G	30n	1.0	40					125S	GA	F84
39	MS1550A	5.0m		5.0p		.13	.55	1 0			4.0 ⊠							Ge	
40	MS1702	5.0m	.25m	5 0p	12	130m	550m	1.0		50n	4 0						100	GA	DO17
41	PT3530	5 0m	50m	5.0p	12	145m	500m		6.0GØ		2 5 ⊠	45						GA	F10f
42	A1H005A	5.0m	10	5.5p	10	140m	525m	1.0k		300p							100A	GS*	F10ab
43	1N3857	5 0m	25m	8 0p	8 0	70m	330m	525m			3.0 ⊠			10m	5 0m		100A	Ge	M83
44	40571	5.0m	25m	8.0p	8.0	50m	305mØ				3 0 ⊠			10m	5 0m		100A	Ge$	A106b
45	MS1301	5 0m	.25m	10p	6 0	70m	385m	500m		.50n	2.0						100	Ge	DO17
46	MS1701	5 0m	25m	10p	12	120m	550m	1 0		50n	2 0						100	GA	DO17
47	PT3528	5.0m	50m	13p	12	150m	500m		12GØ		4 0 ⊠	45						GA	F10f
48	1N3128	5 0m	250u	15p	8 0	80m△	280mØ	530m△		600p	3.0 ⊠			40m	20m	3.7	100A	Ge	M83
49	1N3852	5.0m	.25m	15p	8 0	70m	330m	525m			3.0 ⊠			10m	5 0m		100A	Ge	M83
50	40566	5 0m	.25m	15p	8 0	50m	305mØ				3 0 ⊠			10m	5.0m		100A	Ge$	A106b
51♦#	AEY26	5.0m	.25m	15p	4.0	75m	330m		2 4G	3.0n	2 5			50m			90S	Ge	DO17
52#	TU12/1	5.0m	50m	15p	4 0	7 0m	55m	250m		1.5n	2.0 ⊠	30					100S	Ge	M264
53#	TU12/2	5.0m	1.5m	15p	4 0	7.0m	55m	250m		1.5n	2.0 ⊠	30					100S	Ge	M264
54#	TU105	5 0m	.75m	20p	4 0	7.0m	55m	250m		1.5n	2.0	30					100S	Ge	M264
55	1N3847	5.0m	.50m	25p	6 0			510m			3 0 ⊠			10m	5.0m		100A	Ge	M83
56	40561	5.0m	.50m	25p	6 0						3.0 ⊠			10m	5 0m		100A	Ge$	A106b
57	1N3562	5.0m	25u	85p	6.0	55m	320m	475m	1 3G	1.0n	70			15m			100	Ge	C16
58#	SFD164	5.6m	.60m	22pØ△	7 0	65m	320m	500m	2.0G	6.0n	40	28		30m			100S	Ge	TO18
59#	1S1762	6.0m	60m	7.0p		65m		500m			5.0 ⊠			7.0m			100J	Ge	A82
60#	1S1763	6.0m	1.0m	30p		65m		500m			2 0 ⊠			30m			100J	Ge	A82a
61#	1T1104	6.0m	1 0m	30p	4.5	70m	330m	460m	3.0G	.40n	80	25		50m	30m		85J	Ge*	M27
62	A15075A	7 5m	75m	1.2p	12				15GØ	.30n	3.0	35						GA	F10r
63	A15075D	7.5m	75m	1.2p	12				15GØ	10n	3.0	35						GA	F54d
64	A10075A	7.5m	.75m	2 5p	12				10GØ	.30n	2 0	30						GA	F10r
65	A10075D	7 5m	75m	2.5p	12				10GØ	.10n	2 0	30						GA	F54d
66	MA4607A2	10m		1.0pØ	6.0	60m			30G		3.0 ⊠	10						Ge	F56
67	MA4607A1	10m		1.2pØ	6.0	60m			22G		3.0 ⊠	10						Ge	F56
68	PT3525	10m	1.0m	1.5pØ	15	175m	500m		20GØ		3.0 ⊠	24						GA	F10f
69▼	MS1541	10m	1.0m	1.9p	12	165m	590m		9.0G	150p	2.0	20						GA	F54c
70	A12010A	10m	1.0m	2.0p	12				12GØ	.30n	2 0	25						GA	F10r
71	A12010D	10m	1 0m	2.0p	12				12GØ	10n	2 0	25						GA	F54d
72	TD253B	10m	1 0m	2.0p	8 0	90m	420m	600m		1.5n	2.5			10m	7.0m		75A	Ge	M214
73▼	TD263B	10m	1.0m	2 0p	8 0	120m	420m	670m		1 5n	2.5			10m	7.0m		100	Ge	M214
74▼	TD273B	10m	1.0m	2.0p	8.0	120m	420m	675m		150p	2.5			10m	7.0m		100	Ge	DO20
75	MA4607A	10m	3.0m	2 4p	6 0	55m	350m		15GØ	.10n	3.0	10					125S	Ge	F10f
76#	1S2199	10m	1.0m	2.5p		85m	340m	550m						10m			100	Ge	A239
77	MA4652A	10m		2.5pØ	15		500m		9.0GØ		3.0 ⊠	20						GA	F10f
78	PT3526	10m	1 0m	3.0pØ	15	160m	500m		12GØ		2 8 ⊠	24						GA	F10f
79	A08010A	10m	1.0m	4.0p	12				8.0GØ	.30n	1.5	20						GA	F10r
80	A08010D	10m	1.0m	4.0p	12				8.0GØ	.10n	1.5	20						GA	F54d
81	MA4607B	10m	3.0m	4.4p	6.0	55m	350m		8.0GØ	10n	3 0	10					125S	Ge	F10f
82	A05010A	10m	.50m	5.0p	12	155m	530m	1 1		.30n				20m				GA	F10r
83	A05010B	10m	50m	5.0p	12	155m	530m	1.1		.30n				20m				GA	M276
84	A05010C	10m	.50m	5.0p	12	155m	530m	1 1		.50n				20m				GA	A106e
85	A05010D	10m	50m	5 0p	12	155m	530m	1 1		10n				20m				GA	F54d
86	G05010A	10m	50m	5 0p	6 0	80m	360m	500m		30n				20m				Ge	F10r
87	G05010B	10m	.50m	5.0p	6.0	80m	360m	500m		30n				20m				Ge	M276
88	G05010C	10m	.50m	5.0p	6.0	80m	360m	500m		.50n				20m				Ge	A106e
89	G05010D	10m	50m	5.0p	6.0	80m	360m	500m		.10n				20m				Ge	F54d
90	MA4652B	10m		5.0pØ	15		500m		6.0GØ		2.0 ⊠	20						GA	F10f
91	MS1154	10m	50m	5 0p	6.0	80m	380m	470m		.30n	2 0	18					125S	Ge	F10c
92	MS1165	10m	.50m	5.0p	6.0	80m	380m	470m		35n	2.0	18					100A	Ge	F84
93	MS1165A	10m		5 0p		80m	.38	.51			3.0 ⊠							Ge	
94	TD253A	10m	1 0m	5.0p	8.0	80m	410m	570m		1.5n	2.0			10m	7 0m		75A	Ge	M214
95▼	TD263A	10m	1 0m	5.0p	8.0	110m	410m	650m		1 5n	2.0			10m	7 0m		100	Ge	M214
96▼	TD273A	10m	1.0m	5.0p	8.0	110m	410m	675m		150p	2.0			10m	7.0m		100	Ge	DO20
97	PT3527	10m	1.0m	7.0p	15	150m	500m		8 0GØ		2 5 ⊠	24						GA	F10f
98	1N3858	10m	.50m	8.0p	8.0	75m	350m	545m			2 5 ⊠			18m	10m		100A	Ge	M83
99	40572	10m	50m	8.0p	8 0	55m	325mØ				2 5 ⊠			18m	10m		100A	Ge$	A106b
100	MA4607C	10m	3 0m	8.4p	6 0	55m	350m		3 0GØ	.10n	3 0	10					125S	Ge	F10f
101	TD253	10m	1.0m	9 0p	8.0	75m	400m	560m		1.5n	1.7			10m	7.0m		75A	Ge	M214
102▼	TD263	10m	1 0m	9.0p	8.0	100m	400m	650m		1.5n	1 7			10m	7.0m		100	Ge	M214
103▼	TD273	10m	1.0m	9.0p	8.0	100m	400m	675m		150p	1 7			10m	7.0m		100	Ge	DO20
104	A00010A	10m	1.0m	10p	12	155m	530m	1.1		30n				20m				GA	F10r
105	A00010B	10m	1.0m	10p	12	155m	530m	1.1		.30n				20m				GA	M276
106	A00010C	10m	1 0m	10p	12	155m	530m	1.1		50n				20m				GA	A106e
107	A00010D	10m	1.0m	10p	12	155m	530m	1.1		.10n				20m				GA	F54d
108	G00010A	10m	1.0m	10p	6 0	80m	360m	500m		.30n				20m				Ge	F10r
109	G00010B	10m	1 0m	10p	6 0	80m	360m	500m		30n				20m				Ge	M276
110	G00010C	10m	1 0m	10p	6 0	80m	360m	500m		.50n				20m				Ge	A106e

SYMBOLS AND CODES EXPLAINED IN INTERPRETER

11. TUNNEL DIODES

IN ORDER OF (1) PEAK CURRENT, (2) MAXIMUM CAPACITANCE, and (3) TYPE No.

LINE No.	TYPE No.	PEAK CUR. 1 Ip (A)	TOLERANCE ± (A)	2 MAX. TOTAL CAP. (F)	MIN Ip/Iv	Vp (V)	Vv (V)	RESISTIVE Vf at Ip (V)	CUTOFF FREQ. (Hz)	SER. IND. Ls (H)	SER. RES. Rs (Ω)	NEG. RES. -R (Ω)	NOISE VOLT. (V)	ABSOLUTE MAX. RATINGS FWD. CUR. (A)	DISS. @25°C (W)	THER. RES. °C/mW	MAX. TEMP (°C)	DESCRIPTION MAT.	DWG. No.
1	G00010D	10m	1.0m	10p	6.0	80m	360m	500m		.10n				20m				Ge	F54d
2	MA4652C	10m		10pØ	15		500m		4.0GØ		2 0 ☑	20						GA	F10f
3	MS1054	10m	.50m	10p	6.0	80m	370m	470m		.30n	1.0	16					125S	Ge	F10c
4	MS1085	10m	1.0m	10p	6.0	80m	370m	560m		.30n	1.0	16					100J	Ge	F84
5	MS1085A	10m		10p		80m	.38	.53			2 0 ☑							Ge	
6	MS1304	10m	50m	10p	6.0	80m	375m	525m		50n	2.0						100	Ge	DO17
7	MS1531	10m	.50m	10p	12	125m	600m	900m	4.0G	30n	.80	25					125S	GA	F10c
8	MS1531A	10m	1.0m	10pØ		125m	600m		4.0GØ	30n	.80						150S		F10h
9	MS1551	10m	50m	10p	12	125m	600m	900m	4.0G	30n	80	25					125S	GA	F84
10	MS1551A	10m		10p		.13	55	1.0			2.0 ☑							Ge	
11	MS1704	10m	.50m	10p	12	130m	550m	1.0		50n	2.0						100	GA	DO17
12	1N3853	10m	50m	15p	8.0	75m	350m	545m			2.5 ☑			18m	10m		100A	Ge	M83
13	40567	10m	.50m	15p	8.0	55m	325mØ				2.5 ☑			18m	10m		100A	Ge$	A106b
14	1N3118	10m	1.0m	20pØ	10	160m	600m	700m		6.0n	5.0 ☑	25			50m		100S	GA	DO17
15	MS1303	10m	.50m	20p	6.0	75m	385m	500m		.50n	1.5						100	Ge	DO17
16	MS1703	10m	.50m	20p	12	120m	550m	1 0		.50n	1.5						100	GA	DO17
17	TD554	10m	1.0m	20pØ	8.1	130m	550m	1 1		.50n	2 2						150S	GA	A82
18	1N3848	10m	1.0m	25p	6.0			520m			2 5 ☑			18m	10m		100A	Ge	M83
19	40562	10m	1.0m	25p	6.0						2.5 ☑			18m	10m		100A	Ge$	A106b
20♦#	AEY27	10m	.50m	30p	4 0	80m	340m		2.0G	3.0n	1 8			100m			90S	Ge	DO17
21#	TU13/1	10m	1.0m	30p	4 0	7.0m	55m	250m		1.5n	2.0 ☑	15					100S	Ge	M264
22#	TU13/2	10m	2.0m	30p	4 0	7.0m	55m	250m		1.5n	2.0 ☑	15					100S	Ge	M264
23#	TU110	10m	1.0m	40p	4.0	7.0m	55m	250m		1.5n	1.5 ☑	10					100S	Ge	M264
24	1N3719	10m	25m	50p	7.0	65m	355m	510m	2.8G	.50n	.36	12		50m			100S	Ge	A82a
25	JAN1N3719	10m	.25m	50p		72m△	395m△	535m△			1 5 ☑	14 ☑		50m			100A	Ge	A82a
26	TD719	10m	2.5m	50p	8.0	65m	355m	510m		800p	1.5	85		50m			100	Ge	A82
27	1N3718	10m	1.0m	90p	4 1	65m	350m	500m	1 6G	.50n	.30	13		50m			100S	Ge	A82a
28	TD718	10m	1.0m	90p	8.0	65m	350m	500m		800p	1 5	80		50m			100	Ge	A82
29	1N2931	10m	1.0m	400p	2.5	85m	530m	740m			1 0			25m			200S	Si	TO18
30	1N2931A	10m	200u	400p		85m△	530m△	1.0 △			1.0 ☑			25m			200S		TO18
31	1N4399	10m	1.0m	400p	2.5	85m	530m	700m			1 0			15m			200S	Si	DO17
32	1N4399A	10m	500u	400p		80m△	530m△	1 0 △			1 0 ☑			15m			200S	Si	DO17
33	1N4399B	10m	200u	400p		75m△	530m△	1.0 △			1 0 ☑			15m			200S	Si	DO17
34	PT3511	11m	15m	30p	30	185m	500m		10GØ		.80 ☑	2 0						GA	F10f
35	PT3512	11m	15m	100p	15	180m	500m		8 0GØ		70 ☑	2 0						GA	F10f
36	PT3522	18m	1.8m	1 1pØ	12	175m	500m		25GØ		3 0 ☑	14						GA	F10f
37	PT3523	18m	1.8m	4 0p	12	160m	500m		12GØ		2 5 ☑	14						GA	F10f
38	PT3524	18m	1.8m	10p	15	150m	500m		8 0GØ		2 0 ☑	14						GA	F10f
39	MA4655	20m		1 2pØ	10	150m			25GØ		3.0 ☑	13						GA	F56
40▼	MS1542	20m	2.0m	3.4p	12	170m	590m		8.0G	150p	1 5	10						GA	F54c
41	MA4653A	20m		4.0pØ	15		500m		8.0GØ		2 0 ☑	10						GA	F10f
42	A10020A	20m	2.0m	5.0p	12				10GØ	.30n	1 5	10						GA	F10r
43	A10020D	20m	2.0m	5.0p	12				10GØ	.10n	1 5	10						GA	F54d
44	MA4653B	20m		8 0pØ	15		500m		6.0GØ		1 5 ☑	10						GA	F10f
45	1N3859	20m	1.0m	10p	8.0	85m	365m	565m			2 0 ☑			35m	20m		100A	Ge	M83
46	40573	20m	1.0m	10p	8.0	65m	340mØ				2 0 ☑			35m	20m		100A	Ge$	A106b
47	A05020A	20m	1.0m	10p	12	175m	535m	1.1		30n				40m				GA	F10r
48	A05020B	20m	1 0m	10p	12	175m	535m	1 1		.30n				40m				GA	M276
49	A05020C	20m	1 0m	10p	12	175m	535m	1.1		50n				40m				GA	A106e
50	A05020D	20m	1.0m	10p	12	175m	535m	1.1		.10n				40m				GA	F54d
51	G05020A	20m	1.0m	10p	6 0	90m	370m	540m		30n				40m				Ge	F10r
52	G05020B	20m	1.0m	10p	6 0	90m	370m	540m		.30n				40m				Ge	M276
53	G05020C	20m	1 0m	10p	6 0	90m	370m	540m		50n				40m				Ge	A106e
54	G05020D	20m	1.0m	10p	6.0	90m	370m	540m		.10n				40m				Ge	F54d
55	MS1159	20m	1.0m	10p	6.0	85m	390m	490m		30n	1.0	10					125S	Ge	F10c
56	MS1167	20m	1.0m	10p	6 0	85m	390m	490m		35n	1.0	10					100A	Ge	F84
57	MS1167A	20m		10p		85m	39	.54			2 0 ☑							Ge	
58	1N3129	20m	1.0m	20p	8 0	100m△	300mØ	575m△		600p	2 5 ☑			55m	20m	3 7	100A	Ge	M83
59	1N3854	20m	1.0m	20p	8.0	85m	365m	565m			2.0 ☑			35m	20m		100A	Ge	M83
60	40568	20m	1.0m	20p	8 0	65m	340mØ				2 0 ☑			35m	20m		100A	Ge$	A106b
61	A00020A	20m	2.0m	20p	12	175m	535m	1 1		30n				40m				GA	F10r
62	A00020B	20m	2.0m	20p	12	175m	535m	1 1		.30n				40m				GA	M276
63	A00020C	20m	2.0m	20p	12	175m	535m	1.1		.50n				40m				GA	A106e
64	A00020D	20m	2.0m	20p	12	175m	535m	1.1		10n				40m				GA	F54d
65	G00020A	20m	2.0m	20p	6.0	90m	370m	540m		30n				40m				Ge	F10r
66	G00020B	20m	2.0m	20p	6.0	90m	370m	540m		30n				40m				Ge	M276
67	G00020C	20m	2.0m	20p	6 0	90m	370m	540m		.50n				40m				Ge	A106e
68	G00020D	20m	2.0m	20p	6.0	90m	370m	540m		10n				40m				Ge	F54d
69	MA4653C	20m		20pØ	15		500m		4 0GØ		1 5 ☑	10						GA	F10f
70	MS1059	20m	1.0m	20p	6 0	85m	380m	480m		30n	75	8 0					125S	Ge	F10c
71	MS1087	20m	1.0m	20p	6 0	85m	380m	480m		30n	.75	8.0					100J	Ge	F84
72	MS1087A	20m		20p		85m	.39	.53			1.5 ☑							Ge	
73	MS1305	20m	1.0m	20p	6 0	85m	385m	530m		50n	1.5						100	Ge	DO17
74	MS1532	20m	1 0m	20p	12	125m	610m	950m	3.5G	30n	.60	14					125S	GA	F10c
75	MS1532A	20m	2.0m	20pØ		125m	610m		3 5GØ	30n	60						150S	GA	F10h
76	MS1552	20m	1.0m	20p	12	125m	610m	950m	3 5G	.30n	.60	14					125S	GA	F84
77	MS1552A	20m		20p		.14	.55	1.0			1.5 ☑							Ge	
78	MS1705	20m	1.0m	20p	12	140m	550m	1 0		.50n	1.5						100	GA	DO17
79	A1H020A	20m		22p	10	180m	540m	1 1k		300p							100A	GS*	F10ab
80	1N3849	20m	2.0m	30p	6 0			540m			2.0 ☑			35m	20m		100A	Ge	M83
81	40563	20m	2.0m	30p	6.0						2.0 ☑			35m	20m		100A	Ge$	A106b
82♦#	AEY28	20m	1.0m	50p	4.0	80m	360m		1.4G	3 0n	1.0			100m			90S	Ge	DO17
83#	TU14/1	20m	2.0m	60p	4 0	7.0m	55m	250m		1 5n	2.0 ☑	10					100S	Ge	M264
84#	TU14/2	20m	4.0m	60p	4 0	7 0m	55m	250m		1 5n	2 0 ☑	10					100S	Ge	M264
85	1N2932A	21m	440u	1 2n		90m△	530m△	1 0 △			800m☑			40m			200S		TO18
86	TD254A	22m	2.2m	4.0p	8 0	100m	425m	600m		1 5n	2.0			11m	7.5m		75A	Ge	M214
87▼	TD264A	22m	2.0m	4.0p	8 0	130m	425m	680m		1 5n	2.0			11m	7.5m		100	Ge	M214
88▼	TD274A	22m	2.0m	4.0p	8 0	130m	425m	675m		150p	2.0			11m	7.5m		100	Ge	DO20
89	TD254	22m	2.2m	18p	8.0	90m	425m	600m		1 5n	1.8			11m	7.5m		75A	Ge	M214
90▼	TD264	22m	2.0m	18p	8 0	115m	425m	650m		1 5n	1 8			11m	7.5m		100	Ge	M214
91▼	TD274	22m	2.0m	18p	8.0	115m	425m	675m		150p	1.8			11m	7.5m		100	Ge	DO20
92	1N3721	22m	50m	100p	7 0	65m	355m	510m	2 6G	50n	.22	5 3		100m			100S	Ge	A82a
93	JAN1N3721	22m	50m	100p		72m△	395m△	535m△			1.0 ☑	6.2 ☑		50m			100A	Ge	A82a
94	1N3720	22m	2.0m	150p	4.2	65m	350m	500m	1 6G	50n	20	5 6		100m			100S	Ge	A82a
95	1N2932	22m	2.2m	1200p	2 5	90m	530m	740m			.80			40m			200S	Si	TO18
96	PT3519	30m	3.0m	2 5pØ	15	175m	500m		25GØ		2 5 ☑	9.0						GA	F10f
97	MA4608A	30m	9 0m	6.4p	6 0	55m	350m		10GØ	10n	2.0	4 0					125S	Ge	F10f
98	PT3520	30m	3.0m	8 0p	15	150m	500m		15GØ		2.0 ☑	9.0						GA	F10f
99	MA4608B	30m	9.0m	12 4p	6.0	55m	350m		5.0GØ	.10n	2.0	4.0					125S	Ge	F10f
100	PT3521	30m	3 0m	20p	15	145m	500m		10GØ		1 8 ☑	9 0						GA	F10f
101	MA4608C	30m	9.0m	25 4p	6.0	55m	350m		3 0GØ	10n	2 0	4.0					125S	Ge	F10f
102	PT3516	45m	4.5m	4.0p	15	175m	500m		20GØ		1.8 ☑	6.0						GA	F10f
103	PT3517	45m	4.5m	10p	15	160m	500m		15GØ		1.5 ☑	6 0						GA	F10f
104	PT3518	45m	4.5m	30p	15	150m	500m		10GØ		1.2 ☑	6 0						GA	F10f
105	1N2933A	46 5m	440u	1 8n		90m△	530m△	1.0 △			600m☑			75m			200S		TO18
106	HT95A	47m	94m		3 5	75m	450m	810m		4 0n	1 0 ☑	4 7						Si	A106a
107	1N2933	47m	4.7m	1800p	2 5	90m	530m	740m			60			75m			200S	Si	TO18
108	MA4654A1	50m		4 0pØ	10	180m			15G		2 0 ☑	4 0						GA	F56
109	TD255A	50m	5 0m	5 0p	8 0	130m	425m	640m		1 5n	1.5			25m	18m		75A	Ge	M214
110▼	TD265A	50m	5.0m	5 0p	8 0	200m	425m	750m		1 5n	1.5			25m	18m		100	Ge	M214

SYMBOLS AND CODES EXPLAINED IN INTERPRETER

11. TUNNEL DIODES

IN ORDER OF (1) PEAK CURRENT, (2) MAXIMUM CAPACITANCE, and (3) TYPE No.

LINE No.	3 TYPE No.	PEAK CUR 1 Ip (A)	TOLERANCE ± (A)	2 MAX. TOTAL CAP. (F)	MIN Ip/Iv	Vp (V)	Vv (V)	RESISTIVE Vf at Ip (V)	CUTOFF FREQ (Hz)	SER. IND. Ls (H)	SER. RES. Rs (Ω)	NEG. RES -R (Ω)	NOISE VOLT. (V)	ABSOLUTE MAX. RATINGS FWD. CUR. (A)	DISS. @25°C (W)	THER. RES. °C/mW	MAX. TEMP (°C)	DESCRIPTION MAT.	DWG. No.
1▼	TD275A	50m	5 0m	5.0p	8 0	200m	425m	675m		150p	1.5			25m	18m		100	Ge	DO20
2#	1S1764	50m	5 0m	7.0p		90m		550m			2 0 ⧄			25m			100J	Ge	A82a
3	MA4654A	50m		10pØ	10		500m		6.0GØ		1.5 ⧄	4 0						GA	F10f
4	1N3860	50m	2.5m	12p	8 0	105m	380m	585m			1 5 ⧄			85m	50m		100A	Ge	M83
5	40574	50m	2 5m	12p	8 0	80m	355mØ				1 5 ⧄			85m	50m		100A	Ge$	A106b
6	MA4654B	50m		15pØ	10		500m		4.0GØ		1 2 ⧄	4 0						GA	F10f
7	1N3130	50m	2 5m	25p	8 0	120mΔ	350mØ	620mΔ		60n	1 5 ⧄			70m	50m	1 3	100A	Ge	M83
8	40569	50m	2 5m	25p	8 0	80m	355mØ				1 5 ⧄			85m	50m		100A	Ge$	A106b
9	A05050A	50m	2 5m	25p	12	195m	540m	1 1		30n				100m				GA	F10r
10	A05050B	50m	2 5m	25p	12	195m	540m	1 1		30n				100m				GA	M276
11	A05050C	50m	2 5m	25p	12	195m	540m	1 1		50n				100m				GA	A106e
12	A05050D	50m	2 5m	25p	12	195m	540m	1 1		10n				100m				GA	F54d
13	G05050A	50m	2 5m	25p	6 0	100m	380m	565m		30n				100m				Ge	F10r
14	G05050B	50m	2 5m	25p	6.0	100m	380m	565m		30n				100m				Ge	M276
15	G05050C	50m	2 5m	25p	6 0	100m	380m	565m		50n				100m				Ge	A106e
16	G05050D	50m	2 5m	25p	6 0	100m	380m	565m		10n				100m				Ge	F54d
17	TD255	50m	5 0m	25p	8.0	110m	425m	625m		1 5n	1 4			25m	18m		75A	Ge	M214
18▼	TD265	50m	5 0m	25p	8 0	180m	425m	700m		1 5n	1.4			25m	18m		100	Ge	M214
19▼	TD275	50m	5 0m	25p	8 0	180m	425m	675m		150p	1 4			25m	18m		100	Ge	DO20
20	1N3138	50m	2 2m	30p	13	260mΔ	620mΔ	1 4 Δ		600n	2 6 ⧄			100m	40m			GA	M83
21	MA4654C	50m		30pØ	10		500m		3 0GØ		1 2 ⧄	4 0						GA	F10f
22	1N3850	50m	5 0m	40p	6 0			585m			1 5 ⧄			85m	50m		100A	Ge	M83
23	40564	50m	5 0m	40p	6 0						1 5 ⧄			85m	50m		100A	Ge$	A106b
24	A00050A	50m	5 0m	50p	12	195m	540m	1.1		30n				100m				GA	F10r
25	A00050B	50m	5 0m	50p	12	195m	540m	1 1		30n				100m				GA	M276
26	A00050C	50m	5.0m	50p	12	195m	540m	1.1		50n				100m				GA	A106e
27	A00050D	50m	5 0m	50p	12	195m	540m	1 1		.10n				100m				GA	F54d
28	G00050A	50m	5 0m	50p	6 0	100m	380m	565m		.30n				100m				Ge	F10r
29	G00050B	50m	5 0m	50p	6 0	100m	380m	565m		30n				100m				Ge	M276
30	G00050C	50m	5 0m	50p	6 0	100m	380m	565m		50n				100m				Ge	A106e
31	G00050D	50m	5 0m	50p	6 0	100m	380m	565m		10n				100m				Ge	F54d
32	MS1533	50m	2 5m	50p	12	135m	620m	1 0	3.0G	30n	40	5 0					125S	GA	F10c
33	MS1533A	50m	5 0m	50pØ		135m	620m		3.0GØ	30n	40						150S	GA	F10h
34	MS1553	50m	2 5m	50p	12	135m	620m	1 0	3 0G	30n	40	5 0					125S	GA	F84
35	MS1553A	50m		50p		16	55	1.1			1 0 ⧄							Ge	
36	A1H050A	50m		55p	10	200m	545m	1 1k		300p							100A	GS*	F10ab
37	MA4609A	60m	18m	15.4p	6 0	55m	350m		8 0GØ	10n	1 0	2 0					125S	Ge	F10f
38	MA4609B	60m	18m	30 4p	6 0	55m	350m		4 0GØ	10n	1 0	2.0					125S	Ge	F10f
39	MA4609C	60m	18m	60 4p	6 0	55m	350m		2 0GØ	10n	1 0	2.0					125S	Ge	F10f
40	PT3513	90m	9 0m	9 0p	15	180m	500m		15GØ		1.0 ⧄	3.0						GA	F10f
41	PT3514	90m	9 0m	20p	15	175m	500m		10GØ		80 ⧄	3 0						GA	F10f
42	PT3515	90m	9 0m	60p	15	170m	500m		8 0GØ		70 ⧄	3 0						GA	F10f
43	HT96A	100m	2 0m		3 5	75m	450m	810m		4.0n	1 0 ⧄	2 2						Si	A106a
44#	1S2201	100m	15m	5 0p	4 2	200m	450m	650m									100	Ge	A82a
45	TD256A	100m	10m	6.0p	8.0	180m	450m	660m		1 5n	1.2			50m	35m		75A	Ge	M214
46▼	TD266A	100m	10m	6 0p	8 0	260m	450m	800m		1 5n	1.2			50m	35m		100	Ge	M214
47▼	TD276A	100m	10m	6 0p	8 0	260m	450m	675m		150p	1 2			50m	35m		100	Ge	DO20
48	40570	100m	5.0m	25p	8 0	90m	365mØ				1 0 ⧄			170m	100m		100A	Ge$	A106b
49	TD256	100m	10m	35p	8 0	150m	450m	650m		1 5n	1 1			50m	35m		75A	Ge	M214
50▼	TD266	100m	10m	35p	8 0	210m	450m	720m		1 5n	1 1			50m	35m		100	Ge	M214
51▼	TD276	100m	10m	35p	8 0	210m	450m	675m		150p	1 1			50m	35m		100	Ge	DO20
52	1N3851	100m	10m	40p	6 0			595m			1 0 ⧄			170m	100m		100A	Ge	M83
53	40565	100m	10m	40p	6 0						1 0 ⧄			170m	100m		100A	Ge$	A106b
54	A00100A	100m	10m	100p	12	205m	545m	1 1		30n				200m				GA	F10r
55	A00100B	100m	10m	100p	12	205m	545m	1 1		30n				200m				GA	M276
56	A00100C	100m	10m	100p	12	205m	545m	1 1		50n				200m				GA	A106e
57	A00100D	100m	10m	100p	12	205m	545m	1.1		10n				200m				GA	F54d
58	G00100A	100m	10m	100p	6 0	110m	390m	575m		30n				200m				Ge	F10r
59	G00100B	100m	10m	100p	6 0	110m	390m	575m		30n				200m				Ge	M276
60	G00100C	100m	10m	100p	6 0	110m	390m	575m		50n				200m				Ge	A106e
61	G00100D	100m	10m	100p	6.0	110m	390m	575m		10n				200m				Ge	F54d
62	MS1534	100m	5.0m	100p	12	140m	630m	1 0	2 0G	30n	30	2 5					125S	GA	F10c
63	MS1534A	100m	10m	100pØ		140m	630m		2.0GØ	30n	30						150S	GA	F10h
64	MS1554	100m	5 0m	100p	12	140m	630m	1 0	2.0G	30n	30	2 5					125S	GA	F84
65	MS1554A	.10		100p		18	55	1 1			.80 ⧄							Ge	
66	A1H100A	100m		105p	10	210m	550m	1 1k		300p							100A	GS*	F10ab
67	1N2934	100m	10m	2500p	2 5	90m	530m	720m			50			100m			200S	Si	TO18
68	1N2934A	100m	2 0m	2.5n		90mΔ	530mΔ	1 0 Δ			500m⧄			150m			200S		TO18
69	PT3510	150m	15m	18p	15	190m	500m		15GØ		1 0 ⧄	2 0						GA	F10f
70	A1E207A	200m		700f				105m		300p	8 5						100A	GE*	F10ab
71	A00200A	200m	20m	200p	12	225m	550m	1 2		30n				400m				GA	F10r
72	A00200B	200m	20m	200p	12	225m	550m	1.2		30n				400m				GA	M276
73	A00200C	200m	20m	200p	12	225m	550m	1 2		30n				400m				GA	A106e
74	A00200D	200m	20m	200p	12	225m	550m	1 2		30n				400m				GA	F54d
75	G00200A	200m	20m	200p	6.0	120m	400m	580m		.30n				400m				Ge	F10r
76	G00200B	200m	20m	200p	6.0	120m	400m	580m		30n				400m				Ge	M276
77	G00200C	200m	20m	200p	6 0	120m	400m	580m		30n				400m				Ge	A106e
78	G00200D	200m	20m	200p	6.0	120m	400m	580m		30n				400m				Ge	F54d
79	MS1535	200m	10m	200p	12	145m	640m	1 0		30n	.20	1.3					125S	GA	F10c
80	MS1555	200m	10m	200p	12	145m	640m	1.0		.30n	20	1.3					125S	GA	F84
81	MS1555A	20		200p		20	55	1.1			60 ⧄							Ge	
82	A1H200A	200m		210p	10	230m	555m	1 2k		300p							100A	GS*	F10ab
83	HT25	25	25m		3.0	17	.40	73						38			200S	Si	TO18
84	HT25A	25	13m		3 0	.17	.40	.73						38			200S	Si	TO18
85	MS1535A	250m	25m	250pØ		150m	650m		1.0GØ	30n	25						150S	GA	F10h
86	A1H001A	500m	10	2 5p	10	100m	500m	950m		300p							100A	GS*	F10ab
87	A00500A	500m	50m	400p	12	240m	555m	1.2		.30n								GA	F10r
88	A00500B	500m	50m	400p	12	240m	555m	1 2		30n								GA	M276
89	A00500C	500m	50m	400p	12	240m	555m	1.2		30n								GA	A106e
90	A00500D	500m	50m	400p	12	240m	555m	1 2		30n								GA	F54d
91	G00500A	500m	50m	400p	6 0	130m	420m	620m		30n				1 0				Ge	F10r
92	G00500B	500m	50m	400p	6.0	130m	420m	620m		30n				1 0				Ge	M27
93	G00500C	500m	50m	400p	6.0	130m	420m	620m		30n				1 0				Ge	A1bz
94	G00500D	500m	50m	400p	6 0	130m	420m	620m		.30n				1 0				Ge	F54d
95	MS1536A	500m	50m	500pØ		160m	670m		70GØ	30n	17						150S	GA	F10h
96	A1R003A	1 0	10	3 5p	6.0	65m	345m	470m		300p							100A	Ge*	F10ab
97▼	1N3862	1 0		4 0p				420m§						10	10m		100S	Ge	M83
98	A001A0A	1000m	100m	800p	12	250m	565m	1 3		30n								GA	F10r
99	A001A0B	1000m	100m	800p	12	250m	565m	1 3		30n								GA	M276
100	A001A0C	1000m	100m	800p	12	250m	565m	1 3		30n								GA	A106e
101	A001A0D	1000m	100m	800p	12	250m	565m	1 3		30n								GA	F54d
102	G001A0A	1000m	100m	800p	6.0	150m	450m	650m		30n				1 5				Ge	F10r
103	G001A0B	1000m	100m	800p	6.0	150m	450m	650m		30n				1 5				Ge	M276
104	G001A0C	1000m	100m	800p	6.0	150m	450m	650m		30n				1 5				Ge	A106e
105	G001A0D	1000m	100m	800p	6.0	150m	450m	650m		30n				1 5				Ge	F54d
106	A1R005A	5 0	10	5 5p	6.0	75m	355m	485m		300p							100A	Ge*	F10ab
107	A1R010A	10	10	11p	6.0	85m	365m	510m		300p							100A	Ge*	F10ab
108	A1R020A	20	10	22p	6.0	95m	375m	545m		300p							100A	Ge*	F10ab
109	A1R050A	50	10	55p	6.0	105m	385m	570m		300p							100A	Ge*	F10ab
110	A1R100A	100	10	105p	6.0	115m	395m	580m		300p							100A	Ge*	F10ab

SYMBOLS AND CODES EXPLAINED IN INTERPRETER

11. TUNNEL DIODES

IN ORDER OF (1) PEAK CURRENT, (2) MAXIMUM CAPACITANCE, and (3) TYPE No.

LINE No.	3 TYPE No	PEAK CUR. 1 Ip (A)	TOLERANCE ± (A)	2 MAX. TOTAL CAP. (F)	MIN Ip/Iv	Vp (V)	Vv (V)	RESISTIVE Vf at Ip (V)	CUTOFF FREQ. (Hz)	SER. IND. Ls (H)	SER. RES. Rs (Ω)	NEG. RES. -R (Ω)	NOISE VOLT. (V)	ABSOLUTE MAX. RATINGS FWD. CUR. (A)	DISS. @25°C (W)	THER. RES. °C/mW	MAX. TEMP (°C)	DESCRIPTION MAT.	DWG. No.
1	A1R200A	200	10	210p	6 0	125m	400m	585m		300p							100A	Ge*	F10ab

SYMBOLS AND CODES EXPLAINED IN INTERPRETER

12. MISCELLANEOUS DIODES

IN ORDER OF (1) USE and (2) TYPE No.

LINE No	2 TYPE No.	1 USE	DESCRIPTION MAT	DWG No.	TECHNICAL DATA
1▼	TIXL109		GA	M596	Opt Coupl Isol,tr 5 0us,tf 5.0us;Input-to-Output ±5 0kV,IF 35mA,Output 250uA
2	1N72	1		DO7	Conv Loss-12db max. at 900Mc
3	1N82	1		DO7	Noise Figure-16db max.
4	1N82A	1	Si	DO7	PIV-5 0V,IF-15mA at 50V;IR-15uA at 50V;NF-14db max
5	JAN1N82A,AG	1	Si	Z21	Po-100mW max ,VR-3 0V max,f(Range) 0-1000Mc;NF-14.5db max
6	1N82AG	1	Si	A9k	PIV-5 0V, IF-15mA at 50V; IR-15uA at .50V; NF-14db max
7	1N132	1		DO7	PIV-25V; IR-500uA at 50V.
8	1N299	1		DO7	IF-3 0mA min at 50V; IR-200uA at 6.0V
9#	1S750	1	Si$⊠	A1	PRV-2.0V;IO-20mA;Lc-8db;IR-50uA at .50V;Cj-1 2pf at 0V
10#	1S1807	1	%	DO7	Pt-100mW;If-10mA min at 500mV;Ir-100uAmax at 3.0V;Ct-850f Fmax,NF-8 0dB
11#	1S1860	1	GA%	A1bw	VR-4 0V min;Ct(0V)-1.0pf max;NF(f-855MHz,Io-2.0mA)-7 5db max
12#	1S1925	1	Si	A1ce	PIV 5 0V,IF 6 0mA at 500mV;IR 10uA at 2.0V;NF 12db max;Average Rect Io 50mA max
13▼#	1S1926	1	Si	A1ce	PIV 5 0V,VF 450mVmax at 10mA;IR 20uAmax at 1 0V,NF 11 5db max.
14#	1S2198	1	Si	DO7	Schottky Barrier;NF 10 5dB max at 900MHz;CT 1 3pF max;VBR 500mV min at IR 30uA
15	GI82AG	1	Si⊠	DO7	If-12mA at 50V; Overall NF-14db; IR-15uA at 50V.
16#	MA433	1	%	A1cu	Schottky Barrier;NF-9 3db at f-890MHz;Pt-125mW;Ct-1.0pf max.
17	MA4140	1	Si	DO7	RE-65% min , test freq 100Mc
18	MBD101	1	Si%	C103	Schottky Barrier Diode,NF 7.0db max at 1 0GHz,Ct 1 0pF max;V(BR)R 4 0V min at IR 10uA
19	PK0620	1	Si	DO7△	Schottky Barrier,NF-6 0db max. at 900MHz;Ct- 75pf max;VBR-6.0V at IR-10uA
20	PK0620L	1	Si	M86c△	Schottky Barrier;NF-6.0db max. at 900MHz;Ct- 75pf max,VBR-6.0V at IR-10uA
21	PK0820	1	Si	A1ad△	Schottky Barrier,NF-6 0db max. at 900MHz;Ct- 75pf max;VBR-6.0V at IR-10uA
22	PK0820L	1	Si	M86c△	Schottky Barrier;NF-6 0db max. at 900MHz;Ct- 75pf max;VBR-6.0V at IR-10uA
23#	SD82A	1	Si	A1bw	f-900mc;NF-11 5db max
24	1N2175	2	Si	M71a	Typ Sens.Rad.Sys -22.3uA/mW/sq cm,I dark -500nAmax,at 50V;Pd-50mWmax,Bias V-50Vmax
25	1N3734	2	Si	C16s	Pc- 50W;BV-100V;Photo Sens 05uA/FC
26#	30F2	2	Si	M71f	VR-40;Sen-.03uA/Lux;Idark-.05uA max;Pd-50mW max
27#	31F2	2	Si	M71f	VR-40;Sen-.02uA/Lux;Idark-.05uA max;Pd-50mW max
28#	32F2	2	Si	M71f	VR-40,Sen- 04uA/Lux;Idark- 05uA max;Pd-50mW max.
29#	33F2	2	Si	M71f	VR-40;Sen- 08uA/Lux,Idark-.05uA max;Pd-50mW max
30#	34F2	2	Si	M71f	VR-40;Sen-.16uA/Lux;Idark- 05uA max;Pd-50mW max
31#	35F2	2	Si	M71f	VR-30;Sen-.30uA/Lux;Idark- 05uA max;Pd-50mW max
32#	APY10/I	2	Ge	M269	V-50 max; Sens -6 0mA/Lux typ.; IF-5 0uA; Ptot-40mW.
33#	APY10/II	2	Ge	M269	V-50 max; Sens.-10mA/Lux typ.; IF-5.0uA; Ptot-40mW
34#	APY11/I	2	Ge	M269	V-25 max; Sens -6.0mA/Lux typ.; IF-8 0uA; Ptot-40mW
35#	APY11/II	2	Ge	M269	V-25 max; Sens -10mA/Lux typ , IF-8 0uA; Ptot-40mW
36#	APY12/I	2	Ge	C29h	Photo Sensitivity-100nA/Lx,Ip-.50mA at Vr-100V;Id-8 0uA
37#	APY12/II	2	Ge	C29h	Photo Sensitivity-180nA/Lx;Ip- 50mA at Vr-100V,Id-8 0uA
38#	APY12/III	2	Ge	C29h	Photo Sensitivity-220nA/Lx;Ip- 50mA at Vr-100V;Id-8.0uA
39#	APY13/I	2	Ge	C29h	Photo Sensitivity-100nA/Lx,Ip-1 5mA at Vr-30V;Id-8.0uA.
40#	APY13/II	2	Ge	C29h	Photo Sensitivity-180nA/Lx;Ip-1.5mA at Vr-30V;Id-8.0uA
41#	APY13/III	2	Ge	C29h	Photo Sensitivity-220nA/Lx;Ip-1.5mA at Vr-30V;Id-8 0uA.
42	AV102	2	Si	C29g	Avalanche Photodiode;S/N improvement 300·1 at gain of 800,f-2GHz;Idark- 20nA
43▼#	BPX40	2	Si#	M623	VR 18V max,N 10nA/Lx typ;Id 500nA;Peak Spectral Response 800nm typ
44▼#	BPX41	2	Si#	M623a	VR 18V max;N 30nA/Lx typ;Id 1.0uA;Peak Spectral Response 800nm typ
45▼#	BPX42	2	Si	M624	VR 12V max,N 120nA/Lx typ;Id 5.0uA;Peak Spectral Response 800nm typ
46▼#	BPX68	2	Si△	M17e	V 100V max,N 200nA/Lx typ;Id 50nA;Peak Spectral Response 980nm typ
47▼#	BPX69	2	Si△	M17f	V 100V max;N 280nA/Lx typ;Id 50nA Peak Spectral Response 980nm typ
48#	BPY10	2	Si	M266	Sensitivity-32uA at 2000 Lux,IF-10mA;Pk.Spectral response-.80um
49#	BPY13	2	Si	C81	Surface area-12 sq.mm,Sensitivity-40uA at 20V at 1000 Lux.
50#	BPY13A	2	Si	C81	Surface area 12sq mm;Sensitivity 40uA at 100V at 1000Lux,trr2 0ns
51#	BPY68	2	Si	M71h	Sensitivity-.10uA/lux;Max. Idark-.05uA-250mW±100V.
52#	BPY69	2	Si	M71h	Sensitivity-.06uA/lux;Max. Idark-.05uA-250mW±100V
53#	BPY77	2	Si	M130e	Pt 500mW;Sens 10uA/mW/cm;BV100Vmin;Ir500pA;Cap3.0pF
54▼	CPD110	2	Si	C16s	VR 5 0V;Ilight(VR 5.0Vdc,H 20mW/cm sq.,2800°k tungsten) 10uA min, 20uA max;Idark(VR 5V)20nA.
55▼	CPD110A	2	Si	C16a	VR 20V;Ilight(VR 5 0Vdc,H 20mW/cm sq.,2800°k tungsten) 10uA min,20uA max;Idark(VR 20V)20nA
56	EA7E1	2	Si	M499	Output I 300uAmin,Dark Ir 5.0uAmax;Response time 10usec max
57	EA7E2	2	Si	M499	Output I 300uAmin;Dark Ir 10uAmax;Response time 10usec max.
58	EA7E3	2	Si	M499	Output I 250uAmin,Dark Ir 10uAmax;Response time 10usec max
59	EA7E5	2	Si	M499	Output I 200uAmin;Dark Ir 20uAmax;Response time 10usec max
60	FPM200	2	Si#	DO33	BV-100V;Idark-25nA max;Ilight-13uA min,Sens-.65uA/mW/cm sq.
61#	GP2	2	Ge	M55	Idk-50uA, Ilt-200uA; max.I-3mA; Sens.-10uA/mLm; Voltage 3-6V
62#	GP10	2	Ge	M55	Idk-20uA; Ilt-400uA; max.I-3mA; Sens.-30uA/mLm; Voltage 3-10V
63#	GP16	2	Ge	M55	Idk-10uA; Ilt-600uA; max.I-3mA; Sens.-30uA/mLm; Voltage 3-10V
64	H11	2	Si△	M71a	NPN;IDark- 50uA max;ILight-80uA;Bias Voltage-50VDC;Pd-250mW.
65	H35	2	Si△	M71a	NPN;IDark- 50uA max;ILight-90uA;Bias Voltage-50VDC;Pd-250mW
66	H38	2	Si△	M71a	NPN;IDark-10uA max;ILight-150uA;Bias Voltage-50VDC;Pd-250mW.
67	H60	2	Si△	M71a	NPN;IDark-.50uA max;ILight-150uA;Bias Voltage-50VDC;Pd-250mW
68	H61	2	Si△	M71a	NPN;IDark-.50uA max;ILight-250uA;Bias Voltage-50VDC;Pd-250mW
69	H62	2	Si△	M71a	NPN,IDark-.50uA max;ILight-350uA;Bias Voltage-50VDC;Pd-250mW
70	HP5082-4201	2	Si#	M274	PIN;PIV-200V max;Idark-2.0nA max;Cj-1 5pf max;Response time less than 1 0nsec
71	HP5082-4203	2	Si#	C92	PIN,PIV-200V max;Idark-2.0nA max;Cj-1 5pf max;Response time less than 1 0nsec
72	HP5082-4204	2	Si#	C92	PIN,PIV-200V max;Idark-.40nA max;Cj-2 0pf max;Response time less than 1 0nsec
73	HP5082-4205	2	Si#	M372	PIN;PIV-200V max;Idark-.15nA max,Cj- 70pf max,Response time less than 1.0nsec
74	HP5082-4207	2	Si#	C92	PIN;PIV-200V max;Idark-1.0nA max;Cj-5.5pf max;Response time less than 1 0nsec
75	HP5082-4220	2	Si#	C29k	PIN,PIV-200V max;Idark-5.0nA max;Cj-2.0pf max;Response time less than 1 0nsec
76	HPC4-01	2	Si	Z3	Readout Cells;Area-.38x.20in ;4 Readout Positions.
77	HPC5-01	2	Si	Z3	Readout Cells;Area-.48x 20in.;5 Readout Positions.
78	HPC6-01	2	Si	Z3	Readout Cells;Area-.58x.20in.;6 Readout Positions.
79	HPC7-01	2	Si	Z3	Readout Cells;Area-.68x 20in ;7 Readout Positions
80	HPC8-01	2	Si	Z3	Readout Cells;Area-.78x.20in.;8 Readout Positions
81	HPC9-01	2	Si	Z3	Readout Cells;Area-.88x.20in.;9 Readout Positions
82	HPC10-01	2	Si	Z3	Readout Cells;Area-.98x 20in.;10 Readout Positions
83	HPC10-02	2	Si	Z3	Readout Cells;Area-.85x 25in ;10 Readout Positions
84	L4412	2	Si	M55	PN Photovoltaic Sensor; Light I-50uA/600fc; Dark I-.50uA.
85	L4413	2	Si		Light Sensor;Light I-120uA at 10V,300 Lumens sq.ft;Dark I-.50uA at 15V
86	L4414	2	Si		Light Sensor;Light I-150uA at 1.0v,300 Lumens sq ft;Dark I-2.0uA at 1 0V.
87	L4501	2	Si	M187	Photomixer; Spectral Response-.50-1.0u; fc-40Gc
88	L4502	2	Si	M187	Photomixer; Spectral Respons-.50-1.0u; fc-10Gc
89	L4503	2	Si△	M275	Mix/Dt;VB-50V at 10uA;IF-25mA;fc-300M/s Typ;50 to 1.0 Microns.
90	L4504	2	Si△	M275	Mix/Det;VB-90V at 10uA;If-25mA;fc-600Mc/s Typ;50 to 1.0 Microns.
91	L4505	2	Si#	TO5	Mix/DET,VB 30V. at 10uA; 5-1.1 Microns;fc 16MHz;Responsivity 500mA/W
92	L4506	2	Si#	TO46	Mix/DET;VB-90V at 10ua;.5-1.1 microns;fc 600MHz; responsivity 500m A/W.
93	L4507	2	Si#	TO5	Mix/DET,VB-90V at 10uA;.5-1.1 microns;fc 250MHz; responsivity 500m A/W.
94	L4509	2	Si#	TO46	Mix/DET;VB-25V at 10uA; 5-1.1 microns;fc 1.2GHz; responsivity 500m A/W
95	L4510	2	Si#	TO5	Mix/DET;VB-25V at 10uA; 5-1.1 microns;fc 1 2GHz; responsivity 500m A/W
96	L4520	2	Ge	M187	Photo Mixer;Spectral Response-.50 to 1.8 microns;fc-1.5GHz.
97	L4530	2	InAs	M187	Photomixer; Spectral Response-.40-3.4u; fc-.50Gc
98	L4540	2	InSb	M188	Photomixer; Spectral Response-.40-5.7u; fc-.80Gc
99	LEDV3	2			Cell power 50mW;Signal Current 50mA;VF at IF 1.7 max at 50mA;Res 20kΩ typ.
100#	LP1S,U	2	Si		10uA at 1.0W light distance 30 cm; frequency-10cps.
101#	LP2S,U	2	Si		10uA at 1 0W light distance 30 cm; frequency-10cps.
102	LS221	2	Si△	M161	Nullsensor; Output-250mV min. at 2500 deg.K at 280 ft. cdls.
103	LS222	2	Si△	M162	Card Reader; Output-290uA at 1250 ft. cdls. at 2800 deg K
104	LS400	2	Si	M71a	VR-30V max;Pt-50mW max;IDark-25nA max;ILight-3.0mA;tr-1.5uS;td-15uS.
105	LS600	2	Si	M165	Light Current-.80mA min; Dark Current-25nA max; Pt-50mW;tr-1.5usec;tf-15usec
106	LSX900	2	Si$#	M165	Light Sensor; PT-50mW; BVR-140V; IDark-9.0nA; ILight-7 8uA
107	MRD500	2	Si	M419b	ID 2 0nAmax;VF1 1Vmax;BVR100Vmin;RS10Ωmax;Sens 1.2uA/mW/cm2
108	MRD510	2	Si	M419c	ID 2 0nAmax;VF1.1Vmax;BVR100Vmin;RS10Ωmax;Sens. 300nA/mW/cm2
109#	MS1A	2	Si	M143a	Output at 3.0K lumens/sq.ft:Voc-.50V, Isc-1 0mA;C-4.0nf; Rise T-1 0usec max.
110#	MS1AE	2	Si	M148a	Output at 3.0K lumens/sq.ft:Voc-.50V, Isc-1.0mA;C-4.0nf; Rise T-1.0usec max

12. MISCELLANEOUS DIODES

IN ORDER OF (1) USE and (2) TYPE No.

LINE No.	2 TYPE No.	1 USE	DESCRIPTION MAT.	DWG. No.	TECHNICAL DATA
1#	MS1B	2	Si	M143a	Output at 3.0K lumens/sq.ft:Voc-.50V, Isc-1.0mA;C-4 0nf; Rise T-1.0usec max.
2#	MS1BE	2	Si	M148a	Output at 3.0K lumens/sq.ft:Voc-.50V, Isc-1.0mA;C-4.0nf; Rise T-1.0usec max.
3#	MS2A	2	Si	M144d	Output at 3.0K lumens/sq.ft:Voc-.50V, Isc-27mA; C-.08uf.
4#	MS2AE	2	Si	M147	Output at 3.0K lumens/sq.ft:Voc-.50V, Isc-31mA; C-.08uf.
5#	MS2B	2	Si	M144d	Output at 3.0K lumens/sq.ft:Voc-.55V, Isc-31mA; C-.08uf.
6#	MS2BE	2	Si	M147	Output at 3 0K lumens/sq.ft:Voc-.55V, Isc-34mA; C-.08uf.
7#	MS4A	2	Si	M144	Output at 3.0K lumens/sq.ft:Voc-.50V, Isc-5.0mA; C-12nf; Rise T-1.0usec.max.
8#	MS4B	2	Si	M144	Output at 3.0K lumens/sq.ft:Voc-.50V, Isc-5.0mA; C-12nf; Rise T-1.0usec.max.
9#	MS5A	2	Si	M144c	Output at 3.0K lumens/sq.ft:Voc-.50V, Isc- 10mA; C-25nf; Rise T-1.0usec.max.
10#	MS5B	2	Si	M144c	Output at 3.0K lumens/sq.ft:Voc-.50V, Isc-10mA; C-25nf; Rise T-1.0usec.max.
11#	MS6A	2	Si	M144b	Output at 3.0K lumens/sq.ft:Voc-.50V, Isc-15mA; C-36nf; Rise T-1.0usec.max.
12#	MS6B	2	Si	M144b	Output at 3.0K lumens/sq.ft:Voc-.50V, Isc-15mA; C-36nf; Rise T-1.0usec.max.
13#	MS7A	2	Si	M144a	Output at 3.0K lumens/sq.ft:Voc-.50V, Isc-20mA; C-50nf; Rise T-1.0usec.max.
14#	MS7B	2	Si	M144a	Output at 3.0K lumens/sq.ft:Voc-.50V, Isc-20mA; C-50nf; Rise T-1.0usec.max.
15#	MS9A	2	Si	M143	Output at 3.0K lumens/sq.ft:Voc-.50V, Isc-.30mA; C-1.8nf;Rise T-1.0usec max.
16#	MS9AE	2	Si	M148	Output at 3.0K lumens/sq.ft:Voc-.50V, Isc-.30mA; C-1.8nf;Rise T-1.0usec max.
17#	MS9B	2	Si	M143	Output at 3.0K lumens/sq.ft:Voc-.50V, Isc-.30mA; C-1.8nf;Rise T-1.0usec max.
18#	MS9BE	2	Si	M148	Output at 3.0K lumens/sq.ft:Voc-.50V, Isc-.30mA; C-1.8nf;Rise T-1.0usec max.
19#	MS10Δ	2	Si	M142	Output at 3.0k lumens/sq.ft:Voc 0.5V 1SC-2.0mA.
20#	MS11A	2	Si	M142	Output at 3 0K lumens/sq.ft:Voc-.50V, Isc-48mA; C-.10uf; Con.Eff.-7.0%
21#	MS11AE	2	Si	M141	Output at 3.0K lumens/sq.ft:Voc-.50V, Isc-54mA; C-.10uf; Con.Eff.-7.0%
22#	MS11B	2	Si	M142	Output at 3.0K lumens/sq.ft:Voc-.55V, Isc-54mA; C-.10uf; Con.Eff.-7.0%
23#	MS11BE	2	Si	M141	Output at 3.0K lumens/sq.ft:Voc-.55V, Isc-60mA; C-.10uf; Con.Eff.-7.0%
24#	MS12	2	Si	M145	Output at 3.0K lumens/sq.ft:Voc-.55V, Isc-120mA; C-.10uf; Con.Eff.-7.0%
25#	MS59B	2	Si	M143	Photo Voltaic;out 1.0k Lumens/sq.ft.min;Isc 65uAmin;Voc 420mVmax;Ct300pFmax.
26#	MS59BE	2	Si	M148	Photo Voltaic;out 1 0k Lumens/sq.ft.min;Isc 65uAmin;Voc 420mVmax;Ct300pFmax.
27#	MS59PCD	2	Si	M143	Photo Voltaic;out 1.0k Lumens/sq.ft.min;Isc 65uAmin;Voc 420mVmax;Ct300pFmax;Id10uAmax.
28#	MS59PCDE	2	Si	M148	Photo Voltaic;out 1.0k Lumens/sq ft.min;Isc 65uAmin;Voc 420mVmax;Ct 300pFmax;Id 10uAmax.
29#	MSP30	2	Si	M71f	Pt-75mW max;Idark-.05uA max;Sens.-.30uA/ft.cdl.;td-1.0usec.
30#	MSP31	2	Si	M71f	Pt-75mW max;Idark-.05uA max;Sens.-.20uA/ft.cdl.;td-1.0usec.
31#	MSP32	2	Si	M71f	Pt-75mW max;Idark-.05uA max;Sens.-.40uA/ft.cdl.;td-1.0usec.
32#	MSP33	2	Si	M71f	Pt-75mW max;Idark-.05uA max;Sens.-.80uA/ft.cdl ;td-1.0usec.
33#	MSP34	2	Si	M71f	Pt-75mW max;Idark-.05uA max;Sens.-1.60uA/ft.cdl.;td-1.0usec.
34#	MSP35	2	Si	M71f	Pt-75mW max;Idark-.05uA max;Sens.-3.0uA/ft.cdl.;td-1.0usec.
35#	OAP12	2	Ge	M130a	Sen -.05uA/Lux; Sens. Area-1 0mm sq.; Vr-30; Ir-3.0mA
36#	OS13	2	Ge	M297a	V-30V max.; Idark-15uA max.; IL-40uA/500Lux
37	PHG1	2	Ge	M17c	Max. Volt.-30V;Typ.Sens.-100mA per Lumen;IDark-10uA typ at 30V.
38	PHG2	2	Ge	M17d	Max. Volt -30V;Typ Sens.-50uA per millilumen,IDark-30uA max. at 20V
39	SAR5-08BPL	2	Si	Z3	N/P; 5 readouts; ISC-250uA; VOC-325mV: (at 500FC).
40	SAR5-10BPL	2	Si	Z3	N/P; 5 readouts; ISC-315uA; VOC-325mV: (at 500FC).
41	SAR6-08BPL	2	Si	Z3	N/P; 6 readouts; ISC-250uA, VOC-325mV: (at 500FC)
42	SAR6-10BPL	2	Si	Z3	N/P, 6 readouts; ISC-315uA; VOC-325mV: (at 500FC).
43	SAR8-08BPL	2	Si	Z3	N/P;8 Readouts;ISC-250uA;VOC-325mV: (at 500FC).
44	SAR8-10BPL	2	Si	Z3	N/P,8 Readouts,ISC-315uA,VOC-325mV. (at 500FC).
45	SAR9-08BPL	2	Si	Z3	N/P; 9 readouts; ISC-250uA; VOC-325mV: (at 500FC).
46	SAR9-10BPL	2	Si	Z3	N/P, 9 readouts; ISC-315uA; VOC-325mV· (at 500FC).
47	SAR10-08BPL	2	Si	Z3	N/P; 10 readouts; ISC-250uA; VOC-325mV: (at 500FC).
48♦#	SBC102	2	Si	M253a	Spectral response peak 560nm;Sensitive area .068sq.in 1.6uA/ft-C Blue Sensitive.
49♦#	SBC111	2	Si	M252a	Spectral response peak 560nm;Sensitive area .273sq.in. 7 0uA/ft-C Blue Sensitive.
50♦#	SBC255	2	Si	M420	Spectral response peak 560nm;Sensitive area .019sq.in. .500uA/ft-C Blue Sensitive
51♦#	SBC510	2	Si	M255	Spectral response peak 560nm;Sensitive area .039sq.in. 1.0uA/ft-C Blue Sensitive
52♦#	SBC530	2	Si		Spectral response peak 560nm;Sensitive area .155sq.in. 4.0uA/ft-C Blue Sensitive.
53♦#	SBC540	2	Si		Spectral response peak 560nm;Sensitive area 310sq.in 8.0uA/ft-C Blue Sensitive
54♦#	SBC541	2	Si	M254	Spectral response peak 560nm;Sensitive area .310sq.in. 8.0uA/ft-C Blue Sensitive
55♦#	SBC2020	2	Si	M475	Spectral response peak650ns;SensitiveArea.009sq.in.200uA/ft-C BlueSensitiveIdark1.0nAat2.0V
56	SGD040A	2	Si	C16p	BV 500V Act. Area .81 mm sq.; Sens .50 uA/uW at .90u; tr3.0ns; Id 1.0nA.
57	SGD040B	2	Si	C16q	BV 500V Act. Area .81 mm sq.; Sens .50 uA/uW at .90u, tr3.0ns; Id 1 0nA.
58	SGD100A	2	Si	Z12	Act Area-5.1mmsq;Sens.-.50uA/uW at .90 microns;Tr-4.0ns;ID-.20uA at 90V.
59	SGD444	2	Si△	M344	Act Area-1 0cm sq;Sens.-.50uA/uW at .90u;Imax-10mA;tr-10nsec
60	SGD444-2	2	Si△	M344a	Act Area-.50cm sq,Sens.-.50uA/uW at .90u;Imax-5.0mA;tr-10nsec.
61	SGD444-4	2	Si△	M344b	Act Area- 25cm sq,Sens - 50uA/uW at 90u;Imax-2.5mA;tr-10nsec.
62♦#	SPD102	2	Si	M253	Sensitive area 068sq in.;Voc .350V;Isc .270mA at 100ft-C.
63♦#	SPD111	2	Si	M252	Sensitive area 273sq.in.;Voc .350V;Isc 1.80mA at 100ft-C.
64♦#	SPD500	2	Si	M255	Sensitive area 021sq in.;Voc .350V;Isc .088mA at 100ft-C.
65▼#	SPD511	2	Si		Sensitive Area .039 sq.in;Phenolic resin case;Voc .340V;Isc .140mA at 100ft-C.
66♦#	SPD530	2	Si		Sensitive area .155sq in.,Voc .350V,Isc .600mA at 100ft-C.
67#	SPD540	2	Si		Isc-1 3mA;Vop-.35V at 100 ft.C.;Sens.Area-.31 sq.in.;Spec.Res.Pk.900Lumens.
68#	SPD541	2	Si	M254	Isc-1.24mA,Vop-.35V at 100 ft.C.;Sens.Area-.31 sq.in.;Spec Res.Pk.900Lumens.
69#	SPD551	2	Si	M342	Isc- 021mA;Vop- 30V at 100 ft.C ;Sens.Area- 006 sq in.;Spec.Res.Pk.900Lumens
70▼#	SPD570	2	Si		Sensitive Area 062 sq.in;Epoxy coating;Voc .350V,Isc .260mA at 100ft-C.
71▼#	SPD580	2	Si		Sensitive Area 156 sq.in;Epoxy coating;Voc 350V;Isc .650mA at 100ft-C
72	SPR5-01	2	Si	Z3	Active Area-0.128x0.08 in.; 5 Readout positions.
73	SPR5-08BPL	2	Si	Z3	P/N; 5 readouts; ISC-250uA; VOC-325mV: (at 500FC)
74	SPR5-10BPL	2	Si	Z3	P/N; 5 readouts; ISC-315uA; VOC-325mV: (at 500FC)
75	SPR6-01	2	Si	Z3	Active Area-0.128x0.08 in.; 6 Readout positions
76	SPR6-08BPL	2	Si	Z3	P/N; 6 readouts; ISC-250uA; VOC-325mV· (at 500FC).
77	SPR6-10BPL	2	Si	Z3	P/N; 6 readouts; ISC-315uA; VOC-325mV: (at 500FC).
78	SPR8-01	2	Si	Z3	Active Area-0.128x0.08 in.; 8 Readout positions.
79	SPR8-08BPL	2	Si	Z3	P/N, 8 readouts; ISC-250uA; VOC-325mV: (at 500FC)
80	SPR8-10BPL	2	Si	Z3	P/N; 8 readouts; ISC-315uA, VOC-325mV: (at 500FC)
81	SPR9-01	2	Si	Z3	Active Area-0.128x0.08 in.; 9 Readout positions
82	SPR9-08BPL	2	Si	Z3	P/N; 9 readouts; ISC-250uA; VOC-325mV· (at 500FC)
83	SPR9-10BPL	2	Si	Z3	P/N, 9 readouts; ISC-315uA, VOC-325mV: (at 500FC)
84	SPR10-08BPL	2	Si	Z3	P/N, 10 readouts; ISC-250uA; VOC-325mV· (at 500FC).
85♦#	SRC200	2	Si	M421	10 Readout Cell;Voc .300V;Isc 57uA at 100ft-C;Epoxy coating.
86▼#	SRC201	2	Si	M340	10 Readout Cell;Voc 300V;Isc 57uA at 100ft-C,Acrylic resin case
87#	SRC291	2	Si	M341	Isc-4.5uA,Vop- 20V at 100 ft.C;Sens.Area-.002 sq.in ;9 Readout Cells.
88♦#	SRC360	2	Si	M422	36 Photodiodes arroy image sensor;Voc .400V;Isc 1.4uA at 100 ft-C
89#	SRC391	2	Si		Isc-4.5uA;Vop-.20V at 100 ft.C;Sens.Area-.002 sq.in.;9x line Readout Cells
90♦#	SRC420	2	Si	M422	42 Photodiodes array image sensor;Voc .400V;Isc 1.4uA at 100ft-C
91♦#	SRC720	2	Si	M422	72 Photodiodes array image sensor;Voc .400V,Isc 1.4uA at 100ft-C.
92	SS300-1	2	Si	C16r	2 pin case, Iload-410uA typ, Idark-20uA max; Vload-410mV typ.
93	SS300-2	2	Si	C16r	3 pin case; Iload-410uA typ; Idark-20uA max; Vload-410mV typ
94	SS300-3	2	Si	C16t	2 pin case; Iload-410uA typ, Idark-20uA max, Vload-410mV typ.
95	SS300-4	2	Si	C16t	3 pin case; Iload-410uA typ; Idark-20uA max, Vload-410mV typ.
96	SSR4-001	2	Si	Z3	4 Readout positions; Dark I-20uA max; Load I-270uA, Load V-270mV.
97	SSR5-001	2	Si	Z3	5 Readout positions; Dark I-20uA max; Load I-270uA; Load V-270mV.
98	SSR6-001	2	Si	Z3	6 Readout positions; Dark I-20uA max, Load I-270uA, Load V-270mV.
99	SSR7-001	2	Si	Z3	7 Readout positions, Dark I-20uA max; Load I-270uA, Load V-270mV.
100	SSR8-001	2	Si	Z3	8 Readout positions; Dark I-20uA max, Load I-270uA, Load V-270mV
101	SSR9-001	2	Si	Z3	9 Readout positions; Dark I-20uA max; Load I-270uA; Load V-270mV
102	SSR10-001	2	Si	Z3	10 Readout positions; Dark I-20uA max; Load I-270uA; Load V-270mV.
103	SSR10-002	2	Si	Z3	10 Readout positions; Dark I-20uA max; Load I-180uA, Load V-270mV.
104	SSRC9-001	2	Si	M322	9 Readout positions, Load I-70uA, Load V-70mV.
105	TIXL51	2	Si$#	C16r	Light Sensor; PT-100mW; IDark-70nA max, ILight-90uA
106	TIXL52	2	Si$#	C16r	Light Sensor; PT-100mW; IDark-50nA max, ILight-25uA
107	TIXL53	2	Si$#	C16r	Light Sensor, PT-100mW; IDark-30nA max; ILight-10uA.
108	TIXL55	2	Si	M399	Avalanche Photodiode;IDark-10nA,VBR-140V,Ct-3pf max;ft-80GHz,Pdiss-100mW
109	TIXL56	2	Si	C16s	Avalanche Photodiode;IDark-10nA,VBR-140V;Ct-3pf max,ft-80GHz,Pdiss-100mW.
110	TIXL57	2	Ge	C16s	Avalanche Photodiode.

SYMBOLS AND CODES EXPLAINED IN INTERPRETER

12. MISCELLANEOUS DIODES

IN ORDER OF (1) USE and (2) TYPE No.

LINE No	2 TYPE No.	1 USE	DESCRIPTION MAT.	DWG. No.	TECHNICAL DATA
1▼	TIXL68	2	Ge	C135	Avalanche;VBR 100V,Active area .010 in dia,Idark 8 0uA;peak wavelength 1.54 um
2▼	TIXL69	2	Si	C16ad	Avalanche;VBR 170V,Active area 060 in dia;Idark 40nA,Pd 100mW,peak wavelength .90um
3#	TP55	2	Ge	M318	Working V -50V; Dark I-10uA max.
4#	TP56	2	Ge	M318	PIV-30V; Dark I-5.0uA max.
5#	TP57	2	Ge	M318	PIV-15V; Dark I-5.0uA max.
6	TP100	2	Ge	C29a	Max Volt.-100V;Spectral Sens.-1 5 microns typ;IDark-8 0uA max at 100V.
7	7UV20	3	ZnS	M384a	Pt 125mW;10MΩ at 1mW/cm2 of 3700 A radiation; 40MΩ at 1mW/cm2 of 2450 A.
8	7163	3	CS	M210	Max Volt-600V DC or AC(pk);Diss-750mW;Illumination-1 0fc;Photo Current-75mA
9#	BP100	3	Si	M70	V- 23V;Photo Sens -35nA/Lx max;Idark-16uA max,Cj-4 0nF
10#	BPY11	3	Si	M70	V- 30V;Photo Sens -40nA/Lx max;Idark-10uA max;Cj-4 0nF
11#	BPY43	3	Si	M269	V- 27V;Photo Sens.-15nA/Lx max;IR-5.0uA max.
12#	BPY44	3	Si	M269	V- 33V,Photo Sens -20nA/Lx max;IR-1 0uA max
13#	BPY46	3	Si	M413	V- 45V,Photo Sens.-900nA/Lx max;ES- 85um.
14#	BPY47	3	Si	M413a	V- 45V;Photo Sens.-900nA/Lx max;ES-.85um
15#	BPY48	3	Si	M272	V-.45V;Photo Sens.-300nA/Lx max;ES-.85um.
16#	BPY63	3	Si	M413b	V-.45V;Photo Sens.-450nA/Lx max;ES-.85um
17#	BPY64	3	Si	M413c	V- 45V;Photo Sens -160nA/Lx max,ES-.85um
18	CL5M2	3	CS	M384	Pt-500mW,R at 2FC-55kohms;Pk Spectral Response-5150A;Max Voltage-250V
19	CL5M2L	3	CS	M384	Pt-500mW;R at 2FC-9.0kohms,Pk Spectral Response-5150A;Max.Voltage-170V
20	CL5M3	3	CdSe	M384	Pt-500mW;R at 2FC-7 2kohms;Pk Spectral Response-7350A;Max.Voltage-250V.
21	CL5M4	3	CdSe	M384	Pt-500mW;R at 2FC-1.5kohms;Pk Spectral Response-6900A;Max.Voltage-250V.
22	CL5M4L	3	CdSe	M384	Pt-500mW;R at 2FC-250 ohms;Pk Spectral Response-6900A;Max.Voltage-170V.
23	CL5M5	3	CS	M384	Pt-500mW;R at 2FC-9.0kohms;Pk Spectral Response-5500A;Max.Voltage-250V
24	CL5M5L	3	CS	M384	Pt-500mW,R at 2FC-1.5kohms;Pk Spectral Response-5500A;Max.Voltage-170V.
25	CL5M7	3	CS	M384	Pt-500mW;R at 2FC-7 2kohms;Pk Spectral Response-6150A;Max.Voltage-250V.
26	CL502	3	CS	M385	Pt-250mW;R at 2FC-55kohms;Pk Spectral Response-5150A;Max Voltage-250V.
27	CL502L	3	CS	M385	Pt-250mW;R at 2FC-9.0kohms;Pk Spectral Response-5150A;Max Voltage-170V
28	CL503	3	CdSe	M385	Pt-250mW;R at 2FC-7.2kohms;Pk.Spectral Response-7350A;Max Voltage-250V.
29	CL504	3	CdSe	M385	Pt-250mW;R at 2FC-1.5kohms;Pk.Spectral Response-6900A;Max Voltage-250V
30	CL504L	3	CdSe	M385	Pt-250mW;R at 2FC-250 ohms;Pk Spectral Response-6900A;Max Voltage-170V
31	CL505	3	CS	M385	Pt-250mW,R at 2FC-9.0kohms;Pk Spectral Response-5500A;Max Voltage-250V
32	CL505L	3	CS	M385	Pt-250mW;R at 2FC-1 5kohms;Pk Spectral Response-5500A;Max Voltage-170V
33	CL507	3	CS	M385	Pt-250mW;R at 2FC-7 2kohms;Pk Spectral Response-6150A;Max Voltage-250V.
34	CL602	3	CS	M385a	Pt-75mW;R at 2FC-1.0Mohms;Pk.Spectral Response-5150A;Max Voltage-300V.
35	CL603	3	CdSe	M385a	Pt-75mW;R at 2FC-133kohms;Pk Spectral Response-7350A;Max Voltage-300V
36	CL603A	3	CdSe	M385a	Pt-75mW;R at 2FC-75Kohms;Pk Spectral Response-7350A;Max Voltage-300V.
37	CL603AL	3	CdSe	M385a	Pt-75mW;R at 2FC-3.5kohms;Pk Spectral Response-7350A;Max Voltage-170V.
38	CL604	3	CdSe	M385a	Pt-75mW;R at 2FC-30kohms;Pk.Spectral Response-6900A;Max Voltage-300V.
39	CL604L	3	CdSe	M385a	Pt-75mW;R at 2FC-1.5kohms;Pk Spectral Response-6900A;Max Voltage-170V
40	CL604M	3	CdSe	M385a	Pt-75mW;R at 2FC-7.5kohms;Pk Spectral Response-6900A;Max Voltage-250V
41	CL605	3	CS	M385a	Pt-75mW;R at 2FC-166kohms;Pk Spectral Response-5500A;Max Voltage-300V
42	CL605L	3	CS	M385a	Pt-75mW;R at 2FC-7 5kohms;Pk Spectral Response-5500A;Max Voltage-170V
43	CL607	3	CS	M385a	Pt-75mW;R at 2FC-133kohms;Pk Spectral Response-6150A;Max Voltage-300V.
44	CL607L	3	CS	M385a	Pt-75mW;R at 2FC-3.5kohms;Pk Spectral Response-6150A,Max Voltage-170V.
45	CL702	3	CS	M384a	Pt-125mW;R at 2FC-1 0Mohms;Pk Spectral Response-5150A;Max Voltage-300V.
46	CL702L2	3	CS	M384d	Dual Elements;Pt-125mW;R at 2FC-20kohms each;Pk Spectral Response-5150A.
47	CL702L	3	CS	M384a	Pt-125mW,R at 2FC-20kohms;Pk Spetral Response 5150A;V max-100V.
48	CL703	3	CdSe	M384a	Pt-125mW;R at 2FC-133kohms;Pk.Spectral Response-7350A,Max Voltage-300V.
49	CL703/2	3	CdSe	M384c	Dual Elements;Pt-125mW;R at 2FC-50kohms each;Pk.Spectral Response-7350A.
50	CL703A	3	CdSe	M384a	Pt-125mW;R at 2FC-67kohms;Pk.Spectral Response-7350A;Max Voltage-300V
51	CL703C	3	CdSe	M384a	Chopper;Pt-125mW;R at 2FC-50kohms;Pk.Spectral Response-7350A;Tr-.4nsec;Tf-3nsec
52	CL703CL	3	CdSe	M384a	Chopper;Pt-125mW;R at 2FC-2.3kohms;Pk.Spectral Response-7350A;Tr-.4nsec;Tf-3nsec
53	CL703L2	3	Cdse	M384d	Dual Elements; Pt-125mW; R at 2FC -6.5kΩ each; Pk Spectral Response - 7350A
54	CL703L	3	CdSe	M384a	Pt-125mW,R at 2FC-2 7kohms;Pk Spectral Response 7350A;V max-100V.
55	CL703M	3	CdSe	M384a	Pt-125mW;R at 2FC-30kohms,Pk Spectral Response-7350A;Max.Voltage-250V
56	CL704	3	CdSe	M384a	Pt-125mW;R at 2FC-30kohms;Pk.Spectral Response-6900A;Max Voltage-300V
57	CL704L2	3	CdSe	M384d	Dual Elements,Pt-125mW;R at 2FC-1 5kohms each;Pk.Spectral Response-6900A
58	CL704L	3	CdSe	M384a	Pt-125mW,R at 2FC-600 ohms;Pk Spectral Response 6900A;V max-100V.
59	CL705	3	CS	M384a	Pt-125mW;R at 2FC-166kohms;Pk.Spectral Response-5500A;Max Voltage-300V
60	CL705/2	3	CS	M384c	Dual Elements,Pt-125mW;R at 2FC-166kohms each;Pk Spectral Response-5500A.
61	CL705HL2	3	CS	M384d	Dual Elements;Pt-125mW;R at 2FC-67 5kohms;Pk Spectral Response 5500A
62	CL705HL	3	CS	M384a	Pt-125mW;R at 2FC-28kohms;Pk Spectral Response 5500A;V max-100V
63	CL705L2	3	CS	M384d	Dual Elements,Pt-125mW;R at 2FC-7.5kohms each;Pk.Spectral Response-5500A
64	CL705L	3	CS	M384a	Pt-125mW,R at 2FC-3.3kohms;Pk Spectral Response 5500A;V max-100V.
65	CL707	3	CS	M384a	Pt-125mW;R at 2FC-133kohms;Pk Spectral Response-6150A;Max.Voltage-300V
66	CL707H	3	CS	M384a	Pt-125mW;R at 2FC-500kohms;Pk Spectral Response-6200A;Max.Voltage-300V
67	CL707HL	3	CS	M384a	Pt-125mW;R at 2FC-10kohms;Pk Spectral Response 6200A;V max-100V
68	CL707HM	3	CS	M384a	Pt-125mW;R at 2FC-100kohms,Pk Spectral Response-6200A;Max Voltage-250V
69	CL707L	3	CS	M384a	Pt-125mW;R at 2FC-2.7kohms;Pk Spectral Response 6150A;V max-100V.
70	CL902	3	CS	M384b	Pt-50mW;R at 2FC-1 0mohms;Pk Spectral Response-5150A;Max Voltage-250V.
71	CL902L	3	CS	M384b	Pt-50mW;R at 2FC-67kohms;Pk Spectral Response-5150A;Max.Voltage-100V.
72	CL903	3	CdSe	M384b	Pt-50mW;R at 2FC-133kohms;Pk Spectral Response-7350A;Max Voltage-250V.
73	CL903A	3	CdSe	M384b	Pt-50mW,R at 2FC-67kohms;Pk.Spectral Response-7350A;Max Voltage-250V
74	CL903C	3	CdSe	M384a	Chopper;Pt-50mW;R at 2FC-50kohms;Pk.Spectral Response-7350A;Tr- 4nsec;Tf-3nsec.
75	CL903L	3	CdSe	M384b	Pt-50mW;R at 2FC-6.0kohms;Pk Spectral Response-7350A;Max.Voltage-100V.
76	CL903N	3	CdSe	M384b	Pt-50mW;R at 2FC-66kohms;Pk Spectral Response-7350A;Max.Voltage-100V.
77	CL904	3	CdSe	M384b	Pt-50mW;R at 2FC-30kohms;Pk.Spectral Response-6900A;Max Voltage-250V.
78	CL904L	3	CDSE	M384b	Pt-50mW,R at 2FC-2.0kohms;Pk Spectral Response-6900A;Max Voltage-100V
79	CL904N	3	CdSe	M384b	Pt-50mW;R at 2FC-15kohms;Pk Spectral Response-6900A;Max Voltage-100V.
80	CL905	3	CS	M384b	Pt-50mW;R at 2FC-166kohms;Pk.Spectral Response-5500A;Max Voltage-250V.
81	CL905HL	3	CS	M384b	Pt-50mW;R at 2FC-100kohms;Pk Spectral Response-5500A;Max.Voltage-100V.
82	CL905HLL	3	CS	M384b	Pt-50mW;R at 2FC-11kohms;Pk.Spectral Response-5500A;Max Voltage-60V
83	CL905HN	3	CS	M384b	Pt-50mW;R at 2FC-700kohms;Pk Spectral Response-5500A;Max.Voltage-100V.
84	CL905L	3	CS	M384b	Pt-50mW;R at 2FC-10Kohms;Pk Spectral Response-5500A;Max.Voltage-100V
85	CL905N	3	CS	M384b	Pt-50mW;R at 2FC-83kohms;Pk Spectral Response-5500A;Max Voltage-100V
86	CL907	3	CS	M384b	Pt-50mW;R at 2FC-133kohms;Pk.Spectral Response-6150A;Max Voltage-250V.
87	CL907HL	3	CS	M384b	Pt-50mW;R at 2FC-24kohms;Pk Spectral Response-6200A;Max.Voltage-100V.
88	CL907HN	3	CS	M384b	Pt-50mW;R at 2FC-300kohms;Pk Spectral Response-6200A;Max.Voltage-100V.
89	CL907L	3	CS	M384b	Pt-50mW;R at 2FC-6 0kohms;Pk Spectral Response-6150A;Max.Voltage-100V
90	CL907N	3	CS	M384b	Pt-50mW;R at 2FC-66kohms;Pk Spectral Response-6150A;Max Voltage-100V.
91#	LDR05	3	CS	M438	Pt- 20W;R-300 ohms max;Max. peak Votage-150V
92#	LDR07	3	CS	M439	Pt-.20W,R-300 ohms max;Max peak Voltage-150V.
93#	MSP3	3	Si	M432	Pt-.10W;Pk.Spect.Resp.-9500A;Dark Current-3 0uA
94#	MSP6	3	Si	M432	Pt- 10W;Pk.Spect Resp.-9500A,Dark Current-20uA.
95#	ORP10	3	InSb	Z3	Spectral Response visible to 8.0 microns
96#	ORP11	3	CdS	M135	Spectral Response in red and infra-red region
97#	ORP13	3	InSb	Z3	Spectral Response visible to 5.4 microns
98	ORP30	3	CdS	M133	Volt.max-350V;Sens 30mA/10V at 4 6fc;Sens area- 70sq.in
99#	ORP50	3	CdS	M136	Volt max -175V; Sens.-2 0 ohms at 5 0Ft-C; Rdark-8 7megohms.
100#	ORP52	3	CS	M195	Pdiss-400mW; Vdc-200 max; Res.-1 7kohms; Sens Area-1.1 sq.cm.
101#	ORP60	3	CdS	M134	Volt max -350V; Sens.-.10 ohms at 5 0Ft-C; Rdark-200mohms.
102#	ORP61	3	CdS	M134a	Volt. max -350V,Sens - 10Ω at 5.0Ft-C;Rdark-200megohms
103	ORP62	3	CdS	M137	Side Sens; .14mA at 30V; 5.0fc; Power-100mW
104	ORP63	3	CdS	M138	Side Sens; 1.6mA at 10V; 5.0fc; Power-150mW.
105	ORP90	3	CdS	M194	Volt max-350V; Sens 10mA/10V; 5.0fc; Sens area-.28 sq. in.
106#	ORP93	3	CdS	M194	I-6 0mA at 10V; Spectral Response .40-.80 microns
107#	ORP94	3	CdS	M194	I-50mA at 10V; Spectral Response 40- 80 microns
108#	PCV50A	3	CdSe	M74c	Max Voltage 400V;I max 50mA,Dark Res 4 0MΩ at 1000 lux 500Ω;Pt 1 0W.
109#	PCV56	3	CdSe	M417	Max Voltage-50V;I max.-30mA,Dark Res -5 0Mohms;at 1000 lux-3000 ohms;Pt-25mW
110#	PCV58	3	CdSe	M252b	Pt 1 0W,Dark Res 100kΩ;at 1000/ux40Ω,max voltage 350V,Imax 50mA.

SYMBOLS AND CODES EXPLAINED IN INTERPRETER

12. MISCELLANEOUS DIODES

IN ORDER OF (1) USE and (2) TYPE No.

LINE No.	2 TYPE No.	1 USE	DESCRIPTION MAT	DWG. No.	TECHNICAL DATA
1#	PCV60	3	CdSe	M71j	Max Voltage-350V;I max -30mA;Dark Res -35Mohms,at 1000 lux-4000 ohms,Pt-75mW
2#	PCV67	3	CdSe	M417a	Max Voltage-350V;I max.-3.0mA;Dark Res -35Mohms;at 1000 lux-4000 ohms,Pt-75mW
3#	PCV68	3	CdSe	M384e	Max Voltage-250V;I max -20mA,Dark Res.-3 0Mohms;at 1000 lux-400 ohms;Pt-.25W
4#	PCV69	3	CdSe		Max Voltage-75V,I max -20mA;Dark Res -1 0Mohms;at 1000 lux-40 at 160 ohms
5#	PCV70	3	CdSe	M417b	Max Voltage-75V;I max.-20mA;Dark Res -.10Mohms;at 1000 lux-25 at 100 ohms
6#	PCV71	3	CdSe	M417c	Max Voltage-50V;I max.-2.0mA;Dark Res.-5.0Mohms;at 1000 lux-2 at 8kohms;Pt-15mW
7#	PCV76	3	CdSe	M74d	Pt 200mW;Dark Res 500kohms;at 1000 lux 70Ω;Max.Voltage 250V;Imax 20mA.
8#	PCV85	3	CdSe	M417d	Max Voltage-250V,I max.-20mA;Dark Res.-2.0Mohms;at 1000 lux-400 ohms;Pt-.25W.
9#	PCV88	3	CdSe	M417e	Max Voltage-75V,I max -10mA;Dark Res.-500kohms; at 1000 lux-400 ohms;Pt-75mW
10#	PCV97	3	CdSe	M194a	Max Voltage-400V;I max.-50mA;Dark Res.-10Mohms,at 1000 lux-100 ohms,Pt-1.0W
11#	PCV104	3	CdSe	M417e	Max Voltage-350V;I max -3.0;Dark Res.-100Mohms;at 1000 lux-4000 ohms;Pt-75mW
12#	PRV94	3	CdSe	M461	Cell;Max Voltage 250V;I max 20mA;Pt 100mW;Lamp;Max Voltage 14V;I max 30mA (incandescent).
13#	PRV100	3	CdSe	M461	Cell;Max Voltage 250V;I max 20mA;Pt 120mW;Lamp,Max Voltage 50V,I max 500uA (neon).
14	RPY14	3	CdS	M73	Volt max-75V; Sens 1.6mA/10V
15#	RPY15	3	CS	M265	Pd-400mW,Vmax-210V A.C;R-1.7 kohms;Sensitive area-1.25cm.sq.
16	RPY17	3	CdS	M73	Volt max-400V; Sens .60mA/10V.
17	RPY18	3	CdS	M74	Volt max-75V; Sens 6.0mA/10V
18#	RPY19	3	CdS	M74	Volt max.-400V; Sens -.70mA/Ft-C at 5.0Ft-C.
19#	RPY20	3	CS	M251	Vmax.-400V; Sens area- 465 sq.in ; Rdark-6 5Mohms min., R at 5.0fc-1 5kohms
20#	RPY23	3	InSb	Z3	Spectral Response 1000-8000 microns
21#	RPY33	3	CS	M275	Pt-10mW;R-1500 ohms typ;Max.Voltage-25V.
22#	RPY41	3	CS	M73	Pt-50mW;R-4800 ohms max;Max.Voltage-10V.
23#	RPY43	3	CS	M440	Pt-.75W,R-4 5kohms max;Max.Voltage-400V
24	SS400-1	3	Si	C76	Idark-10uA max;Vout-300mV min;Illum-1250fc;Rl-1000 ohms.
25	SS400-2	3	Si	C76	Idark-20uA max;Vout-300mV min;Illum-1250fc;Rl-1000 ohms.
26	SS400-3	3	Si	C76	Idark-10uA max,Vout-250mV min;Illum-1250fc,Rl-1000 ohms
27	SS400-4	3	Si	C76	Idark-20uA max;Vout-250mV min;Illum-1250fc;Rl-1000 ohms.
28	SS400-5	3	Si	C76	Idark-50uA max,Vout-250mV min;Illum-1250fc;Rl-100 ohms
29	SS400-6	3	Si	C76	Vout-200mV min;Illum-1250fc;Rl-1000 ohms.
30	SS400-7	3	Si	C76	Vout 200mVmin; Illum 1250 FTC; Rl 1.0kΩ.
31	SS500	3	Si		If 350uAmin; Vl 350mVmin; Idark 20uAmax(P/N); Rl 1.0kΩ.
32	TIL203	3	GA	M580	Luminance at IF 20mA; 750fL typ; VF 2.0V max; Lambda peak 6600 Angstroms.
33	TIL204	3	GA	M580a	Luminance at IF 20mA; 750fL typ; VF 2.0Vmax; lambda peak 6600 Angstroms
34	TIL205	3	GA	M494a	Luminance at IF 20mA; 750fL typ; VF 2 0Vmax; lambda peak 6600 Angstroms.
35	TIL206	3	GA	M494b	Luminance at IF 20mA; 750fL typ; VF 2 0Vmax; lambda peak 6600 Angstroms
36	TIL207	3	GA	M581	Luminance at IF 20mA; 750fL typ; VF 2.0Vmax; lambda peak 6600 Angstroms
37	TIL208	3	GA	M581a	Luminance at IF 20mA; 750fL typ; VF 2.0Vmax; lambda peak 6600 Angstroms
38#	TP60	3	Si	M270	V- 44V;Photo Sens.-1000nA/Lx max;ES- 85um.
39#	TP61	3	Si	M271	V-.44V;Photo Sens.-100nA/Lx max;ES-.85um.
40♦	VT10L	3	CS	M564	Pd 200mW;Peak Spectral Response 5650A;2F.C Res 1.6kΩ;Dark Res 100kΩ min;Volt 200V max.
41♦	VT14L	3	CdSe	M564	Pd 200mW;Peak Spectral Response 6750A;2F.C. Res. 600Ω;Dark Res. 100kΩ min;Volt 200V max
42♦	VT23L	3	CS	M554c	Pd 50mW;Peak Spectral Response 5500A;2F.C. Res. 11kΩ;Dark Res. 1.0MΩ min;Volt 100V max.
43♦	VT30L	3	CS	M554	Pd 125mW;Peak Spectral Response 5650A;2F.C Res 1 8kΩ;Dark Res 100kΩ min;Volt 200V max.
44♦	VT32L	3	CS	M554	Pd 125mW;Peak Spectral Response 5150A;2F.C. Res. 1.95kΩ;Dark Res. 100kΩ min;Volt 200V max.
45♦	VT34L2	3	CdSe	M554a	Dual Element;Pd 50mW;Pk Spect.Resp. 6750A;2F.C.Res. 1.5kΩ;Dark Res. 100kΩ min;Volt 200V max.
46♦	VT34L	3	CdSe	M554	Pd 125mW;Peak Spectral Response 6750A;2F.C. Res 600Ω;Dark Res. 100kΩ min;Volt 200V max.
47♦	VT50L	3	CS	M554b	Pd 500mW;Peak Spectral Response 5650A;2F.C.Res 1.3kΩ;Dark Res. 100kΩ min;Voltage 200V max
48♦	VT51L	3	CdSe	M554b	Pd 500mW;Peak Spectral Response 7350A;2F.C.Res 700Ω;Dark Res. 100kΩ min;Voltage 200V max.
49♦	VT54L	3	CdSe	M554b	Pd 500mW;Peak Spectral Response 6750A;2F.C.Res 250Ω;Dark Res. 100kΩ min;Voltage 200V max.
50▼	VT70L	3	CS	M556	Pd 250mW;Peak Spectral Response 5650A;2F.C.Res 1 6kΩ;Dark Res 1.0MΩ min;Volt. 200V max
51▼	VT74L	3	CdSe	M556	Pd 250mW,Peak Spectral Response 6750A;2F.C.Res 450Ω;Dark Res 500kΩ min;Volt. 100V max.
52♦	VT82L	3	CS	M556a	Pd 175mW;Peak Spectral Response 5150A;2F.C.Res 1 9kΩ;Dark Res. 100kΩ min;Voltage 100V max
53▼	VT93L	3	CS	M556b	Pd 80mW;Peak Spectral Response 5500A;2F.C.Res 11kΩ;Dark Res 1.0MΩ min;Volt. 100V max.
54♦	VT101	3	CS	M564	Pd 200mW;Peak Spectral Response 5650A;2FC Res3.0kΩ;Dark Res. 300kΩmin;Voltage 200V max.
55♦	VT101H	3	CS	M564	Pd 200mW;Peak Spectral Response 5650A;2F.C.Res 6.0kΩ;Dark Res. 1.0MΩ min;Voltage 200V max.
56♦	VT102	3	CS	M564	Pd 200mW;Peak Spectral Response 5650A;2F.C.Res 16kΩ;Dark Res. 5.0MΩ min;Voltage 300V max.
57♦	VT102L	3	CS	M564	Pd 200mW;Peak Spectral Response 5650A;2F.C.Res 9.0kΩ;Dark Res. 5.0MΩ min;Voltage 300V max.
58♦	VT103	3	CS	M564	Pd 200mW;Peak Spectral Response 5650A;2F.C.Res 66kΩ;Dark Res 20MΩ min;Voltage 300V max.
59♦	VT103L	3	CS	M564	Pd 200mW;Peak Spectral Response 5650A;2F.C.Res 33kΩ;Dark Res. 10MΩ min;Voltage 300V max.
60♦	VT104	3	CS	M564	Pd 200mW;Peak Spectral Response 5650A;2F.C.Res 136kΩ;Dark Res. 50MΩ min;Voltage 300V max.
61♦	VT111	3	CdSe	M564	Pd 200mW;Peak Spectral Response 7350A;2F.C.Res 2.3kΩ;Dark Res. 500kΩ min;Voltage 200V max.
62♦	VT111H	3	CdSe	M564	Pd 200mW;Peak Spectral Response 7350A;2F.C.Res 4.6kΩ;Dark Res. 1.0MΩ min;Voltage 200V max.
63♦	VT112	3	CdSe	M564	Pd 200mW;Peak Spectral Response 7350A;2F.C.Res 22kΩ;Dark Res. 50MΩ min;Voltage 300V max.
64♦	VT112L	3	CdSe	M564	Pd 200mW;Peak Spectral Response 7350A;2F.C.Res 9.2kΩ;Dark Res 5.0MΩ min;Voltage 300V max
65♦	VT113	3	CdSe	M564	Pd 200mW;Peak Spectral Response 7350A;2F.C Res 60kΩ;Dark Res 100MΩ min;Voltage 300V max.
66♦	VT113L	3	CdSe	M564	Pd 200mW,Peak Spectral Response 7350A;2F.C.Res 44kΩ;Dark Res. 100MΩ min;Voltage 300V max.
67♦	VT121	3	CS	M564	Pd 200mW;Peak Spectral Response 5150A;2F.C.Res 3.0kΩ;Dark Res. 300kΩ min;Voltage 200V max.
68♦	VT121H	3	CS	M564	Pd 200mW;Peak Spectral Response 5150A;2F.C.Res 6.0kΩ;Dark Res. 1.0MΩ min;Voltage 200V max.
69♦	VT122	3	CS	M564	Pd 200mW;Peak Spectral Response 5150A;2F.C.Res 16kΩ;Dark Res. 5.0MΩ min;Voltage 300V max.
70♦	VT122L	3	CS	M564	Pd 200mW;Peak Spectral Response 5150A;2F.C.Res 9.0kΩ;Dark Res. 5.0MΩ min;Voltage 300V max.
71♦	VT123	3	CS	M564	Pd 200mW;Peak Spectral Response 5150A;2F.C.Res 66kΩ;Dark Res. 20MΩ min;Voltage 300V max.
72♦	VT123L	3	CS	M564	Pd 200mW;Peak Spectral Response 5150A;2F.C.Res 32kΩ;Dark Res. 10MΩ min;Voltage 300V max.
73♦	VT124	3	CS	M564	Pd 200mW;Peak Spectral Response 5150A;2F.C.Res 136kΩ;Dark Res. 50MΩ min;Voltage 300V max.
74♦	VT132	3	CS	M564	Pd 200mW;Peak Spectral Response 5150A;2F.C.Res 10kΩ;Dark Res. 5.0MΩ min;Voltage 200V max.
75♦	VT133	3	CS	M564	Pd 200mW;Peak Spectral Response 5150A;2F.C.Res 28kΩ;Dark Res. 10MΩ min;Voltage 200V max.
76♦	VT133L	3	CS	M564	Pd 200mW;Peak Spectral Response 5150A;2F.C.Res 14kΩ;Dark Res. 5.0MΩ min;Voltage 200V max
77♦	VT141	3	CdSe	M564	Pd 200mW;Peak Spectral Response 6750A;2F.C.Res 1.2kΩ;Dark Res. 500kΩ min;Voltage 200V max
78♦	VT141H	3	CdSe	M564	Pd 200mW;Peak Spectral Response 6750A;2F.C.Res 2.4kΩ;Dark Res. 1.0MΩ min;Voltage 200V max.
79♦	VT142	3	CdSe	M564	Pd 200mW;Peak Spectral Response 6750A;2F.C.Res 7.0kΩ;Dark Res. 5.0MΩ min;Voltage 300V max.
80♦	VT142L	3	CdSe	M564	Pd 200mW;Peak Spectral Response 6750A;2F.C.Res 4.8kΩ;Dark Res. 1 0MΩ min;Voltage 300V max.
81♦	VT143	3	CdSe	M564	Pd 200mW;Peak Spectral Response 6750A;2F.C.Res 28kΩ;Dark Res. 10MΩ min;Voltage 300V max.
82♦	VT143L	3	CdSe	M564	Pd 200mW;Peak Spectral Response 6750A;2F.C.Res 14kΩ;Dark Res. 10MΩ min;Voltage 300V max
83♦	VT201	3	CS	M554c	Pd 50mW;Peak Spectral Response 5650A;2F.C.Res 4.3kΩ;Dark Res. 500kΩ min;Voltage 100V max.
84♦	VT202	3	CS	M554c	Pd 50mW;Peak Spectral Response 5650A;2F.C.Res 8.0kΩ;Dark Res. 750kΩ min;Voltage 100V max.
85♦	VT202H	3	CS	M554c	Pd 50mW;Peak Spectral Response 5650A;2F.C.Res 15kΩ;Dark Res 1.0MΩ min;Voltage 100V max.
86♦	VT203	3	CS	M554c	Pd 50mW;Peak Spectral Response 5650A;2F.C.Res 22kΩ;Dark Res. 5.0MΩ min;Voltage 300V max.
87♦	VT203H	3	CS	M554c	Pd 50mW;Peak Spectral Response 5650A;2F.C.Res 44kΩ;Dark Res. 5.0MΩ min;Voltage 300V max.
88♦	VT204	3	CS	M554c	Pd 50mW;Peak Spectral Response 5650A;2F.C.Res 110kΩ;Dark Res. 20MΩ min;Voltage 300V max.
89♦	VT204L	3	CS	M554c	Pd 50mW;Peak Spectral Response 5650A;2F.C.Res 88kΩ;Dark Res. 10MΩ min;Voltage 300V max.
90♦	VT205	3	CS	M554c	Pd 50mW;Peak Spectral Response 5650A;2F.C.Res 1.0MΩ;Dark Res. 200MΩ min;Voltage 300V max.
91♦	VT211	3	CdSe	M554c	Pd 50mW;Peak Spectral Response 7350A;2F.C.Res 2.3kΩ;Dark Res. 500kΩ min;Voltage 100V max
92♦	VT211H	3	CdSe	M554c	Pd 50mW;Peak Spectral Response 7350A;2F.C.Res 3.5kΩ;Dark Res. 1.0MΩ min;Voltage 100V max.
93♦	VT212	3	CdSe	M554c	Pd 50mW;Peak Spectral Response 7350A;2F.C.Res 7.8kΩ;Dark Res. 5.0MΩ min;Voltage 100V max.
94♦	VT212L	3	CdSe	M554c	Pd 50mW;Peak Spectral Response 7350A;2F.C.Res 6.0kΩ;Dark Res. 5.0MΩ min;Voltage 100V max
95♦	VT213	3	CdSe	M554c	Pd 50mW;Peak Spectral Response 7350A;2F.C.Res 22kΩ;Dark Res. 50MΩ min;Voltage 300V max.
96♦	VT213H	3	CdSe	M554c	Pd 50mW;Peak Spectral Response 7350A;2F.C.Res 32kΩ;Dark Res. 50MΩ min;Voltage 300V max.
97♦	VT213L	3	CdSe	M554c	Pd 50mW;Peak Spectral Response 7350A;2F.C.Res 16kΩ;Dark Res. 10MΩ min;Voltage 100V max.
98♦	VT214	3	CdSe	M554c	Pd 50mW;Peak Spectral Response 7350A;2F.C.Res 140kΩ;Dark Res. 200MΩ min;Voltage 300V max.
99♦	VT214L	3	CdSe	M554c	Pd 50mW;Peak Spectral Response 7350A;2F.C.Res 64kΩ;Dark Res. 100MΩ min;Voltage 300V max.
100♦	VT221	3	CdSe	M554c	Pd 50mW;Peak Spectral Response 5150A;2F.C.Res 6.8kΩ;Dark Res. 750kΩ min;Voltage 100V max.
101♦	VT222	3	CS	M554c	Pd 50mW;Peak Spectral Response 5150A;2F.C.Res 10kΩ;Dark Res. 1.0MΩ min;Voltage 100V max
102♦	VT222H	3	CS	M554c	Pd 50mW;Peak Spectral Response 5150A;2F.C.Res 20kΩ;Dark Res. 1.0MΩ min;Voltage 100V max.
103♦	VT223	3	CS	M554c	Pd 50mW;Peak Spectral Response 5150A;2F.C.Res 40kΩ;Dark Res. 5.0MΩ min;Voltage 300V max
104♦	VT223H	3	CS	M554c	Pd 50mW;Peak Spectral Response 5150A;2F.C.Res 65kΩ;Dark Res. 5.0MΩ min;Voltage 300V max
105♦	VT224	3	CS	M554c	Pd 50mW;Peak Spectral Response 5150A;2F.C.Res 500kΩ;Dark Res. 50MΩ min;Voltage 300V max.
106♦	VT224L	3	CS	M554c	Pd 50mW;Peak Spectral Response 5150A;2F.C.Res 80kΩ;Dark Res 10MΩ min;Voltage 300V max.
107♦	VT225	3	CS	M554c	Pd 50mW;Peak Spectral Response 5150A;2F.C.Res 1.0MΩ;Dark Res. 200MΩ min;Voltage 300V max.
108♦	VT231	3	CS	M554c	Pd 50mW;Peak Spectral Response 5500A;2F.C.Res 22kΩ;Dark Res. 1.0MΩ min;Voltage 100V max.
109♦	VT232	3	CS	M554c	Pd 50mW;Peak Spectral Response 5500A;2F.C.Res 100kΩ;Dark Res 50MΩ min;Voltage 100V max.
110♦	VT233	3	CS	M554c	Pd 50mW;Peak Spectral Response 5500A;2F.C.Res 350kΩ;Dark Res. 100MΩ min;Voltage 100V max.

12. MISCELLANEOUS DIODES

IN ORDER OF (1) USE and (2) TYPE No.

LINE No.	2 TYPE No.	1 USE	DESCRIPTION MAT.	DWG. No.	TECHNICAL DATA
1♦	VT233L	3	CS	M554c	Pd 50mW,Peak Spectral Response 5500A;2F C.Res 150kΩ;Dark Res. 50MΩ min,Voltage 100V max.
2♦	VT234	3	CS	M554c	Pd 50mW,Peak Spectral Response 5500A;2F C Res 700kΩ;Dark Res. 200MΩ min;Voltage 100V max.
3♦	VT235	3	CS	M554c	Pd 50mW,Peak Spectral Response 5500A;2F C.Res 1 4MΩ;Dark Res. 200MΩ min;Voltage 300V max.
4♦	VT241	3	CS	M554c	Pd 50mW;Peak Spectral Response 6750A;2F.C.Res 2.0kΩ,Dark Res. 500kΩ min,Voltage 100V max.
5♦	VT241H	3	CdSe	M554c	Pd 50mW;Peak Spectral Response 6750A;2F C.Res 4.0kΩ;Dark Res 1.0MΩ min;Voltage 100V max
6♦	VT242	3	CdSe	M554c	Pd 50mW;Peak Spectral Response 6750A;2F C.Res 15kΩ;Dark Res. 10MΩ min;Voltage 100V max
7♦	VT242H	3	CdSe	M554c	Pd 50mW;Peak Spectral Response 6750A;2F.C Res 30kΩ;Dark Res. 10MΩ min;Voltage 300V max
8♦	VT242L	3	CdSe	M554c	Pd 50mW;Peak Spectral Response 6750A;2F.C.Res 8.0kΩ;Dark Res 1.0MΩ min;Voltage 100V max
9♦	VT301	3	CS	M554	Pd 125mW;Peak Spectral Response 5650A;2F C.Res 3.0kΩ;Dark Res. 200kΩ min;Voltage 200V max
10♦	VT301H	3	CS	M554	Pd 125mW,Peak Spectral Response 5650A;2F.C.Res 6.0kΩ;Dark Res 1.0MΩ min,Voltage 200V max
11♦	VT302	3	CS	M554	Pd 125mW;Peak Spectral Response 5650A;2F.C.Res 16kΩ;Dark Res. 5.0MΩ min,Voltage 300V max.
12♦	VT302-2	3	CS	M554a	Dual Element;Pd 50mW;Peak Spect.Res. 5650A;2F.C Res 16kΩ;Dark Res. 5.0MΩ min;Volt 200V max
13♦	VT302L	3	CS	M554	Pd 125mW;Peak Spectral Response 5650A;2F.C Res 10kΩ;Dark Res. 1 0MΩ min;Voltage 300V max.
14♦	VT303	3	CS	M554	Pd 125mW;Peak Spectral Response 5650A;2F.C.Res 70kΩ;Dark Res. 10MΩ min,Voltage 300V max
15♦	VT303L2	3	CS	M554a	Dual Element;Pd 50mW;Peak Spect.Res. 5650A,2F.C.Res 32kΩ;Dark Res. 5.0MΩ min;Volt 200V max
16♦	VT303L	3	CS	M554	Pd 125mW,Peak Spectral Response 5650A;2F C Res 32kΩ;Dark Res 10MΩ min;Voltage 300V max
17♦	VT304	3	CS	M554	Pd 125mW;Peak Spectral Response 5650A;2F.C.Res 144kΩ;Dark Res. 50MΩ min,Voltage 300V max.
18♦	VT305	3	CS	M554	Pd 125mW,Peak Spectral Response 5650A;2F.C.Res 1.0MΩ;Dark Res. 200MΩ min;Voltage 300V max
19♦	VT311	3	CdSe	M554	Pd 125mW;Peak Spectral Response 7350A;2F.C.Res 4.2kΩ;Dark Res 1.0MΩ min,Voltage 200V max
20♦	VT311L	3	CdSe	M554	Pd 125mW;Peak Spectral Response 7350A;2F C.Res 2.1kΩ;Dark Res. 500kΩ min;Voltage 300V max.
21♦	VT312	3	CdSe	M554	Pd 125mW;Peak Spectral Response 7350A;2F C.Res 22kΩ;Dark Res. 50MΩ min;Voltage 300V max
22♦	VT312-2	3	CdSe	M554a	Dual Element;Pd 50mW;Pk Spect.Res 7350A;2F C.Res 5.0kΩ;Dark Res 1.0MΩ min;Volt. 200V max.
23♦	VT312H	3	CdSe	M554	Pd 125mW;Peak Spectral Response 7350A;2F.C Res 30kΩ;Dark Res. 50MΩ min;Voltage 300V max
24♦	VT312L	3	CdSe	M554	Pd 125mW;Peak Spectral Response 7350A;2F.C.Res 22kΩ;Dark Res 5.0MΩ min;Voltage 200V max
25♦	VT313L2	3	CdSe	M554a	Dual Element;Pd 50mW;Peak Spect.Res 7350A;2F.C.Res 10kΩ;Dark Res 1.0MΩ min;Volt 200V max
26♦	VT313L	3	CdSe	M554	Pd 125mW;Peak Spectral Response 7350A;2F.C Res 60kΩ;Dark Res. 100MΩ min;Voltage 300V max.
27♦	VT314	3	CdSe	M554	Pd 125mW;Peak Spectral Response 7350A;2F.C.Res 140kΩ;Dark Res. 200MΩ min;Voltage 300V max.
28♦	VT321	3	CS	M554	Pd 125mW;Peak Spectral Response 5150A;2F.C.Res 3.9kΩ;Dark Res. 200kΩ min;Voltage 200V max
29♦	VT321H	3	CS	M554	Pd 125mW;Peak Spectral Response 5150A;2F.C.Res 7.8kΩ;Dark Res. 1.0MΩ min;Voltage 200V max
30♦	VT322	3	CS	M554	Pd 125mW;Peak Spectral Response 5150A;2F.C.Res 31 2kΩ;Dark Res. 10MΩ min;Voltage 300V max.
31♦	VT322L	3	CS	M554	Pd 125mW;Peak Spectral Response 5150A;2F.C.Res 15.6kΩ;Dark Res 5.0MΩ min;Voltage 300V max.
32♦	VT325	3	CS	M554	Pd 125mW;Peak Spectral Response 5150A;2F.C Res 1.0MΩ;Dark Res. 200MΩ min;Voltage 300V max
33♦	VT333	3	CS	M554	Pd 125mW;Peak Spectral Response 5500A;2F.C.Res 28kΩ;Dark Res. 10MΩ min;Voltage 200V max
34♦	VT333L	3	CS	M554	Pd 125mW;Peak Spectral Response 5500A,2F.C Res 14kΩ;Dark Res. 5 0MΩ min,Voltage 200V max
35	VT334-2I	3	CS	M555a	Dual Cell;Pd 120mW,Dark Res. 10MΩ min;Matching Ratio 80-1 20;Voltage 300V max.
36	VT334-2IA	3	CS	M555a	Dual Cell;Pd 120mW;Dark Res. 10MΩ min;Matching Ratio 90-1.10;Voltage 300V max.
37	VT334-2IB	3	CS	M555a	Dual Cell;Pd 120mW;Dark Res 10MΩ min;Matching Ratio 95-1 05;Voltage 300V max.
38♦	VT341	3	CdSe	M554	Pd 125mW;Peak Spectral Response 6750A;2F.C.Res 1 2kΩ;Dark Res. 500kΩ min;Voltage 200V max
39♦	VT341-2	3	CdSe	M554a	Dual Element;Pd 50mW;Peak Spect.Res 6750A;2F.C.Res 3.0kΩ;Dark Res 200kΩ min;Volt 200V max.
40♦	VT341H	3	CdSe	M554	Pd 125mW;Peak Spectral Response 6750A;2F.C.Res 2.4kΩ;Dark Res 1.0MΩ min;Voltage 300V max.
41♦	VT342	3	CdSe	M554	Pd 125mW;Peak Spectral Response 6750A;2F.C.Res 7.0kΩ;Dark Res. 5.0MΩ min;Voltage 300V max
42♦	VT342L	3	CdSe	M554	Pd 125mW;Peak Spectral Response 6750A;2F C.Res 4 8kΩ;Dark Res. 1.0MΩ min;Voltage 300V max.
43♦	VT343	3	CdSe	M554	Pd 125mW;Peak Spectral Response 6750A;2F.C Res 28kΩ;Dark Res. 10MΩ min;Voltage 300V max
44♦	VT343L	3	CdSe	M554	Pd 125mW;Peak Spectral Response 6750A;2F.C Res 14kΩ;Dark Res 10MΩ min;Voltage 300V max.
45♦	VT501	3	CS	M554b	Pd 500mW;Peak Spectral Response 5650A;2FC Res 2.6kΩ;Dark Res 200kΩmin;Voltage 200V max.
46♦	VT501H	3	CS	M554b	Pd 500mW;Peak Spectral Response 5650A;2F.C.Res 4.0kΩ;Dark Res. 500kΩ min;Voltage 300V max
47♦	VT502	3	CS	M554b	Pd 500mW;Peak Spectral Response 5650A;2F.C Res 16kΩ;Dark Res. 5.0MΩ min;Voltage 300V max.
48♦	VT502L	3	CS	M554b	Pd 500mW;Peak Spectral Response 5650A;2F.C.Res 8.0kΩ;Dark Res. 1 0MΩ min,Voltage 300V max.
49♦	VT503	3	CS	M554b	Pd 500mW;Peak Spectral Response 5650A;2F.C Res 66kΩ;Dark Res. 50MΩ min;Voltage 300V max
50♦	VT503L	3	CS	M554b	Pd 500mW;Peak Spectral Response 5650A;2F.C.Res 32kΩ;Dark Res. 10MΩ min;Voltage 300V max
51♦	VT511	3	CdSe	M554b	Pd 500mW;Peak Spectral Response 7350A;2F.C Res 2 3kΩ;Dark Res. 500kΩ min,Voltage 300V max.
52♦	VT511H	3	CdSe	M554b	Pd 500mW;Peak Spectral Response 7350A;2F.C Res 4.6kΩ;Dark Res. 1 0MΩ min;Voltage 300V max
53♦	VT511L	3	CdSe	m554b	Pd 500mW,Peak Spectral Response 7350A;2F.C.Res 1.4kΩ;Dark Res. 200kΩ min;Voltage 200V max
54♦	VT512L	3	CdSe	M554b	Pd 500mW;Peak Spectral Response 7350A;2F.C Res 9 2kΩ;Dark Res. 10MΩ min;Voltage 300V max.
55♦	VT521	3	CS	M554b	Pd 500mW;Peak Spectral Response 5150A;2FC Res 2 6kΩ;Dark Res 100kΩmin,Voltage 200V max.
56♦	VT521H	3	CS	M554b	Pd 500mW;Peak Spectral Response 5150A;2F.C.Res 5.0kΩ;Dark Res. 500kΩ min;Voltage 300V max
57♦	VT522	3	CS	M554b	Pd 500mW;Peak Spectral Response 5150A;2F.C.Res 18kΩ;Dark Res. 5.0MΩ min;Voltage 300V max.
58♦	VT522L	3	CS	M554b	Pd 500mW;Peak Spectral Response 5150A;2F.C.Res 9.0kΩ;Dark Res. 1.0MΩ min,Voltage 300V max.
59♦	VT523L	3	CS	M554b	Pd 500mW;Peak Spectral Response 5150A;2F.C Res 36kΩ;Dark Res. 10MΩ min;Voltage 300V max.
60♦	VT533	3	CS	M554b	Pd 500mW;Peak Spectral Response 5500A;2F.C.Res 25kΩ;Dark Res. 10MΩ min;Voltage 200V max.
61♦	VT533L	3	CS	M554b	Pd 500mW;Peak Spectral Response 5500A;2F.C.Res 12 5kΩ;Dark Res. 5.0MΩ min;Voltage 200V max
62♦	VT541	3	CdSe	M554b	Pd 500mW;Peak Spectral Response 6750A;2F C.Res 5.0kΩ;Dark Res 500kΩ min,Voltage 200V max.
63♦	VT541H	3	CdSe	M554b	Pd 500mW;Peak Spectral Response 6750A;2F.C.Res 1.0kΩ;Dark Res. 1 0MΩ min;Voltage 200V max
64♦	VT542	3	CdSe	M554b	Pd 500mW;Peak Spectral Response 6750A;2F.C.Res 2 0kΩ;Dark Res. 1.0MΩ min;Voltage 300V max
65♦	VT542L	3	CdSe	M554b	Pd 500mW,Peak Spectral Response 6750A;2F C.Res 1.5kΩ;Dark Res. 1.0MΩ min;Voltage 300V max
66▼	VT701	3	CS	M556	Pd 250mW;Peak Spectral Response 5650A;2F.C.Res 3.0kΩ;Dark Res 5.0MΩ min;Volt. 200V max.
67▼	VT701E	3	CS	M602	Pd 250mW;Peak Spectral Response 5650A;2F.C Res 3 3kΩ;Dark Res 300kΩ min;Volt. 100V max.
68▼	VT702E	3	CS	M602	Pd 250mW;Peak Spectral Response 5650A;2F.C.Res 17.6kΩ;Dark Res 1.0MΩ min;Volt. 300V max.
69▼	VT712E	3	CdSe	M602	Pd 250mW;Peak Spectral Response 7350A;2F.C.Res 24.2kΩ;Dark Res 20MΩ min;Volt. 300V max
70♦	VT721	3	CS	M556	Pd 250mW;Peak Spectral Response 5150A;2F.C.Res 2 6kΩ;Dark Res 1.0MΩ min;Volt. 300V max
71♦	VT721H	3	CS	M556	Pd 250mW;Peak Spectral Response 5150A;2F.C Res 4 8Ω;Dark Res 2.0MΩ min;Volt 300V max
72▼	VT721HE	3	CS	M602	Pd 250mW;Peak Spectral Response 5150A;2F C.Res 5.5kΩ;Dark Res 2.0MΩ min;Volt. 300V max.
73♦	VT732	3	CS	M556	Pd 250mW;Peak Spectral Response 5500A;2F.C.Res 10Ω;Dark Res 10MΩ min;Volt 300V max.
74▼	VT732E	3	CS	M602	Pd 250mW;Peak Spectral Response 5500A;2F.C.Res 11kΩ;Dark Res 10MΩ min;Volt. 300V max.
75▼	VT741	3	CdSe	M556	Pd 250mW;Peak Spectral Response 6750A;2F.C.Res 900Ω;Dark Res 500kΩ min;Volt. 100V max.
76▼	VT741E	3	CdSe	M602	Pd 250mW;Peak Spectral Response 6750A;2F.C.Res 1.32kΩ;Dark Res 500kΩ min;Volt 100V max
77♦	VT801	3	CS	M556a	Pd 175mW;Peak Spectral Response 5650A;2F.C.Res 3 0kΩ;Dark Res 250kΩ min;Volt. 200V max
78♦	VT804	3	CS	M556a	Pd 175mW;Peak Spectral Response 5650A;2F.C.Res 140kΩ;Dark Res 50MΩ min;Volt. 300V max
79♦	VT833	3	CS	M556a	Pd 175mW;Peak Spectral Response 5550A;2F.C.Res 33kΩ;Dark Res 15MΩ min;Volt. 300V max
80♦	VT835	3	CS	M556a	Pd 175mW,Peak Spectral Response 5500A;2F.C.Res 330kΩ;Dark Res 100MΩ min;Volt. 300V max
81♦	VT841L	3	CdSe	M556a	Pd 175mW;Peak Spectral Response 6750A,2F.C Res 900Ω;Dark Res 500kΩ min;Volt. 100V max
82▼	VT901	3	CS	M556b	Pd 80mW;Peak Spectral Response 5650A;2F C Res 4.3kΩ;Dark Res 500kΩ min;Volt. 100V max
83▼	VT902	3	CS	M556b	Pd 80mW;Peak Spectral Response 5650A,2F.C Res 8 0kΩ;Dark Res 750kΩ min,Volt. 100V max
84▼	VT903H	3	CS	M556b	Pd 80mW;Peak Spectral Response 5650A;2F.C.Res 44kΩ;Dark Res 5 0MΩ min;Volt 300V max.
85▼	VT904	3	CS	M556b	Pd 80mW;Peak Spectral Response 5650A;2F C.Res 110kΩ;Dark Res 20MΩ min;Volt 300V max.
86▼	VT904L	3	CS	M556b	Pd 80mW;Peak Spectral Response 5650A,2F.C Res 88kΩ;Dark Res 10MΩ min;Volt 300V max.
87▼	VT912	3	CdSe	M556b	Pd 80mW;Peak Spectral Response 7350A;2F C.Res 15kΩ;Dark Res 20MΩ min,Volt. 100V max
88▼	VT912L	3	CdSe	M556b	Pd 80mW;Peak Spectral Response 7350A;2F C Res 6 0kΩ,Dark Res 5 0MΩ min,Volt. 100V max
89▼	VT913H	3	CdSe	M556b	Pd 80mW;Peak Spectral Response 7350A;2F C Res 32kΩ;Dark Res 50MΩ min;Volt 100V max
90▼	VT914	3	CdSe	M556b	Pd 80mW;Peak Spectral Response 7350A;2F.C.Res 140kΩ;Dark Res 200MΩ min,Volt 250V max
91▼	VT914L	3	CdSe	M556b	Pd 80mW,Peak Spectral Response 7350A,2F.C Res 64kΩ,Dark Res 100MΩ min;Volt 100V max
92▼	VT931	3	CS	M556b	Pd 80mW;Peak Spectral Response 5500A;2F.C.Res 22kΩ;Dark Res 1 0MΩ min,Volt 100V max
93▼	VT932	3	CS	M556b	Pd 80mW,Peak Spectral Response 5500A,2F C.Res 100kΩ,Dark Res 50MΩ min;Volt. 100V max
94▼	VT941	3	CdSe	M556b	Pd 80mW,Peak Spectral Response 6750A,2F C Res 2 0kΩ;Dark Res 500kΩ min,Volt 100V max
95	2A	4	Si	M192	Output at 10kfc,400mV;Power 38mW;Short circuit I 155mA
96	51C	4	Si	M193b	Output at 10k fc, 400mV; power 3 1mW,short circuit I 11mA.
97	52C	4	Si	M193a	Output at 10k fc, 400mV; power 6.4mW,short circuit I 23mA
98	55C	4	Si	M193c	Output at 10k fc, 400mV;power 1 5mW;short circuit I 5 4mA
99	58C	4	Si	M193d	Output at 10k fc, 400mV;power 720uW;short circuit I 2 5mA
100	110C	4	Si	M193f	Output at 10k fc, 400mV,power 7 1mW;short circuit I 27mA
101#	BPX31	4	Si△		Pd 72mW,Vf450mV;If160mA;wave length 8500A.
102#	BPX32	4	Si		Pd 2 5W,Vf18V,If140mA,Sens100mW/cm2
103#	BPX33	4	Si△		Pd 47 5mW,Vf 420mV,If 113mA;wavelength 8000A,Sens 100mW/cm2
104#	BPY15	4	Si	M345	Voltage-350mV max, Current-97mA max ; Sens -800W/m sq
105#	BPY45	4	Si	M272	V- 45V;Photo Sens -1000nA/Lx max;ES-.85um.
106▼#	BPY70	4	Si	M600	N/P photo voltaic device,Power Output Ic 2 6mAmin,(RL 0;E 1000 Lx)
107♦#	BPY71	4	Si	M600a	N/P Photo voltaic device,Power output IC 1 3mA min;(RL0,E 1000Lx)
108▼#	BPY72	4	Si	M601	N/P photo voltaic device,Power Output Ic 230uAmin,(RL 0; E 1000Lx)
109#	MS20△	4	Si	M293	Radiation Resistant; Isc greater than 66mA, Voc greater than 530mV
110#	MS22	4	Si	M293	Output at 3 0k lumens/sq ft Voc-0 54V ISC-125mA

SYMBOLS AND CODES EXPLAINED IN INTERPRETER

12. MISCELLANEOUS DIODES

IN ORDER OF (1) USE and (2) TYPE No.

LINE No.	2 TYPE No.	1 USE	DESCRIPTION MAT.	DWG. No.	TECHNICAL DATA
1	N120CG6	4	Si	M146	N/P;Con.Eff.-6.0% min; Po-14.7mW min; I-34.1mA min
2	N120CG7	4	Si	M146	N/P;Con.Eff.-7.0% min; Po-17.2mW min; I-40mA min.
3	N120CG8	4	Δ	M146	N/P photo voltaic device;Power Output 20.2mW min;Vo 430mV;Io 47mA min.
4	N120CG9	4	Δ	M146	N/P photo voltaic device;Power Output 22.7mW min;Vo 430mV;Io 52.8mA min
5	N120CG10	4	Δ	M146	N/P photo voltaic device;Power Output 25.2mW min;Vo 430mV;Io 58.6mA min.
6	N120CG11	4	Δ	M146	N/P photo voltaic device;Power Output 27.7mW min;Vo 430mV;Io 64.5mA min.
7	N120CG12	4	Si	M146	N/P; Con.Eff.-12% min; po-29.4mW min; I-68.2mA min.
8	N210CG6	4	Si	M191	N/P;Con.Eff.-6.0% min; Po-15 2mW min; I-35.3mA min.
9	N210CG7	4	Si	M191	N/P;Con.Eff.-7.0% min; Po-17.7mW min; I-41.1mA min.
10	N210CG8	4	SiΔ	M191	N/P photovoltaic device; power output 21.3mWmin;Vo430mV;Io 49.5mA min.
11	N210CG9	4	SiΔ	M191	N/P photo voltage;Power Output 23.9mW min;Vo 430mV;Io 55.6mA min.
12	N210CG10	4	SiΔ	M191	N/P photo voltage;Power Output 26.6mW min;Vo 430mV;Io 61.9mA min.
13	N210CG11	4	SiΔ	M191	N/P photo voltage;Power Output 29.3mW min;Vo 430mV;Io 68.1mA min.
14	N210CG12	4	Si	M191	N/P; Con.Eff.-12% min; po-30.4mW min.; I-70.6mA min.
15	N220CG8	4	SiΔ	M146a	N/P photovoltaic device; power output 42.6mW min;Vo 430mV;Io 99.1mAmin.
16	N220CG9	4	SiΔ	M146a	N/P photovoltaic device; power output 47 9mW min;Vo 430mV;Io 111.4mA min
17	N220CG10	4	SiΔ	M146a	N/P photovoltaic device; power output 53 2mW min;Vo 430mV;Io 123.7mA min
18	N220CG11	4	SiΔ	M146a	N/P photovoltaic device;power output 58.5mW min; Vo 430mV;Io 136.0mA min.
19	N220CG12	4	Si	M146a	N/P; Con.Eff.-12% min.; po-61mW min.; I-142mA min.
20	N230CG8	4	Si	M146b	N/P; Con.Eff -8 0% min.; po-61mW min.; I-142mA min.
21	N230CG9	4	Si	M146b	N/P; Con.Eff.-9.0% min.; po-68.7mW min.; I-160mA min.
22	N230CG10	4	Si	M146b	N/P; Con.Eff.-10% min.; po-76.4mW min.; I-176.5mA min
23	N230CG11	4	Si	M146b	N/P; Con.Eff.-11% min.; po-84mW min.; I-195.5mA min.
24	N230CG12	4	Si	M146b	N/P; Con.Eff.-12% min.; po-91 5mW min ; I-213mA min.
25	N240CG8	4	SiΔ	M146c	N/P photovoltaic device; power output 85.1mW min;Vo 430mV;Io 197.9mA min
26	N240CG9	4	SiΔ	M146c	N/P photovoltaic device; power output 95.8mW min; Vo 430mV;Io 222 8mA min
27	N240CG10	4	SiΔ	M146c	N/P photovoltaic device; power output 106.4mW min; Vo 430mV;Io 247.4mA min.
28	N240CG11	4	SiΔ	M146c	N/P photovoltaic device; power output 117.0mW min;Vo 430mV;Io 272.1mA min.
29	N260CG8	4	SiΔ	M146d	N/P photovoltaic device; power output 127.7mWmin; Vo 430mV;Io 297mA min.
30	N260CG9	4	SiΔ	M146d	N/P photovoltaic device; power output 143.6mW min;Vo 430mV;Io 334mA min.
31	N260CG10	4	SiΔ	M146d	N/P photovoltaic device, power output 159.6mW min;Vo 430mV;Io 371.2mA min.
32	N260CG11	4	SiΔ	M146d	N/P photovoltaic device; power output 175.6mW min;Vo 430mV;Io 408.4mA min.
33▼	R1LB	4	Se	M615d	Sens 5 4uA/fc/sq.in;Peak Spectral Response 575nm;Output 230uA;Rs 50Ω sq.in;VR 6 0V max
34▼	R5LB	4	Se	M615e	Sens 5 4uA/fc/sq.in;Peak Spectral Response 575nm;Output 390uA;Rs 50Ω sq.in;VR 6.0V max
35▼	R10EB	4	Se	M417f	Sens 5.4uA/fc/sq.in;Peak Spectral Response 575nm;Cap .250uf/sq.in;Rs 50Ω sq in;VR 6 0V max.
36▼	R10LB	4	Se	M615f	Sens 5 4uA/fc/sq.in;Peak Spectral Response 575nm;Output 430uA;Rs 50Ω sq.in;VR 6.0V max
37▼	R10MB	4	Se	M618	Sens 5 4uA/fc/sq.in;Peak Spectral Response 575nm;Cap 250uf/sq.in;Rs 50Ω sq.in;VR 6.0V max.
38▼	R75EB	4	Se	M417g	Sens 5.4uA/fc/sq.in;Peak Spectral Response 575nm;Cap .250uf/sq.in;Rs 50Ω sq.in;VR 6.0V max.
39▼	R75LB	4	Se	M615g	Sens 5.4uA/fc/sq.in,Peak Spectral Response 575nm;Output 500uA;Rs 50Ω sq.in;VR 6.0V max.
40▼	R100GB	4	Se	M620	Sens 5.4uA/fc/sq.in;Peak Spectral Response 575nm;Cap .250uf/sq.in;Rs 50Ω sq.in;VR 6 0V max
41▼	R100KB	4	Se	M619	Sens 5 4uA/fc/sq in;Peak Spectral Response 575nm;Cap .250uf/sq.in;Rs 50Ω sq.in;VR 6.0V max
42▼	R100LB	4	Se	M615h	Sens 5 4uA/fc/sq in;Peak Spectral Response 575nm;Output 850uA;Rs 50Ω sq.in;VR 6.0V max.
43▼	R100MB	4	Se	M618a	Sens 5 4uA/fc/sq.in;Peak Spectral Response 575nm;Cap 250uf/sq.in,Rs 50Ω sq.in;VR 6 0V max
44	RPY13	4	CdS	M74a	Light Switch-4 cells and lamp
45▼	RX5LB	4	Se	M615	Sens 5.4uA/fc/sq.in;Peak Spectral Response 575nm;Output 14uA,Rs 50Ω sq.in;VR 6.0V max.
46▼	RX10LB	4	Se	M615a	Sens 5.4uA/fc/sq in;Peak Spectral Response 575nm;Output 20uA;Rs 50Ω sq.in;VR 6.0V max
47▼	RX15LB	4	Se	M615b	Sens 5 4uA/fc/sq.in;Peak Spectral Response 575nm;Output 44uA;Rs 50Ω sq.in;VR 6.0V max.
48▼	RX80EB	4	Se	M384g	Sens 5.4uA/fc/sq.in;Peak Spectral Response 575nm;Cap .250uf/sq.in;Rs 50Ω sq.in;VR 6.0V max
49▼	RX80HB	4	Se	M384g	Sens 5.4uA/fc/sq in;Peak Spectral Response 575nm;Cap .250uf/sq.in;Rs 50Ω sq.in;VR 6.0V max
50▼	RX80LB	4	Se	M615c	Sens 5 4uA/fc/sq in;Peak Spectral Response 575nm;Output 170uA;Rs 50Ω sq.in;VR 6 0V max.
51▼	RX80TB	4	Se	M617	Sens 5 4uA/fc/sq in;Peak Spectral Response 575nm;Cap .250uf/sq.in;Rs 50Ω sq.in;VR 6.0V max.
52▼	S1LB	4	Se	M615k	Sens 5.4uA/fc/sq in;Peak Spectral Response 575nm;Output 88uA;Rs 50Ω sq.in;VR 6.0V max.
53▼	S2LB	4	Se	M615m	Sens 5.4uA/fc/sq in;Peak Spectral Response 575nm;Output 120uA;Rs 50Ω sq.in;VR 6.0V max.
54▼	S3LB	4	Se	M615n	Sens 5.4uA/fc/sq.in;Peak Spectral Response 575nm;Output 180uA;Rs 50Ω sq.in;VR 6.0V max.
55▼	S4LB	4	Se	M615p	Sens 5.4uA/fc/sq.in;Peak Spectral Response 575nm;Output 220uA;Rs 50Ω sq.in;VR 6.0V max
56▼	S5LB	4	Se	M615q	Sens 5.4uA/fc/sq.in;Peak Spectral Response 575nm;Output 130uA;Rs 50Ω sq.in;VR 6.0V max.
57▼	S7LB	4	Se	M615r	Sens 5 4uA/fc/sq in;Peak Spectral Response 575nm;Output 205uA;Rs 50Ω sq.in;VR 6.0V max.
58▼	S8LB	4	Se	M615s	Sens 5.4uA/fc/sq.in;Peak Spectral Response 575nm;Output 220uA;Rs 50Ω sq.in;VR 6.0V max.
59▼	S10LB	4	Se	M615t	Sens 5.4uA/fc/sq.in;Peak Spectral Response 575nm;Output 225uA;Rs 50Ω sq.in;VR 6.0V max
60▼	S11LB	4	Se	M615u	Sens 5.4uA/fc/sq.in;Peak Spectral Response 575nm;Output 235uA;Rs 50Ω sq.in;VR 6.0V max.
61▼	S13LB	4	Se	M615v	Sens 5.4uA/fc/sq in;Peak Spectral Response 575nm;Output 500uA;Rs 50Ω sq.in;VR 6 0V max.
62▼	S14LB	4	Se	M615w	Sens 5.4uA/fc/sq.in;Peak Spectral Response 575nm;Output 660uA;Rs 50Ω sq.in;VR 6.0V max.
63▼	S17LB	4	Se	M615x	Sens 5.4uA/fc/sq.in,Peak Spectral Response 575nm,Output 56uA;Rs 50Ω sq.in,VR 6.0V max.
64▼	S50LB	4	Se	M615y	Sens 5 4uA/fc/sq in;Peak Spectral Response 575nm;Output 255uA;Rs 50Ω sq in;VR 6.0V max.
65▼	S55LB	4	Se	M615z	Sens 5.4uA/fc/sq in,Peak Spectral Response 575nm;Output 680uA;Rs 50Ω sq.in;VR 6.0V max.
66▼	S56LB	4	Se	M615aa	Sens 5.4uA/fc/sq.in;Peak Spectral Response 575nm;Output 580uA,Rs 50Ω sq.in;VR 6.0V max.
67▼	S100EB	4	Se	M616	Sens 5.4uA/fc/sq.in;Peak Spectral Response 575nm;Cap 250uf/sq.in;Rs 50Ω sq in;VR 6.0V max
68▼	S100LB	4	Se	M615ab	Sens 5.4uA/fc/sq.in,Peak Spectral Response 575nm;Output 400uA;Rs 50Ω sq.in;VR 6.0V max.
69▼	S150LB	4	Se	M615ac	Sens 5.4uA/fc/sq.in;Peak Spectral Response 575nm;Output 330uA;Rs 50Ω sq.in;VR 6.0V max.
70▼#	S224	4	Si		P/N,Conversion Eff.9-10%;Isc 90mA;Voc .530V;Iop 86mA at 4.2V;360mV at 100,000 lnx.
71	S0510E4	4	SSi	M223	Conversion Eff.-4 0;Po-1 6mW;Io-4.0mA at 40V;Act. Area-.40 cm. sq
72	S0510E5	4	Si	M223	Conversion Eff -5.0;Po-2.0mW;Io-5 0mA at 40V;Act Area- 40 cm. sq
73	S0510E6	4	Si	M223	Conversion Eff.-6 0;Po-2 4mW;Io-6.0mA at .40V;Act. Area-.40 cm. sq
74	S0510E7	4	Si	M223	Conversion Eff.-7.0,Po-2.8mW;Io-7 0mA at .40V;Act Area-.40 cm. sq
75	S0510E8	4	Si	M223	Conversion Eff.-8 0,Po-3 2mW;Io-8.0mA at 40V;Act. Area-.40 cm. sq
76	S0510E9	4	Si	M223	Conversion Eff.-9.0;Po-3 6mW;Io-9 0mA at .40V;Act. Area-.40 cm sq.
77	S0510E10	4	Si	M223	Conversion Eff.-10;Po-4.0mW;Io-10mA at .40V;Act. Area-.40 cm. sq.
78	S0510E11	4	Si	M223	Conversion Eff.-11;Po-4 4mW;Io-11mA at .40V,Act. Area-.40 cm sq
79	S0520E4	4	Si	M193e	Conversion Eff -4.0;Po-3.2mW;Io-8 0mA at .40V;Act. Area-.80 cm sq
80	S0520E5	4	Si	M193e	Conversion Eff -5.0;Po-4 0mW;Io-10mA at 40V;Act. Area-.80 cm. sq
81	S0520E6	4	Si	M193e	Conversion Eff.-6.0;Po-4 8mW;Io-12mA at .40V;Act. Area-.80 cm sq
82	S0520E7	4	Si	M193e	Conversion Eff.-7 0;Po-5 6mW;Io-14mA at .40V,Act Area-.80 cm. sq.
83	S0520E8	4	Si	M193e	Conversion Eff -8.0;Po-6.4mW;Io-16mA at .40V,Act. Area-.80 cm sq
84	S0520E9	4	Si	M193e	Conversion Eff.-9.0;Po-7.2mW;Io-18mA at .40V;Act. Area-.80 cm. sq.
85	S0520E10	4	Si	M193e	Conversion Eff.-10;Po-8 0mW;Io-20mA at .40V;Act. Area-.80 cm. sq
86	S0520E11	4	Si	M193e	Conversion Eff -11,Po-8.8mW;Io-22mA at .40V,Act. Area-.80 cm. sq
87	S1020E4	4	Si	M193	Conversion Eff.-4.0;Po-7 2mW min;Io-18mA at 40V;Act. Area-1.8 cm sq
88	S1020E5	4	Si	M193	Conversion Eff.-5 0;Po-9.0mW min;Io-2mA at .40V,Act. Area-1 8 cm. sq.
89	S1020E6	4	Si	M193	Conversion Eff -6 0;Po-10.8mW min;Io-27mA at .40V;Act. Area-1.8 cm sq
90	S1020E7	4	Si	M193	Conversion Eff -7 0,Po-12.6mW min,Io-31mA at 40V;Act. Area-1.8 cm. sq.
91	S1020E8	4	Si	M193	Conversion Eff.-8.0,Po-14 4mW min,Io-36mA at .40V;Act. Area-1.8 cm sq
92	S1020E9	4	Si	M193	Conversion Eff.-9.0;Po-16.2mW min;Io-40mA at .40V;Act. Area-1.8 cm sq.
93	S1020E10	4	Si	M193	Conversion Eff -10,Po-18mW min,Io-45mA at .40V;Act. Area-1.8 cm. sq.
94	S1020E11	4	Si	M193	Conversion Eff.-11,Po-19 8mW min;Io-49mA at 40V;Act Area-1.8 cm. sq
95	S2900E5M	4	Si	M303	Load Voltage-.40V; Load Current-60mA, Power-24mW
96	S2900E7M	4	Si	M303	Load Voltage- 40V, Load Current-90mA; Power 36mW
97	S2900E9.5M	4	Si	M303	Load Voltage- 40V; Load Current-120mA, Power 48mW
98	SD2A1020E4	4	Si	M218	Conversion Eff.-4-6%, Pmax-14-21; Vout-.64 at Pmax.
99	SD2A1020E6	4	Si	M218	Conversion Eff.-6-8%, Pmax-21-28; Vout-.70 at Pmax.
100	SDA1020E4	4	Si	M217	Conversion Eff -4-6%, Pmax-7-10 5; Vout-.32 at Pmax
101	SDA1020E6	4	Si	M217	Conversion Eff -6-8%, Pmax-10.5-14, Vout-.35 at Pmax
102	SM5A1020E4	4	Si	M219	Conversion Eff -4-6%
103	SM5A1020E6	4	Si	M219	Conversion Eff -6-8%
104#	SP60	4	Si	M131	Dark I-1uA at 50V, Power-250mW max.; Freq.-10Gc max , Sens -20uA/mW cm sq
105	SS10	4	Si	M193a	Photo Area-1.8 sq cm; Iout-28mA, Vout-.40V; P-11 2mW.
106	SS11	4	Si	M193f	Photo Area-.90 sq cm, Iout-14mA, Vout-.40V; P-5.6mw
107	SS12	4	Si	M193b	Photo Area-.45 sq cm, Iout-7.0mA, Vout-.40V, P-2.8mW
108	SS20	4	Si	M193e	Photo Area- 80 sq cm; Iout-12mA, Vout- 40V; P-4 8mW
109	SS21	4	Si	M193b	Photo Area- 40 sq cm, Iout-60mA, Vout- 40V; P-2 4mW
110	SS22	4	Si		Photo Area-.20 sq cm, Iout-3 0mA, Vout- 40V, P-1 2mW

SYMBOLS AND CODES EXPLAINED IN INTERPRETER

12. MISCELLANEOUS DIODES

IN ORDER OF (1) USE and (2) TYPE No.

LINE No	2 TYPE No	1 USE	DESCRIPTION MAT.	DWG. No.	TECHNICAL DATA
1	SS23	4	Si	M193d	Photo Area-.10 sq cm; Iout-1.5mA; Vout-40V; P-60mW.
2	SS30	4	Si	M192	Photo Area-4 8 sq.cm; Iout-75mA; Vout-40V, P-30mW.
3	SS31	4	Si	M192a	Photo Area-1 2 sq cm, Iout-18mA; Vout-40V; P-7 2mW
4	SS100	4	Si	M207	Iout-15mA min, Vout-40mV min P-6.0mW min.
5	SS200A	4	Si	M102	Vload-40V; Iload-60mA min, Power-24mW min
6	SS200B	4	Si	M102	Vload-40V; Iload-90mA min, Power-36mW min
7	SS200C	4	Si	M102	Vload-40V, Iload-120mA min; Power-48mW min.
8	SS200D	4	Si	M102	Vload-40V; Iload-150mA min; Power-60mW min
9♦#	SS2020G	4	Si	M146a	N/P,Radiation resistant,Conversion Eff.10.5-11 5%;Isc 140mA,Voc 54V;55 9mw at 140mw/cm2AMO.
10	SSM410	4		M103	Load V-1 6V min; Load I-36mA min; Power-58mW min.
11	SSM510	4		M103	Load V-2 0V min; Load I-36mA min, Power-72mW. min.
12	SSM920	4		M103	Load V-3 6V min, Load I-17mA min; Power-61mW. min.
13	SSM1020	4		M103	Load V-4 0V min, Load I-17mA min, Power-68mW min
14▼	SX10LB	4	Se	M615j	Sens 5.4uA/fc/sq in;Peak Spectral Response 575nm;Output 28uA,Rs 50Ω sq.in;VR 6.0V max
15	1N3353	5	Ge	TO18	IP-100uA max, VF-80mV at 1 0mA; C-4 0pF; LS-1.0nh
16	1N3539	5	Si	TO18	If 1.0mA max; Ir-1 25mA max; VF-.60V min at If-047mA
17	1N3539A	5	Si	TO18	IF-1 0mA max,IR-1 25mA max; C-10pf max, Vf-700mV min.
18	1N3540	5	Si	TO18	If-2 0mA max; Ir-2 5mA max, VF-.60V min at IF-10mA
19	1N3540A	5	Si	TO18	IF-2 0mA max;I-2 5mA max;C-20pf max; Vf-700mV min
20	1N3541	5	Si	TO18	If-2 5mA max; Ir-6 25mA max, VF-.60V min at If-.22mA
21	1N3541A	5	Si	TO18	IF-2 5mA max;IR-6.25mA max; C-50pf max; Vf-700mV min.
22	1N3542	5	Si	TO18	If-3 0mA max, Ir-12 5mA max; VF-60V min at If-47mA
23	1N3542A	5	Si	TO18	IF-3.0mA max;IR-12.5mA max; C-70pf max, Vf-700mV min
24	1N3543	5	Si	TO18	If-5 0mA max; Ir-25mA max; VF-.60V min at If-1.0mA
25	1N3543A	5	Si	TO18	IF-5.0mA max;IR-25mA max, C-100pf max, Vf-700mV min
26	1N4090	5	Ge	DO18	VF-430mV; V-80mV min, IP-15ma, C-1.5pF max
27#	1T1401	5	Ge	M27a	If-9 0mA/180mV, Power diss-4.0mW.
28#	1T1402	5	Ge	M27a	If-12mA/180mV; Power diss-4 0mW.
29	4JFBD1	5	Ge	A82	If-30mA,Vf-120V;Ip-1 0mA;LS-1.5nh;Ct-8pf;tr-1.0ns
30	4JFBD2	5	Ge	A82	IF-15mA max;VF-130V typ;Ip-50mA max;LS-1 5nh typ;Ct-6 0pf max,tr-70ns typ
31	4JFBD3	5	Ge	A82	If-10mA;Vf-170V;Ip-.20mA;LS-1 5nh,Ct-4pf,tr-.50ns.
32	4JFBD4	5	Ge	A82	If-5mA;Vf-170V;Ip-10mA,LS-1 5nh,Ct-3pf,tr-.40ns.
33	4JFBD5	5	Ge	A82	If-5mA;Vf-170V;Ip-.05mA;LS-1.5nh;Ct-3pf;tr-40ns.
34	4JFBD6	5	Ge	A82	If-5mA;Vf-160V,Ip-02mA,LS-1 5nh,Ct-3pf,tr-40ns.
35	4JFBD7	5	Ge	A82	If-5mA;Vf-160V,Ip-.01mA;LS-1 5nh;Ct-3pf;tr-40ns
36	BD1∅	5	Ge	TO18	Ir-1 0mA/480mmV; If-1 0mA/100mV max
37	BD1A	5	Ge	TO18	If-1 0mA/125mV max
38	BD1B	5	Ge	TO18	If-1 0mA/100mV max.
39	BD5△	5	Ge	TO18	IR-1 0mA at 480mV, IF-5 0mA at 100mV max
40	BD402	5	Ge	DO20	Ip-50mA max;Ct-3.0pf max,Vf at If-15mA-130mV,VR at Ir-1.0mA-465mV
41	BD403	5	Ge	DO20	Ip-200uA max;Ct-1 0pf max;Vf at If-6.0mA-170mV;VR at IR-1.0mA-465mV
42	BD404	5	Ge	DO20	Ip-.10mA max,Ct-1.0pf max;Vf at If-3.0mA-170mV;VR at Ir-1.0mA-465mV
43	BD405	5	Ge	DO20	Ip-05mA max,Ct-1 0pf max;Vf at If-1.5mA-160mV;VR at Ir-1 0mA-465mV
44	BD406	5	Ge	DO20	Ip-.02mA max,Ct-2.0pf max,Vf at If-.60mA-160mV;VR at Ir-1.0mA-465mV.
45	MA4610	5	Ge	F56	VSWR at 8.8; 13.3 Gc-2.0;NFo-15db max;NRo-6db max;Zif at 20Kc-50 to 200 ohms
46	MA4610A	5	Ge	F56	VSWR at 8.8; 13.3 Gc-2.0;NFo-3db max;Zif at 20Kc-50 to 200 ohms
47	MA4619	5	Ge	F10v	VSWR at 8.8±13.3Gc-2.0;NFo-15db max;NRo-6db max;Zif at 20Kc-50 to 200 ohms
48	MA4619A	5	Ge	F10v	VSWR at 8 8±13 3Gc-2.0;NFo-15db max;NRo-6db max;Zif at 20Kc-50 to 200 ohms.
49	MA4624	5	Si	P1b∅	Doppler Mixer;freq -13300MHz;NF-15db max,VSWR-2.0;Zif-50-150 ohms
50	MA4624A	5	Si	P1b∅	Doppler Mixer,freq -13300MHz;NF-12db max,VSWR-2.0;Zif-50-150 ohms.
51	MA4625	5	Si	P1b∅	Doppler Mixer;freq -16000MHz;NF-15db max,VSWR-2.0;Zif-50-150 ohms.
52	MA4625A	5	Si	P1b∅	Doppler Mixer;freq -16000MHz;NF-12db max;VSWR-2.0;Zif-50-150 ohms.
53♦	MS1010	5	Ge	F10b	Ip 300uA max;Ct 3pf max;VR at IR 300uA - 400mV;VF at 3mA - 80mA.
54	MS1011	5	Ge	F10b	Ip-300uA max;Ct-1 5pf max;VR at IR-300uA-400mV;VF at 3.0mA-90mV,Vp-50mV.
55	MS1012	5	Ge	F10b	Ip-300uA max,Ct-1 0pf max;VR at IR-300uA-400mV,VF at 3 0mA-100mV;Vp-50mV
56#	TU1B	5	Ge	M264	Vr-520mV max;VF-120mV max at 30mA;C-3 0pf max,IFM-5 0mA
57	U1001	5	Si	DO17	IR-470uA;IR-1.25mA max;VF-600mV min
58	U1002	5	Si	DO17	IR-470uA;IR-1 25mA max;V-700mV min;Ct-10pf max
59	U1003	5	Si	DO7	IR-1 0mA;IR-2 5mA max,VF-600mVmin
60	U1004	5	Si	DO17	IR-1.0mA;IR-2.5mA max;VF-700mV min;Ct-20pf max
61	U1005	5	Si	DO17	IR-2.2mA,IR-6 3mA max;VF-600mV min.
62	U1006	5	Si	DO17	IR-2 2mA;IR-6.3mA max,VF-700mV min;Ct-50pf max
63	U1007	5	Si	DO17	IR-4.7mA;IR-13mA max;VF-600mV min
64	U1008	5	Si	DO17	IR-4 7mA,IR-13mA max;VF-700mV min,Ct-70pf max
65	U1009	5	Si	DO17	IR-10mA;IR-25mA max;VF-600mV min
66	U1010	5	Si	DO17	IR-10mA,IR-25mA max;VF-700mV min,Ct-100pf max
67	1N71	6	Ge∅	M4b△	PIV 40V,If 15mA min.at 1 0V Vf;Ir max 300uA at 30V Vr;Avg Rec Fwd Current 60mA;Max.Temp 90°C
68▼#	1S1991	6	Si	A268	Surge Cur.2.0A at 10us,VBR 37V;Break over Cur.200uA;Surge Volt 4.5V,Max temp. 125J
69	CODI6041	6	Si	DO7	Forward Regulator; Pd-250mW; VF-.70V max at 3 0mA
70	CODI6041M	6	Si	A2	Forward Regulator,Pd-250mW,VF-.70V max at 3 0mA.
71	CODI6042	6	Si	DO7	Forward Regulator; Pd-250mW; VF-1 4V max at 3.0mA
72	CODI6042M	6	Si	A2	Forward Regulator;Pd-250mW;VF-1.4V max at 3 0mA
73	CODI6043	6	Si	DO7	Forward Regulator; Pd-250mW; VF-2.1V max at 3 0mA
74	CODI6043M	6	Si	A2	Forward Regulator;Pd-250mW,VF-2.1V max at 3 0mA.
75	CODI6044	6	Si	DO7	Forward Regulator; Pd-250mW, VF-2.8V max at 3 0mA
76	CODI6044M	6	Si	A2	Forward Regulator;Pd-250mW;VF-2.8V max at 3.0mA
77	CODI6045	6	Si	DO7	Forward Regulator, Pd-250mW; VF-675V max at 3 0mA;VR-10V min; Ir-1.0uA max
78	CODI6045M	6	Si	A2	Forward Regulator;Pd-250mW;VF-.675V max at 3.0 mA;VR-10V min;IR-1.0uA max.
79	CODI6046	6	Si	DO7	Forward Regulator; Pd-250mW; VF-1 35V max at 3 0mA,VR-10V min; Ir-1.0uA max
80	CODI6046M	6	Si	A2	Forward Regulator;Pd-250mW;VF-1 35V max at 3.0 mA;VR-10V min;IR-1.0uA max
81	CODI6047	6	Si	DO7	Forward Regulator; Pd-250mW, VF-2.05V max at 3.0mA,VR-10V min; Ir-1 0uA max
82	CODI6047M	6	Si	A2	Forward Regulator;Pd-250mW;VF-2 05V max at 3 0 mA,VR-10V min;IR-1 0uA max
83	CODI6048	6	Si	DO7	Forward Regulator; Pd-250mW; VF-2 7V max at 3.0mA;VR-10V min; Ir-1.0uA max
84	CODI6048M	6	Si	A2	Forward Regulator;Pd-250mW;VF-2.7V max at 3.0 mA;VR-10V min;IR-1 0uA max.
85	CODI6049	6	Si	DO7	Forward Regulator;Pd-250mW;VF-70V max at 3 0mA;VR-10V min;IR-1 0uA max
86	CODI6049M	6	Si	A2	Forward Regulator;Pd-250mW,VF-.70V max at 3 0mA;VR-10V min;IR-1.0uA max
87	CODI6050	6	Si	DO7	Forward Regulator;Pd-250mW;VF-1.4V max at 3.0mA;VR-10V min;IR-1 0uA max.
88	CODI6050M	6	Si	A2	Forward Regulator;Pd-250mW,VF-1 4V max at 3.0mA;VR-10V min,IR-1.0uA max.
89	CODI6051	6	Si	DO7	Forward Regulator;Pd-250mW;VF-2 1V max at 3.0mA;VR-10V min;IR-1 0uA max.
90	CODI6051M	6	Si	A2	Forward Regulator;Pd-250mW;VF-2 1V max at 3.0mA;VR-10V min;IR-1 0uA max
91	CODI6052	6	Si	DO7	Forward Regulator;Pd-250mW;VF-2.8V max at 3 0mA,VR-10V min;IR-1 0uA max.
92	CODI6052M	6	Si	A2	Forward Regulator;Pd-250mW;VF-2 8V max at 3 0mA;VR-10V min;IR-1.0uA max
93#	DS31	6	Si	C1d	R at 1 5mA-400 Ohms; Ib-1.0uA at 2 0V; Eff-58±5.0%.
94#	KV1	6	Ge	C13	12-15V at 1.2mA, Temp Coeff.-2.3mV/deg.C; I-50mA max.
95#	KV2	6	Ge	C13	14-17V at 1.2mA; Temp Coeff.-2.3mV/deg C; I-50mA max.
96#	KV3	6	Ge	C13a	155-185V at 1 2mA; Temp Coeff-2.3mV/deg C; I-30mA max.
97#	KV4	6	Ge	C13	.2V min. at 1 0mA; .400V max. at 3.0mA; Temp.Coeff.-2.3mV/deg.C;I-30mA max
98#	KV5	6	Ge	TO1	10-15 at 1 0mA; Temp Coeff-2.3mV/deg C; I-50mA max.
99	PS592	6	Si	DO14	R at 1 0mA-60 Ohms; Ib-.10uA at 2 0V; Eff-.64±10%.
100	PS592G	6	Si	DO14	R at 1.0mA-60 ohms; Ib-10uA at 2.0V; Eff-.64±10%
101	PS594	6	Si	DO14	R at 1 0mA-60 ohms; Ib-1.0uA at 5.0V; Eff-.62±10%.
102	PS595	6	Si	DO14	R at 1 0mA-60 ohms; Ib-5.0uA at 5.0V; Eff-.62±10%
103	PS645	6	Si	DO14	R at 1 0mA-100 ohms; Ib-1.0uA at 5 0V; Eff-62±10%.
104	PS645G	6	Si	DO14	R at 1 0mA-100 ohms; Ib-1 0uA at 5 0V; Eff-.62±5.0%
105▼#	SD60P	6	Si	A270	Vr 35V,Io 100mA;Ir Max 5.0V at 35V; Max temp 100J.
106▼#	SD61P	6	Si	A270a	Vr 400V; Io 150mA,Ir Max 50V at 400V, Max temp 100J
107▼#	SF1	6	Si	A271	Vr 1 5KV;Io 30mA;Vf 2.0V,trr 300ns;Max temp. 100J
108▼#	SMF7-2	6	Si	M611	AC Volt 1350V;DC Volt 4 5V,Io 1.0mA at Sin wave;Freq 50kHZ;Max temp 60J
109▼#	SMF13-2	6	Si	M611a	AC Volt 1350V;DC Volt 8.1V;Io 1.0mA at Sin wave,Freq 50KHz;Max temp. 60J.
110▼#	SR1	6	Si	A272	Vr 100V;Max 400V at Inst 5.0mA;Io 150mA(Cont)250mA(Inst);Vf 1 1V at 150mA;Ir100uAat100V.

SYMBOLS AND CODES EXPLAINED IN INTERPRETER

12. MISCELLANEOUS DIODES

IN ORDER OF (1) USE and (2) TYPE No.

LINE No	2 TYPE No.	1 USE	DESCRIPTION MAT.	DWG No	TECHNICAL DATA
1▼#	SR2	6	Si	A185g	Vr 100V,Max 400V at Inst 5 0mA,Io 300mA(Cont)500mA(Inst);Vf 1 1V at 300mA;Ir100uA at100V
2▼#	SR3	6	Si	A185g	Vr 100V;Max 800V at Inst 5.0mA;Io 150mA(Cont)250mA(Inst);Vf 1 1Vat150mA;Ir200uAat200V
3▼#	SR4	6	Si	A185g	Vr 200V;Max800V at Inst 5 0mA;Io 300mA(Cont)500mA(Inst);Vf 1 1Vat300mA;Ir100uAat200V
4▼#	STV3	6	Si	A269	If 120mAmax,Is 10A;Max Ir 10uA at Vr 50V;Vf 1 7V at If 7.0mA; Tc 7.05±0.35Dyn imp.
5▼#	SV02	6	Si	A221e	Vf 1 5V at If 70mA,Ir 10uA max at 100V;Max Cur. 200mA
6▼#	SV05	6	Si	A221e	Vf 3.8V at If 70mA;Ir 10uA max at 100V;Max Cur. 80mA.
7▼#	SV07	6	Si	A221e	Vf 5.3V at If 70mA;Ir 10uA max at 100V;Max Cur. 55mA.
8	SV100A1	6	Si△	A94e	Varistor; 20V at 05mA;.90V at 100mA;Pt-.75W
9	SV100A3	6	Si△	A94e	Varistor;.35V at 01mA;1.0V at 225mA;Pt-.75W.
10	SV100A	6	Si△	A94e	Varistor, 20V at 01mA;.90V at 100mA;Pt- 75W;150 deg. Cmax
11	SV100D	6	Si△	A94e	Varistor, 43V at .01mA;.72V at 10mA;Pt-.75W
12♦#	TVA12W1100K	6	Si	M613	Nom Ref Volt 100V±10% at 100mA;Voltage ratio 1.80-3.2;Max Diss 12W;Max temp. 130C.
13▼#	TVA12W1120K	6	Si	M613	NOM Ref. Volt·120V±10% at 100mA;Voltage ratio 1 80-3 2;Max Diss. 12W;Max temp. 130C
14▼#	TVA12W1140K	6	Si	M613	NOM Ref Volt:140V±10% at 100mA,Voltage ratio 1.70-2.7;Max Diss. 12W; Max temp. 130C
15▼#	TVA12W1160K	6	Si	M613	NOM Ref. Volt:160V±10% at 100mA;Voltage ratio 1.70-2.7,Max Diss. 12W;Max temp. 130C
16▼#	TVH3W250M	6	Si	M393	NOM Ref. Volt.50V±20% at 10mA;Voltage ratio 1.70-3 2;Max Diss. 3.0W;Max temp 110C
17▼#	TVH3W265M	6	Si	M393	NOM Ref. Volt:65V±20% at 10mA;Voltage ratio 1.70-3.2;Max Diss. 3.0W;Max temp. 110C.
18▼#	TVH3W280M	6	Si	M393	NOM Ref Volt:80V±20% at 10mA;Voltage ratio 1.60-2.5;Max Diss. 3.0W;Max temp. 110C.
19▼#	TVH3W2100M	6	Si	M393	NOM Ref Volt:100V±20% at 10mA;Voltage ratio 1 60-2.5;Max Diss. 3.0W;Max temp. 110C.
20▼#	TVH3W2120M	6	Si	M393	NOM Ref. Volt:120V±20% at 10mA;Voltage ratio 1.50-2.2;Max Diss. 3.0W;Max temp. 110C.
21♦#	TVH3W2150L	6	Si	M393	Nom Ref Volt 150V±15% at 10mA;Voltage ratio 1.50-2.2;Max Diss 3.0W;Max temp. 110C.
22▼#	TVH3W2180L	6	Si	M393	NOM Ref. Volt:180V±15% at 10mA;Voltage ratio 1.45-2.0;Max Diss. 3 0W;Max temp. 110C
23▼#	TVH3W2220L	6	Si	M393	NOM Ref Volt:220V±15% at 10mA;Voltage ratio:1.45-2.0;Max Diss. 3.0W,Max temp 110C
24▼#	TVH3W2270L	6	Si	M393	NOM Ref. Volt·270V±15% at 10mA;Voltage ratio 1.40-1.9;Max Diss. 3 0W;Max temp 110C.
25▼#	TVHD3/2D2100L	6	Si	M392c	NOM Ref Volt·100V±15% at 10mA;Voltage ratio 1 50-2.0;Max Diss. 1 5W;Max temp. 120C
26▼#	TVHD3/2D2120L	6	Si	M392c	NOM Ref.Volt·120V±15% at 10mA;Voltage ratio 1.50-2.0;Max Diss 1.5W;Max temp. 120C
27▼#	TVHD3/2D2140L	6	Si	M392c	NOM Ref. Volt:140V±15% at 10mA,Voltage ratio 1.50-2.0;Max Diss. 1.5W;Max temp. 120C.
28▼#	TVHS1R3110M	6	Si	A167aa	NOM Ref. Volt:110V±20% at 1.0mA;Voltage ratio·1.70-2.5;Max Diss. 1 0W;Max temp. 120C.
29▼#	TVHS1R3150M	6	Si	A167aa	NOM Ref Volt:150V±20% at 1.0mA;Voltage ratio:1.70-2.5;Max Diss. 1 0W;Max temp. 120C.
30▼#	TVHS1R3200L	6	Si	A167aa	NOM Ref. Volt:200V±15% at 1.0mA;Voltage ratio:1.60-2 3;Max Diss. 1.0W,Max temp. 120C
31▼#	TVHS1R3260L	6	Si	A167aa	NOM Ref. Volt:260V±15% at 1.0mA;Voltage ratio·1.60-2 3;Max Diss. 1.0W;Max temp. 120C
32▼#	TVHS1R3330L	6	Si	A167aa	NOM Ref. Volt·330V±15% at 1.0mA;Voltage ratio:1.55-2.2;Max Diss. 1.0W;Max temp. 120C
33▼#	TVHS1R3400K	6	Si	A167aa	NOM Ref. Volt:400V±10% at 1 0mA;Voltage ratio 1 55-2.2;Max Diss. 1 0W;Max temp 120C
34▼#	TVHS1R3480K	6	Si	A167aa	NOM Ref. Volt:480V±10% at 1.0mA;Voltage ratio 1.50-2.0;Max Diss. 1.0W;Max temp 120C
35▼#	TVHS1R3580K	6	Si	A167aa	NOM Ref. Volt:580V±10% at 1.0mA;Voltage ratio 1 50-2 0,Max Diss. 1 0W;MAx temp. 120C
36▼#	TVHS1R3700K	6	Si	A167aa	NOM Ref Volt:700V±10% at 1 0mA,Voltage ratio 1.45-1.9;Max Diss.1.0W, MAx temp. 120C.
37▼#	TVHS1R3840K	6	Si	A167aa	NOM Ref Volt:840V±10% at 1.0mA;Voltage ratio 1.45-1.9;Max Diss. 1.0W;Max temp. 120C
38▼#	TVHS1R31100K	6	Si	A167aa	NOM Ref Volt:1.1kV%10% at 1.0mA,Voltage ratio 1.40-1.8;Max Diss. 1.0W;Max temp. 120C
39▼#	TVHS1R31300K	6	Si	A167aa	NOM Ref Volt 1 3kV±10% at 1 0mA;Voltage ratio 1.40-1.8;Max Diss 1.0W;Max temp 120C
40♦#	TVK1D24M	6	Si	M612	Nom Ref Volt 4.0V±20% at 10mA;Voltage ratio 1.80-2.7;Max Diss 1.0W;Max temp. 120C.
41▼#	TVK1D25M	6	Si	M612	NOM Ref. Volt 5 0V±20% at 10mA;Voltage ratio 1.80-2.5;Max Diss 1.0W,Max temp. 120C.
42▼#	TVK1D26M	6	Si	M612	NOM. Ref. Volt 6.0V±20% at 10mA;Voltage ratio 1.70-2.4;Max Diss. 1 0W;Max temp. 120C
43▼#	TVK1D28M	6	Si	M612	NOM Ref Volt 8.0V±20% at 10mA;Voltage ratio 1.70-2.4;Max Diss. 1.0W;Max temp. 120C
44▼#	TVK1D210M	6	Si	M612	NOM Ref. Volt 10V±20% at 10mA;Voltage ratio 1.60-2 2;Max Diss. 1.0W,Max temp 120C.
45♦#	TVK1D212M	6	Si	M612	Nom Ref Volt 12V±20% at 10mA;Voltage ratio 1.60-2.2;Max Diss 1.0W;Max temp 120C
46▼#	TVL3/4D210M	6	Si	M612b	NOM. Ref. Volt 10V±20% at 10mA;Voltage ratio 1 70-2.3;Max Diss 750mW;Max temp 120C
47♦#	TVL3/4D212M	6	Si	M612b	Nom Ref Volt 12V±20% at 10mA;Voltage ratio 1 70-2.3;Max Diss 750mW;Max temp. 120C
48▼#	TVL3/4D215L	6	Si	M612b	NOM. Ref. Volt:15V±15% at 10mA;Voltage ratio:1.65-2 2,Max Diss. 750mW;Max temp. 120C
49▼#	TVL3/4D220L	6	Si	M612b	NOM Ref. Volt:20V±15% at 10mA;Voltage ratio:1 65-2 2,Max Diss. 750mW;Max temp. 120C
50▼#	TVL3/4D227L	6	Si	M612b	NOM. Ref. Volt·27V±15% at 10mA;Voltage ratio:1.60-2 1;Max Diss 750mW;Max temp. 120C
51▼#	TVL3/4D235L	6	Si	M612b	NOM Ref.Volt.35V±15% at 10mA;Voltage ratio:1.60-2 1;Max Diss. 750mW;Max temp. 120C
52▼#	TVL3/4D3100M	6	Si	M612b	NOM Ref.Volt:100V±20% at 1mA;Voltage ratio:1 50-2.0;Max Diss. 750mW;Max temp 120C
53♦#	TVL3/4D350M	6	Si	M612b	Nom Ref Volt 50V±20% at 1mA;Voltage ratio 1 65-2.3;Max Diss 750mW;Max temp 120C
54▼#	TVL3/4D365M	6	Si	M612b	NOM Ref. Volt 65V±20% at 1mA;Voltage ratio:1.60-2.2;Max Diss. 750mW;Max temp 120C
55▼#	TVL3/4D380M	6	Si	M612b	NOM Ref Volt·80V±20% at 1mA,Voltage ratio:1.55-2.1;Max Diss 750mW,Max temp 120C.
56▼#	TVM1D246L	6	Si	M612a	NOM Ref. Volt 46V±15% at 10mA;Voltage ratio:1 70-2 5;Max Diss. 1.0W;Max temp. 120C
57▼#	TVM1D256L	6	Si	M612a	NOM Ref Volt 56V±15% at 10mA;Voltage ratio:1.70-2.5;Max Diss. 1.0W;Max temp. 120C
58♦#	TVM1D267L	6	Si	M612a	Nom Ref Volt 67V±15% at 10mA;Voltage ratio 1.65-2.3,Max Diss. 1.0W;Max temp 120C
59▼#	TVM1D279L	6	Si	M612a	NOM Ref Volt·79V±15% at 10mA,Voltage ratio·1.65-2.3;Max Diss. 1.0W,Max temp 120C
60♦#	TVM1D292L	6	Si	M612a	Nom Ref Volt 92V±15% at 10mA;Voltage ratio;1.60-2.1;Max Diss 1 0W;Max temp. 120C.
61♦#	TVM1D2108L	6	Si	M612a	Nom Ref Volt 108V±15% at 10mA;Voltage ratio 1.60-2.1;Max Diss 1 0W;Max temp. 120C
62♦#	TVS1/2D210M	6	Si	A273	NOM Ref Volt 10V±20% at 10mA;Voltage ratio 1.80-2.7;Max Diss 500mW;Max temp. 120C
63♦#	TVS1/2D213M	6	Si	A273	Nom Ref Volt 13V±20% at 10mA;Voltage ratio 1.70-2.5;Max Diss 500mW;Max temp.120C.
64♦#	TVS1/2D218M	6	Si	A273	Nom Ref Volt 18V±20% at 10mA;Voltage ratio 1 70-2.5,Max Diss 500mW;Max temp 120C
65♦#	TVS1/2D222M	6	Si	A273	Nom Ref Volt 22V±20% at 10mA;Voltage ratio 1.65-2.4,Max Diss 500mW;Max temp. 120C.
66♦#	TVS1/2D227M	6	Si	A273	Nom Ref Volt 27V±20% at 10mA;Voltage ratio 1.65-2.4;Max Diss 500mW;Max temp. 120C
67♦#	TVS1/2D233M	6	Si	A273	Nom Ref Volt 33V±20% at 10mA;Voltage ratio 1.60-2.3;Max Diss 500mW;Max temp 120C
68♦#	TVS1/2D25M	6	Si	A273	NOM Ref Volt 5.0V±20% at 10mA;Voltage ratio 2.00-3 6;Max Diss 500mW;Max temp. 120C.
69▼#	TVS1/2D27M	6	Si	A273	NOM Ref Volt 7.0V±20% at 10mA,Voltage ratio 1.90-3 1,Max Diss. 500mW;Max Temp 120C
70#	VB11	6	Ge*	C13b	If 10mA max;Vf 160mV at If 1 0mA;Temp Coeff -2 4mV/°C
71#	VB14	6	Ge*	C13b	If 10mA max;Vf 150mV at If 2.5mA;Temp Coeff.-2.4mV/°C.
72#	VR60	6	Si	A221a	Diode Varistor;VF-1.5V max/1.0A, IF-20uA max/.20V. Bidirection.
73#	VR61	6	Si	A221a	Diode Varistor;VF-2 5-3.0V/1.0mA,2.5-3.0/10mA,2.85-3.35/70mA Bidirection
74	1N3482	7	Ge	F3q	Freq.-X Band,9 0Gc;Incident power-10mW;Ins.Loss-1.2db max;Iso-25db
75#	50XV	7	Si	DO7	Pin,VR-700V;Cb-.07pf;Cj-.90pf;RS-.60 ohms;Pd-.50W max;F-.10GHz to 10GHz
76♦	A5S100	7	Si	M185e	Pin;Cap 150ff max;Rs 1.0Ω,VBR 100Vmin;Carrier Lifetime 100ns min.
77♦	A5S104	7	Si	F10ac	Pin;Pd 1 0W;Cap. 300ff max;Rs 1.5Ωmax;VBR 200Vmin;Carrier Lifetime 100ns min.
78♦	A5S105	7	Si	F10ac	Pin;Pd 3 0W;Cap. 320ff max;Rs 1.5Ωmax;VBR 150Vmin,Carrier Lifetime 100ns min
79♦	A5S106	7	Si	F27ah	Pin;Pd 3.0W;Cap. 320ff max;Rs 1.5Ωmax;VBR 200Vmin;Carrier Lifetime 100ns min
80♦	A5S107	7	Si	F27ah	Pin,Pd 3 0W,Cap 350ff max;Rs 1.5Ωmax;VBR 150Vmin,Carrier Lifetime 100ns min.
81	A5S110	7	Si	M185e	Pin;VBR 70V;Ct at 30V 200fF;Rs 1 0Ω;trr 5 0ns,IF 50mA.
82	A5S113	7	Si	F10ac	Pin,VBR 70V;Ct at 30V 400fF;Rs 1.0Ω,trr 5.0ns;IF 50mA.
83	A5S114	7	Si	F10ac	Pin,VBR 100V;Ct at 30V 450fF;Rs 1.5Ω;trr 10ns,IF 50mA.
84	A5S115	7	Si	F27af	Pin,VBR 70V,Ct at 30V 400fF;Rs 1.0Ω;trr 5.0ns;IF 50mA.
85	A5S116	7	Si	F27af	Pin;VBR 100V;Ct at 30V 450fF;Rs 1.5Ω;trr 100ns;IF 50mA.
86▼	A5S138	7		A1th	Pin;VBR 100Vmin;Cap 400ff max;Rs 2.5Ωmax;Carrier Lifetime 1.3us;Rev.Recovery Time 8 0us
87▼	A5S301	7		A1th	Pin,VBR 150Vmin,Cap300ffmax;Rs 1.2Ωmax;Carrier Lifetime 200ns;Rev Recovery time 300ns
88▼	A5S302	7		A1th	Pin;VBR 200Vmin;Cap 250ff max;Rs 1 0Ωmax,Carrier Lifetime 200ns;Rev Recovery Time 300ns
89▼	A5S339	7		A1th	Pin;VBR 100Vmin;Cap 300ff max;Rs 1.5Ωmax,Carrier Lifetime 200ns;Rev Recovery Time 300ns
90▼	A5S342	7		A1th	Pin;VBR 70Vmin,Cap 400ff max,Rs 1.0Ωmax;Carrier Lifetime 15ns;Rev Recovery Time 5 0ns
91#	BA243	7	Si$#	DO35	VHF Switch;VBF-20Vmin;C-2.0pFmax at 15V;Rs-1 0Ωmax at 10mA;LS-2.5nHtyp
92#	BA244	7	Si$#	DO35	UHF Switch,VBR-20Vmin,C-2 0pFmax at 15V·Rs-500mΩ max at 10mA;LS-2 5nH typ
93	CB101	7	Si	DO35	UHF/VHF Switch;BV50V,Ct2.0pf at 15V; RF 1 0Ωmax at 10mA
94	D5020	7	Si	F27g	Pin;VB 200V;Cj 150fF max at -50V;Rs 4.0Ω max
95	D5020A	7	Si	F27g	Pin,VB 200V,Cj 400fF max at -50V;Rs 2.8Ω max
96	D5020B	7	Si	F27g	Pin,VB 200V,Cj 600fF max. at -50V,Rs 1.2Ω max.
97	D5021	7	Si	F27g	Pin,VB 200V;Cj 150fF max. at -50V;Rs 4 0Ω max
98	D5021A	7	Si	F27g	Pin,VB 200V;Cj 400fF max at -50V;Rs 2 8Ω max
99	D5021B	7	Si	F27g	Pin,VB 200V,Cj 600fF max at -50V;Rs 1 2Ω max
100	D5022	7	Si	F27g	Pin,VB 500V,Cj 150fF max at -50V;Rs 4 0Ω max
101	D5022A	7	Si	F27g	Pin,VB 500V;Cj 400fF max. at -50V;Rs 2 8Ω max
102	D5022B	7	Si	F27g	Pin,VB 500V;Cj 600fF max at -50V;Rs 1 2Ω max
103	D5023	7	Si	F27g	Pin;VB 500V;Cj 150fF max at -50V;Rs 4.0Ω max
104	D5023A	7	Si	F27g	Pin,VB 500V;Cj 400fF max. at -50V;Rs 2 8Ω max
105	D5023B	7	Si	F27g	Pin;VB 500V;Cj 600fF max at -50V;Rs 1 2Ω max
106	D5024	7	Si	F27g	Pin,VB 750V;Cj 150fF max at -50V;Rs 4 0Ω max
107	D5024A	7	Si	F27g	Pin;VB 750V,Cj 400fF max. at -50V;Rs 2 8Ω max
108	D5024B	7	Si	F27g	Pin,VB 750V;Cj 600fF max at -50V;Rs 1 2Ω max
109	D5026	7	Si	F27g	Pin;VB 750V;Cj 150fF max at -50V;Rs 4 0Ω max
110	D5026A	7	Si	F27g	Pin;VB 750V,Cj 400fF max. at -50V;Rs 2 8Ω max

SYMBOLS AND CODES EXPLAINED IN INTERPRETER

12. MISCELLANEOUS DIODES

IN ORDER OF (1) USE and (2) TYPE No.

LINE No	2 TYPE No	1 USE	DESCRIPTION MAT.	DWG. No.	TECHNICAL DATA
1	D5026B	7	Si	F27g	Pin,VB 750V;Cj 600fF max at -50V,Rs 1 2Ω max
2	D5109-2	7		M576Ø	Multi-throw;VB 200V;Cj 200f at -50V;Rs 2.5Ω;Switching Time 20nS
3	D5109-4	7		M576aØ	Multi-throw;VB 200V,Cj 200f at -50V;Rs 2 5Ω;Switching Time 20nS
4	D5109-6	7		M576bØ	Multi-throw;VB 200V;Cj 200f at -50V;Rs 2 5Ω;Switching Time 20nS
5	D5109-8	7		M576cØ	Multi-throw,VB 200V;CJ 200f at -50V;Rs 2 5Ω,Switching Time 20nS
6	D5151	7	Si$	A1ak§	VB50V min,Pd 250mW,Ct 200pf max,Rs 3.0Ω max,Switching Time 2 5nS
7	D5151A	7	Si$	A1ak§	VB80V min,Pd 250mW;Ct 100pf max;Rs 2 5Ω max,Switching Time 2 5nS
8	D5151B	7	Si$	A1ak§	VB80V min,Pd 250mW;Ct .060pf max;Rs 2 5Ω max,Switching Time 2 5nS
9	D5167	7	Si∆$	P1a	BV-75V, Ct-.40pf; Zf-3.0 ohms; Ts-2.5ns; Pt-1 25W
10	D5320	7	Si	F54c	Pin,VB 200V;Cj 150fF max at -50V;Rs 4 0Ω max
11	D5320A	7	Si	F54c	Pin,VB 200V;Cj 400fF max at -50V;Rs 2 8Ω max
12	D5320B	7	Si	F54c	Pin,VB 200V,Cj 600fF max at -50V;Rs 1 2Ω max
13	D5321	7	Si	F54c	Pin;VB 200V;Cj 150fF max at -50V;Rs 4.0Ω max
14	D5321A	7	Si	F54c	Pin;VB 200V;Cj 400fF max. at -50V,Rs 2 8Ω max
15	D5321B	7	Si	F54c	Pin;VB 200V;Cj 600fF max at -50V;Rs 1 2Ω max
16	D5322	7	Si	F54c	Pin,VB 500V,Cj 150fF max. at -50V;Rs 4 0Ω max
17	D5322A	7	Si	F54c	Pin,VB 500V;Cj 400fF max at -50V,Rs 2 8Ω max
18	D5322B	7	Si	F54c	Pin;VB 500V;Cj 600fF max at -50V,Rs 1.2Ω max
19	D5323	7	Si	F54c	Pin,VB 500V,Cj 150fF max at -50V;Rs 4 0Ω max
20	D5323A	7	Si	F54c	Pin;VB 500V;Cj 400fF max. at -50V;Rs 2 8Ω max
21	D5323B	7	Si	F54c	Pin,VB 500V;Cj 600fF max at -50V;Rs 1 2Ω max
22	D5520	7	Si	F10ac	Pin;VB 200V;Cj 150fF max at -50V;Rs 4 0Ω max
23	D5520A	7	Si	F10ac	Pin,VB 200V;Cj 400fF max. at -50V;Rs 2 8Ω max
24	D5520B	7	Si	F10ac	Pin,VB 200V;Cj 600fF max. at -50V,Rs 1.2Ω max
25	D5521	7	Si	F10ac	Pin;VB 200V,Cj 150fF max at -50V;Rs 4 0Ω max
26	D5521A	7	Si	F10ac	Pin,VB 200V,Cj 400fF max at -50V,Rs 2 8Ω max
27	D5521B	7	Si	F10ac	Pin,VB 200V,Cj 600fF max at -50V;Rs 1.2Ω max
28	D5522	7	Si	F10ac	Pin;VB 500V;Cj 150fF max at -50V,Rs 4 0Ω max
29	D5522A	7	Si	F10ac	Pin;VB 500V;Cj 400fF max at -50V;Rs 2.8Ω max
30	D5522B	7	Si	F10ac	Pin;VB 500V;Cj 600fF max at -50V;Rs 1 2Ω max
31	D5523	7	Si	F10ac	Pin,VB 500V;Cj 150fF max at -50V;Rs 4 0Ω max
32	D5523A	7	Si	F10ac	Pin;VB 500V,Cj 400fF max at -50V;Rs 2.8Ω max
33	D5523B	7	Si	F10ac	Pin,VB 500V;Cj 600fF max at -50V;Rs 1.2Ω max.
34	D5650A	7	§	F54c	Pin,VB 200V min;Ct 230pf - 280pf at 50V,Rs 1 6Ω at 100mA;Switching Time 4 0nS
35	D5650B	7	§	F54c	Pin;VB 200V min;Ct 280pf - .330pf at 50V,Rs 1.0Ω at 100mA;Switching Time 4 0nS
36	D5650C	7	§	F54c	Pin;VB 200V min,Ct 330pf - 430pf at 50V;Rs 700mΩ at 100mA,Switching Time 4 0nS
37	D5650D	7	§	F54c	Pin;VB 200V min;Ct 430pf - .530pf at 50V;Rs 500mΩ at 100mA;Switching Time 4 0nS
38	D5650E	7	§	F54c	Pin;VB 200V min;Ct 530pf - 630pf at 50V;Rs 400mΩ at 100mA;Switching Time 4 0nS
39	D5668A	7	§	F10ac	Pin,VB 100V min;Ct 230pf - 280pf at 50V,Rs 1 6Ω at 100mA,Switching Time 4 0nS.
40	D5668B	7	§	F10ac	Pin,VB 100V min;Ct 280pf - .330pf at 50V,Rs 1 0Ω at 100mA;Switching Time 4 0nS.
41	D5668C	7	§	F10ac	Pin,VB 100V min,Ct 330pf - 430pf at 50V;Rs 700mΩ at 100mA;Switching Time 4 0nS
42	D5668D	7	§	F10ac	Pin;VB 100V min,Ct 430pf - 530pf at 50V;Rs 500mΩ at 100mA;Switching Time 4 0nS
43	D5668E	7	§	F10ac	Pin,VB 100V min,Ct 530pf - .630pf at 50V;Rs 400mΩ at 100mA;Switching Time 4 0nS
44	D5669A	7	§	F10ac	Pin,VB 200V min;Ct 230pf - .280pf at 50V;Rs 1 6Ω at 100mA,Switching Time 4 0nS
45	D5669B	7	§	F10ac	Pin;VB 200V min,Ct 280pf - .330pf at 50V;Rs 1.0Ω at 100mA;Switching Time 4 0nS.
46	D5669C	7	§	F10ac	Pin;VB 200V min;Ct 330pf - 430pf at 50V;Rs 700mΩ at 100mA;Switching Time 4 0nS
47	D5669D	7	§	F10ac	Pin;VB 200V min;Ct 430pf - .530pf at 50V,Rs 500mΩ at 100mA,Switching Time 4 0nS
48	D5669E	7	§	F10ac	Pin;VB 200V min;Ct 530pf - .630pf at 50V;Rs 400mΩ at 100mA,Switching Time 4 0nS
49	D5720	7	Si	A1ak	Pin;VB 200V;Cj 50fF at -50V,Rs 6.0Ω max
50	D5721	7	Si	A1ak	Pin;VB 200V;Cj 50fF at -50V,Rs 6.0Ω max
51	D5722	7	Si	A1ak	Pin;VB 500V,Cj 50fF at -50V;Rs 6.0Ω max
52	D5723	7	Si	A1ak	Pin;VB 500V,Cj 50fF at -50V;Rs 6 0Ω max
53	D5760A	7	Si	A1ak	Pin;VB 200V,Cj 80fF at -50V,Rs 7 0Ω max
54	D5760B	7	Si	A1ak	Pin;VB 200V;Cj 130fF at -50V;Rs 3.0Ω max
55	D5760C	7	Si	A1ak	Pin;VB 200V;Cj 230fF max. at -50V,Rs 2 1Ω max
56	D5760D	7	Si	A1ak	Pin;VB 200V;Cj 330fF max at -50V;Rs 1 5Ω max
57	D5761A	7	Si	A1ak	Pin;VB 200V;Cj 80fF max at -50V;Rs 7 0Ω max
58	D5761B	7	Si	A1ak	Pin;VB 200V;Cj 130fF max at -50V,Rs 3 0Ω max.
59	D5761C	7	Si	A1ak	Pin;VB 200V;Cj 230fF max. at -50V;Rs 2 1Ω max.
60	D5761D	7	Si	A1ak	Pin;VB 200V,Cj 330fF max at -50V;Rs 1 5Ω max
61	D5762A	7	Si	A1ak	Pin,VB 500V;Cj 80fF max. at -50V;Rs 7 0Ω max.
62	D5762B	7	Si	A1ak	Pin;VB 500V;Cj 130fF max at -50V;Rs 3 0Ω max
63	D5762C	7	Si	A1ak	Pin;VB 500V,Cj 230fF max. at -50V,Rs 2 1Ω max
64	D5762D	7	Si	A1ak	Pin;VB 500V,Cj 330fF max at -50V,Rs 1 5Ω max
65	D5763A	7	Si	A1ak	Pin;VB 500V,Cj 80fF max at -50V,Rs 7 0Ω max
66	D5763B	7	Si	A1ak	Pin,VB 500V;Cj 130fF max at -50V;Rs 3 0Ω max
67	D5763C	7	Si	A1ak	Pin,VB 500V,Cj 230fF max at -50V,Rs 2 1Ω max
68	D5763D	7	Si	A1ak	Pin;VB 500V;Cj 330fF max. at -50V,Rs 1.5Ω max
69	D5807A	7	§	F27g	Pin;VB 100V min;Ct 230pf -.280pf at 50V;Rs 1 6Ω at 100mA;Switching Time 4.0nS
70	D5807B	7	§	F27g	Pin;VB 100V min;Ct 280pf - 330pf at 50V;Rs 1 0Ω at 100mA,Switching Time 4 0nS
71	D5807C	7	§	F27g	Pin;VB 100V min;Ct 330pf - 430pf at 50V;Rs 700mΩ at 100mA;Switching Time 4 0nS
72	D5807D	7	§	F27g	Pin;VB 100V min;Ct 430pf -.530pf at 50V;Rs 500mΩ at 100mA,Switching Time 4 0nS
73	D5807E	7	§	F27g	Pin;VB 100V min;Ct 530pf -.630pf at 50V,Rs 400mΩ at 100mA,Switching Time 4 0nS
74	D5820	7	Si	F48e	Pin;VB 200V,Cj 200fF max at -50V;Rs 3.1Ω max
75	D5820A	7	Si	F48e	Pin;VB 200V;Cj 400fF max at -50V;Rs 1.25Ω max
76	D5820B	7	Si	F48e	Pin,VB 200V;Cj 600fF max at -50V;Rs 960Ω max
77	D5820C	7	Si	F48e	Pin;VB 200V;Cj 1.0pF max. at -50V;Rs 900Ω max
78	D5821	7	Si	F48e	Pin,VB 200V;Cj 200fF max at -50V;Rs 3 1Ω max
79	D5821A	7	Si	F48e	Pin,VB 200V;Cj 400fF max at -50V;Rs 1 25Ω max
80	D5821B	7	Si	F48e	Pin;VB 200V;Cj 600fF max. at -50V;Rs .960Ω max
81	D5821C	7	Si	F48e	Pin,VB 200V;Cj 1.0pF max. at -50V;Rs .800Ω max
82	D5822	7	Si	F48e	Pin,VB 500V;Cj 200pF max at -50V;Rs 3 1Ω max
83	D5822A	7	Si	F48e	Pin,VB 500V;Cj 400pF max. at -50V;Rs 1.25Ω max
84	D5822B	7	Si	F48e	Pin;VB 500V;Cj 600fF max. at -50V;Rs 960Ω max
85	D5822C	7	Si	F48e	Pin;VB 500V;Cj 1.0pF max. at -50V;Rs 800Ω max.
86	D5823	7	Si	F48e	Pin,VB 500V,Cj 200fF max at -50V;Rs 3.1Ω max.
87	D5823A	7	Si	F48e	Pin;VB 500V;Cj 400fF max at -50V;Rs 1.25Ω max.
88	D5823B	7	Si	F48e	Pin;VB 500V;Cj 600fF max at -50V;Rs .960Ω max.
89	D5823C	7	Si	F48e	Pin,VB 500V;Cj 1 0pF max. at -50V;Rs .800Ω max
90	D5824	7	Si	F48e	Pin,VB 750V;Cj 200fF max. at -50V;Rs 3.1Ω max
91	D5824A	7	Si	F48e	Pin;VB 750V;Cj 400fF max. at -50V;Rs 1.25Ω max
92	D5824B	7	Si	F48e	Pin;VB 750V;Cj 600fF max. at -50V;Rs .960Ω max
93	D5824C	7	Si	F48e	Pin,VB 750V;Cj 1.0pF max. at -50V;Rs .800Ω max.
94	D5825A	7	Si	F48c	BV-1000V,Ct-1 95pf max at 0.0V;Rs-1 7 ohms max;Ts-30nsec
95	D5825B	7	Si	F48c	BV-1000V;Ct-2 75pf max. at 0.0V;Rs-1.0 ohms max;Ts-50nsec
96	D5825C	7	Si	F48c	BV-1000V,Ct-3.85pf max at 0.0V;Rs- 70 ohms max;Ts-100nsec
97	D5826	7	Si	F48e	Pin;VB 750V;Cj 200fF max. at -50V;Rs 3.1Ω max
98	D5826A	7	Si	F48e	Pin;VB 750V;Cj 201fF max. at -50V;Rs 1.25Ω max.
99	D5826B	7	Si	F48e	Pin,VB 750V;Cj 600fF max. at -50V;Rs 960Ω max.
100	D5826C	7	Si	F48e	Pin;VB 750V;Cj 1 0pF max. at -50V;Rs .800Ω max
101	D5840	7	Si	M583	Pin;VB 60V min;Ct .010pf -.030pf at 50V;Rs 10Ω at 50mA;Carrier Lifetime 15nS
102	D5890A	7	§	F27g	Pin;VB 200V min;Ct .230pf -.280pf at 50V;Rs 1.6Ω at 100mA;Switching Time 4.0nS.
103	D5890B	7	§	F27g	Pin;VB 200V min;Ct 280pf -.330pf at 50V;Rs 1.0Ω at 100mA;Switching Time 4.0nS
104	D5890C	7	§	F27g	Pin;VB 200V min;Ct 330pf -.430pf at 50V;Rs 700mΩ at 100mA;Switching Time 4.0nS
105	D5890D	7	§	F27g	Pin;VB 200V min,Ct .430pf -.530pf at 50V;Rs 500mΩ at 100mA;Switching Time 4.0nS.
106	D5890E	7	§	F27g	Pin,VB 200V min;Ct .530pf -.630pf at 50V;Rs 400mΩ at 100mA;Switching Time 4.0nS
107	D5964A	7	§	A1ak	Pin;VB 100V min;Ct .100pf -.150pf at 50V;Rs 1 6Ω at 100mA;Switching Time 4 0nS
108	D5964B	7	§	A1ak	Pin,VB 100V min,Ct 150pf -.200pf at 50V;Rs 1.0Ω at 100mA;Switching Time 4.0nS
109	D5964C	7	§	A1ak	Pin,VB 100V min,Ct 200pf -.300pf at 50V;Rs 700mΩ at 100mA;Switching Time 4 0nS
110	D5964D	7	§	A1ak	Pin,VB 100V min,Ct 300pf -.400pf at 50V;Rs 500mΩ at 100mA;Switching Time 4 0nS.

SYMBOLS AND CODES EXPLAINED IN INTERPRETER

12. MISCELLANEOUS DIODES

IN ORDER OF (1) USE and (2) TYPE No.

LINE No.	2 TYPE No.	1 USE	DESCRIPTION MAT.	DESCRIPTION DWG. No.	TECHNICAL DATA
1	D5964E	7	§	A1ak	Pin;VB 100V min;Ct .400pf -.500pf at 50V;Rs 400Ω at 100mA;Switching Time 4.0nS.
2	D5982A	7	§	A1ak	Pin;VB 200V min;Ct 100pf -.150pf at 50V;Rs 1.6Ω at 100mA;Switching Time 4.0nS
3	D5982B	7	§	A1ak	Pin;VB 200V min;Ct .150pf -.200pf at 50V;Rs 1.0Ω at 100mA;Switching Time 4.0nS.
4	D5982C	7	§	A1ak	Pin;VB 200V min;Ct .200pf -.300pf at 50V;Rs 700mΩ at 100mA;Switching Time 4.0nS.
5	D5982D	7	§	A1ak	Pin;VB 200V min;Ct .300pf -.400pf at 50V;Rs 500mΩ at 100mA;Switching Time 4.0nS.
6	D5982E	7	§	A1ak	Pin;VB 200V min;Ct .400pf -.500pf at 50V;Rs 400mΩ at 100mA;Switching Time 4.0nS.
7	D5994A	7	§	F54c	Pin;VB 100V min;Ct .230pf -.280pf at 50V;Rs 1.6Ω at 100mA;Switching Time 4.0nS.
8	D5994B	7	§	F54c	Pin;VB 100V min;Ct .280pf -.330pf at 50V;Rs 1.0Ω at 100mA;Switching Time 4.0nS.
9	D5994C	7	§	F54c	Pin;VB 100V min;Ct .330pf -.430pf at 50V;Rs 700mΩ at 100mA;Switching Time 4.0nS.
10	D5994D	7	§	F54c	Pin;VB 100V min;Ct 430pf -.530pf at 50V;Rs 500mΩ at 100mA;Switching Time 4.0nS.
11	D5994E	7	§	F54c	Pin;VB 100V min;Ct .530pf -.630pf at 50V;Rs 400mΩ at 100mA;Switching Time 4.0nS.
12	D9011	7	Δ$	A1ak	Pin;VB 100V min;Ct 200fF max. at 50V;Carrier lifetime 45nS max;R at 10uA 700 min.
13	D9011A	7	Δ$	A1ak	Pin;VB 100V min;Ct 200fF max. at 50V;Carrier lifetime 45nS max;R at 10uA 1.0k min.
14	D9011B	7	Δ$	A1ak	Pin;VB 100V min;Ct 200fF max. at 50V;Carrier lifetime 45nS max;R at 10uA 1.0k min.
15	D9011C	7	Δ$	A1ak	Pin;VB 100V min;Ct 200fF max. at 50V;Carrier lifetime 45nS max;R at 10uA 1.0k min.
16	D9011D	7	Δ$	A1ak	Pin;VB 100V min;Ct 200fF max. at 50V;Carrier lifetime 45nS max;R at 10uA 800 min
17	D9011E	7	Δ$	A1ak	Pin;VB 100V min;Ct 200fF max. at 50V;Carrier lifetime 45nS max;R at 10uA 700 min.
18	D9012	7	Δ$	F27g	Pin;VB 100V min;Ct 350fF max. at 50V;Carrier lifetime 45nS max;R at 10uA 700 min.
19	D9012A	7	Δ$	F27g	Pin;VB 100V min;Ct 350fF max. at 50V;Carrier lifetime 45nS max;R at 10uA 1.0k min.
20	D9012B	7	Δ$	F27g	Pin;VB 100V min;Ct 350fF max. at 50V;Carrier lifetime 45nS max;R at 10uA 1.0k min.
21	D9012C	7	Δ$	F27g	Pin;VB 100V min;Ct 350fF max. at 50V;Carrier lifetime 45nS max;R at 10uA 1.0k min.
22	D9012D	7	Δ$	F27g	Pin;VB 100V min;Ct 350fF max. at 50V;Carrier lifetime 45nS max;R at 10uA 800 min
23	D9012E	7	Δ$	F27g	Pin;VB 100V min;Ct 350fF max. at 50V;Carrier lifetime 45nS max;R at 10uA 700 min
24	D9013	7	Δ$	F54c	Pin;VB 100V min;Ct 350fF max. at 50V;Carrier lifetime 45nS max;R at 10uA 700 min.
25	D9013A	7	Δ$	F54c	Pin;VB 100V min;Ct 350fF max. at 50V;Carrier lifetime 45nS max;R at 10uA 1.0k min.
26	D9013B	7	Δ$	F54c	Pin;VB 100V min;Ct 350fF max. at 50V;Carrier lifetime 45nS max;R at 10uA 1.0k min.
27	D9013C	7	Δ$	F54c	Pin;VB 100V min;Ct 350fF max. at 50V;Carrier lifetime 45nS max;R at 10uA 1.0k min.
28	D9013D	7	Δ$	F54c	Pin;VB 100V min;Ct 350fF max. at 50V;Carrier lifetime 45nS max;R at 10uA 800 min.
29	D9013E	7	Δ$	F54c	Pin;VB 100V min;Ct 350fF max. at 50V;Carrier lifetime 45nS max;R at 10uA 700 min.
30	D9014	7	Δ$	F10ac	Pin;VB 100V min;Ct 350fF max. at 50V;Carrier lifetime 45nS max;R at 10uA 700 min.
31	D9014A	7	Δ$	F10ac	Pin;VB 100V min;Ct 350fF max. at 50V;Carrier lifetime 45nS max;R at 10uA 1.0k min.
32	D9014B	7	Δ$	F10ac	Pin;VB 100V min;Ct 350fF max. at 50V;Carrier lifetime 45nS max;R at 10uA 1.0k min.
33	D9014C	7	Δ$	F10ac	Pin;VB 100V min;Ct 350fF max. at 50V;Carrier lifetime 45nS max;R at 10uA 1.0k min.
34	D9014D	7	Δ$	F10ac	Pin;VB 100V min;Ct 350fF max. at 50V;Carrier lifetime 45nS max;R at 10uA 800 min.
35	D9014E	7	Δ$	F10ac	Pin;VB 100V min;Ct 350fF max. at 50V;Carrier lifetime 45nS max;R at 10uA 700 min.
36	DSJ6110	7		S347	Pin;VB 300V;Isolation 25db;Insertion loss 400mdb;Switching Speed 200nS.
37	DSJ6111	7		S347	Pin;VB 200V;Isolation 20db;Insertion loss 500mdb;Switching Speed 100nS
38	DSJ6112	7		S347	Pin;VB 100V;Isolation 20db;Insertion loss 500mdb;Switching Speed 50nS.
39♦	GC4020	7	Si	A1am	BV 200V;Cj 100ff max at 50V;Rs 1.5Ωmax;Ts 5.0nsec.
40▼	GC4021	7	Si	F27an	BV 200V; Cj250ff max at 50V;Rs 700mΩmax; Ts 7.0nsec.
41▼	GC4022	7	Si	F27an	BV 200V; Cj 500ff max; at 50V;Rs 500mΩmax; Ts 10nsec.
42▼	GC4023	7	Si	F27an	BV 200V;Cj 750ff max at 50V;Rs 400mΩmax;Ts 13nsec
43▼	GC4050	7	Si	F27an	BV 500V;Cj 100ff max at 50V;Rs 1.5Ωmax;Ts 20nsec.
44▼	GC4051	7	Si	F27an	BV 500V;Cj 250ff max;at 50V;Rs 700mΩmax; Ts 23nsec
45▼	GC4052	7	Si	F27an	BV 500V;Cj 500ff max at 50V;Rs 500mΩmax;Ts 27nsec.
46▼	GC4053	7	Si	F27an	BV 500V;Cj 750ff max at 50V;Rs 400mΩmax;Ts 30nsec.
47▼	GC4054	7	Si	F27an	BV 500V;Cj 1.0pf max at 50V;Rs 300mΩmax,Ts 35nsec
48▼	GC4100	7	Si	A1am	BV 100;Ct 100ff at -30V;Rs 2.3Ω;Ts 1 0nsec.
49♦	GC4101	7	Si	A1am	BV 100;Ct 100ff at -30V;Rs 2.0Ω;Ts 2.5nsec.
50▼	GC4102	7	Si	A1am	BV 100;Ct 200ff at -30V;Rs 1.5Ω;Ts 2.5nsec.
51▼	GC4103	7	Si	A1am	BV 100;Ct 350ff at -30V;Rs 700mΩ;Ts 4 0nsec
52	H121	7	Si	A1ad	PIN;PIV-150V min;RS-1.5 ohm max;Ct-.60pf typ
53	HP33001A	7	#	A1ad	Pin;PIV-125V max,Rs-2.5 ohms max;Ct- 3Opf max. at 50V;Lifetime-100nsec.
54	HP33002A	7	#	A1ad	Pin;PIV-175V max;Rs-2.5 ohms max;Ct-.30pf max. at 50V;Lifetime-100nsec.
55	HP33101A	7	#	F10w	Pin;PIV-125V max,Rs-2.5 ohms max;Ct-.32pf max. at 50V;Lifetime-100nsec.
56	HP33102A	7	#	F10w	Pin;PIV-175V max;Rs-2.5 ohms max;Ct- 30pf max. at 50V;Lifetime-100nsec.
57	HP33201A	7	#	F27ab	Pin;PIV-125V max;Rs-2.5 ohms max;Ct-.35pf max. at 50V,Lifetime-100nsec
58	HP33202A	7	#	F27ab	Pin;PIV-175V max,Rs-2.5 ohms max;Ct-.32pf max. at 50V;Lifetime-100nsec.
59	L4120	7	Ge	F3q	Freq-X Band;10Gc;Incident Power 1.0W;Ins. Loss-1.5db max;Isol-20db min.
60	L4122	7	Ge	F3q	Freq-X Band;11.5Gc,Incident Power 1.0W,Ins Loss-1.5db max;Isol-20db min.
61	L4130	7	Ge	F3q	Freq-C Band;4.5Gc;Incident Power 1.0W;Ins. Loss-1 5db max;Iso-20db min.
62	L4131	7	Ge	F3q	Freq-C Band;5 0Gc;Incident Power 1.0W,Ins Loss-1.5db max;Iso-20db min.
63	L4132	7	Ge	F3q	Freq-C Band,5 5Gc;Incident Power 1.0W;Ins. Loss-1.5db max;Iso-20db min.
64	L4134	7	Ge	F3q	Freq-Xn Band;6.5Gc;Incident Power 1.0W;Ins Loss-1 5db max;Iso-20db min
65	L4135	7	Ge	F3q	Freq-Xn Band;7 0Gc,Incident Power 1.0W;Ins Loss-1 5db max;Iso-20db min.
66	L4136	7	Ge	F3q	Freq-X Band;11Gc;Incident Power 1.0W;Ins Loss-1.5db max;Isol-20db min.
67	L4138	7	Ge	F3q	Freq-Xn Band;7 5Gc;Incident Power 1.0W;Ins. Loss-1.5db max;Iso-20db min.
68	L4139	7	Ge	F3q	Freq-Xn Band;8 0Gc;Incident Power 1.0W;Ins. Loss-1.5db max;Iso-20db min
69	L4140	7	Ge	F3q	Freq-XI Band;7.5Gc;Incident Power 1.0W;Ins Loss-1.5db max;Iso-20db min.
70	L4141	7	Ge	F3q	Freq-XI Band;8.0Gc;Incident Power 1.0W;Ins. Loss-1 5db max;Iso-20db min
71	L4142	7	Ge	F3q	Freq-XI Band;8 5Gc;Incident Power 1.0W;Ins Loss-1 5db max;Iso-20db min
72	L4143	7	Ge	F3q	Freq-XI Band;9.0Gc;Incident Power 1.0W;Ins. Loss-1 5db max;Iso-20db min
73	L4144	7	Ge	F3q	Freq-XI Band;9.5Gc;Incident Power 1.0W;Ins Loss-1 5db max;Iso-20db min
74	L4145	7	Ge	F3q	Freq-X Band;8.5Gc;Incident Power 1.0W;Ins. Loss-1.5db max;Iso-20db min
75	L4146	7	Ge	F3q	Freq-X Band;9.5Gc;Incident Power 1.0W;Ins. Loss-1.5db max;Isol-20db min.
76	L4147	7	Ge	F3q	Freq-X Band;10 5Gc;Incident Power 1.0W;Ins. Loss-1 5db max;Isol-20db min
77	L4702	7	Si$	F3f	Freq -C Band, 4 5Gc;Incident power 5.0W;Ins. Loss-1 5db max;Iso-25db min.
78	L4703	7	Si$	F3f	Freq.-C Band,5 0Gc;Incident Power 5.0W;Ins. loss-1.5db max;Iso-25db min.
79	L4704	7	Si$	F3f	Freq.-C Band,5 5Gc;Incident Power 2.5W;Ins loss-1 5db max;Iso-20db min.
80	L4705	7	Si$	F3f	Freq -Xn Band,6 0Gc;Incident Power 5.0W;Ins loss-1.5db max;Iso-25db min.
81	L4706	7	Si$	F3f	Freq.-Xn Band,6 5Gc;Incident Power 5.0W;Ins. loss-1.5db max;Iso-25db min
82	L4707	7	Si$	F3f	Freq -Xn Band,7 0Gc,Incident Power 4.0W,Ins loss-1 5db max;Iso-25db min
83	L4708	7	Si$	F3f	Freq.-Xn Band,7.5Gc;Incident Power 3.0W;Ins. loss-1.5db max;Iso-25db min.
84	L4709	7	Si$	F3f	Freq.-Xn Band,8.0Gc;Incident Power 2.5W;Ins. loss-1.5db max;Iso-20db min
85	L4710	7	Si$	F3f	Freq.-XI Band,7.5Gc;Incident Power 5.0W;Ins loss-1.5db max;Iso-25db min
86	L4711	7	Si$	F3f	Freq.-XI Band,8 0Gc;Incident Power 5.0W;Ins loss-1 5db max;Iso-25db min.
87	L4712	7	Si$	F3f	Freq.-XI Band,8 5Gc;Incident Power 4.0W;Ins. loss-1.5db max;Iso-25db min.
88	L4713	7	Si$	F3f	Freq -XI Band,9 0Gc;Incident Power 3.0W;Ins. loss-1.5db max;Iso-25db min.
89	L4714	7	Si$	F3f	Freq.-XI Band,9.5Gc,Incident Power 2.5W;Ins. loss-1.5db max;Iso-25db min
90	L4715	7	Si$	F3f	Freq.-X Band,8 5Gc;Incident Power 5.0W;Ins. loss-1.5db max;Iso-25db min.
91	L4716	7	Si$	F3f	Freq -X Band,9 0Gc;Incident Power 5.0W;Ins loss-1 5db max;Iso-25db min.
92	L4717	7	Si$	F3f	Freq.-X Band,9 5Gc;Incident Power 5 0W;Ins. loss-1 5db max;Iso-25db min.
93	L4718	7	Si$	F3f	Freq -X Band,10Gc;Incident Power 5.0W,Ins. loss-1.5db max;Iso-25db min.
94	L4719	7	Si$	F3f	Freq -X Band,10 5Gc;Incident Power 4.0W;Ins. loss-1 5db max;Iso-25db min.
95	L4720	7	Si$	F3f	Freq -X Band,11Gc;Incident Power 3.0W;Ins loss-1.5db max;Iso-25db min
96	L4721	7	Si$	F3f	Freq -X Band,11.5Gc,Incident Power 2 5W,Ins. loss-1.5db max;Iso-25db min.
97	L4722	7	Si$	F3f	Freq -X Band,12Gc,Incident Power 2 5W,Ins loss-1 5db max;Iso-25db min
98	L4750	7	Si$	F3f	Freq -Ku Band,13Gc;Incident Power 5.0W,Ins loss-1 2db max,Iso-25db min
99	L4751	7	Si$	F3f	Freq -Ku Band,13.3Gc;Incident Power 5.0W;Ins. loss-1.2db max;Iso-25db min.
100	L4752	7	Si$	F3f	Freq -Ku Band,14Gc,Incident Power 5 0W;Ins loss-1 2db max;Iso-25db min.
101	L4753	7	Si$	F3f	Freq -Ku Band,14 5Gc;Incident Power 4 0W;Ins loss-1 2db max;Iso-25db min.
102	L4754	7	Si$	F3f	Freq.-Ku Band,15Gc;Incident Power 4 0W;Ins loss-1 2db max,Iso-25db min.
103	L4755	7	Si$	F3f	Freq.-Ku Band,15 5Gc;Incident Power 3.0W;Ins. loss-1.2db max;Iso-25db min
104	L4756	7	Si$	F3f	Freq -Ku Band,16Gc,Incident Power 2 5W;Ins loss-1.2db max;Iso-25db min.
105	L4757	7	Si$	F3f	Freq -Ku Band,16.5Gc;Incident Power 2.5W,Ins. loss-1 2db max;Iso-25db min.
106	L4758	7	Si$	F3f	Freq -Ku Band,17Gc;Incident Power 2.5W;Ins. loss-1 2db max;Iso-22db min
107	L4759	7	Si$	F3f	Freq -Ku Band,17 5Gc,Incident Power 2 5W;Ins. loss-1 5db max;Iso-20db min.
108	L4765	7	Si$	F32b	K band;TST Freq -20 5Gc/s;Pi-2 0Wmax;If-50mA;VR-50V.
109	L4766	7	Si$	F32b	K band;TST Freq -21Gc/s;Pi-2.0W max;If-50mA;VR-50V
110	L4767	7	Si$	F32b	K band,TST Freq -21 5Gc/s;Pi-2 0W max;If-50mA,VR-50V.

SYMBOLS AND CODES EXPLAINED IN INTERPRETER

12. MISCELLANEOUS DIODES

IN ORDER OF (1) USE and (2) TYPE No.

LINE No.	2 TYPE No	1 USE	DESCRIPTION MAT	DWG No	TECHNICAL DATA
1	L4768	7	Si$	F32b	K band;TST Freq -22Gc/s;Pi-2.0W max;If-50mA,VR-50V
2	L4769	7	Si$	F32b	K band,TST Freq -22 5Gc/s;Pi-2 0W max;If-50mA,VR-50V
3	L4770	7	Si$	F32b	K band;TST Freq.-23Gc/s;Pi-2.0W max;If-50mA;VR-50V
4	L4771	7	Si$	F32b	K band;TST Freq -23.5Gc/s;Pi-2 0W max;If-50mA;VR-50V
5	L4772	7	Si$	F32b	K band,TST Freq -24Gc/s;Pi-2 0W max;If-50mA;VR-50V
6	L4773	7	Si$	F32b	K band;TST Freq.-24.5Gc/s;Pi-2 0W max;If-50mA,VR-50V.
7	L4774	7	Si$	F32b	K band;TST Freq -25Gc/s,Pi-2 0W max;If-50mA;VR-50V.
8	L4775	7	Si$	F32b	K band,TST Freq -25 5Gc/s;Pi-2 0W max;If-50mA;VR-50V.
9	L4776	7	Si$	F32b	K band;TST Freq -26Gc/s,Pi-2.0W max;If-50mA;VR-50V.
10	L8350	7	Si#$		PIN Switching Diode;VB 150V;Ct(at-50V)1.0MHz 200ff;Rs at 100mA,500MHz 2 5;T(L) 300nsec
11	L8351	7	Si#$		PIN Switching Diode;VB 150V;Ct(at-50V)1.0MHz 400ff;Rs at 100mA,500MHz 2.5;T(L) 300nsec.
12	L8352	7	Si#$		PIN Switching Diode;VB 150V;Ct(at-50V)1.0MHz 400ff;Rs at 100mA,500MHz 2.5;T(L) 300nsec.
13	L8353	7	Si#$		PIN Switching Diode,VB 450V;Ct(at-50V)1 0MHz 550ff,Rs at 100mA,500MHz 1.5;T(L) 300nsec
14	L8354	7	Si#$		PIN Switching Diode;VB 450V;Ct(at-50V)1.0MHz 550ff;Rs at 100mA,500MHz 1.5;T(L) 300nsec
15	L8355	7	Si#$		PIN Switching Diode,VB 600V;Ct(at-50V)1 0MHz 600ff;Rs at 100mA,500MHz 1.5;T(L) 300nsec
16	L8356	7	Si#$		PIN Switching Diode;VB 600V;Ct(at-50V)1 0MHz 600ff;Rs at 100mA,500MHz 1.5;T(L) 300nsec
17	L8360	7	Si#$		Integrated pin stripline switching diode;VB 70V;Isolation at I(F) of 100mA 20db
18	L8370	7	Si#$		Integrated pin switch module;VB 70V;Insertion loss 700m db; Isolation 45 db
19	L8380	7	Si#$		Integrated pin switch module,VB 70V;Insertion loss 700m db, Isolation 45 db
20	L8700	7	SiΔ$	A1ad	BV-80V;Ct at 20V-.20pf DYN FWD Impedance-3 0ohms;Ts-1 0ns
21	L8700A	7	SiΔ$	A1ad	BV-80V;Ct at 20V-.20pf DYN FWD Impedance-1 5ohms,Ts-1.0ns
22	L8701	7	SiΔ$	A1ad	BV-80V,Ct at 20V- 10pf DYN FWD Impedance-3 0ohms;Ts-1 0ns
23	L8701A	7	SiΔ$	A1ad	BV-80V;Ct at 20V- 10pf DYN FWD Impedance-2.0ohms,Ts-1 0ns
24	L8702	7	SiΔ$	A1ad	BV-80V;Ct at 20V- 09pf DYN FWD Impedance-4.0ohms;Ts-1 0ns
25	L8702A	7	SiΔ$	A1ad	BV-80V,Ct at 20V- 09pf DYN FWD Impedance-2 5ohms;Ts-1 0ns.
26	L8703	7	SiΔ$	A1ad	BV-80V;Ct at 20V- 08pf DYN FWD Impedance-5.0ohms;Ts-1.0ns
27	L8703A	7	SiΔ$	A1ad	BV-80V;Ct at 20V-.08pf DYN FWD Impedance-3 0ohms;Ts-1.0ns
28	L8704	7	SiΔ$	A1ad	BV-80V,Ct at 20V- 07pf DYN FWD Impedance-6.0ohms,Ts-1 0ns.
29	L8704A	7	SiΔ$	A1ad	BV-80V;Ct at 20V- 07pf DYN FWD Impedance-5.0ohms;Ts-1 0ns
30	MA4011B	7	Si	F27d	Pin,S band;VB-200V min;Ctotal-.75pf;RS-4.0 ohms max
31	MA4011C	7	Si	F3a	Pin,L band;VB-200V min;Ctotal-1 5pf;RS-2 5 ohms max
32	MA4011D	7	Si	F3a	Pin;UHF band;VB-200V min;Ctotal-3 0pf;RS-2 0 ohms max.
33	MA4544	7	Si	DO7	Pin,VB-100V,Ct at 50V-.50pf;Rs-2.0 ohms
34	MA47000	7	Si	M380	Pin;Ct at 250V-3 2pf max;Rs at 150mA-.40 ohms max;BV-750V min.
35	MA47001	7	Si	M380	Pin,Ct at 250V-2 0pf max;Rs at 150mA- 70 ohms max;BV-750V min
36	MA47002	7	Si	M380	Pin,Ct at 250V-3.2pf max;Rs at 150mA- 40 ohms max;BV-500V min
37	MA47003	7	Si	M380	Pin,Ct at 250V-2 0pf max;Rs at 150mA-.70 ohms max;BV-500V min
38	MA47004	7	Si	S107	Pin,Ct at 150V-1 2pf max;Rs at 100mA-.80 ohms max;BV-500V min
39	MA47005	7	Si	F27d	Pin;Ct at 50V-.60pf max,Rs at 100mA-2.0 ohms max;BV-800V min
40	MA47006	7	Si	F27d	Pin;Ct at 50V-.60pf max;Rs at 100mA-1.5 ohms max;BV-800V min
41	MA47007	7	Si	F27d	Pin;Ct at 50V- 80pf max;Rs at 100mA-1.7 ohms max,BV-800V min
42	MA47008	7	Si	F27d	Pin;Ct at 50V- 80pf max,Rs at 100mA-1.2 ohms max;BV-800V min.
43	MA47009	7	Si	F27d	Pin;Ct at 50V-1 1pf max;Rs at 100mA-1 5 ohms max;BV-800V min.
44	MA47010	7	Si	F27d	Pin;Ct at 50V-1.1pf max,Rs at 100mA-1 0 ohms max;BV-800V min.
45	MA47011	7	Si	F27d	Pin;Ct at 50V-.60pf max;Rs at 100mA-1 4 ohms max;BV-600V min.
46	MA47012	7	Si	F27d	Pin;Ct at 50V- 60pf max,Rs at 100mA-1.1 ohms max;BV-600V min.
47	MA47013	7	Si	F27d	Pin;Ct at 50V- 80pf max;Rs at 100mA-1.1 ohms max;BV-600V min
48	MA47014	7	Si	F27d	Pin;Ct at 50V-.80pf max;Rs at 100mA-.90 ohms max;BV-600V min
49	MA47015	7	Si	F27d	Pin;Ct at 50V-1 1pf max;Rs at 100mA-1.0 ohms max,BV-600V min.
50	MA47016	7	Si	F27d	Pin;Ct at 50V-1.1pf max;Rs at 100mA-.80 ohms max,BV-600V min
51	MA47017	7	Si	F27d	Pin;Ct at 50V-1.7pf max;Rs at 100mA- 90 ohms max;BV-600V min
52	MA47018	7	Si	F27d	Pin;Ct at 50V-1.7pf max;Rs at 100mA-.70 ohms max;BV-600V min
53	MA47019	7	Si	F27d	Pin;Ct at 50V- 60pf max,Rs at 100mA-1.2 ohms max,BV-400V min
54	MA47020	7	Si	F27d	Pin;Ct at 50V-.60pf max;Rs at 100mA-.90 ohms max;BV-400V min.
55	MA47021	7	Si	F27d	Pin;Ct at 50V- 80pf max;Rs at 100mA-.90 ohms max;BV-400V min.
56	MA47022	7	Si	F27d	Pin;Ct at 50V- 80pf max;Rs at 100mA- 70 ohms max;BV-400V min.
57	MA47023	7	Si	F27d	Pin;Ct at 50V-1 1pf max;Rs at 100mA- 80 ohms max,BV-400V min.
58	MA47024	7	Si	F27d	Pin;Ct at 50V-1 1pf max,Rs at 100mA- 60 ohms max;BV-400V min
59	MA47025	7	Si	F27d	Pin;Ct at 50V-1.7pf max;Rs at 100mA-.70 ohms max;BV-400V min.
60	MA47026	7	Si	F27d	Pin;Ct at 50V-1 7pf max;Rs at 100mA-1.5 ohms max,BV-400V min
61	MA47027	7	Si	F27d	Pin;Ct at 50V-.40 max,Rs at 100mA-1 2 ohms max,BV-300V min.
62	MA47028	7	Si	F27d	Pin;Ct at 50V- 60 max;Rs at 100mA-1.0 ohms max;BV-300V min
63	MA47029	7	Si	F27d	Pin;Ct at 50V- 40 max,Rs at 100mA-1 2 ohms max;BV-200V min.
64	MA47030	7	Si	F27d	Pin;Ct at 50V- 60 max;Rs at 100mA-1 0 ohms max;BV-200V min.
65	MA47031	7	Si	F27d	Pin;Ct at 50V- 35 max;Rs at 100mA-1 0 ohms max;BV-300V min
66	MA47032	7	Si	F27d	Pin;Ct at 50V-.40 max,Rs at 100mA-.80 ohms max;BV-300V min
67	MA47033	7	Si	F27d	Pin;Ct at 50V- 45 max,Rs at 100mA-.80 ohms max;BV-300V min.
68	MA47034	7	Si	F27d	Pin;Ct at 50V-.35 max,Rs at 100mA-1 0 ohms max;BV-150V min
69	MA47035	7	Si	F27d	Pin;Ct at 50V-.40 max;Rs at 100mA- 80 ohms max;BV-150V min
70	MA47036	7	Si	F27d	Pin;Ct at 50V-.45 max;Rs at 100mA- 70 ohms max;BV-150V min
71	MA47037	7	Si	F27d	Pin,Ct at 30V- 30 max;Rs at 30mA-2 5 ohms max,BV-150V min
72	MA47038	7	Si	F27d	Pin;Ct at 30V-.40 max,Rs at 30mA-2 0 ohms max,BV-150V min
73	MA47039	7	Si	F27d	Pin;Ct at 30V-.30pf max,Rs at 30mA-2 5 ohms max;BV-75V min.
74	MA47040	7	Si	F27d	Pin;Ct at 30V-.40pf max,Rs at 30mA-2 0 ohms max;BV-75V min
75	MA47041	7	Si	A1ad	Pin,Ct at 30V- 10pf max;Rs at 30mA-2 5 ohms max;BV-150V min
76	MA47042	7	Si	A1ad	Pin;Ct at 30V- 20pf max,Rs at 30mA-2.0 ohms max;BV-150V min.
77	MA47043	7	Si	A1ad	Pin;Ct at 30V-.30pf max,Rs at 30mA-1 5 ohms max;BV-150V min.
78	MA47044	7	Si	A1ad	Pin;Ct at 30V- 10pf max;Rs at 30mA-2 5 ohms max;BV-75V min
79	MA47045	7	Si	A1ad	Pin;Ct at 30V- 20pf max;Rs at 30mA-2.0 ohms max,BV-75V min
80	MA47046	7	Si	A1ad	Pin;Ct at 30V- 30pf max;Rs at 30mA-1 5 ohms max;BV-75V min
81	MA47047	7	Si	A1ad	Pin,Ct at 50V- 30pf max,Rs at 50mA-1 5 ohms max,BV-200V min
82	MA47051	7	Si	F27f	Pin,CT at 10V 350ff;RS 1 0Ω max;BV 100V;Thermal Res 40°C/W max.
83	MA47052	7	Si	F27f	Pin,CT at 10V 300ff;RS 1 5Ω max;BV 200V,Thermal Res. 40°C/W max
84	MA47054	7	Si	A1ad	Pin,CT at 10V 250ff;RS 1.0Ω max,BV 100V,Thermal Res 50°C/W max.
85	MA47075	7	Si	F27f	Pin,CT at 100V 300-400ff;RS 1 2Ω max;BV 1 0kV;Thermal Res 30°C/W max.
86	MA47076	7	Si	F27f	Pin,CT at 100V 300-400ff;RS 1.2Ω max;BV 750V;Thermal Res. 30°C/W max.
87	MA47077	7	Si	F27f	Pin,CT at 100V 600-800ff;RS 700mΩ max;BV 1.0kV;Thermal Res. 25°C/W max.
88	MA47078	7	Si	F27f	Pin,CT at 100V 600-800ff;RS 700mΩ max;BV 750V;Thermal Res 25°C/W max
89	MA47079	7	Si	F27f	Pin,CT at 100V 200-400ff;RS 600mΩ max;BV 500V,Thermal Res 25°C/W max
90	MA47080	7	Si	F27f	Pin,CT at 100V 400-600ff,RS 450mΩ max;BV 500V;Thermal Res. 15°C/W max
91	MA47081	7	Si	F27f	Pin,CT at 100V 600-300ff;RS 300mΩ max;BV 500V,Thermal Res. 10°C/W max
92	MA47082	7	Si	F27f	Pin,CT at 50V 200-400ff;RS 600mΩ max;BV 300V;Thermal Res 20°C/W max.
93	MA47084	7	Si	S250f	Pin,CT at 250V 2.6-3.8pf;RS 300mΩ max;BV 1 0kV;Thermal Res.4.0°C/W max.
94	MA47085	7	Si	F27f	Pin,CT at 10V 400ff max;RS 1 0Ω max;BV 40-60Vdc;Thermal Res 40°C/W max;fc0 200GHz
95	MA47086	7	Si	F27f	Pin,CT at 10V 400ff max;RS 1.0Ω max;BV 80-120Vdc;Thermal Res 40°C/W max;fc0 150GHz.
96	MC500A	7	Si	M277c	BV-1000V min;Cap - 30pf at 100V;Series Resistance-2 0 ohms max
97	MC500B	7	Si	A2d	BV-1000V min;Cap.-.30pf at 100V;Series Resistance-2.0 ohms max.
98	MC501A	7	Si	M277c	BV-1000V min;Cap -.30pf at 100V;Series Resistance- 75ohms max.
99	MC501B	7	Si	A2d	BV-1000V min,Cap -.30pf at 100V;Series Resistance-.75ohms max.
100	MC502A	7	Si	M277c	BV-1000V min;Cap.-.60pf at 100V;Series Resistance-2.0 ohms max.
101	MC502B	7	Si	A2d	BV-1000V min;Cap -.60pf at 100V;Series Resistance-2.0 ohms max
102	MC503A	7	Si	M277c	BV-1000V min;Cap -.60pf at 100V;Series Resistance-.75ohms max.
103	MC503B	7	Si	A2d	BV-1000V min;Cap.-.60pf at 100V;Series Resistance- 75ohms max
104	MC504A	7	Si	M277c	BV-1000V min;Cap.-.90pf at 100V;Series Resistance-2.0 ohms max.
105	MC504B	7	Si	A2d	BV-1000V min,Cap.-.90pf at 100V;Series Resistance-2.0 ohms max.
106	MC505A	7	Si	M277c	BV-1000V min,Cap.-.90pf at 100V;Series Resistance- 75ohms max.
107	MC505B	7	Si	A2d	BV-1000V min;Cap.-.90pf at 100V;Series Resistance-.75ohms max
108	MC506A	7	Si	M277c	BV-1000V min;Cap -1 2pf at 100V;Series Resistance-2 0 ohms max.
109	MC506B	7	Si	A2d	BV-1000V min,Cap.-1.2pf at 100V;Series Resistance-2.0 ohms max.
110	MC507A	7	Si	M277c	BV-1000V min;Cap -1 2pf at 100V;Series Resistance- 75ohms max.

SYMBOLS AND CODES EXPLAINED IN INTERPRETER

12. MISCELLANEOUS DIODES

IN ORDER OF (1) USE and (2) TYPE No.

LINE No.	2 TYPE No.	1 USE	DESCRIPTION MAT	DWG. No	TECHNICAL DATA
1	MC507B	7	Si	A2d	BV-1000V min;Cap-1.2pf at 100V;Series Resistance-.75ohms max
2	MC508A	7	Si	M277c	BV-800V min,Cap.-.90pf at 100V;Series Resistance-2.0 ohms max
3	MC508B	7	Si	A2d	BV-800V min;Cap-.90pf at 100V;Series Resistance-2.0 ohms max.
4	MC509A	7	Si	M277c	BV-800V min,Cap-.90pf at 100V;Series Resistance-.75ohms max.
5	MC509B	7	Si	A2d	BV-800V min;Cap-.90pf at 100V;Series Resistance-.75ohms max.
6	MC510A	7	Si	M277c	BV-800V min;Cap-1.2pf at 100V;Series Resistance-2.0 ohms max.
7	MC510B	7	Si	A2d	BV-800V min;Cap-1.2pf at 100V,Series Resistance-2.0 ohms max.
8	MC511A	7	Si	M277c	BV-800V min;Cap-1.2pf at 100V;Series Resistance-.75ohms max.
9	MC511B	7	Si	A2d	BV-800V min;Cap.-1.2pf at 100V;Series Resistance-.75ohms max.
10	MC512A	7	Si	M277c	BV-800V min;Cap-1.5pf at 100V;Series Resistance-2.0 ohms max
11	MC512B	7	Si	A2d	BV-800V min;Cap.-1.5pf at 100V;Series Resistance-2.0 ohms max
12	MC513A	7	Si	M277c	BV-800V min;Cap.-1.5pf at 100V;Series Resistance-.75ohms max.
13	MC513B	7	Si	A2d	BV-800V min;Cap.-1.5pf at 100V;Series Resistance-.75ohms max.
14	MC514A	7	Si	M277c	BV-800V min;Cap.-1.8pf at 100V;Series Resistance-2.0 ohms max
15	MC514B	7	Si	A2d	BV-800V min;Cap.-1.8pf at 100V;Series Resistance-2.0 ohms max
16	MC515A	7	Si	M277c	BV-800V min;Cap-1.8pf at 100V;Series Resistance-.75ohms max
17	MC515B	7	Si	A2d	BV-800V min;Cap-1.8pf at 100V;Series Resistance-.75ohms max
18	MC516A	7	Si	M277c	BV-600V min;Cap.-1.5pf at 100V;Series Resistance-2.0 ohms max
19	MC516B	7	Si	A2d	BV-600V min;Cap-1.5pf at 100V;Series Resistance-2.0 ohms max
20	MC517A	7	Si	M277c	BV-600V min;Cap-1.5pf at 100V;Series Resistance-.75ohms max
21	MC517B	7	Si	A2d	BV-600V min;Cap-1.5pf at 100V;Series Resistance-.75ohms max
22	MC518A	7	Si	M277c	BV-600V min;Cap.-1.8pf at 100V;Series Resistance-2.0 ohms max.
23	MC518B	7	Si	A2d	BV-600V min;Cap-1.8pf at 100V;Series Resistance-2.0 ohms max
24	MC519A	7	Si	M277c	BV-600V min;Cap-1.8pf at 100V;Series Resistance-.75ohms max.
25	MC519B	7	Si	A2d	BV-600V min;Cap-1.8pf at 100V;Series Resistance-.75ohms max
26	MC1354	7	Si	A2g	PIV-750V;IR-.02uA at VR-200V;Pd-300mW max.
27	MC1444	7	Si	A2g	PIV-1500V;IR-.02uA at VR-1000V;Pd-300mW max.
28	MC1462	7	Si	A2d	PIV-750V,IR-10uA at VR-600V;Pd-750mW max.
29	MC1465	7	Si	A2g	PIV-1100V;IR-10uA at VR-1000V;Pd-300mW max
30▼	MD431A	7	#	F27ag	BV 50V at Ir 10uA,Rs 3.5Ω at If 100mA;Cap.200ffmax at Vr 50V;Lifetime 2.5ns
31▼	MD431B	7	#	A1cy	BV 50V at Ir 10uA;Rs 3.5Ω at If 100mA;Cap.200ffmax at Vr 50V,Lifetime 2.5ns
32▼	MD431C	7	#	A1tg	BV 50V at Ir 10uA;Rs 3.5Ω at If 100mA;Cap.200ffmax at Vr 50V,Lifetime 2.5ns.
33▼	MD432A	7	#	F27ag	BV 100V at Ir 10uA,Rs 3.0Ω at If 100mA;Cap.150ffmax at Vr 50V;Lifetime 2.5ns
34▼	MD432B	7	#	A1cy	BV 100V at Ir 10uA;Rs 3.0Ω at If 100mA;Cap.150ffmax at Vr 50V;Lifetime 2.5ns
35▼	MD432C	7	#	A1tg	BV 100V at Ir 10uA,Rs 3.0Ω at If 100mA;Cap.150ff max at Vr 50V;Lifetime 2.5ns
36▼	MD433A	7	#	F27ag	BV 100V at Ir 10uA;Rs 2.0Ω at If 100mA;Cap.600ff max at Vr 50V;Lifetime 120ns.
37▼	MD433B	7	#	A1cy	BV 100V at Ir 10uA,Rs 2.0Ω at If 100mA;Cap.600ff max at Vr 50V;Lifetime 120ns
38▼	MD433C	7	#	A1tg	BV 100V at Ir 10uA,Rs 2.0Ω at If 100mA;Cap.600ff max at Vr 50V;Lifetime 120ns.
39▼	MD434A	7	#	F27ag	BV 100V at Ir 10uA;Rs 2.5Ω at If 100mA;Cap.400ff max at Vr 50V;Lifetime 100ns.
40▼	MD434B	7	#	A1cy	BV 100V at Ir 10uA,Rs 2.5Ω at If 100mA;Cap.400ff max at Vr 50V;Lifetime 100ns.
41▼	MD434C	7	#	A1tg	BV 100V at Ir 10uA;Rs 2.5Ω at If 100mA;Cap.400ff max at Vr 50V;Lifetime 100ns
42▼	MD435A	7	#	F27ag	BV 100V at Ir 10uA;Rs 3.0Ω at If 100mA;Cap.300ff max at Vr 50V;Lifetime 45ns.
43▼	MD435B	7	#	A1cy	BV 100V at Ir 10uA;Rs 3.0Ω at If 100mA;Cap 300ff max at Vr 50V;Lifetime 45ns.
44▼	MD435C	7	#	A1tg	BV 100V at Ir 10uA,Rs 3.0Ω at If 100mA;Cap.300ff max at Vr 50V;Lifetime 45ns
45▼	MD436A	7	#	F27ag	BV 100V at Ir 10uA;Rs 7.0Ω at If 100mA;Cap.200ff max at Vr 50V;Lifetime 45ns.
46▼	MD436B	7	#	A1cy	BV 100V at Ir 10uA;Rs 7.0Ω at If 100mA;Cap 200ff max at Vr 50V,Lifetime 45ns.
47▼	MD436C	7	#	A1tg	BV 100V at Ir 10uA;Rs 7.0Ω at If 100mA;Cap.200ff max at Vr 50V,Lifetime 45ns
48▼	MD437A	7	#	F27ag	BV 100V at Ir 10uA;Rs 2.0Ω at If 100mA;Cap.350ff max at Vr 50V;Lifetime 50ns.
49▼	MD437B	7	#	A1cy	BV 100V at Ir 10uA,Rs 2.0Ω at If 100mA;Cap.350ff max at Vr 50V;Lifetime 50ns
50▼	MD437C	7	#	A1tg	BV 100V at Ir 10uA;Rs 2.0Ω at If 100mA;Cap.350ff max at Vr 50V;Lifetime 50ns
51▼	MD438A	7	#	F27ag	BV 200V at Ir 10uA,Rs 2.0Ω at If 100mA,Cap.300ff max at Vr 50V;Lifetime 80ns.
52▼	MD438B	7	#	A1cy	BV 200V at Ir 10uA;Rs 2.0Ω at If 100mA,Cap 300ff max at Vr 50V,Lifetime 80ns.
53▼	MD438C	7	#	A1tg	BV 200V at Ir 10uA;Rs 2.0Ω at If 100mA;Cap.300ff max at Vr 50V;Lifetime 80ns.
54▼	MD439A	7	#	F27ag	BV200V at Ir 10uA,Rs 1.6Ω at If 100mA,Cap 400ff max at Vr50V,Lifetime 130ns
55▼	MD439B	7	#	A1cy	BV200V at Ir 10uA,Rs 1.6Ω at If 100mA;Cap 400ff max at Vr50V;Lifetime 130ns
56▼	MD439C	7	#	A1tg	BV200V at Ir 10uA,Rs 1.6Ω at If 100mA;Cap 400ff max at Vr50V,Lifetime 130ns
57▼	MD440A	7	#	F27ag	BV200V at Ir 10uA;Rs 1.2Ω at If 100mA;Cap 500ff max at Vr50V;Lifetime 225ns.
58▼	MD440B	7	#	A1cy	BV200V at Ir 10uA;Rs 1.2Ω at If 100mA;Cap 500ff max at Vr50V,Lifetime 225ns
59▼	MD440C	7	#	A1tg	BV200V at Ir 10uA,Rs 1.2Ω at If 100mA;Cap 500ff max at Vr50V;Lifetime 225ns.
60▼	MD441A	7	#	F27ag	BV300V at Ir 10uA;Rs 3.5Ω at If 100mA;Cap 300ff max at Vr50V;Lifetime 80ns
61▼	MD441B	7	#	A1cy	BV300V at Ir 10uA;Rs 3.5Ω at If 100mA;Cap 300ff max at Vr50V,Lifetime 80ns.
62▼	MD441C	7	#	A1tg	BV300V at Ir 10uA;Rs 3.5Ω at If 100mA;Cap 300ff max at Vr50V;Lifetime 80ns.
63▼	MD442A	7	#	F27ag	BV300V at Ir 10uA;Rs 3.0Ω at If 100mA;Cap 400ff max at Vr50V,Lifetime 130ns
64▼	MD442B	7	#	A1cy	BV300V at Ir 10uA;Rs 3.0Ω at If 100mA;Cap 400ff max at Vr50V,Lifetime 130ns
65▼	MD442C	7	#	A1tg	BV300V at Ir 10uA;Rs 3.0Ω at If 100mA,Cap 400ff max at Vr50V;Lifetime 130ns
66▼	MD443A	7	§	F27ag	BV 500V at Ir 10uA,Rs 3.5Ω at If 100mA,Cap 300ff max at Vr 50V,Lifetime 120ns
67▼	MD443B	7	§	A1cy	BV 500V at Ir 10uA,Rs 3.5Ω at If 100mA;Cap 300ff max at Vr50V;Lifetime 120ns
68▼	MD443C	7	§	A1tg	BV 500V at Ir 10uA,Rs 3.5Ω at If 100mA;Cap 300ff max at Vr50V;Lifetime 120ns
69▼	MD444A	7	§	F27ag	BV 500V at Ir 10uA;Rs 2.8Ω at If 100mA;Cap 600ff max at Vr50V;Lifetime 240ns.
70▼	MD444B	7	§	A1cy	BV 500V at Ir 10uA,Rs 2.8Ω at If 100mA,Cap 600ff max at Vr50V;Lifetime 240ns
71▼	MD444C	7	§	A1tg	BV 500V at Ir 10uA,Rs 2.8Ω at If 100mA;Cap 600ff max at Vr50V;Lifetime 240ns.
72▼	MD445A	7	§	F27ag	BV 600V at Ir 10uA,Rs 3.7Ω at If 100mA;Cap 400ff max at Vr50V,Lifetime 140ns
73▼	MD445B	7	§	A1cy	BV 600V at Ir 10uA;Rs 3.7Ω at If 100mA;Cap 400ff max at Vr50V;Lifetime 140ns
74▼	MD445C	7	§	A1tg	BV 600V at Ir 10uA,Rs 3.7Ω at If 100mA;Cap 400ff max at Vr 50V,Lifetime 140ns
75▼	MD446A	7	§	F27ag	BV 600V at Ir 10uA;Rs 3.1Ω at If 100mA;Cap 600ff max at Vr50V;Lifetime 300ns
76▼	MD446B	7	§	A1cy	BV 600V at Ir 10uA;Rs 3.1Ω at If 100mA;Cap 600ff max at Vr50V;Lifetime 300ns.
77▼	MD446C	7	§	A1tg	BV 600V at Ir 10uA;Rs 3.1Ω at If 100mA,Cap 600ff max at Vr50V;Lifetime 300ns
78▼	MD447A	7	§	F27ag	BV 750V at Ir 10uA,Rs 3.8Ω at If 100mA;Cap 400ff max at Vr50V;Lifetime 200ns.
79▼	MD447B	7	§	A1cy	BV 750V at Ir 10uA,Rs 3.8Ω at If 100mA;Cap 400ff max at Vr50V;Lifetime 200ns
80▼	MD447C	7	§	A1tg	BV 750V at Ir 10uA,Rs 3.8Ω at If 100mA;Cap 400ff max at Vr50V;Lifetime 200ns
81▼	MD448A	7	§	F27ag	BV 750V at Ir 10uA;Rs 3.5Ω at If 100mA;Cap 600ff max at Vr50V;Lifetime 400ns.
82▼	MD448B	7	§	A1cy	BV 750V at Ir 10uA,Rs 2.5Ω at If 100mA,Cap 600ff max at Vr50V;Lifetime 400ns
83▼	MD448C	7	§	A1tg	BV 750V at Ir 10uA;Rs 2.5Ω at If 100mA;Cap 600ff max at Vr50V,Lifetime 400ns
84▼	MD449A	7	§	F27ag	BV 750V at Ir 10uA;Rs 1.0Ω at If 100mA;Cap 800ff max at Vr50V,Lifetime 440ns
85▼	MD449B	7	§	A1cy	BV 750V at Ir 10uA;Rs 1.0Ω at If 100mA;Cap 800ff max at Vr50V;Lifetime 440ns
86▼	MD449C	7	§	A1tg	BV 750V at Ir 10uA;Rs 1.0Ω at If 100mA;Cap 800ff max at Vr50V;Lifetime 440ns
87▼	MD450A	7	§	F27ag	BV 750V at Ir 10uA,Rs 800mΩ at If 100mA;Cap 1.0pf max at Vr50V,Lifetime 470ns
88▼	MD450B	7	§	A1cy	BV 750V at Ir10uA;Rs 800mΩ at If 100mA;Cap 1.0pf max at Vr50V;Lifetime 470ns.
89▼	MD450C	7	§	A1tg	BV 750V at Ir 10uA;Rs 800mΩ at If 100mA;Cap 1.0pf max at Vr50V,Lifetime 470ns.
90▼	MD451A	7	§	F27ag	BV 1.0kV at Ir 10uA,Rs 2.7Ω at If 100mA;Cap 600ff max at Vr50V;Lifetime 450ns
91▼	MD451B	7	§	Apcy	BV 1.0kV at Ir 10uA,Rs 2.7Ω at If 100mA,Cap 600ff max at Vr50V;Lifetime 450ns
92▼	MD451C	7	§	A1tg	BV 1.0kV at Ir 10uA;Rs 2.7Ω at If 100mA;Cap 600ff max at Vr50V;Lifetime 450ns
93▼	MD452A	7	§	F27ag	BV 1.0kV at Ir 10uA,Rs 1.0Ω at If 100mA;Cap 1.0pf max at Vr50V;Lifetime 480ns.
94▼	MD452B	7	§	A1cy	BV 1.0kV at Ir 10uA;Rs 1.0Ω at If 100mA,Cap 1.0pf max at Vr50V;Lifetime 480ns
95▼	MD452C	7	§	A1tg	BV 1.0kV at Ir 10uA;Rs 1.0Ω at If 100mA;Cap 1.0pf max at Vr50V;Lifetime 480ns
96	MS6030-1	7	Si	F10q	Pin,V-200V;Ct at 50V-.50pf;Rs-1.5ohms;Pdiss-5.0W max
97	MS6030-8	7	Si	F27d	Pin;V-200V;Ct at 50V-.50pf;Rs-1.5ohms,Pdiss-5.0W max
98	MS6031-1	7	Si	F10q	Pin;V-400V;Ct at 50V-.50pf;Rs-1.5ohms;Pdiss-5.0W max
99	MS6031-8	7	Si	F27d	Pin,V-400V,Ct at 50V-.50pf;Rs-1.5ohms;Pdiss-5.0W max
100	MS6032-1	7	Si	F10q	Pin;V-600V;Ct at 50V-.50pf;Rs-1.5ohms;Pdiss-3.0W max
101	MS6032-8	7	Si	F27d	Pin,V-600V,Ct at 50V-.50pf;Rs-1.5ohms,Pdiss-3.0W max
102	MS6033-1	7	Si	F10q	Pin;V-1000V;Ct at 50V-.50pf;Rs-1.5ohms,Pdiss-3.0W max
103	MS6033-8	7	Si	F27d	Pin;V-1000V,Ct at 50V-.50pf;Rs-1.5ohms;Pdiss-3.0W max
104	MS6034-1	7	Si	F10q	Pin,V-1000V,Ct at 50V-.50pf;Rs-1.0 ohms,Pdiss-3.0W max
105	MS6034-8	7	Si	F27d	Pin;V-100V,Ct at 50V-.50pf;Rs-1.0 ohms,Pdiss-3.0W max.
106	MS6035-1	7	Si	F10q	Pin,V-1400V,Ct at 50V-.50pf;Rs-2.0 ohms,Pdiss-2.5W max.
107	MS6035-8	7	Si	F27d	Pin,V-1400V;Ct at 50V-.50pf;Rs-2.0 ohms;Pdiss-2.5W max
108	MS6040-1	7	Si	F10q	Pin,V-200V;Ct at 50V-.90pf,Rs-1.0 ohms;Pdiss-6.0W max
109	MS6040-8	7	Si	F27d	Pin,V-200V,Ct at 50V-.90pf;Rs-1.0 ohms,Pdiss-6.0W max
110	MS6041-1	7	Si	F10q	Pin,V-400V,Ct at 50V-.90pf;Rs-1.0 ohms,Pdiss-6.0W max

SYMBOLS AND CODES EXPLAINED IN INTERPRETER

12. MISCELLANEOUS DIODES

IN ORDER OF (1) USE and (2) TYPE No.

LINE No	2 TYPE No.	1 USE	DESCRIPTION MAT.	DWG. No	TECHNICAL DATA
1	MS6041-8	7	Si	F27d	Pin,V-400V;Ct at 50V-.90pf;Rs-1.0 ohms;Pdiss-6.0W max
2	MS6042-1	7	Si	F10q	Pin,V-600V;Ct at 50V-.90pf;Rs-1.0 ohms;Pdiss-3.5W max.
3	MS6042-8	7	Si	F27d	Pin,V-600V;Ct at 50V-.90pf;Rs-1.0 ohms;Pdiss-3.5W max.
4	MS6043-1	7	Si	F10q	Pin,V-1000V;Ct at 50V-.90pf,Rs-1.2ohms;Pdiss-3.5W max.
5	MS6043-8	7	Si	F27d	Pin,V-1000V;Ct at 50V-.90pf;Rs-1.2ohms;Pdiss-3.5W max
6	MS6044-1	7	Si	F10q	Pin,V-1000V;Ct at 50V-.90pf;Rs-1.0 ohms;Pdiss-3.5W max.
7	MS6044-8	7	Si	F27d	Pin,V-1000V;Ct at 50V-.90pf;Rs-1.0 ohms;Pdiss-3.5W max
8	MS6045-1	7	Si	F10q	Pin;V-1400V;Ct at 50V-.90pf;Rs-1.7ohms;Pdiss-2.8W max.
9	MS6045-8	7	Si	F27d	Pin,V-1400V;Ct at 50V-.90pf;Rs-1.7ohms;Pdiss-2.8W max
10	MSC910	7	Si	A2s	BV-900V,Ins Loss-.09db;Iso-32db;Ct-.80pf max;VF-1000mV max
11	MSC911	7	Si	A2s	BV-900V,Ins Loss-.09db,Iso-32db;Ct-.75pf max;VF-1000mV max.
12	MSC912	7	Si	A2s	BV-900V,Ins.Loss-.09db;Iso-32db;Ct-.70pf max;VF-1000mV max.
13	MSC913	7	Si	A2s	BV-900V,Ins.Loss-.09db;Iso-32db;Ct-.65pf max,VF-1000mV max
14	MSC914	7	Si	A2s	BV-900V,Ins.Loss-.09db;Iso-32db;Ct-.60pf max;VF-1000mV max
15	MSC915	7	Si	A2s	BV-900V;Ins.Loss-.09db;Iso-32db;Ct-.55pf max;VF-1000mV max.
16	MSC916	7	Si	A2s	BV-900V;Ins.Loss-.09db;Iso-32db;Ct-.50pf max,VF-1000mV max
17	MSC917	7	Si	A2s	BV-900V;Ins.Loss-.09db,Iso-32db,Ct-.45pf max;VF-1000mV max
18	MSC918	7	Si	A2s	BV-900V;Ins.Loss-.09db,Iso-32db;Ct-.40pf max;VF-1000mV max
19	MSC919	7	Si	A2s	BV-900V;Ins Loss-.09db;Iso-32db;Ct-.35pf max;VF-1000mV max
20	MSC920	7	Si	A2s	BV-900V;Ins.Loss-.09db;Iso-32db;Ct-.80pf max;VF-950mV max
21	MSC921	7	Si	A2s	BV-900V;Ins.Loss-.09db;Iso-32db;Ct-.75pf max,VF-950mV max.
22	MSC922	7	Si	A2s	BV-900V,Ins Loss-.09db,Iso-32db;Ct-.70pf max;VF-950mV max
23	MSC923	7	Si	A2s	BV-900V,Ins Loss-.09db;Iso-32db;Ct-.65pf max;VF-950mV max.
24	MSC924	7	Si	A2s	BV-900V;Ins.Loss-.09db;Iso-32db;Ct-.60pf max;VF-950mV max
25	MSC925	7	Si	A2s	BV-900V;Ins.Loss-.09db,Iso-32db;Ct-.55pf max;VF-950mV max
26	MSC926	7	Si	A2s	BV-900V,Ins.Loss-.09db;Iso-32db;Ct-.50pf max;VF-950mV max
27	MSC927	7	Si	A2s	BV-900V;Ins.Loss-.09db;Iso-32db;Ct-.45pf max;VF-950mV max
28	MSC928	7	Si	A2s	BV-900V;Ins.Loss-.09db,Iso-32db;Ct-.40pf max;VF-950mV max
29	MSC929	7	Si	A2s	BV-900V;Ins.Loss-.09db;Iso-32db;Ct-.35pf max;VF-950mV max
30	MSC930	7	Si	A2s	BV-900V;Ins.Loss-.09db;Iso-32db;Ct-.80pf max;VF-900mV max
31	MSC931	7	Si	A2s	BV-900V;Ins.Loss-.09db;Iso-32db;Ct-.75pf max;VF-900mV max
32	MSC932	7	Si	A2s	BV-900V;Ins.Loss-.09db;Iso-32db;Ct-.70pf max;VF-900mV max
33	MSC933	7	Si	A2s	BV-900V,Ins.Loss-.09db;Iso-32db;Ct-.65pf max;VF-900mV max
34	MSC934	7	Si	A2s	BV-900V;Ins.Loss-.09db;Iso-32db;Ct-.60pf max;VF-900mV max
35	MSC935	7	Si	A2s	BV-900V,Ins.Loss-.09db;Iso-32db,Ct-.55pf max;VF-900mV max
36	MSC936	7	Si	A2s	BV-900V;Ins.Loss-.09db;Iso-32db;Ct-.50pf max,VF-900mV max.
37	MSC937	7	Si	A2s	BV-900V;Ins.Loss-.09db;Iso-32db;Ct-.45pf max,VF-900mV max
38	MSC938	7	Si	A2s	BV-900V;Ins.Loss-.09db;Iso-32db;Ct-.40pf max;VF-900mV max
39	MSC939	7	Si	A2s	BV-900V;Ins.Loss-.09db,Iso-32db;Ct-.35pf max;VF-900mV max.
40	MSC940	7	Si	A2s	BV-900V,Ins Loss-.09db;Iso-32db;Ct-.80pf max;VF-850mV max
41	MSC941	7	Si	A2s	BV-900V;Ins.Loss-.09db;Iso-32db;Ct-.75pf max;VF-850mV max
42	MSC942	7	Si	A2s	BV-900V;Ins Loss-.09db;Iso-32db;Ct-.70pf max;VF-850mV max.
43	MSC943	7	Si	A2s	BV-900V;Ins.Loss-.09db;Iso-32db;Ct-.65pf max;VF-850mV max
44	MSC944	7	Si	A2s	BV-900V;Ins Loss-.09db;Iso-32db;Ct-.60pf max;VF-850mV max
45	MSC945	7	Si	A2s	BV-900V;Ins.Loss-.09db,Iso-32db;Ct-.55pf max,VF-850mV max.
46	MSC946	7	Si	A2s	BV-900V;Ins Loss-.09db;Iso-32db;Ct-.50pf max;VF-850mV max
47	MSC947	7	Si	A2s	BV-900V;Ins.Loss-.09db,Iso-32db;Ct-.45pf max;VF-850mV max
48	MSC948	7	Si	A2s	BV-900V;Ins.Loss-.09db;Iso-32db;Ct-.40pf max;VF-850mV max
49	MSC949	7	Si	A2s	BV-900V;Ins.Loss-.09db;Iso-32db;Ct-.35pf max,VF-850mV max
50	MSC1010	7	Si	A2s	BV-1000V;Ins Loss-.09db;Iso-32db;Ct-.80pf max,VF-1000mV max
51	MSC1011	7	Si	A2s	BV-1000V;Ins Loss-.09db,Iso-32db;Ct-.75pf max,VF-1000mV max
52	MSC1012	7	Si	A2s	BV-1000V;Ins Loss-.09db,Iso-32db,Ct-.70pf max;VF-1000mV max
53	MSC1013	7	Si	A2s	BV-1000V;Ins Loss-.09db,Iso-32db;Ct-.65pf max;VF-1000mV max
54	MSC1014	7	Si	A2s	BV-1000V,Ins Loss-.09db;Iso-32db,Ct-.60pf max;VF-1000mV max
55	MSC1015	7	Si	A2s	BV-1000V,Ins Loss-.09db;Iso-32db;Ct-.55pf max;VF-1000mV max
56	MSC1016	7	Si	A2s	BV-1000V;Ins.Loss-.09db;Iso-32db;Ct-.50pf max;VF-1000mV max
57	MSC1017	7	Si	A2s	BV-1000V,Ins Loss-.09db;Iso-32db;Ct-.45pf max;VF-1000mV max.
58	MSC1018	7	Si	A2s	BV-1000V,Ins Loss-.09db;Iso-32db;Ct-.40pf max;VF-1000mV max
59	MSC1019	7	Si	A2s	BV-1000V;Ins.Loss-.09db;Iso-32db;Ct-.35pf max;VF-1000mV max
60	MSC1020	7	Si	A2s	BV-1000V;Ins Loss-.09db;Iso-32db;Ct-.80pf max;VF-950mV max
61	MSC1021	7	Si	A2s	BV-1000V;Ins.Loss-.09db;Iso-32db;Ct-.75pf max;VF-950mV max
62	MSC1022	7	Si	A2s	BV-1000V;Ins Loss-.09db;Iso-32db;Ct-.70pf max;VF-950mV max.
63	MSC1023	7	Si	A2s	BV-1000V;Ins.Loss-.09db;Iso-32db;Ct-.65pf max;VF-950mV max.
64	MSC1024	7	Si	A2s	BV-1000V;Ins.Loss-.09db;Iso-32db;Ct-.60pf max;VF-950mV max
65	MSC1025	7	Si	A2s	BV-1000V;Ins Loss-.09db;Iso-32db;Ct-.55pf max;VF-950mV max.
66	MSC1026	7	Si	A2s	BV-1000V;Ins Loss-.09db;Iso-32db;Ct-.50pf max;VF-950mV max.
67	MSC1027	7	Si	A2s	BV-1000V,Ins Loss-.09db;Iso-32db;Ct-.45pf max;VF-950mV max
68	MSC1028	7	Si	A2s	BV-1000V,Ins Loss-.09db,Iso-32db;Ct-.40pf max;VF-950mV max
69	MSC1029	7	Si	A2s	BV-1000V;Ins Loss-.09db;Iso-32db;Ct-.35pf max;VF-950mV max.
70	MSC1030	7	Si	A2s	BV-1000V,Ins Loss-.09db;Iso-32db;Ct-.80pf max;VF-900mV max.
71	MSC1031	7	Si	A2s	BV-1000V,Ins Loss-.09db;Iso-32db;Ct-.75pf max;VF-900mV max.
72	MSC1032	7	Si	A2s	BV-1000V,Ins Loss-.09db;Iso-32db;Ct-.70pf max;VF-900mV max
73	MSC1033	7	Si	A2s	BV-1000V;Ins Loss-.09db;Iso-32db;Ct-.65pf max;VF-900mV max.
74	MSC1034	7	Si	A2s	BV-1000V;Ins.Loss-.09db;Iso-32db,Ct-.60pf max;VF-900mV max.
75	MSC1035	7	Si	A2s	BV-1000V;Ins Loss-.09db;Iso-32db;Ct-.55pf max;VF-900mV max.
76	MSC1036	7	Si	A2s	BV-1000V,Ins Loss-.09db;Iso-32db;Ct-.50pf max;VF-900mV max.
77	MSC1037	7	Si	A2s	BV-1000V;Ins.Loss-.09db;Iso-32db;Ct-.45pf max;VF-900mV max.
78	MSC1038	7	Si	A2s	BV-1000V;Ins Loss-.09db;Iso-32db;Ct-.40pf max;VF-900mV max.
79	MSC1039	7	Si	A2s	BV-1000V,Ins.Loss-.09db;Iso-32db;Ct-.35pf max;VF-900mV max.
80	MSC1040	7	Si	A2s	BV-1000V;Ins.Loss-.09db;Iso-32db;Ct-.80pf max;VF-850mV max.
81	MSC1041	7	Si	A2s	BV-1000V;Ins.Loss-.09db;Iso-32db;Ct-.75pf max;VF-850mV max.
82	MSC1042	7	Si	A2s	BV-1000V;Ins.Loss-.09db;Iso-32db;Ct-.70pf max;VF-850mV max.
83	MSC1043	7	Si	A2s	BV-1000V;Ins.Loss-.09db;Iso-32db;Ct-.65pf max;VF-850mV max.
84	MSC1044	7	Si	A2s	BV-1000V;Ins.Loss-.09db;Iso-32db;Ct-.60pf max;VF-850mV max.
85	MSC1045	7	Si	A2s	BV-1000V;Ins.Loss-.09db;Iso-32db;Ct-.55pf max;VF-850mV max.
86	MSC1046	7	Si	A2s	BV-1000V;Ins.Loss-.09db;Iso-32db;Ct-.50pf max;VF-850mV max.
87	MSC1047	7	Si	A2s	BV-1000V;Ins Loss-.09db;Iso-32db;Ct-.45pf max;VF-850mV max.
88	MSC1048	7	Si	A2s	BV-1000V;Ins.Loss-.09db;Iso-32db;Ct-.40pf max;VF-850mV max.
89	MSC1049	7	Si	A2s	BV-1000V;Ins.Loss-.09db;Iso-32db;Ct-.35pf max;VF-850mV max.
90	MSC1110	7	Si	A2s	BV-1100V;Ins.Loss-.09db;Iso-32db;Ct-.80pf max;VF-1000mV max
91	MSC1111	7	Si	A2s	BV-1100V;Ins Loss-.09db;Iso-32db;Ct-.75pf max;VF-1000mV max
92	MSC1112	7	Si	A2s	BV-1100V;Ins Loss-.09db;Iso-32db;Ct-.70pf max;VF-1000mV max.
93	MSC1113	7	Si	A2s	BV-1100V;Ins.Loss-.09db;Iso-32db;Ct-.65pf max;VF-1000mV max.
94	MSC1114	7	Si	A2s	BV-1100V;Ins Loss-.09db;Iso-32db;Ct-.60pf max;VF-1000mV max
95	MSC1115	7	Si	A2s	BV-1100V;Ins.Loss-.09db;Iso-32db;Ct-.55pf max;VF-1000mV max.
96	MSC1116	7	Si	A2s	BV-1100V;Ins.Loss-.09db;Iso-32db;Ct-.50pf max;VF-1000mV max.
97	MSC1117	7	Si	A2s	BV-1100V;Ins.Loss-.09db;Iso-32db;Ct-.45pf max,VF-1000mV max
98	MSC1118	7	Si	A2s	BV-1100V;Ins Loss-.09db;Iso-32db;Ct-.40pf max;VF-1000mV max
99	MSC1119	7	Si	A2s	BV-1100V;Ins.Loss-.09db;Iso-32db;Ct-.35pf max;VF-1000mV max.
100	MSC1120	7	Si	A2s	BV-1100V;Ins.Loss-.09db;Iso-32db;Ct-.80pf max;VF-950mV max.
101	MSC1121	7	Si	A2s	BV-1100V;Ins.Loss-.09db;Iso-32db;Ct-.75pf max;VF-950mV max
102	MSC1122	7	Si	A2s	BV-1100V;Ins.Loss-.09db;Iso-32db;Ct-.70pf max;VF-950mV max
103	MSC1123	7	Si	A2s	BV-1100V;Ins.Loss 09db;Iso-32db;Ct-.65pf max;VF-950mV max
104	MSC1124	7	Si	A2s	BV-1100V;Ins.Loss-.09db;Iso-32db;Ct-.60pf max,VF-950mV max
105	MSC1125	7	Si	A2s	BV-1100V;Ins.Loss-.09db;Iso-32db;Ct-.55pf max;VF-950mV max.
106	MSC1126	7	Si	A2s	BV-1100V;Ins.Loss-.09db;Iso-32db;Ct-.50pf max;VF-950mV max.
107	MSC1127	7	Si	A2s	BV-1100V;Ins.Loss-.09db,Iso-32db;Ct-.45pf max;VF-950mV max
108	MSC1128	7	Si	A2s	BV-1100V;Ins.Loss-.09db;Iso-32db;Ct-.40pf max;VF-950mV max.
109	MSC1129	7	Si	A2s	BV-1100V;Ins.Loss-.09db;Iso-32db,Ct-.35pf max;VF-950mV max.
110	MSC1130	7	Si	A2s	BV-1100V;Ins.Loss-.09db,Iso-32db;Ct-.80pf max;VF-900mV max.

12. MISCELLANEOUS DIODES

IN ORDER OF (1) USE and (2) TYPE No.

LINE No.	2 TYPE No.	1 USE	DESCRIPTION MAT.	DWG. No.	TECHNICAL DATA
1	MSC1131	7	Si	A2s	BV-1100V;Ins.Loss-.09db;Iso-32db;Ct-.75pf max;VF-900mV max.
2	MSC1132	7	Si	A2s	BV-1100V;Ins Loss-.09db;Iso-32db;Ct-.70pf max;VF-900mV max.
3	MSC1133	7	Si	A2s	BV-1100V;Ins Loss-.09db;Iso-32db;Ct-.65pf max;VF-900mV max.
4	MSC1134	7	Si	A2s	BV-1100V;Ins.Loss-.09db;Iso-32db;Ct-.60pf max;VF-900mV max
5	MSC1135	7	Si	A2s	BV-1100V,Ins.Loss-.09db;Iso-32db;Ct-.55pf max;VF-900mV max.
6	MSC1136	7	Si	A2s	BV-1100V;Ins.Loss-.09db;Iso-32db;Ct-.50pf max;VF-900mV max.
7	MSC1137	7	Si	A2s	BV-1100V;Ins.Loss-.09db;Iso-32db;Ct-.45pf max;VF-900mV max.
8	MSC1138	7	Si	A2s	BV-1100V;Ins Loss-.09db;Iso-32db;Ct-.40pf max;VF-900mV max.
9	MSC1139	7	Si	A2s	BV-1100V;Ins.Loss-.09db;Iso-32db;Ct-.35pf max;VF-900mV max.
10	MSC1140	7	Si	A2s	BV-1100V;Ins.Loss-.09db;Iso-32db;Ct-.80pf max;VF-850mV max.
11	MSC1141	7	Si	A2s	BV-1100V;Ins.Loss-.09db;Iso-32db;Ct-.75pf max;VF-850mV max
12	MSC1142	7	Si	A2s	BV-1100V;Ins.Loss-.09db;Iso-32db;Ct-.70pf max;VF-850mV max.
13	MSC1143	7	Si	A2s	BV-1100V;Ins.Loss-.09db;Iso-32db;Ct-.65pf max;VF-850mV max
14	MSC1144	7	Si	A2s	BV-1100V;Ins.Loss-.09db,Iso-32db;Ct-.60pf max;VF-850mV max.
15	MSC1145	7	Si	A2s	BV-1100V;Ins.Loss-.09db;Iso-32db;Ct-.55pf max;VF-850mV max.
16	MSC1146	7	Si	A2s	BV-1100V;Ins.Loss-.09db;Iso-32db;Ct-.50pf max;VF-850mV max
17	MSC1147	7	Si	A2s	BV-1100V;Ins.Loss-.09db;Iso-32db;Ct- 45pf max;VF-850mV max
18	MSC1148	7	Si	A2s	BV-1100V;Ins.Loss-.09db,Iso-32db;Ct-.40pf max,VF-850mV max
19	MSC1149	7	Si	A2s	BV-1100V;Ins.Loss-.09db,Iso-32db;Ct-.35pf max;VF-850mV max.
20	MSC1210	7	Si	A2s	BV-1200V;Ins Loss-.09db;Iso-32db;Ct-.80pf max;VF-1000mV max
21	MSC1211	7	Si	A2s	BV-1200V;Ins.Loss-.09db;Iso-32db;Ct-.75pf max;VF-1000mV max.
22	MSC1212	7	Si	A2s	BV-1200V;Ins.Loss-.09db;Iso-32db,Ct-.70pf max;VF-1000mV max.
23	MSC1213	7	Si	A2s	BV-1200V;Ins Loss-.09db,Iso-32db;Ct-.65pf max;VF-1000mV max
24	MSC1214	7	Si	A2s	BV-1200V;Ins.Loss-.09db;Iso-32db;Ct-.60pf max;VF-1000mV max.
25	MSC1215	7	Si	A2s	BV-1200V,Ins.Loss-.09db;Iso-32db,Ct-.55pf max;VF-1000mV max.
26	MSC1216	7	Si	A2s	BV-1200V,Ins.Loss-.09db,Iso-32db;Ct-.50pf max;VF-1000mV max
27	MSC1217	7	Si	A2s	BV-1200V;Ins.Loss-.09db;Iso-32db;Ct-.45pf max;VF-1000mV max
28	MSC1218	7	Si	A2s	BV-1200V;Ins.Loss-.09db;Iso-32db;Ct-.40pf max;VF-1000mV max.
29	MSC1219	7	Si	A2s	BV-1200V,Ins.Loss-.09db,Iso-32db,Ct- 35pf max;VF-1000mV max
30	MSC1220	7	Si	A2s	BV-1200V;Ins Loss-.09db,Iso-32db;Ct-.80pf max;VF-950mV max
31	MSC1221	7	Si	A2s	BV-1200V;Ins.Loss-.09db,Iso-32db,Ct-.75pf max;VF-950mV max.
32	MSC1222	7	Si	A2s	BV-1200V;Ins.Loss-.09db;Iso-32db;Ct- 70pf max,VF-950mV max
33	MSC1223	7	Si	A2s	BV-1200V;Ins.Loss-.09db;Iso-32db;Ct- 65pf max,VF-950mV max.
34	MSC1224	7	Si	A2s	BV-1200V;Ins.Loss-.09db,Iso-32db;Ct-.60pf max;VF-950mV max.
35	MSC1225	7	Si	A2s	BV-1200V;Ins Loss-.09db;Iso-32db;Ct- 55pf max;VF-950mV max.
36	MSC1226	7	Si	A2s	BV-1200V,Ins.Loss-.09db;Iso-32db;Ct- 50pf max;VF-950mV max.
37	MSC1227	7	Si	A2s	BV-1200V;Ins.Loss-.09db;Iso-32db;Ct-.45pf max;VF-950mV max.
38	MSC1228	7	Si	A2s	BV-1200V,Ins.Loss-.09db;Iso-32db;Ct- 40pf max;VF-950mV max
39	MSC1229	7	Si	A2s	BV-1200V;Ins Loss-.09db;Iso-32db;Ct-.35pf max;VF-950mV max.
40	MSC1230	7	Si	A2s	BV-1200V,Ins Loss-.09db;Iso-32db;Ct- 80pf max;VF-900mV max
41	MSC1231	7	Si	A2s	BV-1200V;Ins.Loss-.09db,Iso-32db;Ct- 75pf max;VF-900mV max.
42	MSC1232	7	Si	A2s	BV-1200V;Ins Loss-.09db;Iso-32db;Ct- 70pf max,VF-900mV max
43	MSC1233	7	Si	A2s	BV-1200V;Ins.Loss-.09db;Iso-32db;Ct- 65pf max;VF-900mV max.
44	MSC1234	7	Si	A2s	BV-1200V;Ins.Loss-.09db;Iso-32db;Ct-.60pf max;VF-900mV max.
45	MSC1235	7	Si	A2s	BV-1200V;Ins.Loss-.09db,Iso-32db;Ct- 55pf max;VF-900mV max.
46	MSC1236	7	Si	A2s	BV-1200V;Ins Loss-.09db;Iso-32db;Ct-.50pf max;VF-900mV max.
47	MSC1237	7	Si	A2s	BV-1200V,Ins.Loss-.09db;Iso-32db;Ct-.45pf max;VF-900mV max.
48	MSC1238	7	Si	A2s	BV-1200V;Ins Loss-.09db;Iso-32db;Ct- 40pf max;VF-900mV max.
49	MSC1239	7	Si	A2s	BV-1200V;Ins Loss-.09db;Iso-32db;Ct-.35pf max;VF-900mV max.
50	MSC1240	7	Si	A2s	BV-1200V;Ins Loss-.09db;Iso-32db;Ct-.80pf max;VF-850mV max.
51	MSC1241	7	Si	A2s	BV-1200V,Ins Loss-.09db;Iso-32db;Ct-.75pf max,VF-850mV max.
52	MSC1242	7	Si	A2s	BV-1200V;Ins Loss-.09db;Iso-32db;Ct- 70pf max;VF-850mV max
53	MSC1243	7	Si	A2s	BV-1200V;Ins Loss-.09db,Iso-32db;Ct-.65pf max;VF-850mV max
54	MSC1244	7	Si	A2s	BV-1200V;Ins.Loss-.09db,Iso-32db;Ct-.60pf max,VF-850mV max
55	MSC1245	7	Si	A2s	BV-1200V;Ins.Loss-.09db;Iso-32db;Ct- 55pf max;VF-850mV max.
56	MSC1246	7	Si	A2s	BV-1200V;Ins.Loss-.09db,Iso-32db;Ct- 50pf max,VF-850mV max
57	MSC1247	7	Si	A2s	BV-1200V;Ins Loss-.09db;Iso-32db,Ct- 45pf max;VF-850mV max
58	MSC1248	7	Si	A2s	BV-1200V,Ins Loss-.09db,Iso-32db;Ct-.40pf max;VF-850mV max.
59	MSC1249	7	Si	A2s	BV-1200V;Ins Loss-.09db;Iso-32db;Ct-.35pf max;VF-850mV max
60	PS0120	7	Si	F27d	Pin,VB-200V;Ct at 50V-.40pf max;Rs-1.5 ohms max;Pdiss-1.0W.
61	PS0120A	7	Si	F27d	Pin;VB-200V,Ct at 50V-.60pf max;Rs-1.2 ohms max;Pdiss-1.5W.
62	PS0120B	7	Si	F27d	Pin,VB-200V;Ct at 50V-.80pf max,Rs-1.0 ohms max;Pdiss-2.0W.
63	PS0120C	7	Si	F27d	Pin;VB-200V;Ct at 50V-1.1pf max;Rs-.80 ohms max;Pdiss-2.5W.
64	PS0120D	7	Si	F27d	Pin,VB-200V;Ct at 50V-1.7pf max,Rs-.80 ohms max;Pdiss-5.0W.
65	PS0130	7	Si	F27d	Pin;VB-300V,Ct at 50V-.40pf max;Rs-1.5 ohms max,Pdiss-1.0W.
66	PS0130A	7	Si	F27d	Pin,VB-300V;Ct at 50V-.60pf max,Rs-1.2 ohms max;Pdiss-1.5W.
67	PS0130B	7	Si	F27d	Pin,VB-300V;Ct at 50V-.80pf max;Rs-1.0 ohms max;Pdiss-2.0W.
68	PS0130C	7	Si	F27d	Pin,VB-300V;Ct at 50V-1.1pf max,Rs-.80 ohms max;Pdiss-2.5W.
69	PS0130D	7	Si	F27d	Pin,VB-300V;Ct at 50V-1.7pf max;Rs-.80 ohms max;Pdiss-5.0W.
70	PS0140	7	Si	F27d	Pin,VB-400V,Ct at 50V-.40pf max;Rs-1.5 ohms max,Pdiss-1.0W.
71	PS0140A	7	Si	F27d	Pin,VB-400V,Ct at 50V-.60pf max;Rs-1.2 ohms max;Pdiss-1.5W
72	PS0140B	7	Si	F27d	Pin,VB-400V;Ct at 50V-.80pf max;Rs-1.0 ohms max;Pdiss-2.0W
73	PS0140C	7	Si	F27d	Pin,VB-400V,Ct at 50V-1.1pf max,Rs-.80 ohms max,Pdiss-2.5W
74	PS0140D	7	Si	F27d	Pin,VB-400V;Ct at 50V-1.7pf max;Rs-.80 ohms max,Pdiss-5.0W.
75	PS0150	7	Si	F27d	Pin,VB-500V,Ct at 50V-.40pf max,Rs-1.5 ohms max;Pdiss-1.0W
76	PS0150A	7	Si	F27d	Pin;VB-500V;Ct at 50V-.60pf max;Rs-1.2 ohms max,Pdiss-1.5W
77	PS0150B	7	Si	F27d	Pin,VB-500V,Ct at 50V-.80pf max,Rs-1.0 ohms max;Pdiss-2.0W
78	PS0150C	7	Si	F27d	Pin;VB-500V,Ct at 50V-1.1pf max;Rs-.80 ohms max;Pdiss-2.5W.
79	PS0150D	7	Si	F27d	Pin,VB-500V,Ct at 50V-1.7pf max;Rs-.80 ohms max;Pdiss-5.0W
80	PS0190	7	Si	F27d	Pin,VB-1000V,Ct at 50V-.50pf max,Rs-2.0 ohms max,Pdiss-1.0W
81	PS0190A	7	Si	F27d	Pin,VB-1000V;Ct at 50V-1.0pf max;Rs-1.5 ohms max;Pdiss-1.5W.
82	PS0503AX	7	Si	F10p	Pin; VB-30V, Cj at 0.0V-.20pf max; Rs-2.0 ohms max; Pdiss-.30W
83	PS0503AY	7	Si	F10p	Pin; VB-30V, Cj at 0.0V-.20pf max, Rs-2.5 ohms max; Pdiss-.30W
84	PS0503AZ	7	Si	F10p	Pin, VB-30V; Cj at 0.0V-.20pf max; Rs-3.0 ohms max, Pdiss-.30W.
85	PS0503BX	7	Si	F10p	Pin, VB-30V, Cj at 0.0V-.25pf max; Rs-2.0 ohms max, Pdiss-.40W.
86	PS0503BY	7	Si	F10p	Pin, VB-30V; Cj at 0.0V-.25pf max; Rs-2.5 ohms max, Pdiss-.40W
87	PS0503BZ	7	Si	F10p	Pin, VB-30V, Cj at 0.0V-.25pf max, Rs-3.0 ohms max; Pdiss-.40W
88	PS0503CX	7	Si	F10p	Pin, VB-30V, Cj at 0.0V-.30pf max, Rs-2.0 ohms max; Pdiss-.50W.
89	PS0503CY	7	Si	F10p	Pin, VB-30V; Cj at 0.0V-.30pf max; Rs-2.5 ohms max, Pdiss-.50W
90	PS0503CZ	7	Si	F10p	Pin, VB-30V, Cj at 0.0V-.30pf max; Rs-3.0 ohms max; Pdiss-.50W.
91	PS0503DX	7	Si	F10p	Pin, VB-30V, Cj at 0.0V-.40pf max; Rs 2.0 ohms max; Pdiss-.75W.
92	PS0503DY	7	Si	F10p	Pin, VB-30V; Cj at 0.0V-.40pf max, Rs-2.5 ohms max, Pdiss-.75W
93	PS0503DZ	7	Si	F10p	Pin, VB-30V, Cj at 0.0V-.40pf max, Rs-3.0 ohms max; Pdiss-.75W.
94	PS0503EX	7	Si	F10p	Pin, VB-30V, Cj at 0.0V-.50pf max, Rs-2.0 ohms max; Pdiss-1.0W
95	PS0503EY	7	Si	F10p	Pin, VB-30V; Cj at 0.0V-.50pf max; Rs-2.5 ohms max; Pdiss-1.0W
96	PS0503EZ	7	Si	F10p	Pin; VB-30V, Cj at 0.0V-.50pf max; Rs-3.0 ohms max; Pdiss-1.0W.
97	PS0503X	7	Si	F10p	Pin, VB-30V, Cj at 0.0V-.15pf max, Rs-2.0 ohms max; Pdiss-.20W.
98	PS0503Y	7	Si	F10p	Pin, VB-30V; Cj at 0.0V-.15pf max; Rs-2.5 ohms max; Pdiss-.20W.
99	PS0503Z	7	Si	F10p	Pin; VB-30V; Cj at 0.0V-.15pf max; Rs-3.0 ohms max; Pdiss-.20W.
100	PS0505AX	7	Si	F10p	Pin, VB-50V; Cj at 0.0V-.20pf max; Rs-2.0 ohms max; Pdiss-.30W.
101	PS0505AY	7	Si	F10p	Pin, VB-50V, Cj at 0.0V-.20pf max; Rs-2.5 ohms max; Pdiss-.30W.
102	PS0505AZ	7	Si	F10p	Pin, VB-50V; Cj at 0.0V-.20pf max; Rs-3.0 ohms max, Pdiss-.30W.
103	PS0505BX	7	Si	F10p	Pin, VB-50V; Cj at 0.0V-.25pf max; Rs-2.0 ohms max; Pdiss-.40W.
104	PS0505BY	7	Si	F10p	Pin, VB-50V; Cj at 0.0V-.25pf max; Rs-2.5 ohms max; Pdiss-.40W.
105	PS0505BZ	7	Si	F10p	Pin, VB-50V; Cj at 0.0V-.25pf max, Rs-3.0 ohms max; Pdiss-.40W.
106	PS0505CX	7	Si	F10p	Pin, VB-50V, Cj at 0.0V-.30pf max, Rs-2.0 ohms max; Pdiss-.50W.
107	PS0505CY	7	Si	F10p	Pin, VB-50V, Cj at 0.0V-.30pf max; Rs-2.5 ohms max; Pdiss-.50W
108	PS0505CZ	7	Si	F10p	Pin, VB-50V; Cj at 0.0V-.30pf max, Rs-3.0 ohms max; Pdiss-.50W.
109	PS0505DX	7	Si	F10p	Pin, VB-50V, Cj at 0.0V-.40pf max; Rs-2.0 ohms max; Pdiss-.75W.
110	PS0505DY	7	Si	F10p	Pin, VB-50V, Cj at 0.0V-.40pf max; Rs-2.5 ohms max, Pdiss-.75W.

SYMBOLS AND CODES EXPLAINED IN INTERPRETER

12. MISCELLANEOUS DIODES

IN ORDER OF (1) USE and (2) TYPE No.

LINE No.	2 TYPE No	1 USE	DESCRIPTION MAT.	DWG. No.	TECHNICAL DATA
1	PS0505DZ	7	Si	F10p	Pin; VB-50V; Cj at 0 0V-.40pf max, Rs-3.0 ohms max, Pdiss-.75W
2	PS0505EX	7	Si	F10p	Pin, VB-50V, Cj at 0 0V-.50pf max; Rs-2.0 ohms max; Pdiss-1 0W
3	PS0505EY	7	Si	F10p	Pin, VB-50V; Cj at 0 0V-.50pf max, Rs-2.5 ohms max, Pdiss-1.0W
4	PS0505EZ	7	Si	F10p	Pin, VB-50V, Cj at 0 0V-.50pf max, Rs-3.0 ohms max, Pdiss-1 0W
5	PS0505X	7	Si	F10p	Pin, VB-50V, Cj at 0 0V- 15pf max, Rs-2 0 ohms max, Pdiss- 20W.
6	PS0505Y	7	Si	F10p	Pin, VB-50V; Cj at 0 0V-.15pf max; Rs-2.5 ohms max; Pdiss- 20W.
7	PS0505Z	7	Si	F10p	Pin, VB-50V, Cj at 0.0V-.15pf max; Rs-3 0 ohms max; Pdiss-.20W.
8	PS0510AX	7	Si	F10p	Pin, VB-100V, Cj at 0.0V- 20pf max; Rs-2 0 ohms max; Pdiss- 30W
9	PS0510AY	7	Si	F10p	Pin, VB-100V, Cj at 0.0V-.20pf max; Rs-2.5 ohms max; Pdiss- 30W
10	PS0510AZ	7	Si	F10p	Pin; VB-100V; Cj at 0 0V- 20pf max, Rs-3 0 ohms max; Pdiss-.30W
11	PS0510BX	7	Si	F10p	Pin, VB-100V; Cj at 0 0V- 25pf max; Rs-2 0 ohms max; Pdiss- 40W.
12	PS0510BY	7	Si	F10p	Pin; VB-100V; Cj at 0 0V- 25pf max; Rs-2.5 ohms max; Pdiss-.40W
13	PS0510BZ	7	Si	F10p	Pin, VB-100V; Cj at 0.0V-.25pf max; Rs-3.0 ohms max; Pdiss- 40W
14	PS0510CX	7	Si	F10p	Pin; VB-100V, Cj at 0.0V-.30pf max; Rs-2.0 ohms max, Pdiss-.50W
15	PS0510CY	7	Si	F10p	Pin, VB-100V, Cj at 0 0V-.30pf max; Rs-2 5 ohms max; Pdiss-.50W.
16	PS0510CZ	7	Si	F10p	Pin; VB-100V; Cj at 0.0V-.30pf max; Rs-3.0 ohms max, Pdiss-.50W
17	PS0510DX	7	Si	F10p	Pin, VB-100V, Cj at 0 0V-.40pf max; Rs-2.0 ohms max; Pdiss-.75W.
18	PS0510DY	7	Si	F10p	Pin, VB-100V, Cj at 0 0V-.40pf max; Rs-2 5 ohms max, Pdiss-.75W
19	PS0510DZ	7	Si	F10p	Pin; VB-100V; Cj at 0 0V-.40pf max; Rs-3 0 ohms max, Pdiss- 75W.
20	PS0510EX	7	Si	F10p	Pin; VB-100V; Cj at 0 0V-.50pf max; Rs-2 0 ohms max, Pdiss-1.0W.
21	PS0510EY	7	Si	F10p	Pin, VB-100V; Cj at 0.0V-.50pf max; Rs-2 5 ohms max; Pdiss-1.0W
22	PS0510EZ	7	Si	F10p	Pin; VB-100V, Cj at 0 0V-.50pf max; Rs-3 0 ohms max, Pdiss-1 0W
23	PS0510X	7	Si	F10p	Pin, VB-100V, Cj at 0.0V-.15pf max, Rs-2.0 ohms max, Pdiss- 20W
24	PS0510Y	7	Si	F10p	Pin, VB-100V, Cj at 0 0V-.15pf max, Rs-2 5 ohms max; Pdiss-.20W
25	PS0510Z	7	Si	F10p	Pin, VB-100V, Cj at 0.0V-.15pf max, Rs-3 0 ohms max; Pdiss- 20W
26	PS0515AX	7	Si	F10p	Pin, VB-150V; Cj at 0 0V-.20pf max; Rs-2.0 ohms max; Pdiss- 30W
27	PS0515AY	7	Si	F10p	Pin; VB-150V; Cj at 0.0V- 20pf max; Rs-2 5 ohms max; Pdiss- 30W
28	PS0515AZ	7	Si	F10p	Pin; VB-150V; Cj at 0 0V-.20pf max, Rs-3 0 ohms max; Pdiss- 30W
29	PS0515BX	7	Si	F10p	Pin, VB-150V, Cj at 0 0V-.25pf max; Rs-2 0 ohms max; Pdiss- 40W
30	PS0515BY	7	Si	F10p	Pin; VB-150V; Cj at 0 0V-.25pf max, Rs-2.5 ohms max; Pdiss-.40W
31	PS0515BZ	7	Si	F10p	Pin, VB-150V, Cj at 0 0V-.25pf max; Rs-3 0 ohms max, Pdiss- 40W
32	PS0515CX	7	Si	F10p	Pin, VB-150V, Cj at 0 0V-.30pf max; Rs-2 0 ohms max; Pdiss- 50W
33	PS0515CY	7	Si	F10p	Pin, VB-150V, Cj at 0.0V-.30pf max, Rs-2 5 ohms max; Pdiss- 50W
34	PS0515CZ	7	Si	F10p	Pin; VB-150V; Cj at 0 0V-.30pf max, Rs-3 0 ohms max; Pdiss- 50W
35	PS0515DX	7	Si	F10p	Pin, VB-150V, Cj at 0 0V-.40pf max, Rs-2 0 ohms max; Pdiss- 75W
36	PS0515DY	7	Si	F10p	Pin, VB-150V; Cj at 0 0V-.40pf max; Rs-2.5 ohms max; Pdiss- 75W
37	PS0515DZ	7	Si	F10p	Pin, VB-150V; Cj at 0 0V-.40pf max; Rs-3 0 ohms max; Pdiss- 75W
38	PS0515EX	7	Si	F10p	Pin; VB-150V; Cj at 0 0V-.50pf max, Rs-2.0 ohms max; Pdiss-1 0W
39	PS0515EY	7	Si	F10p	Pin, VB-150V, Cj at 0 0V- 50pf max, Rs-2 5 ohms max, Pdiss-1 0W
40	PS0515EZ	7	Si	F10p	Pin, VB-150V; Cj at 0 0V-.50pf max; Rs-3.0 ohms max, Pdiss-1 0W
41	PS0515X	7	Si	F10p	Pin; VB-150V; Cj at 0 0V-.15pf max, Rs-2 0 ohms max, Pdiss- 20W
42	PS0515Y	7	Si	F10p	Pin, VB-150V; Cj at 0.0V-.15pf max, Rs-2 5 ohms max, Pdiss- 20W
43	PS0515Z	7	Si	F10p	Pin; VB-150V; Cj at 0 0V-.15pf max, Rs-3 0 ohms max, Pdiss- 20W
44	PS0520AX	7	Si	F10p	Pin, VB-200V; Cj at 0 0V-.20pf max; Rs-2 0 ohms max, Pdiss- 30W
45	PS0520AY	7	Si	F10p	Pin, VB-200V; Cj at 0 0V-.20pf max, Rs-2 5 ohms max; Pdiss- 30W
46	PS0520AZ	7	Si	F10p	Pin, VB-200V; Cj at 0 0V- 20pf max, Rs-3 0 ohms max, Pdiss- 30W
47	PS0520BX	7	Si	F10p	Pin, VB-200V; Cj at 0 0V-.25pf max; Rs-2 0 ohms max, Pdiss- 40W
48	PS0520BY	7	Si	F10p	Pin, VB-200V, Cj at 0 0V- 25pf max; Rs-2.5 ohms max; Pdiss- 40W
49	PS0520BZ	7	Si	F10p	Pin; VB-200V, Cj at 0 0V-.25pf max; Rs-3 0 ohms max, Pdiss-.40W
50	PS0520CX	7	Si	F10p	Pin, VB-200V, Cj at 0.0V- 30pf max, Rs-2 0 ohms max, Pdiss- 50W
51	PS0520CY	7	Si	F10p	Pin, VB-200V; Cj at 0 0V-.30pf max; Rs-2 5 ohms max; Pdiss- 50W
52	PS0520CZ	7	Si	F10p	Pin, VB-200V; Cj at 0.0V-.30pf max; Rs-3 0 ohms max, Pdiss- 50W.
53	PS0520DX	7	Si	F10p	Pin, VB-200V; Cj at 0.0V- 40pf max; Rs-2.0 ohms max, Pdiss-.75W
54	PS0520DY	7	Si	F10p	Pin, VB-200V; Cj at 0 0V-.40pf max; Rs-2 5 ohms max; Pdiss-.75W
55	PS0520DZ	7	Si	F10p	Pin, VB-200V; Cj at 0 0V- 40pf max; Rs-3 0 ohms max; Pdiss- 75W.
56	PS0520EX	7	Si	F10p	Pin, VB-200V; Cj at 0 0V- 50pf max; Rs-2 0 ohms max, Pdiss-1.0W
57	PS0520EY	7	Si	F10p	Pin, VB-200V; Cj at 0.0V- 50pf max, Rs-2 5 ohms max; Pdiss-1.0W
58	PS0520EZ	7	Si	F10p	Pin; VB-200V; Cj at 0 0V-.50pf max; Rs-3 0 ohms max; Pdiss-1 0W
59	PS0520X	7	Si	F10p	Pin, VB-200V; Cj at 0 0V- 15pf max; Rs-2 0 ohms max, Pdiss-.20W.
60	PS0520Y	7	Si	F10p	Pin, VB-200V; Cj at 0 0V- 15pf max, Rs-2 5 ohms max, Pdiss-.20W
61	PS0520Z	7	Si	F10p	Pin, VB-200V; Cj at 0 0V-.15pf max, Rs-3 0 ohms max; Pdiss-.20W
62	PS0525AX	7	Si	F10p	Pin, VB-250V; Cj at 0 0V- 20pf max; Rs-2 0 ohms max, Pdiss- 30W
63	PS0525AY	7	Si	F10p	Pin, VB-250V; Cj at 0 0V- 20pf max, Rs-2 5 ohms max; Pdiss- 30W
64	PS0525AZ	7	Si	F10p	Pin, VB-250V; Cj at 0 0V- 20pf max, Rs-2 5 ohms max, Pdiss- 30W
65	PS0525BX	7	Si	F10p	Pin, VB-250V; Cj at 0 0V- 25pf max; Rs-2.0 ohms max; Pdiss- 40W
66	PS0525BY	7	Si	F10p	Pin, VB-250V; Cj at 0.0V- 25pf max; Rs-2 5 ohms max, Pdiss- 40W
67	PS0525BZ	7	Si	F10p	Pin; VB-250V; Cj at 0 0V-.25pf max; Rs-2 5 ohms max; Pdiss-.40W
68	PS0525CX	7	Si	F10p	Pin, VB-250V; Cj at 0 0V-.30pf max; Rs-2 0 ohms max; Pdiss- 50W
69	PS0525CY	7	Si	F10p	Pin, VB-250V, Cj at 0 0V-.30pf max, Rs-2 5 ohms max, Pdiss- 50W
70	PS0525CZ	7	Si	F10p	Pin, VB-250V; Cj at 0.0V- 30pf max, Rs-2 5 ohms max; Pdiss-.50W
71	PS0525DX	7	Si	F10p	Pin, VB-250V; Cj at 0 0V- 40pf max; Rs-2 0 ohms max, Pdiss- 75W
72	PS0525DY	7	Si	F10p	Pin; VB-250V, Cj at 0 0V-.40pf max; Rs-2 5 ohms max; Pdiss- 75W.
73	PS0525DZ	7	Si	F10p	Pin; VB-250V; Cj at 0 0V- 40pf max; Rs-2 5 ohms max; Pdiss-.75W
74	PS0525EX	7	Si	F10p	Pin, VB-250V, Cj at 0 0V- 50pf max, Rs-2 0 ohms max; Pdiss-1 0W
75	PS0525EY	7	Si	F10p	Pin; VB-250V; Cj at 0 0V-.50pf max; Rs-2 5 ohms max; Pdiss-1 0W
76	PS0525EZ	7	Si	F10p	Pin; VB-250V; Cj at 0 0V- 50pf max, Rs-2 5 ohms max; Pdiss-1 0W
77	PS0525X	7	Si	F10p	Pin, VB-250V; Cj at 0.0V- 15pf max, Rs-2 0 ohms max; Pdiss- 20W.
78	PS0525Y	7	Si	F10p	Pin, VB-250V; Cj at 0 0V- 15pf max; Rs-2 5 ohms max; Pdiss- 20W.
79	PS0525Z	7	Si	F10p	Pin, VB-250V; Cj at 0 0V- 15pf max; Rs-2.5 ohms max; Pdiss- 20W
80	PS0530AX	7	Si	F10p	Pin, VB-300V; Cj at 0 0V- 20pf max; Rs-2.0 ohms max; Pdiss- 30W
81	PS0530AY	7	Si	F10p	Pin, VB-300V; Cj at 0 0V-.20pf max; Rs-2 5 ohms max; Pdiss-.30W
82	PS0530AZ	7	Si	F10p	Pin; VB-300V; Cj at 0 0V- 20pf max; Rs-3 0 ohms max, Pdiss- 30W
83	PS0530BX	7	Si	F10p	Pin, VB-300V; Cj at 0 0V-.25pf max, Rs-2 0 ohms max, Pdiss-.40W
84	PS0530BY	7	Si	F10p	Pin; VB-300V, Cj at 0 0V- 25pf max; Rs-2.5 ohms max, Pdiss- 40W
85	PS0530BZ	7	Si	F10p	Pin; VB-300V; Cj at 0 0V- 25pf max, Rs-3.0 ohms max; Pdiss- 40W.
86	PS0530CX	7	Si	F10p	Pin, VB-300V; Cj at 0 0V- 30pf max; Rs-2 0 ohms max; Pdiss-.50W
87	PS0530CY	7	Si	F10p	Pin, VB-300V; Cj at 0.0V- 30pf max; Rs-2.5 ohms max; Pdiss-.50W
88	PS0530CZ	7	Si	F10p	Pin; VB-300V; Cj at 0 0V-.30pf max; Rs-3.0 ohms max; Pdiss-.50W
89	PS0530DX	7	Si	F10p	Pin, VB-300V; Cj at 0 0V-.40pf max; Rs-2 0 ohms max; Pdiss- 75W.
90	PS0530DY	7	Si	F10p	Pin, VB-300V; Cj at 0.0V-.40pf max, Rs-2 5 ohms max; Pdiss-.75W
91	PS0530DZ	7	Si	F10p	Pin; VB-300V; Cj at 0 0V-.40pf max; Rs-3 0 ohms max, Pdiss- 75W
92	PS0530EX	7	Si	F10p	Pin; VB-300V; Cj at 0 0V- 50pf max, Rs-2 0 ohms max; Pdiss-1 0W
93	PS0530EY	7	Si	F10p	Pin, VB-300V; CCCj at 0 0V- 50pf max, Rs-2 5 ohms max, Pdiss-1.0W
94	PS0530EZ	7	Si	F10p	Pin, VB-300V; Cj at 0 0V- 50pf max; Rs-3 0 ohms max; Pdiss-1 0W
95	PS0530X	7	Si	F10p	Pin, VB-300V; Cj at 0 0V- 15pf max; Rs-2.0 ohms max, Pdiss-.20W
96	PS0530Y	7	Si	F10p	Pin, VB-300V; Cj at 0 0V- 15pf max; Rs-2 5 ohms max, Pdiss- 20W
97	PS0530Z	7	Si	F10p	Pin, VB-300V; Cj at 0.0V-.15pf max; Rs-3 0 ohms max; Pdiss- 20W.
98	PS0605AX	7	Si	DO7	Pin,VB-50V,Ct at 50V-.60pf max,Rs- 80 ohms max,Pdiss- 40W.
99	PS0605AY	7	Si	DO7	Pin,VB-50V;Ct at 50V-.60pf max;Rs-1 2 ohms max,Pdiss- 40W.
100	PS0605AZ	7	Si	DO7	Pin,VB-50V,Ct at 50V-.60pf max;Rs-1 7 ohms max;Pdiss- 40W
101	PS0605BX	7	Si	DO7	Pin,VB-50V,Ct at 50V- 80pf max;Rs- 60 ohms max,Pdiss- 60W.
102	PS0605BY	7	Si	DO7	Pin,VB-50V;Ct at 50V- 80pf max;Rs-1.0 ohms max;Pdiss-.60W.
103	PS0605BZ	7	Si	DO7	Pin,VB-50V,Ct at 50V-.80pf max;Rs-1 5 ohms max;Pdiss-.60W
104	PS0605CX	7	Si	DO7	Pin,VB-50V;Ct at 50V-1.0pf max;Rs-.40 ohms max;Pdiss-.80W.
105	PS0605CY	7	Si	DO7	Pin;VB-50V;Ct at 50V-1.0pf max;Rs- 80 ohms max,Pdiss- 80W.
106	PS0605CZ	7	Si	DO7	Pin,VB-50V;Ct at 50V-1.0pf max;Rs-1 1 ohms max,Pdiss- 80W.
107	PS0605DX	7	Si	DO7	Pin,VB-50V,Ct at 50V-1 5pf max;Rs- 40 ohms max,Pdiss-1 0W.
108	PS0605DY	7	Si	DO7	Pin;VB-50V;Ct at 50V-1.5pf max;Rs- 80 ohms max,Pdiss-1.0W.
109	PS0605DZ	7	Si	DO7	Pin,VB-50V;Ct at 50V-1.5pf max;Rs-1 1ohms max,Pdiss-1 0W
110	PS0605X	7	Si	DO7	Pin,VB-50V;Ct at 50V-.40pf max;Rs-1 0 ohms max;Pdiss- 20W

SYMBOLS AND CODES EXPLAINED IN INTERPRETER

12. MISCELLANEOUS DIODES

IN ORDER OF (1) USE and (2) TYPE No.

LINE No.	2 TYPE No.	1 USE	DESCRIPTION MAT.	DWG. No.	TECHNICAL DATA
1	PS0605Y	7	Si	DO7	Pin;VB-50V,Ct at 50V-.40pf max,Rs-1 5 ohms max,Pdiss- 20W
2	PS0605Z	7	Si	DO7	Pin;VB-50V;Ct at 50V-.40pf max;Rs-2.0 ohms max,Pdiss-.20W
3	PS0610AX	7	Si	DO7	Pin,VB-100V;Ct at 50V-.60pf max;Rs- 80 ohms max;Pdiss- 40W.
4	PS0610AY	7	Si	DO7	Pin,VB-100V;Ct at 50V- 60pf max;Rs-1.2ohms max;Pdiss-.40W
5	PS0610AZ	7	Si	DO7	Pin;VB-100V;Ct at 50V- 60pf max;Rs-1.7ohms max;Pdiss-.40W
6	PS0610BX	7	Si	DO7	Pin;VB-100V;Ct at 50V- 80pf max;Rs- 60 ohms max;Pdiss- 60W.
7	PS0610BY	7	Si	DO7	Pin;VB-100V,Ct at 50V- 80pf max;Rs-1 0 ohms max,Pdiss- 60W.
8	PS0610BZ	7	Si	DO7	Pin;VB-100V,Ct at 50V-.80pf max;Rs-1 5 ohms max,Pdiss- 60W
9	PS0610CX	7	Si	DO7	Pin;VB-100V;Ct at 50V-1 0max;Rs-.40 ohms max;Pdiss- 80W.
10	PS0610CY	7	Si	DO7	Pin;VB-100V,Ct at 50V-1.0pf max;Rs-.80 ohms max,Pdiss-.80W.
11	PS0610CZ	7	Si	DO7	Pin;VB-100V;Ct at 50V-1.0pf max;Rs-1.1 ohms max;Pdiss-.80W.
12	PS0610DX	7	Si	DO7	Pin;VB-100V;Ct at 50V-1 5pf max;Rs-.40 ohms max;Pdiss-1 0W.
13	PS0610DY	7	Si	DO7	Pin,VB-100V,Ct at 50V-1 5pf max;Rs-.80 ohms max;Pdiss-1 0W.
14	PS0610DZ	7	Si	DO7	Pin,VB-100V;Ct at 50V-1.5pf max;Rs-1 1 ohms max;Pdiss-1 0W
15	PS0610X	7	Si	DO7	Pin;VB-100V;Ct at 50V- 40pf max;Rs-1 0 ohms max,Pdiss- 20W.
16	PS0610Y	7	Si	DO7	Pin,VB-100V,Ct at 50V-.40pf max;Rs-1.5ohms max;Pdiss-.20W.
17	PS0610Z	7	Si	DO7	Pin;VB-100V;Ct at 50V- 40pf max;Rs-2 0 ohms max;Pdiss-.20W.
18	PS0620AX	7	Si	DO7	Pin;VB-200V;Ct at 50V-.60pf max;Rs-.80 ohms max;Pdiss- 40W
19	PS0620AY	7	Si	DO7	Pin;VB-200V;Ct at 50V-.60pf max;Rs-1.2 ohms max;Pdiss- 40W.
20	PS0620AZ	7	Si	DO7	Pin;VB-200V;Ct at 50V- 60pf max;Rs-1 7 ohms max;Pdiss- 40W
21	PS0620BX	7	Si	DO7	Pin;VB-200V;Ct at 50V-.80pf max;Rs-.60 ohms max;Pdiss- 60W.
22	PS0620BY	7	Si	DO7	Pin;VB-200V;Ct at 50V-.80pf max;Rs-1 0 ohms max;Pdiss- 60W.
23	PS0620BZ	7	Si	DO7	Pin,VB-200V;Ct at 50V- 80pf max,Rs-1 5 ohms max;Pdiss- 60W.
24	PS0620CX	7	Si	DO7	Pin;VB-200V;Ct at 50V-1 0pf max;Rs-.40 ohms max;Pdiss-.80W.
25	PS0620CY	7	Si	DO7	Pin,VB-200V;Ct at 50V-1 0pf max,Rs- 80 ohms max,Pdiss- 80W.
26	PS0620CZ	7	Si	DO7	Pin;VB-200V,Ct at 50V-1.0pf max,Rs-1.1 ohms max;Pdiss- 80W.
27	PS0620DX	7	Si	DO7	Pin,VB-200V;Ct at 50V-1 5pf max;Rs- 40 ohms max,Pdiss-1 0W.
28	PS0620DY	7	Si	DO7	Pin,VB-200V;Ct at 50V-1.5pf max;Rs-.80 ohms max;Pdiss-1.0W.
29	PS0620DZ	7	Si	DO7	Pin,VB-200V,Ct at 50V-1 5pf max;Rs-1 1 ohms max;Pdiss-1 0W
30	PS0620X	7	Si	DO7	Pin,VB-200V;Ct at 50V- 40pf max;Rs-1 0 ohms max;Pdiss- 20W.
31	PS0620Y	7	Si	DO7	Pin,VB-200V;Ct at 50V- 40pf max;Rs-1.5 ohms max,Pdiss- 20W.
32	PS0620Z	7	Si	DO7	Pin;VB-200V;Ct at 50V- 40pf max;Rs-2 0 ohms max,Pdiss- 20W.
33	PS0630AX	7	Si	DO7	Pin,VB-300V;Ct at 50V-.60pf max;Rs-.80 ohms max;Pdiss- 40W.
34	PS0630AY	7	Si	DO7	Pin,VB-300V;Ct at 50V-.60pf max;Rs-1.2 ohms max,Pdiss- 40W.
35	PS0630AZ	7	Si	DO7	Pin,VB-300V;Ct at 50V- 60pf max;Rs-1 7 ohms max,Pdiss- 40W.
36	PS0630BX	7	Si	DO7	Pin;VB-300V;Ct at 50V-.80pf max,Rs- 60 ohms max;Pdiss-.60W.
37	PS0630BY	7	Si	DO7	Pin;VB-300V;Ct at 50V- 80pf max;Rs-1 0 ohms max,Pdiss- 60W.
38	PS0630BZ	7	Si	DO7	Pin;VB-300V,Ct at 50V- 80pf max,Rs-1 5 ohms max,Pdiss- 60W.
39	PS0630CX	7	Si	DO7	Pin;VB-300V;Ct at 50V-1.0pf max;Rs- 40 ohms max;Pdiss-.80W.
40	PS0630CY	7	Si	DO7	Pin;VB-300V;Ct at 50V-1 0pf max;Rs- 80 ohms max;Pdiss-.80W
41	PS0630CZ	7	Si	DO7	Pin;VB-300V;Ct at 50V-1 0pf max;Rs-1.1 ohms max;Pdiss- 80W
42	PS0630DX	7	Si	DO7	Pin;VB-300V;Ct at 50V-1 5pf max;Rs-.40 ohms max;Pdiss-1 0W
43	PS0630DY	7	Si	DO7	Pin;VB-300V,Ct at 50V-1.5pf max;Rs-.80 ohms max;Pdiss-1.0W
44	PS0630DZ	7	Si	DO7	Pin;VB-300V,Ct at 50V-1.5pf max;Rs-1 1 ohms max;Pdiss-1.0W
45	PS0630X	7	Si	DO7	Pin;VB-300V,Ct at 50V-.40pf max,Rs-1 0 ohms max,Pdiss- 20W
46	PS0630Y	7	Si	DO7	Pin,VB-300V,Ct at 50V- 40pf max;Rs-1 5 ohms max;Pdiss-.20W.
47	PS0630Z	7	Si	DO7	Pin,VB-300V;Ct at 50V- 40pf max;Rs-2 0 ohms max;Pdiss- 20W
48	PS0640AX	7	Si	DO7	Pin,VB-400V;Ct at 50V- 60pf max;Rs-.80 ohms max,Pdiss- 40W.
49	PS0640AY	7	Si	DO7	Pin;VB-400V,Ct at 50V- 60pf max;Rs-1 2 ohms max;Pdiss- 40W.
50	PS0640AZ	7	Si	DO7	Pin,VB-400V;Ct at 50V- 60pf max;Rs-1 7 ohms max;Pdiss- 40W.
51	PS0640BX	7	Si	DO7	Pin,VB-400V;Ct at 50V- 80pf max,Rs- 60 ohms max;Pdiss- 60W.
52	PS0640BY	7	Si	DO7	Pin,VB-400V;Ct at 50V-.80pf max,Rs-1.0 ohms max,Pdiss-.60W.
53	PS0640BZ	7	Si	DO7	Pin;VB-400V;Ct at 50V- 80pf max;Rs-1 5 ohms max;Pdiss- 60W.
54	PS0640CX	7	Si	DO7	Pin;VB-400V;Ct at 50V-1.0pf max;Rs- 40 ohms max;Pdiss- 80W
55	PS0640CY	7	Si	DO7	Pin;VB-400V,Ct at 50V-1 0pf max;Rs- 80 ohms max;Pdiss- 80W.
56	PS0640CZ	7	Si	DO7	Pin;VB-400V,Ct at 50V-1 0pf max;Rs-1 1 ohms max;Pdiss- 80W
57	PS0640DX	7	Si	DO7	Pin,VB-400V;Ct at 50V-1.5pf max,Rs- 40 ohms max;Pdiss-1.0W
58	PS0640DY	7	Si	DO7	Pin;VB-400V;Ct at 50V-1 5pf max,Rs- 80 ohms max;Pdiss-1.0W
59	PS0640DZ	7	Si	DO7	Pin;VB-400V;Ct at 50V-1 5pf max,Rs-1.1 ohms max;Pdiss-1 0W
60	PS0640X	7	Si	DO7	Pin,VB-400V;Ct at 50V-.40pf max;Rs-1 0 ohms max,Pdiss- 20W.
61	PS0640Y	7	Si	DO7	Pin,VB-400V,Ct at 50V- 40pf max,Rs-1 5 ohms max;Pdiss-.20W.
62	PS0640Z	7	Si	DO7	Pin;VB-400V;Ct at 50V- 40pf max,Rs-2 0 ohms max,Pdiss-.20W.
63	PS0650AX	7	Si	DO7	Pin;VB-500V;Ct at 50V- 60pf max;Rs- 80 ohms max;Pdiss- 40W
64	PS0650AY	7	Si	DO7	Pin,VB-500V;Ct at 50V- 60pf max;Rs-1 2 ohms max;Pdiss-.40W
65	PS0650AZ	7	Si	DO7	Pin;VB-500V;Ct at 50V- 60pf max;Rs-1 7 ohms max;Pdiss- 40W
66	PS0650BX	7	Si	DO7	Pin,VB-500V;Ct at 50V-.80pf max;Rs-.60 ohms max;Pdiss- 60W.
67	PS0650BY	7	Si	DO7	Pin;VB-500V,Ct at 50V-.80pf max;Rs-1 0 ohms max;Pdiss- 60W
68	PS0650BZ	7	Si	DO7	Pin;VB-500V;Ct at 50V- 80pf max;Rs-1 5 ohms max;Pdiss-.60W.
69	PS0650CX	7	Si	DO7	Pin;VB-500V;Ct at 50V-1.0pf max,Rs-.40 ohms max;Pdiss-.80W.
70	PS0650CY	7	Si	DO7	Pin;VB-500V,Ct at 50V-1 0pf max,Rs- 80 ohms max;Pdiss-.80W.
71	PS0650CZ	7	Si	DO7	Pin,VB-500V,Ct at 50V-1.0pf max;Rs-1 1 ohms max;Pdiss-.80W.
72	PS0650DX	7	Si	DO7	Pin,VB-500V;Ct at 50V-1 5pf max;Rs-.40 ohms max;Pdiss-1.0W.
73	PS0650DY	7	Si	DO7	Pin,VB-500V;Ct at 50V-1 5pf max;Rs- 80 ohms max;Pdiss-1.0W.
74	PS0650DZ	7	Si	DO7	Pin,VB-500V;Ct at 50V-1 5pf max;Rs-1 1 ohms max,Pdiss-1.0W.
75	PS0650X	7	Si	DO7	Pin;VB-500V,Ct at 50V-.40pf max;Rs-1.0 ohms max;Pdiss- 20W.
76	PS0650Y	7	Si	DO7	Pin,VB-500V,Ct at 50V- 40pf max;Rs-1 5 ohms max;Pdiss-.20W
77	PS0650Z	7	Si	DO7	Pin,VB-500V;Ct at 50V- 40pf max,Rs-2 0 ohms max;Pdiss-.20W
78	PS0805AX	7	Si	A1ag	Pin;VB-50V,Ct at 50V-.60pf max;Rs- 80 ohms max,Pdiss- 225W
79	PS0805AY	7	Si	A1ag	Pin;VB-50V;Ct at 50V-.60pf max;Rs-1 2 ohms max;Pdiss-.225W
80	PS0805AZ	7	Si	A1ag	Pin;VB-50V;Ct at 50V- 60pf max;Rs-1 7 ohms max,Pdiss-.225W.
81	PS0805BX	7	Si	A1ag	Pin;VB-50V,Ct at 50V-.80pf max,Rs-.60 ohms max,Pdiss- 30W
82	PS0805BY	7	Si	A1ag	Pin;VB-50V,Ct at 50V-.80pf max;Rs-1.0 ohms max,Pdiss- 30W
83	PS0805BZ	7	Si	A1ag	Pin,VB-50V;Ct at 50V- 80pf max;Rs-1 5 ohms max;Pdiss- 30W.
84	PS0805CX	7	Si	A1ag	Pin;VB-50V;Ct at 50V-1 0pf max;Rs- 40 ohms max;Pdiss-.45W.
85	PS0805CY	7	Si	A1ag	Pin;VB-50V;Ct at 50V-1 0pf max;Rs- 80 ohms max,Pdiss- 45W
86	PS0805CZ	7	Si	A1ag	Pin;VB-50V;Ct at 50V-1 0pf max;Rs-1 1 ohms max,Pdiss-.45W
87	PS0805DX	7	Si	A1ag	Pin;VB-50V,Ct at 50V-1.5pf max;Rs-.40 ohms max,Pdiss- 60W
88	PS0805DY	7	Si	A1ag	Pin;VB-50V,Ct at 50V-1.5pf max,Rs-.80 ohms max,Pdiss- 60W.
89	PS0805DZ	7	Si	A1ag	Pin;VB-50V;Ct at 50V-1 5pf max;Rs-1.1 ohms max,Pdiss- 60W
90	PS0805X	7	Si	A1ag	Pin;VB-50V;Ct at 50V- 40pf max;Rs-1 0 ohms max;Pdiss- 15W.
91	PS0805Y	7	Si	A1ag	Pin,VB-50V;Ct at 50V- 40pf max,Rs-1.5 ohms max,Pdiss-.15W.
92	PS0805Z	7	Si	A1ag	Pin;VB-50V,Ct at 50V-.40pf max;Rs-2 0 ohms max,Pdiss- 15W.
93	PS0810AX	7	Si	A1ag	Pin;VB-100V;Ct at 50V-.60pf max;Rs- 80 ohms max,Pdiss- 225W
94	PS0810AY	7	Si	A1ag	Pin;VB-100V;Ct at 50V-.60pf max;Rs-1 2 ohms max;Pdiss- 225W
95	PS0810AZ	7	Si	A1ag	Pin;VB-100V,Ct at 50V- 60pf max;Rs-1 7 ohms max;Pdiss- 225W
96	PS0810BX	7	Si	A1ag	Pin,VB-100V;Ct at 50V- 80pf max,Rs- 60 ohms max;Pdiss-.30W
97	PS0810BY	7	Si	A1ag	Pin,VB-100V,Ct at 50V-.80pf max,Rs-1 0 ohms max;Pdiss- 30W
98	PS0810BZ	7	Si	A1ag	Pin,VB-100V;Ct at 50V- 80pf max;Rs-1 5 ohms max;Pdiss- 30W
99	PS0810CX	7	Si	A1ag	Pin,VB-100V;Ct at 50V-1 0pf max;Rs-.40 ohms max;Pdiss- 45W
100	PS0810CY	7	Si	A1ag	Pin;VB-100V;Ct at 50V-1 0pf max,Rs- 80 ohms max;Pdiss- 45W.
101	PS0810CZ	7	Si	A1ag	Pin,VB-100V;Ct at 50V-1 0pf max;Rs-1 1 ohms max;Pdiss- 45W
102	PS0810DX	7	Si	A1ag	Pin;VB-100V;Ct at 50V-1 5pf max,Rs-.40 ohms max;Pdiss- 60W
103	PS0810DY	7	Si	A1ag	Pin,VB-100V,Ct at 50V-1 5pf max;Rs-.80 ohms max;Pdiss- 60W
104	PS0810DZ	7	Si	A1ag	Pin;VB-100V,Ct at 50V-1 5pf max;Rs-1 1 ohms max;Pdiss- 60W
105	PS0810X	7	Si	A1ag	Pin;VB-100V;Ct at 50V- 40pf max,Rs-1.0 ohms max;Pdiss- 15W
106	PS0810Y	7	Si	A1ag	Pin;VB-100V;Ct at 50V-.40pf max;Rs-1.5 ohms max;Pdiss- 15W
107	PS0810Z	7	Si	A1ag	Pin;VB-100V,Ct at 50V-.40pf max,Rs-2 0 ohms max,Pdiss-.15W.
108	PS0820AX	7	Si	A1ag	Pin,VB-200V;Ct at 50V- 60pf max;Rs-.80 ohms max;Pdiss- 225W
109	PS0820AY	7	Si	A1ag	Pin,VB-200V,Ct at 50V- 60pf max,Rs-1 2 ohms max;Pdiss-.225W
110	PS0820AZ	7	Si	A1ag	Pin,VB-200V;Ct at 50V- 60pf max,Rs-1 7 ohms max;Pdiss-.225W

SYMBOLS AND CODES EXPLAINED IN INTERPRETER

12. MISCELLANEOUS DIODES

IN ORDER OF (1) USE and (2) TYPE No.

LINE No.	2 TYPE No.	1 USE	DESCRIPTION MAT.	DWG. No.	TECHNICAL DATA
1	PS0820BX	7	Si	A1ag	Pin,VB-200V,Ct at 50V- 80pf max,Rs- 60 ohms max;Pdiss- 30W
2	PS0820BY	7	Si	A1ag	Pin;VB-200V,Ct at 50V- 80pf max,Rs-1 0 ohms max;Pdiss- 30W
3	PS0820BZ	7	Si	A1ag	Pin;VB-200V;Ct at 50V- 80pf max,Rs-1 5 ohms max;Pdiss-.30W
4	PS0820CX	7	Si	A1ag	Pin,VB-200V,Ct at 50V-1 0pf max,Rs- 40 ohms max,Pdiss- 45W
5	PS0820CY	7	Si	A1ag	Pin;VB-200V,Ct at 50V-1.0pf max;Rs- 80 ohms max;Pdiss- 45W.
6	PS0820CZ	7	Si	A1ag	Pin;VB-200V;Ct at 50V-1 0pf max;Rs-1.1 ohms max;Pdiss- 45W.
7	PS0820DX	7	Si	A1ag	Pin,VB-200V;Ct at 50V-1.5pf max,Rs-.40 ohms max,Pdiss-.60W
8	PS0820DY	7	Si	A1ag	Pin;VB-200V,Ct at 50V-1.5pf max,Rs-.80 ohms max,Pdiss- 60W.
9	PS0820DZ	7	Si	A1ag	Pin,VB-200V;Ct at 50V-1.5pf max;Rs-1.1 ohms max;Pdiss-.60W
10	PS0820X	7	Si	A1ag	Pin;VB-200V;Ct at 50V- 40pf max,Rs-1 0 ohms max,Pdiss-.15W
11	PS0820Y	7	Si	A1ag	Pin;VB-200V;Ct at 50V-.40pf max;Rs-1 5 ohms max;Pdiss-.15W
12	PS0820Z	7	Si	A1ag	Pin;VB-200V;Ct at 50V-.40pf max;Rs-2.0 ohms max,Pdiss- 15W.
13	PS0830AX	7	Si	A1ag	Pin,VB-300V;Ct at 50V-.60pf max;Rs- 80 ohms max,Pdiss- 225W.
14	PS0830AY	7	Si	A1ag	Pin,VB-300V;Ct at 50V- 60pf max,Rs-1.2 ohms max;Pdiss- 225W
15	PS0830AZ	7	Si	A1ag	Pin;VB-300V;Ct at 50V-.60pf max,Rs-1.7 ohms max;Pdiss- 225W.
16	PS0830BX	7	Si	A1ag	Pin,VB-300V;Ct at 50V- 80pf max;Rs- 60 ohms max,Pdiss-.30W.
17	PS0830BY	7	Si	A1ag	Pin,VB-300V;Ct at 50V- 80pf max;Rs-1.0 ohms max,Pdiss- 30W.
18	PS0830BZ	7	Si	A1ag	Pin,VB-300V;Ct at 50V-.80pf max;Rs-1.5ohms max;Pdiss- 30W
19	PS0830CX	7	Si	A1ag	Pin;VB-300V;Ct at 50V-1.0pf max;Rs-.40 ohms max;Pdiss-.45W.
20	PS0830CY	7	Si	A1ag	Pin;VB-300V,Ct at 50V-1.0pf max;Rs- 80 ohms max;Pdiss-.45W
21	PS0830CZ	7	Si	A1ag	Pin;VB-300V,Ct at 50V-1.0pf max,Rs-1.1ohms max;Pdiss- 45W
22	PS0830DX	7	Si	A1ag	Pin;VB-300V;Ct at 50V-1.5pf max;Rs-.40 ohms max;Pdiss- 60W.
23	PS0830DY	7	Si	A1ag	Pin,VB-300V;Ct at 50V-1.5pf max;Rs-.80 ohms max;Pdiss- 60W.
24	PS0830DZ	7	Si	A1ag	Pin;VB-300V;Ct at 50V-1.5pf max;Rs-1 1ohms max,Pdiss-.60W
25	PS0830X	7	Si	A1ag	Pin;VB-300V,Ct at 50V- 40pf max;Rs-1 0 ohms max;Pdiss-.15W.
26	PS0830Y	7	Si	A1ag	Pin;VB-300V;Ct at 50V-.40pf max,Rs-1 5 ohms max;Pdiss-.15W.
27	PS0830Z	7	Si	A1ag	Pin,VB-300V;Ct at 50V-.40pf max,Rs-2.0 ohms max;Pdiss-.15W.
28	PS0840AX	7	Si	A1ag	Pin,VB-400V;Ct at 50V-.60pf max;Rs-.80 ohms max,Pdiss- 225W
29	PS0840AY	7	Si	A1ag	Pin;VB-400V,Ct at 50V-.60pf max;Rs-1 2ohms max;Pdiss-.225W
30	PS0840AZ	7	Si	A1ag	Pin;VB-400V,Ct at 50V-.60pf max;Rs-1 7ohms max;Pdiss- 225W
31	PS0840BX	7	Si	A1ag	Pin,VB-400V,Ct at 50V-.80pf max,Rs- 60 ohms max,Pdiss- 30W
32	PS0840BY	7	Si	A1ag	Pin;VB-400V,Ct at 50V-.80pf max;Rs-1 0 ohms max,Pdiss- 30W
33	PS0840BZ	7	Si	A1ag	Pin,VB-400V;Ct at 50V-.80pf max,Rs-1.5ohms max,Pdiss- 30W.
34	PS0840CX	7	Si	A1ag	Pin;VB-400V;Ct at 50V-1 0pf max,Rs-.40 ohms max;Pdiss-.45W
35	PS0840CY	7	Si	A1ag	Pin,VB-400V,Ct at 50V-1.0pf max,Rs-.80 ohms max;Pdiss- 45W
36	PS0840CZ	7	Si	A1ag	Pin;VB-400V;Ct at 50V-1 0pf max,Rs-1 1ohms max,Pdiss-.45W.
37	PS0840DX	7	Si	A1ag	Pin;VB-400V;Ct at 50V-1.5pf max;Rs- 40 ohms max;Pdiss- 60W.
38	PS0840DY	7	Si	A1ag	Pin;VB-400V,Ct at 50V-1.5pf max;Rs-.80 ohms max;Pdiss-.60W.
39	PS0840DZ	7	Si	A1ag	Pin,VB-400V;Ct at 50V-1.5pf max;Rs-1 1ohms max;Pdiss- 60W
40	PS0840X	7	Si	A1ag	Pin;VB-400V;Ct at 50V-.40pf max;Rs-1 0 ohms max;Pdiss- 15W
41	PS0840Y	7	Si	A1ag	Pin;VB-400V,Ct at 50V-.40pf max;Rs-1 5ohms max;Pdiss-.15W.
42	PS0840Z	7	Si	A1ag	Pin;VB-400V;Ct at 50V-.40pf max;Rs-2 0 ohms max;Pdiss- 15W.
43	PS0850AX	7	Si	A1ag	Pin;VB-500V,Ct at 50V-.60pf max;Rs-.80 ohms max;Pdiss-.225W.
44	PS0850AY	7	Si	A1ag	Pin;VB-500V,Ct at 50V-.60pf max;Rs-1 2ohms max,Pdiss- 225W
45	PS0850AZ	7	Si	A1ag	Pin,VB-500V;Ct at 50V-.60pf max;Rs-1 7ohms max,Pdiss-.225W.
46	PS0850BX	7	Si	A1ag	Pin,VB-500V,Ct at 50V-.80pf max;Rs- 60 ohms max;Pdiss- 30W.
47	PS0850BY	7	Si	A1ag	Pin;VB-500V;Ct at 50V-.80pf max;Rs-1 0 ohms max;Pdiss- 30W.
48	PS0850BZ	7	Si	A1ag	Pin;VB-500V;Ct at 50V-.80pf max;Rs-1 5ohms max;Pdiss- 30W
49	PS0850CX	7	Si	A1ag	Pin,VB-500V;Ct at 50V-1 0pf max;Rs-.40 ohms max;Pdiss- 45W
50	PS0850CY	7	Si	A1ag	Pin;VB-500V,Ct at 50V-1.0pf max;Rs- 80 ohms max;Pdiss-.45W.
51	PS0850CZ	7	Si	A1ag	Pin;VB-500V;Ct at 50V-1 0pf max;Rs-1 1ohms max;Pdiss- 45W
52	PS0850DX	7	Si	A1ag	Pin;VB-500V;Ct at 50V-1 5pf max;Rs- 40 ohms max;Pdiss-.60W.
53	PS0850DY	7	Si	A1ag	Pin;VB-500V;Ct at 50V-1.5pf max;Rs- 80 ohms max;Pdiss-.60W.
54	PS0850DZ	7	Si	A1ag	Pin;VB-500V,Ct at 50V-1.5pf max;Rs-1 1ohms max,Pdiss- 60W
55	PS0850X	7	Si	A1ag	Pin;VB-500V,Ct at 50V- 40pf max;Rs-1 0 ohms max;Pdiss- 15W.
56	PS0850Y	7	Si	A1ag	Pin,VB-500V;Ct at 50V- 40pf max,Rs-1 5ohms max;Pdiss- 15W
57	PS0850Z	7	Si	A1ag	Pin;VB-500V,Ct at 50V-.40pf max,Rs-2 0 ohms max;Pdiss-.15W
58#	SFD2310	7	Si	F27d	Pin;Breakdown Voltage 800V min;Ctotal 1 2pF max,RS .60Ω max at -50V;Pdiss 5W.
59#	SFD2314	7	Si§	F27d	Pin;Breakdown Voltage 750V min,Ctotal 500ff max,RS 800mΩ max at -50V;Pdiss 5W.
60#	SFD2315	7	Si§	F27d	Pin;Breakdown Voltage 750V min;Ctotal 800ff max;RS 800mΩ max at -50V;Pdiss 5W.
61#	SFD2316	7	Si§	F27d	Pin;Breakdown Voltage 750V min;Ctotal 700ff max;RS 500mΩ max at -50V;Pdiss 5W.
62#	SFD2317	7	Si§	F27d	Pin;Breakdown Voltage 1200V min;Ctotal 1.0pF max;RS 800mΩ max at -50V;Pdiss 5W
63	UM2010A	7	Si	F32d	Pin;Pd-20W,PIV-1000V;Rs-.4ohms,CT- 9pf at 0V;Cutoff freq.-300GHz.
64	UM2010B	7	Si	A146b	Pin;Pd-20W;PIV-1000V;Rs- 4ohms;CT-.90pf at 0V,Cutoff freq.-300GHz
65	UM2010C	7	Si	S288a	Pin;Pd-20W,PIV-1000V;Rs-.4ohms;CT-.90pf at 0V,Cutoff freq -300GHz
66	UM2012A	7	Si	F32d	Pin;Pd-20W,PIV-1200V,Rs-.4ohms,CT-.9pf at 0V,Cutoff freq.-300GHz
67	UM2012B	7	Si	A146b	Pin;Pd-20W;PIV-1200V;Rs- 4ohms;CT-.90pf at 0V;Cutoff freq -300GHz
68	UM2012C	7	Si	S288a	Pin;Pd-20W;PIV-1200V;Rs- 4ohms;CT-.90pf at 0V;Cutoff freq -300GHz
69	UM2014A	7	Si	F32d	Pin;Pd-20W;PIV-1400V;Rs-.40 ohms;CT-.90pf at 0V;Cutoff Freq -300GHz
70	UM2014B	7	Si	A146b	Pin;Pd-20W;PIV-1400V;Rs- 4ohms;CT- 90pf at 0V;Cutoff freq -300GHz.
71	UM2014C	7	Si	S288a	Pin,Pd-20W;PIV-1400V;Rs-.4ohms;CT- 90pf at 0V;Cutoff freq -300GHz.
72	UM2016A	7	Si	F32d	Pin;Pd-20W;PIV-1600V;Rs- 4ohms;CT-.9pf at 0V,Cutoff freq.-300GHz
73	UM2016B	7	Si	A146b	Pin,Pd-20W,PIV-1600V;Rs-.4ohms;CT-.90pf at 0V;Cutoff freq -300GHz
74	UM2016C	7	Si	S288a	Pin;Pd-20W;PIV-1600V;Rs- 4ohms;CT-.90pf at 0V;Cutoff freq.-300GHz
75	UM2018A	7	Si	F32d	Pin;Pd-20W;PIV-1800V;Rs-.4ohms;CT-.9pf at 0V;Cutoff freq.-300GHz
76	UM2018B	7	Si	A146b	Pin;Pd-20W;PIV-1800V;Rs-.4ohms;CT-.90pf at 0V;Cutoff freq.-300GHz
77	UM2018C	7	Si	S288a	Pin;Pd-20W,PIV-1800V;Rs- 4ohms;CT-.90pf at 0V;Cutoff freq.-300GHz
78	UM2020A	7	Si	F32d	Pin;Pd-20W;PIV-2000V;Rs-.4ohms;CT-.9pf at 0V,Cutoff freq -300GHz.
79	UM2020B	7	Si	A146b	Pin,Pd-20W,PIV-2000V;Rs-.4ohms;CT-.90pf at 0V,Cutoff freq.-300GHz
80	UM2020C	7	Si	S288a	Pin;Pd-20W,PIV-2000V;Rs-.4ohms;CT-.90pf at 0V;Cutoff freq -300GHz
81	UM4902A	7	Si	F32c	Pin;Pd-80W,PIV-200V;Rs-.15ohms;CT-3.0pf at 0V;Cutoff freq.-200GHz.
82	UM4902B	7	Si	A146c	Pin;Pd-80W,PIV-200V;Rs-.15ohms;CT-3.0pf at 0V;Cutoff freq.-200GHz.
83	UM4902C	7	Si	S288	Pin;Pd-80W;PIV-200V;Rs-.15ohms;CT-3 0pf at 0V;Cutoff freq.-200GHz
84	UM4904A	7	Si	F32c	Pin;Pd-80W;PIV-400V;Rs-.15ohms;CT-3.0pf at 0V;Cutoff freq.-200GHz.
85	UM4904B	7	Si	A146c	Pin;Pd-80W,PIV-400V;Rs- 15ohms;CT-3.0pf at 0V;Cutoff freq.-200GHz.
86	UM4904C	7	Si	S288	Pin;Pd-80W;PIV-400V;Rs- 15ohms;CT-3 0pf at 0V;Cutoff freq.-200GHz
87	UM4906A	7	Si	F32c	Pin;Pd-80W;PIV-600V;Rs- 15ohms;CT-3.0pf at 0V;Cutoff freq.-200GHz.
88	UM4906B	7	Si	A146c	Pin,Pd-80W;PIV-600V;Rs-.15ohms;CT-3.0pf at 0V;Cutoff freq -200GHz.
89	UM4906C	7	Si	S288	Pin;Pd-80W;PIV-600V;Rs-.15ohms,CT-3.0pf at 0V;Cutoff freq -200GHz.
90	UM4908A	7	Si	F32c	Pin,Pd-80W;PIV-800V;Rs-.15ohms;CT-3.0pf at 0V;Cutoff freq.-200GHz.
91	UM4908B	7	Si	A146c	Pin;Pd-80W;PIV-800V;Rs- 15ohms;CT-3.0pf at 0V,Cutoff freq.-200GHz.
92	UM4908C	7	Si	S288	Pin;Pd-80W,PIV-800V;Rs-.15ohms;CT-3.0pf at 0V;Cutoff freq.-200GHz.
93	UM4910A	7	Si	F32c	Pin;Pd-80W;PIV-1000V;Rs-.15ohms;CT-3.0pf at 0V;Cutoff freq.-200GHz.
94	UM4910B	7	Si	A146c	Pin;Pd-80W;PIV-1000V,Rs-.15ohms;CT-3 0pf at 0V,Cutoff freq -200GHz
95	UM4910C	7	Si	S288	Pin,Pd-80W,PIV-1000V;Rs-.15ohms;CT-3.0pf at 0V;Cutoff freq.-200GHz
96	UM6002A	7	Si	F32e	Pin;Pd-10W;PIV-200V;Rs-.8ohms;CT- 50pf at 0V,Cutoff freq.-350GHz.
97	UM6002B	7	Si	A146a	Pin;Pd-10W;PIV-200V;Rs-.8ohms;CT- 50pf at 0V,Cutoff freq -350GHz
98	UM6002C	7	Si	F74	Pin,Pd-10W;PIV-200V;Rs- 8ohms;CT- 50pf at 0V;Cutoff freq.-350GHz.
99	UM6004A	7	Si	F32e	Pin,Pd-10W,PIV-400V;Rs- 8ohms;CT-.50pf at 0V;Cutoff freq -350GHz
100	UM6004B	7	Si	A146a	Pin;Pd-10W;PIV-400V;Rs- 8ohms;CT- 50pf at 0V;Cutoff freq -350GHz
101	UM6004C	7	Si	F74	Pin;Pd-10W,PIV-400V;Rs-.8ohms;CT- 50pf at 0V;Cutoff freq.-350GHz
102	UM6006A	7	Si	F32e	Pin;Pd-10W;PIV-600V;Rs-.8ohms;CT-.50pf at 0V;Cutoff freq.-350GHz.
103	UM6006B	7	Si	A146a	Pin;Pd-10W;PIV-600V;Rs-.8ohms;CT- 50pf at 0V;Cutoff freq.-350GHz.
104	UM6006C	7	Si	F74	Pin;Pd-10W;PIV-600V;Rs-.8ohms;CT-.50pf at 0V;Cutoff freq -350GHz.
105	UM7002A	7	Si	F32d	Pin;Pd-20W;PIV-200V;Rs- 3ohms;CT-.90pf at 0V;Cutoff freq.-300GHz.
106	UM7002B	7	Si	A146b	Pin;Pd-20W;PIV-200V;Rs-.3ohms,CT-.90pf at 0V;Cutoff freq -300GHz
107	UM7002C	7	Si	S288a	Pin,Pd-20W;PIV-200V;Rs-.3ohms;CT-.90pf at 0V,Cutoff freq -300GHz
108	UM7004A	7	Si	F32d	Pin;Pd-20W;PIV-400V;Rs-.3ohms;CT-.90pf at 0V;Cutoff freq.-300GHz.
109	UM7004B	7	Si	A146b	Pin;Pd-20W;PIV-400V;Rs- 3ohms;CT- 90pf at 0V;Cutoff freq.-300GHz.
110	UM7004C	7	Si	S288a	Pin,Pd-20W;PIV-400V;Rs-.3ohms;CT-.90pf at 0V;Cutoff freq.-300GHz

SYMBOLS AND CODES EXPLAINED IN INTERPRETER

12. MISCELLANEOUS DIODES

IN ORDER OF (1) USE and (2) TYPE No.

LINE No.	2 TYPE No.	1 USE	DESCRIPTION MAT.	DWG. No.	TECHNICAL DATA
1	UM7006A	7	Si	F32d	Pin;Pd-20W;PIV-600V;Rs-.3ohms,CT-.90pf at 0V;Cutoff freq.-300GHz.
2	UM7006B	7	Si	A146b	Pin;Pd-20W;PIV-600V;Rs-.3ohms;CT-.90pf at 0V;Cutoff freq.-300GHz.
3	UM7006C	7	Si	S288a	Pin;Pd-20W;PIV-600V;Rs-.3ohms;CT-.90pf at 0V;Cutoff freq.-300GHz.
4	UM7008A	7	Si	F32d	Pin;Pd-20W;PIV-800V;Rs-.3ohms;CT-.90pf at 0V;Cutoff freq.-300GHz.
5	UM7008B	7	Si	A146b	Pin;Pd-20W;PIV-800V;Rs-.3ohms;CT-.90pf at 0V;Cutoff freq.-300GHz.
6	UM7008C	7	Si	S288a	Pin;Pd-20W;PIV-800V;Rs-.3ohms;CT-.90pf at 0V;Cutoff freq.-300GHz.
7	UM7010A	7	Si	F32d	Pin;Pd-20W;PIV-1000V;Rs-.3ohms;CT-.90pf at 0V;Cutoff freq.-300GHz.
8	UM7010B	7	Si	A146b	Pin;Pd-20W;PIV-1000V;Rs-.3ohms;CT-.90pf at 0V;Cutoff freq.-300GHz.
9	UM7010C	7	Si	S288a	Pin;Pd-20W;PIV-1000V;Rs-.3ohms;CT-.90pf at 0V;Cutoff freq.-300GHz.
10	VSD201N10	7	Si	F54	Pin;Breakdown Voltage-200V min;C total-.50pf max;RS-1.5ohms max;Pd-3.0W.
11	VSD201N19	7	Si	F27t	Pin;Breakdown Voltage-200V min;C total- 50pf max;RS-1.5ohms max;Pd-3.0W.
12	VSD201N20	7	Si	F27f	Pin;Breakdown Voltage-200V min;C total-.50pf max;RS-1 5ohms max;Pd-3.0W.
13	VSD203N19	7	Si	F27t	Pin;Breakdown Voltage-200V min;C total-1.5pf max;RS-.70ohms max;Pd-5.0W.
14	VSD203N20	7	Si	F27f	Pin;Breakdown Voltage-200V min;C total-1.5pf max;RS- 70ohms max;Pd-5 0W.
15	VSD211N10	7	Si	F54	PIN;BV200V;Cj .20pf;max at 0.V;Rs;2Ωmax;Pd 1.0Wmax.
16	VSD211N19	7	Si	F27t	PIN;BV200V;Cj 20pf;max. at 0.V;Rs 2Ωmax.;Pd 5.0Wmax.
17	VSD211N20	7	Si	F27f	PIN;BV200V;Cj .20pf;max. at 0.V;Rs;2Ωmax.;Pd 5.0Wmax
18	VSD501N10	7	Si	F54	Pin;Breakdown Voltage-500V min;C total- 40pf max;RS-1.5ohms max;Pd-5.0W.
19	VSD501N19	7	Si	F27t	Pin;Breakdown Voltage-500V min;C total-.40pf max;RS-1.5ohms max;Pd-5.0W.
20	VSD501N20	7	Si	F27f	Pin;Breakdown Voltage-500V min;C total-.40pf max;RS-1.5ohms max;Pd-3.0W.
21	VSD502N10	7	Si	F54	Pin;Breakdown Voltage-500V min;C total-.80pf max;RS-.80ohms max;Pd-10W.
22	VSD502N19	7	Si	F27t	Pin;Breakdown Voltage-500V min;C total- 80pf max;RS-.80ohms max;Pd-10W.
23	VSD502N20	7	Si	F27f	Pin;Breakdown Voltage-500V min;C total- 80pf max;RS-.80ohms max;Pd-10W.
24	VSD503N19	7	Si	F27t	Pin;Breakdown Voltage-500V min;C total-1.5pf max;RS-.50ohms max;Pd-15W.
25	VSD503N20	7	Si	F27f	Pin;Breakdown Voltage-500V min;C total-1 5pf max;RS-.50ohms max;Pd-15W.
26	VSD521N10	7	Si	F54	Pin;Breakdown Voltage-500V min;C total- 40pf max;RS- 60ohms max;Pd-5.0W.
27	VSD521N19	7	Si	F27t	Pin;Breakdown Voltage-500V min;C total-.40pf max;RS-.60ohms max;Pd-5.0W
28	VSD521N20	7	Si	F27f	Pin;Breakdown Voltage-500V min;C total- 40pf max;RS- 60ohms max;Pd-5 0W.
29	VSD522N10	7	Si	F54	Pin;Breakdown Voltage-500V min;C total-.80pf max;RS-.40ohms max;Pd-10W.
30	VSD522N19	7	Si	F27t	Pin;Breakdown Voltage-500V min,C total- 80pf max;RS-.40ohms max;Pd-10W.
31	VSD522N20	7	Si	F27f	Pin;Breakdown Voltage-500V min,C total-.80pf max;RS- 40ohms max;Pd-10W.
32	VSD523N19	7	Si	F27t	Pin;Breakdown Voltage-500V min;C total-1 5pf max;RS- 30ohms max;Pd-15W.
33	VSD523N20	7	Si	F27f	Pin;Breakdown Voltage-500V min,C total-1 5pf max;RS-.30ohms max;Pd-15W.
34	VSD701N19	7	Si	F27t	Pin;Breakdown Voltage-750V min;C total-.40pf max;RS-1 3ohms max;Pd-5.0W.
35	VSD701N20	7	Si	F27f	Pin;Breakdown Voltage-750V min;C total-.40pf max;RS-1.3ohms max,Pd-5.0W.
36	VSD702N19	7	Si	F27t	Pin;Breakdown Voltage-750V min;C total-.80pf max;RS- 80ohms max,Pd-10W
37	VSD702N20	7	Si	F27f	Pin;Breakdown Voltage-750V min;C total- 80pf max;RS- 80ohms max;Pd-10W.
38	VSD721N19	7	Si	F27t	Pin;Breakdown Voltage-750V min;C total-.40pf max;RS-.60ohms max;Pd-5 0W.
39	VSD721N20	7	Si	F27f	Pin;Breakdown Voltage-750V min;C total-.40pf max;RS-.60ohms max;Pd-5 0W.
40	VSD722N19	7	Si	F27t	Pin;Breakdown Voltage-750V min;C total-.80pf max,RS-.40ohms max;Pd-10W.
41	VSD722N20	7	Si	F27f	Pin;Breakdown Voltage-750V min;C total-.80pf max;RS-.40ohms max;Pd-10W.
42	1N105	8		M85	PIV-30V.,Rev R-150K from 0 to 10V
43	1N830A	8	Si	A196b	PIV-5V · Rect. Eff- 65%; If-25mA.
44	JAN1N830A	8	Si	A1	Rect. Eff- 65 %; VR- 2 0V max; IF- 25mA max.
45#	1S12	8	Ge	A1gj	PIV-22.5V· Rect.Eff.-50% min. at 30Mc.
46#	1S454	8	Ge	DO7	PIV-45V; Rect Eff.-50% min. at 40Mc.
47#	1S455	8	Ge	DO7	PIV-35V; Ret Eff.-60% min at 40Mc.
48	MA439	8	Si	P3	X Band Controlled Voltage Detector.
49#	OA70	8	Ge	A1gj	Detector to 100Mc;PIV-15V,If 10mA at VF- 25V max.
50	PD0810	8	Si	A1ad	S Band;Rectifier Efficiency at 100MHz-70%,PRV-5.0V min.
51	PD0810A	8	Si	A1ad	S Band;Rectifier Efficiency at 100MHz-70%;PRV-2 0V min.
52	PD0810AL	8	Si	M86c△	S Band;Rectifier Efficiency at 100MHz-70%;PRV-2.0V min.
53	PD0810L	8	Si	M86c△	S Band;Rectifier Efficiency at 100MHz-70%;PRV-5 0V min.
54	1N5427	9	Si	DO7	Max Rad.Level-1000T NVT;Post Rad.BV-75V,VF-1 3V;IR-.15uA,trr-4ns,Ct-2pf.
55	1N5428	9	Si	DO7	Max.Rad Level-300T NVT;Post Rad.BV-200V,VF-1 3V,IR-.15uA,trr-50ns,Ct-5pf.
56	1N5429	9	Si	DO7	Max Rad.Level-300T NVT;Post Rad BV-200V,VF-1 5V,IR-50nA,Ct-6.0pf.
57	1N5430	9	Si	DO7	Max.Rad.Level-1000T NVT;Post Rad.BV-75V,VF-1.05V IR-.15uA,trr-4ns,Ct-2 5pf
58	1N5431	9	Si	DO35	Max Rad Level-1000T NVT;Post Rad.BV-80V,VF-1 35V,IR- 15uA,trr-4ns,Ct-2 5pf.
59	1N5432	9	Si	DO7	Max.Rad Level-1000T NVT;Post Rad.BV-20V,VF-1 35V,IR-60nA,trr- 75ns,Ct-1 0pf.
60	FDR300	9	Si#	DO7	WIV-250V,IO-300mA;Pd-500mW;VF- 85V at 100mA;IR-.10uA;Rad.Threshold-500T NVT.
61	FDR600	9	Si#	DO7	BV-75V;ID- 20A,Pd-.50W;VF-1 0V at .20A;IR-.10uA;trr-4.0nS;Rad.Thresh-1000T NVT
62	FDR700	9	Si#	DO7	BV-30V;IO-50mA;Pd-.25W;VF-1.1V at 50mA,IR- 05uA;Rad Threshold-1000T NVT
63	GA100	9	Si#	C16n	VB 30V;IF 200mA;Surge current 5.0A;IH 700uA;tr 50ns;td 20ns.
64	GA101	9	Si#	C16n	VB 60V;IF 200mA;Surge current 5.0A;IH 700uA;tr 50ns;td 20ns
65	GA102	9	Si#	C16n	VB 80V;IF 200mA;Surge current 5.0A;IH 700uA;tr 50ns;td 20ns.
66	GB100	9	Si#	TO59	VB 30V;IF 6 0A;Surge current 30A;IH700uA;tr 50ns;td 20ns.
67	GB101	9	Si#	TO59	VB 60V;IF 6.0A;Surge current 30A;IH 700uA;tr 50ns;td 20ns.
68	GB102	9	Si#	TO59	VB 80V;IF 6 0A;Surge current 30A;IH 700uA;tr 50ns;td 20ns.
69	UR105	9	Si	A146f	Max.Rad.Lev. at Imax for Neut.-200T NVT;for electron at 3MEV-10000T E/sq cm
70	UR110	9	Si	A146f	Max Rad.Lev. at Imax for Neut-200T NVT;for electron at 3MEV-10000T E/sq.cm.
71	UR115	9	Si	A146f	Max.Rad.Lev. at Imax for Neut.-200T NVT,for electron at 3MEV-10000T E/sq cm.
72	UR120	9	Si	A146f	Max Rad.Lev. at Imax for Neut-200T NVT,for electron at 3MEV-10000T E/sq.cm
73	UR125	9	Si	A24	Max Rad.Lev at Imax for Neut.-200T NVT;for electron at 3MEV-10000T E/sq.cm
74	UR205	9	Si	A146f	Max.Rad Lev at Imax for Neut.-200T NVT;for electron at 3MEV-10000T E/sq.cm
75	UR210	9	Si	A146f	Max.Rad.Lev. at Imax for Neut-200T NVT;for electron at 3MEV-10000T E/sq cm.
76	UR215	9	Si	A146f	Max Rad.Lev. at Imax for Neut-200T NVT;for electron at 3MEV-10000T E/sq.cm
77	UR220	9	Si	A146f	Max Rad Lev at Imax for Neut.-200T NVT for electron at 3MEV-10000T E/sq.CM
78	UR225	9	Si	A24	Max Rad.Lev at Imax for Neut.-200T NVT,for electron at 3MEV-10000T E/sq cm.
79	UR710	9	Si	A146f	Low leakage rad. tolerant diode;PIV 100V;500nA leakage;trr 50ns max at If 10mA,Ir 5 0mA.
80	UR720	9	Si	A146f	Low leakage rad. tolerant diode;PIV 200V;500nA leakage;trr 50ns max at If 10mA,Ir 5.0mA.
81	1N5165	10	Si	A1ac	Pt-125mW,Burnout-5.0Ergs;VF-1.0V at If-50mA;BV-30V;IR-300nA;Co-1.0pf.
82	1N5166	10	Si	A1ac	Pt-125mW,Burnout-5.0Ergs;VF-1.0V at If-35mA;BV-30V;IR-300nA;Co-1 0pf.
83	1N5167	10	Si	A1ac	Pt-125mW;Burnout-5 0Ergs;VF-1.0V at If-35mA;BV-20V;IR-500nA,Co-1.0pf.
84	1N5168	10	Si	A1ac	CW Power-200mW;Burnout-15Ergs,VF-1.0V at IF-75mA;NF-6.5db;VSWR-1.3.
85	1N5169	10	Si	A1ac	CW Power-200mW;Burnout-15Ergs;VF-1 0V at IF-75mA;NF-7.0db;VSWR-1.5.
86	1N5321	10	Si	A1ac	Pt-125mW,Burnout-20Ergs;VF-1.0V at If-50mA;BV-30V;IR-300nA;Co-1.0pf
87	1N5322	10	Si	A1ac	Pt-125mW;Burnout-20Ergs;VF-1.0V at If-35mA,BV-30V;IR-300nA;Co-1.0pf
88	1N5323	10	Si	A1ac	Pt-125mW;Burnout-20Ergs;VF-1 0V at If-35mA;BV-20V;IR-500nA;Co-1 0pf
89▼	A2S301	10		A1th	VBR 30Vmin;Total Cap 1.0pfmax;VF 460mVmax;IF 50mAmin;IR100nAmax.
90▼	A2S312	10		A1th	VBR 30Vmin;Total Cap 800ffmax;VF 460mVmax;IF30mAmin;IR100nAmax
91▼	A2S313	10		A1th	VBR 15Vmin;Total Cap 1.2pfmax;VF460mVmax,IF20mAmin;IF100nAmax.
92▼#	BA191	10	Si	M501	VR 20Vmax;IFM 50mA;VF 1 1V at IF 30mA;IR 200nA;Ct 1 2pf.
93▼#	BAW69	10	Si♦	M520b	X-Band diode for mixer;Conversion loss 5dB;Noise Figure 7dB.
94▼#	BAW70	10	Si♦	F27ak	X-Band diode for mixer,Conversion loss 4.5dB;Noise Figure 6.5dB.
95	D5600	10	Si$	M577△	Beam lead;Freq 16000MHz,NF 8.5db max;Cj .050pf -.300pf at 0.0V;Rs 25Ω max.
96	D5600A	10	Si$	M577△	Beam lead;Freq. 16000MHz;NF 7.5db max;Cj 050pf -.300pf at 0 0V;Rs 16Ω max.
97	D5817	10	Si$	M577△	Beam lead;Freq 3060MHz,NF 7.0db max;Cj .300pf -.700pf at 0.0V;Rs 1.0Ω max.
98	D5817A	10	Si$	M577△	Beam lead;Freq. 3060MHz;NF 6 0db max,Cj .300pf -.700pf at 0.0V;Rs 7 0Ω max.
99	D5818	10	Si$	M577△	Beam lead,Freq. 9375MHz,NF 7 5db max;Cj 100pf -.350pf at 0.0V;Rs 18Ω max.
100	D5818A	10	Si$	M577△	Beam lead;Freq. 9375MHz;NF 6 5db max;Cj 100pf -.350pf at 0 0V;Rs 12Ω max
101	D5819	10	Si$	M579△	Beam lead;Freq. 9375MHz;NF 7.5db max,Cj 100pf -.350pf at 0 0V;Rs 18Ω max
102	D5827	10	Si$	M491b△	Beam lead,Freq. 9375MHz;NF 7.5db max;Cj 100pf -.350pf at 0 0V;Rs 18Ω max
103	D5827A	10	Si$	M491b△	Beam lead,Freq. 9375MHz;NF 6.5db max;Cj .100pf -.350pf at 0 0V;Rs 12Ω max
104	D5828	10	Si$	M491d△	Beam lead;Freq 9375MHz;NF 7 5db max;Cj 100pf -.350pf at 0 0V;Rs 18Ω max
105	D5828A	10	Si$	M491d△	Beam lead,Freq. 9375MHz;NF 6 5db max,Cj 100pf -.350pf at 0.0V;Rs 12Ω max
106	D5829	10	Si$	M491e△	Beam lead;Freq 9375MHz;NF 7.5db max;Cj 100pf -.350pf at 0.0V;Rs 18Ω max
107	D5829A	10	Si$	M491e△	Beam lead;Freq 9375MHz;NF 6 5db max;Cj .100pf -.350pf at 0 0V;Rs 12Ω max.
108	D5835	10	Si$	M579△	Beam lead;Freq 3060MHz,NF 7 0db max;Cj .300pf - 700pf at 0 0V;Rs 10Ω max
109	D5841	10	Si$	M578△	Beam lead;Freq 3060MHz;NF 7 0db max,Cj 300pf - 700pf at 0.0V;Rs 10Ω max
110	D5841A	10	Si$	M578△	Beam lead;Freq. 3060MHz,NF 6.0db max,Cj 300pf - 700pf at 0.0V;Rs 7.0Ω max

SYMBOLS AND CODES EXPLAINED IN INTERPRETER

12. MISCELLANEOUS DIODES

IN ORDER OF (1) USE and (2) TYPE No.

LINE No.	2 TYPE No.	1 USE	DESCRIPTION MAT.	DWG. No.	TECHNICAL DATA
1	D5842	10	Si$	M578aΔ	Beam lead;Freq 3060MHz,NF 7.0db max;Cj 300pf - 700pf at 0 0V;Rs 10Ω max
2	D5843	10	Si$	M578bΔ	Beam lead;Freq 3060MHz;NF 7 0db max;Cj 300pf - 700pf at 0.0V;Rs 10Ω max
3	D5844	10	Si$	M578cΔ	Beam lead,Freq 3060MHz;NF 7 0db max,Cj 300pf - 700pf at 0.0V;Rs 10Ω max.
4	D5845	10	Si$	M491bΔ	Beam lead,Freq 3060MHz,NF 7.0db max;Cj 300pf - 700pf at 0.0V;Rs 10Ω max
5	D5845A	10	Si$	M491bΔ	Beam lead,Freq 3060MHz,NF 6.0db max;Cj 300pf -.700pf at 0 0V;Rs 7 0Ω max
6	D5846	10	Si$	M491cΔ	Beam lead,Freq. 3060MHz,NF 7.0db max,Cj .300pf - 700pf at 0 0V;Rs 10Ω max.
7	D5847	10	Si$	M491eΔ	Beam lead;Freq 3060MHz;NF 7.0db max,Cj .300pf - 700pf at 0 0V,Rs 10Ω max.
8	D5847A	10	Si$	M491eΔ	Beam lead,Freq. 3060MHz,NF 6.0db max;Cj 300pf -.700pf at 0 0V;Rs 7.0Ω max.
9	D5848	10	Si$	M491fΔ	Beam lead;Freq 3060MHz;NF 7 0db max,Cj .300pf -.700pf at 0.0V;Rs 10Ω max.
10	D5848A	10	Si$	M491fΔ	Beam lead;Freq 3060MHz;NF 6 0db max;Cj 300pf - 700pf at 0 0V;Rs 7 0Ω max.
11	DSH6172	10	Si$	A1ak	VB 20V min;Ct 1.2pf max;Carrier Lifetime 100ps max;VF 400mV max.
12	DSH6173	10	Si$	A1ak	VB 30V min,Ct 1 0pf max,Carrier Lifetime 100ps max,VF 500mV max
13	FH1100	10	%	DO7	Pd- 10W,VF-.55V at 10mA;IR-50nA;BV-5V;Ct-1 0pf,NF-10db;Qs-1 6pC
14	HP5082-2740	10	#$	M525	VBR at IR 10uA 3 0Vmin;VF at IF 30mA 1.0V max; Cap. 300ff max;NF6.5db.
15	HP5082-2750	10	#$	M277b	VBR 6.0V;Signal Sens. at 375kHz BW 58.5dBm min;Voltage Sens 5 0mV/uWmin.
16	HP5082-2751	10	#$	F83	VBR 6.0V;Signal Sens at 375kHz BW 58.5dBm min;Voltage Sens. 5.0mV/uW min
17	HP5082-2752	10	#$	F83	VBR 6.0V,Signal Sens at 375 kHz BW 55 5dBm min,Voltage Sens 3 5mV/uWmin
18	HP5082-2755	10	#$	A1n	VBR 6.0V,Signal Sens at 375 kHz BW 58.5 dBm min,Voltage Sens 5.0mV/uWmin
19	HP5082-2758	10	#$	M277b	VBR 6 0V;Signal Sens at 375kHz BW 55.5dBm min,Voltage Sens 3.5mV/uWmin.
20	HP5082-2759	10	#$	A1n	VBR 6 0V,Signal Sens at 375kHz BW 55.5dBm min;Voltage Sens 3 5mV/uW min.
21	HP5082-2800	10	#$	A1nΔ	VBR 70V min;Vf 410mV max;Ir 200nA max;Cap 2 0pf max;Carrier Lifetime 100ps max
22	HP5082-2810	10	#$	A1n	VBR 20V min;Vf 410mV max;Ir 100nA max;Cap 1.2pf max,Carrier Lifetime 100ps max
23	HP5082-2811	10	#$	A1n	VBR 15V min;Vf 410mV max;Ir 100nA max;Cap 1 2pf max;Carrier Lifetime 100ps max
24	HP5082-2824	10	Si#$	A1nΔ	Pd 1.0W,Signal Sens 58dBm;Volt Sens. 8.5mV/uW;Outp Res 1 3kΩ
25	HP5082-2833	10	#$	A1n	VBR 10V min;Vf 410mV max;Ir 100nA max;Cap 1.3pf max;Carrier Lifetime 100ps max
26	MA4850	10	Si	A1ad	Broad Band Mixer;f-3060Mc;Zif at 1.0mW-125-250 ohms,Ct-1 0pf;NF-9.0db.
27	MA4851	10	Si	A1ad	Broad Band Mixer;f-3060Mc;Zif at 1.0mW-125-250 ohms;Ct- 70pf;NF-7 5db.
28	MA4852	10	Si	A1ad	Broad Band Mixer;f-3060Mc,Zif at 1 0mW-125-250 ohms,Ct-.50pf,NF-6.5db.
29	MA4853	10	Si	A1ad	Broad Band Mixer,f-3060Mc;Zif at 1.0mW-125-250 ohms;Ct- 50pf,NF-5 5db.
30	MA4854	10	Si	A1ad	Broad Band Mixer;f-3060Mc;Zif at 1.0mW-125-250 ohms;Ct- 50pf;NF-5.0db
31	MA4855	10	Si	A1ad	Broad Band Mixer,f-9375Mc;Zif at 1.0mW-125-250 ohms;Ct- 50pf;NF-8.5db
32	MA4856	10	Si	A1ad	Broad Band Mixer,f-9375Mc;Zif at 1 0mW-125-250 ohms,Ct- 40pf;NF-7 5db
33	MA4857	10	Si	A1ad	Broad Band Mixer;f-9375Mc;Zif at 1 0mW-125-250 ohms;Ct- 40pf,NF-7 0db
34	MA4878	10	Si	A1ad	Pd-50mW;Ct-1.0pf max;VF-.55V max. at If-20mA
35	MA4882	10	Si	A1ad	Mixer,BV-4 0V min,If-1.0mA min at VF- 40V;NF-6 5db max
36	MA4883	10	Si	A1ad	Mixer,BV-4 0V min;If-1 0mA min at VF- 40V;NF-7 5db max.
37	MBD501	10	Si	C103	Hot carrier diode;Vr 50V,Pd 500mW;Cap 1 0pF max;Ir 200nA max;Carrier Lifet 15ps
38	MBD701	10	Si	C103	Hot carrier diode;Vr 70V,Pd 500mW;Cap 1.0pF max,Ir 200nA max;Carrier Lifet. 15ps
39	MS114	10	Si		IF-10mA at VF-1.0V,Ct-.80pf;PIV-10V at 10uA,Rs-35 ohms,Platinum Junction.
40	MS124	10	Si		IF-50mA at VF-1.0V,Ct- 80pf,PIV-10V at 10uA,Rs-10 ohms;Platinum Junction
41	MS134	10	Si		IF-100mA at VF-1 0V,Ct- 80pf,PIV-10V at 10uA,Rs-3 5 ohms,Platinum Junction
42	MS214	10	Si		IF-10mA at VF-1.0V,Ct- 80pf,PIV-20V at 10uA;Rs-35 ohms;Platinum Junction.
43	MS224Ø	10	Si		IF-50mA at VF-1 0V,Ct- 80pf,PIV-20V at 10uA;Rs-10 ohms,Platinum Junction.
44	MS314	10	Si		IF-10mA at VF-1 0V,Ct- 80pf;PIV-30V at 10uA;Rs-35 ohms;Platinum Junction.
45	MS324	10	Si		IF-50mA at VF-1 0V,Ct- 80pf;PIV-30V at 10uA;Rs-10 ohms;Platinum Junction.
46	MS334	10	Si		IF-100mA at VF-1 0V;Ct-.80pf;PIV-30V at 10uA;Rs-3.5 ohms;Platinum Junction.
47	MS514	10	Si		IF-10mA at VF-1.0V,Ct-.80pf;PIV-50V at 10uA;Rs-35 ohms;Platinum Junction.
48	MS524	10	Si		IF-50mA at VF-1.0V;Ct-.80pf;PIV-50V at 10uA;Rs-10 ohms;Platinum Junction.
49	MSJ112	10	Si		IF-10mA at VF-1.0V;Ct- 80pf,PIV-5 0V at 10uA,Rs-50 ohms;Copper Junction
50	MSJ114	10	Si		IF-10mA at VF-1 0V,Ct- 80pf,PIV-5 0V at 10uA,Rs-35 ohms,Platinum Junction.
51	1N5283	11	Si	DO7	Pd- 6W,VF-100V max,Ireg- 22mA at V-25V;Vlim-1.0V max at Ilim- 72lp
52	1N5284	11	Si	DO7	Pd-.6W;VF-100V max,Ireg- 24mA at V-25V,Vlim-1.0V max at Ilim- 72lp.
53	1N5285	11	Si	DO7	Pd-.6W,VF-100V max;Ireg-.27mA at V-25V;Vlim-1.0V max at Ilim- 72lp
54	1N5286	11	Si	DO7	Pd- 6W,VF-100V max;Ireg- 30mA at V-25V,Vlim-1 0V max at Ilim- 72lp
55	1N5287	11	Si	DO7	Pd-.6W;VF-100V max,Ireg- 33mA at V-25V;Vlim-1.0V max at Ilim- 72lp
56	1N5288	11	Si	DO7	Pd-.6W;VF-100V max;Ireg- 39mA at V-25V;Vlim-1.05V max at Ilim- 72lp
57	1N5289	11	Si	DO7	Pd-.6W,VF-100V max,Ireg-.43mA at V-25V;Vlim-1.05V max at Ilim-.72lp.
58	1N5290	11	Si	DO7	Pd-.6W,VF-100V max;Ireg- 47mA at V-25V;Vlim-1.05V max at Ilim- 72lp.
59	1N5291	11	Si	DO7	Pd- 6W,VF-100V max,Ireg- 56mA at V-25V;Vlim-1.1V max at Ilim- 72lp
60	1N5292	11	Si	DO7	Pd-.6W,VF-100V max;Ireg-.62mA at V-25V;Vlim-1.13V max at Ilim-.72lp
61	1N5293	11	Si	DO7	Pd-.6W,VF-100V max,Ireg-.68mA at V-25V;Vlim-1 15V max at Ilim- 72lp.
62	1N5294	11	Si	DO7	Pd-.6W;VF-100V max,Ireg- 75mA at V-25V;Vlim-1.2V max at Ilim-.72lp
63	1N5295	11	Si	DO7	Pd-.6W;VF-100V max,Ireg- 82mA at V-25V;Vlim-1.25V max at Ilim-.72lp.
64	1N5296	11	Si	DO7	Pd-.6W,VF-100V max,Ireg- 91mA at V-25V;Vlim-1.29V max at Ilim- 72lp.
65	1N5297	11	Si	DO7	Pd-.6W,VF-100V max,Ireg-1 0mA at V-25V;Vlim-1.35V max at Ilim- 72lp.
66	1N5298	11	Si	DO7	Pd- 6W;VF-100V max;Ireg-1 1mA at V-25V;Vlim-1 4V max at Ilim- 72lp
67	1N5299	11	Si	DO7	Pd-.6W,VF-100V max;Ireg-1.2mA at V-25V,Vlim-1 45V max at Ilim-.72lp
68	1N5300	11	Si	DO7	Pd-.6W,VF-100V max,Ireg-1.3mA at V-25V,Vlim-1 5V max at Ilim- 72lp
69	1N5301	11	Si	DO7	Pd-.6W;VF-100V max;Ireg-1.4mA at V-25V;Vlim-1.55V max at Ilim-.72lp
70	1N5302	11	Si	DO7	Pd-.6W;VF-100V max;Ireg-1.5mA at V-25V;Vlim-1 6V max at Ilim- 72lp
71	1N5303	11	Si	DO7	Pd-.6W;VF-100V max;Ireg-1 6mA at V-25V;Vlim-1.65V max at Ilim- 72lp
72	1N5304	11	Si	DO7	Pd-.6W,VF-100V max;Ireg-1 8mA at V-25V,Vlim-1 75V max at Ilim- 72lp
73	1N5305	11	Si	DO7	Pd- 6W,VF-100V max;Ireg-2.0mA at V-25V,Vlim-1 85V max at Ilim- 72lp
74	1N5306	11	Si	DO7	Pd-.6W,VF-100V max,Ireg-2 2mA at V-25V;Vlim-1.95V max at Ilim- 72lp
75	1N5307	11	Si	DO7	Pd-.6W,VF-100V max,Ireg-2 4mA at V-25V;Vlim-2 0V max at Ilim- 72lp
76	1N5308	11	Si	DO7	Pd-.6W,VF-100V max,Ireg-2 7mA at V-25V;Vlim-2.15V max at Ilim-.72lp
77	1N5309	11	Si	DO7	Pd-.6W,VF-100V max;Ireg-3 0mA at V-25V,Vlim-2 25V max at Ilim-.72lp.
78	1N5310	11	Si	DO7	Pd-.6W,VF-100V max;Ireg-3.3mA at V-25V,Vlim-2.35V max at Ilim-.72lp
79	1N5311	11	Si	DO7	Pd-.6W,VF-100V max;Ireg-3.6mA at V-25V;Vlim-2 5V max at Ilim-.72lp
80	1N5312	11	Si	DO7	Pd-.6W;VF-100V max,Ireg-3 9mA at V-25V;Vlim-2 6V max at Ilim- 72lp
81	1N5313	11	Si	DO7	Pd-.6W;VF-100V max,Ireg-4 3mA at V-25V;Vlim-2.75V max at Ilim- 72lp.
82	1N5314	11	Si	DO7	Pd- 6W;VF-100V max;Ireg-4.7mA at V-25V,Vlim-2.9V max at Ilim- 72lp
83	CL1020	11	Si	C29	BVDS-60V max,ID-1 0mA,Pd- 25W;Vlim-1 8V;Knee impedance-120Kohms
84	CL1520	11	Si	C29	BVDS-60V max,ID-1.5mA,Pd- 25W;Vlim-2 1V;Knee impedance-80Kohms
85	CL2210	11	Si	C29	BVDS-60V max,ID- 22mA;Pd- 25W;Vlim-1.0V;Knee impedance-1.0Mohms
86	CL2220	11	Si	C29	BVDS-60V max;ID-2 2mA,Pd- 25W;Vlim-2.5V;Knee impedance-50Kohms
87	CL3310	11	Si	C29	BVDS-60V max;ID- 22mA;Pd-.25W;Vlim-1.1V;Knee impedance-600Kohms.
88	CL3320	11	Si	C29	BVDS-60V max;ID-2 2mA;Pd- 25W;Vlim-3 0V;Knee impedance-25Kohms.
89	CL4710	11	Si	C29	BVDS-60V max;ID- 47mA;Pd- 25W;Vlim-1 3V;Knee impedance-400Kohms
90	CL4720	11	Si	C29	BVDS-60V max,ID-4 7mA;Pd- 25W;Vlim-3 5V;Knee impedance-15Kohms
91	CL6810	11	Si	C29	BVDS-60V max;ID- 68mA,Pd- 25W;Vlim-1.5V;Knee impedance-250Kohms
92#	BAW21	12	SiΔ	DO7	VBR-90V-150V;IF-150mA max;IR-.10uA max at 70V.
93	S1V1D	12	Se	M204n	AC Coil V-26V max,AC Coil I-.20A max;DC Coil V-22V max,DC Coil I- 25A max.
94	S1V1P	12	Se	M204p	AC Coil V-26V max,AC Coil I-.40A max;DC Coil V-22V max;DC Coil I-.60A max
95	S1W1P	12	Se	M204x	AC Coil V-26V max;AC Coil I-1.2A max;DC Coil V-22V max;DC Coil I-2 0A max
96	S1X1P	12	Se	M204v	AC Coil V-26V max,AC Coil I-.90A max,DC Coil V-22V max;DC Coil I-1 4A max
97	S1Y1D	12	Se	M204n	AC Coil V-26V max;AC Coil I-.40A max;DC Coil V-22V max;DC Coil I- 60A max
98	S1Y1P	12	Se	M204r	AC Coil V-26V max;AC Coil I-.40A max;DC Coil V-22V max,DC Coil I- 60A max
99	S1Z1P	12	Se	M204t	AC Coil V-26V max,AC Coil I-.60A max;DC Coil V-22V max,DC Coil I-.90A max
100	S2V1D	12	Se	M204k	DC Coil V-44V max,DC Coil I-.25A max
101	S2V1P	12	Se	M204p	DC Coil V-44V max,DC Coil I-.60A max.
102	S2V2D	12	Se	M204n	AC Coil V-52V max;AC Coil I- 20A max
103	S2V2P	12	Se	M204p	AC Coil V-52V max,AC Coil I-.20A max.
104	S2W1P	12	Se	M204x	DC Coil V-44V max,DC Coil I-2.0A max
105	S2W2P	12	Se	M204x	AC Coil V-52V max;AC Coil I-1 2A max
106	S2X1P	12	Se	M204v	DC Coil V-44V max;DC Coil I-1 4A max
107	S2X2P	12	Se	M204v	AC Coil V-52V max;AC Coil I- 90A max
108	S2Y1D	12	Se	M204n	DC Coil V-44V max;DC Coil I- 60A max
109	S2Y1P	12	Se	M204r	DC Coil V-52V max,DC Coil I- 20A max
110	S2Y2P	12	Se	M204r	AC Coil V-52V max;AC Coil I- 40A max

12. MISCELLANEOUS DIODES

IN ORDER OF (1) USE and (2) TYPE No.

LINE No.	2 TYPE No.	1 USE	DESCRIPTION MAT.	DWG. No.	TECHNICAL DATA
1	S2Z1P	12	Se	M204t	DC Coil V-44V max,DC Coil I-.90A max
2	S2Z2P	12	Se	M204t	AC Coil V-52V max;AC Coil I-.60A max
3	S3V1D	12	Se	M204m	DC Coil V-66V max,DC Coil I-.25A max
4	S3V2P	12	Se	M204p	DC Coil V-66V max,DC Coil I- 25A max
5	S3V3P	12	Se	M204p	AC Coil V-78V max;AC Coil I-.20A max
6	S3W2P	12	Se	M204x	DC Coil V-66V max;DC Coil I-2.0A max
7	S3W3P	12	Se	M204x	AC Coil V-78V max,AC Coil I-1.2A max.
8	S3X2P	12	Se	M204v	DC Coil V-66V max;DC Coil I-1.4A max.
9	S3X3P	12	Se	M204v	AC Coil V-78V max;AC Coil I-.90A max.
10	S3Y2P	12	Se	M204r	DC Coil V-66V max,DC Coil I-.60A max
11	S3Y3P	12	Se	M204r	AC Coil V-78V max;AC Coil I-.40A max.
12	S3Z2P	12	Se	M204t	DC Coil V-66V max;DC Coil I-.90A max
13	S3Z3P	12	Se	M204t	AC Coil V-78V max;AC Coil I-.60A max.
14	S4V2P	12	Se	M204p	DC Coil V-88V max,DC Coil I-.25A max
15	S4V4P	12	Se	M204p	AC Coil V-104V max;AC Coil I-.20A max
16	S4W2P	12	Se	M204x	DC Coil V-88V max;DC Coil I-2.0A max.
17	S4W4P	12	Se	M204x	AC Coil V-104V max,AC Coil I-1.2A max
18	S4X2P	12	Se	M204v	DC Coil V-88V max;DC Coil I-1.4A max
19	S4X4P	12	Se	M204v	AC Coil V-104V max;AC Coil I-.90A max.
20	S4Y2P	12	Se	M204r	DC Coil V-88V max,DC Coil I-.60A max
21	S4Y4P	12	Se	M204r	AC Coil V-104V max;AC Coil I-.40A max.
22	S4Z2P	12	Se	M204t	DC Coil V-88V max;DC Coil I-.90A max
23	S4Z4P	12	Se	M204t	AC Coil V-104V max;AC Coil I-.60A max.
24	S5V2P	12	Se	M204p	DC Coil V-110V max;DC Coil I-.25A max.
25	S5V5P	12	Se	M204p	AC Coil V-130V max;AC Coil I- 20A max.
26	S5W2P	12	Se	M204x	DC Coil V-110V max;DC Coil I-2 0A max.
27	S5W5P	12	Se	M204x	AC Coil V-130V max;AC Coil I-1 2A max
28	S5X2P	12	Se	M204v	DC Coil V-110V max;DC Coil I-1.4A max.
29	S5X5P	12	Se	M204v	AC Coil V-130V max;AC Coil I-.90A max
30	S5Y2P	12	Se	M204r	DC Coil V-110V max;DC Coil I-.60A max
31	S5Y5P	12	Se	M204r	AC Coil V-130V max;AC Coil I-.40A max.
32	S5Z2P	12	Se	M204t	DC Coil V-110V max;DC Coil I-.90A max.
33	S5Z5P	12	Se	M204t	AC Coil V-130V max;AC Coil I- 60A max.
34	S6V2P	12	Se	M204p	DC Coil V-132V max,DC Coil I-.25A max.
35	S6V6P	12	Se	M204q	AC Coil V-156V max;AC Coil I-.20A max.
36	S6W2P	12	Se	M204x	DC Coil V-132V max;DC Coil I-2.0A max.
37	S6W6P	12	Se	M204y	AC Coil V-156V max;AC Coil I-1.2A max.
38	S6X2P	12	Se	M204v	DC Coil V-132V max;DC Coil I-1.4A max.
39	S6X6P	12	Se	M204w	AC Coil V-156V max;AC Coil I-.90A max
40	S6Y2P	12	Se	M204r	DC Coil V-132V max;DC Coil I-.60A max.
41	S6Y6P	12	Se	M204s	AC Coil V-156V max;AC Coil I-.40A max.
42	S6Z2P	12	Se	M204t	DC Coil V-132V max;DC Coil I-.90A max.
43	S6Z6P	12	Se	M204u	AC Coil V-156V max;AC Coil I-.60A max.
44	S7V2P	12	Se	M204p	DC Coil V-154V max;DC Coil I-.25A max.
45	S7W2P	12	Se	M204x	DC Coil V-154V max;DC Coil I-2.0A max.
46	S7X2P	12	Se	M204v	DC Coil V-154V max;DC Coil I-1 4A max.
47	S7Y2P	12	Se	M204v	DC Coil V-154V max;DC Coil I-.60A max.
48	S7Z2P	12	Se	M204t	DC Coil V-154V max;DC Coil I-.90A max.
49	1N5555	13		DO13	Voltage Transient-Suppressor;PP-1 5kW,Pd-1.0W;VR-30.5V;Ipp-32A;IR at VR-5 0uA.
50	1N5556	13		DO13	Voltage Transient-Suppressor;PP-1 5kW,Pd-1 0W;VR-40.3V;Ipp-24A;IR at VR-5 0uA.
51	1N5557	13		DO13	Voltage Transient-Suppressor;PP-1.5kW,Pd-1 0W;VR-49V;Ipp-19A,IR at VR-5.0uA.
52	1N5558	13		DO13	Voltage Transient-Suppressor;PP-1.5kW,Pd-1.0W;VR-175V,Ipp-5.7A;IR at VR-5.0uA.
53	1N5610	13		A1dy	VZ(min#33V;IZT 1.0mA;VR30.5V;IR5.0uA;IS32A;VZ(max)47.5V.
54	1N5611	13		A1dy	VZ(min)43.7V;IZT 1.0mA;VR40.3V;IR5.0uA;IS24A;VZ(max)63 5V.
55	1N5612	13		A1dy	VZ(min)54V;IZT 1.0mA;VR49V;IR5.0uA;IS19A;VZ(max)78 5V.
56	1N5613	13		A1dy	VZ(min)191V;IZT 1.0mA;VR175V,IR5.0uA;IS5.7A;VZ(max)265V.
57	704-34	13	Si	DO13	Vrso 29V;Vclamp 51V;Iso(leakage)5.0uA;Pd(peak)1.5kW;If surge 100A at 8.0msec.
58	704-34A	13	Si	DO13	Vrso 29V;Vclamp 47V;Iso(leakage)5.0uA;Pd(peak)1.5kW;If surge 100A at 8.0msec
59	704-34B	13	Si	DO13	Vrso 29V;Vclamp 44V;Iso(leakage)5.0uA;Pd(peak)1.5kW;If surge 100A at 8.0msec.
60#	CL8360	14		S302	Gunn Effect Device;Freq 8.5GHz VCC7.0Vmax;Icc120mA.
61#	CL8370	14		S302a	Gunn Effect Device;freq 9.5GHz; Vcc 7.0V;Icc120mA.
62#	CL8380	14		S302b	Gunn Effect Device;freq 10.5GHz; Vcc 7.0V;Icc 120mA
63#	CL8390	14		S302b	Gunn Effect Device;freq 11.5GHz; Vcc 7.0V;Icc 120mA.
64#	CL8420	14		M483	Gunn Effect Device;freq 9.35GHz;Vcc8.0Vmax;Icc200mA
65#	CXY11A	14	GA	F27h	Gunn Effect Device;X band Po 5.0mW;Ptot 1.0W;freq8.0-12GHz.
66#	CXY11B	14	GA	F27h	Gunn Effect Device;X band Po 10mW;Ptot 1.0W;freq8.0-12GHz.
67#	CXY11C	14	GA	F27h	Gunn Effect Device;X band Po 15mW;Ptot 1 0W;freq8.0-12GHz.
68#	CXY11D	14	GA	F27h	Gunn Effect Device;X band Po 20mW;Ptot 1 0W;freq8.0-12GHz.
69#	CXY11E	14	GA	F27h	Gunn Effect Device;X band Po 30mW;Ptot 1 0W;freq8.0-12GHz.
70#	CXY14A	14	GA	F27h	Gunn Effect Device; J Band; PO 5.0mW; Ptot 1.0W; freq. 12-18GHz.
71#	CXY14B	14	GA	F27h	Gunn Effect Device; J Band; PO 10mW; Ptot 1.0W; freq. 12-18GHz
72#	CXY14C	14	GA	F27h	Gunn Effect Device; J Band; PO 15mW; Ptot 1.0W; freq. 12-18GHz.
73▼	D5784	14	Si§§		Avalanche;X Freq Band;Power Out 10mWmin;Operating V 70-90V;Oper.Current15-30mA,Eff 3%.
74▼	D5784A	14	Si§§		Avalanche;X Freq.Band;Power Out 25mWmin;Operating V 70-90V;Oper.current 15-30mA;Eff.3%
75▼	D5784B	14	Si§§		Avalanche;X Freq.Band;Power Out 50mWmin;Operating V 70-90V;Oper.Current 15-30mA;Eff.3%
76	D5968	14	Si§	F27g§	Avalanche;Freq 8.2 to 12.4GHz;Ct 500fF;Efficiency 3.0%;Power Out 100mW
77	D5968A	14	Si§	F27g§	Avalanche;Freq 8.2 to 12.4GHz;Ct 500fF;Efficiency 4 0%;Power Out 200mW
78	D5968B	14	Si§	F27g§	Avalanche;Freq. 8.2 to 12 4GHz;Ct 500fF;Efficiency 4.0%;Power Out 250mW.
79	D5968C	14	Si§	F27g§	Avalanche;Freq. 8.2 to 12 4GHz;Ct 500fF;Efficiency 5 0%;Power Out 300mW.
80	D5968D	14	Si§	F27g§	Avalanche;Freq. 8.2 to 12.4GHz;Ct 500fF;Efficiency 5 0%;Power Out 400mW.
81	D5968E	14	Si§	F27g§	Avalanche;Freq 8.2 to 12.4GHz;Ct 500fF;Efficiency 6 0%;Power Out 500mW.
82	D5968F	14	Si§	F27g§	Avalanche;Freq 8.2 to 12 4GHz;Ct 500fF;Efficiency 7.0%;Power Out 750mW.
83#	DC1100-01	14	Si	F27ac	X-Band Avalanche Diode· PO 30mWmax;80V at 75mA freq. 12 4GHz max.
84#	DC1100-03	14	Si	F27ac	X-Band Avalanche Diode; PO 30mW;80V at 75mA freq. 12 4GHz max.
85#	DC1100-05	14	Si	F27ac	X-Band Avalanche Diode; PO 50mW;80V at 75mA freq. 12.4GHz max.
86#	DC1100-10	14	Si	F27ac	X-Band Avalanche Diode, PO 100mW;80V at 75mA freq. 12.4GHz max.
87#	DC1100-20	14	Si	F27ac	X-Band Avalanche Diode; PO 200mW;80V at 75mA freq 12.4GHz max.
88#	DC1201A	14	GA	F27ac	X-Band Gunn Diode; PO 10mW, Vdc 7 0V at 145 mA,Freq 12GHz max.
89#	DC1201B	14	GA	F27ac	X-Band Gunn Diode; PO 15mW; Vdc 7 0V at 145 mA;Freq. 12GHz max.
90#	DC1201C	14	GA	F27ac	X-Band Gunn Diode; PO 20mW; Vdc 7 0V at 145mA;Freq. 12GHz max
91#	DC1201D	14	GA	F27ac	X-Band Gunn Diode, PO 30mW, Vdc 7.0V at 145mA;Freq 12GHz max
92#	DC1201E	14	GA	F27ac	X-Band Gunn Diode, PO 50mW; Vdc 7 0V at 145mA;Freq 12GHz max
93#	DC1201F	14	GA	F27ac	X-Band Gunn Diode; PO 100mW; Vdc 7.0V at 145mA;Freq. 12GHz max
94#	DC1202A	14	GA	F27ac	Ku-Band Gunn Diode; PO 10mW; Vdc 6 5V at 160mA,Freq 18GHz max
95#	DC1202B	14	GA	F27ac	Ku-Band Gunn Diode; PO 15mW, Vdc 6 5V at 160mA,Freq 18GHz max
96#	DC1202C	14	GA	F27ac	Ku-Band Gunn Diode; PO 20mW; Vdc 6 5V at 160mA,Freq. 18GHz max
97#	DC1202D	14	GA	F27ac	Ku-Band Gunn Diode, PO 30mW, Vdc 6.5V at 160mA;Freq 18GHz max
98	DGA6036	14	Si§§	F27g	Avalanche;Freq. 26 5 - 40 0GHz,Efficiency 2.0%,Power Out 30mW min;VR 50V max.
99	HP5082-0400	14	Si§§	F56j	Impatt Diode;VBR 78V;Po 500mW;Band 8-10GHz;Efficiency 5.8% min
100	HP5082-0401	14	Si§§	F56j	Impatt Diode,VBR 65V;Po 500mW;Band 10-12 4GHz;Efficiency 5.8% min
101	HP5082-0431	14	Si§§	F56j	Impatt Diode;Po 100mW;Frequency 5 0-9 0GHz;Efficiency 3.5%,Volt. 110V,Cap 150fF
102	HP5082-0432	14	Si§§	F56j	Impatt Diode;Po 100mW;Frequency 8.0-12GHz;Efficiency 3 5%;Volt 90V;Cap 200fF
103	HP5082-0433	14	Si§§	F56j	Impatt Diode;Po 100mW;Frequency 10-14GHz;Efficiency 3 5%;Volt. 75V;Cap 240fF
104	HP5082-0434	14	Si§§	S294	Impatt Diode;Po 100mW,Frequency 5.0-9.0GHz;Efficiency 3 5%;Volt 110V,Cap 150fF
105	HP5082-0435	14	Si§§	S294	Impatt Diode;Po 100mW;Frequency 8 0-12GHz;Efficiency 3.5%;Volt 90V;Cap 200fF.
106	HP5082-0436	14	Si§§	S294	Impatt Diode;Po 100mW;Frequency 10-14GHz;Efficiency 3.5%;Volt. 75V;Cap. 240fF.
107	HP5082-0437	14	Si§§	F27af	Impatt Diode,Po 100mW,Frequency 5.0-9 0GHz;Efficiency 3 5%;Volt. 110V;Cap 150fF
108	HP5082-0438	14	Si§§	F27af	Impatt Diode,Po 100mW;Frequency 8.0-12GHz;Efficiency 3 5%;Volt. 90V;Cap 200fF
109	HP5082-0439	14	Si§§	F27af	Impatt Diode,Po 100mW;Frequency 10-14GHz,Efficiency 3 5%,Volt. 75V,Cap 240fF
110	L8850	14	Si	F27ab	Avalanche oscillator diode; X BAND; RF power-10mw;Vop-100V typ

SYMBOLS AND CODES EXPLAINED IN INTERPRETER

12. MISCELLANEOUS DIODES

IN ORDER OF (1) USE and (2) TYPE No.

LINE No.	2 TYPE No.	1 USE	DESCRIPTION MAT.	DWG. No.	TECHNICAL DATA
1	L8851	14	SiΔ$	F27ab	Avalanche Oscillator Diode;XBand;Po 3.0mW,VB 35V;Junct Cap. 1 5pf
2	L8852	14	SiΔ$	F27ab	Avalanche Oscillator Diode;XBand;Po 10mW,VB 35V;Junct.Cap. 1.5pf
3	L8853	14	SiΔ$	F27ab	Avalanche Oscillator Diode,XBand;Po 20mW;VB 35V;Junct Cap. 1.5pf
4	L8860	14	Si	F27ab	Avalanche oscillator diode, C BAND;RF POWER-10mw,Vop 12ov typ
5	L8861	14	Si	F27ab	Avalanche oscillator diode; C BAND; RF Power-50 mw;Vop 12ov typ
6	L8862	14	Si	F27ab	Avalanche oscillator diode; C BAND, RF Power 100mw;Vop 12ov typ
7	L8870	14	Si	F27ab	Avalanche oscillator diode; Ku BAND;RF Power 10mw;Vop 75v typ.
8	L8871	14	Si	F27ab	Avalanche oscillator diode, Ku BAND;RF Power 50mw;Vop 75v typ.
9	L8872	14	Si	F27ab	Avalanche oscillatr diode; Ku BAND;RF Power 100mw;Vop 75v typ
10	MA4980	14	Si	S328	S-Band,Aval Oscill ;Freq 8.2-12.4GHz;PO 10mW;EFF 1.0% typ;Volt.70-100V typ;Cur.20mA typ
11	MA4984	14	Si	S328	S-Band,Aval.Oscill.,Freq. 8.2-12 4GHz;PO 250mW,EFF 4.5% typ;Volt 70-100V typ;Cur.90mA typ
12	MA4985	14	Si	S328	X-Band,Aval.Oscill.;Freq 12.4-18.0GHz,PO 100mW;EFF. 3.5% typ;Volt 45-75V typ;Cur 70mA typ
13	MA4986	14	Si	S328	S-Band,Aval Oscill ;Freq. 8 2-12.4GHz,PO 50mW;EFF 2 0% typ;Volt.70-100V typ;Cur 30mA typ
14	MA4987	14	Si	S328	S-Band,Aval.Oscill ;Freq 8 2-12.4GHz;PO 100mW,EFF. 3 5% typ;Volt.70-100V typ;Cur.50mA typ
15	MA4988	14	Si	S328	X-Band,Aval Oscill.;Freq. 12.4-18 0GHz;PO 10mW;EFF. 1.0% typ;Volt 45-75V typ;Cur 30mA typ.
16	MA4989	14	Si	S328	X-Band,Aval.Oscill.,Freq. 12 4-18.0GHz,PO 50mW,EFF. 2 0% typ;Volt 45-75V typ;Cur 55mA typ.
17	MA4992	14	Si	S328	Ku-Band,Aval Oscill ;Freq. 18.0-26 0GHz;PO 10mW;EFF 75% typ;Volt 30-50V typ;Cur 50mA typ
18	MA4998	14	Si	S328	Ku-Band,Aval Oscill.;Freq 18 0-26 0GHz;PO 50mW;EFF. 1.5% typ,Volt 30-50V typ;Cur 100mA typ
19	MA49010	14	Si	S328	S-Band,Aval.Oscill ;Freq 8 2-12 4GHz;PO 500mW;EFF 5 5% typ,Volt 70-100V typ;Cur 130mA typ
20	MA49012	14	Si	S328	S-Band,Aval Oscill ;Freq 8.2-12.4GHz;PO 750mW;EFF 6 0% typ;Volt 70-100V typ,Cur.140mA typ
21	MA49020	14	Si	S328	X-Band,Aval.Oscill ,Freq. 12 4-18.0GHz;PO 250mW;EFF 4 5% typ;Volt 45-75V typ,Cur.120mA typ
22	MA49021	14	Si	S328	X-Band,Aval.Oscill ;Freq. 12 4-18.0GHz,PO 500mW;EFF. 6.0% typ;Volt.45-75V typ,Cur.135mA typ
23	MA49030	14	Si	S328	Ku-Band,Aval Oscill.,Freq. 18.0-26.0GHz;PO 100mW,EFF 2.5% typ;Volt.30-50V typ;Cur.150mA typ
24	MA49040	14	Si	S328	Avalanche Oscillator, Freq,26-40GHz;PO 10mW,EFF 50% typ,Volt.20-35V typ,Cur 120mA typ
25	MA49041	14	Si	S328	Avalanche Oscillator, Freq;26-40GHz;PO 50mW;EFF 1 0% typ,Volt 20-35V typ,Cur.250mA typ
26	MA49104	14	GA	M465	Gunn Diode;Freq 3.0-12.4GHz,PO 10mW;Volt. 12Vdc max;Current 300mA max.
27	MA49105	14	GA	M465	Gunn Diode,Freq 8.0-12 4GHz;PO 25mW,Volt 12Vdc max,Current 400mA max
28	MA49106	14	GA	M465	Gunn Diode,Freq 8.0-12.4GHz;PO 50mW;Volt. 12Vdc max;Current 500mA max
29	MA49107	14	GA	M465	Gunn Diode,Freq 8.0-12.4GHz;PO 100mW;Volt. 12Vdc max;Current 900mA max.
30	MA49112	14	GA	F27a	Gunn Diode,Freq 8.0-12.4GHz;PO 10mW;Volt 12Vdc max,Current 300mA max.
31	MA49114	14	GA	F27a	Gunn Diode,Freq 8 0-12.4GHz;PO 50mW;Volt 12Vdc max;Current 500mA max
32#	MD0232	14	GA	F27ab	X Band Gunn Diode; 5.0mWmin,7.0Volt;130mA Operating
33#	MD0233	14	GA	F27ab	X-Band Gunn Diode,10 0mW min;7.0Volt;130mA Operating.
34#	MD0234	14	GA	F27ab	X-Band Gunn Diode,15 0mW min;7 0Volt;130mA Operating
35#	MD0235	14	GA	F27ab	X-Band Gunn Diode,20 0mW min;7 0Volt;130mA Operating.
36▼	MD632	14	Si	F27ag	Thermal Res 25°C/W,Oscillator Threshold Volt.250V;RF output Power 50-100W,Cap 8.0pf.
37	MS801X	14	GA	F27d	Avalanche,Min.Power Output(CW)10mW,Typ. Current-10 to 15mA;Typ.Volt-35 to 70V
38▼	MS802A	14	GA	F27d	Avalanche Diode,8 to 10GHz;Pout 20mW min CW
39▼	MS802B	14	GA	F27d	Avalanche Diode;10 to 12GHz;Pout 20mW min. CW
40	MS802X	14	GA	F27d	Avalanche,Min Power Output(CW)20mW;Typ. Current-10 to 15mA;Typ Volt-35 to 70V
41	MS803X	14	GA	F27d	Avalanche,Min power output (CW) 30mW;Typ current-10 to 15mA;typ volt -35 to 70V
42	MS804X	14	GA	F27d	Avalanche,Min power output (CW) 75mW;Typ. current-15 to 30mA;typ volt -35 to 70V
43▼	MS805A	14	GA	F27d	Avalanche Diode;8 to 10GHz;Pout 100mW min CW
44▼	MS805B	14	GA	F27d	Avalanche Diode,10 to 12GHz,Pout 100mW min CW
45	MS805X	14	GA	F27d	Avalanche,Min power output (CW) 100mW;Typ. current-15 to 30mA;typ volt -35 to 70V.
46▼	MS806A	14	GA	F27d	Avalanche Diode;8 to 10GHz;Pout 200mW min. CW
47▼	MS806B	14	GA	F27d	Avalanche Diode,10 to 12GHz;Pout 200mW min CW
48	MS806X	14	GA	F27d	Avalanche,Min power output (CW) 200mW;Typ current-25 to 50mA;typ volt -50 to 70V
49	MS807X	14	GA	F27d	Avalanche,Min power output (CW) 300mW;Typ. current-25 to 60mA,typ volt -50 to 70V
50	MS808X	14	GA	F27d	Avalanche;Min power output (CW) 400mW;Typ current-25 to 60mA;typ volt -50 to 70V
51▼	MS809A	14	GA	F27d	Avalanche Diode,8 to 10GHz;Pout 500mW min CW
52▼	MS809B	14	GA	F27d	Avalanche Diode;10 to 12GHz;Pout 500mW min CW
53	MS809X	14	GA	F27d	Avalanche;Min power output (CW) 500mW,Typ current-25 to 60mA,typ volt -50 to 70V
54▼	MS810A	14	GA	F27d	Avalanche Diode,8 to 10GHz,Pout 50mW min CW
55▼	MS810B	14	GA	F27d	Avalanche Diode;10 to 12GHz;Pout 50mW min. CW
56▼	MS811A	14	GA	F27d	Avalanche Diode;8 to 10GHz;Pout 1 0W min. CW
57▼	MS811B	14	GA	F27d	Avalanche Diode;10 to 12GHz;Pout 1.0W min CW
58▼	MS812A	14	GA	F27d	Avalanche Diode;8 to 10GHz;Pout 2.0W min. CW
59▼	MS812B	14	GA	F27d	Avalanche Diode;10 to 12GHz;Pout 2.0W min CW
60▼	MS813A	14	GA	F27d	Avalanche Diode;8 to 10GHz;Pout 4.0W min CW
61▼	MS813B	14	GA	F27d	Avalanche Diode;10 to 12GHz;Pout 4.0W min CW
62▼	MS831A	14	GA	F27d	Avalanche Diode;4 to 6GHz;Pout 20mW min CW
63▼	MS831B	14	GA	F27d	Avalanche Diode;6 to 8GHz;Pout 20mW min. CW
64▼	MS832A	14	GA	F27d	Avalanche Diode;4 to 6GHz;Pout 50mW min CW
65▼	MS832B	14	GA	F27d	Avalanche Diode;6 to 8GHz;Pout 50mW min CW
66▼	MS833A	14	GA	F27d	Avalanche Diode;4 to 6GHz;Pout 100mW min CW
67▼	MS833B	14	GA	F27d	Avalanche Diode;6 to 8GHz;Pout 100mW min. CW
68▼	MS834A	14	GA	F27d	Avalanche Diode;4 to 6GHz;Pout 200mW min CW
69▼	MS834B	14	GA	F27d	Avalanche Diode,6 to 8GHz;Pout 200mW min. CW
70▼	MS835A	14	GA	F27d	Avalanche Diode;4 to 6GHz,Pout 500mW min CW
71▼	MS835B	14	GA	F27d	Avalanche Diode;6 to 8GHz;Pout 500mW min CW
72▼	MS836A	14	GA	F27d	Avalanche Diode;4 to 6GHz;Pout 1 0W min CW
73▼	MS836B	14	GA	F27d	Avalanche Diode;6 to 8GHz;Pout 1.0W min. CW
74▼	MS837A	14	GA	F27d	Avalanche Diode;4 to 6GHz;Pout 2.0W min. CW
75▼	MS837B	14	GA	F27d	Avalanche Diode,6 to 8GHz;Pout 2.0W min. CW
76▼	MS838A	14	GA	F27d	Avalanche Diode,4 to 6GHz;Pout 4 0W min. CW
77▼	MS838B	14	GA	F27d	Avalanche Diode;6 to 8GHz;Pout 4.0W min. CW
78	MS851X	14	GA	F27d	Avalanche;Min.Power Output(CW)10mW,Typ. Current-10 to 15mA;Typ.Volt-35 to 70V
79▼	MS852A	14	GA	F27d	Avalanche Diode;12 to 15GHz;Pout 20mW min CW
80▼	MS852B	14	GA	F27d	Avalanche Diode;15 to 18GHz;Pout 20mW min CW
81	MS852X	14	GA	F27d	Avalanche;Min.Power Output(CW)20mW;Typ Current-10 to 15mA;Typ Volt-35 to 70V.
82	MS853X	14	GA	F27d	Avalanche,Min.Power Output(CW) 30mW;Typ Current 10 to 15mA;typ Volt 35 to 70V
83	MS854X	14	GA	F27d	Avalanche,Min power output (CW) 75mW;Typ. current-15 to 30mA;typ volt -35 to 70V
84▼	MS855A	14	GA	F27d	Avalanche Diode;12 to 15GHz;Pout 100mW min CW
85▼	MS855B	14	GA	F27d	Avalanche Diode;15 to 18GHz;Pout 100mW min CW
86	MS855X	14	GA	F27d	Avalanche, Min power output (CW) 100mW;Typ. current -15 to 30mA;Typ. volt -35 to 70V.
87▼	MS856A	14	GA	F27d	Avalanche Diode,12 to 15GHz;Pout 200mW min CW
88▼	MS856B	14	GA	F27d	Avalanche Diode;15 to 18GHz;Pout 200mW min CW
89	MS856X	14	GA	F27d	Avalanche;Min power output (CW) 200mW;Typ. current-25 to 50mA;typ volt -50 to 70V
90▼	MS857A	14	GA	F27d	Avalanche Diode;12 to 15GHz;Pout 50mW min. CW
91▼	MS857B	14	GA	F27d	Avalanche Diode;15 to 18GHz;Pout 50mW min. CW
92▼	MS858A	14	GA	F27d	Avalanche Diode;12 to 15GHz;Pout 500mW min CW
93▼	MS858B	14	GA	F27d	Avalanche Diode;15 to 18GHz;Pout 500mW min. CW
94▼	MS859A	14	GA	F27d	Avalanche Diode;12 to 15GHz;Pout 1.0W min. CW
95▼	MS859B	14	GA	F27d	Avalanche Diode;15 to 18GHz;Pout 1.0W min. CW
96▼	MS871A	14	GA	F27d	Avalanche Diode;18 to 22GHz;Pout 20mW min. CW
97▼	MS871B	14	GA	F27d	Avalanche Diode;22 to 26GHz;Pout 20mW min. CW
98▼	MS872A	14	GA	F27d	Avalanche Diode;18 to 22GHz;Pout 50mW min. CW
99▼	MS872B	14	GA	F27d	Avalanche Diode;22 to 26GHz;Pout 50mW min. CW
100▼	MS873A	14	GA	F27d	Avalanche Diode;18 to 22GHz;Pout 100mW min. CW
101▼	MS873B	14	GA	F27d	Avalanche Diode;22 to 26GHz;Pout 100mW min. CW
102▼	MS874A	14	GA	F27d	Avalanche Diode;18 to 22GHz;Pout 200mW min CW
103▼	MS874B	14	GA	F27d	Avalanche Diode;22 to 26GHz;Pout 200mW min. CW
104▼	MS891A	14	GA	F27d	Avalanche Diode;26 to 33GHz;Pout 20mW min. CW
105▼	MS891B	14	GA	F27d	Avalanche Diode;33 to 40GHz;Pout 20mW min. CW
106▼	MS892A	14	GA	F27d	Avalanche Diode;26 to 33GHz;Pout 50mW min. CW
107▼	MS892B	14	GA	F27d	Avalanche Diode;33 to 40GHz;Pout 50mW min. CW
108▼	MS893A	14	GA	F27d	Avalanche Diode,26 to 33GHz;Pout 100mW min. CW
109▼	MS893B	14	GA	F27d	Avalanche Diode;33 to 40GHz;Pout 100mW min CW
110	PG0112X	14		F27d	X Band Avalanche Oscillator;Pout 4 0mW min,Vin 40V max.

SYMBOLS AND CODES EXPLAINED IN INTERPRETER

12. MISCELLANEOUS DIODES

IN ORDER OF (1) USE and (2) TYPE No.

LINE No.	2 TYPE No.	1 USE	DESCRIPTION MAT.	DWG. No.	TECHNICAL DATA
1	PG0113X	14		F27d	X Band Avalanche Oscillator;Pout 10mW min;Vin 40V max
2	PG0114X	14		F27d	X Band Avalanche Oscillator;Pout 20mW min;Vin 40V max.
3	PG0115X	14		F27d	X Band Avalanche Oscillator;Pout 30mW min;Vin 40V max.
4	PG0122X	14		F27d	X Band Avalanche Oscillator;Pout 4.0mW min;Vin 60V max.
5	PG0123X	14		F27d	X Band Avalanche Oscillator;Pout 10mW min;Vin 60V max.
6	PG0124X	14		F27d	X Band Avalanche Oscillator;Pout 20mW min;Vin 60V max.
7	PG0125X	14		F27d	X Band Avalanche Oscillator;Pout 30mW min;Vin 60V max.
8	PG0132X	14		F27d	X Band Avalanche Oscillator;Pout 4.0mW min;Vin 80V max.
9	PG0133X	14		F27d	X Band Avalanche Oscillator;Pout 10mW min;Vin 80V max.
10	PG0134X	14		F27d	X Band Avalanche Oscillator;Pout 20mW min;Vin 80V max.
11	PG0135X	14		F27d	X Band Avalanche Oscillator;Pout 30mW min;Vin 80V max.
12	PG0142X	14		F27d	X Band Avalanche Oscillator;Pout 4.0mW min;Vin 100V max.
13	PG0143X	14		F27d	X Band Avalanche Oscillator;Pout 10mW min;Vin 100V max.
14	PG0144X	14		F27d	X Band Avalanche Oscillator;Pout 20mW min;Vin 100V max.
15	PG0145X	14		F27d	X Band Avalanche Oscillator;Pout 30mW min;Vin 100V max.
16	PG0152X	14		F27d	X Band Avalanche Oscillator;Pout 4.0mW min;Vin 120V max.
17	PG0153X	14		F27d	X Band Avalanche Oscillator;Pout 10mW min;Vin 120V max.
18	PG0154X	14		F27d	X Band Avalanche Oscillator;Pout 20mW min;Vin 120V max
19	PG0155X	14		F27d	X Band Avalanche Oscillator;Pout 30mW min;Vin 120V max
20▼#	S3019	14	Si		Impatt Diode; Pout 500mW;Fout 8.5G to 12.4GHz; Vop 70 to 90V; Iop 110mA.
21▼#	S3020	14	GA		Gunn Diode; Pout 150mW; Fout 10.5G to 12.0GHz; Vop 8.0 to 13V; Iop 500mA.
22♦#	S8201	14	GA		Gunn Diode; Pout §##MW;Fout 8.5G to 10.5GHz;Vop 7.0 to 13V;Iop 400mA.
23♦	VAO21AN19	14	Si	F27t	Impatt Diode;Pout 10mW;Freq 12.4-18GHz;Typ volt 60V;Typ Current 24mA;Typ efficiency .70%
24▼	VAO21AN21	14	Si	F56r	Impatt Diode;Pout 10mW;Freq.12.4-18GHz;Typ volt 60V;Typ current 24mA;Typ efficiency .70%.
25♦	VAO21BN19	14	Si	F27t	Impatt Diode;Pout 25mW,Freq 12.4-18GHz;Typ volt 63V;Typ current 26mA;Typ efficiency 1 5%
26▼	VAO21BN21	14	Si	F56r	Impatt Diode;Pout 25mW;Freq 12.4-18GHz;Typ volt 63V;Type current 26mA;Typ efficiency 1.5%.
27▼	VAO22CN19	14	Si	F27t	Impatt Diode;Pout 50mW;Freq 12.4-18GHz;Typ volt 64V;Typ current 38mA;Typ efficiency 2.0%.
28♦	VAO22CN21	14	Si	F56r	Impatt Diode;Pout 50mW;Freq 12 4-18GHz;Typ Volt 64V;Typ current 38mA;Typ Efficiency 2.0%.
29▼	VAO22DN19	14	Si	F27t	Impatt Diode;Pout 100mW;Freq 12.4-18GHz;Typ volt 65V,Typ current 46mA;Typ efficiency 3.4%
30▼	VAO22DN21	14	Si	F56r	Impatt Diode;Pout 100mW;Freq 12.4-18GHz;Typ volt 65V;Typ current 46mA;Typ efficiency 3.4%.
31▼	VAO22EN19	14	Si	F27t	Impatt Diode;Pout 200mW;Freq 12 4-18GHz;Typ volt 69V;Typ current 60mA;Typ efficiency 5.0%.
32▼	VAO22EN21	14	Si	F56r	Impatt Diode;Pout 200mW;Freq 12.4-18GHz;Typ volt 69V;Typ current 60mA;Typ efficiency 5.0%.
33▼	VAO23F1N19	14	Si	F27t	Impatt Diode;Pout 300mW;Freq 12 4-15GHz;Typ Volt 70V;Typ Current 85mA;Typ efficiency 5.1%.
34▼	VAO23F1N21	14	Si	F56r	Impatt Diode;Pout 300mW;Freq 12 4-15GHz;Typ volt 70V;Typ current 35mA;Typ efficiency 5.1%.
35▼	VAO23F2N19	14	Si	F27t	Impatt Diode;Pout 300mW,Freq 15-18GHz,Typ volt 65V,Typ current 92mA,Typ volt efficiency 5.1%.
36▼	VAO23F2N21	14	Si	F56r	Impatt Diode;Pout 300mW;Freq 15-18GHz;Typ volt 65V;Typ current 92mA;Typ efficiency 5.1%
37▼	VAO23G1N19	14	Si	F27t	Impatt Diode;Pout 400mW;Freq 12.4-15GHz;Typ volt 72V;Typ current 91mA;Typ efficiency 6.1%.
38▼	VAO23G1N21	14	Si	F56r	Impatt Diode;Pout 400mW;Freq 12.4-15GHz;Typ volt 72V;Typ current 91mA;Typ efficiency 6.1%
39▼	VAO23G2N19	14	Si	F27t	Impatt Diode;Pout 400mW,Freq 15-18GHz;Typ volt 66V;Typ current 101mA;Typ efficiency 6.1%.
40▼	VAO23G2N21	14	Si	F56r	Impatt Diode;Pout 400mW;Freq 15-18GHz;Typ volt 66V;Typ current 101mA;Typ efficiency 6.1%.
41▼	VAO23H1N19	14	Si	F27t	Impatt Diode;Pout 500mW;Freq 12.4-15GHz;Typ volt 74V;Typ current 99mA;Typ efficiency 6.8%.
42▼	VAO23H1N21	14	Si	F56r	Impatt Diode;Pout 500mW;Freq.12.4-15GHz;Typ volt 74V;Typ current 99mA;Typ efficiency 6.8%.
43▼	VAO23H2N19	14	Si	F27t	Impatt Diode;Pout 500mW,Freq 15-18GHz;Typ volt 67V;Typ current 110mA;Typ efficiency 6.8%.
44▼	VAO23H2N21	14	Si	F56r	Impatt Diode;Pout 500mW;Freq 15-18GHz;Typ volt 67V;Typ current 110mA;Typ efficiency 6.8%
45▼	VAO31AN19	14	Si	F27t	Impatt Diode;Pout 10mW;Freq 6 0-8.0GHz;Typ volt 100V;Typ current 13mA;Typ efficiency .80%.
46▼	VAO31AN20	14	Si	F27am	Impatt Diode;Pout 10mW;Freq 6.0-8.0GHz;Typ volt 100V;Typ current 13mA;Typ efficiency .80%
47▼	VAO31AN21	14	Si	F56r	Impatt Diode;Pout 10mW;Freq 6.0-8.0GHz;Typ volt 100V;Typ current 13mA;Typ efficiency .80%.
48▼	VAO31AN22	14	Si	F56s	Impatt Diode;Pout 10mW;Freq 6.0-8.0GHz;Typ volt 100V;Typ current 13mA;Typ efficiency .80%.
49▼	VAO31BN19	14	Si	F27t	Impatt Diode,Pout 25mW,Freq 6 0-8.0GHz;Typ volt 105V;Typ current 17mA;Typ efficiency 1.4%.
50▼	VAO31BN20	14	Si	F27am	Impatt Diode;Pout 25mW;Freq 8.0GHz;Typ volt.105V;Typ.current 17mA;Typ. efficiency 1.4%.
51▼	VAO31BN21	14	Si	F56r	Impatt Diode;Pout 25mW;Freq 6.0-8.0GHz;Typ volt 105V;Typ current 17mA;Typ efficiency 1.4%.
52▼	VAO31BN22	14	Si	F56s	Impatt Diode,Pout 25mW;Freq 6 0-8 0GHz;Typ volt 105V;Typ current 17mA;Typ efficiency 1.4%.
53▼	VAO32CN19	14	Si	F27t	Impatt Diode;Pout 50mW;Freq.6.0-8.0GHz;Typ volt 100V;Typ current 18mA;Typ efficiency 2.8%.
54▼	VAO32CN20	14	Si	F27am	Impatt Diode;Pout 50mW;Freq.6.0-8.0GHz;typ volt 100V;Typ current 18mA;Typ efficiency 2.8%.
55▼	VAO32CN21	14	Si	F56r	Impatt Diode;Pout 50mW;Freq 6 0-8.0GHz;Typ volt 100V;Typ current 18mA;Typ efficiency 2.8%.
56▼	VAO32CN22	14	Si	F56s	Impatt Diode;Pout 50mW;Freq 6.0-8.0GHz;Typ volt 100V;Typ current 18mA;Typ efficiency 2.8%
57▼	VAO32DN19	14	Si	F27t	Impatt Diode;Pout 100mW;Freq.6.0-8.0GHz;typ volt 105V;Typ Current 25mA;Typ efficiency 3.8%.
58▼	VAO32DN20	14	Si	F27am	Impatt Diode,Pout 100mW;Freq.6.0-8.0GHz;Typ volt 105V;Typ current 25mA,Typ efficiency 3 8%.
59♦	VAO32DN21	14	Si	F56r	Impatt Diode;Pout 100mW;Freq 6.0-8.0GHz,Typ Volt 105V;Typ Current 25mA;Typ efficiency 3.8%.
60▼	VAO32DN22	14	Si	F56s	Impatt Diode;Pout 100mW;Freq 6.0-8.0GHz;Typ volt 105V;Typ current 25mA;Typ efficiency 3.8%.
61▼	VAO32EN19	14	Si	F27t	Impatt Diode;Pout 200mW;Freq.6.0-8.0GHz;Typ volt 110V;Typ current 33mA;Typ efficiency 5.5%.
62▼	VAO32EN20	14	Si	F27am	Impatt Diode;Pout 200mW;Freq 6.0-8.0GHz;Typ volt 110V;Typ current 33mA;Typ efficiency 5 5%
63▼	VAO32EN21	14	Si	F56r	Impatt Diode;Pout 200mW;Freq 6.0-8.0GHz;Typ volt 110V;Typ current 33mA;Typ efficiency 5.5%
64▼	VAO32EN22	14	Si	F56s	Impatt Diode;Pout 200mW;Freq 6.0-8.0GHz;Typ volt 110V;Typ current 33mA;Typ efficiency 5.5%.
65▼	VAO33FN19	14	Si	F27t	Impatt Diode;Pout 300mW,Freq 6.0-8.0GHz;Typ volt 100V;Typ current 65mA;Typ efficiency 4.6%
66▼	VAO33FN21	14	Si	F56r	Impatt Diode;Pout 300mW;Freq 6.0-8.0GHz;Typ volt 100V;Typ current 65mA;Typ efficiency 4.6%.
67▼	VAO33GN19	14	Si	F27t	Impatt Diode,Pout 400mW;Freq 6.0-8.0GHz;Typ volt 105V;Typ current 71mA;Typ efficiency 5.4%.
68▼	VAO33GN21	14	Si	F56r	Impatt Diode;Pout 400mW;Freq 6.0-8.0GHz;Typ volt 105V;Typ current 71mA;Typ efficiency 5.4%.
69▼	VAO33HN19	14	Si	F27t	Impatt Diode;Pout 500mW;Freq 6.0-8.0GHz;Typ volt 110V;Typ current 80mA;Typ efficiency 5.7%.
70▼	VAO33HN21	14	Si	F56r	Impatt Diode;Pout 500mW;Freq 6.0-8.0GHz;Typ volt 110V;Typ current 80mA;Typ efficiency 5 7%
71▼	VAO34JN19	14	Si	F27t	Impatt Diode;Pout 750mW;Freq 6.0-8.0GHz;Typ volt 120V;Typ current 100mA;Typ efficiency 6.3%
72▼	VAO34KN19	14	Si	F27t	Impatt Diode;Pout 1.0W;Freq.6.0-8.0GHz;Typ volt 125V;Typ current 112mA;Typ efficiency 7.0%
73#	X6A71	14	Si	F27d	J-Band Oscill.;Aval. Diodes;Freq.range 5.5-8GHz;Pout 30mW min;Vr 130V max;Ir 2.0mA min.
74#	X6A72	14	Si	F27d	J-Band Oscill.;Aval. Diodes;Freq.range 5 5-8GHz;Pout 60mW min;Vr 130V max;Ir 2.0mA min.
75#	X6A73	14	Si	F27d	J-Band Oscill.,Aval. Diodes;Freq.range 5.5-8GHz;Pout 90mW min;Vr 130V max;Ir 2.0mA min
76#	X6A74	14	Si	F27d	J-Band Oscill ;Aval Diodes;Freq.range 5 5-8GHz;Pout 140mW min;Vr 130V max,Ir 2.0mA min
77	X6A100	14		F27u	X Band Oscillators, Avalanche Diodes;freq range 8-12GHz;Vr-110max;Ir 10mA min.
78	X6A101	14		F27u	X Band Oscillators, Avalanche Diodes;freq range 8-12GHz;Vr-110max;Ir 10mA min
79	X6A102	14		F27u	X Band Oscillators, Avalanche Diodes;freq range 8-12GHz;Vr-110max;Ir 10mA min.
80	X6A103	14		F27u	X Band Oscillators, Avalanche Diodes;freq range 8-12GHz;Vr-110max;Ir 10mA min.
81	X6A104	14		F27u	X Band Oscillators, Avalanche Diodes;freq range 8-12GHz;Vr-110max;Ir 20mA min.
82	X6A105	14		F27u	X Band Oscillators, Avalanche Diodes,freq range 8-12GHz,Vr-110max,Ir 30mA min.
83	X6A106	14		F27u	X Band Oscillators, Avalanche Diodes;freq range 8-12GHz;Vr-220max,Ir 40mA min.
84	X6A107	14		F27u	X Band Oscillators, Avalanche Diodes;freq range 8-12GHz;Vr-220max;Ir 50mA min
85▼	A4S360J	15	Si	F27ah	Cap 5 5pfmax,VBR 75-110V;Carrier Lifetime400ns max;Trans.time 600psmax;Output Freq. 2 0GHz.
86▼	A4S360K	15	Si	MS356	Cap 5.5pfmax;VBR 75-110V;CarrierLifetime400nsmax;Trans.time600ps max;Output Freq 2 0GHz
87▼	A4S370I	15	Si	F56p	Cap 3 5pfmax;VBR 40-60V;Carrier Lifetime150ns max;Trans.time200psmax;Output Freq. 6.0GHz.
88▼	A4S370J	15	Si	F27ah	Cap 3.5pfmax;VBR 40-60V;Carrier Lifetime150nsmax;Trans.time200psmax;Output Freq. 6.0GHz
89▼	A4S375I	15	Si	F56p	Cap 1 3pfmax;VBR 20-40V;Carrier Lifetime60ns max;Trans.time 120psmax,Output Freq. 10GHz.
90▼	A4S375J	15	Si	F27ah	Cap 1 3pfmax;VBR 20-40V,Carrier Lifetime 60nsmax;Trans time120ps max;Output Freq. 10GHz
91#	CXY13D	15	GA	F27h	Gunn effect device; PO 25mW; Pd 1 3W;Freq. 8 0 GHz-12GHz
92#	CXY13E	15	GA	F27h	Gunn effect device;Po 35mW;Pd 1.3W;Freq 8.0GHz-12GHz
93	DVB6100A	15	Si§§	F27g	VB 15V min;Cj 250pf - 500pf at 6.0V;Carrier lifetime 10nS min;Freq. 400GHz min.
94	DVB6100B	15	Si§§	F27g	VB 15V min;Cj 500pf -1.0pf at 6.0V;Carrier lifetime 10nS min;Freq 400GHz min
95	DVB6100C	15	Si§§	F27g	VB 15V min,Cj 1.0pf -1.5pf at 6.0V;Carrier lifetime 10nS min;Freq. 400GHz min
96	DVB6101A	15	Si§§	F27g	VB 30V min;Cj .250pf -.500pf at 6 0V;Carrier lifetime 10nS min;Freq. 400GHz min.
97	DVB6101B	15	Si§§	F27g	VB 30V min;Cj 500pf -.750pf at 6 0V,Carrier lifetime 10nS min;Freq. 400GHz min
98	DVB6101C	15	Si§§	F27g	VB 30V min;Cj 750pf -1.0pf at 6.0V;Carrier lifetime 10nS min;Freq. 400GHz min.
99	DVB6101D	15	Si§§	F27g	VB 30V min,Cj 1 0pf -1 25pf at 6 0V;Carrier lifetime 10nS min;Freq. 400GHz min.
100	DVB6101E	15	Si§§	F27g	VB 30V min,Cj 1 25pf -1.5pf at 6.0V;Carrier lifetime 10nS min,Freq 400GHz min.
101	DVB6102A	15	Si§§	F27g	VB 45V min;Cj 500pf -1.0pf at 6 0V;Carrier lifetime 25nS min;Freq. 300GHz min.
102	DVB6102B	15	Si§§	F27g	VB 45V min,Cj 1 0pf -1.5pf at 6 0V;Carrier lifetime 25nS min;Freq 300GHz min.
103	DVB6102C	15	Si§§	F27g	VB 45V min;Cj 1.5pf -2 0pf at 6 0V;Carrier lifetime 25nS min;Freq 300GHz min.
104	DVB6102D	15	Si§§	F27g	VB 45V min,Cj 2.0pf -3.0pf at 6.0V,Carrier lifetime 25nS min;Freq 300GHz min.
105	DVB6103A	15	Si§§	F27g	VB 60V min,Cj 500pf -1 0pf at 6.0V;Carrier lifetime 60nS min;Freq. 200GHz min.
106	DVB6103B	15	Si§§	F27g	VB 60V min,Cj 1.0pf -1.5pf at 6 0V;Carrier lifetime 60nS min;Freq 200GHz min.
107	DVB6103C	15	Si§§	F27g	VB 60V min;Cj 1.5pf -2 0pf at 6 0V,Carrier lifetime 60nS min;Freq. 200GHz min.
108	DVB6103D	15	Si§§	F27g	VB 60V min,Cj 2.0pf -3 0pf at 6.0V;Carrier lifetime 60nS min;Freq 200GHz min.
109	DVB6104A	15	Si§§	F27g	VB 75V min,Cj 1.5pf -3 5pf at 6 0V;Carrier lifetime 100nS min;Freq 150GHz min
110	DVB6104B	15	Si§§	F27g	VB 75V min,Cj 3 5pf -5 5pf at 6.0V;Carrier lifetime 100nS min;Freq. 150GHz min

SYMBOLS AND CODES EXPLAINED IN INTERPRETER

12. MISCELLANEOUS DIODES

IN ORDER OF (1) USE and (2) TYPE No.

LINE No.	2 TYPE No.	1 USE	DESCRIPTION MAT.	DWG. No.	TECHNICAL DATA
1	DVB6104C	15	Si§§	F27g	VB 75V min;Cj 5 5pf -7 5pf at 6 0V,Carrier lifetime 100nS min,Freq 150GHz min
2	DVB6104D	15	Si§§	F27g	VB 75V min;Cj 7 5pf -10pf at 6.0V,Carrier lifetime 100nS min;Freq 150GHz min
3▼	GC2511	15	Si	F27an	Snap time 70ps max;VB 10Vmin;Cj at 0V(1MHz) 500pf.800pf;Rs 1.5Ωmax
4♦	GC2512	15	Si	F27an	Snap Time 70ps max,VB 10Vmin;Cj at 0V(1 MHz)800pf-1.1nf;Rs 1 0Ωmax.
5♦	GC2521	15	Si	F27an	Snaptime 70ps max;VB 20Vmin;Cj at oV(1MHz)500ff-800ff;Rs 900mΩmax
6♦	GC2522	15	Si	F27an	Snaptime 70ps max;VB 20Vmin,Cj at 0V(1MHz)800ff-1 1pf;Rs 700mΩmax.
7♦	GC2531	15	Si	F27an	Snaptime 30ps max,VB 30Vmin;Cj at oV(1MHz)500ff-800ff;Rs 800mΩmax
8♦	GC2532	15	Si	F27an	Snaptime 80ps max,VB 30Vmin;Cj at oV(1MHz)800ff-1.1pf;Rs 600mΩmax.
9♦	GC2541	15	Si	F27an	Snaptime 100ps max,VB 40Vmin,Cj at oV(1MHz)500ff-800ff;Rs 700mΩmax.
10♦	GC2542	15	Si	F27an	Snaptime 100ps max;VB 40Vmin;Cj at oV(1MHz) 800ff-1.1pf;Rs 600mΩmax
11	GC3202	15	Si	F49a	Varactor,Snaptime 8.0ns max;Vb180Vmin;Po 24W,Fo 500MHz max;Cj at 6.0V,1 0MHz 25pF max.
12	GC3203	15	Si	F49a	Varactor;Snaptime 1 0ns max;Vb 80Vmin,Po 20W;fo 1 2GHz max;Cj at 6.0V,1 0MHz 12pF max.
13	GC3204	15	Si	F27w	Varactor,Snaptime 650ps max,Vb 80Vmin;Po 6.0W;fo 2.5GHz max,Cj at 6.0V,1.0MHz 6.0pF max.
14	GC3205	15	Si	F27w	Varactor;Snap Time 300ps max;Vb 45V min;Po 2 5W,fo 5 0GHz max,Cjat 6 0V,1.0MHz 3.0pF max
15	GC3206	15	Si	F27w	Varactor;Snaptime 150ps max,Vb 40Vmin,Po 1.5W;fo 8.0GHz max;Cj at 6.0V,1 0MHz 2 0pF max.
16	GC3207	15	Si	F27w	Varactor;Snaptime 120ps max;Vb 35Vmin;Po 1.0W;fo 12GHz max,Cj at 6.0V,1.0MHz 1 0pF max
17	GC3208	15	Si	F27w	Varactor;Snaptime 100ps;Vb 25Vmin;Po 500mW,fo 18GHz max;Cj at 6 0V,1 0MHz 600fF max
18	GC3209	15	Si	F10z	Varactor,Snaptime 80ps;Vb 6 0Vmin;Po 100mW,fo 24GHz max;Cj at 6.0V,1 0MHz 300fF max
19	HP5082-0299	15		A263	For UHF to X Band;VBR 50V min;transition time 200ps max,Cap 4 5pf max.
20	HP5082-0310	15		F56g	For S-C-K-Ku Bands;PO 400mWmin,fo 6 0GHz,VBR60Vmax;transition time160psmax;Cap3.5pf max
21	HP5082-0320	15		F56g	For S-C-X-Ku Bands;PO 225mWmin,fo 10GHz,VBR40Vmax;transition time 75psmax;Cap1 3pf max.
22	HP5082-0335	15		F27d	For S-C-X-Ku Bands;PO 30mWmin;fo 16GHz,VBR30Vmax;transition time 60ps max,Cap700ff max.
23	HP5082-0360	15		S268	For S-C-X-Ku Bands;VBR 110V max;Cap 5.5pf max;transition time 360ps max
24▼	HP5082-0365	15		F27d	For S-C-X-KU Bands;VBR 110V max;Cap 5 5 pf max;Transition time 360 ps max.
25	HP5082-0370	15		F56g	For S-C-X-Ku Bands;VBR 60V max,Cap 3 5pf max;transition time 160ps max
26	HP5082-0375	15		F56g	For S-C-X-Ku Bands;VBR 40V max;Cap 1 3pf max;transition time 75ps max
27	HP5082-0386	15		F27d	For S-C-X-Ku Bands;VBR 30V max;Cap 700ff max,transition time 60ps max.
28♦#	S3015A	15	Si	F27e	Carrier lifetime 15ns;Vb 30V,Ct 1 3pF;Fin 840MHz at Pin 1 0W;Fout 7560MHz at Pout 80mW
29♦#	S3015B	15	Si	F56b	Carrier lifetime 15ns;Vb 30V;Ct 1 3pF;Fin 470MHz at Pin 1 0W;Fout 11 28GHz at Pout 11mW
30#	ZC0300	15	#	S268	Fin 200MHz at Pin 15W;Fout 2.0GHz Pout 2 0W;RJC20°c/w,Ctot 2.5-6.5pF;VR75.
31#	ZC0310	15	#	F56g	Fin 600 MHz at Pin 4 0W;Fout 6.0GHz at Pout 400mW;RJC 30° C/W,Ctot 1 9-3.5PF;VR40
32#	ZC620	15	#	Z60	Fin 2 5GHz at Pin 1 0W;Fout 10GHz at Pout 250mW;RJC40°c/w;Ctot 6-1.0pF;VR35
33	40598A	16	GA	M437	IF 50mA;VR 2 0V,Radiant Po 1 6mW;Response 9300ang;VF1.4V
34	40736R	16	GA	M512	IFM 1 5A, IF(AV) 50mA, VRM 2.0V; Radiant Po 1 0mW; Response 9300 Ang ; VF 1 4V (TYP.)
35▼	CL100	16	GA	C135a	Radiant Po 1 0mW at IF 100mAdc;VF 1 5V;Pd 150mW;Wavelength 930nm,VBR 5 0V;Rs 1 2Ω
36▼	CL110	16	GA	C136	Radiant Po 250uW min at IF 50mAdc;VF 1 6V;Pd 100mW,Wavelength 910nm;Cap 80pf.
37▼	CL110A	16	GA	C136	Rad Po 500uW min at IF 50mAdc;VF 1.5V;Pd 100mW;VR 3 0V,Wavel 910nm;VBR3.0V min;Cap. 80pf
38▼	CL110B	16	GA	C136	Rad Po 600uW min at IF 50mAdc,VF 1.5V;Pd 100mW;VR 5.0V;Wavel 910nm;VBR5 0V min;Cap 80pf
39▼	CL150	16	GA	M372b	Radiant Po 270uW min at IF 50mAdc,VF 1 5V;Pd 150mW;VR 6.0V;Wavelength 930nm,VBR 6 0V,Rs 1 3Ω
40#	CQY10	16	GA	TO5	Radiant Po 1.5mWmax; Wave length 910nm,VR15V;VF1 3V,IF100mA
41#	CQY11A	16		TO18	Vr2 0Vmax;If30mA,wavelength 8750A;tr1 0ns;Sens 450mW/cm2
42#	CQY11B	16		TO18	Vr2 0Vmax,If30mA;wavelength 8750A;tr1 0ns;Sens 450mW/cm2
43#	CQY12A	16		TO5	Vr2 0Vmax;If300mA;Ptot 750mW,wavelength 8750A,tr1.0ns
44#	CQY12B	16		TO5	Vr2.0Vmax;If300mA;Ptot750mW,wavelength 8750A,Sens 450mW/cm2/sr,tr 1 0ns
45▼#	GL300	16	GA		Radiant Power .120mW,Wavelength 9400%A,VF1 2V;If30mA;VR6.0V;Epoxy resin package
46▼#	GL503	16	GA	TO18	Radiant Power 1.0mW,Wavelength 9400°A;VF 1 3V,If 50mA;VR 6.0V
47▼#	GLE103	16	GA	M372	Radiant Power .120mW;Wavelength 9400°A,VF 1 2V,If30mA;VR6 0V,Ceramic Package with lens
48▼#	GND500	16	GA	TO18	Radiant Power 600mW;Wavelength 9400°A,Negative Resistance Light Emitter.
49	HP5082-4104	16	GA	M274	Tot.PO 120uW,Axial Radiation Intensity 50uW/Steradian;Wavelength 9000A
50	HP5082-4107	16	GA	M327	Tot PO 150uW;Axial radiation Intensity 200uW/Steradian;Wavelength 9000A
51	HP5082-4120	16	GA	C127	Tot PO 200uW,Axial Radiation Intensity 100uW/Steradian;Wavelength 9000A
52	HP5082-4310	16	GA	M528	Id 10nA,VF1 4Vmax,Output Res.50Ωmax,Cap 250pF;tr 100ns
53	HP5082-4320	16	GA	M528	Id 50nA,VF1 4Vmax;Output Res 50Ωmax;Cap 250pF;tr 100ns.
54▼	HP5082-4403	16	GA	M608a	Pd 200mW;VF 1 6V;VBR 3 0Vmin,Luminous Intensity 2.0mcd;If 1.0A;Wavelength 655nM
55▼	HP5082-4405	16	GA	M529a	Pd 85mW,VF 1.6V;VBR 4.0Vmin,Luminance 250fL,If 1.0A;Wavelength 655nM.
56▼	HP5082-4415	16	GA	M609	Pd 200mW,VF 1 6V,VBR 3 0Vmin;Luminous Intensity 2.0mcd;If 1.0A,Wavelength 655nM
57▼	HP5082-4417	16	GA	M608	Pd 200mW,VF 1 6V,VBR 3 0Vmin,Luminous Intensity 2 0mcd;If1.0A;Wavelength 655nM
58▼	HP5082-4420	16	GA	M529	Pd 85mW;VF 1.6V,VBR4.0Vmin;Luminance 250fL;If 1 0A,Wavelength 655nM
59	MLED50	16	GA	M491a	Pd 120mW,Vr 3 0V,IF 40mA,Cap 150pF;Brightness 750fL;Wave length 6600A
60♦	MLED60	16	GA	M491a	Vr 3 0V,If 80mA,Pd 120mW,Therm R Jun to Amb 500°C/W,Pout 550uW at 50mA typ
61♦	MLED90	16	GA	M491a	Vr 3 0V,If 80mA,Pd 120mW;Therm R Jun to Amb. 500°C/W,Pout 350uW at 50mA typ
62	MLED600	16	GA	M491	Pd 150mW;Vr 4 0V;IF 50mA,Cap 150pF;Brightness 200fL,Wave length 6600A
63	MLED610	16	GA	M165a	Pd 350mW,Vr 4 0V;IF 75mA,Cap 150pF;Brightness 200fL,Wave length 6600A.
64♦	MLED630	16	GA	M614	Vr 4 0V;If 75mA,Pd 150mW,Therm. R Jun. to Amb. 400°C/W,BVr 4.0min at Ir 100ua
65	MLED900	16	GA	M491	Pd 120mW,Vr 3.0V,IF 80mA,Cap 150pF,PO 550uW;Wave length 9000A
66	MLED910	16	GA	M165a	Pd 350mW;Vr 3.0V,IF 150mA,VF 1.2V,IR 50nA;Wavelength 9000A,PO 150uW
67	MLED930	16	GA	M419d	PD 250mW,Vr 3 0V;IF 150mA;VF 1 2V,IR 50nA,Wavelength 9000A;PO 650uW
68▼#	SLED11	16	GA	M595	Vr 5.0V,Pout 150uW at If 10mA,Wavelength 68um;Vf 2 0V
69	TIL23	16	GA	M372a	Radiant Po 400uW, Wavelength .93um;VF1.25V;If 50mA; VR2.0V
70	TIL24	16	GA	M372a	Radiant PO 1 0mW, Wavelength 93um,VF1 25V;If 50mA, VR2.0V
71	TIL107	16	GA	M516	Optically coupled Isolators;Input-to-Output V±1 0kV;If 35mA output 1.6mA min Vf 1.5V max
72	TIL108	16	GA	M516	Optically coupled Isolators,Input-to-Output V±1 0kV,If 35mA output 5 0mA min. Vf 1 5V max
73	TIL201	16	GA	M494	Luminance 500fL, If 50mA; Wavelength 6600 Ang· VF1 8V;VR3.0V.
74	TIL202	16	GA	M494	Luminance 100fL,If 500mA,Wavelength 6600 Ang,Vf 1.9V,Vr 2 0V
75	TIXL06	16	GA#	S289	Radiant Po 1 2mW;Wavelength .91um;VF2 3V;IF500mA,VR2.0V.
76	TIXL12	16	GA	S289	VR 2 0V Pout 40mWmin at IF 300mA,Wavelength 93um;VF1 4V
77	TIXL13	16	GA	S289	VR 2 0V Pout 20mW min at IF 300mA;Wavelength 93um,VF 1.4V
78	TIXL14	16	GA	S289	VR 2.0V Pout 60mW min at IF 1 0A;Wavelength .93um,VF1.4V.
79	TIXL15	16	GA	S289	VR 2 0V Pout 30mW min. at IF1.0A; Wavelength .93um;VF 1 4V
80	TIXL16	16	GA	S306	VR 2.0V Pout 200mW min at IF 20A,Wavelength 93um;VF1 6V.
81	TIXL17	16	GA	M431	VR 2 0V Pout 10mW min at IF 200mA;Wavelength .85 um,VF1 5V
82	TIXL18	16	GA	M431	VR 2 0V Pout 5mW min at IF 200mA;Wavelength 82um;VF1 5V
83	TIXL19	16	GA		Pout 10mW min at IF 200mA,Wavelength 85um
84	TIXL20	16	GA		Pout 5mW min at IF 200mA,Wavelength 0 82um.
85	TIXL21	16	GA		Pout 10mW min at IF 200mA;Wavelength 0 85 um
86	TIXL22	16	GA		Pout 5mW min at IF 200mA,Wavelength 0 82um
87▼	TIXL26	16	GA	M581	Po 1.0mW min at IF 35mA;peak wavelength 93um,VF 1.2V typ
88▼	TIXL27	16	GA	S359	Po 15mW min. at IF 300mA;peak wavelength .94um;VF 1 7V typ.
89▼	TIXL28	16	GA	S360	Po 4.0W min at 3.0A IT;peak wavelength 90um;tr 50ns typ.
90▼	TIXL29	16	GA△	S360	Po 3 0W min at 2 5A IT,peak wavelength 90um;tr 50ns typ
91▼	TIXL30	16	GA△	S360	Po 5.0W min at 23A IF;Rs 30mΩ;peak wavelength .86um typ.
92▼#	BPX34	17	Si	M599	50 Elements Silicon photo elements line.
93▼#	BPY78	17	Si	C41m	Photothynstor tetrocle;Trigger illumination 1klx
94▼#	BPY79	17	Si	C29q	Photo voltaic device with lens,Ic 30uA (Rl 0;E 1000Lx)
95	VT1 5040	17		M558	Cell Dissip. 75mW max;Lamp Volt. 1.5V max;Lamp Current 49mA max;On Res 400Ω max,tr 130ms
96	VT005-8	17		C129	Pd 150mW,Dark Photocell Volt 100V;IF 100mA,VR 3 0V max,Dark Res 1.0MΩ min
97	VT21K	17	CS	TO18	Pd 50mW max,Peak Spectral Response 7400A,On Res. 4.0kΩ,tr 400us;Voltage 70V max
98	VT21M	17	CS	TO18	Pd 50mW max,Peak Spectral Response 7400A;On Res. 60kΩ;tr 400us,Voltage 250V max
99	VT030-18A	17		M557	Pd 150mW;Dark Photocell Volt 100V,IF 100mA,VR 3 0V max;Dark Res 1.0MΩ min.
100	VT31K	17	CS	TO5	Pd 125mW max,Peak Spectral Response 7400A,On Res 1 9kΩ;tr 400us,Voltage 70V max.
101	VT31M	17	CS	TO5	Pd 125mW;Peak Spectral Response 7400A;On Res 50kΩ,tr 400us,Voltage 250V max
102	VT6005	17		M558	Cell Dissip. 75mW max,Lamp Volt 6 0V max;Lamp Current 40mA max;On Res 50Ω max,tr 60ms
103	VT10030	17		M558	Cell Dissip. 75mW max,Lamp Volt. 10V max,Lamp Current 22mA max;On Res 300Ω max;tr 120ms
104	VT10150	17		M558	Cell Dissip. 75mW max,Lamp Volt 10V max,Lamp Current 22mA max;On Res 1.5kΩ max,tr 115ms
105	VT120020N	17		C130	Cell Dissip. 200mW; Lamp Volt 150V min;Lamp Current 1.2mA,On Res 200Ω max,Volt. 150V max.
106	VT120100N	17		C130	Cell Dissip 200mW;Lamp Volt 150V min;Lamp Current 1.2mA;On Res. 1.0kΩ max,Volt 150V max
107	VTL1A1	17		M555	Cell power 100mW;Lamp Volt. 1 5V;Lamp Current 50mA;Dark On Res 300Ω;Volt. 150V
108	VTL1A2	17		M555	Cell power 100mW;Lamp Volt. 6 0V;Lamp Current 40mA;Dark On Res. 150Ω;Volt 150V.
109	VTL1A3	17		M555	Cell power 100mW,Lamp Volt. 10V,Lamp Current 14mA;Dark On Res. 350Ω;Volt 150V.
110	VTL1A4	17		M555	Cell power 100mW;Lamp Volt 12V,Lamp Current 25mA;Dark On Res. 150Ω;Volt 150V.

SYMBOLS AND CODES EXPLAINED IN INTERPRETER

12. MISCELLANEOUS DIODES

IN ORDER OF (1) USE and (2) TYPE No.

LINE No.	2 TYPE No.	1 USE	DESCRIPTION MAT.	DWG. No.	TECHNICAL DATA
1	VTL1B5	17		M555	Cell power 100mW;Lamp Volt. 150V;Lamp Current 1 2mA;Dark On Res. 400Ω;Volt 150V
2	VTL1B6	17		M555	Cell power 100mW;Lamp Volt 90V;Lamp Current 300uA;Dark On Res 2.0kΩ,Volt 150V.
3	VTL2C1	17		M555b	Cell power 100mW;Signal Current 40mA;Dark On Res. 2.0kΩ;Volt 70V max
4	VTL2C2	17		M555b	Cell power 100mW;Signal Current 40mA;Dark On Res 300Ω;Volt 100V max
5	VTL2C3	17		M555b	Cell power 100mW;Signal Current 40mA;Dark On Res. 1.0kΩ;Volt 300V max
6	VTL2C4	17		M555b	Cell power 100mW,Signal Current 40mA;Dark On Res. 50Ω;Volt 70V max
7	VTL7A1	17		C131	Pd 400mW max,Lamp Current 14A;On Res 2.0kΩ max;OFF Res. 15MΩ min,Volt. 10V
8	1AU601	50	InAs		Infrared detector,Spectral Response-1-3 6u,D*BB-2.5G.
9	1AU601A	50	InAs		Infrared detector;Spectral Response-1-3.6u;D*BB-7 5G
10	1AU601B	50	InAs		Infrared detector;Spectral Response-1-3.6u;D*BB-125G.
11	1N79	50		P3	Meter Rectifier up to 3000 Mc
12	1N109	50	Ge	M85	Harmonic Generator, Working V-15V max; IF-1.0mA at 1.0V
13	1N830	50		A196b	Micro-min diode Rect. Efficiency at 100Mc-65%. min.
14	1N2326	50	Ge	C18g	Temp Comp Diode;VR-1.0V max;IF-100mA max;VF-150mV max at 2.0mA
15▼	1N3299	50	Si	A1tj	PNPN;VR 24V max;Pd 150mW max,Ip 10A max;IR 100uA;Cj 40pF max,trec 1.5usec max.
16▼	1N3558	50	Si		Matched Pair of 1N751A;VZ 10 3V;Temp.Coeff 02%/°C max;Dyn.Imp. 40Ω max.
17	1N3943	50	Si	A31a	Stabistor; Vf-2.5V at 300mA; IR-100uA at 3 0V; 750mW Diss
18	1N5411	50	Si	DO26	Bidirectional Trigger Type;Pd-500mW max;Ip-2.0A,VBO-29Vmin,35Vmax.
19#	1S144Ø	50	Si	DO7	Protected I-10mA min at .80V; IR-.504uA max at 1 0V
20#	1S996A	50	Si*	A1ce	Log. Conv, Slope 90-1.3; Range 70db min.
21#	1S996B	50	Si*	A1ce	Log. Conv; Slope .90-1.3, Range 60db min.
22#	1S998A	50	Si*	A1ce	Log. Conv; Slope 1 7-2.1; Range 70db min.
23#	1S998B	50	Si*	A1ce	Log. Conv; Slope 1.7-2.1; Range 60db min.
24	1SC301A	50	InSb		Infrared detector;Spectral Response-1-5.6u;D*BB-290G.
25	1SC301B	50	InSb		Infrared detector; Spectral Response-1-5.6u; D*BB-430G
26	1SC301C	50	InSb		Infrared detector; Spectral Response-1-5.6u; D*BB-580G
27	1SC301D	50	InSb		Infrared detector, Spectral Response-1-5.6u; D*BB-720G.
28	1SC301E	50	InSb		Infrared detector; Spectral Response-1-5 6u; D*BB-860G
29	2N4991	50	Si	L8e	Multijunction Triode;Pt-.30W;Ifwd Anode-.18A,IG-5mA;VS-10V,IS- 50mA
30	2N4992	50	Si	L8e	Multijunction Triode;Pt-.35W,Ifwd Anode-.20A;IG-5mA;VS-9V;IS-.12mA.
31	2N4993	50	Si	L8f	Multijunction Triode;Pt-.35W;Ifwd Anode-.20A;IG-5mA;VS-10V;IS-.50mA
32	3E30-1	50	Si	A1me	Avalanche 3 layer switch;VS-36V max;IS-300uA max;Power-150mW
33	3E30-2	50	Si	A1me	Symmetrical Avalanche 3 layer switch,VS-36V max;IS-300uA max;Power-150mW.
34#	9015	50	Si*	A9h	Non Linear Resistor; Exponential IR-10uA to 10mA
35	40428	50	Ge*	C18g	Temp and Volt Compensator,If-100mA max,Vf-275mV max at 25deg C
36#	A502GE	50	Ge		Ring Modulator, carrier frequency from 1 to 4Mc/s.
37#	A503GE	50	Ge		Ring Modulator, carrier frequency from 1 to 4Mc/s.
38#	A504GE	50	Ge		Ring Modulator, carrier frequency from .10 to .50MHz.
39#	AAY43	50	GeØ	M458	Diode quad arranged as ring modulator;Vr-25Veach;VF- 58V at IF-10ma.
40#	AD611A	50	Si	S250e	IMPATT Diode,freq-8 to 12 GHz;Pt- 30W min;n-2.5 percent min
41#	AD611B	50	Si	S250e	IMPATT Diode;freq-8 to 12 GHz;Pt- 4W min;n-3.0 percent min
42#	AD611C	50	Si	S250e	IMPATT Diode;freq-8 to 12 GHz;Pt-.5W min,n-3.0 percent min
43♦#	AHY10A	50	Ge	M598	Magneto diodes for VR 20V;Sensitivity 750m V/KG at VS 8V;Bm 1kg.
44▼#	AHY10B	50	Ge	M598	Magneto diodes for Vr 20V,Sensitivity 1.0V/kg at VS 8V,Bm 1kg.
45▼#	AHY10C	50	Ge	M598	Magneto diodes for Vr 20V;Sensitivity 1.0V/kg at VS 10V;Bm 1kG
46▼#	AHY10D	50	Ge	M598	Magneto diodes for Vr 20V,Sensitivity 1.9V/kg at VS 12V;Bm 1kG
47	AM6170	50	Si	M117	Matched Pair;PIV-400V;trr-100ns;If-200mA;C-4 0pf;If match-150uA-500uAdc
48	AM6171	50	Si	M117	Matched Pair;PIV-400V;trr-100ns;If-200mA;C-4.0pf;If match-500uA-2 0mAdc
49	AM6172	50	Si	M117	Matched Pair;PIV-400V;trr-100ns;If-200mA;C-4 0pf;If match-2 0mA-5.0mAdc
50	AM6173	50	Si	M117	Matched Pair;PIV-400V;trr-100ns;If-200mA,C-4.0pf;If match-5 0mA-10mAdc
51	AM6174	50	Si	M117	Matched Pair;PIV-400V;trr-100ns,If-200mA;C-4 0pf;If match-10mA-25mAdc
52	AM6175	50	Si	M118	Matched Quad,PIV-400V;trr-100ns;If-200mA;C-4.0pf;If match-150uA-500uAdc
53	AM6176	50	Si	M118	Matched Quad;PIV-400V;trr-100ns;If-200mA,C-4 0pf,If match-500uA-2 0mAdc
54	AM6177	50	Si	M118	Matched Quad;PIV-400V;trr-100ns,If-200mA;C-4.0pf;If match-2.0mA-5.0mAdc
55	AM6178	50	Si	M118	Matched Quad,PIV-400V;trr-100ns;If-200mA;C-4.0pf;If match-5.0mA-10mAdc
56	AM6179	50	Si	M118	Matched Quad,PIV-400V;trr-100ns;If-200mA;C-4 0pf;If match-10mA-25mAdc
57	AM7200	50	Si	M117	Matched Pair,PIV-100V;trr-50ns;If-50mA,C-4 0pf;If match-150uA-500uAdc
58	AM7201	50	Si	M117	Matched Pair;PIV-100V;trr-50ns;If-50mA;C-4 0pf;If match-500uA-2.0mAdc
59	AM7202	50	Si	M117	Matched Pair;PIV-100V;trr-50ns;If-504A;C-4 0pf;If match-2.0mA-5 0mAdc
60	AM7203	50	Si	M117	Matched Pair;PIV-100V;trr-50ns;If-50mA;C-4 0pf;If match-5.0mA-10mAdc
61	AM7204	50	Si	M117	Matched Pair;PIV-100V,trr-50ns;If-50mA;C-4 0pf;If match-10mA-25mAdc
62	AM7205	50	Si	M118	Matched Quad,PIV-100V;trr-50ns;If-50mA;C-4 0pf;If match-150uA-500uAdc
63	AM7206	50	Si	M118	Matched Quad,PIV-100V,trr-50ns;If-50mA;C-4 0pf;If match-500uA-2 0uAdc
64	AM7207	50	Si	M118	Matched Quad,PIV-100V;trr-50ns;If-50mA;C-4.0pf;If match-2.0mA-5.0mAdc
65	AM7208	50	Si	M118	Matched Quad,PIV-100V;trr-50ns;If-50mA;C-4 0pf;If match-5.0mA-10mAdc
66	AM7209	50	Si	M118	Matched Quad;PIV-100V;trr-50ns;If-50mA,C-4 0pf;If match-10mA-25mAdc
67	AM7270	50	Si	M117	Matched Pair;PIV-50V;trr-50ns,If-100mA,C-4 0pf;If match-150uA-500uAdc
68	AM7271	50	Si	M117	Matched Pair,PIV-50V;trr-50ns;If-100mA,C-4.0pf;If match-500uA-2.0mAdc
69	AM7272	50	Si	M117	Matched Pair;PIV-50V;trr-50ns;If-100mA;C-4.0pf;If match-2.0mA-5.0mAdc
70	AM7273	50	Si	M117	Matched Pair;PIV-50V;trr-50ns;If-100mA;C-4 0pf;If match-5 0mA-10mAdc
71	AM7274	50	Si	M117	Matched Pair,PIV-50V;trr-50ns;If-100mA;C-4.0pf;If match-10mA-25mAdc
72	AM7275	50	Si	M118	Matched Quad;PIV-50V;trr-50ns;If-100mA;C-4.0pf;If match-150uA-500uAdc
73	AM7276	50	Si	M118	Matched Quad;PIV-50V;trr-50ns;If-100mA;C-4.0pf,If match-500uA-2 0mAdc
74	AM7277	50	Si	M118	Matched Quad;PIV-50V;trr-50ns;If-100mA;C-4.0pf;If match-2 0mA-5.0mAdc
75	AM7278	50	Si	M118	Matched Quad;PIV-50V;trr-50ns;If-100mA;C-4.0pf,If match-5 0mA-10mAdc
76	AM7279	50	Si	M118	Matched Quad,PIV-50V;trr-50ns;If-100mA;C-4.0pf;If match-10mA-25mAdc
77	AM7280	50	Si	M117	Matched Pair;PIV-50V;trr-50ns,If-50mA;C-2.0pf;If match-150uA-500uAdc
78	AM7281	50	Si	M117	Matched Pair;PIV-50V;trr-50ns,If-50mA;C-2 0pf;If match-500uA-2.0mAdc
79	AM7282	50	Si	M117	Matched Pair;PIV-50V;trr-50ns;If-50mA;C-2.0pf;If match-2.0mA-5.0mAdc
80	AM7283	50	Si	M117	Matched Pair;PIV-50V;trr-50ns;If-50mA;C-2 0pf;If match-5 0mA-10mAdc
81	AM7284	50	Si	M117	Matched Pair;PIV-50V;trr-50ns,If-50mA;C-2.0pf,If match-10mA-25mAdc
82	AM7285	50	Si	M118	Matched Quad;PIV-50V;trr-50ns;If-50mA;C-2 0pf;If match-150uA-500uAdc
83	AM7286	50	Si	M118	Matched Quad;PIV-50V;trr-50ns;If-50mA;C-2 0pf,If match-500uA-2.0mAdc
84	AM7287	50	Si	M118	Matched Quad,PIV-50V;trr-50ns;If-50mA;C-2 0pf;If match-2.0mA-5.0mAdc
85	AM7288	50	Si	M118	Matched Quad;PIV-50V,trr-50ns;If-50mA;C-2.0pf,If match-5 0mA-10mAdc
86	AM7289	50	Si	M118	Matched Quad,PIV-50V;trr-50ns;If-50mA;C-2.0pf;If match-10mA-25mAdc
87	AS2X1E	50		M71c	AC and DC Contact Protection,AC Coil V-26V max;Coil I- 1A max;DC Coil V-22V max.
88	AS3X2E	50		M71c	D C Contact Protection; Coil V-44V max; Coil I-200mA max
89	AS4X2E	50		M71c	A C Contact Protection, Coil V-52V max; Coil I-200mA max
90	AS5X3E	50		M71d	D C Contact Protection; Coil V-66V.max; Coil I-250mA max
91	AS6X3E	50		M71d	A C Contact Protection; Coil V-78V.max; Coil I-200mA max
92	AS6X4E	50		M71d	D C Contact Protection; Coil V-88V.max; Coil I-250mA max
93	AS7X5E	50		M71d	D.C Contact Protection; Coil V-110V.max; Coil I-250mA max
94	AS8X4E	50		M71e	A C Contact Protection; Coil V-104V.max; Coil I-200mA max
95	AS8X6E	50		M71e	D C Contact Protection; Coil V-132V.max, Coil I-250mA max
96	ATY450	50	GeΔ	TO3	Damper Service;PIV-430V,Vf- 77 at 7 0A;Ir-150uA at 10V;If 7 0A;Ip 10A
97	AY102	50	GeΔ	TO3	Damper Service,PIV-320V;Vf- 77 at 7.0A;Ir-150uA at 10V;If 7 0A;Ip 10A.
98#	AY103K	50	GE	TO1	Prismatic Case-Damper Service; PIV 200V, Vf 1 0V at 3 0A, Ir 500uA at 200V
99#	AY104K	50	GE	TO1	General Purpose High Speed Diode; PIV 50V; Vf 1.5V at 1.0A; Ir 100uA at 50V, Ip -5 0A
100#	AY105K	50	GE	TO1	Prismatic Case-Damper Service; PIV 250V, Vf 1 0V at 3 0A, Ir 500uA at 250V
101#	AY106	50	GE	TO3	TV Booster Diode, PIV 200V; Vf 77V at 7.0A, Ir 1 0mA at 200V; Ip 10A.
102#	BA152A	50	Si#$	DO7	Interruptor Diode;Ir at 10V-10nA;BV-15V;C at 10V-1 5pf max;Rs at 10mA-1ohms
103▼#	BA176	50	Si	A1tn	Silicon protective diode for aerials.
104#	BAX33	50	Si†	M168	Matched pair;BV-30V;trr-2.0ns,IF-10mA;CO-2.0pf;IF match 50-2 0mA
105#	BAX34	50	Si†	M168	Matched pair;BV-30V;trr-2.0ns,IF-10mA;CO-2.0pf;IF match 2.0-5.0mA
106#	BAX35	50	Si†	M168	Matched pair,BV-30V;trr-2 0ns;IF-10mA;CO-2.0pf;IF match 5 0-10mA
107#	BAX36	50	Si†	M168	Matched pair;BV-75V;trr-50ns;IF-150mA;CO-5.0pf,IF match 50-2 0mA
108#	BAX37	50	Si†	M168	Matched pair;BV-75V;trr-50ns,IF-150mA,CO-5.0pf;IF match 2 0-5.0mA
109#	BAX38	50	Si†	M168	Matched pair;BV-75;trr-50ns;IF-150mA;CO-5pf,IF match 5 0-10mA
110#	BAX39	50	Si†	M169	Matched Quad;BV-30V;trr-2.0ns;IF-115mA,CO-2 0pf;IF match 50-2.0mA.

SYMBOLS AND CODES EXPLAINED IN INTERPRETER

12. MISCELLANEOUS DIODES

IN ORDER OF (1) USE and (2) TYPE No.

LINE No.	2 TYPE No.	1 DESCRIPTION USE	MAT.	DWG No.	TECHNICAL DATA
1#	BAX40	50	Si†	M169	Matched Quad;BV-30V;trr-2.0ns;IF-115mA,CO-2.0pf;IF match 2.0-5.0mA.
2#	BAX41	50	Si†	M169	Matched Quad,BV-30V,trr-2 0ns,IF-115mA;CO-2.0pf,IF match 5.0-10mA
3#	BAX42	50	Si†	M169	Matched Quad;BV-75V;trr-50ns;IF-150mA;CO-5.0pf;IF match .50-2.0mA.
4#	BAX43	50	Si†	M169	Matched Quad;BV-75V;trr-50ns;IF-150mA;CO-5.0pf;IF match 2.0-5.0mA
5#	BAX44	50	Si†	M169	Matched Quad;BV-75V;trr-50ns;IF-150mA;CO-5.0pf;IF match 5.0-10mA.
6▼	BD3600	50	Si	M630	BV 60V max;Ir 80nAmax;VF 650mV max at 1.0mA
7#	BPY20	50	Si	M355	Radiation Det,Sensitive Area 12sq.mm ,Res-1000ohms cm min;PIV-150
8#	BPY21	50	Si	M355	Radiation Det;Sensitive Area-12sq.mm.;Res-1000 ohms cm. min;PIV-150
9#	BPY22	50	Si	M355	Radiation Det,Sensitive Area-12sq.mm.;Res-1000 ohms cm. min;PIV-75
10▼#	CGY11A	50	GA	F27ak	Gunn Diode;X-Band;F8 2 to 10 0 GHz,Po 20mW;Voltage 12V.
11▼#	CGY11B	50	GA	F27ak	Gunn Diode;X-Band;F 10.0 to 12.4 GHz, Po 20mW;Voltage 12V.
12▼#	CGY12A	50	GA	F27ak	Gunn Diode;X-Band,F 8.2 to 10.0GHz;Po 50mW;Voltage 12V.
13▼#	CGY12B	50	GA	F27ak	Gunn Diode,X-Band,10.0 to 12.4 GHz;Po 50mW;Voltage 12V.
14♦#	CGY13A	50	GA	F27ak	Gunn Diode,Ku-Band,F 12.4 to 15.0 GHz,Po 20mW,Voltage 10V.
15▼#	CGY13B	50	GA	F27ak	Gunn Diode;Ku-Band;F15.0 to 18 0GHz;Po 20mW;Voltage 10V.
16▼#	CGY14A	50	GA	F27ak	Gunn Diode;Ku-Band;F12.4 to 15GHz;Po 50mW;Voltage 12V
17♦#	CGY14B	50	GA	F27ak	Gunn Diode,Ku-Band,F 15 0 to 18 0 GHz,Po 50mW;Voltage 12V
18#	CL8700	50			Multiplier Band X to Q;freq 9.0GHz,Po 50mWmin.
19#	CL8700-3	50			Multiplier Band X to Q;freq 12GHz;Po 50mWmin.
20#	CQY13	50	Si	TO12	Photo coupled diode transistors,Res 10TΩ;Cap 2 0pF;tr 3.0us,tf 3 0nS,td 1.0us
21#	CQY14	50	Si	M476	Photo coupled diode transistors,Res. 100TΩ;Cap 1.0pF;tr 3 0us;tf 3.0us;td600ns.
22#	CQY15	50	Si	TO72	Photo coupled diode transistors;Res. 10TΩ;Cap 2.0pF;tr 10ns;tf 10ns,td1 0ms
23	CR1	50	Si	DO14	RF Switch;PIV-50V;Max Insertion Loss- 7db at 10mA,Min Isolation-40db at 30V
24	CR2	50	Si	DO14	RF Switch,PIV-50V,Max Insertion Loss-.5db at 10mA;Min Isolation-43db at 30V.
25	CR3	50	Si	DO14	RF Switch,PIV-120V;Max Insertion Loss-.5db at 10mA,Min Isolation-46db at 100V.
26	CR005-01A	50		A1jj	Nominal Current- 50 ± .10%;Test Voltage-20V;Temp Coeff-.50%/C;Current Reg.50%
27	CR005-01B	50		A1jj	Nominal Current-.50 ± 10%,Test Voltage-20V;Temp Coeff-.10%/C;Current Reg.50%
28	CR005-01C	50		A1jj	Nominal Current-.50 ± 10%;Test Voltage-20V;Temp Coeff- 05%/C,Current Reg.50%
29	CR005-01D	50		A1jj	Nominal Current-.50 ± .10%;Test Voltage-20V;Temp Coeff- 01%/C;Current Reg.50%
30	CR005-01E	50		A1jj	Nominal Current- 50 ± 10%;Test Voltage-20V;Temp Coeff-.005%/C;Current Reg 50%
31	CR005-05A	50		A1jj	Nom I- 50±.50%;Test V-20V,Temp Coeff.-.50%/deg.C,Curr. Reg.-.50%
32	CR005-05B	50		A1jj	Nom I-.50±.50%;Test V-20V;Temp Coeff -.10%/deg C,Curr. Reg.-.50%
33	CR005-05C	50		A1jj	Nom I- 50±.50%,Test V-20V,Temp.Coeff.-.05%/deg.C;Curr Reg.-.50%
34	CR005-05D	50		A1jj	Nominal Current- 50 ± 50%;Test Voltage-20V;Temp Coeff-.01%/C·Current Reg.50%
35	CR005-05E	50		A1jj	Nominal Current- 50 ± .50%,Test Voltage-20V;Temp Coeff-.005%/C;Current Reg 50%
36	CR005-10A	50		A1jj	Nom I-.50±1%;Test V-20V;Temp Coeff -.50%/deg C;Curr. Reg.-.50%
37	CR005-10B	50		A1jj	Nom I- 50±1%,Test V-20V;Temp.Coeff.-.10%/deg.C;Curr. Reg.- 50%
38	CR005-10C	50		A1jj	Nom I-.50±1%;Test V-20V;Temp.Coeff.-.05%/deg.C;Curr. Reg.- 50%
39	CR005-10D	50		A1jj	Nom I- 50±1%;Test V-20V;Temp.Coeff - 01%/deg C;Curr. Reg.-.50%
40	CR005-10E	50		A1jj	Nom I- 50±1%;Test V-20V;Temp.Coeff.- 001%/deg.C;Curr. Reg.-.50%
41	CR005-50A	50		A1jj	Nom. I- 50±5%,Test V-20V;Temp.Coeff -.50%/deg C;Curr Reg - 50%
42	CR005-50B	50		A1jj	Nom. I-.50±5%;Test V-20V;Temp.Coeff - 10%/deg C;Curr. Reg.-.50%
43	CR005-50C	50		A1jj	Nom I- 50±5%;Test V-20V;Temp.Coeff.- 05%/deg.C;Curr. Reg.-.50%
44	CR005-50D	50		A1jj	Nom I- 50±5%;Test V-20V,Temp.Coeff.-.01%/deg C;Curr. Reg -.50%
45	CR005-50E	50		A1jj	Nom I- 50±5%;Test V-20V;Temp.Coeff.-.005%/deg C,Curr. Reg -.50%
46	D13D1	50	Si	TO18	Unilateral Switch, Iholding-1.5mA;Vs-8V,Is-500uA;PRV-30V;Idc-200mA
47	D13E1	50	Si	TO18	Bilateral Switch;Iholding-1.5mA;Vs-8V;Is-500uA;Idc-200mA
48	D5090	50	Si☑	A1ak§	Detector Diode;Freq. 500MHz;Efficiency 65% min.
49	D5090A	50	Si☑	A1ak§	Detector Diode;Freq 500MHz;Efficiency 65% min;VR 5 0V min
50#	DA4	50		A31e	Trigger Diode; BV35Vmin; 45Vmax, Iat BV 100uA
51	DLA5544	50		F27g	Microwave Limiter Diode;VB 20-60V;Cj 200fF at 0.0V;Rs 1.8Ω max.
52	DNA5856	50		A1ak	Noise Diode;VB 28V max at 10uA;Ct 1.0pf;Excess Noise 25db min.
53	DRZ4300R	50	Si△	S218a	Power Zener, Transient Suppressor;VZ-36V;IR-5mA;IZ(surge)-120A.
54	DVA6180	50	Si§§	F27g	Multiplier diodes,VB 25V min;Cj .200pf - 500pf at 6 0V;Freq. 200GHz min.
55	DVA6181	50	Si§§	F27g	Multiplier diodes;VB 30V min;Cj .200pf - 500pf at 6 0V;Freq. 200GHz min
56	DVA6181A	50	Si§§	F27g	Multiplier diodes,VB 30V min;Cj .500pf -.100pf at 6 0V;Freq. 200GHz min
57	DVA6181B	50	Si§§	F27g	Multiplier diodes,VB 30V min;Cj 1 0pf -2 0pf at 6 0V,Freq. 200GHz min
58	DVA6182	50	Si§§	F27g	Multiplier diodes;VB 45V min;Cj .500pf -1 0pf at 6 0V;Freq 175GHz min
59	DVA6182A	50	Si§§	F27g	Multiplier diodes,VB 45V min;Cj 1 0pf -1.5pf at 6.0V,Freq. 175GHz min.
60	DVA6182B	50	Si§§	F27g	Multiplier diodes;VB 45V min;Cj 1.5pf -2.5pf at 6.0V;Freq. 175GHz min.
61	DVA6183	50	Si§§	F27g	Multiplier diodes,VB 60V min;Cj 500pf -1 0pf at 6.0V;Freq 150GHz min.
62	DVA6183A	50	Si§§	F27g	Multiplier diodes;VB 60V min;Cj 1.0pf -1.5pf at 6.0V;Freq 150GHz min.
63	DVA6183B	50	Si§§	F27g	Multiplier diodes;VB 60V min;Cj 1.5pf -2 5pf at 6.0V;Freq. 150GHz min.
64	DVA6184	50	Si§§	F27g	Multiplier diodes;VB 75V min;Cj 1.5pf -3 5pf at 6.0V;Freq. 125GHz min.
65	DVA6184A	50	Si§§	F27g	Multiplier diodes,VB 75V min;Cj 3 5pf -5.5pf at 6.0V;Freq. 125GHz min.
66	DVA6185	50	Si§§	F49a	Multiplier diodes,VB 45V min;Cj .500pf -1 0pf at 6.0V;Freq. 175GHz min.
67	DVA6185A	50	Si§§	F49a	Multiplier diodes;VB 45V min;Cj 1.0pf -1.5pf at 6.0V;Freq. 175GHz min.
68	DVA6185B	50	Si§§	F49a	Multiplier diodes;VB 45V min;Cj 1.5pf -2 5pf at 6.0V,Freq. 175GHz min
69	DVA6186	50	Si§§	F49a	Multiplier diodes;VB 60V min;Cj .500pf -1.0pf at 6.0V;Freq. 150GHz min
70	DVA6186A	50	Si§§	F49a	Multiplier diodes,VB 60V min;Cj 1.0pf -2.5pf at 6.0V;Freq. 150GHz min.
71	DVA6186B	50	Si§§	F49a	Multiplier diodes;VB 60V min;Cj 2.5pf -4 0pf at 6.0V;Freq 150GHz min.
72	DVA6187	50	Si§§	F49a	Multiplier diodes,VB 75V min;Cj 1 5pf -3.5pf at 6.0V;Freq. 150GHz min.
73	DVA6187A	50	Si§§	F49a	Multiplier diodes;VB 75V min;Cj 3.5pf -5.5pf at 6 0V;Freq. 150GHz min
74	DVA6187B	50	Si§§	F49a	Multiplier diodes;VB 75V min;Cj 5 5pf -10pf at 6.0V;Freq. 150GHz min
75	DVA6188	50	Si§§	F49a	Multiplier diodes;VB 90V min;Cj 1.0pf -3.0pf at 6 0V;Freq. 100GHz min.
76	DVA6188A	50	Si§§	F49a	Multiplier diodes,VB 90V min;Cj 3.0pf -6 0pf at 6 0V;Freq. 100GHz min
77	DVA6188B	50	Si§§	F49a	Multiplier diodes;VB 90V min;Cj 6.0pf -10pf at 6.0V;Freq. 100GHz min
78	FA2320	50	Si	M168	Matched Pair,VF match 3.0mV;trr 50nsec;VBR 150V;Cap 5.0pf.
79	FA2330	50	Si	M168	Matched Pair;VF match 10mV;Ir match 2 0nA;VBR 125V;Cap 6 0pf
80	FA4320	50	Si	M169	Matched Quad;VF match 3.0mV;trr 10nsec;VBR 150V;Cap 5.0pf.
81	FA4330	50	Si	M169	Matched Quad, VF Match-10mV; Ir match-2.0nA;Vbr-125V; Cap -6.0 pf
82	GCC830	50	Ge		Long wavelength infrared det.; Spectral Response-2.0-30u;D*BB-6 0G.
83	GCC830A	50	Ge		Long wavelength infrared det.,Spectral Response-2.0-30u;D*BB-110G.
84	GCC830B	50	Ge		Long wavelength infrared Act.;Spectral Response-2.0-30u;D*BB-170G.
85#	GD408A	50	GA	F58	Gunn Diode;Freq 6 0 to 9.0 GHz;Pt-30mW min;n-2.0 percent typ.
86#	GD408B	50	GA	F58	Gunn Diode,Freq 6.0 to 9.0 GHz;Pt-60mW min;n-2.0 petcent typ.
87#	GD408C	50	GA	F58	Gunn Diode;Freq 6.0 to 9 0 GHz;Pt-.10W min;n-2.0 percent typ.
88#	GD408D	50	GA	F58	Gunn Diode;Freq 6.0 to 9 0 GHz;Pt-.15W min;n-2.0 percent typ.
89#	GD411A	50	GA	F58	Gunn Diode,Freq-8 to 126Hz;Pt-30mW min;n-2.0 percent typ.
90#	GD411B	50	GA	F58	Gunn Diode;Freq-8 to 126Hz;Pt-60mW min;n-2.0 percent typ
91#	GD411C	50	GA	F58	Gunn Diode;Freq-8 to 126Hz;Pt-.10W min;n-2.0 percent typ.
92#	GD411D	50	GA	F58	Gunn Diode;Freq-8 to 126Hz;Pt-.15W min,n-2.0 percent typ.
93#	GD411E	50	GA	F58	Gunn Diode;Freq-8 to 126Hz;Pt-.20W min;n-2.0 percent typ.
94#	GD508A	50	GA	F27ae	Gunn Diode;Freq 6.0 to 9.0 GHz;Pt-30mW min;n-2 0 percent typ
95#	GD508B	50	GA	F27ae	Gunn Diode;Freq 6.0 to 9.0 GHz;Pt-60mW min;n-2.0 percent typ.
96#	GD508C	50	GA	F27ae	Gunn Diode;Freq 6.0 to 9.0 GHz;Pt-.10W min;n-2.0 percent typ.
97#	GD508D	50	GA	F27ae	Gunn Diode;Freq 6 0 to 9.0 GHz;Pt-.15W min;n-2.0 percent typ.
98#	GD508E	50	GA	F27ae	Gunn Diode;Freq 6.0 to 9.0 GHz;Pt-.20W min;n-2 0 percent typ.
99#	GD511A	50	GA	F27ac	Gunn Diode;Freq-8 to 126Hz;Pt-30mW min;n-2.0 percent typ.
100#	GD511B	50	GA	F27ac	Gunn Diode;Freq-8 to 126Hz;Pt-60mW min;n-2.0 percent typ
101#	GD511C	50	GA	F27ae	Gunn Diode;Freq-8 to 126Hz;Pt-.10W min;n-2.0 percent typ.
102#	GD511D	50	GA	F27ac	Gunn Diode;Freq-8 to 126Hz;Pt-.15W min;n-2.0 percent typ.
103#	GD511E	50	GA	F27ae	Gunn Diode;Freq 8 to 126Hz;Pt-.20W min,n-2.0 percent typ.
104#	GD514A	50	GA	F27ae	Gunn Diode;Freq-12 to 16 GHz;Pt-30mW min;n-2.0 percent typ.
105#	GD514B	50	GA	F27ae	Gunn Diode;Freq-12 to 16 GHz;Pt-60mW min;n-2.0 percent typ.
106#	GD514C	50	GA	F27ae	Gunn Diode;Freq-12 to 16 GHz;Pt-.10W min;n-2.0 percent typ
107#	GD514D	50	GA	F27ae	Gunn Diode;Freq-12 to 16 GHZ;Pt-150mWmin;n-2.0percent typ.
108#	GD514E	50	GA	F27ae	Gunn Diode,Freq-12 to 16 GHz;Pt-.20W min;n-2.0 percent typ.
109#	GD518A	50	GA	F27ae	Gunn Diode;freq-15 to 21 GHz;Pt-30mW min;n-2.0 percent typ
110#	GD518B	50	GA	F27ae	Gunn Diode;freq-15 to 21 GHz;Pt-60mW min;n-2 0 percent typ

SYMBOLS AND CODES EXPLAINED IN INTERPRETER

12. MISCELLANEOUS DIODES

IN ORDER OF (1) USE and (2) TYPE No.

LINE No.	2 TYPE No.	1 USE	DESCRIPTION MAT.	DWG. No.	TECHNICAL DATA
1#	GD518C	50	GA	F27ae	Gunn Diode;Freq-15 to 21 GHz;Pt-.10W min;n-2 percent typ.
2	GHC801	50	Ge		Laser Detector; Spectral Response-2.0-15u; D*BB-6.0G(500°k,900Hz,1.0Hz).
3	GHC801A	50	Ge		Laser Detector; Spectral Response-2.0-15u; D*BB-110G(500°k,900Hz,1.0Hz).
4	GHC801B	50	Ge		Laser Detector; Spectral Response-2.0-15u; D*BB-170G(500°k,900Hz,1.0Hz).
5▼#	GP500	50	SG		Optical Mark Sensor;Combination GL503andPT501;VF1.3V;Vce10Vmin;.800uA;S/M2.5-5.0.
6	GPC215	50	Ge		Laser Detector; Spectral Response-2.0-11u; D*BB-4.0G(500°k,900Hz,1.0Hz).
7	GPC215A	50	Ge		Laser Detector; Spectral Response-2.0-11u; D*BB-6 0G(500°k,900Hz,1.0Hz).
8	GT40	50		A261	Bilateral Trigger Diac; VBO 48V max; Pd 250mW;Cap. 150pf max; Ton 1 0us max.
9▼	HEP311-RT	50	Si	TO92	Bilateral Trigger Diode;Peak Pulse 2.0A;BKDWN Fwd and Rev 32V max;Pd 300mW 100°C max.
10▼	HEPR2001-RT	50	Si	TO92	Bidirectional Switch;Cont.Fwd I 2.0Amax;Switch 8.0Vtyp;Hold I 200nAtyp;Pd 300mW 125°C max.
11▼	HEPR2021-RT	50	Si	TO92	Unidirectional Switch;Cont.Fwd I 2.0Amax;Switch 8.0Vtyp;Hold I 200nAtyp;Pd 300mW 125°C max.
12	HND1	50	Si	DO7	Noise Diode;IR-5.0uA max;Vz-15V min;19V max at 20mA;Ct-150pf max
13	HP5082-2351	50	%	A1ad	Matched pair of individual HP5082-2350 Diodes.
14	HP5082-2354	50	%	F3j	Matched pair of HP5082-2353 Diodes.
15	HP5082-2374	50	%	A1ad	Matched Quad of HP5082-2350 Diodes;ZIF Match-25 ohms max.
16	HP5082-2552	50	%	A1ad	Matched Quad of HP5082-2520 Diodes, Z1F Match-25Ωmax.
17	HP5082-2555	50	%	P3	Matched Quad of HP5082-2550 Diodes;Z1F Match-25Ωmax
18	HP5082-2707	50		M277b	Matched Pair;Schottky Barrier;Burnout-2.0ergs,CWPd-100mW.
19	HP5082-3002	50	Si#	A1n	Pin Diodes;VBR 200V;Tot cap 250fF;Res. 1.0Ω;Carrier Lifetime 100ns.
20	HP5082-3003	50	Si	A1n	Current controlled RF Resistor;VBR 100V min;Rev.Cap. 300ff max;Res. 1.5Ω max
21	HP5082-3039	50	Si#	A1n	Pin Diodes;VBR 100V;Tot cap 300fF;Res. 1 5Ω;Carrier Lifetime 100ns.
22	HP5082-3040	50	Si#	M526	Stripline Pin Diode;Pd 2 5W;VSWR 1.5 max;Insertion Loss 500mdb max.
23	HP5082-3041	50	Si§	M526	Switching Pin Diode;trr 5.0ns max.at If 20mA;Pd 2 5W;PIV 70V;Isolation 20db min.
24	HP5082-3042	50	Si§	A1n	Switching Pin Diode;trr 5.0ns max.at If 20mA;Pd 250mW,PIV 70V;Tot cap. 400ff.
25	HP5082-3043	50		A1n	Switching Pin Diode;trr 10n max.at If 20mA;PIV 50V;Tot cap 400ff max.
26	HP5082-3080	50	Si	A1n	Pin Diode;VBR 100V,Total Cap 400fF;RS 2.5Ω, Lifetime 1.3mS.
27	HP5082-3101	50	Si#	F10p	Pin Diodes;VBR 150V;Tot cap 320fF;Res. 1 5Ω;Carrier Lifetime 100ns.
28	HP5082-3102	50	Si#	F29	Pin Diodes;VBR 200V;Tot cap 300fF;Res 1.5Ω;Carrier Lifetime 100ns.
29	HP5082-3201	50	Si#	F27d	Pin Diodes;VBR 150V;Tot cap 350fF,Res 1 5Ω;Carrier Lifetime 100ns.
30	HP5082-3202	50	Si#	F27d	Pin Diodes;VBR 200V;Tot cap 320fF;Res. 1.5Ω;Carrier Lifetime 100ns.
31	K20	50	Si	DO7	Instrument Probe Diode;Test Frequency-10Gc/s.
32	L8216	50	Si♦	P3a	High power monitor, 9375MHZ, Pin 100mW cw, V output 5.5 min
33	L8216A	50	Si♦	P3a	High power monitor, 9375MHZ, Pin 100mW cw, V output 5 5 min
34	L8216B	50	Si♦	P3a	High power monitor, 9375MHZ, Pin 100mW cw, V output 5 5min.
35#	M8810A25	50	Si	C16j	Radiation Det; Area 20 sq mm; Res.-1000 Ohms/cm; PIV-25V.
36#	M8810A50	50	Si	C16j	Radiation Det, Area 20 sq.mm; Res.-1000 Ohms/cm; PIV-50V.
37#	M8810A100	50	Si	C16j	Radiation Det; Area 20 sq.mm; Res.-1000 Ohms/cm; PIV-100V
38#	M8810B100	50	Si	C16j	Radiation Det; Area 20 sq.mm; Res.-4000 Ohms/cm; PIV-100V
39#	M8811A25	50	Si	C29f	Radiation Det; Area 3 sq.mm; Res.-1000 Ohms/cm; PIV-25V.
40#	M8811A50	50	Si	C29f	Radiation Det; Area 3 sq mm; Res.-1000 Ohms/cm; PIV-50V
41#	M8811A100	50	Si	C29f	Radiation Det; Area 3 sq.mm; Res.-1000 Ohms/cm; PIV-100V.
42#	M8811B100	50	Si	C29f	Radiation Det, Area 3 sq.mm; Res.-4000 Ohms/cm; PIV-100V
43#	M8813A25	50	Si	C53	Radiation Det; Area 120 sq mm; Res -1000 Ohms/cm; PIV-25V.
44#	M8813A50	50	Si	C53	Radiation Det; Area 120 sq mm; Res.-1000 Ohms/cm; PIV-50V.
45#	MA26	50	Si△		Comp.Diode for temp Volt;If-20mA max;P-20mW max,VF-.64V max at If-1.5mA.
46#	MA60	50		A50c	Diode trigger diac;Av gate power 150mW;Blocking volt 32V;Vo4 0V.
47	MA412	50		M13	Freq Range-26500-75000; Guide Mounted; Video device.
48	MA428	50		M12	Freq. Range-50000-75000; RG-98/U Guide Mounted; Video use also.
49	MA435	50		M15	Harmonic Generator; RF input freq. 26.5-40 Gc; RF output 53-80 Gc
50	MA4146	50		M15	Harmonic Generator; RF input freq. 50-75 Gc; Con. loss 30 db
51	MA4148	50		M139	Power Indicator, Test freq-139,440Mc-10dbm min. sensitivity
52	MA4263	50		F3b	X-band switch; Pdiss-10W, VB-400V
53	MA4264	50		F3b	X-band switch; Pdiss-10W; VB-800V
54	MA4265	50		F3b	X-band switch; Pdiss-10W, VB-1200V.
55	MA4266	50		F21	X-band switch; Pdiss-10W; VB-400V.
56	MA4267	50		F21	X-band switch; Pdiss-10W; VB-800V
57	MA4268	50		F21	X-band switch; Pdiss-10W; VB-1200V
58	MA4690	50	Si	F27f	Ckt Test Snap-off;Bv-15 Vdc.min;Cjo-.50-1.0pf;Po at 1.0W-30mV min.
59	MA4691	50	Si	F27f	Ckt Test Snap-off;Bv-15 Vdc min;Cjo-.50-1.0pf;Po at 1 0W-20mV min.
60	MA4692	50	Si	F27f	Ckt Test Snap.off;Bv-15 vdc.minCjo.50-1 0pf;Po at 1 0W-15mV min
61	MA4748	50	Si	F27f	Varactor;Ir at 6.0V-1.0uA,Tau-10ns min;BV-25V;Cjo-.30- 60pf;Rs-1.2 ohms.
62	MA4749	50	Si	F27f	Varactor;Ir at 6.0V-1.0uA,Tau-10ns min;BV-25V;Cjo-.50-1 1pf;Rs-1.0 ohms
63	MA4750	50	Si	F27f	Varactor;Ir at 6.0V-1.0uA,Tau-10ns min;BV-25V,Cjo-.50-1.1pf;Rs-1 0 ohms.
64	MA4751	50	Si	F27f	Varactor;Ir at 6.0V-1.0uA;Tau-10ns min;BV-25V;Cjo-.50-1.1pf;Rs-1.0 ohms.
65	MA4752	50	Si	F27f	Varactor;Ir at 6.0V-1 0uA,Tau-10ns min;BV-25V;Cjo-1.0-1.6pf;Rs-.80 ohms
66	MA4753	50	Si	F27f	Varactor;Ir at 6 0V-1 0uA;Tau-10ns min;BV-25V;Cjo-1.5-2 0pf;Rs-.80 ohms
67	MA4754	50	Si	A31e	Varactor;Ir at 6.0V-1.0uA;Tau-20ns min;BV-20V;Cjo-.50-1 5pf;Rs-.80 ohms
68	MA4755	50	Si	A31e	Varactor;Ir at 6.0V-1.0uA;Tau-30ns min;BV-35V;Cjo-1.0-3.0pf;Rs-.60 ohms.
69	MA4756	50	Si	A31e	Varactor,Ir at 6.0V-1.0uA;Tau-50ns min;BV-35V;Cjo-2.5-10pf,Rs-.50 ohms.
70	MA47083	50	Si	A1ad	Pin,CT at 50V 300ff max;RS 690-1040Ω;BV 300V;RS Vs Bias Slope 900m to 860m
71	MCL1300	50	Si	A1cy	Field Eff Cur Limiter - Nom Pinch Off Cur. 50; Test Volt 25V, PoV 75V.
72	MCL1301	50	Si	A1cy	Field Eff Cur Limiter - Nom Pinch Off Cur. 1 0, Test Volt 25V, PoV 75V
73	MCL1302	50	Si	A1cy	Field Eff Cur. Limiter - Nom Pinch Off Cur 2.0; Test Volt 25V; PoV 75V
74	MCL1303	50	Si	A1cy	Field Eff. Cur. Limiter - Nom Pinch Off Cur 3.0; Test Volt 25V, PoV 75V.
75	MCL1304	50	Si	A1cy	Field Eff. Cur Limiter - Nom Pinch Off Cur. 4.0; Test Volt 25V; PoV 75V.
76#	MD90	50	Si		PIN;BVR-40Vmin;VF-1 0Vmax;Ct-20f max;Rs-8.0Ωmax.
77#	MD100△	50	Si		PIN;BVR-40Vmin;VF-1 0Vmax;Ct-70f max;Rs-5.0Ωmax.
78#	MD101	50	Si		PIN,BVR-40Vmin;VF-1.0Vmax;Ct-120f max;Rs-4.0Ωmax.
79#	MD102	50	Si		PIN;BVR-40Vmin;VF-1.0Vmax;Ct-220f max;Rs-2.0Ωmax
80#	MGA100	50	GA	C104	Lightsource;Pt- 60W;WaveLength-900mu;IF-400mA max,BVR-1.0V.
81#	MGA300	50	GA	C104	Lightsource,Pt-.9W;Wavelength-900mu;IF-500mA max;BVR-3.0V.
82#	MGA500	50	GA	C104	Lightsource;Pt-1.1W;Wavelength-900mu;IF-600mA max;BVR-5.0V
83#	MGA600	50	GA	C104	Lightsource;Pt-1 2W;Wavelength-900mu;IF-700mA max;BVR-6.0V.
84#	MGA700	50	GA	C104	Light source,Wavelength-900nm;Po 180mW max at If 30Apk;Pd 1.2W.
85#	MI101	50	Si$	A243	PIN,VB-60Vmin;Ct at 0V-3.0pF max;Rs-2.0Ωmax;Pd-330mW
86	MPT20	50	Si	C103	3 Layer Bilateral Trigger;Pd-30mW,Ipulse-2 0Adc;V(BR)12-21-24V(max.).
87	MPZ5-16A	50	Si	M426	Power Transient Suppressor;Pd-350W;Vop(Pk)-14V typ;Vop(Rms)-10
88	MPZ5-16B	50	Si	M426	Power Transient Suppressor,Pd-350W;Vop(Pk)-14V typ;Vop(Rms)-10.
89	MPZ5-32A	50	Si	M426	Power Transient Suppressor,Pd-350W;Vop(Pk)-28V typ;Vop(Rms)-20.
90	MPZ5-32B	50	Si	M426	Power Transient Suppressor;Pd-350W,Vop(Pk)-28V typ;Vop(Rms)-20.
91	MPZ5-32C	50	Si	M426	Power Transient Suppressor;Pd-350W;Vop(Pk)-28V typ;Vop(Rms)-20.
92	MPZ5-180A	50	Si	M426	Power Transient Suppressor,Pd-350W;Vop(Pk)-165V typ,Vop(Rms)-117
93	MPZ5-180B	50	Si	M426	Power Transient Suppressor;Pd-350W;Vop(Pk)-165V typ,Vop(Rms)-117
94	MPZ5-180C	50	Si	M426	Power Transient Suppressor;Pd-350W;Vop(Pk)-165V typ,Vop(Rms)-117.
95	MS3266	50	GA		Microwave Multiplier Varactor;Cj at-6V is 3pf max;VBR-18Vmin;ft-120GHZ min.
96	MS5000-8	50	Si$△	F27d	Microwave Multiplier Varactor;Pt-10Wmax;ft-200MHZmin;2GHZmax,BV-70Vmin;Ct-5pf max.
97	MS5000-8A	50	Si$△	F56g	Microwave Multiplier Varactor;Pt-10W max;ft-200MHz min,2GHz max;BV-70V min;Ct-5pf max.
98	MS5000-12	50	Si$△	F49	Microwave Multiplier Varactor;Pt-10Wmax,ft-200MHZmin,2GHZmax;BV-70Vmin;Ct-5pf max.
99	MS5000-16	50	Si$△	S294	Microwave Multiplier Varactor;Pt-10Wmax;ft-200MHZmin;2GHZmax;BV-70Vmin;Ct-5pf max.
100	MS5000-16A	50	Si$△	S268b	Microwave Multiplier Varactor;Pt-10Wmax;ft-200MHZmin,2GHZmax;BV-70Vmin;Ct-5pf max.
101	MS5100-4A	50	Si$△	F56h	Microwave Multiplier Varactor;Pt-10Wmax,ft-6GHZmax
102	MS5200-4A	50	Si$△	F56h	Microwave Multiplier Varactor;Pt-4W max,ft-2GHz min,10GHz max;BV-40Vmin;Ct-1pf max.
103	MS5200-8	50	Si$△	F27d	Microwave Multiplier Varactor;Pt-4W max;ft-2GHz min,10GHz max;BV-40Vmin;Ct-1pf max.
104	MS5200-8A	50	Si$△	F56g	Microwave Multiplier Varactor;Pt-4W max,ft-2GHz min,10GHz max;BV-40Vmin;Ct-1pf max
105	MS8101	50	Si$△	F27d	Varactors;VBR-50Vmin;Ct at-6V is 1pf;Ct at tuning ratio of 0V to-20V-3 31pf min
106	MS8102	50	Si$△	F27d	Varactors;VBR-50Vmin;Ct at-6V is 2pf;Ct at tuning ratio of 0V to-20V-3.9pf min.
107	MS8104	50	Si$△	F27d	Varactors,VBR-50Vmin;Ct at-6V is 4pf;Ct at tuning ratio of 0V to-20V-4.23pf min.
108	MS8108	50	Si$△	F27d	Varactors;VBR-50Vmin;Ct at-6V is 8pf,Ct at tuning ratio of 0V to-20V-4.41pf min
109	MS8112	50	Si$△	F27d	Varactors;VBR-50Vmin,Ct at-6V is 12pf;Ct at tuning ratio of 0V to-20V-4 47pf min.
110	MS8201	50	Si$△	F27d	Varactors,VBR-60Vmin;Ct at-6V is 1pf;Ct at tuning ratio of 0V to-20V-3 99pf min

SYMBOLS AND CODES EXPLAINED IN INTERPRETER

12. MISCELLANEOUS DIODES

IN ORDER OF (1) USE and (2) TYPE No.

LINE No.	2 TYPE No.	1 USE	DESCRIPTION MAT.	DWG. No.	TECHNICAL DATA
1	MS8202	50	Si$Δ	F27d	Varactors,VBR-60Vmin,Ct at-6V is 2pf;Ct at tuning ratio of 0V to-20V-4.95pf min
2	MS8204	50	Si$Δ	F27d	Varactors;VBR-60Vmin;Ct at-6V is 4pf,Ct at tuning ratio of 0V to-20V-5 55pf min
3	MS8208	50	Si$Δ	F27d	Varactors,VBR-60Vmin,Ct at-6V is 8pf;Ct at tuning ratio of 0V to-20V-5 87pf min
4	MS8212	50	Si$Δ	F27d	Varactors;VBR-60Vmin,Ct at-6V is 12pf;Ct at tuning ratio of 0V to-20V-5.99pf min
5▼#	PC500	50	SG		Optical coupled isolator;VF 1.1V,If10mA,Ic2 0mA;VCE5 0;Cap2 0pf;Iceo1 0nA;VB1000V
6	PF60Δ	50	Si	C16n	Photo Scr,PRV 60,If 300 at 50°C,max Ic 150mA at 50°C A,LGT TRIG SENS 125-300Fc
7	PF60A	50	Si	C16n	Photo Scr,PRV-60,IF-300 at 50degC C,max IC-150mA at 50degC A,LGT TRIG SENS 25-50FC
8	PF100	50	Si	C16n	Photo Scr,PRV-100;IF-300 at 50degC C,max IC-150mA at 50degC A,LGT TRIG SENS 125-300FC
9	PF100A	50	Si	C16n	Photo Scr,PRV-100,IF-300 at 50degC C;max IC-150mA at 50degC A,LGT TRIG SENS 25-50FC
10	PF200	50	Si	C16n	Photo Scr;PRV-200;IF-300 at 50degC C;max IC-150mA at 50degC A;LGT TRIG SENS 125-300FC
11	PF200A	50	Si	C16n	Photo Scr;PRV-200,IF-300 at 50degC C;max IC-150mA at 50degC A;LGT TRIG SENS 25-50FC
12	PR60	50	Si	C41f	Photo Scr,PRV-60,IF-300 at 50degC C,max IC-150mA at 50degC A,LGT TRIG SENS 2-10FC
13	PR60A	50	Si	C41f	Photo Scr,PRV-60;IF-300 at 50degC C;max IC-150mA at 50degC A;LGT TRIG SENS 4-10FC
14	PR100	50	Si	C41f	Photo Scr;PRV-100,IF-300 at 50degC C;max IC-150mA at 50degC A,LGT TRIG SENS 2-10FC
15	PR100A	50	Si	C41f	Photo Scr;PRV-100;IF-300 at 50degC C,max IC-150mA at 50degC A,LGT TRIG SENS 4-10FC
16	PR200	50	Si	C41f	Photo Scr,PRV-200,IF-300 at 50degC C;max IC-150mA at 50degC A;LGT TRIG SENS 2-10FC
17	PR200A	50	Si	C41f	Photo Scr,PRV-200,IF-300 at 50degC C;max IC-150mA at 50degC A,LGT TRIG SENS 4-10FC
18	PS5570	50	Si	DO14	Log·6 Dec If,100pA-100uA,Vf-at 100pA-60mV,Vf at 100uA-530mV,ΔVf/Dec-68mV±5%
19	PS5830	50	Si	DO14	Log:4 Dec If;100pA-1uA;Vf-at 100pA-60mV,Vf at 1uA-380mV;ΔVf/Dec-68mV ± 5.0%
20	PS5831	50	Si	DO14	Log 7 Dec If,10pA-100uA;Vf-at 10pA-5 0mV,Vf at 100uA-530mV,ΔVf/Dec-68mV±5%
21	PS5832B	50	Si	DO14	Log·8 Dec If;10pA-1 0mA,Vf-at 10pA-5 0mV,Vf at 1 0mA-650mV;ΔVf/Dec-68mV±5%
22▼	PSV100D	50	Si	DO14	RF Switching Diode;Pd 2 0W,Vr800V;Res 700mΩmax;Reverse cap 1 2pf max
23▼	PSV100J	50	Si	DO14	RF Switching Diode,Pd 2 0W,Vr 800V;Res 700mΩmax;Reverse cap 1 2pf max
24▼	PSV100L	50	Si	DO14	RF Switching Diode;Pd 750mW,Vr800V;Res 700mΩmax,Reverse cap 1 2pf max
25#	RL232	50		A229	TV Ratio detector, Matched Pair
26	RL232B	50		A229	FM Ratio detector, Matched Pair
27	SD1W	50	Si	A3c	Random/White Noise Diode,Freq 1 0cps to 20Kc,Output Variation-1 0db
28	SD2⊠	50	Si	A3c	Random/White Noise Diode,Freq 20cps to 3 0Mc,Output Variation-1 0db
29	SD2L	50	Si	A3c	Random/White Noise Diode;Freq 20cps to 10Mc,Output Variation-1 0db
30	SD2LE	50	Si	A3c	Random/White Noise Diode;Freq. 20cps to 25Mc,Output Variation-1.0db
31	SD2LEE	50	Si	A3c	Random/White Noise Diode,Freq. 20cps to 100Mc,Output Variation-1 0db
32	SD2WE	50	Si	A3c	Random/White Noise Diode,Freq 1 0cps to 100Kc,Output Variation-1 0db
33#	SD60	50	Ge	A1bw	PIV-50, Rectification Efficiency 50% min. at 40Mc; Video Detector
34#	SFD104	50	Ge	DO7	Uhf Video Detector, PIV-30V, IR-6 0uA max at 2 0V.
35#	SFD106	50	Ge	DO7	Uhf Video Detector, PIV-25V, IR-40uA max at 10V
36	STD28	50		A1ew	Bilateral Trigger Diode,Pt-1W;BV-32V max,Breakover I-150uA;ΔV-3V min at 2mA
37	STD30	50		A1ew	Bilateral Trigger Diode,Pt-1W,BV-34V max;Breakover I-150uA;ΔV-3V min at 2mA
38	STD33	50		A1ew	Bilateral Trigger Diode,Pt-1W,BV-37V max,Breakover I-150uA,ΔV-3V min at 2mA
39	STD36	50		A1ew	Bilateral Trigger Diode;Pt-1W,BV-40V max,Breakover I-150uA,ΔV-3V min at 2mA
40	STD39	50		A1ew	Bilateral Trigger Diode,Pt-1W,BV-43V max,Breakover I-150uA,ΔV-3V min at 2mA
41	STD43	50		A1ew	Bilateral Trigger Diode,Pt-1W;BV-48V max;Breakover I-150uA;ΔV-3V min at 2mA
42	STD47	50		A1ew	Bilateral Trigger Diode;Pt-1W,BV-52V max,Breakover I-150uA,ΔV-3V min at 2mA
43	STD51	50		A1ew	Bilateral Trigger Diode;Pt-1W,BV-57V max,Breakover I-150uA;ΔV-3V min at 2mA
44	STD56	50		A1ew	Bilateral Trigger Diode;Pt-1W,BV-62V max;Breakover I-150uA,ΔV-3V min at 2mA
45	STD62	50		A1ew	Bilateral Trigger Diode;Pt-1W,BV-69V max,Breakover I-150uA;ΔV-3V min at 2mA
46	STD68	50		A1ew	Bilateral Trigger Diode;Pt-1W,BV-75V max;Breakover I-150uA;ΔV-3V min at 2mA
47	STD75	50		A1ew	Bilateral Trigger Diode;Pt-1W,BV-83V max;Breakover I-150uA;ΔV-3V min at 2mA
48	STD82	50		A1ew	Bilateral Trigger Diode,Pt-1W;BV-91V max;Breakover I-150uA;ΔV-3V min at 2mA
49	STD91	50		A1ew	Bilateral Trigger Diode,Pt-1W,BV-101V max,Breakover I-150uA;ΔV-3V min at 2mA
50	STD100	50		A1ew	Bilateral Trigger Diode;Pt-1W;BV-110V max,Breakover I-150uA;ΔV-3V min at 2mA.
51	STD110	50		A1ew	Bilateral Trigger Diode;Pt-1W;BV-121V max,Breakover I-150uA,ΔV-3V min at 2mA
52	STD120	50		A1ew	Bilateral Trigger Diode;Pt-1W,BV-132V max;Breakover I-150uA;ΔV-3V min at 2mA
53#	SV14B	50	Si	A1bw	Vr-30V min ;Cjo-2 0pf max;Step recovery diode for harmonic generation
54#	SV14C	50	Si	A1bw	Vr-30V min.;Cjo-4 0pf max,Step recovery diode for harmonic generation
55#	SV24A	50	Si$	F27a	Harmonic gen snap off,VR-30V min;Co-.40- 80pf,trr-.15ns max
56#	SV24B	50	Si$	F27a	Harmonic gen snap off;VR-30V min;Co-.80-1 6pf,trr- 20ns max
57	TI42A	50	SiΔ	A60b	Avalanche Breakdown Diodes,V(BR)-28V,Pdiss-100mW,ΔV-8.0V,Ipk.non-rep -1.0A.
58	TI43A	50	SiΔ	A60b	Avalanche Breakdown Diodes,V(BR)-28V,Pdiss-100mW;ΔV-8.0V;Ipk non-rep.-1 0A
59	TIC54	50	SiΔ	A60b	Avalanche Breakdown Diodes;V(BR)-26V;Pdiss-100mW,ΔV-8 0V;Ipk.non-rep -1 0A
60	TIC55	50	SiΔ	A60b	Avalanche Breakdown Diodes,V(BR)-22V;Pdiss-100mW;ΔV-8 0V;Ipk non-rep -1.0A
61	TIC56	50	SiΔ	A60b	Avalanche Breakdown Diodes;V(BR)-26V,Pdiss-100mW,ΔV-8.0V,Ipk non-rep -1 0A
62	TIC57	50	SiΔ	A60b	Avalanche Breakdown Diodes,V(BR)-22V;Pdiss-100mW;ΔV-8 0V,Ipk.non-rep -1.0A.
63	TIL102	50	SG		Opt Coupl Isol,Vin-to-out ± 100V,Ic(on)2 5mA min at VCE 5 0V and IF 10mA.
64	TIL103	50	SG		Opt Coupl Isol,Vin-to-out ± 100V;Ic(on)10mA min at VCE 5 0V and IF 10mA.
65	V64	50	Si	A1fq	Varistor Meter Protector 1 meg at 10V 4 ohms at 1 0V
66	V72	50	Si	A1fq	Varistor Log Char from 10uA to 100mA;I(mA)-e to the 26(E-59) power
67	VAO11AN19	50	Si	F27j	Impatt Diode,Po 10mW;8-12.4GHz,Typ Voltage 85V,Typ current 15mA;Typ eff 80%
68	VAO11AN20	50	Si	F27g	Impatt Diode,Po 10mW;8-12 4GHz,Typ Voltage 85V,Typ.current 15mA,Typ eff 80%
69	VAO11BN19	50	Si	F27j	Impatt Diode;Po 25mW,8-12 4GHz,Typ Voltage 90V;Typ current 20mA,Typ eff 1 4%.
70	VAO11BN20	50	Si	F27g	Impatt diode;RF power-10mW;8-12GHz,60-90V;15mA bias;eff-1 0 percent
71	VAO12CN19	50	Si	F27j	Impatt Diode, PO 50mW;8-12.4GHz,typ voltage 70V;typ current 25mA,typ.eff 1 4%
72	VAO12CN20	50	Si	F27g	Impatt diode,Po 50mW;8-12 4GHz,typ.voltage 70V,typ current 25mA,typ efficiency 3 0%
73	VAO12DN19	50	Si	F27j	Impatt diode,Po 100mW;8-12.4GHz,typ voltage 75V;typ.current 35mA,typ efficiency 4 2%
74	VAO12DN20	50	Si	F27g	Impatt diode,Po 100mW,8-12 4GHz;typ.voltage 75V;typ current 35mA,typ efficiency 4.2%.
75	VAO12EN19	50	Si	F27j	Impatt diode, PO 200mW,8-12 4GHz;typ voltage 80V; Typ current 45mA,Typ efficiency 5.5%
76	VAO12EN20	50	Si	F27g	Impatt diode, PO 200mW,8-12.4GHz;typ voltage 80V;typ current 45mA;typ efficiency 5.5%
77	VAO13F1N19	50	Si	F27j	Impatt diode;Po 300mW;8-10GHz,typ voltage 83V;typical current 78mA;typ efficiency 4.7%
78	VAO13F2N19	50	Si	F27j	Impatt diode,Po 300mW;10-12.4GHz,typ voltage 74V;typ.current 88mA,typ.efficiency 4.7%
79	VAO13G1N19	50	Si	F27j	Impatt diode,Po 400mW;8-10GHz,typ.voltage 89V,typ current 84mA;typ efficiency 5.4%
80	VAO13G2N19	50	Si	F27j	Impatt diode,Po 400mW;10-12GHz,typ.voltage 80V,typ.current 94mA;typ efficiency 5 4%
81	VAO13H1N19	50	Si	F27j	Impatt diode;Po 500mW;8-10GHz,typ voltage 103V;typ current 85mA;typ efficiency 5 7%
82	VAO13H2N19	50	Si	F27j	Impatt diode,Po 500mW;10-12GHz,typ.voltage 93V;typ current 93mA,typ.efficiency 5.7%
83	VAO14J1N19	50	Si	F27j	Impatt diode;Po 750mW;8-10GHz,typ.voltage 100V;typ current 120mA;typ efficiency 6.3%
84	VAO14J2N19	50	Si	F27j	Impatt diode;Po 750mW;10-12 4GHz;typ voltage 90V;typ.current 133mA;typ efficiency 6.3%
85	VAO14K1N19	50	Si	F27j	Impatt diode;Po 1000mW;8-10GHz;typ voltage 100V;typ current 140mA;typ efficiency 7.1%
86	VAO14K2N19	50	Si	F27j	Impatt diode;Po 1000mW;10-12 4GHz,typ voltage 90V;typ current 155mA;typ efficiency 7 1%
87#	ZC3001	50	Si	A1ah	PIN Diode;Min BVr 150Va 100A;Max Rs 1.5Ω at 100mA;Ptot 250mW
88#	ZC3002	50	Si	A1ah	PIN Diode;Min BVr 200V at 10uA,Max Rs 1 5Ω at 100mA;Ptot 250mW.
89#	ZC3201	50	Si	F27v	PIN Diode,Min BVr 150V at 10uA;Max Rs 1 5Ω at 100mA,Ptot 300mW
90#	ZC3202	50	Si	F27v	PIN Diode;Min BVr 200V at 10uA;Max Rs 1 5Ω at 100mA,Ptot 300mW

13. TYPES WITH U.S. MILITARY SPECIFICATIONS

IN TYPE NUMBER SEQUENCE

TYPE No.	MFRS	MIL-S-19500/
JAN1N21WE,WEM,WEMR		232B
	ALP	Ø
	MIC	
JAN1N21WG,WGM,WGMR		821A
	ALP	AMEND
	MIC	1
JAN1N23WE,WEM,WEMR		233C
	ALP	Ø
	MIC	
JAN1N23WG,WGM,WGMR		822A
	ALP	AMEND
	MIC	1
JAN1N25	ALP	234
	KEM	Ø
JAN1N25WA	ALP	183A
		AMEND
		1
JAN1N26B,BM,BMR,BR		128A
	ALP	Ø
JAN1N31	ALP	236A
	KEM	Ø
JAN1N32	MIC	237A
		Ø
JAN1N53	ALP	238
	MIC	Ø
JAN1N53B,BM,BMR,BR		186B
	ALP	
JAN1N78B	ALP	129
	MIC	SigC
JAN1N78C,CM,CMR,CR		130B
	ALP	Ø
	MIC	
JAN1N82A,AG	GIC	250A
	MIC	Ø
		AMEND
		1
		EL
JAN1N93A	GESY	293A
		NAVY
JAN1N249B,RB	GESY	134A
	WESY	AMEND
		1
JAN1N250B,RB	GESY	134A
	WESY	§
		AMEND
		1
JAN1N251	FSC	188A
	RAYN	
	TEC	
	TII	
JAN1N253	GIC	194A
JAN1N254	GIC	194A
JAN1N255	GIC	194A
JAN1N256	GIC	194A
JAN1N263	PHIL	191A
JAN1N270	GIC	200A
	ITT	AMEND
	TEC	1
JAN1N276	GIC	192A
	ITT	AMEND
	TEC	1
JAN1N277	GIC	201A
	ITT	AMEND
	TEC	1
JAN1N358A,AM,AMR,AR		339
	ALP	§
JAN1N429	CRL	299
	DIC	AMEND
	MOTA	3
	TEC	
	TRW	
JAN1N430A	none	335
		AMEND
		1
		EL
JAN1N430B	none	335
		AMEND
		1
		EL
JAN1N457	CODI	193B
	FSC	AMEND
	GIC	1
	RAYN	
	TEC	
	TII	
	TRW	
	TSC	
JAN1N458	CODI	193B
	FSC	AMEND
	GIC	1
	RAYN	
	TEC	
	TII	
	TRW	
	TSC	
JAN1N459	CODI	193B
	FSC	AMEND
	GIC	1
	RAYN	
	TEC	
	TII	
	TRW	
	TSC	
JAN1N483B	†FSC	118C
	†GIC	ØØ
	†RAYN	AMEND
	†TEC	1
	†TII	
	†TRW	
	†TSC	

TYPE No.	MFRS	MIL-S-19500/
JAN1N485B	†FSC	118C
	†GIC	ØØ§
	†RAYN	AMEND
	†TEC	1
	†TII	
	†TRW	
	†TSC	
JAN1N486B	†FSC	118C
	†GIC	ØØ§
	†RAYN	AMEND
	†TEC	1
	†TRW	
	†TSC	
JAN1N538	GIC	202A
	INRC	§
	TEC	AMEND
		2
JAN1N540	GIC	202A
	INRC	§
	TEC	AMEND
		2
JAN1N547	GIC	202A
	INRC	§
	TEC	AMEND
		2
JAN1N560	EDI	167B
	GIC	§
		NAVY
JAN1N561	EDI	167B
		§
		NAVY
JAN1N643	FSC	256B
	RAYN	
	TEC	
	TII	
	TSC	
JAN1N645	†GIC	240C
	†ITT	ØØ§
	†TEC	
	†TII	
	†TRW	
JAN1N647	†GIC	240C
	†ITT	ØØ§
	†TII	
	†TRW	
JAN1N649	†GESY	240C
	†GIC	ØØ§
	†ITT	
	†TII	
	†TRW	
JAN1N658	FSC	257A
	RAYN	EL
	TEC	
	TSC	
JAN1N660	TEC	285A
		EL
JAN1N661	TEC	285A
		EL
JAN1N662	FSC	256B
	RAYN	
	TEC	
	TII	
	TSC	
JAN1N663	FSC	256B
	RAYN	
	TEC	
	TII	
	TSC	
JAN1N691	RAYN	132A
		Ø
JAN1N697	RAYN	141A
		Ø
		AMEND
		1
		NAVY
JAN1N746A	CODI	127E
	†CRL	ØØ
	†DIC	AMEND
	†INRC	2
	†MOTA	
	†TEC	
	†TII	
	†TSC	
	†USS	
JAN1N747A	CODI	127E
	†CRL	ØØ
	†DIC	AMEND
	†INRC	2
	†MOTA	
	†TEC	
	†TII	
	†TSC	
	†USS	
JAN1N748A	CODI	127E
	†CRL	ØØ
	†DIC	AMEND
	†INRC	2
	†MOTA	
	SOD	
	†TEC	
	†TII	
	†TSC	
	†USS	
JAN1N749A	CODI	127E
	†CRL	ØØ
	†DIC	AMEND
	†INRC	2
	†MOTA	
	MULB	
	SOD	
	†TEC	
	†TII	

TYPE No.	MFRS	MIL-S-19500/
JAN1N749A		
(cont)	†TSC	
	†USS	
JAN1N750A	CODI	127E
	†CRL	ØØ
	†DIC	AMEND
	†INRC	2
	†MOTA	
	MULB	
	SOD	
	†TEC	
	†TII	
	†TSC	
	†USS	
JAN1N751A	CODI	127E
	†CRL	ØØ
	†DIC	AMEND
	†INRC	2
	†MOTA	
	MULB	
	SOD	
	†TEC	
	†TII	
	†TSC	
	†USS	
JAN1N752A	CODI	127E
	†CRL	ØØ
	†DIC	AMEND
	†INRC	2
	†MOTA	
	MULB	
	SOD	
	†TEC	
	†TII	
	†TSC	
	†USS	
JAN1N753A	CODI	127E
	†CRL	ØØ
	†DIC	AMEND
	†FSC	2
	†INRC	
	†MOTA	
	MULB	
	SOD	
	†TEC	
	†TII	
	†TSC	
	†USS	
JAN1N754A	CODI	127E
	†CRL	ØØ
	†DIC	AMEND
	†FSC	2
	†INRC	
	†MOTA	
	MULB	
	SOD	
	†TEC	
	†TII	
	†TSC	
	†USS	
JAN1N755A	CODI	127E
	†CRL	ØØ
	†DIC	AMEND
	†FSC	2
	†INRC	
	†MOTA	
	MULB	
	SOD	
	†TEC	
	†TII	
	†TSC	
	†USS	
JAN1N756A	CODI	127E
	†CRL	ØØ
	†DIC	AMEND
	†FSC	2
	†INRC	
	†MOTA	
	MULB	
	SOD	
	†TEC	
	†TII	
	†TSC	
	†USS	
JAN1N757A	CODI	127E
	†CRL	ØØ
	†DIC	AMEND
	†FSC	2
	†INRC	
	†MOTA	
	MULB	
	SOD	
	†TEC	
	†TII	
	†TSC	
	†USS	
JAN1N758A	CODI	127E
	†CRL	ØØ
	†DIC	AMEND
	†FSC	2
	†INRC	
	†MOTA	
	MULB	
	SOD	
	†TEC	
	†TII	
	†TSC	
	†USS	
JAN1N759A	CODI	127E
	†CRL	ØØ
	†DIC	AMEND
	†FSC	2

TYPE No.	MFRS	MIL-S-19500/
JAN1N759A		
(cont.)	†INRC	
	†MOTA	
	SOD	
	†TEC	
	†TII	
	†TSC	
	†USS	
JAN1N816	ITT	199A
	TEC	Ø
		AMEND
		2
JAN1N821	†CODI	159C
	†CRL	ØØ
	†DIC	AMEND
	†GSE	2
	INRC	
	†KSC	
	†MOTA	
	†MSC	
	†TEC	
	†TRW	
	†TSC	
	†USS	
JAN1N823	†CODI	159C
	†CRL	ØØ
	†DIC	AMEND
	†GSE	2
	INRC	
	†KSC	
	†MOTA	
	†MSC	
	†TEC	
	†TRW	
	†TSC	
	†USS	
JAN1N825	†CODI	159C
	†CRL	ØØ
	†DIC	AMEND
	†GSE	2
	INRC	
	†KSC	
	†MOTA	
	†MSC	
	†TEC	
	†TRW	
	†TSC	
	†USS	
JAN1N827	†CODI	159C
	†CRL	ØØ
	†DIC	AMEND
	†GSE	2
	INRC	
	†KSC	
	†MOTA	
	†MSC	
	†TEC	
	†TRW	
	†TSC	
	†USS	
JAN1N829	†CODI	159C
	†DIC	ØØ
	†GSE	AMEND
	INRC	2
	†KSC	
	†MOTA	
	†MSC	
	†TEC	
	†TRW	
	†TSC	
	†USS	
JAN1N830A	ALP	229
	GIC	Ø
	MIC	AMEND
		1
		NAVY
JAN1N831A	ALP	352
		EL
JAN1N832B	ALP	353
		EL
JAN1N914	†FSC	116E
	†GIC	§
	†ITT	
	†RAYN	
	†TEC	
	†TII	
	†TSC	
JAN1N933	none	119B
JAN1N935B	†CRL	156D
	†DIC	ØØ
	†GSE	AMEND
	INRC	2
	†MOTA	
	†MSC	
	†TEC	
	†TSC	
	†USS	
JAN1N937B	†CRL	156D
	†DIC	ØØ
	†GSE	AMEND
	INRC	2
	†MOTA	
	†MSC	
	†TEC	
	†TSC	
	†USS	
JAN1N938B	†DIC	156D
	†GSE	ØØ
	INRC	AMEND
	†MOTA	2
	†MSC	
	†TEC	

TYPE No.	MFRS	MIL-S-19500/
JAN1N938B		
(cont.)	†TSC	
	†USS	
JAN1N939B	†DIC	156D
	INRC	ØØ
	†MOTA	AMEND
	†USS	2
JAN1N940B	†DIC	156D
		AMEND
		2
JAN1N941B	†DIC	157E
	†ESP	ØØ
	†GSE	AMEND
	†MOTA	2
	†USS	
JAN1N943B	†DIC	157E
	†ESP	ØØ
	†GSE	AMEND
	†MOTA	2
	†USS	
JAN1N944B	†DIC	157E
	†ESP	ØØ
	†GSE	AMEND
	†MOTA	2
	†USS	
JAN1N945B	†DIC	157E
	†USS	ØØ
		AMEND
		2
JAN1N962B	†CRL	117C
	†DIC	ØØ
	ESP	AMEND
	†FSC	2
	†MOTA	
	†TSC	
	†USS	
JAN1N963B	†CRL	117C
	†DIC	ØØ
	ESP	AMEND
	†FSC	2
	†MOTA	
	†TSC	
	†USS	
JAN1N964B	†CRL	117C
	†DIC	ØØ
	ESP	AMEND
	†FSC	2
	†MOTA	
	†TSC	
	†USS	
JAN1N965B	†CRL	117C
	†DIC	ØØ
	ESP	AMEND
	†FSC	2
	†MOTA	
	†TSC	
	†USS	
JAN1N966B	†CRL	117C
	†DIC	ØØ
	ESP	AMEND
	†FSC	2
	†MOTA	
	†TSC	
	†USS	
JAN1N967B	†CRL	117C
	†DIC	ØØ
	ESP	AMEND
	†FSC	2
	†MOTA	
	†TSC	
	†USS	
JAN1N968B	†CRL	117C
	†DIC	ØØ
	ESP	AMEND
	†FSC	2
	†MOTA	
	†TSC	
	†USS	
JAN1N969B	†CRL	117C
	†DIC	ØØ
	ESP	AMEND
	†FSC	2
	†MOTA	
	†TSC	
	†USS	
JAN1N970B	†CRL	117C
	†DIC	ØØ
	ESP	AMEND
	†FSC	2
	†MOTA	
	†TSC	
	†USS	
JAN1N971B	†CRL	117C
	†DIC	ØØ
	ESP	AMEND
	†FSC	2
	†MOTA	
	†TSC	
	†USS	
JAN1N972B	†CRL	117C
	†DIC	ØØ
	ESP	AMEND
	†FSC	2
	†MOTA	
	†TSC	
	†USS	
JAN1N973B	†CRL	117C
	†DIC	ØØ
	ESP	AMEND
	†FSC	2
	MOTA	
	†TSC	
	†USS	

cont next col.
cont next col
cont next col

† - Qualification included TX Devices

§ - NATO
Ø - USAF Preferred (TX Type Only)
Ø - Mil-Std-701 Device

13. TYPES WITH U.S. MILITARY SPECIFICATIONS

IN TYPE NUMBER SEQUENCE

TYPE No.	MFRS	MIL-S-19500/
JAN1N974B	†DIC ESP †MOTA †TSC †USS	117C ØØ AMEND 2
JAN1N975B	†DIC ESP †MOTA †TSC †USS	117C ØØ AMEND 2
JAN1N976B	†DIC ESP †MOTA †TSC †USS	117C ØØ AMEND 2
JAN1N977B	†DIC ESP †MOTA †TSC †USS	117C ØØ AMEND 2
JAN1N978B	†DIC ESP †MOTA †TSC †USS	117C ØØ AMEND 2
JAN1N979B	†DIC ESP †MOTA †TSC †USS	117C ØØ AMEND 2
JAN1N980B	†DIC ESP †MOTA †TSC †USS	117C ØØ AMEND 2
JAN1N981B	†DIC ESP †MOTA †TSC †USS	117C ØØ AMEND 2
JAN1N982B	†DIC ESP †MOTA †TSC †USS	117C ØØ AMEND 2
JAN1N983B	†DIC ESP †MOTA †TSC †USS	117C ØØ AMEND 2
JAN1N984B	†DIC ESP †MOTA †TSC †USS	117C ØØ AMEND 2
JAN1N985B	ESP †MOTA	117C ØØ AMEND 2
JAN1N986B	ESP †MOTA	117C ØØ AMEND 2
JAN1N987B	ESP †MOTA	117C ØØ AMEND 2
JAN1N988B	ESP †MOTA	117C ØØ AMEND 2
JAN1N989B	ESP †MOTA	117C ØØ AMEND 2
JAN1N990B	ESP †MOTA	117C ØØ AMEND 2
JAN1N991B	ESP †MOTA	117C ØØ AMEND 2
JAN1N992B	ESP †MOTA	117C ØØ AMEND 2
JAN1N995	GIC TEC	227 AMEND 1
JAN1N1084	none	NAVY 318 AMEND 4
JAN1N1124A,RA	EDI SOD	104C Øs
JAN1N1126A,RA	EDI SOD	104C Øs
JAN1N1128A,RA	EDI SOD	104C Øs
JAN1N1130	EDI	259A Ø AMEND 1
JAN1N1131	EDI	259A Ø AMEND 1
JAN1N1132,R	ALP	362

TYPE No.	MFRS	MIL-S-19500/
JAN1N1147	INRC	254A EL
JAN1N1149	INRC TRW	254A EL
JAN1N1184,R	†GESY TRW †WESY	297A Ø
JAN1N1186,R	†GESY TRW †WESY	297A Ø
JAN1N1188,R	†GESY TRW †WESY	297A Ø
JAN1N1190,R	TRW †WESY	297A Ø
JAN1N1198A,RA	WESY	134A AMEND 1
JAN1N1202A,RA	†GESY INRC SOD †TRW †WESY	260A ØØ
JAN1N1204A,RA	†GESY INRC SOD †TRW †WESY	260A ØØ
JAN1N1206A,RA	†GESY INRC SOD †TRW †WESY	260A ØØ
JAN1N1530A	DIC MOTA	320A AMEND 1
JAN1N1614,R	GESY SOD TRW WESY	162B § AMEND 3
JAN1N1615,R	GESY SOD TRW WESY	162B § AMEND 3
JAN1N1616,R	GESY SOD TRW WESY	162B § AMEND 3
JAN1N1731A	GIC TRW	142A Ø AMEND 3
JAN1N1733A	GIC TRW	142A Ø AMEND 3
JAN1N1734A	GIC TRW	142A Ø AMEND 3
JAN1N1742A	DIC MOTA TSC	298 AMEND 3
JAN1N1838	none	USAF 364 AMEND 1
JAN1N2135A,RA	GESY WESY	134A § AMEND 1
JAN1N2146	none	242 AMEND 1
JAN1N2153	BRA	NAVY 91 AMEND 1
JAN1N2361	EDI	SigC 187A AMEND 1
JAN1N2792	none	SigC 252A AMEND 2
JAN1N2804B,RB	†ASC †MOTA	EL 114C ØØ AMEND 2
JAN1N2805B,RB	†ASC †MOTA	114C ØØ AMEND 2
JAN1N2806B,RB	†ASC †DIC †MOTA	114C ØØ AMEND 2
JAN1N2807B,RB	†ASC †DIC †MOTA	114C ØØ AMEND 2
JAN1N2808B,RB	†ASC †DIC †MOTA	114C ØØ AMEND 2

TYPE No.	MFRS	MIL-S-19500/
JAN1N2809B,RB	†ASC †DIC †MOTA	114C ØØ AMEND 2
JAN1N2810B,RB	†ASC †DIC †MOTA	114C ØØ AMEND 2
JAN1N2811B,RB	†ASC †DIC †MOTA	114C ØØ AMEND 2
JAN1N2813B,RB	†ASC †DIC †MOTA	114C ØØ AMEND 2
JAN1N2814B,RB	†ASC †DIC †MOTA	114C ØØ AMEND 2
JAN1N2816B,RB	†DIC †MOTA	114C ØØ AMEND 2
JAN1N2818B,RB	†DIC †MOTA	114C ØØ AMEND 2
JAN1N2819B,RB	†DIC †MOTA	114C ØØ AMEND 2
JAN1N2820B,RB	†DIC †MOTA	114C ØØ AMEND 2
JAN1N2822B,RB	†DIC †MOTA	114C ØØ AMEND 2
JAN1N2823B,RB	†DIC †MOTA	114C ØØ AMEND 2
JAN1N2824B,RB	†DIC †MOTA	114C ØØ AMEND 2
JAN1N2825B,RB	†DIC †MOTA	114C ØØ AMEND 2
JAN1N2826B,RB	†DIC †MOTA	114C ØØ AMEND 2
JAN1N2827B,RB	†DIC †MOTA	114C ØØ AMEND 2
JAN1N2829B,RB	†DIC †MOTA	114C ØØ AMEND 2
JAN1N2831B,RB	†DIC †MOTA	114C ØØ AMEND 2
JAN1N2832B,RB	†DIC †MOTA	114C ØØ AMEND 2
JAN1N2833B,RB	†DIC †MOTA	114C ØØ AMEND 2
JAN1N2834B,RB	†DIC †MOTA	114C ØØ AMEND 2
JAN1N2835B,RB	†DIC †MOTA	114C ØØ AMEND 2
JAN1N2836B,RB	†DIC †MOTA	114C ØØ AMEND 2
JAN1N2837B,RB	†DIC †MOTA	114C ØØ AMEND 2
JAN1N2838B,RB	†MOTA	114C ØØ AMEND 2
JAN1N2840B,RB	†MOTA	114C ØØ AMEND 2
JAN1N2841B,RB	†MOTA	114C ØØ AMEND 2
JAN1N2842B,RB	†MOTA	114C ØØ AMEND 2
JAN1N2843B,RB	†MOTA	114C ØØ AMEND 2

TYPE No.	MFRS	MIL-S-19500/
JAN1N2844B,RB	†MOTA	114C ØØ AMEND 2
JAN1N2845B,RB	†MOTA	114C ØØ AMEND 2
JAN1N2846B,RB	†MOTA	114C ØØ AMEND 2
JAN1N2970B,RB	†DIC †INRC †MOTA †TRW †USS	124D ØØ AMEND 2
JAN1N2971B,RB	†DIC †INRC †MOTA †TRW †USS	124D ØØ AMEND 2
JAN1N2972B,RB	†DIC †INRC †MOTA †TRW †USS	124D ØØ AMEND 2
JAN1N2973B,RB	†DIC †INRC †MOTA †TRW †USS	124D ØØ AMEND 2
JAN1N2974B,RB	†DIC ESP †INRC †MOTA †USS	124D ØØ AMEND 2
JAN1N2975B,RB	†DIC ESP †INRC †MOTA †USS	124D ØØ AMEND 2
JAN1N2976B,RB	†DIC ESP †INRC †MOTA †USS	124D ØØ AMEND 2
JAN1N2977B,RB	†DIC ESP †INRC †MOTA †USS	124D ØØ AMEND 2
JAN1N2979B,RB	†DIC ESP †INRC †MOTA †USS	124D ØØ AMEND 2
JAN1N2980B,RB	†DIC ESP †INRC †MOTA †USS	124D ØØ AMEND 2
JAN1N2982B,RB	†DIC ESP †INRC †MOTA †USS	124D ØØ AMEND 2
JAN1N2984B,RB	†DIC ESP †INRC †MOTA †USS	124D ØØ AMEND 2
JAN1N2985B,RB	†DIC ESP †INRC †MOTA †USS	124D ØØ AMEND 2
JAN1N2986B,RB	†DIC ESP †INRC †MOTA †USS	124D ØØ AMEND 2
JAN1N2988B,RB	†DIC ESP †INRC †MOTA †USS	124D ØØ AMEND 2
JAN1N2989B,RB	†DIC ESP †INRC †MOTA †USS	124D ØØ AMEND 2
JAN1N2990B,RB	†DIC ESP †INRC	124D ØØ AMEND 2

cont.next col.

TYPE No.	MFRS	MIL-S-19500/
JAN1N2990B,RB (cont)	†MOTA †USS	
JAN1N2991B,RB	†DIC ESP †INRC †MOTA †USS	124D ØØ AMEND 2
JAN1N2992B,RB	†DIC ESP †INRC †MOTA †USS	124D ØØ AMEND 2
JAN1N2993B,RB	†DIC ESP †INRC †MOTA †USS	124D ØØ AMEND 2
JAN1N2995B,RB	†DIC ESP †INRC †MOTA †USS	124D ØØ AMEND 2
JAN1N2997B,RB	†DIC ESP †INRC †MOTA †USS	124D ØØ AMEND 2
JAN1N2999B,RB	†DIC ESP †INRC †MOTA †USS	124D ØØ AMEND 2
JAN1N3000B,RB	†DIC ESP †INRC †MOTA †USS	124D ØØ AMEND 2
JAN1N3001B,RB	†DIC ESP †INRC †MOTA †USS	124D ØØ AMEND 2
JAN1N3002B,RB	†DIC ESP †INRC †MOTA †USS	124D ØØ AMEND 2
JAN1N3003B,RB	†DIC ESP †INRC †MOTA †USS	124D ØØ AMEND 2
JAN1N3004B,RB	†DIC ESP †INRC †MOTA †USS	124D ØØ AMEND 2
JAN1N3005B,RB	†DIC ESP †INRC †MOTA	124D ØØ AMEND 2
JAN1N3007B,RB	†DIC ESP †INRC †MOTA	124D ØØ AMEND 2
JAN1N3008B,RB	†DIC ESP †INRC †MOTA	124D ØØ AMEND 2
JAN1N3009B,RB	†DIC ESP †INRC †MOTA	124D ØØ AMEND 2
JAN1N3011B,RB	†DIC ESP †INRC †MOTA	124D ØØ AMEND 2
JAN1N3012B,RB	ESP †INRC †MOTA	124D ØØ AMEND 2
JAN1N3014B,RB	ESP †INRC †MOTA	124D ØØ AMEND 2
JAN1N3015B,RB	ESP †INRC †MOTA	124D ØØ AMEND 2
JAN1N3016B	†CODI †DIC †INRC †MOTA †TEC †TRW †USS	115E ØØ AMEND 3

† - Qualification included TX Devices

§ - NATO
Ø - USAF Preferred (TX Type Only)
Ø - Mil-Std-701 Device

13. TYPES WITH U.S. MILITARY SPECIFICATIONS

IN TYPE NUMBER SEQUENCE

TYPE No.	MFRS	MIL-S-19500/
JAN1N3017B	†CODI	115E
	†DIC	ØØ
	†INRC	AMEND
	†MOTA	3
	†TEC	
	†TRW	
	†USS	
JAN1N3018B	†CODI	115E
	†DIC	ØØ
	†INRC	AMEND
	†MOTA	3
	†TEC	
	†TRW	
	†USS	
JAN1N3019B	†CODI	115E
	†DIC	ØØ
	†INRC	AMEND
	†MOTA	3
	†TEC	
	†TRW	
	†USS	
JAN1N3020B	†CODI	115E
	†DIC	ØØ
	ESP	AMEND
	†INRC	3
	†MOTA	
	†TEC	
	†TRW	
	†USS	
JAN1N3021B	†CODI	115E
	†DIC	ØØ
	ESP	AMEND
	†INRC	3
	†MOTA	
	†TEC	
	†TRW	
	†USS	
JAN1N3022B	†CODI	115E
	†DIC	ØØ
	ESP	AMEND
	†INRC	3
	†MOTA	
	†TEC	
	†TRW	
	†USS	
JAN1N3023B	†CODI	115E
	†DIC	ØØ
	ESP	AMEND
	†INRC	3
	†MOTA	
	†TEC	
	†TRW	
	†USS	
JAN1N3024B	†CODI	115E
	†DIC	ØØ
	ESP	AMEND
	†INRC	3
	†MOTA	
	†TEC	
	†TRW	
	†USS	
JAN1N3025B	†CODI	115E
	†DIC	ØØ
	ESP	AMEND
	†INRC	3
	†MOTA	
	†TEC	
	†TRW	
	†USS	
JAN1N3026B	†CODI	115E
	†DIC	ØØ
	ESP	AMEND
	†INRC	3
	†MOTA	
	†TEC	
	†TRW	
	†USS	
JAN1N3027B	†CODI	115E
	†DIC	ØØ
	ESP	AMEND
	†INRC	3
	†MOTA	
	†TEC	
	†TRW	
	†USS	
JAN1N3028B	†CODI	115E
	†DIC	ØØ
	ESP	AMEND
	†INRC	3
	†MOTA	
	†TEC	
	†TRW	
	†USS	
JAN1N3029B	†CODI	115E
	†DIC	ØØ
	ESP	AMEND
	†INRC	3
	†MOTA	
	†TEC	
	†TRW	
	†USS	
JAN1N3030B	†CODI	115E
	†DIC	ØØ
	ESP	AMEND
	†INRC	3
	†MOTA	
	†TEC	
	†TRW	
	†USS	
JAN1N3031B	†CODI	115E
	†DIC	ØØ
	ESP	AMEND

cont next col

TYPE No.	MFRS	MIL-S-19500/
JAN1N3031B (cont.)	†INRC	3
	†MOTA	
	†TEC	
	†TRW	
	†USS	
JAN1N3032B	†CODI	115E
	†DIC	ØØ
	ESP	AMEND
	†INRC	3
	†MOTA	
	†TEC	
	†TRW	
	†USS	
JAN1N3033B	†CODI	115E
	†DIC	ØØ
	ESP	AMEND
	†INRC	3
	†MOTA	
	†TRW	
	†USS	
JAN1N3034B	†CODI	115E
	†DIC	ØØ
	ESP	AMEND
	†INRC	3
	†MOTA	
	†TRW	
	†USS	
JAN1N3035B	†CODI	115E
	†DIC	ØØ
	ESP	AMEND
	†INRC	3
	†MOTA	
	†TRW	
	†USS	
JAN1N3036B	†CODI	115E
	†DIC	ØØ
	ESP	AMEND
	†INRC	3
	†MOTA	
	†TRW	
	†USS	
JAN1N3037B	†CODI	115E
	†DIC	ØØ
	ESP	AMEND
	†INRC	3
	†MOTA	
	†TRW	
	†USS	
JAN1N3038B	†CODI	115E
	†DIC	ØØ
	ESP	AMEND
	†INRC	3
	†MOTA	
	†TRW	
	†USS	
JAN1N3039B	†CODI	115E
	†DIC	ØØ
	ESP	AMEND
	†INRC	3
	†MOTA	
	†TRW	
	†USS	
JAN1N3040B	†CODI	115E
	†DIC	ØØ
	ESP	AMEND
	†INRC	3
	†MOTA	
	†TRW	
	†USS	
JAN1N3041B	†CODI	115E
	†DIC	ØØ
	ESP	AMEND
	†INRC	3
	†MOTA	
	†TRW	
	†USS	
JAN1N3042B	†CODI	115E
	†DIC	ØØ
	ESP	AMEND
	†INRC	3
	†MOTA	
	†TRW	
	†USS	
JAN1N3043B	†CODI	115E
	†DIC	ØØ
	ESP	AMEND
	†INRC	3
	†MOTA	
	†TRW	
	†USS	
JAN1N3044B	†CODI	115E
	†DIC	ØØ
	ESP	AMEND
	†INRC	3
	†MOTA	
	†TRW	
	†USS	
JAN1N3045B	†CODI	115E
	†DIC	ØØ
	ESP	AMEND
	†INRC	3
	†MOTA	
	†TRW	
	†USS	
JAN1N3046B	†CODI	115E
	†DIC	ØØ
	ESP	AMEND
	†INRC	3
	†MOTA	
	†TRW	

TYPE No.	MFRS	MIL-S-19500/
JAN1N3047B	†CODI	115E
	†DIC	ØØ
	ESP	AMEND
	†INRC	3
	†MOTA	
	†TRW	
JAN1N3048B	†CODI	115E
	†DIC	ØØ
	ESP	AMEND
	†INRC	3
	†MOTA	
	†TRW	
JAN1N3049B	†CODI	115E
	ESP	ØØ
	†INRC	AMEND
	†MOTA	3
	†TRW	
JAN1N3050B	†CODI	115E
	ESP	ØØ
	†INRC	AMEND
	†MOTA	3
	†TRW	
JAN1N3051B	†CODI	115E
	ESP	ØØ
	†INRC	AMEND
	†MOTA	3
	†TRW	
JAN1N3064	†FSC	144E
	†ITT	
	†RAYN	
	†TEC	
	†TSC	
JAN1N3070	†FSC	169E
	†RAYN	
	†TII	
	†TSC	
JAN1N3154	†DIC	158E
	†MOTA	ØØ
	†MSC	AMEND
	†TEC	2
	†USS	
JAN1N3155	†DIC	158E
	†MOTA	ØØ
	†MSC	AMEND
	†TEC	2
	†USS	
JAN1N3156	†DIC	158E
	†MOTA	AMEND
	†MSC	2
	†TEC	
	†USS	
JAN1N3157	†DIC	158E
	†MOTA	ØØ
	†MSC	AMEND
	†TEC	2
	†USS	
JAN1N3164,R	WESY	211A
		Ø
		AMEND
		1
JAN1N3168,R	WESY	211A
		Ø
		AMEND
		1
JAN1N3170,R	WESY	211A
		Ø§
		AMEND
		1
JAN1N3172,R	none	211A
		AMEND
		1
JAN1N3174,R	none	211A
		AMEND
		1
JAN1N3175,R	none	211A
		AMEND
		1
JAN1N3176,R	none	211A
		AMEND
		1
JAN1N3177,R	none	211A
		AMEND
		1
JAN1N3189	†GIC	155C
	†SEN	ØØ
	†TRW	NAVY
JAN1N3190	†GIC	155C
	†SEN	ØØ
	†TRW	NAVY
JAN1N3191	†GIC	155C
	†SEN	ØØ
	†TRW	NAVY
JAN1N3206	MSC	195D
JAN1N3207	MSC	230C
	TRW	AMEND
		1
JAN1N3263,R	WESY	212A
		Ø
JAN1N3267,R	WESY	212A
		Ø
JAN1N3269,R	WESY	212A
		Ø
JAN1N3271,R	none	212A
JAN1N3273,R	none	212A
JAN1N3287W	GIC	205A
	TEC	Ø
		AMEND
		1
		NAVY
JAN1N3289,R	GESY	246C
	WESY	Ø
		AMEND
		2

TYPE No.	MFRS	MIL-S-19500/
JAN1N3291,R	GESY	246C
	WESY	Ø
		AMEND
		2
JAN1N3293,R	GESY	246C
	WESY	Ø
		AMEND
		2
JAN1N3294,R	GESY	246C
	WESY	Ø
		AMEND
		2
JAN1N3295,R	GESY	246C
		Ø
		AMEND
		2
JAN1N3296,R	none	246C
		AMEND
		2
JAN1N3305B,RB		358B
	†DIC	EL
	†MOTA	
JAN1N3306B,RB		358B
	†DIC	EL
	†MOTA	
JAN1N3307B,RB		358B
	†DIC	EL
	†MOTA	
JAN1N3308B,RB		358B
	†DIC	EL
	†MOTA	
JAN1N3309B,RB		358B
	†DIC	EL
	†MOTA	
JAN1N3310B,RB		358B
	†DIC	EL
	†MOTA	
JAN1N3311B,RB		358B
	†DIC	EL
	†MOTA	
JAN1N3312B,RB		358B
	†DIC	EL
	†MOTA	
JAN1N3314B,RB		358B
	†DIC	EL
	†MOTA	
JAN1N3315B,RB		358B
	†DIC	EL
	†MOTA	
JAN1N3317B,RB		358B
	†DIC	EL
	†MOTA	
JAN1N3319B,RB		358B
	†DIC	EL
	†MOTA	
JAN1N3320B,RB		358B
	†DIC	EL
	†MOTA	
JAN1N3321B,RB		358B
	†DIC	EL
	†MOTA	
JAN1N3323B,RB		358B
	†DIC	EL
	†MOTA	
JAN1N3324B,RB		358B
	†DIC	EL
	†MOTA	
JAN1N3325B,RB		358B
	†DIC	EL
	†MOTA	
JAN1N3326B,RB		358B
	†DIC	EL
	†MOTA	
JAN1N3327B,RB		358B
	†DIC	EL
	†MOTA	
JAN1N3328B,RB		358B
	†DIC	EL
	†MOTA	
JAN1N3330B,RB		358B
	†DIC	EL
	†MOTA	
JAN1N3332B,RB		358B
	†DIC	EL
	†MOTA	
JAN1N3334B,RB		358B
	†DIC	EL
	†MOTA	
JAN1N3335B,RB		358B
	†DIC	EL
	†MOTA	
JAN1N3336B,RB		358B
	†DIC	EL
	†MOTA	
JAN1N3337B,RB		358B
	†DIC	EL
	†MOTA	
JAN1N3338B,RB		358B
	†DIC	EL
	†MOTA	
JAN1N3339B,RB		358B
	†DIC	EL
	†MOTA	
JAN1N3340B,RB		358B
	†DIC	EL
	†MOTA	
JAN1N3342B,RB		358B
	†DIC	EL
	†MOTA	
JAN1N3343B,RB		358B
	†DIC	EL
	†MOTA	

TYPE No.	MFRS	MIL-S-19500/
JAN1N3344B,RB		358B
	†DIC	EL
	†MOTA	
JAN1N3346B,RB		358B
	†DIC	EL
	†MOTA	
JAN1N3347B,RB		358B
	†DIC	EL
	†MOTA	
JAN1N3349B,RB		358B
	†DIC	EL
	†MOTA	
JAN1N3350B,RB		358B
	†DIC	EL
	†MOTA	
JAN1N3595	FSC	241A
	RAYN	Ø
		AMEND
		2
		NAVY
JAN1N3600	†FSC	231C
	ITT	ØØ
	†TEC	AMEND
	†TSC	1
JAN1N3611	†MSC	228E
	†SET	Ø
	†UNI	AMEND
		1
JAN1N3612	†MSC	228E
	†SET	Ø
	†UNI	AMEND
		1
JAN1N3613	†MSC	228E
	†SET	Ø
	†UNI	AMEND
		1
JAN1N3614	†MSC	228E
	†SET	Ø
	†UNI	AMEND
		1
JAN1N3643	none	279B
		Ø
		NAVY
JAN1N3644	SET	279B
		Ø
		NAVY
JAN1N3645	SET	279B
		Ø
		NAVY
JAN1N3646	SET	279B
		Ø
		NAVY
JAN1N3647	SET	279B
		Ø
		NAVY
JAN1N3649,R	EDI	104C
	SOD	Ø§
JAN1N3650,R	EDI	104C
	SOD	Ø
JAN1N3655A,AM,AMR		334
	ALP	
	MIC	
JAN1N3666-1	GIC	226A
	ITT	NAVY
	TEC	
JAN1N3666-2	GIC	226A
	ITT	NAVY
	TEC	
JAN1N3671A	†none	260A
	SOD	ØØ
JAN1N3673A	†none	260A
	SOD	ØØ
JAN1N3713	GESY	269
		Ø
		AMEND
		1
		NAVY
JAN1N3715	GESY	269
		Ø
		AMEND
		1
		NAVY
JAN1N3717	GESY	269
		Ø
		AMEND
		1
		NAVY
JAN1N3719	GESY	269
		Ø
		AMEND
		1
		NAVY
JAN1N3721	GESY	269
		Ø
		AMEND
		1
		NAVY
JAN1N3747W,WM,WMR		281A
	ALP	
	MIC	
JAN1N3766,R	†none	297A
		Ø
JAN1N3768,R	†none	297A
		Ø
JAN1N3821A	†CODI	115E
	†DIC	ØØ
	INRC	AMEND
	†MOTA	3
	†USS	
JAN1N3822A	†CODI	115E
	†DIC	ØØ
	INRC	AMEND

cont.next page

† - Qualification included TX Devices

§ - NATO
Ø - USAF Preferred (TX Type Only)
Ø - Mil-Std-701 Device

13. TYPES WITH U.S. MILITARY SPECIFICATIONS

IN TYPE NUMBER SEQUENCE

TYPE No.	MFRS	MIL-S-19500/
JAN1N3822A (cont.)	†MOTA	3
	†USS	
JAN1N3823A	†CODI	115E
	†DIC	ØØ
	INRC	AMEND
	†MOTA	3
	†USS	
JAN1N3824A	†CODI	115E
	†DIC	ØØ
	INRC	AMEND
	†MOTA	3
	†USS	
JAN1N3825A	†CODI	115E
	†DIC	ØØ
	INRC	AMEND
	†MOTA	3
	†USS	
JAN1N3826A	†CODI	115E
	†DIC	ØØ
	INRC	AMEND
	†MOTA	3
	†USS	
JAN1N3827A	†CODI	115E
	†DIC	ØØ
	INRC	AMEND
	†MOTA	3
	†USS	
JAN1N3828A	†CODI	115E
	†DIC	ØØ
	INRC	AMEND
	†MOTA	3
	†USS	
JAN1N3875	none	266B
		EL
JAN1N3876	none	266B
		EL
JAN1N3878	none	266B
		EL
JAN1N3880,R	DIC	266B
	GESY	EL
	WESY	
JAN1N3881,R	DIC	266B
	GESY	EL
	WESY	
JAN1N3883,R	DIC	266B
	GESY	EL
	WESY	
JAN1N3885	†none	304A
		ØØ
		AMEND
		2
JAN1N3886	†none	304A
		ØØ
		AMEND
		2
JAN1N3888	†none	304A
		ØØ
		AMEND
		2
JAN1N3890,R	†DIC	304A
	†EDI	ØØ
	†GESY	AMEND
	†WESY	2
JAN1N3891,R	†DIC	304A
	†EDI	ØØ
	†GESY	AMEND
	†WESY	2
JAN1N3893,R	†DIC	304A
	†EDI	AMEND
	†GESY	2
	†WESY	
JAN1N3909,R	†none	308A
	GESY	AMEND
	WESY	1
JAN1N3910,R	†none	308A
	GESY	Ø
	WESY	AMEND
		1
JAN1N3911,R	†none	308A
	GESY	Ø
	WESY	AMEND
		1
JAN1N3912,R	†none	308A
	GESY	AMEND
		1
JAN1N3913,R	†none	308A
	GESY	Ø
		AMEND
		1
JAN1N3957	†MSC	228E
	†SET	Ø
		AMEND
		1
JAN1N3992	none	279B
		NAVY
JAN1N3993A,RA		272C
	†DIC	ØØ
	INRC	AMEND
	†MOTA	1
JAN1N3994A,RA		272C
	†DIC	ØØ
	INRC	AMEND
	†MOTA	1
JAN1N3995A,RA		272C
	†DIC	ØØ
	INRC	AMEND
	†MOTA	1
JAN1N3996A,RA		272C
	†DIC	ØØ
	INRC	AMEND
	†MOTA	1
JAN1N3997A,RA		272C
	†DIC	ØØ
	INRC	AMEND
	†MOTA	1
JAN1N3998A,RA		272C
	†DIC	ØØ
	INRC	AMEND
	†MOTA	1
JAN1N3999A,RA		272C
	†DIC	ØØ
	INRC	AMEND
	†MOTA	1
JAN1N4000A,RA		272C
	†DIC	ØØ
	INRC	AMEND
	†MOTA	1
JAN1N4087		275A
		Ø
		AMEND
		1
JAN1N4099	†none	435
JAN1N4100	†none	435
JAN1N4101	†none	435
JAN1N4102	†none	435
JAN1N4103	†none	435
JAN1N4104	†none	435
JAN1N4105	†none	435
JAN1N4106	†none	435
JAN1N4107	†none	435
JAN1N4108	†none	435
JAN1N4109	†none	435
JAN1N4110	†none	435
JAN1N4111	†none	435
JAN1N4112	†none	435
JAN1N4113	†none	435
JAN1N4114	†none	435
JAN1N4115	†none	435
JAN1N4116	†none	435
JAN1N4117	†none	435
JAN1N4118	†none	435
JAN1N4119	†none	435
JAN1N4120	†none	435
JAN1N4121	†none	435
JAN1N4122	†none	435
JAN1N4123	†none	435
JAN1N4124	†none	435
JAN1N4125	†none	435
JAN1N4126	†none	435
JAN1N4127	†none	435
JAN1N4128	†none	435
JAN1N4129	†none	435
JAN1N4130	†none	435
JAN1N4131	†none	435
JAN1N4132	†none	435
JAN1N4133	†none	435
JAN1N4134	†none	435
JAN1N4135	†none	435
JAN1N4148	†FSC	116E
	†GESY	ØØ
	†GIC	
	†ITT	
	†TEC	
	†TII	
	†TSC	
JAN1N4150	†ITT	231C
		ØØ
		AMEND
		1
JAN1N4153	GESY	337C
	†ITT	ØØ
	†TII	
JAN1N4245	GESY	286C
	†MSC	ØØ
	†SET	AMEND
	SOD	1
	UNI	
JAN1N4246	GESY	286C
	†MSC	ØØ
	†SET	AMEND
	SOD	1
	UNI	
JAN1N4247	GESY	286C
	†GIC	ØØ
	†MSC	AMEND
	†SET	1
	SOD	
	UNI	
JAN1N4248	†MSC	286C
	†SET	ØØ
	SOD	AMEND
		1
JAN1N4249	†MSC	286C
	†SET	ØØ
	SOD	AMEND
		1
JAN1N4258B	none	387
		EL
JAN1N4259B	none	387
		EL
JAN1N4260B	none	387
		EL
JAN1N4261B	none	387
		EL
JAN1N4262B	none	387
		EL
JAN1N4263B	none	387
		EL
JAN1N4264B	none	387
		EL
JAN1N4265B	none	387
		EL
JAN1N4266B	none	387
		EL
JAN1N4267B	none	387
		EL
JAN1N4268B	none	387
		EL
JAN1N4269B	none	387
		EL
JAN1N4270B	none	387
		EL
JAN1N4271B	none	387
		EL
JAN1N4272B	none	387
		EL
JAN1N4273B	none	387
		EL
JAN1N4274B	none	387
		EL
JAN1N4275B	none	387
		EL
JAN1N4276B	none	387
		EL
JAN1N4277B	none	387
		EL
JAN1N4278B	none	387
		EL
JAN1N4279B	none	387
		EL
JAN1N4280B	none	387
		EL
JAN1N4281B	none	387
		EL
JAN1N4282B	none	387
		EL
JAN1N4283B	none	387
		EL
JAN1N4284B	none	387
		EL
JAN1N4285B	none	387
		EL
JAN1N4286B	none	387
		EL
JAN1N4287B	none	387
		EL
JAN1N4288B	none	387
		EL
JAN1N4289B	none	387
		EL
JAN1N4290B	none	387
		EL
JAN1N4291B	none	387
		EL
JAN1N4292B	none	387
		EL
JAN1N4293B	none	387
		EL
JAN1N4306	FSC	278A
	GESY	Ø
		AMEND
		1
		NAVY
JAN1N4307	FSC	284A
	GESY	Ø
		AMEND
		1
		NAVY
JAN1N4370A	†DIC	127E
	†INRC	ØØ
	†MOTA	AMEND
	†TII	2
	†TRW	
	†TSC	
JAN1N4371A	†DIC	127E
	†INRC	ØØ
	†MOTA	AMEND
	†TII	2
	†TRW	
	†TSC	
	†USS	
JAN1N4372A	†DIC	127E
	†INRC	ØØ
	†MOTA	AMEND
	†TEC	2
	†TII	
	†TRW	
	†TSC	
	†USS	
JAN1N4376	FSC	282A
		Ø
JAN1N4383	†none	365A
	GIC	AMEND
		1
		NAVY
JAN1N4384	†none	365A
	GIC	AMEND
		1
		NAVY
JAN1N4385	†none	365A
	GIC	AMEND
		1
		NAVY
JAN1N4386	none	333
		NAVY
JAN1N4387	none	333
		NAVY
JAN1N4388	none	333
		NAVY
JAN1N4454	†FSC	144E
	†GESY	ØØ
	†GIC	
	†ITT	
	†TEC	
	†TII	
	†TSC	
JAN1N4458,R	SOD	162B
		AMEND
		3
JAN1N4459,R	GESY	162B
	SOD	AMEND
		3
JAN1N4460	†MSC	406
		AMEND
		1
		USAF
JAN1N4461	†MSC	406
		AMEND
		1
		USAF
JAN1N4462	†MSC	406
		AMEND
		1
		USAF
JAN1N4463	†MSC	406
		AMEND
		1
		USAF
JAN1N4464	†MSC	406
		AMEND
		1
		USAF
JAN1N4465	†MSC	406
		AMEND
		1
		USAF
JAN1N4466	†MSC	406
		AMEND
		1
		USAF
JAN1N4467	†MSC	406
		AMEND
		1
		USAF
JAN1N4468	†MSC	406
		AMEND
		1
		USAF
JAN1N4469	†MSC	406
		AMEND
		1
		USAF
JAN1N4470	†MSC	406
		AMEND
		1
		USAF
JAN1N4471	†MSC	406
		AMEND
		1
		USAF
JAN1N4472	†MSC	406
		AMEND
		1
		USAF
JAN1N4473	†MSC	406
		AMEND
		1
		USAF
JAN1N4474	†MSC	406
		AMEND
		1
		USAF
JAN1N4475	†MSC	406
		AMEND
		1
		USAF
JAN1N4476	†MSC	406
		AMEND
		1
		USAF
JAN1N4477	†MSC	406
		AMEND
		1
		USAF
JAN1N4478	†none	406
		AMEND
		1
		USAF
JAN1N4479	†none	406
		AMEND
		1
		USAF
JAN1N4480	†none	406
		AMEND
		1
		USAF
JAN1N4481	†none	406
		AMEND
		1
		USAF
JAN1N4482	†none	406
		AMEND
		1
		USAF
JAN1N4483	†none	406
		AMEND
		1
		USAF
JAN1N4484	†none	406
		AMEND
		1
		USAF
JAN1N4485	†none	406
		AMEND
		1
		USAF
JAN1N4486	†none	406
		AMEND
		1
		USAF
JAN1N4487	†none	406
		AMEND
		1
		USAF
JAN1N4488	†none	406
		AMEND
		1
		USAF
JAN1N4489	†none	406
		AMEND
		1
		USAF
JAN1N4490	†none	406
		AMEND
		1
		USAF
JAN1N4491	†none	406
		AMEND
		1
		USAF
JAN1N4492	†none	406
		AMEND
		1
		USAF
JAN1N4493	†none	406
		AMEND
		1
		USAF
JAN1N4494	†none	406
		AMEND
		1
		USAF
JAN1N4495	†none	406
		AMEND
		1
		USAF
JAN1N4496	†none	406
		AMEND
		1
		USAF
JAN1N4500	†none	403
		USAF
JAN1N4531	†GESY	116E
	†ITT	ØØ
	†TII	
JAN1N4532	†TII	144E
	†TSC	ØØ
JAN1N4534	†none	337C
		ØØ
JAN1N4549B,RB		358B
	†DIC	EL
	†MOTA	
JAN1N4550B,RB		358B
	†DIC	EL
	†MOTA	
JAN1N4551B,RB		358B
	†DIC	EL
	†MOTA	
JAN1N4552B,RB		358B
	†DIC	EL
	†MOTA	
JAN1N4553B,RB		358B
	†DIC	EL
	†MOTA	
JAN1N4554B,RB		358B
	†DIC	EL
	†MOTA	
JAN1N4585	†none	365A
	GIC	AMEND
		1
		NAVY
JAN1N4586	†none	365A
	GIC	AMEND
		1
		NAVY
JAN1N4614	†none	435
JAN1N4615	†none	435
JAN1N4616	†none	435
JAN1N4617	†none	435
JAN1N4618	†none	435
JAN1N4619	†none	435
JAN1N4620	†none	435
JAN1N4621	†none	435
JAN1N4622	†none	435
JAN1N4623	†none	435
JAN1N4624	†none	435
JAN1N4625	†none	435
JAN1N4626	†none	435
JAN1N4627	†none	435
JAN1N4801A,B	TRW	329B
		Ø
		EL
JAN1N4802A,B	TRW	329B
		Ø
		EL
JAN1N4803A,B	TRW	329B
		Ø
		EL
JAN1N4804A,B	TRW	329B
		Ø
		EL
JAN1N4805A,B	TRW	329B
		Ø
		EL
JAN1N4806A,B	TRW	329B
		Ø
		EL

† - Qualification included TX Devices

§ - NATO
Ø - USAF Preferred (TX Type Only)
Ø - Mil-Std-701 Device

13. TYPES WITH U.S. MILITARY SPECIFICATIONS

IN TYPE NUMBER SEQUENCE

TYPE No.	MFRS	MIL-S-19500/
JAN1N4807A,B	TRW	329B Ø EL
JAN1N4808A,B	TRW	329B Ø EL
JAN1N4809A,B	TRW	329B Ø EL
JAN1N4810A,B	TRW	329B Ø EL
JAN1N4811A,B	TRW	329B Ø EL
JAN1N4812A,B	TRW	329B Ø EL
JAN1N4813A,B	TRW	329B Ø EL
JAN1N4814A,B	TRW	329B Ø EL
JAN1N4815A,B	CRY TRW	329B Ø EL
JAN1N4938	†TII †TSC	169E ØØ
JAN1N4942	†MSC †SET †UNI	359B ØØ AMEND 1
JAN1N4944	†MSC †SET †UNI	359B ØØ AMEND 1
JAN1N4946	†MSC †SET †UNI	359B ØØ AMEND 1
JAN1N4947	†MSC †SET	359B ØØ AMEND 1
JAN1N4948	†MSC †SET	359B ØØ AMEND 1
JAN1N4954	†MSC UNI	356B ØØ
JAN1N4955	†MSC †UNI	356B ØØ
JAN1N4956	†MSC †UNI	356B ØØ
JAN1N4957	†MSC †UNI	356B ØØ
JAN1N4958	†MSC †UNI	356B ØØ
JAN1N4959	†MSC †UNI	356B ØØ
JAN1N4960	†MSC †UNI	356B ØØ
JAN1N4961	†MSC †UNI	356B ØØ
JAN1N4962	†MSC †UNI	356B ØØ
JAN1N4963	†MSC †UNI	356B ØØ
JAN1N4964	†MSC †UNI	356B ØØ
JAN1N4965	†MSC †UNI	356B ØØ
JAN1N4966	†MSC †UNI	356B ØØ
JAN1N4967	†MSC †UNI	356B ØØ
JAN1N4968	†MSC †UNI	356B ØØ
JAN1N4969	†MSC †UNI	356B ØØ
JAN1N4970	†UNI	356B ØØ
JAN1N4971	†UNI	356B ØØ
JAN1N4972	†UNI	356B ØØ
JAN1N4973	†UNI	356B ØØ
JAN1N4974	†UNI	356B ØØ
JAN1N4975	†UNI	356B ØØ
JAN1N4976	†UNI	356B ØØ
JAN1N4977	†UNI	356B ØØ
JAN1N4978	†UNI	356B ØØ
JAN1N4979	†UNI	356B ØØ
JAN1N4980	†UNI	356B ØØ
JAN1N4981	†UNI	356B ØØ
JAN1N4982	†UNI	356B ØØ
JAN1N4983	†UNI	356B ØØ
JAN1N4984	†UNI	356B ØØ
JAN1N4985	†UNI	356B ØØ

TYPE No.	MFRS	MIL-S-19500/
JAN1N4986	†UNI	356B ØØ
JAN1N4987	†UNI	356B ØØ
JAN1N4988	†UNI	356B ØØ
JAN1N4989	†UNI	356B ØØ
JAN1N4990	†UNI	356B ØØ
JAN1N4991	†UNI	356B ØØ
JAN1N4992	†UNI	356B ØØ
JAN1N4993	†UNI	356B ØØ
JAN1N4994	†UNI	356B ØØ
JAN1N4995	†UNI	356B ØØ
JAN1N4996	†none	356B ØØ
JAN1N5139A	CODI †CRY †KSC	383 ØØ AMEND 2
JAN1N5140A	CODI †CRY †KSC	383 ØØ AMEND 2
JAN1N5141A	CODI †CRY †KSC	383 ØØ AMEND 2
JAN1N5142A	CODI †CRY †KSC	383 ØØ AMEND 2
JAN1N5143A	CODI †CRY †KSC	383 ØØ AMEND 2
JAN1N5144A	CODI †CRY †KSC	383 ØØ AMEND 2
JAN1N5145A	CODI †CRY †KSC	383 ØØ AMEND 2
JAN1N5146A	CODI †CRY †KSC	383 ØØ AMEND 2
JAN1N5147A	CODI †CRY †KSC	383 ØØ AMEND 2
JAN1N5148A	CODI †CRY †KSC	383 ØØ AMEND 2
JAN1N5165	†none	401 ØØ
JAN1N5181	†none	389 ØØ AMEND 1 EL
JAN1N5182	†none	389 ØØ AMEND 1 EL
JAN1N5183	†none	389 ØØ AMEND 1 EL
JAN1N5184	†none	389 ØØ AMEND 1 EL
JAN1N5186	†none	424 AMEND 1
JAN1N5187	†none	424 AMEND 1
JAN1N5188	†none	424 AMEND 1
JAN1N5190	†none	424 AMEND 1
JAN1N5194	†none	118C ØØ AMEND 1
JAN1N5195	†none	118C ØØ AMEND 1
JAN1N5196	†none	118C ØØ AMEND 1
JAN1N5197	†none	367 AMEND 2

TYPE No.	MFRS	MIL-S-19500/
JAN1N5198	†none SEN SET UNI	367 AMEND 2 USAF
JAN1N5199	†none SEN SET UNI	367 AMEND 2 USAF
JAN1N5200	†none SEN SET UNI	367 AMEND 2 USAF
JAN1N5201	†none SEN SET UNI	367 AMEND 2 USAF
JAN1N5282	†none	377 ØØ AMEND 2 USAF
JAN1N5317	†none	377 ØØ AMEND 2 USAF
JAN1N5415	†SET	411 AMEND 3 EL
JAN1N5416	†SET	411 AMEND 3 EL
JAN1N5417	†SET	411 AMEND 3 EL
JAN1N5418	†SET	411 AMEND 3 EL
JAN1N5419	†SET	411 AMEND 3 EL
JAN1N5420	†none	411 AMEND 3 EL
JAN1N5461B	†none	436 USAF
JAN1N5462B	†none	436 USAF
JAN1N5463B	†none	436 USAF
JAN1N5464B	†none	436 USAF
JAN1N5465B	†none	436 USAF
JAN1N5466B	†none	436 USAF
JAN1N5467B	†none	436 USAF
JAN1N5468B	†none	436 USAF
JAN1N5469B	†none	436 USAF
JAN1N5470B	†none	436 USAF
JAN1N5471B	†none	436 USAF
JAN1N5472B	†none	436 USAF
JAN1N5473B	†none	436 USAF
JAN1N5474B	†none	436 USAF
JAN1N5475B	†none	436 USAF
JAN1N5476B	†none	436 USAF
JAN1N5477	none	418
JAN1N5478	none	418
JAN1N5479	none	418
JAN1N5480	none	418
JAN1N5481	none	418
JAN1N5482	none	417
JAN1N5483	none	417
JAN1N5484	none	417
JAN1N5485	none	417
JAN1N5518B	†none	437 USAF
JAN1N5519B	†none	437 USAF
JAN1N5520B	†none	437 USAF
JAN1N5521B	†none	437 USAF
JAN1N5522B	†none	437 USAF
JAN1N5523B	†none	437 USAF
JAN1N5524B	†none	437 USAF
JAN1N5525B	†none	437 USAF
JAN1N5526B	†none	437 USAF
JAN1N5527B	†none	437 USAF
JAN1N5528B	†none	437 USAF

TYPE No.	MFRS	MIL-S-19500/
JAN1N5529B	†none	437 USAF
JAN1N5530B	†none	437 USAF
JAN1N5531B	†none	437 USAF
JAN1N5532B	†none	437 USAF
JAN1N5533B	†none	437 USAF
JAN1N5534B	†none	437 USAF
JAN1N5535B	†none	437 USAF
JAN1N5536B	†none	437 USAF
JAN1N5537B	†none	437 USAF
JAN1N5538B	†none	437 USAF
JAN1N5539B	†none	437 USAF
JAN1N5540B	†none	437 USAF
JAN1N5541B	†none	437 USAF
JAN1N5542B	†none	437 USAF
JAN1N5543B	†none	437 USAF
JAN1N5544B	†none	437 USAF
JAN1N5545B	†none	437 USAF
JAN1N5546B	†none	437 USAF
JAN1N5550	†SET	420 AMEND 3 USAF
JAN1N5551	†SET	420 AMEND 3 USAF
JAN1N5552	†SET	420 AMEND 3 USAF
JAN1N5553	†SET	420 AMEND 3 USAF
JAN1N5554	†SET	420 AMEND 3 USAF
JAN1N5555	†none	434 AMEND 2
JAN1N5556	†none	434 AMEND 2
JAN1N5557	†none	434 AMEND 2
JAN1N5558	†none	434 AMEND 2
JAN1N5610	†none	434 AMEND 2
JAN1N5611	†none	434 AMEND 2
JAN1N5612	†none	434 AMEND 2
JAN1N5613	†none	434 AMEND 2
JAN1N5614	†SET	427 AMEND 1 EL
JAN1N5615	†SET	429 AMEND 1 EL
JAN1N5616	†SET	427 AMEND 1 EL
JAN1N5617	†SET	429 AMEND 1 EL
JAN1N5618	†SET	427 AMEND 1 EL
JAN1N5619	†SET	429 AMEND 1 EL
JAN1N5620	†SET	427 AMEND 1 EL
JAN1N5621	†SET	429 AMEND 1 EL

TYPE No.	MFRS	MIL-S-19500/
JAN1N5622	†SET	427 AMEND 1 EL
JAN1N5623	†SET	429 AMEND 1 EL
JAN1N5624	†none	432 USAF
JAN1N5625	†none	432 USAF
JAN1N5626	†none	432 USAF
JAN1N5627	†none	432 USAF
JAN2N682	GESY INRC TRW	108C Ø AMEND 1
JAN2N683	GESY INRC TRW	108C Ø AMEND 1
JAN2N685	GESY INRC TRW	108C Ø AMEND 1
JAN2N686	GESY INRC TRW	108C Ø AMEND 1
JAN2N687	GESY INRC TRW	108C Ø AMEND 1
JAN2N688	GESY INRC TRW	108C Ø AMEND 1
JAN2N689	GESY INRC TRW	108C Ø AMEND 1
JAN2N690	INRC	108C Ø AMEND 1
JAN2N691	INRC	108C Ø AMEND 1
JAN2N692	INRC	108C Ø AMEND 1
JAN2N1771A	†GESY TEC	168C ØØ NAVY
JAN2N1772A	†GESY TEC	168C ØØ NAVY
JAN2N1774A	†GESY TEC	168C ØØ NAVY
JAN2N1776A	†GESY TEC	168C ØØ NAVY
JAN2N1777A	†GESY TEC	168C ØØ NAVY
JAN2N1792	GESY INRC	204C AMEND 1 NAVY
JAN2N1793	GESY INRC	204C AMEND 1 NAVY
JAN2N1795	GESY INRC	204C AMEND 1 NAVY
JAN2N1797	INRC	204C AMEND 1 NAVY
JAN2N1798	GESY INRC	204C AMEND 1 NAVY
JAN2N1799	INRC	204C AMEND 1 NAVY
JAN2N1800	INRC	204C AMEND 1 NAVY
JAN2N1805	INRC	204C AMEND 1 NAVY
JAN2N1806	INRC	204C AMEND 1 NAVY
JAN2N1870A	TEC UNI	198A AMEND 1 NAVY

† - Qualification included TX Devices

§ - NATO
⍁ - USAF Preferred (TX Type Only)
Ø - Mil-Std-701 Device

13. TYPES WITH U.S. MILITARY SPECIFICATIONS

IN TYPE NUMBER SEQUENCE

TYPE No.	MFRS	MIL-S-19500/
JAN2N1871A	TEC UNI	198A Ø AMEND 1 NAVY
JAN2N1872A	TEC UNI	198A Ø AMEND 1 NAVY
JAN2N1874A	TEC UNI	198A Ø AMEND 1 NAVY
JAN2N1910	GESY INRC	204C Ø AMEND 1 NAVY
JAN2N1911	GESY INRC	204C Ø AMEND 1 NAVY
JAN2N1913	GESY INRC	204C Ø AMEND 1 NAVY
JAN2N1915	GESY INRC	204C Ø AMEND 1 NAVY
JAN2N1916	GESY INRC	204C Ø AMEND 1 NAVY
JAN2N2024	none	203C Ø NAVY
JAN2N2025	none	203C Ø NAVY
JAN2N2027	none	203C Ø NAVY
JAN2N2029	none	203C Ø NAVY
JAN2N2030	none	203C Ø NAVY
JAN2N2031	GESY INRC	204C AMEND 1 NAVY
JAN2N2323	GESY †TEC †UNI	276A ØØ AMEND 1 NAVY
JAN2N2323A	GESY †TEC †UNI	276A ØØ AMEND 1 NAVY
JAN2N2324	†GESY †TEC †UNI	276A ØØ AMEND 1 NAVY
JAN2N2324A	†GESY †TEC †UNI	276A ØØ AMEND 1 NAVY
JAN2N2326	GESY †TEC †UNI	276A ØØ AMEND 1 NAVY
JAN2N2326A	GESY †TEC †UNI	276A ØØ AMEND 1 NAVY
JAN2N2328	†TEC †UNI	276A ØØ AMEND 1 NAVY
JAN2N2328A	†TEC †UNI	276A ØØ AMEND 1 NAVY
JAN2N2329	†TEC †UNI	276A ØØ AMEND 1 NAVY
JAN2N3027	†UNI	419 AMEND 1 EL
JAN2N3028	†UNI	419 AMEND 1 EL
JAN2N3029	†UNI	419 AMEND 1 EL
JAN2N3030	†UNI	419 AMEND 1 EL
JAN2N3031	†UNI	419 AMEND 1 EL
JAN2N3032	†UNI	419 AMEND 1 EL
JAN2N3091	INRC	280 AMEND 3 NAVY
JAN2N3093	INRC	280 AMEND 3 NAVY
JAN2N3095	INRC	280 AMEND 3 NAVY
JAN2N3097	INRC	280 AMEND 3 NAVY
JAN2N3098	none	280 AMEND 3 NAVY
JAN2N3099	none	280 AMEND 3 NAVY
JAN2N3101	none	280 AMEND 3 NAVY
JAN2N3103	none	280 AMEND 3 NAVY
JAN2N3105	none	280 AMEND 3 NAVY
JAN2N3106	none	280 AMEND 3 NAVY
JAN2N4199	MOTA	372A AMEND 4 EL
JAN2N4200	MOTA	372A AMEND 4 EL
JAN2N4201	MOTA	372A AMEND 4 EL
JAN2N4202	MOTA	372A AMEND 4 EL
JAN2N4203	MOTA	372A AMEND 4 EL
JAN2N4204	MOTA	372A AMEND 4 EL
JAN2N4205	none	372A AMEND 4 EL
JAN2N4206	none	372A AMEND 4 EL
JAN2N5806	none	438
JAN2N5807	none	438
JAN2N5808	none	438
JAN2N5809	none	438
JAN3N81	none	386 NAVY
JAN3N82	none	386 NAVY
JAN3N86	none	386 NAVY

TYPE No.	MFRS	MIL-S-38103/
USAF120ES471P	none	120B USAF
USAF120ES476P	none	120B USAF

TYPE No.	MFRS	MIL-S-55191/
USA55191/1	none	1 EL
USA55191/2	none	2 EL
USA55191/3-1	none	3 EL
USA55191/3-2	none	3 EL
USA55191/4	none	4

DEPARTMENT OF DEFENSE, INDEX of Specifications and Standards dated 1 January 1971

DEVICE MANUFACTURERS
Qualifications on Test Reference Letter.

MIL–S–19500E Military Specification, General Specification for Semiconductor Devices dated 1 April 1968, Supplement 1C dated 6 May 1970, Amendment 3 dated 23 October 1970.

MIL–S–380138 (USAF) Military Specifications, General Specifications for Established Reliability Semiconductor Devices dated 1 June 1964.

MIL–S55191 (EL) Military Specification, General Specification for Semiconductor (Micro-Elements) dated 7 May 1963 and Supplement 1 dated 7 May 1963.

MIL–STD–701G Military Standard, List of Standard Semiconductor Devices dated 9 October 1967 and Notice 4 dated 30 December 1969.

QPL–19500–41 Qualified Products List of Products Qualified Under Military Specification MIL–S–19500 dated 21 September 1970.

NOTE: The military reverse-polarity types have the suffix, "R", only when so specified by the military detail specification. The technical sections, in these cases, do not reflect the polarity differences.

† - Qualification included TX Devices

§ - NATO
Ø - USAF Preferred (TX Type Only)
Ø - Mil-Std-701 Device

THE PREFIX LETTERS OF THE OUTLINE DRAWING NUMBERS INDICATE THE FOLLOWING:

- **A** – AXIAL LEAD Type
- **C** – CASE Type
- **DO** – JEDEC Type
- **F** – FUSE Type
- **L** – MULTIPLE LEAD Type
- **M** – MISCELLANEOUS Type
- **P** – PLUG-IN Type
- **S** – SCREW BASE Type
- **TO** – JEDEC Type
- **Z** – DRAWING REFERENCE INFORMATION

NOTES:

These outline drawings are intended as a guide for the user. They should not be used for construction purposes without first checking with the appropriate manufacturer.

These drawings are referenced in the Technical Sections of this **D.A.T.A.BOOK** in accordance with information supplied by the manufacturers.

The DO and TO drawings have been reproduced from JEDEC Publication No. 12E (May 1964) with the permission of the National Electrical Manufacturer's Association — Electronic Industries Associates. JEDEC designations are assigned only to outlines submitted by the JS-10 Committee on Mechanical Standardization. The procedure of assigning and announcing the JEDEC designation constitutes registration.

All drawing have circular symmetry unless indicated.

A1

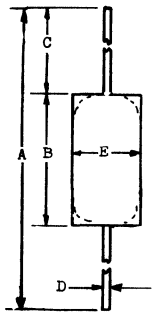

MAY SHOW COLOR BANDS TO DENOTE POLARITY.

	A	B	C	D	E	CHAMFERED EDGES
A1		.300 MAX	1.00 MIN	.018 .022	.125 .150	NO
A1a			1.57 MIN	.020 MAX	.312	NO
A1b		.031	1.50 MIN	.250	1.25	NO
A1c		.068 MAX	.450 MIN	.008 .012	.042 MAX	YES
A1d		.100 MAX	.500 MIN	.016	.100 MAX	OPTIONAL
A1e		.100	1.25 MIN	.020	.060	OPTIONAL
A1f		.185 .200	1.00	.040	.100 .128	NO
A1h		.110	1.00 MIN	.022	.065	NO
A1j		.120	1.00 MIN	.022 MAX	.065 MAX	YES
A1k		.125	1.00 MIN	.020	.060	OPTIONAL
A1m		.150	.400	.010	.060	NO
A1n		.150 .170	1.08 MIN	.022	.106	YES
A1p		.155 MAX	.750 MIN	.020	.085 MAX	NO
A1q		.155 MAX	.750 MIN	.036	.085 MAX	NO
A1r		.155 MAX	.750 MIN	.036	.095 MAX	NO
A1v		.160 MAX	.800 MIN	.022 MAX	.085 MAX	YES
A1w		.160	1.00	.032	.085	NO
A1x		.160 MAX	1.00 MIN	.036	.085 MAX	NO
A1y		.160 MAX	1.125 MIN	.020	.080 MAX	YES
A1z		.160	1.13 MIN	.020	.062	NO
A1aa		.162 MAX	1.00 MIN	.022	.075 MAX	YES
A1ac		.165 MAX	1.00 MIN	.015	.075 MAX	YES
A1ad		.165	1.00 1.50	.016	.075	YES
A1ae		.169 MAX	1.00 MIN	.022	.075 MAX	YES
A1ag		.170 MAX	1.00 MIN	.014 .016	.070 MAX	YES
A1ah		.170 MAX	1.00 MIN	.016 MAX	.076 MAX	YES
A1ak		.175 MAX	1.00 MIN	.015	.075 MAX	NO
A1am		.175 MAX	1.00	.016	.075	NO
A1an		.177 MAX	1.00 MIN	.022	.075 MAX	YES
A1ap		.180 MAX	1.00 MIN	.022 MAX	.075 MAX	YES
A1aq		.180 MAX	1.00 MIN	.022 MAX	.080 MAX	NO
A1ar		.180 MAX	1.00 MIN	.016	.078 MAX	YES
A1as		.185 MAX	.750 MIN	.018	.085 MAX	NO
A1at		.185 MAX	1.00 MIN	.020	.075 MAX	NO
A1au		.190 MAX	1.00 MIN	.015	.073 MAX	YES
A1av		.190 MAX	1.00 MIN	.022 MAX	.080 MAX	NO
A1ax		.205 MAX	1.00 MIN	.033	.128 MAX	YES
A1ay		.205 MAX	1.10 MIN	.030 .034	.100 .107	YES

	A	B	C	D	E	CHAMFERED EDGES
A1az		.205 MAX	1.10 MIN	.030 .034	.100 .128	YES
A1ba		.205 MAX	1.10 MIN	.034	.107 MAX	YES
A1bb		.225	1.00 MIN	.031	.135	OPTIONAL
A1bc		.225	1.25 MIN	.032	.120	NO
A1bf		.236	.196 MIN	.015	.078	NO
A1bg		.240 .250	1.25 MIN	.032	.120 MAX	NO
A1bh		.250	1.00 MIN	.020	.106	OPTIONAL
A1bj		.250	1.00 MIN	.020	.125	OPTIONAL
A1bk		.250 MAX	1.00 MIN	.028	.095 MAX	YES
A1bn		.250	1.00 MIN	.040	.110	OPTIONAL
A1bp		.250 .400	1.00 MIN	.026 .030	.106 .120	NO
A1br		.250	1.25 MIN	.030	.200	NO
A1bs		.250	1.25 MIN	.031	.135	OPTIONAL
A1bu		.255 MAX	1.00 MIN	.031	.140 MAX	YES
A1bv		.256 MAX	.985 MIN	.032 MAX	.138 MAX	YES
A1bw		.260	1.00 MIN	.020	.118	YES
A1bx		.265 MAX	1.00		.120	NO
A1by		.265 MAX	1.00 MIN	.020	.095 MAX	YES
A1bz		.265 MAX	1.00	.020	.105	NO
A1cb		.270 MAX	1.10 MIN	.020	.098 MAX	YES
A1cd		.271	1.114 MIN	.030	.098	NO
A1ce		.275 MAX	1.00 MIN	.020	.105 MAX	YES
A1cf		.275 MAX	1.00 MIN	.032 MAX	.145 MAX	YES
A1cg		.275	1.13 MIN	.033	.145	OPTIONAL
A1ch		.275	1.19 MIN	.031	.135	OPTIONAL
A1cj		.275 MAX	1.25	.020	.105 MAX	YES
A1ck		.281	1.00 MIN	.030	.110	OPTIONAL
A1cm		.281	1.00 MIN	.040	.110	OPTIONAL
A1cn		.281	1.25 MIN	.030	.110	OPTIONAL
A1cp		.283 MAX	.984 MIN	.020	.125 MAX	YES
A1cq		.283 MAX	1.02 MIN	.020	.122 MAX	YES
A1cs		.285 MAX	1.125	.020	.125	NO
A1ct		.287 MAX	1.18 MAX	.015	.102	YES
A1cu		.299	1.10 MIN	.019	.106	OPTIONAL
A1cv		.200	1.00	.017	.080	NO
A1cw		.300 MAX	1.00 MIN	.019 .021	.125 MAX	YES
A1cy		.300 MAX	1.00 MIN	.020	.104 MAX	YES
A1cz		.300 MAX	1.00 MIN	.020	.140 MAX	YES
A1da		.300 MAX	1.00	.021	.105	NO
A1db		.300 MAX	1.00 MIN	.022 MAX	.107 MAX	YES
A1dd		.300 MAX	1.00 MIN	.022 MAX	.130 MAX	YES
A1de		.300 MAX	1.00	.030	.110	NO
A1df		.300	1.00 MIN	.035	.150	NO
A1dg		.300 MAX	1.00 MIN	.042 MAX	.155 MAX	YES
A1dh		.300 MAX	1.125	.030	.090	NO
A1dj		.300	1.25	.032	.200	NO
A1dk		.300 MAX	1.50 MAX	.032	.137 .140	NO
A1dm		.303 .323	1.00 MIN	.030	.165 .185	NO
A1dr		.315 MAX	1.14 MIN	.020 MAX	.110 MAX	YES
A1ds		.320	1.13 MIN	.030	.140	OPTIONAL
A1dt		.320 .330	1.10 MIN	.030 .034	.147 .153	YES

	A	B	C	D	E	CHAMFERED EDGES
A1du		.325	1.00 MIN	.020	.220	NO
A1dv		.325	1.00 MIN	.020	.325	NO
A1dw		.334	1.00 MIN	.020	.118	YES
A1dy		.335 MAX	1.00 MIN	.027 .034	.150 .185	YES
A1dz		.335	1.06 MIN	.020	.118	YES
A1ea		.338 MAX	.984	.031	.149 MAX	YES
A1eb		.340	1.00 MIN	.035	.150	OPTIONAL
A1ec		.340	1.18 MIN	.036	.135	OPTIONAL
A1ed		.350	.750		.200	NO
A1ee		.350 MAX	1.00 MIN	.043 MAX	.145 MAX	NO
A1ef		.350 MAX	1.00 MIN	.031	.140 MAX	YES
A1eh		.350	1.13 MIN	.030	.140	OPTIONAL
A1ej		.350	1.20	.032	.200	NO
A1ek		.350	1.25 MIN	.020	.210	NO
A1em		.354 MAX	1.02 MIN	.032 MAX	.133 MAX	YES
A1en		.370 MAX	.750 MIN	.048	.315 MAX	YES
A1ep		.375	.750 MIN	.032	.270	NO
A1eq		.375	.800	.050	.300	NO
A1er		.375	1.00	.020	.234	NO
A1es		.375	1.00 MIN	.032	.220	OPTIONAL
A1et		.375	1.00 MIN	.040	.210	OPTIONAL
A1eu		.375	1.00 MIN	.050	.300	NO
A1ev		.375	1.25 MIN	.032	.125	NO
A1ew		.375	1.25 MIN	.032	.200	NO
A1ex		.375	1.25	.032	.250	NO
A1ey		.375	1.25 MIN	.051	.200	NO
A1ez		.375	1.25 MIN	.051	.220	NO
A1fc		.400	.400	.020	.100	NO
A1fd		.400 MAX	1.00 MIN	.022 MAX	.115 MAX	NO
A1ff		.400 MAX	1.50 MIN	.035 MAX	.240 MAX	YES
A1fg		.410	1.13 MIN	.031	.135	OPTIONAL
A1fh		.410 MAX	1.14 MIN	.022 MAX	.140 MAX	YES
A1fj		.415		.033	.145	OPTIONAL
A1fk		.415 MAX	1.11 MIN	.033 MAX	.145 MAX	YES
A1fm		.425 MAX	.450 MIN	.021	.110 MAX	NO
A1fn		.433 MAX	.709 MIN	.059 MAX	.264 MAX	YES
A1fq		.438	1.00 1.126	.025	.200	YES
A1fr		.450	1.00 MIN.	.030	.245	NO
A1fs		.450 MAX	1.13 MIN	.019 .021	.098 .102	YES
A1ft		.470 MAX	1.30 MIN	.028	.236 MAX	YES
A1fu		.496 .516	2.25 2.75	.030	.333 .363	NO
A1fv		.500	.750 MIN	.028	.187	NO
A1fw		.500	1.00 MIN	.032	.250	NO
A1fx		.500	1.00 MIN	.032	.500	NO
A1fz		.500	1.00 MIN	.200	.325	NO
A1ga		.500	1.25 MIN		.375	NO
A1gb		.500	1.25 MIN	.020	.313	NO
A1gc		.500	1.25 MIN	.030	.313	NO
A1gd		.500	1.25 MIN	.030	.380	NO
A1ge		.500	1.25 MIN	.030	.500	NO
A1gf		.500	1.25	.032	.375	NO
A1gg		.500	1.50 MIN	.032	.375	NO
A1gj		.500	1.75 MIN	.028	.197	OPTIONAL

A1 Cont'd on next page

A1 Cont'd

	A	B	C	D	E	CHAMFERED EDGES
A1gk		.510	1.125 MIN	.020	.097	NO
A1gm		.520 MAX	1.00 MIN	.022 MAX	.265 MAX	YES
A1gn		.520 MAX	1.00 MIN	.040	.260 MAX	YES
A1gp		.520 MAX	1.125 MIN	.022 MAX	.275 MAX	YES
A1gq		.530 MAX	1.25 MIN	.040 MAX	.405 MAX	YES
A1gs		.560	1.00 MIN	.032	.276	NO
A1gt		.622 .628	1.125 1.375	.030 .034	.615 .635	NO
A1gx		.625	1.25 MIN	.032	.375	NO
A1gz		.656	1.50 MIN	.032	.406	OPTIONAL
A1ha		.688 MAX	1.00 MIN		.313 MAX	NO
A1hc		.700 MAX	1.00 MIN	.020 MAX	.150 MAX	NO
A1hd		.703	1.00 MIN	.035	.328	NO
A1he		.748	1.00	.020	.126	NO
A1hf		.748	1.02	.022	.236	NO
A1hg		.750		.032	.375	NO
A1hh		.750	.787 MIN	.020	.295	NO
A1hk		.750	1.25 MIN	.020	.313	NO
A1hm		.750	1.25 MIN	.030	.500	NO
A1hn		.750	1.25	.032	.375	NO
A1hp		.850	1.25 MIN	.032	.187	NO
A1hq		.869 .916	2.25 2.75	.030	.333 .360	NO
A1hs		.885 MAX	.984 MAX	.031	.196 MAX	YES
A1ht		.900 MAX	1.00 MIN	.032 MAX	.260 MAX	NO
A1hu		.940 1.41	2.25 3.75	.030	.333 .363	NO
A1hv		.969 1.016	2.25 2.75	.030 .030	.333 .363	NO
A1hw		.985	1.57 MIN		.312	NO
A1hx		1.00 MAX	.750 MIN	.020 MAX	.250 MAX	YES
A1hy		1.00	1.00 MIN		.500 MAX	NO
A1ja		1.00	1.00	.032	.375	NO
A1jb		1.00	1.00 MIN	.032	.500	NO
A1jc		1.00	1.25 MIN		.375	NO
A1jd		1.00	1.25 MIN		.500	NO
A1je		1.00	1.25 MIN	.020	.313	NO
A1jf		1.00	1.25 MIN	.030	.313	NO
A1jg		1.00	1.25 MIN	.030	.380	NO
A1jh		1.00	1.25 MIN	.030	.500	NO
A1jj		1.00	1.25	.032	.375	NO
A1jk		1.00	1.25 MIN	.034	.312	NO
A1jm		1.00	1.25 MIN	.040	.375	NO
A1jn		1.00	1.25 MIN	.040	.500	NO
A1jq		1.00	1.50	.032	.375	NO
A1jr		.175	1.10	.032	.090	NO
A1js		1.03 MAX	.787 MAX	.043	.267	NO
A1jt		1.03 MAX	1.25 MIN	.040 MAX	.405 MAX	YES
A1ju		1.03 MAX	1.25 MIN	.040 MAX	.530 MAX	YES
A1jv		1.12		.032	.375	NO
A1jw		.232 .240	1.02	.031	.129 .140	NO
A1jy		1.12	1.25 MIN	.032	.187	NO
A1jz		1.13	1.00 MIN		.500 MAX	NO
A1kb		1.16 1.22	1.625 1.875	.030 .034	.615 .635	NO
A1kd		1.20	1.00 MIN	.020	.325	NO
A1ke		1.25	1.00 MIN		.500 MAX	NO
A1kh		1.25	1.25	.032	.375	NO
A1kj		1.25	2.00 MIN	.030	.500	NO
A1kk		.185 .205	1.00	.032	.100 .128	NO
A1km		1.26	1.57 MIN		.312	NO
A1kn		1.30	1.25 MIN	.030	.375	NO
A1kp		1.38	1.00 MIN		.500 MAX	NO
A1kr		1.43	1.18 MIN	.032	.366	NO
A1ks		1.50	1.00 MIN		.500 MAX	NO
A1kt		1.50	1.00 MIN	.032	.500	NO
A1ku		1.50	1.25 MIN		.500	NO
A1kv		1.50	1.25 MIN	.030	.500	NO
A1kw		1.50	1.25	.032	.375	NO
A1kx		1.50	1.50	.032	.500	NO
A1ky		1.50	2.00 MIN	.030	.500	NO
A1kz		1.62		.032	.375	NO
A1ma		1.625	1.00	.032	.375	NO
A1mb		1.625	1.25		.375	NO
A1mc		1.625	1.25	.032	.375	NO
A1md		1.63	1.00 MIN		.500 MAX	NO
A1me		.280	1.10 MIN	.020	.100	YES
A1mf		1.75	1.00 MIN		.500 MAX	NO
A1mj		1.75	1.25	.032	.375	NO
A1mk		1.75	1.50 MIN	.030	.500	NO
A1mm		1.75	2.00 MIN	.030	.500	NO
A1mn		1.85	1.00	.020	.138	NO
A1mp		1.88	1.00 MIN		.500 MAX	NO
A1mq		1.93	2.34	.032	.315	NO
A1ms		2.00	1.00 MIN		.500 MAX	NO
A1mu		2.00	1.25 MIN	.030	.500	NO
A1mv		2.00	1.25	.032	.375	NO
A1mw		2.00	1.25 MIN	.040	.500	NO
A1mx		2.00	1.50	.032	.500	NO
A1my		2.00	2.00 MIN	.018	.500	NO
A1mz		2.00	2.00 MIN	.030	.500	NO
A1na		2.12		.032	.375	NO
A1nb		2.125	1.00	.032	.375	NO
A1nc		2.125	1.25	.032	.375	NO
A1nd		2.13	1.00 MIN		.500 MIN	NO
A1ne		.590 MAX	1.50	.020	.105 MAX	YES
A1nf		2.19 2.66	2.25 2.75	.030	.333 .363	NO
A1ng		2.20	1.18 MIN	.032	.366	NO
A1nh		2.25	1.00 MIN		.500 MAX	NO
A1nj		.720 .780	1.00 MIN	.030	.240 .260	NO
A1nm		2.25	1.25	.032	.375	NO
A1nn		2.25	1.50 MIN	.030	.500	NO
A1np		2.25	2.00 MIN	.030	.500	NO
A1nq		2.38	1.00 MIN		.500 MAX	NO
A1nr		2.40	1.57 MIN		.312	NO
A1ns		2.46	2.25 MIN	.030	.348	NO
A1nt		2.50		.030	.250	NO
A1nu		2.50	1.00 MIN		.500 MAX	NO
A1nv		2.50	1.25 MIN	.030	.500	NO
A1nw		2.50	1.25	.032	.375	NO
A1nx		2.50	2.00 MIN	.030	.500	NO
A1ny		2.62		.032	.375	NO
A1nz		2.625	1.00	.032	.375	NO
A1pa		2.625	1.25	.032	.375	NO
A1pb		2.63	1.00 MIN		.500 MAX	NO
A1pc		2.68	1.18 MIN	.032	.366	NO
A1pd		2.72	2.34	.032	.315	NO
A1pf		2.75	.551 MIN	.031	.314	NO
A1pg		2.75	1.00 MIN		.500 MAX	NO
A1ph		2.75	1.25	.032	.375	NO
A1pj		2.75	1.50 MIN	.030	.500	NO
A1pk		2.87	2.00 MIN	.030	.500	NO
A1pm		2.88	1.00 MIN		.500 MAX	NO
A1pn		3.00	1.00 MIN		.500 MAX	NO
A1pp		3.00	1.00 MIN	.032	.500	NO
A1pq		3.00	1.25	.032	.375	NO
A1pr		3.12		.032	.375	NO
A1ps		3.125	1.00	.032	.375	NO
A1pt		3.125	1.25	.032	.375	NO
A1pu		3.13	1.00 MIN		.500 MAX	NO
A1pv		1.095 1.155	1.00 MIN	.030	.303 .323	NO
A1pw		3.25	1.00 MIN		.500 MAX	NO
A1px		3.25	1.25	.032	.375	NO
A1py		3.30	1.18 MIN	.032	.366	NO
A1pz		3.37	2.00 MIN	.030	.500	NO
A1qa		3.38	1.00 MIN		.500 MAX	NO
A1qb		3.50	1.00 MIN		.500 MAX	NO
A1qc		3.50	1.25	.032	3.75	NO
A1qd		3.62		.032	.375	NO
A1qe		3.625	1.00	.032	.375	NO
A1qf		4.27 MAX	.750	.020	.250 MAX	YES
A1qg		3.63	1.00 MIN		.500 MAX	NO
A1qh		3.75	1.00 MIN		.500 MAX	NO
A1qj		3.75	1.25	.032	.375	NO
A1qk		3.85	1.50 MIN	.030	.500	NO
A1qm		3.87	2.00 MIN	.030	.500	NO
A1qn		3.88	1.00 MIN		.500 MAX	NO
A1qp		3.94	1.18 MIN	.032	.366	NO
A1qq		4.00	1.00 MIN		.500 MAX	NO
A1qr		4.00	1.25 MIN	.030	.520	NO
A1qs		4.12		.032	.375	NO
A1qt		4.125	1.00	.032	.375	NO
A1qu		4.125	1.25		.375	NO
A1qv		4.125	1.25	.032	.375	NO
A1qw		4.13	1.00 MIN		.500 MAX	NO
A1qx		4.25	1.00 MIN		.500 MAX	NO
A1qy		3.00	.375	.375	1.00	NO
A1qz		4.38	1.00 MIN		.500 MAX	NO
A1ra		4.50	1.00 MIN		.500 MAX	NO
A1rb		4.56	1.18 MIN	.032	.366	NO
A1rc		4.62		.032	.375	NO
A1rd		4.625	1.00	.032	.375	NO
A1re	4.72	3.22 MAX	.750	.030	.250 MAX	YES
A1rf		5.00	1.00 MIN	.032	.500	NO
A1rg		5.00	1.25 MIN	.030	.520	NO
A1rh		5.12		.032	.375	NO
A1rj		5.125	1.00	.032	.375	NO
A1rk		5.125	1.25		.375	NO
A1rm		5.125	1.25	.032	.375	NO
A1rn		5.13	1.00 MIN		.500 MAX	NO
A1rp		5.20	1.18 MIN	.032	.366	NO
A1rq		6.00	1.25 MIN	.030	.520	NO
A1rr		7.00	1.25 MIN	.030	.520	NO
A1rs		8.00	1.25 MIN	.030	.520	NO
A1rt	1.50	.205	.600	.034	.110	NO
A1ru	1.8625	.265 .305	.736 .773	.017 .023	.090 .110	NO
A1rv	2.00	.380	.800	.040	.200	NO
A1rw	2.00	.422	.800	.050	.375	NO
A1rx	2.25	.250	1.0	.030	.115	NO
A1ry	2.35 MIN	.210 MAX	1.1 MIN	.034 MAX	.107 MAX	NO
A1rz	2.495	.250	1.125	.050 TYP	.220	NO
A1sa	2.62	1.12 MAX	.750 MIN	.020	.250 MAX	YES
A1sb	2.68	.550			.145	YES
A1sc	2.72 MIN	.394 MAX	1.26 MIN	.020	.126	OPTIONAL
A1sd	2.75	.235	1.26	.031	.125	NO
A1se	2.88	.280	1.50	.020	.100	YES
A1sf	2.95	2.75	.098	.098	.590	NO
A1sg	3.15	1.65 MAX	.750 MIN	.020	.250 MAX	YES
A1sh	3.25	.300	1.50	.020	.110	NO
A1sj	3.25	.300	1.50	.020	.120	NO
A1sk	3.30	.300	1.50	.020	.130	NO
A1sm	3.38	.380	1.50	.051	.210 MAX	NO
A1sn	3.59 MAX	.590 MAX	1.50	.020	.105 MAX	YES
A1sp	3.67	2.17 MAX	.750	.020	.250 MAX	YES
A1sq	4.13	.500	1.77	.028	.197	YES
A1sr	4.25	2.25 MAX	1.00 MIN	.032	.250 MAX	YES
A1ss		.480 .520	1.00 MIN	.030	.240 .260	NO
A1st	2.30	.300 MAX	1.00 MIN	.019 .021	.092 .104	YES
A1su	2.502	.102 MAX	1.20 MIN	.019	.102	YES
A1sv		1.05 MAX	1.50 MIN	.032	.800 MAX	NO
A1sw		.600 MAX	1.50 MIN	.032	.385 MAX	NO
A1sx	2.30 MIN	.230 .300	1.00 1.50	.018 .022	.085 .130	NO
A1sy	.220	.159 MAX	1.02	.019	.062 MAX	NO
A1sz		.230 .300	1.0 MIN	.027 .035	.046 .067	NO
A1ta		.984 MAX	.787	.019	.125 MAX	YES
A1tb		.100 .170	.975 MAX	.014 .021	.045 .076	YES
A1tc		.140 .250	1.00 1.50	.027 .033	.065 .150	NO
A1td		.875 1.12	2.00 MIN	.030 .034	.219 .281	NO
A1te		1.87 2.12	2.00 MIN	.030 .034	.219 .281	NO
A1tf		2.87 3.12	2.00 MIN	.030 .034	.219 .281	NO
A1tg		.150 .175	1.00 MIN	.014 .016	.065 .075	NO
A1th		.150 .170	1.00 MIN	.014 .016	.068 .076	NO
A1tj		.250 .290	1.00 1.60	.018 .022	.090 .110	YES
A1tk		.145 .170	1.00 MIN	.014 .016	.068 .076	NO
A1tm	2.44	.255	1.09	.019	.102	YES
A1tn	2.65 2.72	.275	1.21	.012	.102	YES
A1tp		.380	1.50 MAX	.032	.190 .210	NO
A1tq		.220 MAX	1.10 MIN	.029 .033	.149 .165	NO
A1tr	2.50	.295 MAX	1.18 MIN	.019	.118 MAX	YES
A1ts		.330 .350	1.00 MIN	.040	.130 .145	NO

A2

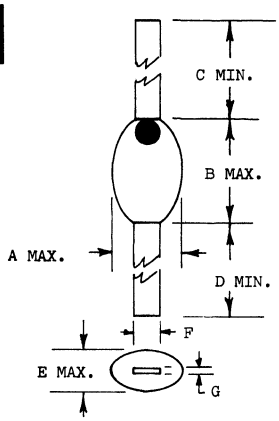

	A	B	C	D	E	F	G
A2	.045	.080	.500	.500		.020	.004
A2a	.030	.075	.500	.500		.020	.004
A2b	.060	.125	.500	.500		.020	.004
A2c	.045	.100	.500	.600		.019	.004
A2d	.060	.150	.500	.500		.045	.005
A2e	.035	.080	.500	.500		.018	.004
A2f	.900	.150	.500	.500		.072	.007
A2g	.050	.100	.500	.500		.018	.004
A2h	.035	.080	.500	.500		.018	.003
A2j	.060	.100	.500	.500		.027	.004
A2k	.059	.098	.315	.500		.022	.003
A2l	.055	.080	.460	.460		.015	.004
A2m	.045	.100	.500	.500		.018	.003
A2n	.090	.150	.500	.500		.072	.007
A2p	.045	.100	.430	.430	.045	.022	.005
A2q	.100	.100	.468	.465	.045	.022	.005
A2r	.060	.100				.018	.005
A2s	.065	.125				.045	.005
A2t	.060	.100	.500	.500		.018	.003
A2u	.070	.150	.500	.500		.047	.005
A2v	.040	.085	.500	.500		.020	
A2w	.060	.100	.500	.500		.040	

A3

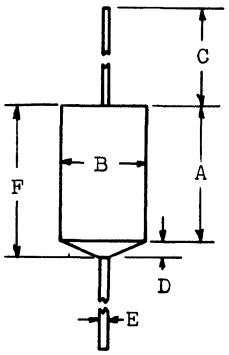

	A	B	C	D	E	F
A3c	.375	.220	1.00	.048	.031 .033	
A3e	.200	.250	1.25	.048	.031 .033	
A3f	.429	.260	1.02	.063	.030 .036	
A3g		.160			.032	.437
A3h		.160	1.25		.032	.300
A3j		.160	1.25	.090	.032	.250
A3k		.182 .192	1.312 1.408		.277 .283	.222 .252
A3n		.200	1.00 MIN		.027 .037	.360
A3p		.200 MAX	1.25 MIN		.031 .033	.375 MAX
A3q		.200 MAX	1.25 MIN		.051	.375 MAX
A3r		.200	1.25	.090	.032	.350
A3s		.200	1.50	.060	.032	.300
A3t		.220 MAX	1.25 MIN		.031 .033	.375 MAX
A3v		.236	1.40		.032	.394
A3w	.300	.195 .205	1.50 MIN		.032	
A3x	.350	.195 .205	1.50 MIN		.032	
A3y		.106 MAX	1.00		.029	.300 MAX

A6

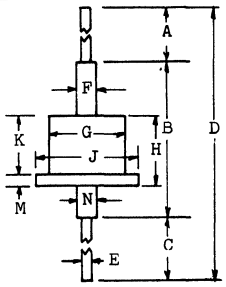

	A	B	C	D	E	F	G	H	J	K	M	N
A6	1.25 MIN	.750 MAX	1.25 MIN	3.250 MIN	.300		.280 MAX	.360 MIN	.375 MAX	.300 MIN	.060 MAX	
A6a				3.25	.027	.051	.236	.276	.374			
A6b	1.00 MIN		.100 MAX		.033	.138 MAX	.280 MAX	.330 MAX	.472 MAX		.157 MAX	.275 MAX
A6c	1.00 MIN		.100 MAX		.033	.138 MAX	.280 MAX	.330 MAX	.472 MAX		.394	
A6d	1.00 MIN	.800 MAX	.100 MAX	1.900 MAX	.033	.125	.280 MAX	.330 MAX	.400 MAX		.100 MAX	.180 MAX
A6e	1.31	.900	1.31	3.53	.031	.125	.270	.360	.380			
A6f	1.30	1.09	1.26 MIN	3.66	.035 .043	.098 MAX	.279 MAX	.354 MAX	.377 MAX	.240 MAX	.114 MAX	

A9

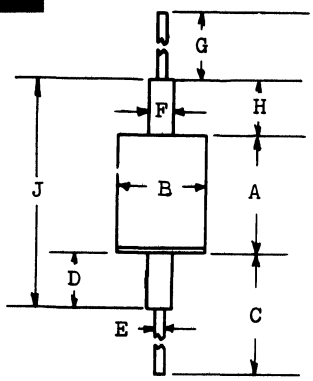

	A	B	C	D	E	F	G	H	J
A9	.313	.250	1.125	.170	.032				
A9a	.322	.236	1.29	.118	.031				
A9b		.150 MAX			.020		1.00 MIN		.600 MAX
A9c	.075	.074			.020	.030	1.00 MIN		.180
A9d	.108	.068			.020	.032	.758		.160
A9e	.130 MAX	.065 .075			.018 .022	.034 .035	1.00 MIN		.160 .175
A9f	.160	.070			.020		1.00		.180
A9g	.165	.085			.020	.042	1.00 MIN		.220
A9h	.276	.217			.032	.118	1.38		.511
A9j	.313	.219		.073	.030	.063	1.25 MIN	.203	.578
A9k	.500 MAX	.250 MAX			.020 .032	.070 .080	1.00 MIN		.687 .875
A9m	1.500				.020	.075	2.50		.169
A9n		.160 MAX			.018 .022		1.00 MIN		.600 MAX

A19

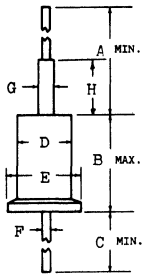

	A	B	C	D	E	F	G	H
A19	1.25 MIN	.30 MAX	1.25 MIN	.185	.220	.026	.040	
A19a	1.25 MIN	.345 MAX	1.25 MIN	.200 MAX	.230 MAX	.030	.070 MAX	.135 MAX

A21

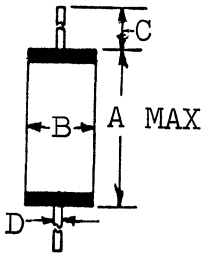

	A	B	C	D
A21	.265	.105	1.0	.02

A24

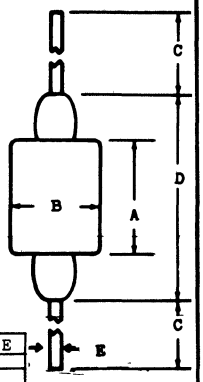

	A	B	C	D	E
A24	.354	.197	1.30	.690	
A24a		.256	1.00	.690	
A24b	.134	.083	1.00	.276	.020
A24c		.106	.078	.377	.019

A26

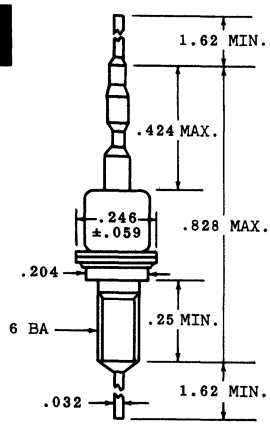

15. OUTLINE DRAWINGS

IN DRAWING NUMBER SEQUENCE

A26a

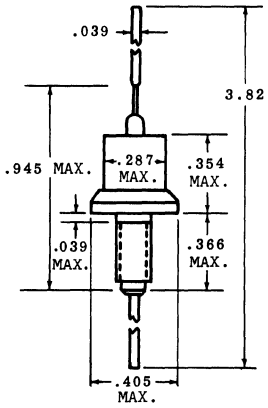

A31

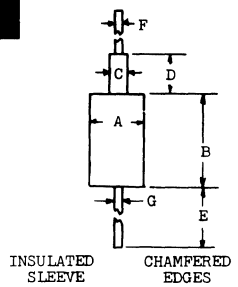

	A	B	C	D	E	F	G	INSULATED SLEEVE	CHAMFERED EDGES
A31	.095 .140	.100 .300	.078 MAX		1.50 MAX	.018 .022	.018 .022	NO	NO
A31a	.225 MAX	.350 MAX	.090 MAX	.210 MAX	1.35 MAX	.035 MAX	.035 MAX	NO	NO
A31b	.140 MAX	.300 MAX	.075 MAX	.100 MAX	1.50 MAX	.022 MAX	.022 MAX	NO	NO
A31c	.265 MAX	.350 MAX	.110 MAX	.210 MAX	1.00 MAX	.035 MAX	.035 MAX	NO	NO
A31d	.218 .220	.350 MAX		.250 MAX	1.75			NO	NO
A31e	.105 MAX	.300 MAX	.040		1.00 MIN	.018 .022	.018 .022	NO	YES
A31f	.107 MAX	.300 MAX			1.00 MIN	.018 .022	.018 .022	NO	YES
A31g	.125 MAX	.300 MAX			1.00 MAX	.018 .022	.018 .022	NO	YES
A31h	.212 .224	.354 MAX				.031	.031	NO	NO
A31j	.218	.250 MAX		.200		.029	.029	NO	NO
A31k	.219	.205 MAX		.185	1.05	.029	.029	NO	NO
A31n	.230 MAX	.250 MAX			1.00	.033 MAX	.042 MAX	NO	NO
A31p	.236	.354 MAX		.197	.984	.032	.032	NO	NO
A31q	.240	.405			1.40	.039	.039	NO	NO
A31r	.240	.405			1.40	.039	.039	YES	NO
A31s	.250	.225 MAX		.173	1.13	.032	.032	NO	NO
A31u	.315	.315 MAX		.591	1.38	.032	.032	NO	NO
A31v	.316	.292 MAX		.687	1.38	.032	.032	NO	NO
A31w	.375	.443 MAX		.297	1.75	.028	.028	NO	NO
A31x	.375	.563			2.50	.032	.032	NO	NO
A31y	.375	.875			2.50	.032	.032	NO	NO

A32

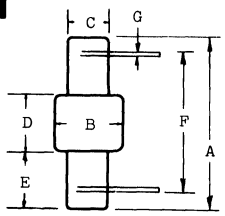

	A	B	C	D	E	F	G
A32	.260	.105	.060	.080			
A32a	.238	.087	.060	.080			
A32b	.540	.142	.093	.170	.185		
A32c	.560	.240	.130	.360	.100	.500	.020

A34

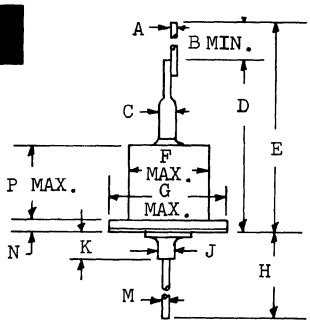

	A	B	C	D	E	F	G
A34	.032	1.060		.650 MAX	1.710	.250	.375
A34a	.020	1.040	.063 MAX	.630	1.670	.248 MAX	.386 MAX
A34b		1.940	.062	.625	1.940	.281	.375
A34c		2.030 MIN		.531	2.03 MIN	.250	.406 MAX
A34d	.034	1.380	.063	.590	1.970		.382

	H	J	K	M	N	P
A34	1.25 MIN				.050	.240
A34a	1.22 MIN	.030		.030	.046 MAX	.240 MAX
A34b	1.506	.062	.125	.032	.045	.236
A34c	1.500 MIN	.024		.024		
A34d	1.380	.032		.032		

A35

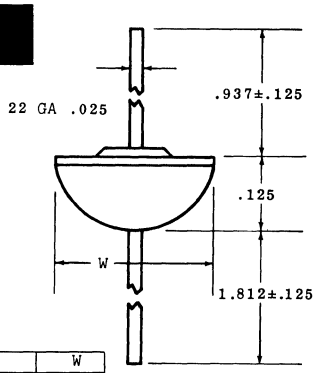

	W
A35	.250
A35a	.375

A41

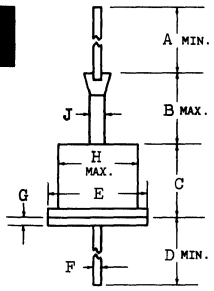

	A	B	C	D	E	F
A41	1.07	.310	.296	1.20	.375	.030
A41a	1.50	.200	.225	1.50	.230	.032

	G	H	J
A41	.046	.270	.060
A41a			

A42

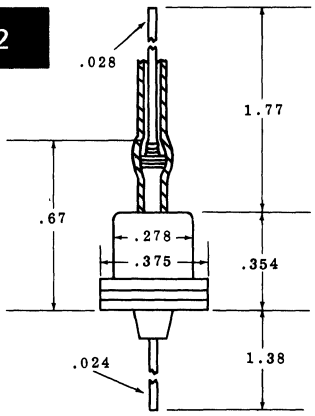

A44

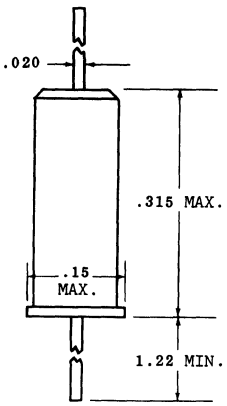

A47

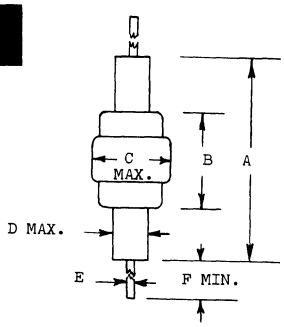

	A	B	C	D	E	F
A47	.760	.30	.140	.076	.030	1.25
A47a	.875		.250	.075	.020	1.00
A47b	.875	.50	.180	.080	.035	1.00

A50

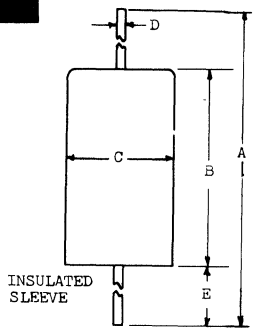

	A	B	C	D	E	INSULATED SLEEVE
A50		.405 MAX	.240 MAX	.031	1.40 MAX	NO
A50a		.405 MAX	.240 MAX	.031	1.40 MAX	YES
A50b	1.00	.360	.150	.031		NO
A50c	1.25	.360	.236	.029	1.50	NO
A50d	1.38	.401	.236	.031		NO

A52

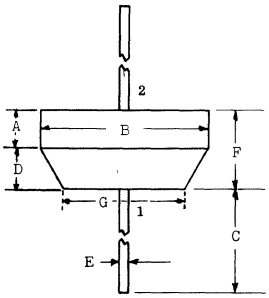

	A	B	C	D	E	F	G	1	2
A52		.500	1.50		.032	.187		C	A
A52a		.140 MAX	1.00 MIN		.032	.150 MAX			
A52b		.147 / .167	.550 / .625		.027 / .033	.185 / .215			
A52c		.200			.032	.375			
A52d		.210 MAX	1.12		.056 MAX	.375 MAX			
A52e	.155	.140	1.00 MIN		.030	.200 MAX			
A52f	.184	.100	1.00 MIN		.030	.200	.070		
A52g	.233 / .237	.198 / .202	1.375 MIN		.028 / .032	.298 / .302	.098 / .102		
A52j	.313	.256	1.06		.033	.437	.125		

A53

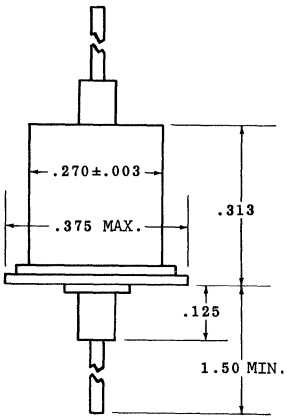

A54

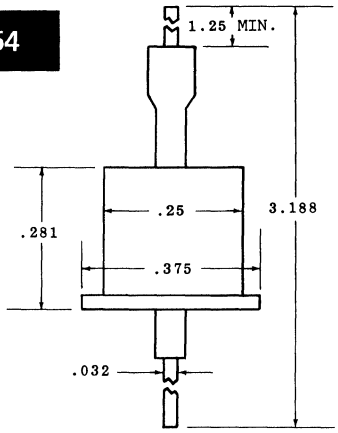

A55

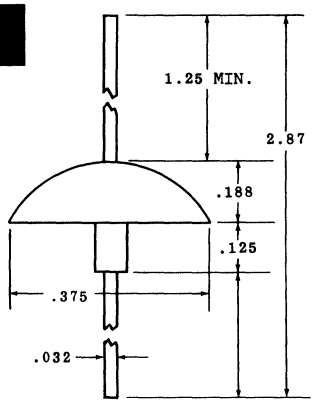

A56

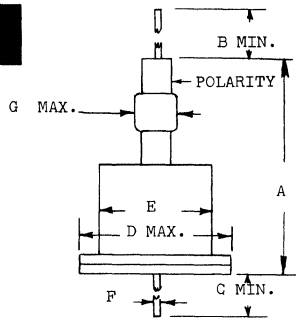

	A	B	C	D	E	F	G	POLARITY
A56	.62	1.28	1.36	.388	.24	.032	.19	
A56a	.826	1.18	1.18	.393	.275	.031	.125	ANODE
A56b	.826	1.18	1.18	.393	.275	.031	.125	CATHODE

A60

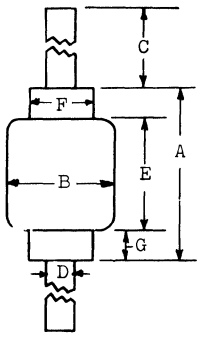

	A	B	C	D	E	F	G
A60	.160	.085	.750 MIN	.028	.080	.055	
A60b	.220	.085	1.00 MIN	.020	.165	.042	
A60d		.065 MAX	1.00 MIN	.020 MAX	.085 MAX	.035 MAX	.050 MAX
A60e	.100 MAX	.065 MAX	.900 MIN	.020			
A60f	.155 MAX	.085 MAX	.750 MAX	.028			
A60g	.165 MAX	.074 MAX	1.02 MIN	.019			
A60h	.177 MAX	.079 MAX	1.00 MIN	.020	.154 MAX		
A60j	.180 MAX	.095 MAX	1.00 MIN	.031	.165 MAX		
A60k	.180 MAX	.100 MAX	1.00 MIN	.059	.185 MAX		
A60m	.196 MAX	.086 MAX	1.37 TYP	.019			
A60n	.250 MAX	.850 MAX	.710 MIN	.028			
A60p	.300 MAX	.125 MAX	1.25 MIN	.020			
A60q	.350 MAX	.145 MAX	.975 MIN	.040			
A60r	.280 MAX	.150 MAX	1.00 MIN	.039 / .041	.150 TYP		.065 TYP
A60s	.330	.060 / .080	1.00	.018 / .022	.140 / .180		.025
A60t	.220 MAX	.103 MAX	1.14 MIN	.032			
A60u		.078 MAX	1.06 MIN	.019	.177 MAX		

A69

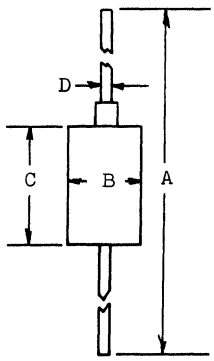

	A	B	C	D
A69	3.37	.225	.250	.032

A72

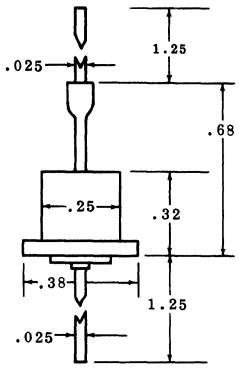

A73

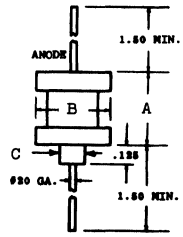

	A	B	C
A73	.438	.375	
A73a	.438	.500	
A73b	.406	.312	.080

A74

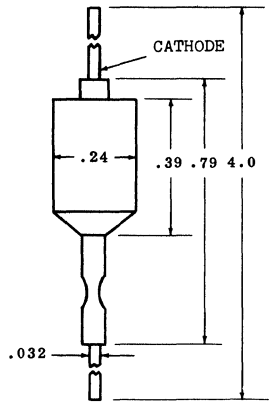

A79

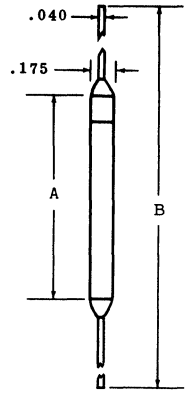

	A	B
A79a	.750	2.750
A79b	1.125	3.062
A79c	2.075	4.062
A79d	3.688	5.688

A82

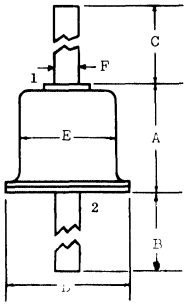

	A	B	C	D	E	F	1	2
A82	.100 MAX		1.00 MIN	.110 MAX	.085 MAX	.019 .022	A	C
A82a	.100 MAX		1.00 MIN	.110 MAX	.085 MAX	.019 .022	C	A
A82b	.360 MAX	1.125 MIN	1.125 MIN	.220 MAX	.190	.020 MAX		
A82c	.370 MAX	1.125 MIN	1.125 MIN	.230 MAX		.021 MAX		
A82d	.500 MAX	1.062 MIN	1.062 MIN	.250 MAX	.219	.032 MAX		
A82e	.660 MAX	1.125 MIN	1.125 MIN	.225 MAX		.032 MAX		

A83

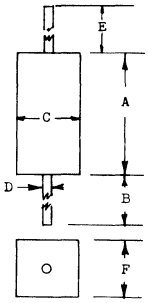

	A	B	C	D	E	F
A83a	.400 MIN	.450	.145 .175	.030	.450	.145 .175
A83e	.100 MIN	.750 MIN	.060	.015	.750 MIN	.060
A83f	.250 MIN	.750 MIN	.125	.015	.750 MIN	.125
A83g	.500 MIN	.750 MIN	.150	.015	.750 MIN	.150
A83j	.320		.118	.020	.100	.118
A83k	.433 MAX		.512 MAX	.236	1.50 MIN	.256 MAX
A83p	.500		.105	.020	.100	.100
A83s	.580		.360	.020	.100	.450
A83t	.600		.200	.020	.400 MIN	.200
A83u	.630 MAX		.512 MAX	.236	1.50 MIN	.256 MAX
A83v	.632 MAX		.500 MAX	.032	1.50 MIN	.265 MAX
A83w	.632 MAX	1.50 MIN	.532	.025		.265 MAX
A83x	.635 MAX		.353 MAX		1.50 MIN	.220 MAX
A83ab	.748	.590	.236	.031	.787	.275
A83af	1.00		.250	.034 MAX	2.00 MIN	.250
A83ag	1.00 MAX		.510 MAX	.051	1.50 MIN	.260 MAX
A83aj	1.03 MAX		.500 MAX	.032	1.50 MIN	.265 MAX
A83ak	1.032 MAX	1.50 MIN	.532	.025		.265 MAX
A83aq	1.32		.187	.032 MIN	.100	.187
A83ar	1.33	1.18	.275	.031	1.18	.314
A83as	1.34		.315	.032	1.18	.275
A83at	1.34		.433	.039	1.18	.394
A83av	1.43		.315		.984	.236
A83ax	1.432 MAX	1.50 MIN	.532	.025		.265 MAX
A83az	1.62 MAX		.510 MAX	.051	1.50 MIN	.260 MAX
A83ba	1.73	.590	.236	.031	.787	.275
A83bd	1.832 MAX	1.50 MIN	.532	.025		.265 MAX
A83bg	2.00		.250	.034 MAX	2.00 MAX	.250
A83bh	2.00		.375	.032 MIN	.100	.375
A83bk	2.00 MAX		.510 MAX	.051	1.50 MIN	.260 MAX
A83bn	2.36 MAX		.512 MAX	.236	1.50 MIN	.256 MAX
A83bp	2.37 MAX		.510 MAX	.051	1.50 MIN	.260 MAX
A83br	2.50 MAX		.510 MAX	.051	1.50 MIN	.260 MAX
A83bt	3.00		.250	.034 MAX	2.00 MIN	.250
A83bu	3.14 MAX	1.50 MIN		.023	1.50 MIN	.472 MAX
A83bv	3.15 MAX		.512 MAX	.236	1.50 MIN	.256 MAX
A83bw	3.20 MAX		.510 MAX	.051	1.50 MIN	.260 MAX
A83bx	3.50		.375	.032 MIN	.100	.375
A83by	4.25 MAX		.510 MAX	.051	1.50 MIN	.260 MAX
A83bz	4.50		.375	.032 MIN	.100	.375
A83ca	.230 MIN	1.0	.090 .115	.030	1.0	.090 .115
A83cb	.230	1.00	.090 .115	.030	1.00	.090 .115
A83cc	.500 MAX	1.00 MIN	.500 MAX	.028 .032	1.00 MIN	.355 MAX
A83cd	.120	.500 MIN	.060	.014	.500 MIN	.060

A84

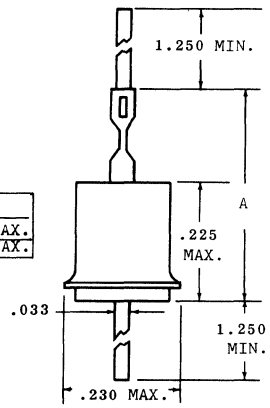

	A
A84	.425 MAX.
A84a	.410 MAX.

A86

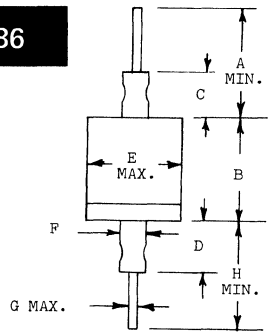

	A	B	C	D	E	F	G	H
A86	1.125	.290	.156	.156	.250	.063	.031	1.123
A86a	1.00	.500	.187	.187	.250	.075	.026	1.00

A87

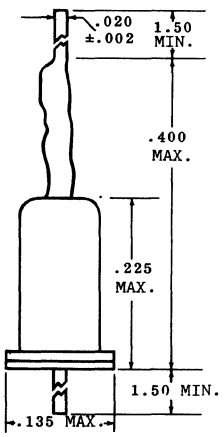

A89

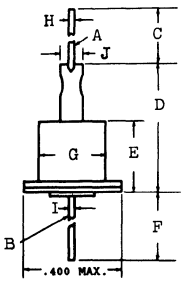

	A	B	C	D	E	F	G	H	I	J
A89	CATHODE	ANODE	1.00	.625	.310	1.25	.280	.020	.030	.100
A89a	ANODE	CATHODE	1.09	.657	.354	1.00	.312	.043	.043	
A89b	ANODE	CATHODE	1.38	.590	.256	1.38	.252	.031	.031	
A89c	ANODE	CATHODE	1.06	.656	.313	1.25	.253	.026	.026	.060

A94

	A	B	C	D	POLARITY	E
A94	.450	.080	.450	.045	DOT CATHODE	.011
A94a	.450	.100	.450	.060	DOT CATHODE	.011
A94b	.450	.068	.450	.042	DOT CATHODE	.012
A94d	1.20	.105	1.20	.065		.020
A94e	1.21	.380	1.21	.200		.030
A94f	1.00	.150	1.00	.085	DOT CATHODE	.020 .018
A94g	1.00	.180	1.00	.150	BAND CATHODE	.035 MAX
A94h	.75 MIN	.080	.75 MIN	.040		.015
A94J	1.13 MIN	.180	1.13 MIN	.100 .150	BAND CATHODE	.029 .035
A94m	1.10 MIN	.240 .260	1.10 MIN	.170 .250	BAND CATHODE	.048 .052

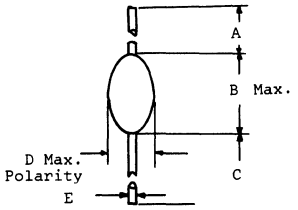

A99

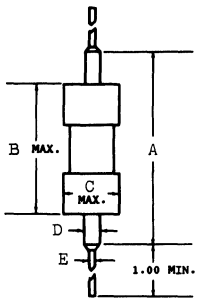

	A	B	C	D	E
A99	.875	.500		.075	.026
A99a	.583	.362	.197	.071	.020
A99b	.846	.500	.209	.079	.025

A100

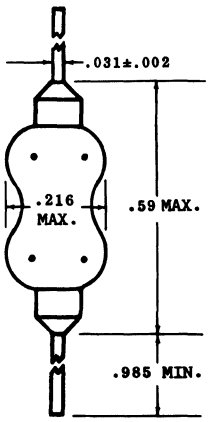

A106

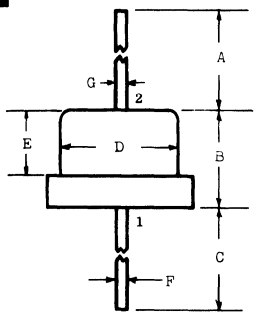

	A	B	C	D	E	F	G	H	1	2	CHAMFERED EDGES
A106	1.60 MIN	.160 MAX	1.65 MIN	.197	.236 MAX	.018	.018		C	A	YES
A106a	1.375	.095	1.375	.080	.115 MAX	.018 .022	.018 .022	.035 MAX	A	C	NO
A106b	1.00	.110	1.00	.090	.115 MAX	.018 .022	.018 .022	.055 MAX	A	C	NO
A106d	1.37	.177	1.37	.196	.244	.017	.017		A	C	YES
A106e	1.25	.075	1.25	.075	.100	.020	.020				NO

A109

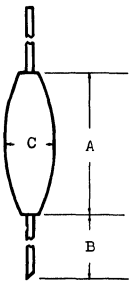

	A	B	C
A109	.130	.500	.055
A109a	.100	.500	.050
A109b	.100		.085
A109c	.165 MAX	1.29 MAX	.110 MAX
A109d	.080		.065

A115

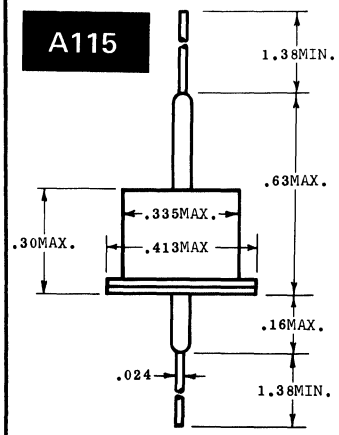

A123

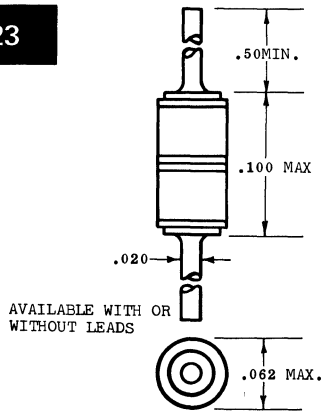

A126

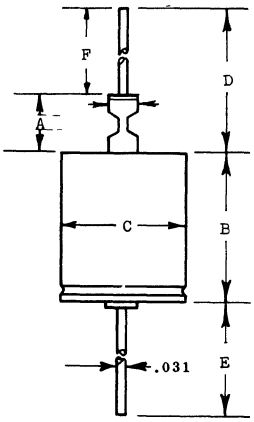

	A	B	C	D	E	F
A126	.210 MAX	.315 MAX	.241	1.125 MIN	1.125 MIN	
A126a	.175	.315 MAX	.240	1.125 MIN	1.125 MIN	
A126b		.334	.314		1.37	1.37
A126c	.210 MAX	.350 MAX	.215 .265	1.125 MIN	1.125 MIN	.110 MAX

15. OUTLINE DRAWINGS

IN DRAWING NUMBER SEQUENCE

A129

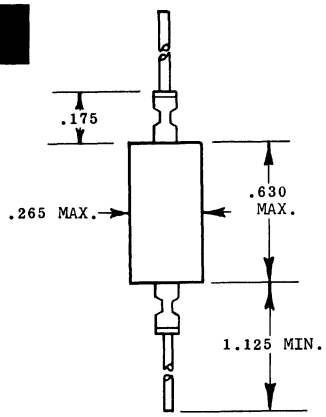

A130

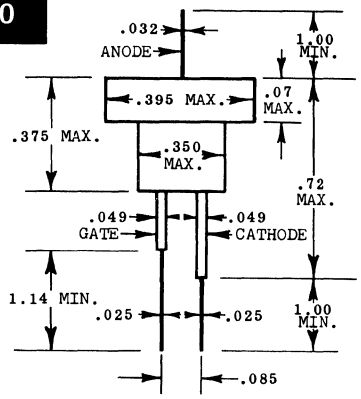

A131

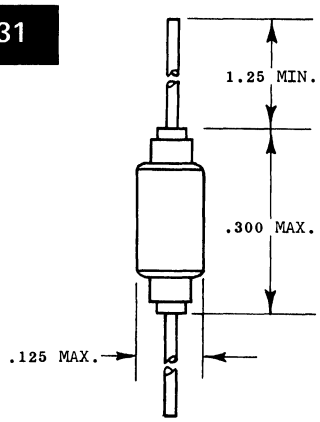

A134

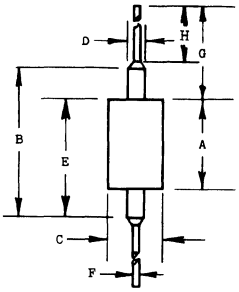

	A	B	C	D	E	F	G	H
A134	.497	.729	.217	.071	.610	.032		
A134a	.100 MAX	.160 MAX	.070 MAX	.030		.020	1.00 MIN	
A134b	.120	.236	.082	.039		.020		
A134c	.133	.236	.082		.184	.020	1.05	
A134d	.495	1.00	.385	.250		.032	1.40 MIN	
A134e	.134 MAX		.082 MAX			.022 MAX		1.00 MIN

A138

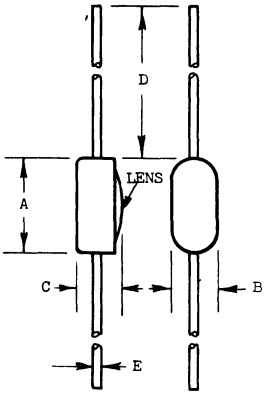

	A	B	C	D	E	LENS	CHAMFERED EDGES
A138	.315	.158	.158	1.58 MAX	.024	YES	YES
A138a	.315	.157	.197	1.00	.020	NO	NO
A138b	.315	.158	.158	1.58	.016	NO	NO
A138c	1.125	.250	.500	2.00	.051	NO	NO
A138d	1.500	.250	.500	2.00	.040	NO	NO
A138e	1.500	.375	.687	2.00	.051	NO	NO
A138f	1.625	.250	.500	2.00	.051	NO	NO
A138g	2.00	.250	.500	2.00	.051	NO	NO
A138h	2.375	.250	.500	2.00	.051	NO	NO
A138j	2.500	.250	.500	2.00	.040	NO	NO
A138k	2.500	.375	.687	2.00	.051	NO	NO
A138m	2.700	.250	.500	2.00	.051	NO	NO
A138n	2.750	.250	.500	2.00	.051	NO	NO
A138p	3.00	.250	.500	2.00	.040	NO	NO
A138q	3.50	.250	.500	2.00	.051	NO	NO
A138r	3.50	.375	.687	2.00	.051	NO	NO
A138s	4.250	.250	.500	2.00	.051	NO	NO
A138t	4.500	.375	.687	2.00	.051	NO	NO
A138u	5.500	.375	.687	2.00	.051	NO	NO
A138v	6.500	.375	.687	2.00	.051	NO	NO
A138w	1.47 1.53	.370 .390	.670 .710	2.00 MIN	.048 .054	NO	NO
A138x	2.47 2.53	.370 .390	.670 .710	2.00 MIN	.048 .054	NO	NO
A138y	3.47 3.53	.370 .390	.670 .710	2.00 MIN	.048 .054	NO	NO
A138z	4.47 4.53	.370 .390	.670 .710	2.00 MIN	.048 .054	NO	NO

A141

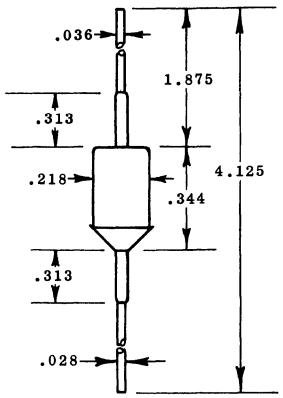

A145

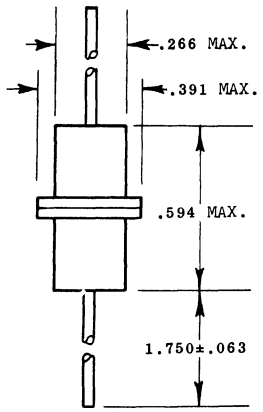

A146

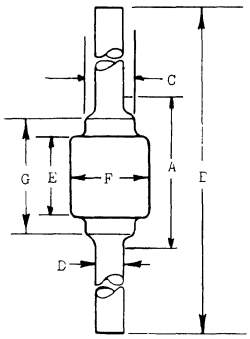

	A	B	C	D	E	F	G
A146		1.562 1.688		.026 .030	.080 .110	.080 .110	.125 .161
A146a			.035	.020	.080	.070	
A146b			.055	.028	.085	.085	
A146c			.115	.040	.050	.145	
A146d		1.63		.028		.075	
A146e		2.03		.040		.120	
A146f	2.50 MAX	1.68	.055	.028	.085	.085	
A146g	.250	2.25	.035	.020	.070	.080	
A146h	.260	2.30				.104	.160
A146j	.275	1.62		.028	.085	.085	
A146k	.300	2.30		.039 .041		.134 .136	
A146m	.350 MAX	2.300 MIN	.115 TYP			.145 MAX	.175 TYP
A146n	.280	2.28		.039 .041			
A146p	.350 MAX	2.30 MIN		.039 .041	.100 .140	.100 .140	.150 .200

A149

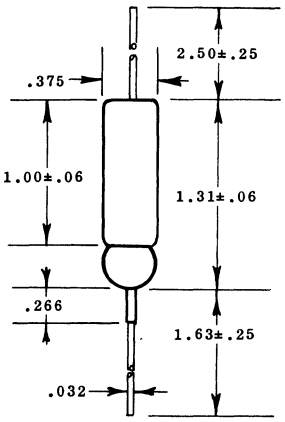

A152

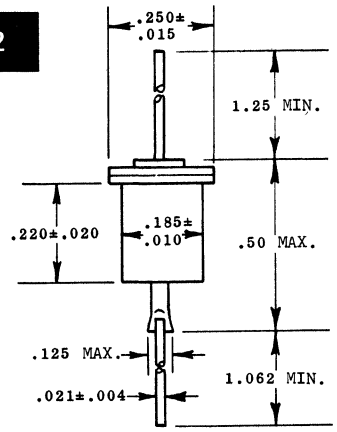

A154

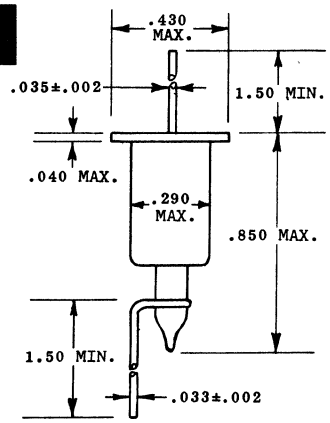

A163

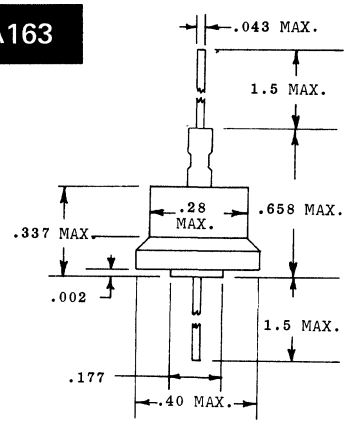

A164

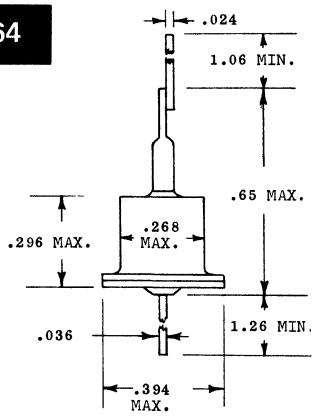

A167

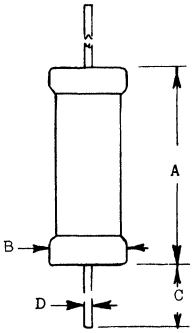

	A	B	C	D
A167	.50	.225	1.5	.032
A167a	.69	.250	2.5	
A167b	2.5	.250	2.5	
A167c	.59	.180	1.57	.031
A167d	.67	.180	1.57	.031
A167e	1.65	.394	1.58	.032
A167f	2.44	.394	1.58	.032
A167g	3.03	.394	1.58	.032
A167h	2.68	.591	.354	.197
A167j	3.27	.591	.354	.197
A167k	4.25	.591	.354	.197
A167m	5.04	.591	.354	.197
A167n	6.61	.591	.354	.197
A167p	7.80	.591	.354	.197
A167r	5.04	.827	.354	.197
A167s	6.61	.827	.354	.197
A167t	7.80	.827	.354	.197
A167u	8.98	.827	.354	.197
A167v	.406	.437	1.50	20-GA
A167w	1.00	.850		.030
A167x	2.00	.850		.030
A167y	2.50	.850		.030
A167z	3.00	.850		.030
A167aa	.748	.236	1.37 MIN	.031

A168

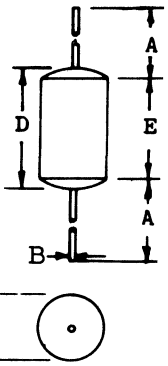

	A	B	C	D	E
A168c	1.25 MIN	.031 .032	.210 MAX	.280 .300	
A168d	1.58 MIN	.035	.413 MIN		1.73 1.81

A171

	A	B	C	D	E	F	G
A171		.295	.177	.019	.165	.984	.984
A171a		.314	.177	.023	.216	.984	1.18
A171b	2.38	.492	.255	.040	.255		
A171c	2.45	.275	.138	.020	.138		
A171d	2.46	.374	.196	.031	.196		
A171f	2.58	.276	.098	.020	.098		
A171g	2.80	1.60	.300	.040	.300		
A171h	2.44	.440 MAX	.137 MAX	.022 MAX	.137 MAX	1.00 MIN	1.00 MIN

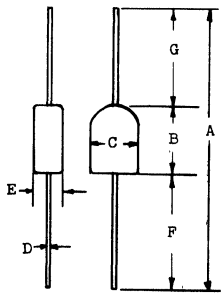

A179

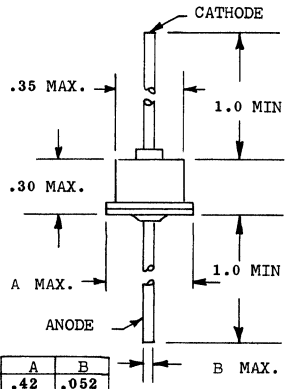

	A	B
A179	.42	.052
A179a	.45	.066
A179b	.450	.051

A182

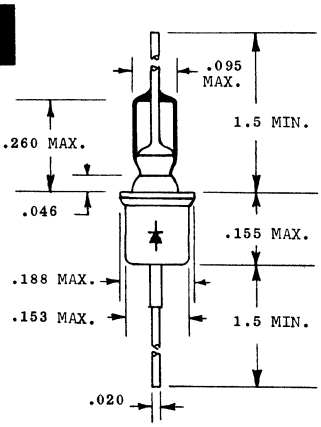

A185

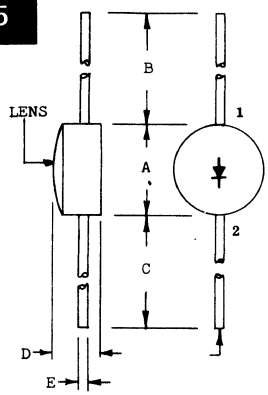

	A	B	C	D	E	1	2	CHAMFERED EDGES	LENS
A185	.472 MAX	1.57 MIN	1.57 MIN	.216 MAX	.027	A	C		YES
A185a	.350	1.77	.158	.220	.024			YES	YES
A185b	.500 MAX	.475 MIN	.475 MIN	.175 MAX	.03x.015			YES	NO
A185d	.635 MAX	1.00 MIN	1.00 MIN	.165 MAX	.02x.05			YES	NO
A185e	.240 MAX	.100 MIN	1.00 MIN	.160 MAX	.020			YES	NO
A185f	.140	.180 MIN	.180 MIN	.030	.002			NO	NO
A185g	.374 MAX	2.36 MIN	2.36 MIN	.236 MAX	.019			YES	NO

A188

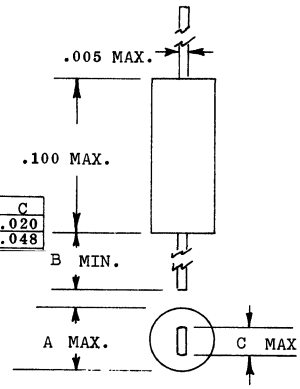

	A	B	C
A188	.060	.600	.020
A188a	.085	.900	.048

15. OUTLINE DRAWINGS

IN DRAWING NUMBER SEQUENCE

A189

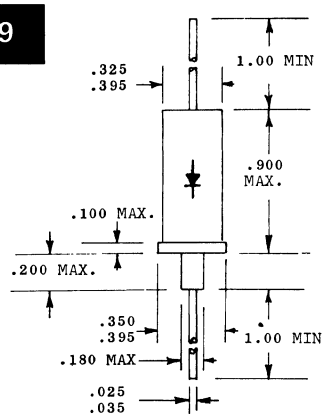

A196

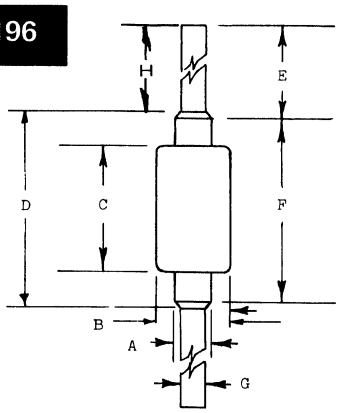

	A	B	C	D	E	F	G	H
A196	.040	.072	.090		.800 MIN	.160 MAX	.030± .002	
A196a	.055	.100	.100		.800 MIN	.160 MAX	.030± .002	
A196b		.105 MAX		.300 MAX	1.00 MIN	.265 MAX	.021 MAX	
A196c	.040	.085 MAX	.100 MAX		1.0 MIN	.160 MAX	.020	
A196d	.038 .042	.060 .090	.130 MAX	.225 .260	1.0 MIN	.125 .160	.028 .032	
A196e		.100 MAX	.085		1.0 MIN	1.60 MAX	.028 .032	
A196f		.150		.280 MIN			.040	1.00 MIN

A200

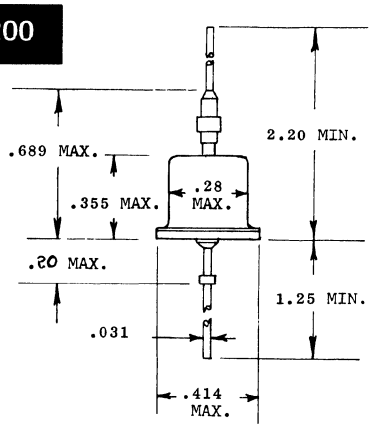

A201

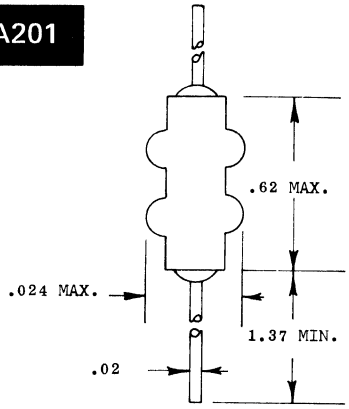

A220

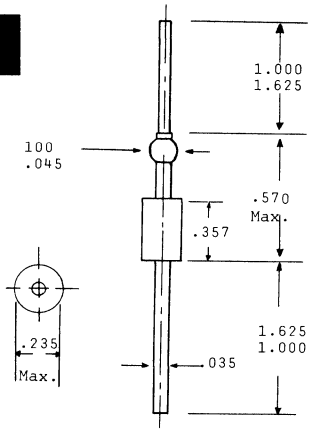

A221

	A	B	C	D
A221	.197	1.417 MIN	.434 MAX	.028
A221a	.197	1.42	.434	.023
A221b	.197	1.42	.434	.028
A221d	.236	.787	.394	.027
A221e	.236	.984	.433	.024
A221f	.236	1.42	.434	.028
A221g	.236	2.36	.433	.019
A221h	.275	1.34	.472	.031

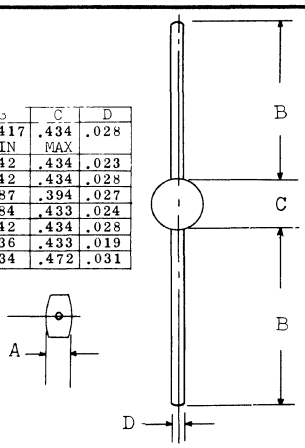

A222

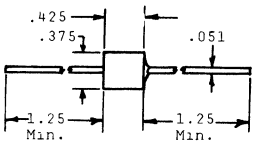

A229

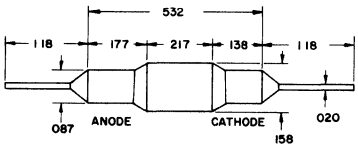

A230

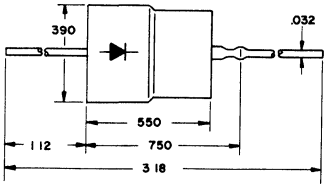

A231

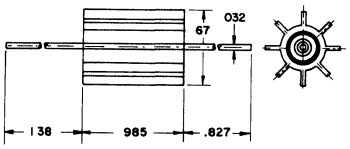

A239

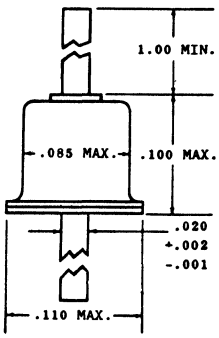

A239a - Same as A239 but with reverse polarity.

15. OUTLINE DRAWINGS

IN DRAWING NUMBER SEQUENCE

A243

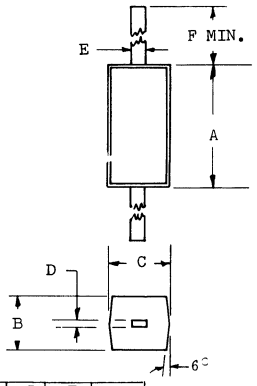

	A	B	C	D	E	F
A243	.275	.099	.081	.03	.015	1.00
A243a	.082	.042	.042	.02	.004	.500

A244

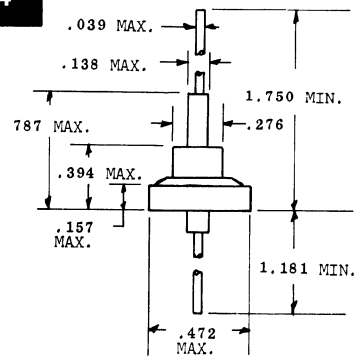

A246

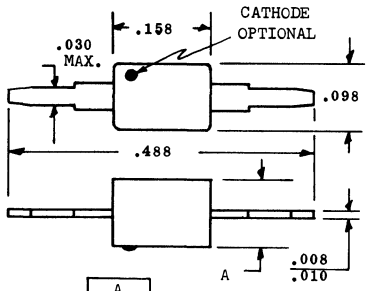

	A
A246	.094
A246a	.080

A247

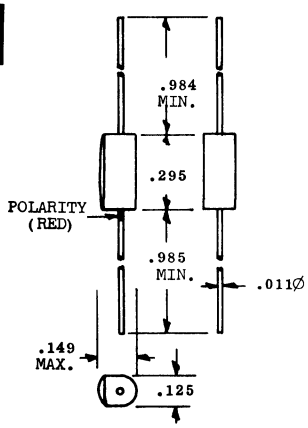

A248

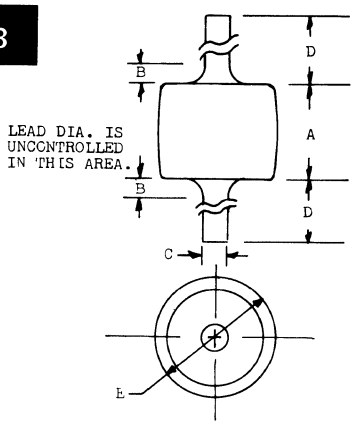

	A	B	C	D	E	CHAMFERED EDGES
A248	.130 .160	.030 MAX	.037 .041	.900 MIN	.125 .155	YES
A248a	.130 .160	.030 MAX	.037 .041	.900 MIN	.145 .180	YES
A248b	.130 .160	.050	.037 .042	.900 1.250	.115 .180	NO
A248d	.140 .165	NA	.029 .033	1.250 MIN	.065 .110	NO
A248e	.140 .165	.030 MAX	.029 .033	1.00 1.25	.065 .110	NO
A248f	.140 .300	.050	.030 .042	1.00 1.50	.090 .145	NO
A248g	.165 MAX	NA	.038 .042	.9175 MIN	.180 MAX	NO
A248J	.200 .260	.030 MAX	.049 .053	.900 1.25	.160 .230	YES
A248k	.300 .435	.050 MAX	.027 .034	1.00 MIN	.150 .185	NO

A249

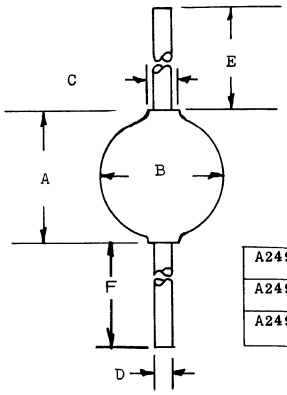

	A	B	C	D	E	F
A249	.240 .260	.250 MAX	.083 MIN	.053 MAX	1.000 MIN	1.000 MIN
A249a	.196 MAX	.177 MAX		.035 MAX	.984 MIN	.984 MIN
A249b	.275 MAX	.130 .150		.028 .032	1.13	

A250

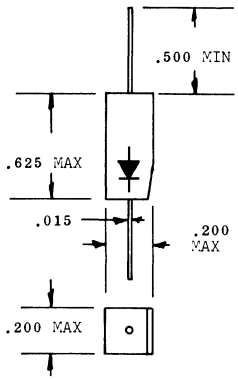

A253

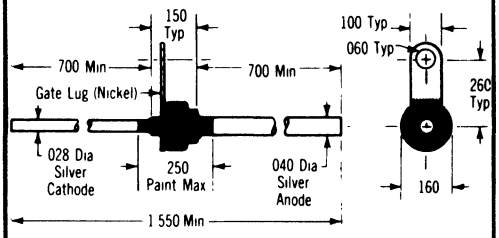

A254

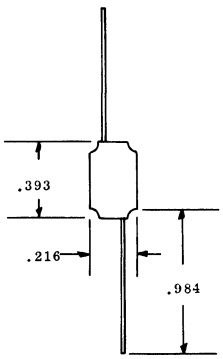

A255

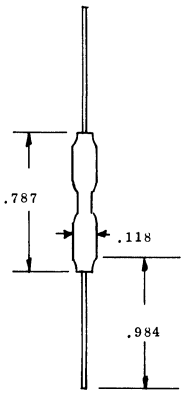

15. OUTLINE DRAWINGS

IN DRAWING NUMBER SEQUENCE

A256

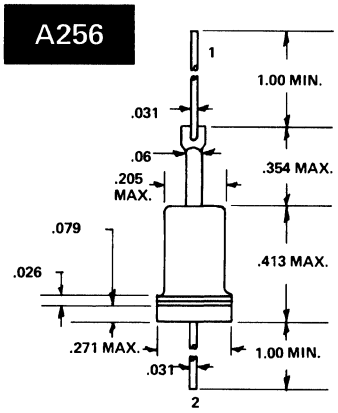

A257

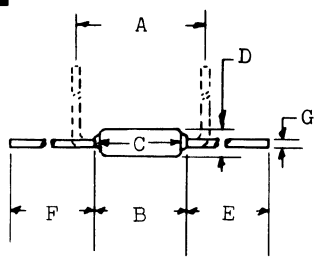

	A	B	C	D	E	F	G	CHAMFERED EDGES
A257	.200	.177 MAX		.072	.944 MIN	.944 MIN	.021 MAX	YES
A257a	.299	.250 MAX	.133 MAX	.082 MAX	1.00 MIN	1.00 MIN	.021 MAX	NO

A261

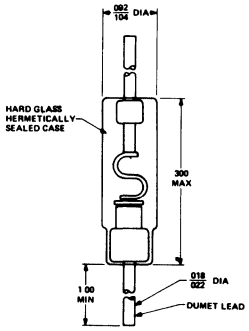

A263

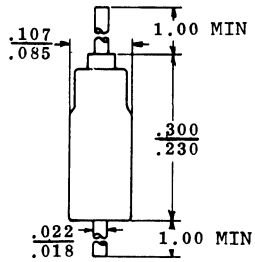

A264

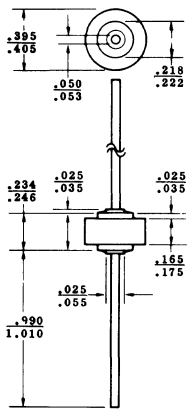

A265

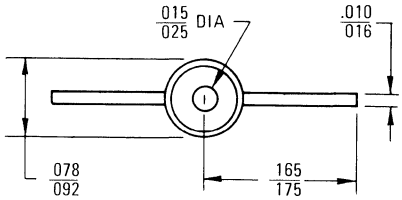

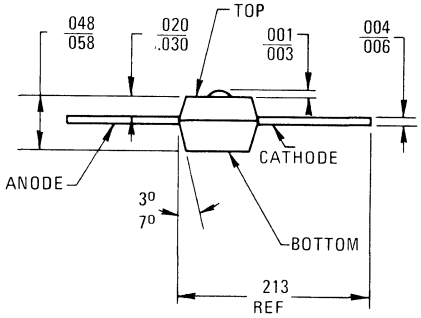

A266

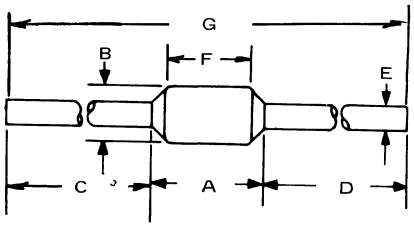

	A	B	C	D	E	F	G
A266	.170	.085	1.00 MIN	1.00 MIN	.027 .029		
A266a	.230 .330	.100 .110			.038 .040	.190 .210	2.06 2.18

A267

	A	B	C	D	E
A267	.740 .760	.249 .251	.249 .251	2.00	.031 .033
A267a	1.49 1.51	.249 .251	.249 .251	2.00	.031 .033
A267b	1.99 2.01	.249 .251	.249 .251	2.00	.031 .033
A267c	2.49 2.51	.249 .251	.249 .251	2.00	.031 .033
A267d	3.49 3.51	.249 .251	.249 .251	2.00	.031 .033
A267e	.650	.125	.125	.500	.018

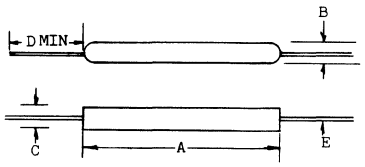

A268

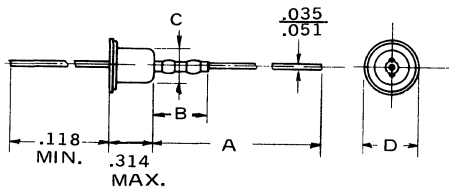

	A	B	C	D	CHAMFERED EDGES
A268	1.25	.314 .393	.275	.433	YES
A268a	1.25	.314 .393	.275	.433	NO
A268b	1.68	.425 .440	.334 .358	.511	YES

A269

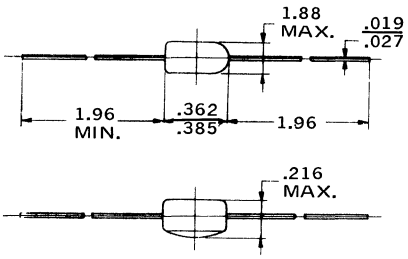

A270

	A	B	C	D
A270	.334 MAX	.019	.157 MAX	.157 MAX
A270a	.472 MAX	.027	.236 MAX	.236 MAX

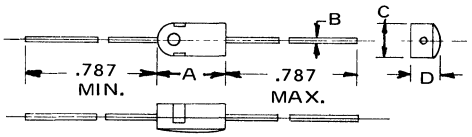

15. OUTLINE DRAWINGS

IN DRAWING NUMBER SEQUENCE

A271

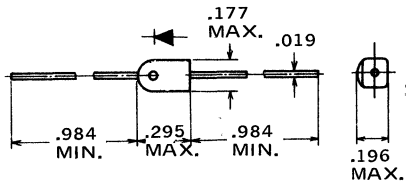

A272

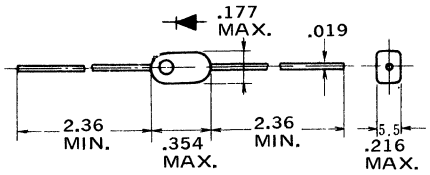

A273

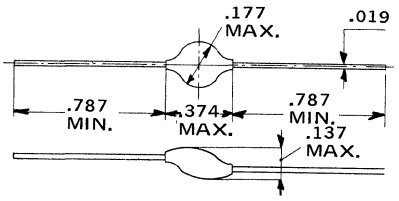

A274

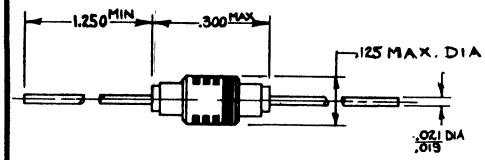

A275

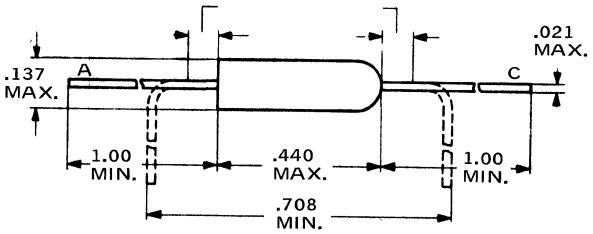

C1

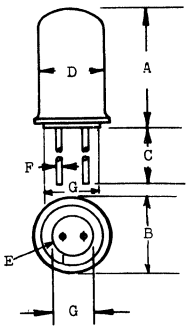

	A	B	C	D	E	F	G
C1	.350 .370	.210 .230	1.125	.180 .200	.045 .055	.019 .021	NA
C1a	.334	.246	1.58		.070	.018	NA
C1aa	.310	.255	1.50	.229	.100	.018	NA
C1ab	.591 MAX	.204 MAX	1.45 MIN	.204 MAX	.083	.017	NA
C1c	.618 MAX	.220 .232	1.45 MIN	.220 .232	.083	.017	NA
C1d	.386	.232	1.57 MIN	.232	.063	.017	NA
C1e	.430	.270	1.20 MIN	.270	.063	.017	NA
C1f	.433	.252	1.25	.236	.055	.020	.138
C1g	.406	.252	1.10	.236	.071	.020	.157

C3

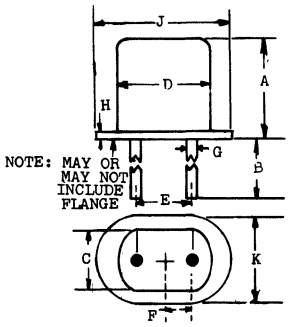

	A	B	C	D	E	F	G	H	J	K
C3	.220 MAX	1.50 MIN	.140 MAX	.210 MAX	.086	.043				
C3c	.423 .443	1.500 1.562	.307 .317	.715 .725	.478 .494		.025 .030	.055 .075	.745 .757	.340 .350
C3d	.816 .836	1.500 1.562	.307 .317	.715 .725	.478 .494		.025 .030	.055 .075	.745 .757	.340 .350
C3e	.255 MAX	1.00 MIN			.080		.016		.265 MAX	.155 MAX
C3g	.748	.984	.314		.500		.031		.728	

C5a

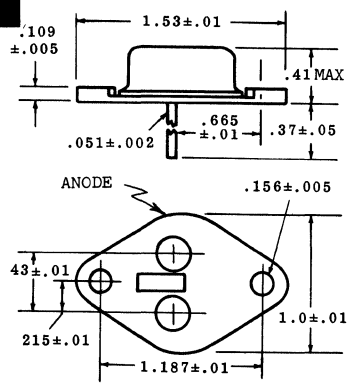

15. OUTLINE DRAWINGS

IN DRAWING NUMBER SEQUENCE

C6

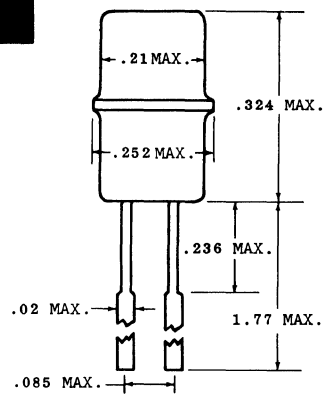

C7

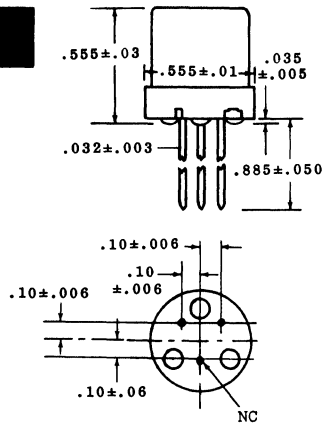

C8

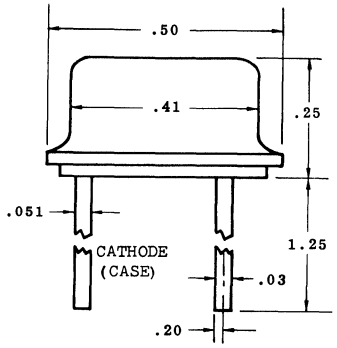

C9

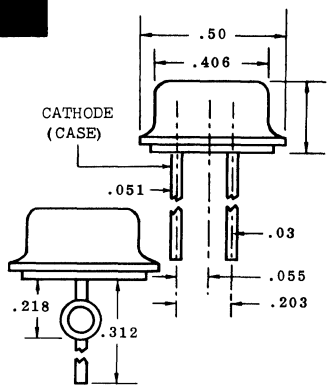

C12

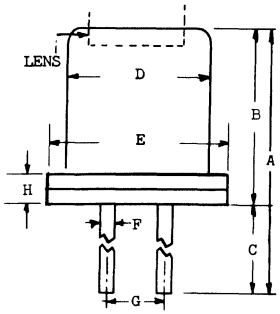

	A	B	C	D	E	F	G	H	LENS
C12		.426 MAX	.880 1.000	.338 MAX	.417 MAX	.039 .043	.115 .135	.047 MAX	NO
C12a	1.50 MAX	.350 MAX	1.00 MIN	.200 MAX	.225 MAX	.020	.050		NO
C12b		.394 MAX	1.49 MIN		.216 MAX	.0177	.071		NO
C12c		.200 .260	.500 MIN	.275 .335	.290 .370	.016 .019	.200	.155 MAX	YES

C13

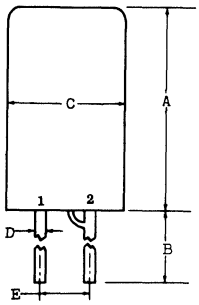

	A	B	C	D	E	1	2
C13	.430 MAX	1.46 MIN	.240 MAX	.058	.072		
C13a	.218 MAX	1.18 MIN	.154 MAX	.012	.051	A	C
C13b	.402 MAX	1.50 MIN	.236 MAX	.018	.070	A	C

C14

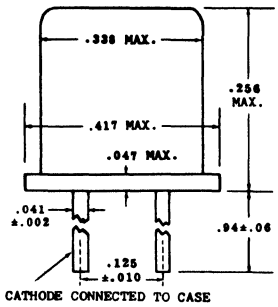

C15

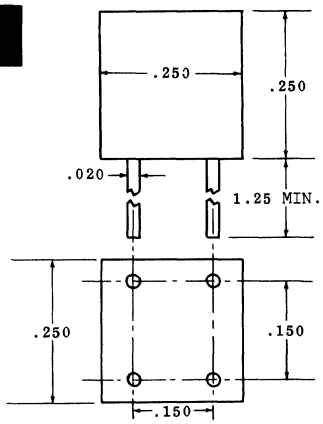

C16

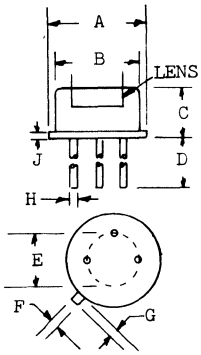

	A	B	C	D	E	F	G	H	J	1	2	3	LENS
C16	.230 MAX	.195 MAX	.148 MAX	1.50 MIN	.100	.041	.048 MAX	.016 .019	.030 MAX	C	C	A	NO
C16a	.230 MAX	.195 MAX	.210 MAX	1.50 MIN	.100	.041	.048 MAX	.016 .019	.030 MAX	A		C	NO
C16c	.366	.335	.160 .180	.985 1.01		.035	.045	.017 .021					NO
C16d	.360	.350	.268	1.580	.197	.034	.034	.018					NO
C16e		.335 .355	.260	1.43 1.57	.200	.028 .036	.028 .036	.018 .020					NO
C16f	.230	.196	.170 .210	.500 MIN	.100	.041	.038	.019					NO
C16g	.366	.330	.240 .260	.975 1.02	.190 .210	.029 .045	.028 .035	.015 .035					NO
C16h	.358 .362	.322 .326	.139 .146	.850 MAX	.198 .202	.028 .032	.028 .042	.020	.028 .032				NO
C16j	.370	.311	.259	.150	.200			.017		A		C	.197
C16n	.208 .230	.178 .195	.195 .205	.500 MIN	.100	.036 .046	.028 .048	.012 .019	.020 MAX	C	G	A	YES
C16p	.360	.330	.165	1.50	.100			.018		A	G	C	YES
C16q	.245	.182	.200	1.50	.050			.018		A	G	C	YES
C16r	.335 .370	.305 .335	.240 .260	1.50 MIN	.200	.028 .034	.029 .045	.016 .019	.009 .125				YES
C16s	.208 .230	.178 .196	.170 .210	.500 MIN	.100	.036 .046	.028 .048	.016 .019	.030 MAX				YES
C16t	.370 MAX	.305 .335	.360 .390	1.500 MIN	.190 .210	.028 .034	.029 MIN	.016 .019	.009 .125				YES
C16u	.335 .370	.305 .335	.240 .260	1.50 MIN	.200	.028 .034	.029 .045	.016 .019	.009 .125	A		C	NC
C16v	.335 .370	.305 .335	.240 .260	1.50 MIN	.200	.028 .034	.029 .045	.016 .019	.009 .125	A	C		NO
C16w	.335 .370	.305 .335	.240 .260	1.50 MIN	.200	.028 .034	.029 .045	.016 .019	.009 .125	A1	G	A2 C	NO
C16x	.335 .370	.305 .335	.240 .260	1.50 MIN	.200	.028 .034	.029 .045	.016 .019	.009 .125	C	G	A C	NO
C16y	.370	.334	.259	.748	.200	.031	.031	.017		TERM 1	GATE	TERM 2	NO
C16z	.335 .370	.305 .335	.240 .280	.970 MIN	.200	.028 .034	.029 .045	.016 .019	.009 .125				NO
C16aa	.358 .362	.322 .326	.175	.850 MAX	.198 .202			.020	.028 .032	C	G	A	NO
C16ab	.335 .366	.330 MAX	.240 .260	.975 1.02	.190 .210	.028 .035	.029 .045	.017 .021		TERM 1	G	TERM 2	NO
C16ac	.335 .366	.330 MAX	.240 .260	.975 1.02	.190 .210	.028 .035	.029 .045	.017 .021		C	G	A	NO
C16ad	.335 .370	.305 .335	.200 .220	1.50 MIN	.200	.028 .034	.029 .045	.016 .019		C	A	CASE	YES

C18

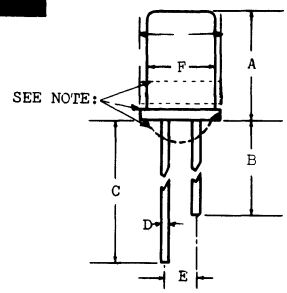

NOTE: FLANGE MAY APPEAR AT ANY POINT ON PACKAGE OR NOT AT ALL.

	A	B	C	D	E	F	G
C18a	.335	1.18 MIN	1.45 MIN	.018	.087	.200	.230
C18b	.335	1.18 MIN	1.45 MIN	.015	.087	.200	.230
C18c	.543 MAX	.472 MIN	.985 MIN	.020	.075	.205 MAX	
C18d	.335 MAX		1.18 MIN	.018	.087		.236 MAX
C18e	.269 MAX		1.16 MIN	.0138	.029		.130 MAX
C18f	.276 MAX	1.18 MIN		.018	.087	.197 MAX	.228 MAX
C18g	.410 MAX	1.38 MIN	1.50 MIN	.017	.071	.240 MAX	
C18h	.551 MAX	1.263 MIN	1.460 MIN	.028	.150	.276 MAX	.276 MAX

C23

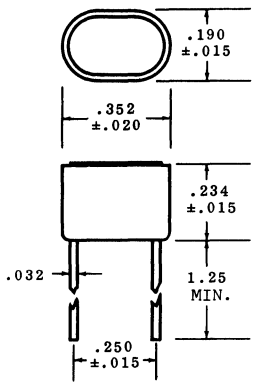

C24

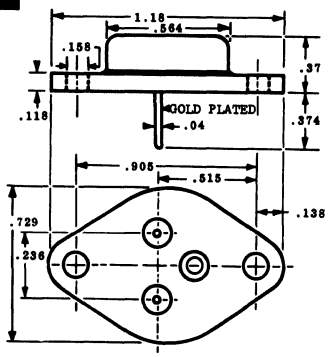

C26

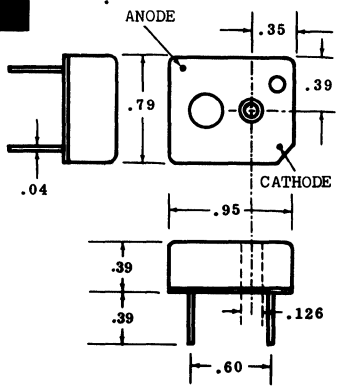

C29

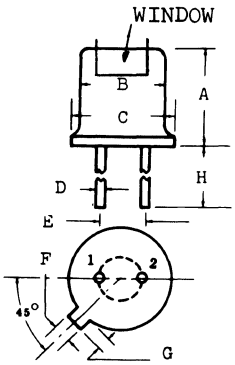

	A	B	C	D	E	F	G	H	1	2	WINDOW
C29	.210 MAX	.195 MAX	.230 MAX	.024 MAX	.100	.040	.041	1.00			NO
C29a	.291	.185	.216	.017	.098			1.00			NO
C29b	.075	.187	.219	.016		.041	.038	.500			NO
C29c	.181 .210	.178 .189	.209 .230	.030	.100	.036 .045	.033 .046	.500			NO
C29d	.170 .210	.177 .192	.240 MAX		.090 .110	.035 .045	.019 .048	1.00 MIN			NO
C29e	.170 .210	.179 .195	.210 .230	.018	.100	.042	.038	.500 MIN			NO
C29f	.204	.192	.224	.017	.100	.039	.039	.500	A	C	.078
C29g	.204	.182	.210	.017	.100	.039	.039	1.50	C	A	.120
C29h	.291	.185	.216	.015	.100	.039	.039	1.18	A	C	.100
C29j	.295	.193	.217	.017	.985	.040	.040	1.50			NO
C29k	.145	.183	.210					1.50	A	C	YES
C29m	.134 .210	.180 .195	.225 MAX	.015 .019	.100	.046 MAX	.048 MAX	1.50 MIN			NO
C29n	.900	.178 .195	.209 .230	.012 .019	.100	.036 .046	.028 .048	.500 MIN	C	A	NO
C29p	.208 MAX	.194 MAX	.228 MAX	.017	.100	.039	.041	.984 MIN			NO
C29q	.248	.188	.224	.019	.100			.511			YES

C41

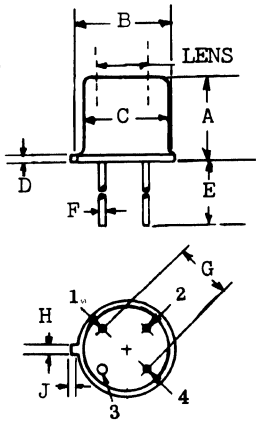

	A	B	C	D	E	F	G	H	J	1	2	3	4	LENS
C41	.255 MAX	.360 MAX	.330 MAX	.017 MAX	.500 MAX	.016 .019	.200	.031	.034	C	G	A		NO
C41b	.180 MAX	.366 MAX	.335 MAX		.500 MAX	.016 .019	.200	.031	.034	C	G			NO
C41d	.155 MAX	.230 MAX	.195 MAX	.030 MAX	.500 MAX	.016 .019	.200	.031	.034	C	G	A		NO
C41e	.200 .225	.209 .230	.178 .195	.030 MAX	.500 MIN	.016 .019	.100	.028 .048	.036 .046	C	CG	A	AG	YES
C41f	.195 .205	.209 .230	.178 .195	.020 MAX	.500 MIN	.016 .019	.100	.028 .048	.036 .046	C	G	A		YES
C41g	.200	.209 .230	.178 .195		1.50	.016 .019	.100	.028 .048	.036 .046	C	CG	AG	A	YES
C41h	.245	.370	.325	.010	.500	.016	.200	.028	.029	C	G	A		NO
C41j		MAX		.030	MIN	.019		.034	.039	C	A	G		NO
C41k	.208	.224	.188		.511	.019	.100			C	CG	A	CA	NO
C41m	.248	.224	.188		.511	.019	.100			C	G1 CG	A	G2 CG	YES

C42

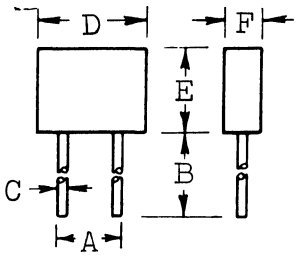

	A	B	C	D	E	F
C42	.118 MIN	1.58 MIN	.0275	.495 MAX	.690 MAX	.169 MAX
C42a	1.60	.750	.300	1.92	.500	.450
C42b	1.50	.750	.300	1.92	.500	.450
C42c	1.00	.750	.300	1.24	.500	.420
C42d	.600	.880	.300	.765	.500	.290
C42e	.300	.880	.300	.600	.490	.290
C42f	.200	.880	.300	.375	.500	.190
C42g		.500	.200	.310	.470	.200
C42j	.200	.180	.030	.330	.220	.140
C42l	.300	1.00	.030	.525	.500	.220
C42m	.600	1.00	.030	.750	.500	.220
C42n	1.00	1.00	.030	1.20	.500	.220
C42p	1.30	1.00	.030	1.50	.500	.220
C42r	2.30	1.00	.030	2.50	.500	.220
C42s	.300	1.20	.030	.433	.270	.220
C42t	.295	.984	.032	.433	.256	.224
C42u	.250	1.00 MIN		.625	.688	.375

C50

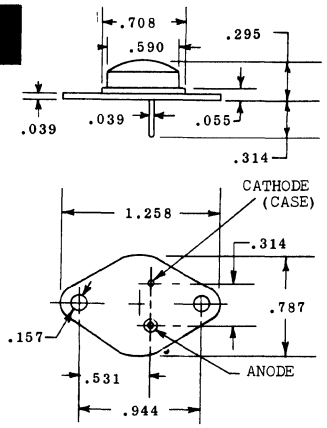

C53

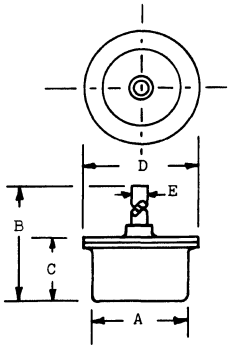

	A	B	C	D	E
C53	.807	1.295	.295	.944	.03
C53a	.34	.73	.275	.42	.051

C63

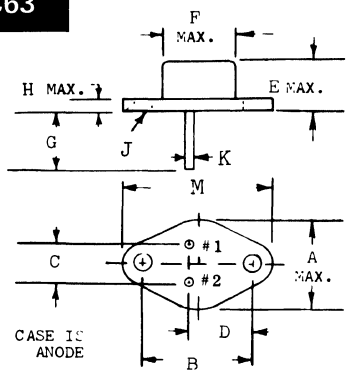

	A	B	C	D	E	F	G	H	J	K	M	1	2
C63	.830 MAX	.950	.320	.530	.300 MAX	.630 MAX	.320	.140 MAX	.134 .166	.032 .048	1.25 MAX		
C63a	.712 MAX	.906	.236	.516	.335 MAX	.571 MAX	.386	.087 MAX	.134 .166	.032 .048	1.25 MAX	C	G
C63b	.728 MAX	.905	.236	.516	.256 MAX	.571 MAX	.374	.032 MAX	.134 .166	.032 .048	1.25 MAX	A	C
C63c		.958 .962	.190 .210	.570 .590	.250 .340	.500 MAX	.360 MIN	.100 MAX	.350 MAX	.028 .034		G	C
C63d		.958 .962	.190 .210	.570 .590	.250 .340	.500 MAX	.360 MIN	.100 MAX	.350 MAX	.028 .034		C	G
C63e	.750	.937 .951	.190 .210	.568 .588	.295	.590	.366 .432	.082		.029	.125 MAX	C	G
C63f	THE SAME EXCEPT CASE IS TERMINAL 2											T 1	

C71

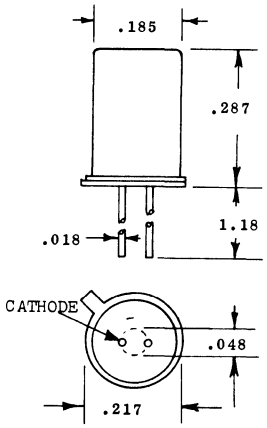

C73

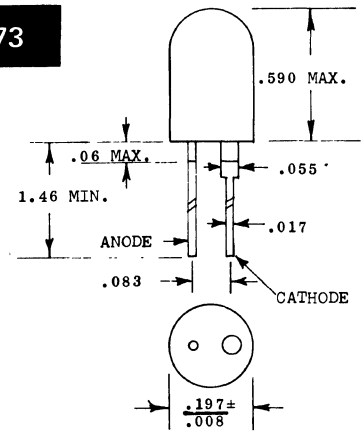

C74

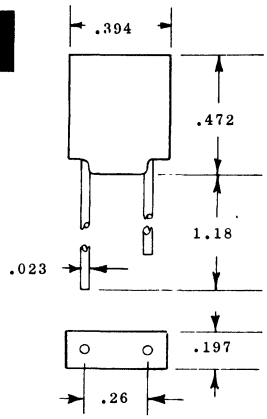

C76

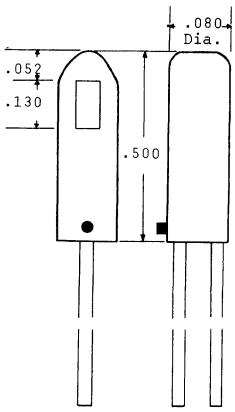

15. OUTLINE DRAWINGS

IN DRAWING NUMBER SEQUENCE

C77

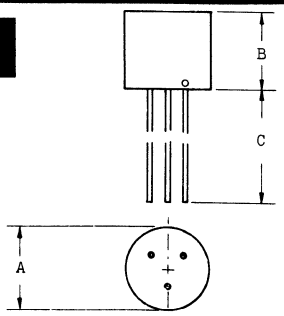

	A	B	C
C77	.375	.500	1.25
C77a	.400	.375	.180

C81

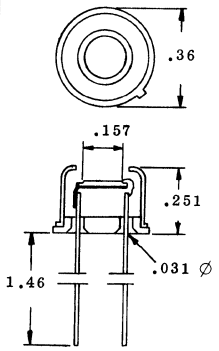

C84

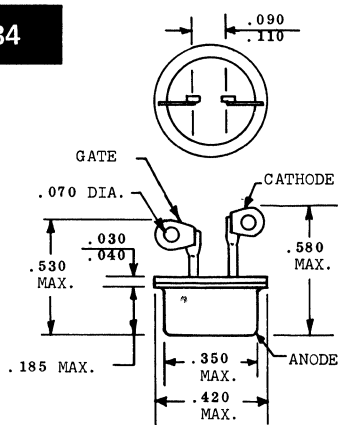

C85

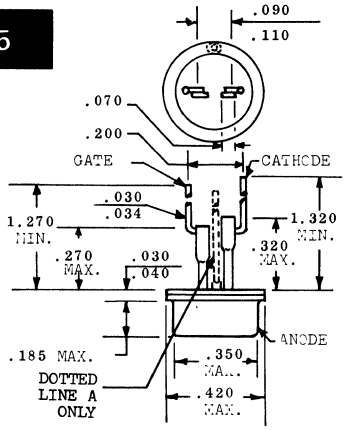

C87

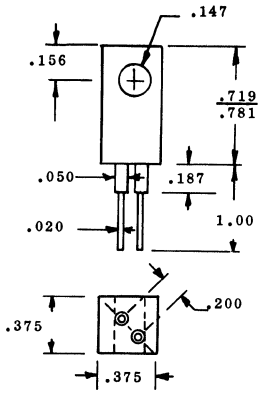

C90

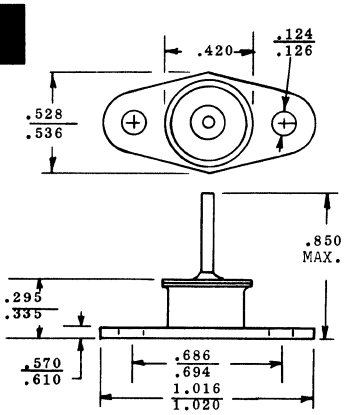

C92

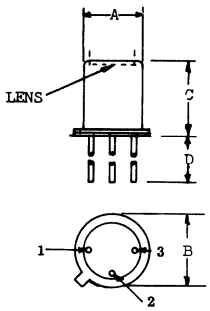

	A	B	C	D	E	F	G	H	1 A	2 S	3 C	LENS
C92	.189		.197	1.50 MIN								.155
C92a	.322 .326	.358 .362	.139 .146	.850 MAX	.028 .032	.020	.038 .042	.028 .032				NO

C93

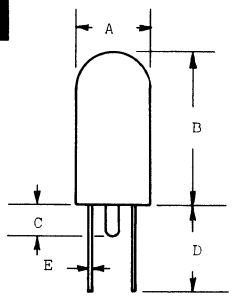

	A	B	C	D	E
C93	.567	1.33	.188	1.48	.011
C93a	.600	1.42	.200	1.50	.011

C98

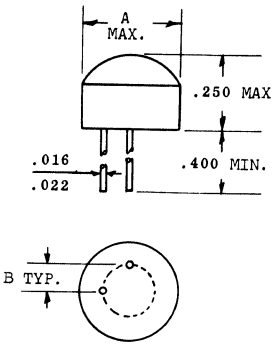

	A	B
C98	.215	.05
C98a	.330	.10

C101

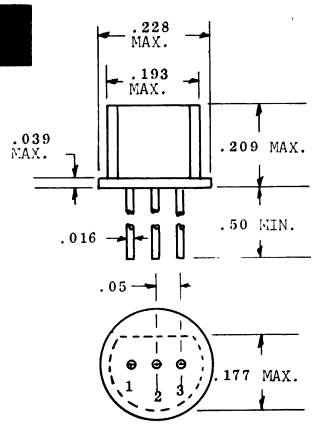

C103

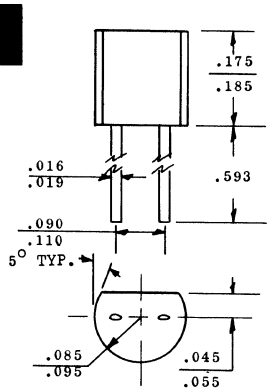

C104

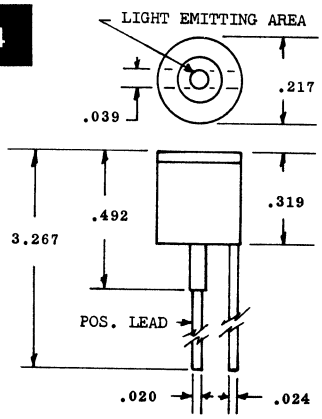

15. OUTLINE DRAWINGS

IN DRAWING NUMBER SEQUENCE

C105

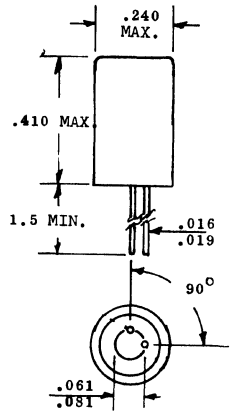

C110

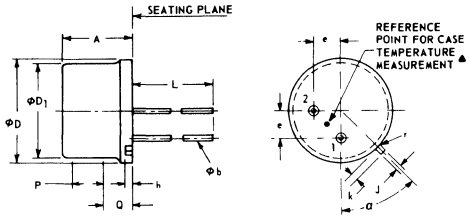

SYMBOL	INCHES MIN	INCHES MAX
A	240	260
Φb	017	021
ΦD	355	366
ΦD1	323	335
e	100 TRUE POSITION	
h	015	035
J	028	035
k	029	045
L	975	1 025
P	100	
Q		
r		007
α	42°	48°

C112

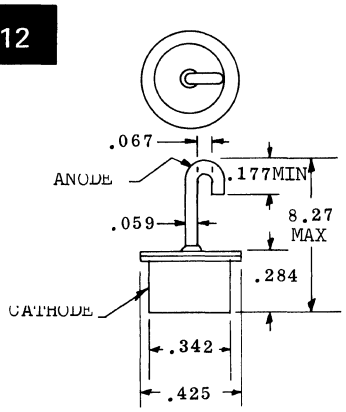

C113

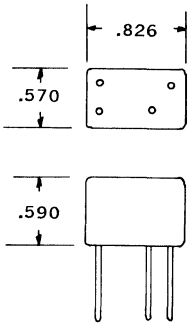

C116

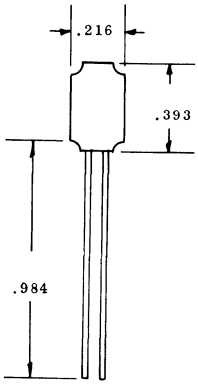

C117

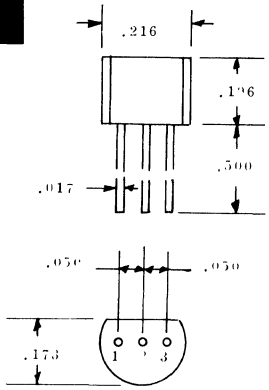

C118

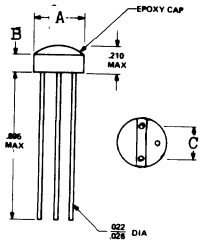

	A	B	C
C118	.305 / .315	.105 / .115	.200
C118a	.345 / .355	.095 / .105	.250

C120

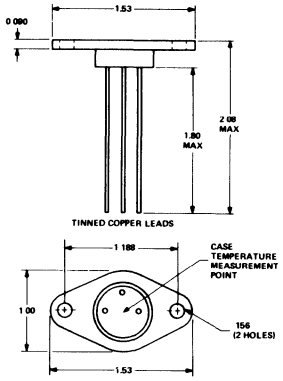

C121

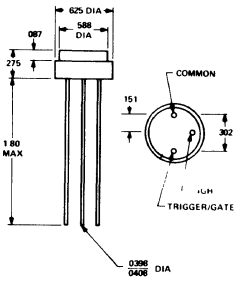

C123

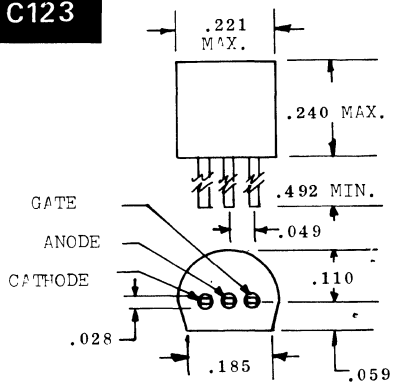

C124

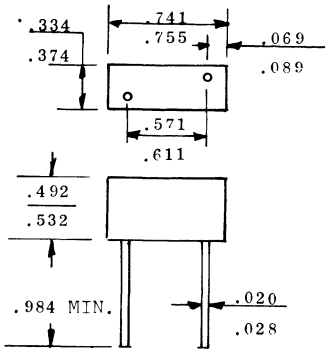

15. OUTLINE DRAWINGS

IN DRAWING NUMBER SEQUENCE

C126

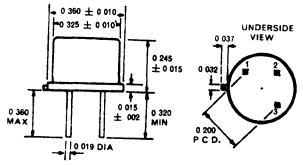

C127

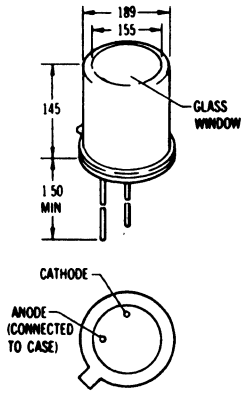

C129

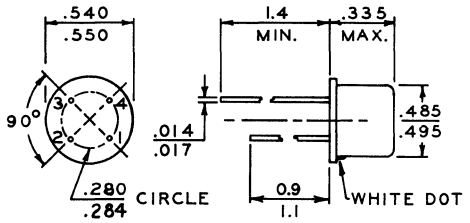

C130

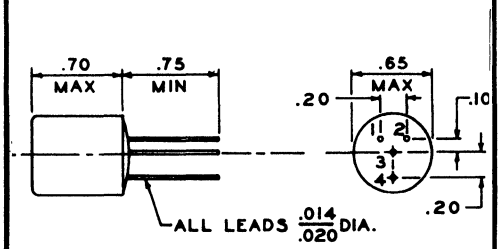

C131

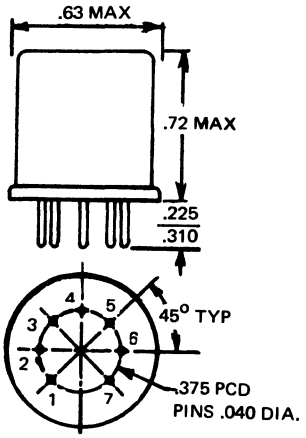

C132

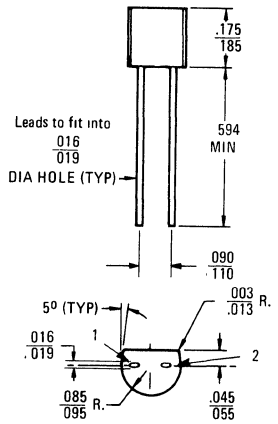

C133

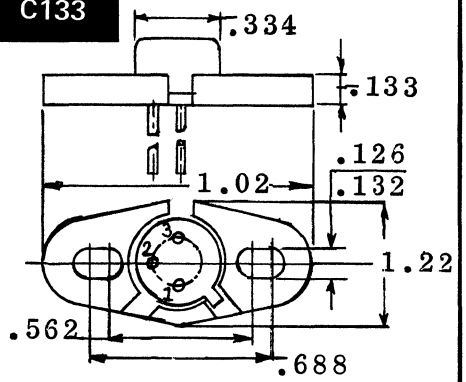

C134

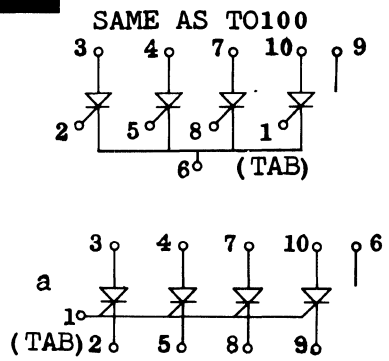

C135

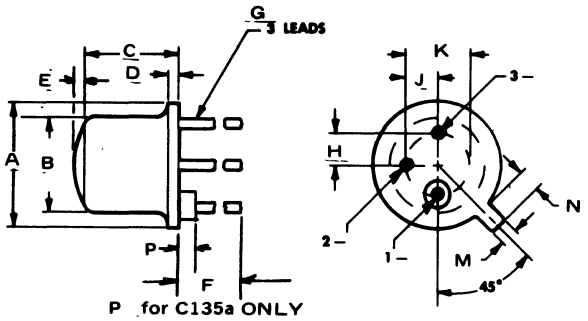

	A	B	C	D	E	F	G	H	J	K	M	N	P	1	2	3
C135	.209 .230	.178 .195	.170 .210	.030 MAX		.500 MIN	.016 .019	.050	.050	.100	.036 .046	.028 .048		C	NC	A
C135a	.209 .229	.182 .188	.187 .195		.010 .030	.500 MIN		.050	.050	.095 .105	.040		.015 MAX	C	NC	A

C136

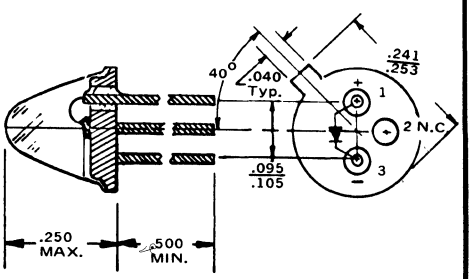

DO1

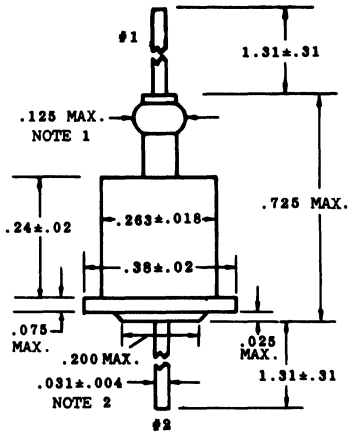

NOTES:

1. *Dim. to allow for pinch or seal deformation anywhere along tabulation (optional).
2. Dim. to be controlled from free end of lead to within .188 inch from the point of attachment to the body. Within the .188 inch dimension, the dia. may vary to allow for lead finishes and irregularities.

DO2

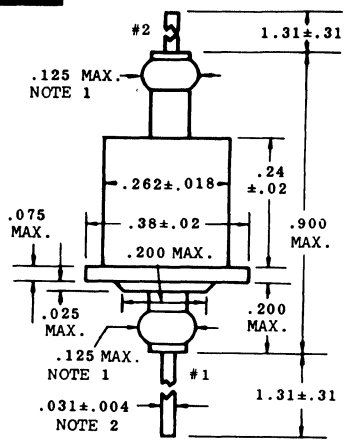

NOTES:

1. *Dim. to allow for pinch or seal deformation anywhere along tabulation (optional).
2. Dim. to be controlled from free end of lead to within .188 inch from the point of attachment to the body. Within the .188 inch dimension, the dia. may vary to allow for lead finishes and irregularities.

DO 3

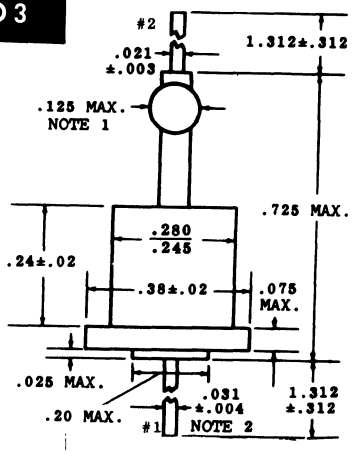

NOTES: (for DO 3)

1. Dim. to allow for pinch or seal deformation anywhere along tabulation(optional).
2. Dim. to be controlled from free end of lead to within .188 inch from the point of attachment to the body. Within the .188 inch dim., the dim. may vary to allow for lead finishes and irregularities.

DO4

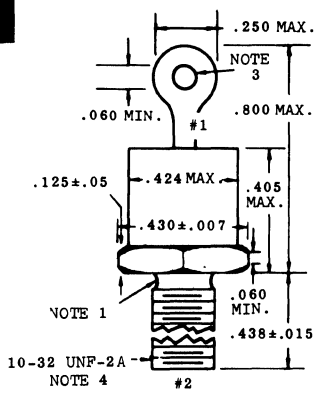

NOTES FOR DO4:

1. Dia. of unthreaded portion .189 max., .163 min.
2. Complete threads to extend to within 2 1/2 threads of head.
3. Angular orientation of this terminal is undefined.
4. Max. pitch dia. of plated threads shall be basic pitch dia. .1697 Ref.(Screw thread standards for federal services 1957) Handbook H28 1957 P1.

DO5

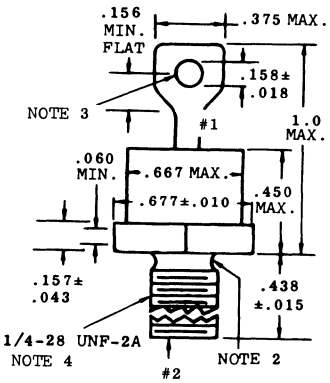

NOTES FOR DO5:

1. Dia. of unthreaded portion .249 max., 220 min.
2. Complete threads to extend to within 2 1/2 threads of heads.
3. Angular orientation of this terminal is undefined.
4. Max. pitch dia. of plated threads shall be basic pitch dia. .2268 Ref.(Screw thread standards for federal services 1957) Handbook H28 1957 P1.

DO7

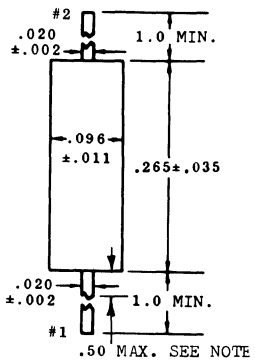

NOTE:
Within this zone, Diameter may vary to allow for lead finishes and irregularities.

DO8

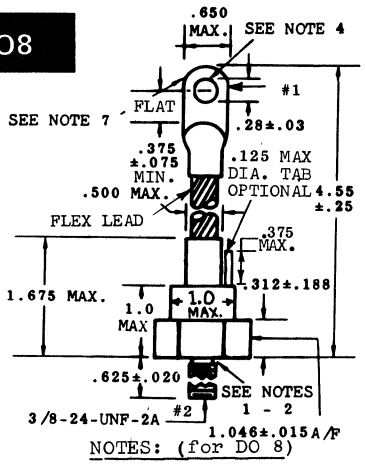

NOTES: (for DO 8)

1. Complete threads to extend to within 2-1/2 threads of head
2. Dia. of untreaded potion .359±.015.
3. Screw thd. standards for federal services (1957 Handbook H28 Pt. 1) apply to UNF-2A thd.
4. Angular orientation of this terminal is undefined.
5. Unit will not be damaged by torque of 100 lb.-in. applied to a non-lubricated 3/8-24-UNF-2B nut assembled on thd.
6. A Chamfer(or undercut) on one or both ends of hexagonal portions is optional.
7. Square or Radius on end of terminal is optional.
8. Flexible lead.

DO9

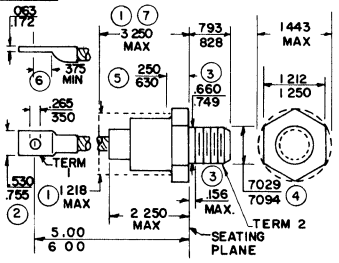

DO9 NOTES:

1. The device with exception of the hexagon, thread, and flexible lead extension lies within the cylinder defined by 1.218 and length 3.25.
2. Angular orientation of terminal with respect to hexagonal portion is undefined. Square or radius on end of terminal is optional.
3. Length of incomplete or undercut threads.
4. Pitch diameter of 3/4-16 UNF-2A (coated) threads (ASA B1.1-1960).
5. A chamfer (or undercut) on one or both ends of the hexagonal portion is optional.
6. Minimum flat.
7. Seated height with lead bent at right angle.

DO10

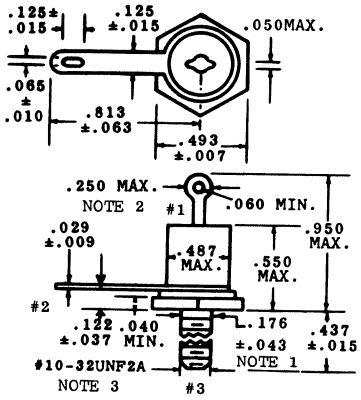

NOTES: (for DO10)

1. Complete threads to extend to within 2-1/2 threads of seating plane.
2. Angular orientation of terminals is undefined. Square or radius on ends of terminals is optional.
3. 10-32 UNF-2A. Maximum pitch dimeter of plated threads shall be basic pitch diameter (.1697) reference (screw thread standards for federal services 1957(handbook H28 1957 P1).

DO11

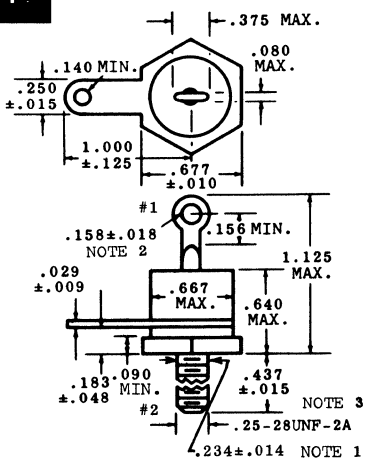

NOTES: (for DO11)

1. Complete threads to extend to within 2-1/2 threads of seating plane.
2. Angular orientation of terminals is undefined. Square or radius on ends of terminals is optional.
3. 1/4-28 UNF-2A. Maximum pitch dimeter of plated threads shall be basic pitch diameter (.2268) reference (screw thread standards for federal services 1957(handbook H28 1957 P1).

DO12

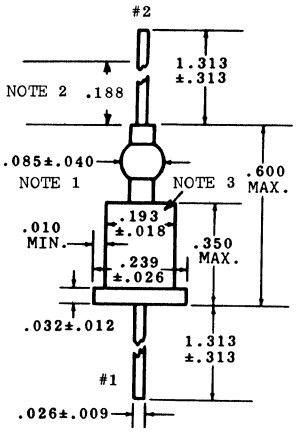

NOTES: (for DO12)

1. Dimension to allow for pinch of seal deformation anywhere along tabulation(optional).
2. Within this zone the diameter may vary to allow for lead finishes and irregularities.
3. Diameters ØD and $ØD_1$ shall differ by at least .010.

DO13

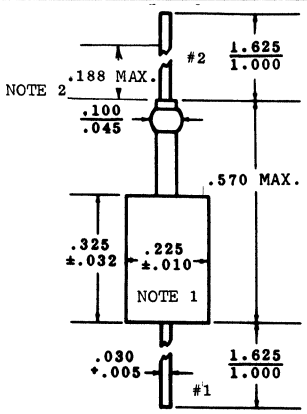

NOTES: (for DO13)

1. The major diameter is essentialy constant along its length.
2. Within this zone diameter may vary to allow for lead finishe and irregularities.
3. Dimension to allow for pinch or seal deformation anywhere along tabultion.

15. OUTLINE DRAWINGS

IN DRAWING NUMBER SEQUENCE

DO14 DO15

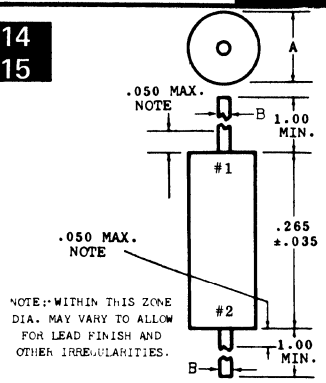

	A	B
DO14	.124±.016	.020±.002
DO15	.122±.018	.031±.004

DO16

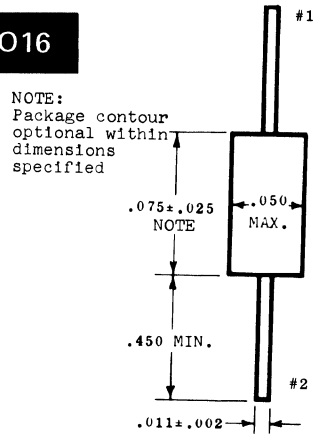

DO17

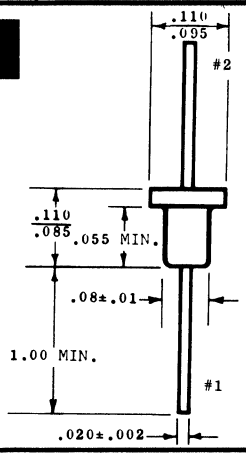

DO18

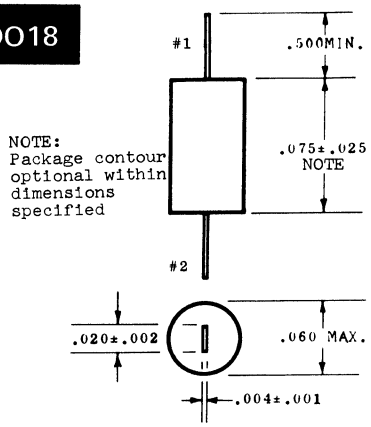

DO19

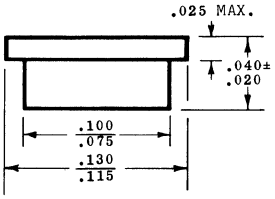

DO20

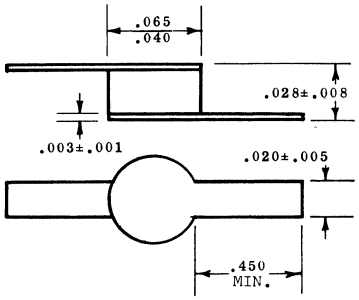

DO21

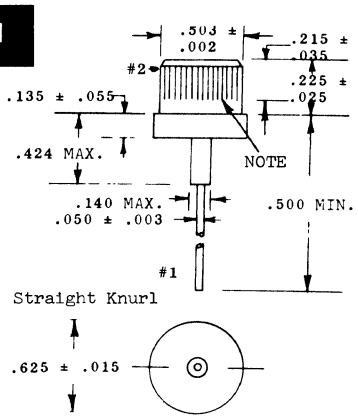

DO22

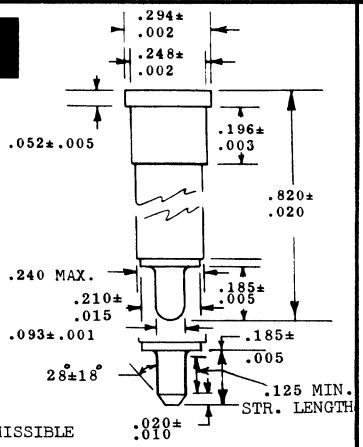

DO23

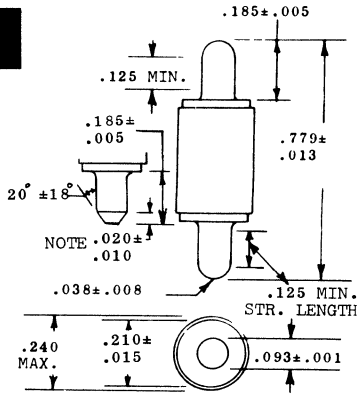

DO26

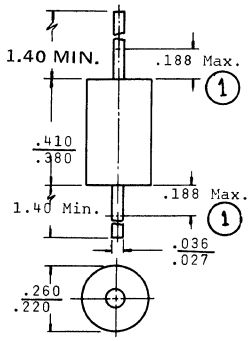

1. Within this zone, diameter is uncontrolled.

DO27

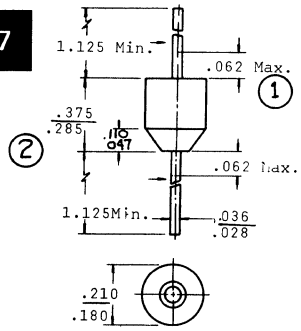

1. THIS END FOR VISUAL ORIENTATION ONLY (CONTOUR OPTIONAL).
2. LEAD DIAMETER NOT CONTROLLED IN THIS ZONE TO ALLOW FOR BODY FLASH AND LEAD FINISH BUILD-UP.

DO29

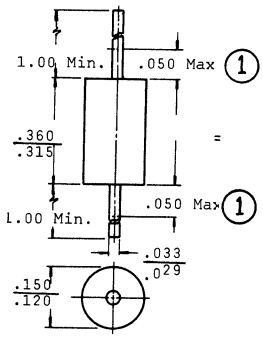

1. Within this zone the diameter may vary to allow for lead finishes and irregularities.

DO30

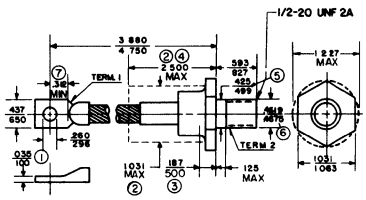

DO30

NOTES:
1. Contour and orientation of terminal lug is undefined.
2. The body of the device, with the exception of the flexible lead, lies within the cylinder defined by Diameter 1.031 and length 2.50
3. A chamfer (or undercut) on one or both ends of the hexagonal portion is optional.
4. Seated height with the lead bent at right angles.
5. Length of incomplete or undercut threads.
6. Pitch dia. of 1/2-20 UNF-2A (coated) threads (ASA B1.1).
7. Minimum flat.

DO31

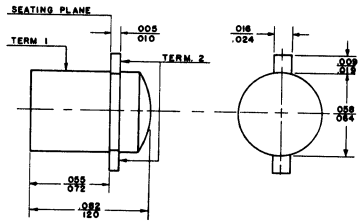

DO33

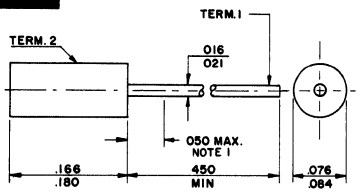

DO33

NOTES:
1. Within this zone the diameter may vary to allow for lead finishes and irregularities.

DO34

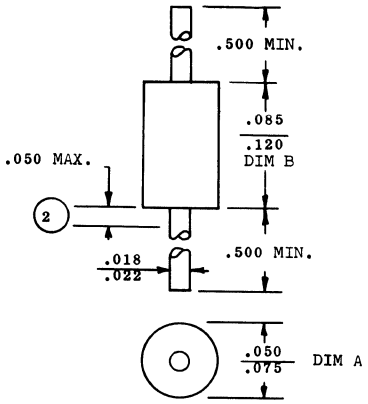

DO 34 NOTES:

1. Package contour optional within dimensions A & B. Slugs, if any, shall be included within this cylinder but shall not be subject to the minimum limit of Dim. A.
2. Lead diameter not controlled in this zone to allow for flash, lead finish build-up, and minor irregularities other than slugs.

DO35

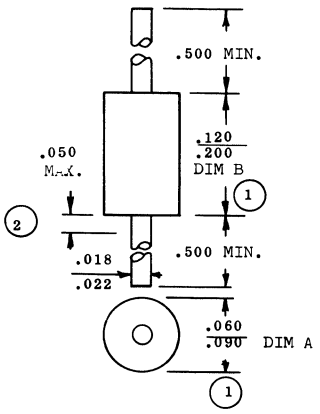

1. PACKAGE CONTOUR OPTIONAL WITHIN DIMENSIONS A & B. SLUGS, IF ANY, SHALL BE INCLUDED WITHIN THIS CYLINDER BUT SHALL NOT BE SUBJECT TO THE MINIMUM LIMIT OF DIM. A.
2. LEAD DIAMETER NOT CONTROLLED IN THIS ZONE TO ALLOW FOR FLASH, LEAD FINISH BUILD-UP, AND MINOR IRREGULARITIES OTHER THAN SLUGS.

DO37

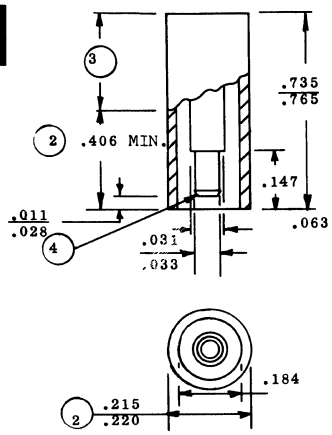

NOTES FOR DO37:

1. Axis of inner conductor shall not deviate more than .004 (0.101 MM) from axis of outer shell referred to its diameter.
2. Diameter .215/.220 applies to length .406. Diameter may vary beyond .406 to allow for finishes and marking.
3. Marking to be confined to this area.
4. End of terminal to have either radius or chamfer.

DO39

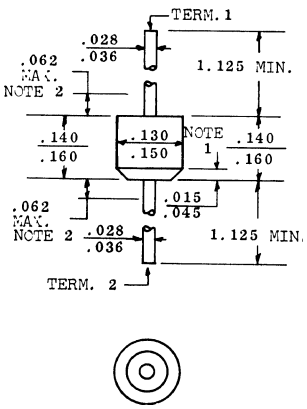

NOTES:
1. This end for visual orientation only (contour optional).
2. Lead diameter not controlled in this zone to allow for body flash and lead finish build-up.

DO41

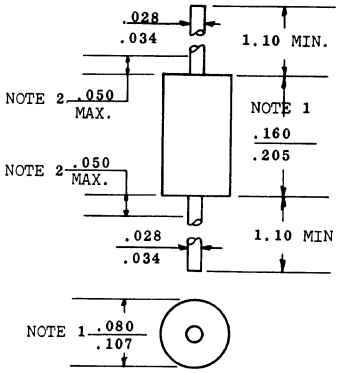

NOTES:
1. Package contour optional within cylinder of diameter .080/.107 and length .160/.205. Slugs if any, shall be included within this cylinder but shall not be subject to the minimum limit of .080/.107
2. Lead diameter not controlled in this zone to allow for flash, lead finish build up, and minor irregularities other than slugs.

E200/DO200

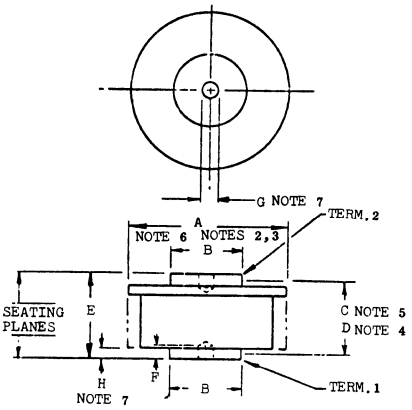

NOTES:
1. Refer to rules for dimensioning semiconductor product outlines included in Publication No. 76.
2. Package contour optional between Term. 1 and 2.
3. A step or other identifying feature shall be provided near Term. 2.
4. Minimum electrical creepage length between Term. 1 and 2.
5. Minimum electrical strike distance between Term. 1 and 2.
6. Surfaces flat within .0015 per inch.
7. Typical two places.

	A	B	C	D	E	F	G	H
E200a/	1.42	.730	.300	.250	.490	.050	.123	.010
DO200AA	1.70	1.16	MIN	MIN	.600	MIN	.145	MIN
E200b/	2.20	1.03	1.00	.750	1.00	.050	.123	.030
DO200AB	2.25	1.50	MIN	MIN	1.06	.160	.145	.110

E202/DO202

	REF.	A	B	C	D	E	F	G
E202a/	DO12	.026	.213	.026	.350	.600	1.00	.188
DO202MA		.035	.265	.125	MAX	MAX	1.62	MAX

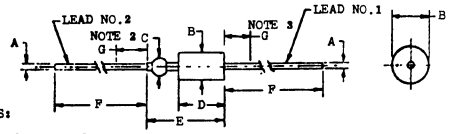

NOTES:
1. Refer to rules for dimensioning semiconductor product outlines included in Publication No. 76.
2. Pinch or seal deformation optional within zone defined by C and E-D.
3. Lead diameter not controlled in zones G to allow for flash, lead finish build-up and minor irregularities.

E203/DO203

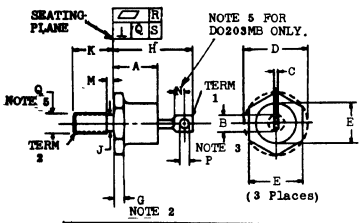

NOTES:
1. Refer to rules for dimensioning semiconductor product outlines included in Publication No. 76.
2. Chamfer or undercut on one or both ends of hexagonal base is optional.
3. Angular orientation and contour of terminal one is optional.
4. Q is pitch diameter of coated threads. Ref: Screw Thread Standards for Federal Services, Handbook H28 Part I.
5. Min. flat.

	REF	A	B	C	D	E	F	G	H	J	K	M	N	P	Q	R	S
E203a/	DO4	.450	.250	.020	.505	.265	.423	.075	.600	.163	.422	.078		.060	10-32	.002	.006
DO203MA		MAX	MAX	.065	MAX	.424	.438	.175	.800	.189	.453	MAX		.095	UNF-2A	MAX	MAX
E203b/	DO5	.450	.375	.030	.794	.667	.669	.115	.750	.220	.422	.090	.156	.140	1/4-28	.002	.006
DO203MB		MAX	MAX	.080	MAX	MAX	.688	.200	1.00	.249	.453	MAX	MIN	.175	UNF-2A	MAX	MAX

E204/DO204

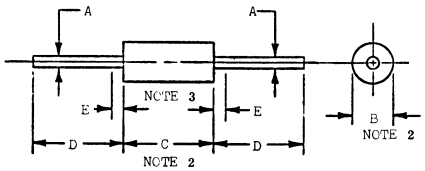

NOTES:
1. Refer to rules for dimensioning semiconductor product outlines included in Publication No. 76.
2. Package contour optional within B and Length C. Heat slugs, if any, shall be included within this cylinder but shall not be subject to the minimum limit of B.
3. Lead diameter not controlled in zones D to allow for flash, lead finish build-up and minor irregularities other than heat slugs.

	REF.	A	B	C	D	E
E204a/	DO7	.018	.078	.195	1.00	.050
DO204MA		.022	.107	.300	1.50	MAX
E204b/	DO14	.018	.092	.230	1.00	.050
DO204MB		.022	.130	.300	1.50	MAX
E204c/	DO34	.018	.050	.080	1.00	.050
DO204MC		.022	.075	.120	1.50	MAX
E204d/	DO35	.018	.050	.140	1.00	.050
DO204MD		.022	.075	.180	1.50	MAX

E205/DO205

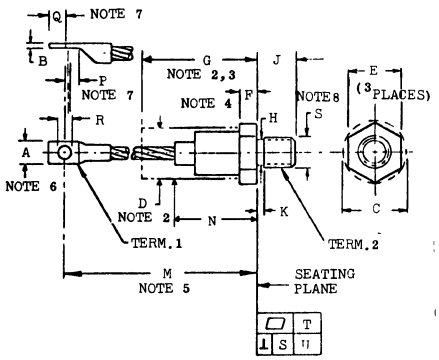

NOTES:
1. Refer to rules for dimensioning semiconductor product outlines included in Publication No. 76.
2. The body of the device with the exception of the hexagon and flexible lead extensions lies within cylinder defined by D and G, D not to exceed actual E.
3. G is seated height with the lead bent at right angle.
4. Chamfer or undercut on one or both ends of hexagonal base is optional.
5. Flexible lead.
6. Contour and orientation of terminal lug are optional. Square or radius on end of terminal is optional.
7. Min. flat.
8. S is pitch diameter of coated threads. Ref: Screw Thread Standards for Federal Services, Handbook H28 Part I.

	REF	A	B	C	D	E	F	G	H	J	K	M	N	P	Q	R	S	T	U
E205a/	DO8	.437	.050	1.22	1.06	1.03	.125	2.50	.344	.605	.105	3.87	1.67	.300	.270	.250	3/8-24	.003	.006
DO205MA		.650	.100	MAX	MAX	1.06	.500	MAX	.373	.645	MAX	4.62	MAX	MIN	MIN	.310	UNF-2A	MAX	MAX
E205b/	DO9	.530	.063	1.44	1.21	1.21	.250	3.25	.660	.793	.156	5.00	2.25	.375	.300	.265	3/4-16	.003	.006
DO205MB		.755	.172	MAX	MAX	1.25	.500	MAX	.749	.828	MAX	6.00	MAX	MIN	MIN	.350	UNF-2A	MAX	MAX

F3

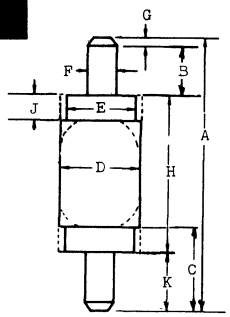

NOTE: DIM. E MAY EXTEND AS FAR AS DIM. D ON SOME DEVICES.

	A	B	C	D	E	F	G	H	J	K	CHAMFERED EDGES
F3a	.766 .792	.180 .190	.285 .325	.240 MAX	.210	.092 .096				.180 .190	YES
F3b	.868 MAX	.181 .189		.240 MAX	.215 .223	.093	.028 MAX	.466 .490	.086 .092	.181 .189	NO
F3d	.220 .230	.035 MIN		.105 MAX		.045 .047	NA				YES
F3e	.275 .285	.062 MIN		.105 MAX		.045 .047	NA				YES
F3f	.703 MAX	.185 MAX		.219 MAX			NA	.323 MAX			NO
F3h	.687 MAX	.185 MAX			.205		NA	.412 MAX			NO
F3j	.790 MAX	.188 MAX		.240 MAX	.216		NA	.411 MAX			NO
F3m	.687	.180 MIN		.240		.094	.150			.080	NO
F3n	.208	.064		.083		.064	.022			.064	NO
F3p	.807	.188		.216		.093				.093	NO
F3q		.185 MAX		.219 MAX			NA	.412 MAX			NO

F8

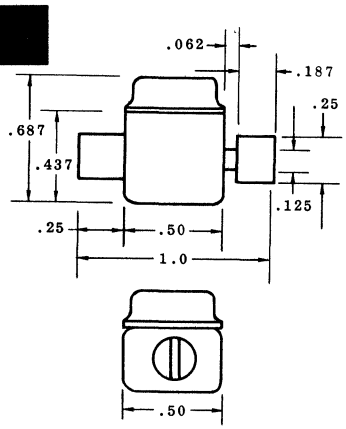

F9

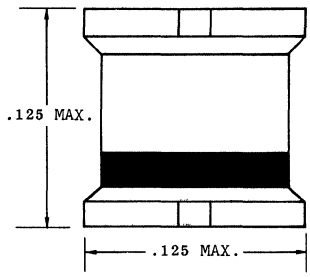

F9a

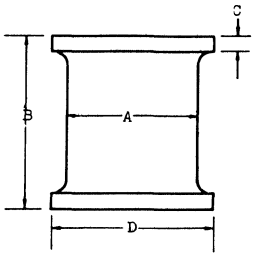

	A	B	C	D
F9a	.105 MAX	.120 .130	.030	.120 .130
F9b		.250 MAX		.400 MAX

F10

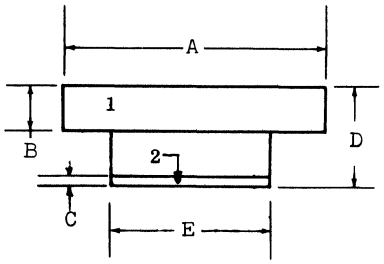

	A	B	C	D	E	1	2
F10a	.115 .131	.025 MAX	.005 .015	.035 .055	.080 .100	C	A
F10b	.117 .123	.020 MAX		.044 .056	.077 .083	A	C
F10c	.117 .123	.020 MAX		.044 .056	.077 .083	C	A
F10e	.118 .122	.025 MAX		.055	.075 .095	C	A
F10f	.048 .052	.017 .023	.029 .031	.045 .055	.024 .026	C	A
F10g	.066 .072	.012 MAX		.025 .031	.047 .053	C	A
F10h	.119 .125	.020 MAX		.055 .061	.079 .085	C	A
F10j	.119 .125	.020 MAX		.055 .061	.079 .085	A	C
F10k	.119 .125	.020 MAX		.055 .061	.077 .083	A	C
F10m	.117 .123	.025 MAX		.063 .068	.082 .088	C	A
F10n	.081 .085	.0075	.0365		.065 MAX		
F10p	.080	.012		.034	.050		
F10q	.123	.020		.058	.080		
F10r	.120	.013		.050	.080		
F10s	.050			.023	.030		
F10t	.162	.020		.055	.132		
F10u	.125	.009		.050	.090		
F10v	.125	.025		.060	.080		
F10w	.086	.012		.044	.054	C	A
F10x	.230	.025		.145	.162		
F10z	.081	.013		.030	.050	A	C
F10aa	.080			.030	.050	C	A
F10ab	.120			.058	.080	C	A
F10ac	.078 .082	.010 .016		.034 .044	.051 .055	C	A
F10ad	.117 .123	.025 MAX		.082 .102	.075 .085	A	C

F11

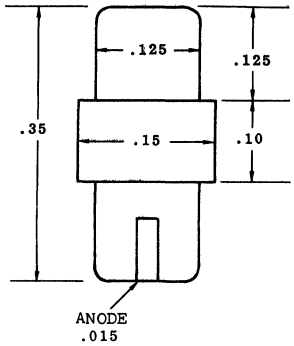

F12

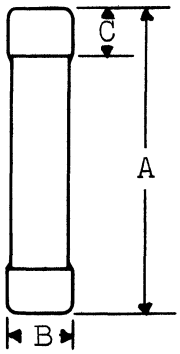

	A	B	C
F12	1.75	.500 MIN	.377
F12a	2.25	.500 MIN	.377
F12b	2.75	.500 MIN	.377
F12c	3.85	.500 MIN	.377
F12d	2.20	.850	.377
F12e	3.20	.850	.377
F12f	3.70	.850	.377
F12g	4.20	.850	.377
F12h	5.20	.850	.377
F12j	7.00	.850	.377
F12k	8.00	.850	.377
F12m	9.25	.850	.377
F12n	10.25	.850	.377
F12p	4.37	.591	.591
F12r	1.813	.547	.563
F12s	2.50	.547	.563
F12t	4.313	.547	.563
F12u	6.063	.547	.563
F12v	2.00	.562	.500
F12w	2.50	.562	.500
F12x	3.00	.562	.500
F12y	3.50	.562	.500
F12z	4.00	.562	.500
F12aa	4.50	.562	.500
F12ab	5.00	.562	.500
F12ac	5.50	.562	.500
F12ad	6.00	.562	.500

F13

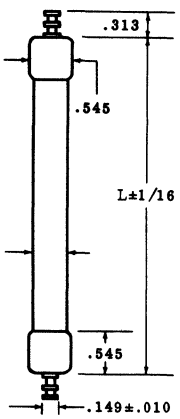

F13	L
a	1.813
b	2.50
c	4.313
d	6.063

F16

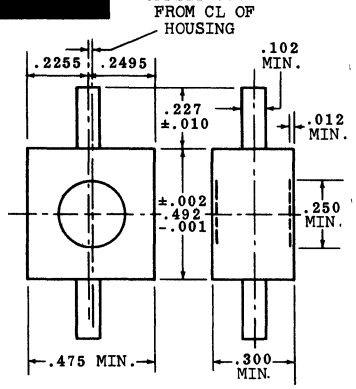

F19

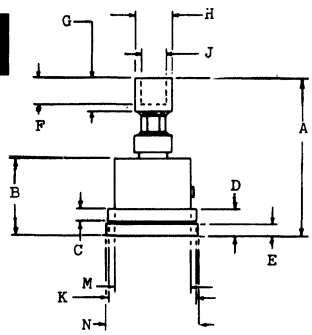

	A	B	C	D	E	F	G	H	J	K	M	N
F19	1.844	1.094		.425 MAX		NA		.437 .439	NA	NA	1.297	1.625
F19a	1.3437	1.094		.406		NA		.437 .439	NA	NA	1.297	1.625
F19b	1.75 1.80	.890 MAX	.140 .150	.258 .295	.113 .133	.305 MAX	.375 MAX	.435 .438	.280 MAX	1.003 1.04	.875 MAX	1.04 1.05

F21

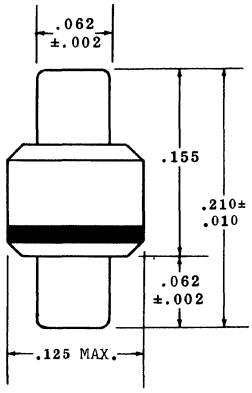

F22

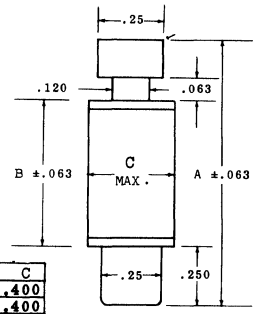

	A	B	C
F22	1.00	.50	.400
F22a	1.469	.969	.400
F22b	1.938	1.438	.400
F22c	2.406	1.906	.400
F22d	2.875	2.375	.400
F22e	3.344	2.844	.400
F22f	3.813	3.313	.400
F22h	1.125	.500	.450

F27

	A	B	C	D	E	F	G	1	2
F27	.175	.050	.062	.025	.123	.060 .064	.077 .083	C	A
F27a	.184	.058	.062	.020	.123	.060 .064	.077 .083	C	A
F27d	.212	.088	.062	.020	.123	.060 .064	.077 .083	C	A
F27e	.215		.064		.123	.060 .064	.077 .083	C	A
F27f	.215	.091	.062	.025	.123	.060 .064	.077 .083	C	A
F27g	.215	.091	.062	.025	.123	.060 .064	.077 .083	A	C
F27h	.215	.091	.062	.025	.123	.060 .064	.077 .083		
F27j	.180	.056	.062	.020	.123	.060 .064	.077 .083		
F27k	.171	.050	.064	.025	.123	.060 .064	.077 .083		
F27m	.062	.091	.062		.123	.060 .064	.077 .083		
F27n	.225		.066		.123	.060 .064	.077 .083	C	A
F27p	.197	.088	.062	.020	.123	.060 .064	.077 .083	C	A
F27q	.220	.094	.066	.015	.123	.060 .064	.077 .083		
F27r	.225	.097	.064	.025		.060 .064	.077 .083		
F27t	.186	.062	.062	.025	.120	.060 .064	.077 .083	C	A
F27u	.061	.088	.061 .063	.025	.118 .120	.060 .064	.077 .083		
F27v	.062	.084	.062	.017		.060 .064	.077 .083	C	A
F27w	.062	.081	.062	.025		.060 .064	.077 .083	C	A
F27x	.205 .225	.070 .076	.060 .066		.117 .120	.060 .064	.077 .083	C	A
F27ab	.208		.062	.084	.120	.062	.080	C	A
F27ac	.215		.062	.067	.121	.062	.080	C	A
F27ad	.215		.063		.125	.063	.090	C	A
F27ae	.189		.063	.063	.130	.063		C	A
A27af	.202 .224	.082 .094	.060 .064	.025 MAX	.118 .123	.060 .064	.082 .094		
F27ag	.206 .218	.082 .086	.060 .064	.019	.116 .124	.062	.078 .082	C	A
F27ah	.202 .224	.082 .094	.060 .064	.025 MAX	.118 .123	.062 .064	.078 .082	C	A
F27aJ	.208	.083 .093	.060 .064	.025 MAX	.122	.060	.077 .083		
F27ak	.150	.086	.060 .062	.020	.118	.062	.080	A	C
F27am	.205 .225		.060 .064	.025 MAX	.117 .123	.060 .064	.075 .085	C	A
F27an	.205 .210	.145 .161	.060 .064	.025 MAX	.117 .125	.060 .064	.077 .083	C	A

F29

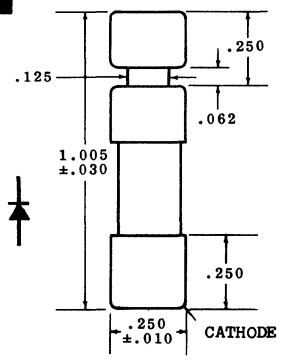

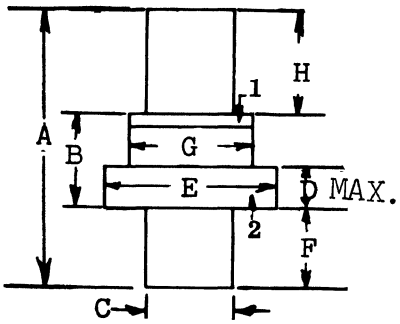

F32

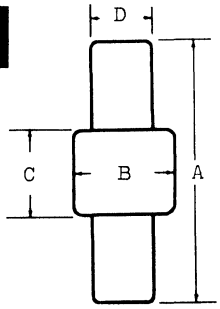

	A	B	C	D
F32b	.500	.126	.177	.094
F32c	.090	.145	.050	.090
F32d	.130	.085	.085	.045
F32e	.130	.070	.080	.030
F32f	.202	.084	.076	.062

F34

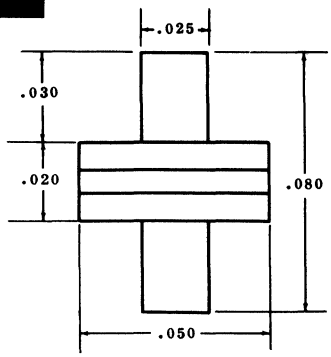

F36

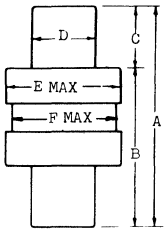

	A	B	C	D	E	F
F36b	.282	.231	.056	.069	.101	.099

F39

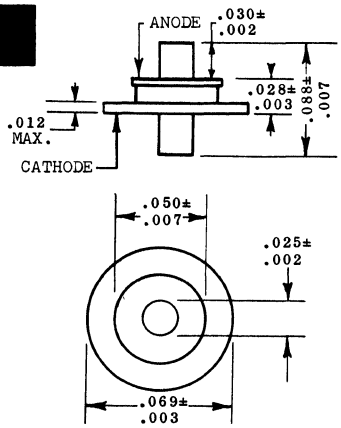

F42

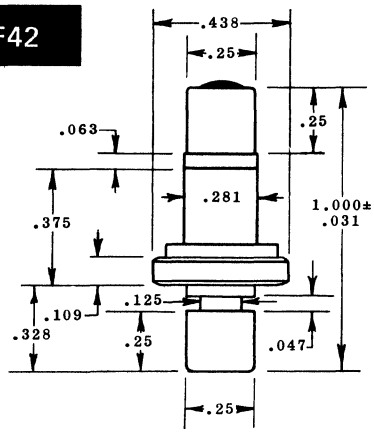

F43

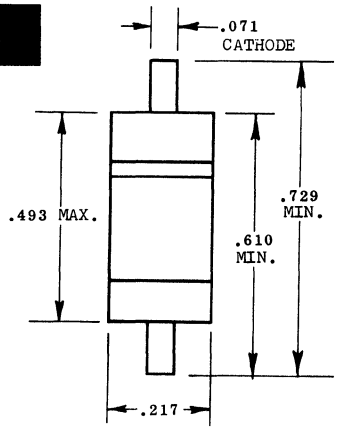

15. OUTLINE DRAWINGS

IN DRAWING NUMBER SEQUENCE

F48

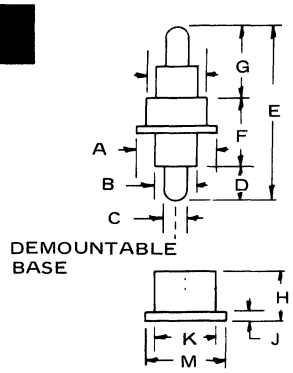

	A	B	C	D	E	F	G	H	J	K	M
F48a	.230	.160	.100	.185	.784		.335	NA	NA	NA	NA
F48b	.235	.160	.100	.185	.775		.310	NA	NA	NA	NA
F48c	.240	.170	.046	.190	.792	.412	.370	.250	.057	.250	.296
F48d	.235	.166	.094	.187	.816	.429	.185	.199	.057	.250	.296
F48e	.240	.150	.092	.180	.800		.370	.250	.047	.246	.292
		.170	.094	.190	.840		MAX		.057	.250	.296

F49

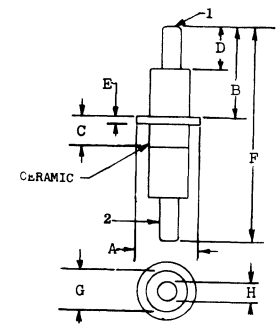

	A	B	C	D	E	F	G	H	1	2
F49	.230	.335	.105	.185	.025	.779	.160	.092 .094	A	C
F49a	.240	.335		.185	.025	.779	.160	.092 .094	A	C
F49b	.234			.165		.750 .790	.166	.088 .096		C
F49c	.234			.185		.750 .790	.166	.088 .096		A
F49d	.234			.185		.750 .790	.181	.088 .096		C
F49e	.240			.185		.750 .790	.210	.088 .096		
F49f	.240 MAX		.120 .180	.160 .190	.030 MAX	.766 .792	.150 .170	.092 .094	C	A

F51

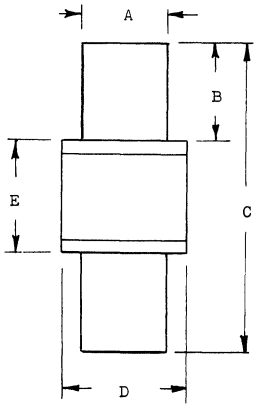

	A	B	C	D	E
F51	.060 .064	.060 .064	.190 .210	.080	.072 .080
F51a	.060 .064	.060 .064	.190 .210	.103	.072 .080
F51b	.250	.250	1.06	.380 MAX	.510 MAX

F54

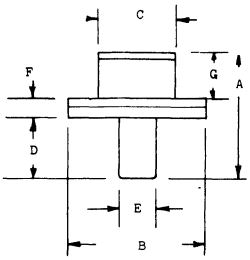

	A	B	C	D	E	F	G	1	2
F54	.065	.081	.051	.031	.026				
F54a	.138	.120	.080	.062	.062	.018	.058		
F54b	.063	.094	.051	.035	.025	.016	.020		
F54c	.054 .066	.079 .083	.048 .052	.028 .032	.024 .026	.013 MAX	.021 MAX		
F54d	.054	.080	.050	.025	.050	.012	.017		
F54e	.056	.080	.050		.040			C	

F56

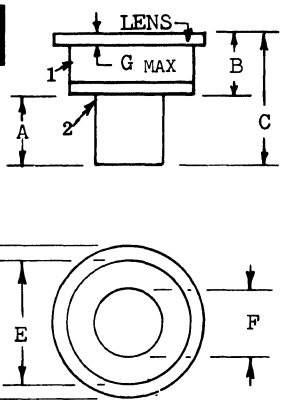

	A	B	C	D	E	F	G	1	2	WINDOW
F56	.030	.025	.055	.060	.050	.025				NA
F56a	.030	.045	.075	.060	.050	.025				NA
F56b	.062	.085	.122	.122	.080	.062	.025 MAX			NA
F56c	.030	.045	.075	.084	.050	.025	.015 MAX			NA
F56d	.022 .029	.021 .034	.045 .062	.068 .070	.046 .053	.023 .026	.011 MAX			NA
F56e		.117	.157	.122	.077 .083	.059 .065	.024	A	C	YES
F56f		.056	.118	.121	.077 .083	.059 .065	.020			
F56g		.084 .114	.145 .155	.119 .125	.077 .083	.059 .065	.022 MAX		C	
F56h		.058	.113 .127	.119 .125	.077 .083	.059 .065	.018		C	
F56j		.014 .071	.114 .135	.118 .123	.077 .083	.059 .065	.014 .023		C	
F56k	.180 .190	.165 MIN	.345 .375	.240 MAX	.205 .215	.092 .096	.015 .025			NA
F56m	.531	1.000 1.031	1.531 1.562	1.235 1.265	1.00	.343 .348	.219			NA
F56n	.059 .065	.070 .076	.149 .161	.117 .130	.077 .087	.060 .066	.020	C		NA
F56p	.060 .064	.054 .071	.114 .135	.117 .123	.078 .082	.060 .064		A	C	NA
F56q	.060	.083 .093	.148	.122	.077 .083	.060 .064	.025 MAX			NA
F56r	.060 .064	.059 .065	.119 .129	.117 .123	.075 .085	.060 .064	.025 MAX	A	C	NA
F56s	.060 .064	.088 .094	.148 .158	.117 .123	.075 .085	.060 .064	.025 MAX	A	C	NA

F57

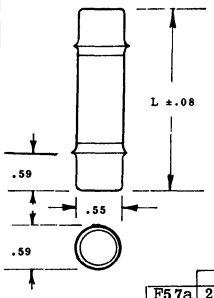

	L
F57a	2.60
F57b	1.90
F57c	4.50
F57d	6.10
F57e	2.50
F57f	1.81
F57g	4.31
F57h	6.06

F58

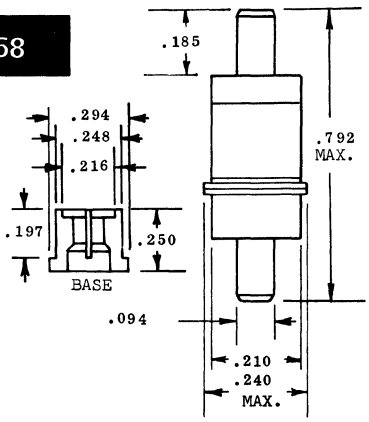

F58a has demountable base

F63

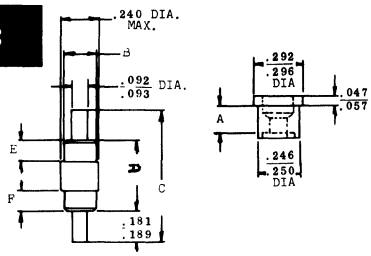

	A	B	C	D	E	F	REMARKS
F63	.157 .166	.208 .212	.776 .790	.406 .420	.118 .122	.118 .122	DETACHABLE BASE
F63a	.157 .166	.208 .212	.776 .790	.406 .420	.118 .122	.118 .122	NONE
F63b		.195 .225	.766 .792		.030	.030	DETACHABLE BASE
F63c		.195 .225	.800 .840		.030	.030	DETACHABLE BASE
F63d		.195 .225	.800 .840		.030	.030	WITH BASE ONLY

F64

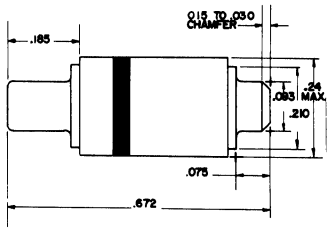

F65

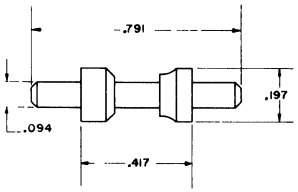

F69

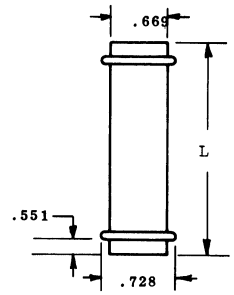

	L
F69	3.14
F69a	3.93
F69b	6.10
F69c	8.07

F70

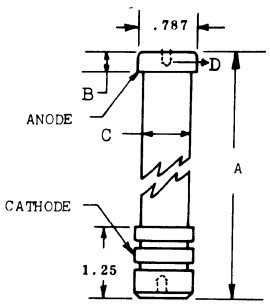

	A	B	C	D
F70	5.59	.314	.767	
F70a	6.69	.314	.767	
F70b	9.05	.314	.767	
F70c	5.10	.580 / .660	.690	10-32 .23 DEEP
F70d	6.40	.580 / .660	.690	10-32 .23 DEEP
F70e	8.12	.580 / .660	.690	10-32 .23 DEEP
F70f	9.25	.580 / .660	.690	10-32 .23 DEEP
F70g	10.2	.580 / .660	.690	10-32 .23 DEEP
F70h	12	.580 / .660	.690	10-32 .23 DEEP
F70j	13.3	.580 / .660	.690	10-32 .23 DEEP

F73

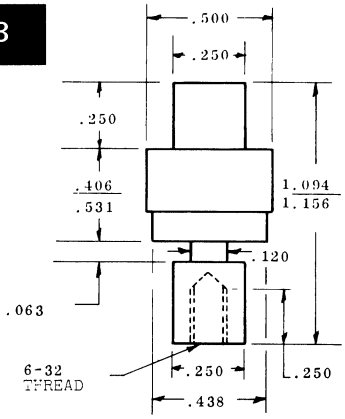

F74

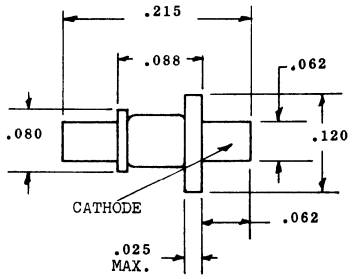

F76

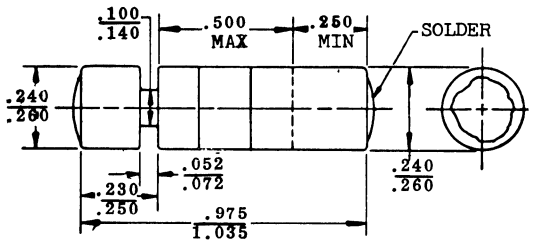

F77

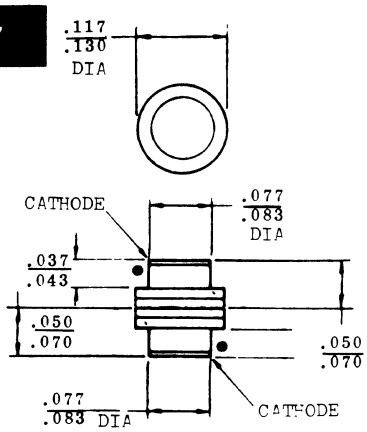

F78

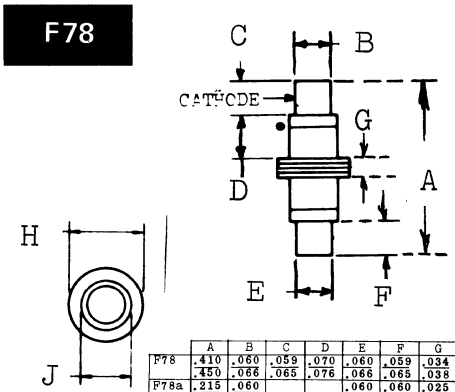

	A	B	C	D	E	F	G	H	J
F78	.410 / .450	.060 / .066	.059 / .065	.070 / .076	.060 / .066	.059 / .065	.034 / .038	.117 / .130	.077 / .087
F78a	.215 / .235	.060 / .064			.060 / .064	.060 / .064	.025 MAX	.120 / .117	.077 / .083

F79

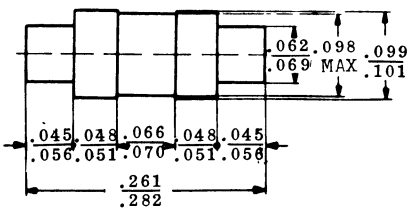

15. OUTLINE DRAWINGS

IN DRAWING NUMBER SEQUENCE

F80

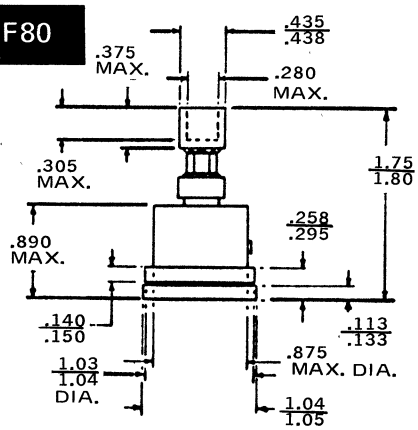

F81

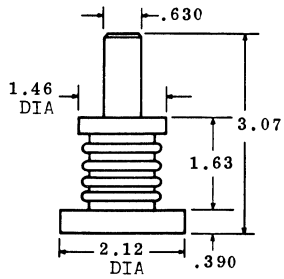

F82

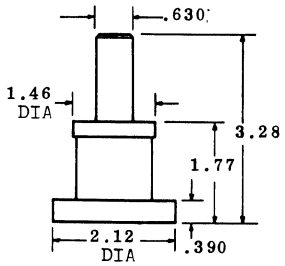

F83

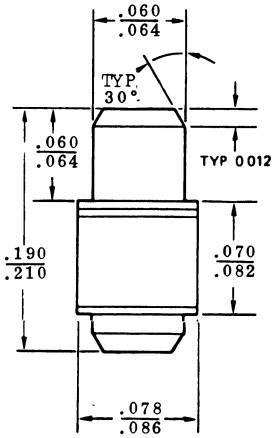

F85

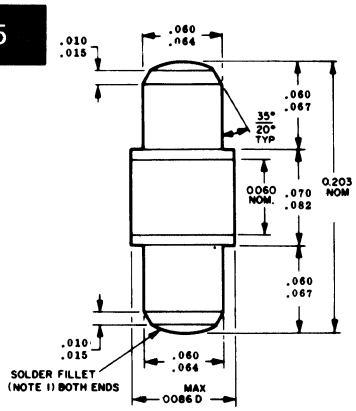

L1

	LEAD 1	LEAD 2	LEAD 3	LEAD 4	OUTLINE
L1a	A1	A2	A3	K	TO46
L1b	K1	K2	K3	A	TO46
L1c	A2&K1	K2	CASE	A1	TO72

L4

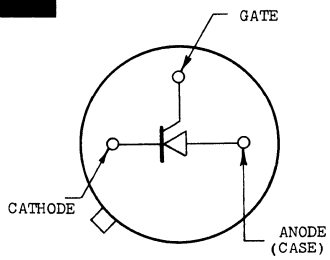

SAME AS TO18

L5

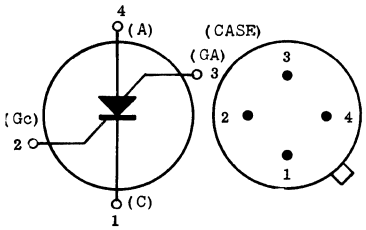

SAME AS TO72 OUTLINE

L6

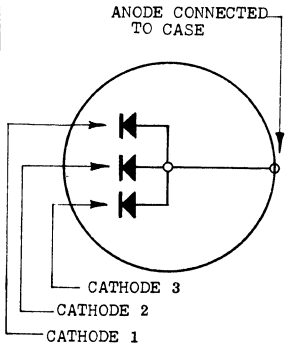

TO5 OUTLINE EXCEPT FOR LEAD ARRANGEMENT

L8

	LEAD 1	LEAD 2	LEAD 3	OUTLINE
L8	A1	K1,2	A2	TO92
L8a	A1	K1,2	A2	TO98
L8b	K	A	NO CONN.	TO1
L8c	A1	A2	K	TO46
L8d	K1	K2	A	TO46
L8e	A1	G	A2	TO98
L8f	A1	A22	G,CASE	TO18
L8g	K1	K2	A	TO92

L11

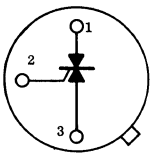

	1	2	33	OUTLINE
L11	A2	G	A1	TO5

L12

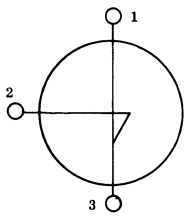

	1	2	3	OUTLINE
L12	A	G	G CASE	TO18
L12a	A	G	C	TO98

15. OUTLINE DRAWINGS

IN DRAWING NUMBER SEQUENCE

M4

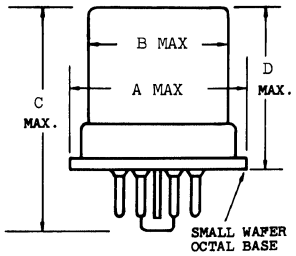

	A	B	C	D
M4	1.31	1.00	1.75	1.13
M4a	1.38		1.81	1.25
M4b	1.25	1.03	1.75	1.19

M9a

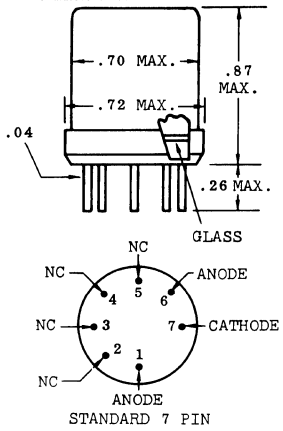

M12

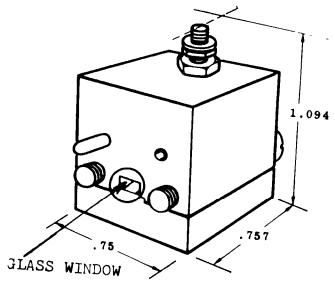

M13

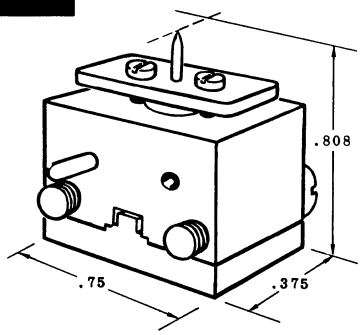

M15

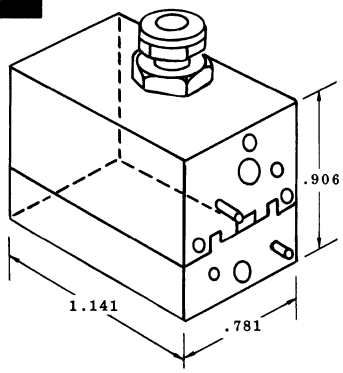

M17

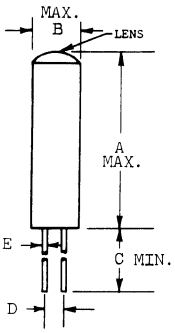

	A	B	C	D	E
M17	.750	.193	.940	.047	.017
M17a	.748	.079	1.50	.024	.010
M17b	.600	.085	1.50		
M17c	.687	.171	1.125		
M17d	.437	.092	1.187		
M17e	.342 .366	.102 .110	1.10 MIN	.023	.014 MAX
M17f	.326 .362	.078 .086	.905 MIN	.025	.014 MAX

M18

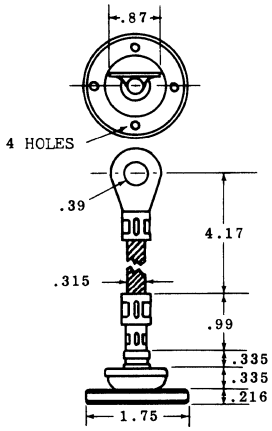

M19

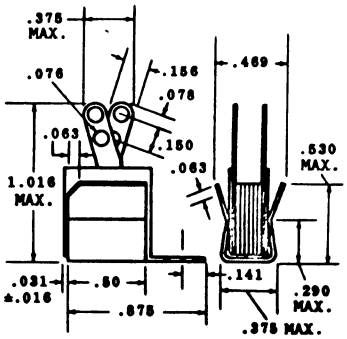

M21

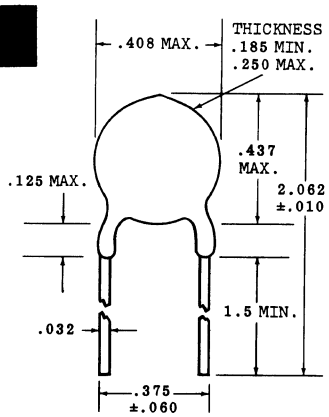

M22

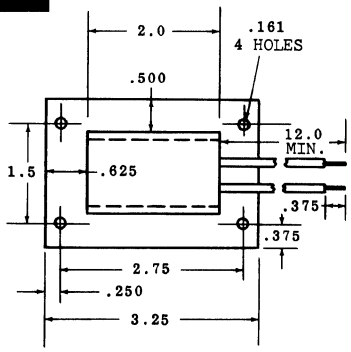

M26

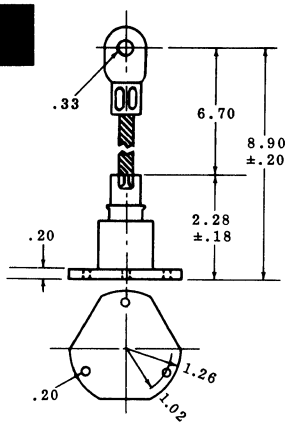

M27

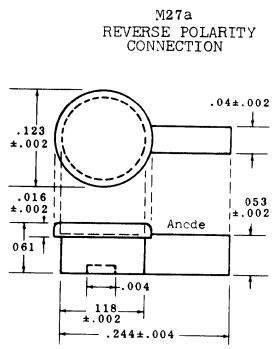

M38

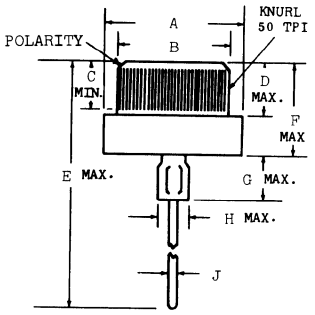

	A	B	C	D	E	F	G	H	J	POLARITY
M38	.625	.502	.188	.250	.938	.344			.050	ANODE
	.631	.504	MIN							
M38a	.615	.502	.225	.250	1.64	.420	.230	.140	.047	ANODE
	.625	.506	MIN						.053	
M38b	.615	.501	.140	.375	1.63	.375			.081	ANODE
	.625	.505	.150							
M38aa	.615	.502	.225	.250	1.64	.420	.230	.140	.047	CATHODE
	.625	.506							.053	
M38ab	.610	.501	.180	.200	.674	.080	.234	.140		
	.640	.505	.250	.250		.190				

M40

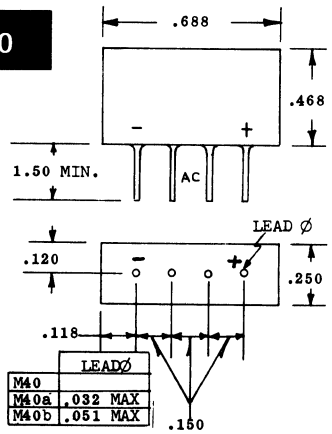

	LEADØ
M40	
M40a	.032 MAX
M40b	.051 MAX

M41

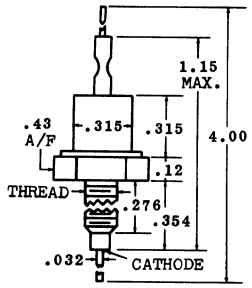

	THREAD
M41	M4
M41a	M5

M42

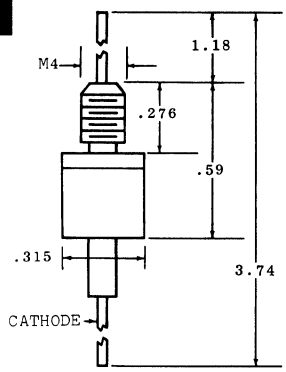

M43

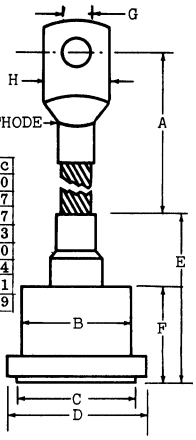

	M43	M43a	M43b	M43c
A	5.91	5.75	5.91	7.00
B	1.75	1.50	1.50	1.77
C	1.58	1.94	1.57	1.97
D	1.76	2.12	1.73	2.13
E	2.36	2.76	2.25	2.50
F	1.26	1.50	1.14	1.24
G	.46	.51	.41	.51
H	.71	1.00		.99

M45

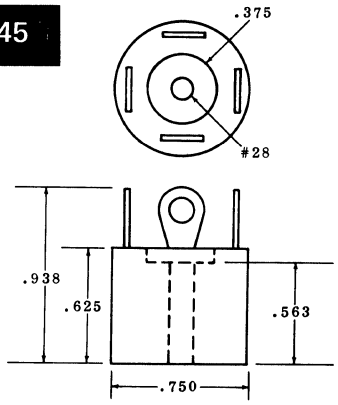

M45a

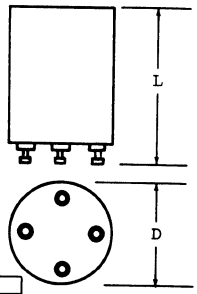

	D	L
M45a	.875	.250
M45b	1.125	1.25
M45c	1.125	.250
M45d	2.00	3.00
M45e	2.00	.375

M50

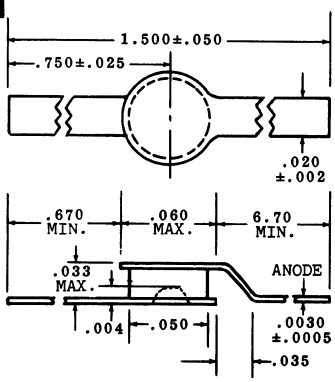

M51

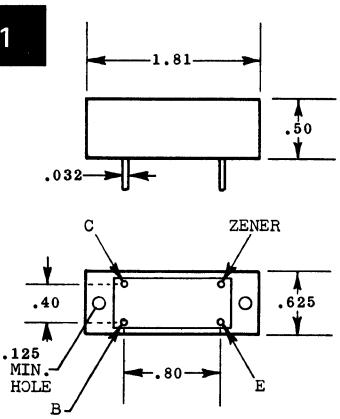

M54

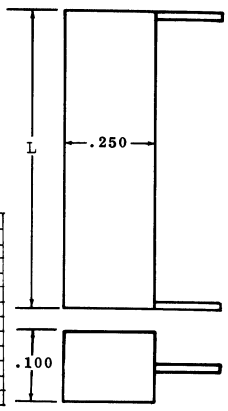

	L
M54a	.250
M54b	.350
M54c	.450
M54d	.550
M54e	.650
M54f	.750
M54g	.850
M54h	1.05
M54j	1.25
M54k	1.45
M54l	1.65
M54m	.950

15. OUTLINE DRAWINGS

IN DRAWING NUMBER SEQUENCE

M55

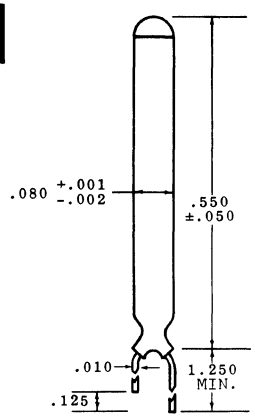

M56

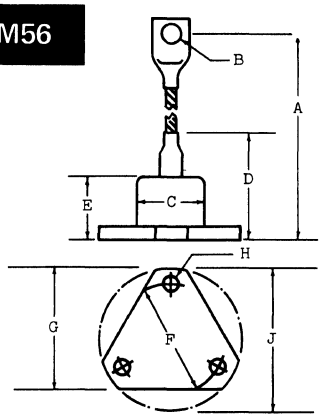

	A	B	C	D	E	F	G	H	J
M56	3.250	.203	.688	1.188	.656	1.250	1.344	.171	1.625
M56a	3.625	.266	1.250	1.656	.875	1.877	1.970	.203	2.250
M56b	5.250	.531	1.750	1.250	2.188	2.375	2.438	.203	2.750
M56c	3.625	.250 SCREW	1.250		.8594	1.875		.203	2.250
M56d	3.250	#10 SCREW	.6875		.625	1.250		.171	1.625
M56f	5.250	.500 BOLT	1.750		1.250	2.375		.203	2.750

M58

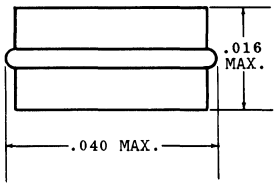

M62

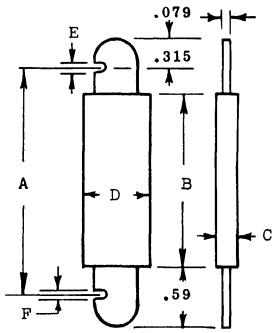

	A	B	C	D	E	F
M62	7.87	6.70	.472	1.00	.323	.244
M62a	7.87	6.70	.472	1.00	.323	.244
M62b	9.50	8.27	.630	1.00	.323	.244
M62c	7.87	6.70	.710	1.00	.354	.256
M62d	9.50	8.27	.710	1.00	.354	.256
M62e	9.50	8.27	.790	1.42	.354	.256
M62f	9.50	6.70	.472	1.00	.323	.244
M62g	7.87	6.69	.709	.984	354	276
M62h	9.45	8.27	.709	.984	354	276

M65

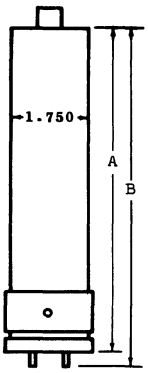

	A	B
M65	7.313	7.625
M65a	7.313	8.063
M65b	9.563	9.875

M66

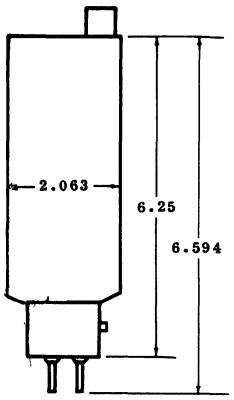

M70

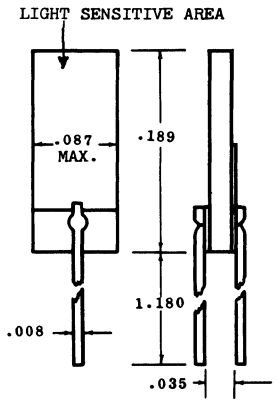

M71

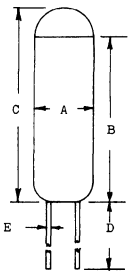

	A	B	C	D	E
M71	.172	.688		1.125	
M71a	.082		.450 ±.05	1.30 MIN.	.01± .001
M71b	.082		.60 MAX.	1.50 MIN.	.01± .001
M71c	.340		.380	3.0	
M71d	.440		.380	3.0	
M71e	.480		.380	3.0	
M71f	.074	.327	.374	1.18	.01
M71g	.082		.450 ±.05	1.50 MIN.	.01± .001
M71h	.110		.374	1.18	
M71j	.193		.590		

M72

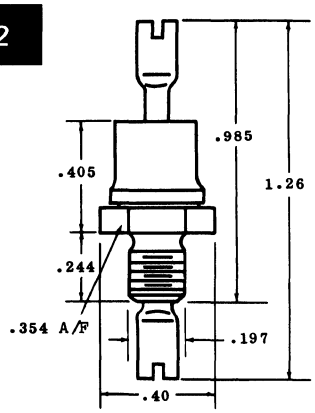

M73

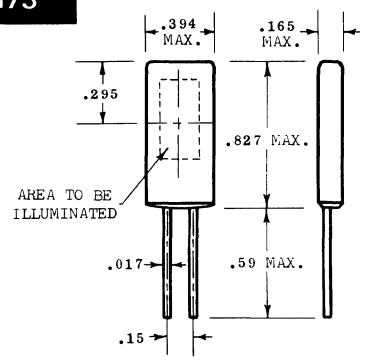

15. OUTLINE DRAWINGS

IN DRAWING NUMBER SEQUENCE

M74

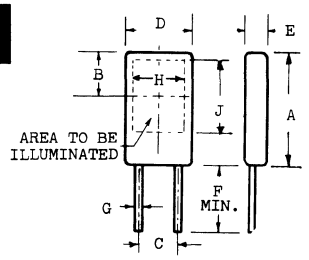

	A	B	C	D	E	F	G	H	J
M74	1.060	.394	.402	.630	.217	.590	.017		
M74a	1.730	.690	.402	.630	.217	.590	.017		
M74b	1.730	.690	.299	.630	.217	.590	.017		
M74c	1.583			.618	.185			.315	1.181
M74d	.433			.393	.059			.295	.393
M74e	.393			.393	.059			.295	.393

M76

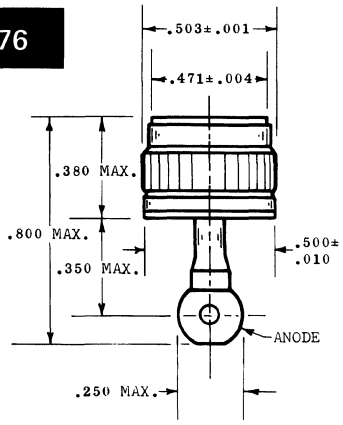

M77

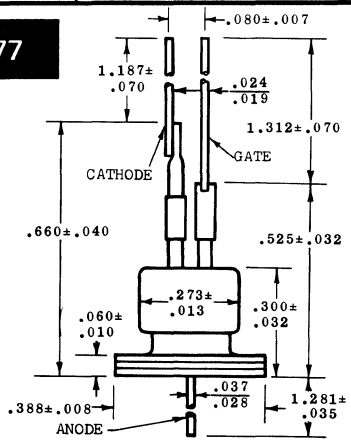

M78

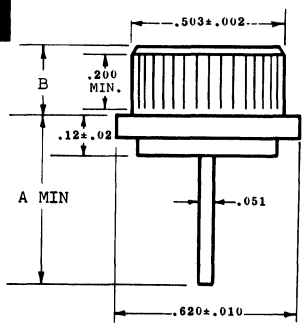

	A MIN	B
M78	1.19	.240
M78a	.884	.256

M79

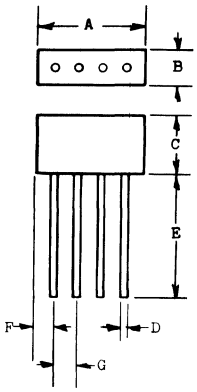

	A	B	C	D	E	F	G
M79	.900	.275	.500	.032 DIA	1.25		
M79a	.687 MAX	.260 MAX	.468 MAX	.032 .028 DIA	1.25	.114 NOM	.150 TYP
M79b	.687	.250	.468	.032 DIA	1.00 MIN		.150
M79c	.685	.240	.470	.049		.114	.155

M80

NOTE:
BENT LEAD
AVAILABLE ONLY
WHEN DIM.
H IS GIVEN.

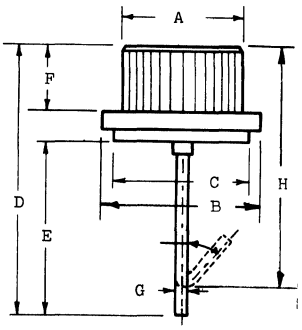

	A	B	C	D	E	F	G	H
M80	.503	.630	.551	1.21	.827	.275	.055	
M80a	.504	.626			1.38	.256	.051	1.26
M80b	.501 .505	.620 .630	.495 MAX	.800	.430	.250 MAX	.093	

M81

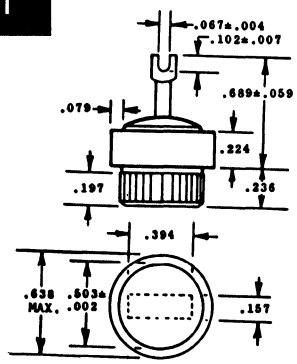

M82

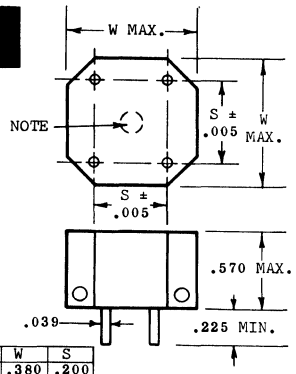

	W	S
M82	.380	.200
M82a	.690	.400
M82b	.815	.500
M82c	.940	.600

NOTE:
.140 HOLE OPTIONAL

M83

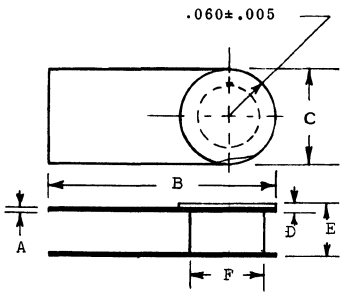

	A	B	C	D	E	F
M83	.003 .007	.230 .270	.115 .130	.010 .020	.055 .075	.085 .095
M83a	.004 .006	.230 .270	.115 .129	.010 .020	.055 .075	.085 .095
M83b	.004 .006	.235 .275	.060 .065	.010 .020	.035 .049	.086 .094

M84

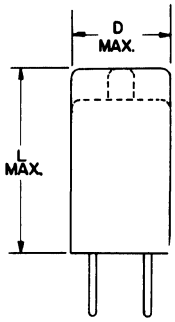

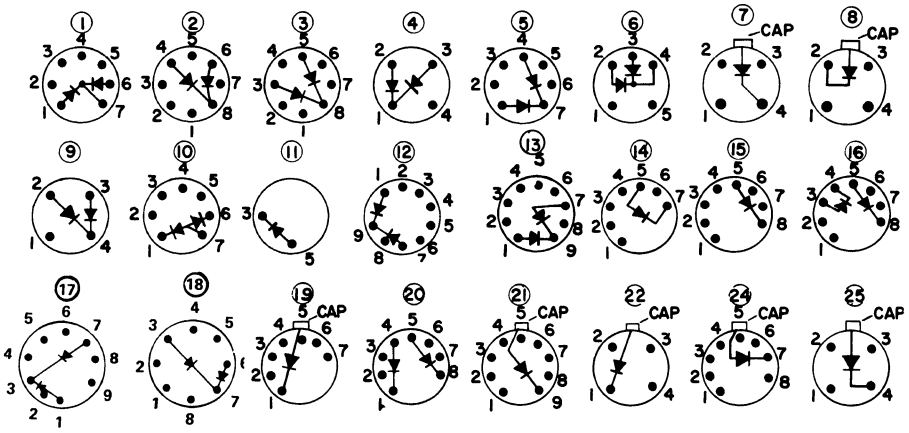

	D	L	BASE
M84	.870	1.75	1
M84a	1.25	2.65	2
M84b	1.25	2.65	3
M84c	1.25	2.65	4
M84d	.870	1.75	5
M84e	1.19	2.45	6
M84f	1.40	1.10	3
M84g	1.38	5.05	7
M84h	2.31	8.05	8
M84i	1.44	1.50	
M84j	2.31	8.18	8
M84k	1.25	2.65	9
M84m	.812	1.56	10
M84n	1.38	3.75	2
M84p	1.32	3.75	11
M84q	1.19	1.63	2
M84r		4.50	7
M84s	1.38	6.13	7
M84t	.750	1.63	1
M84u	1.25	2.06	2
M84v	.711	.593	2
M84w	2.00	.750	12
M84x	.840	2.00	13
M84y	1.20	4.20	7
M84z	2.40	7.90	7

	D	L	BASE	BASE TYPE
M84aa	.750	.750	10	OCTAL
M84ab	.750	.750	13	OCTAL
M84ac	.710	.855	14	7 Pin Min.
M84ad	1.38	1.12	15	OCTAL
M84ae	1.38	1.12	16	OCTAL
M84af	.710	.860	17	9 Pin Min.
M84ag	1.38	1.12	3	OCTAL
M84ah	.710	.860	12	9 Pin Min.
M84aj	1.38	1.12	18	OCTAL
M84ak	.820	1.95	19	7 Pin Min.
M84am	1.38	1.12	2	OCTAL
M84an	1.38	1.12	20	OCTAL
M84ap	.820	2.56	21	9 Pin Min.
M84aq	2.06	5.69	22	4 Pin Small
M84ar	3.00	7.00	22	4 Pin Medium
M84as	1.38	1.12	11	OCTAL
M84at	.820	2.56	8	9 Pin Min.
M84au	2.06	6.19	22	4 Pin Small
M84av	1.56	4.06	22	4 Pin Small
M84aw	2.06	5.53	7	4 Pin Jumbo
M84ax	2.31	8.18	8	4 Pin Jumbo
M84ay	2.31	7.38	8	5 Pin
M84az	2.88	10.7	8	4 Pin Jumbo
M84ba	1.32	3.75	24	OCTAL
M84bb	2.17	7.25	8	4 Pin

	D	L	BASE	BASE TYPE
M84bc	3.00	11.0	8	4 Pin Jumbo
M84bd	2.50	8.44	8	50W 4 Pin Jumbo
M84be	1.56	5.75	7	4 Pin Medium
M84bf	2.56	6.31	8	4 Pin Super Jumbo
M84bg	1.45	4.44	24	OCTAL
M84bh	2.06	6.25	22	4 Pin Medium
M84bj	2.06	6.25	8	4 Pin Medium
M84bk	2.13	6.75	8	4 Pin Super
M84bm	1.56	4.12	8	4 Pin Medium
M84bn	1.44	3.75	22	4 Pin Small
M84bp	1.56	4.12	22	4 Pin Medium
M84bq	2.98	9.13	8	4 Pin Super Jumbo
M84br	3.81	10.8	22	50W 4 Pin Jumbo
M84bs	2.50	8.88	25	50W 4 Pin Jumbo
M84bt	1.81	4.88	22	4 Pin Medium
M84bu	4.63	13.3	22	4 Pin
M84bv	2.31	7.38	22	4 Pin Medium
M84bw	2.06	5.53	7	4 Pin Small
M84bx	2.31	8.18	8	4 Pin Super Jumbo
M84by	2.88	10.6	8	4 Pin Super Jumbo

M85

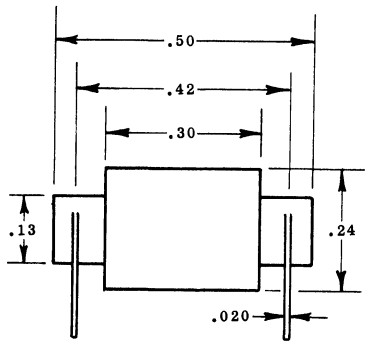

M86

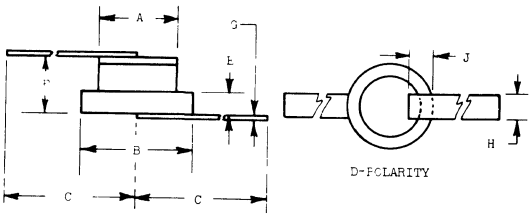

	A	B	C	D	E	F	G	H	J	K
M86	.075 .095	.119 .125	.500	ANODE	.020	.040 .060	.003	.050	.030	
M86a	.082 .086	.118 .122	.125	CATH.	.025	.060 .070	.003	.080	.060	
M86b	.081	.118	.125	ANODE	.025	.060			.060	
M86c		.120				.094	.005	.047		.750

M87

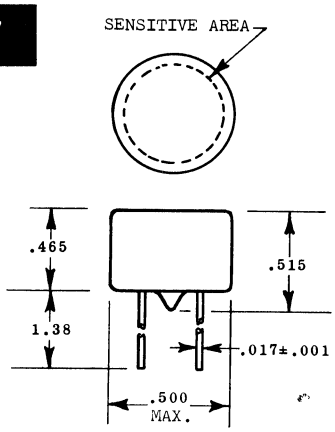

M88

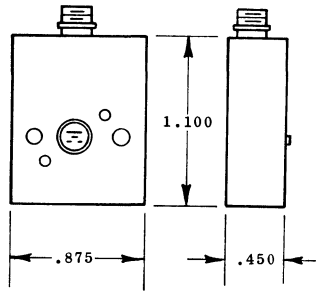

M91

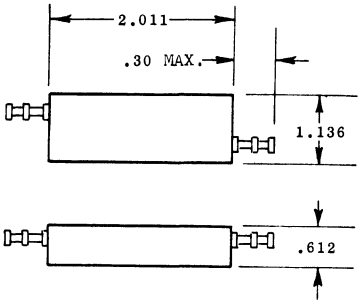

M92

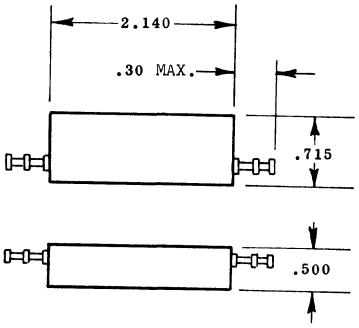

M93

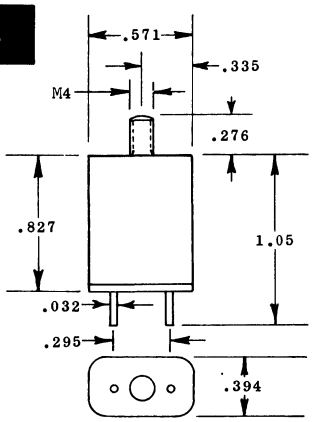

M94

	A	B	C	D	E	F	G	H	J	K	M	N	P	Q	R	S
M94	.800	.380	.350	.505	.471	.500	GATE	CATHODE								
M94a	.807	.362		.503	.472											
M94b	.765	.365		.503		.625	GATE	CATHODE								
M94c	1.05	.380		.505	.420	.510	GATE	MAIN TERM. 1								
M94d	.800 MAX	.330 .375		.501 .505	.467 .475	.501 .505	GATE	MAIN TERM. 1								
M94e	.728	.393		.500		.500	GATE	CATHODE								
M94f	.750 MAX	.380 MAX		.505 MAX	.465 .475	.501 .510	GATE	MAIN TERM. 1								
M94g	.763 MAX	.342 .390	.256 .296	.502 .508					.177 .210	.374 MAX	.315 MAX	.216 .256	.157 .197	.055 .071	.031 .047	1.34 1.74
M94h	.795 MAX	.340 .380		.501 .505		.501 .505		MAIN TERM. 1		.415 MAX	.305 MAX			.080 .095	.055 .065	.155

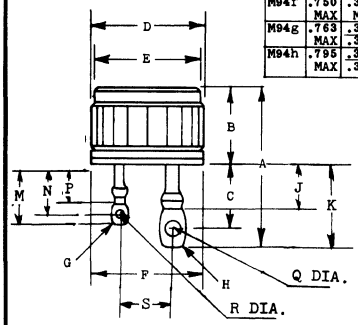

M98

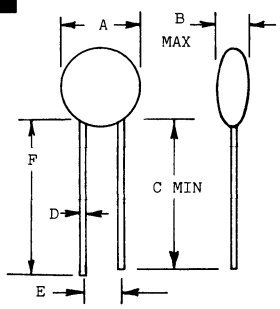

	A	B	C	D	E
M98	.512	.217	1.457	.024	.236
M98a	.394	.236	1.000	.027	

M99

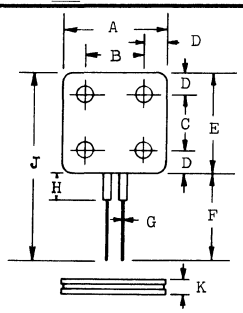

	A	B	C	D	E	F	G
M99	1.18	.787	.787	.197	1.18	.984	.024
M99a	1.18	.827	.827	.177	1.18	.984	.024

	H	J	K
M99	.394	2.17	.157
M99a	.394	2.16	.157

M100

M100	A	B	C
a	2.38	1.13	2.13
b	3.25	1.75	3.00
c	4.50	3.25	4.25
d	5.50	4.00	5.25

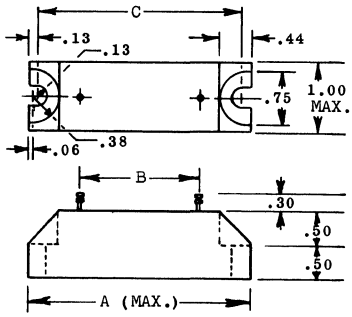

M101

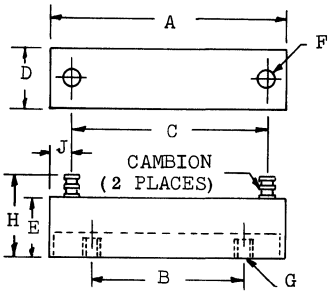

	A	B	C	D	E	F	G	H	J
M101	2.688	2.313	1.813	.563	.625	.169		1.10	Greater than .180
M101a	3.000	2.115	2.640	.750	.750		10-32X.125min	1.10	.180 TYP

M102

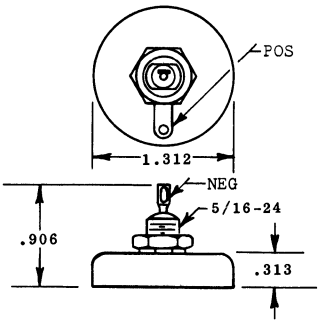

15. OUTLINE DRAWINGS

IN DRAWING NUMBER SEQUENCE

M103

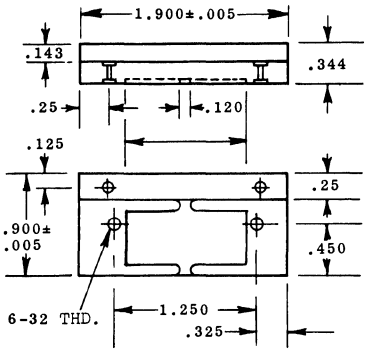

M104

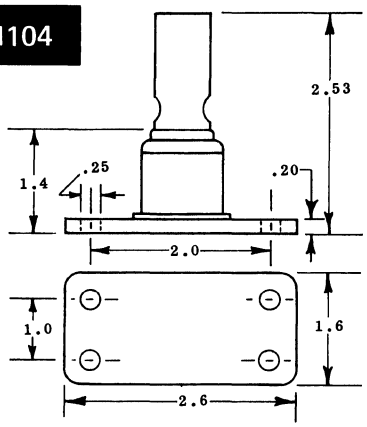

M116

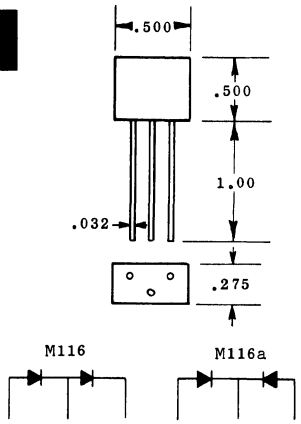

M117

	A	B	C	D	E
M117	.445	.172	.30 MAX.	.021 MAX.	1.10 MIN.
M117a	.34 ±.01	.14 ±.01	.30 MAX.	.021 MAX.	1.10 MIN.
M117b	.468	.20	.312	.021 MAX.	1.10 MIN.
M117c	1.25	.630	1.50	.021 MAX.	1.10 MIN.
M117d	.472	.315	.394	.040	.72 MIN.

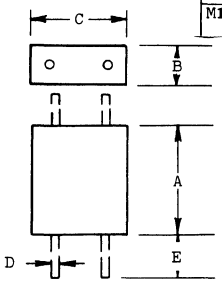

M118

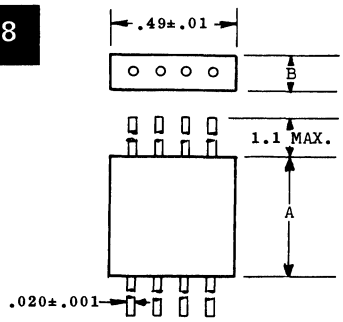

	A	B
M118	.445	.172
a	.340±.01	.14±.01
b	.468	.20

M122

	A	B	C	D	E	F
M122a	.632	.40	.532	.812	.265	.020
M122b	1.032	.80	.532	.812	.265	.020
M122c	1.432	1.20	.532	.812	.265	.020
M122d	1.832	1.60	.532	.812	.265	.020
M122e	1.000	.80	.532	.812	.265	.020
M122f	1.380	1.20	.532	.812	.265	.020
M122g	2.000	1.80	.532	.812	.265	.020
M122h	.500		.312	1.00	.625	.032

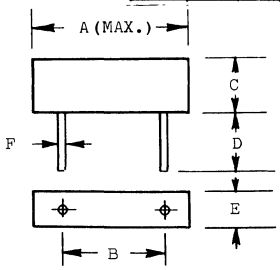

M123

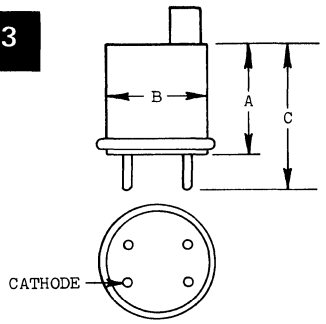

	A	B	C
M123	3.5	1.219	4.313
a	4.438	1.219	5.125

M124

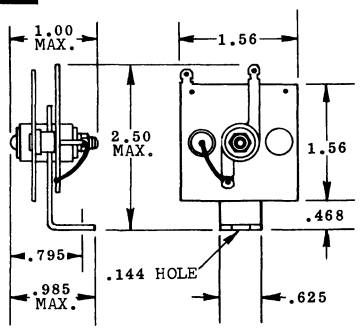

M125

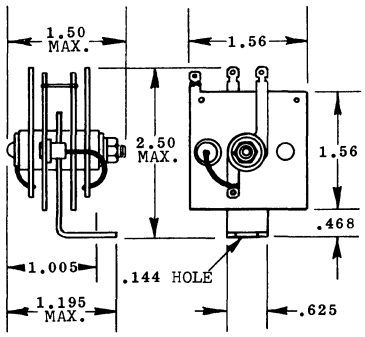

M126

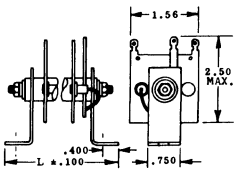

M126	L
A	3.50
B	4.00
C	4.50
D	5.00
E	5.50
F	6.00
G	6.50
H	7.00
J	7.50
K	1.26

M130

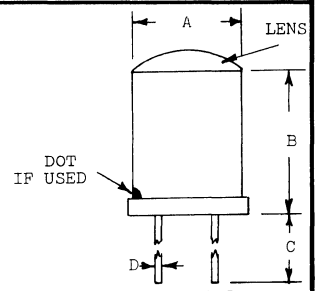

	A	B	C	D	DOT	LEAD 1	LEAD 2
M130	.194	.39					
M130a	.114	.315	1.3	.013	GREEN	CATHODE	ANODE
M130b	.082	.525 ±.75	1.5	.01	RED	EMITTER	COLLECTOR
M130c	.220	.043	1.5	.019		ANODE	CATHODE
M130d	.220	.043	1.5	.019		ANODE	CATHODE
M130e	.188	.209	.500	.015	TAB	CATHODE	ANODE

15. OUTLINE DRAWINGS

IN DRAWING NUMBER SEQUENCE

M131

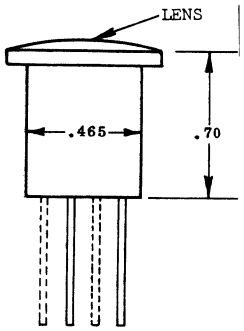

M131a HAS 4 LEADS.

M133

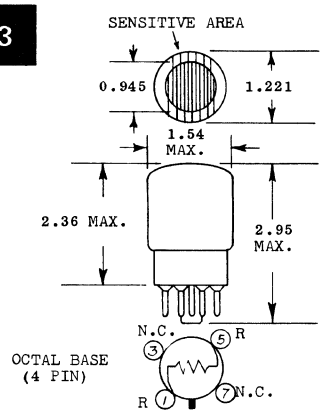

M134

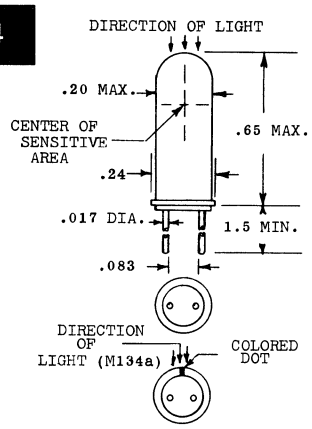

M135

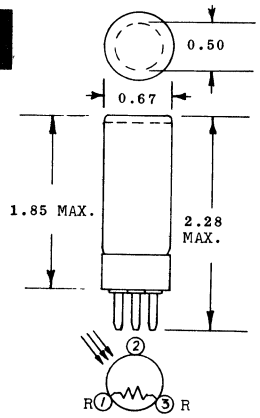

M136

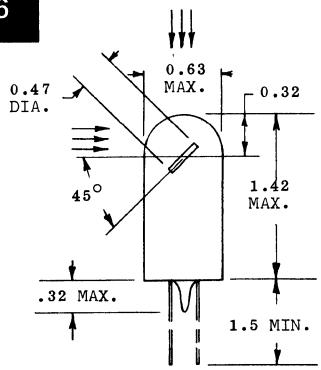

M137

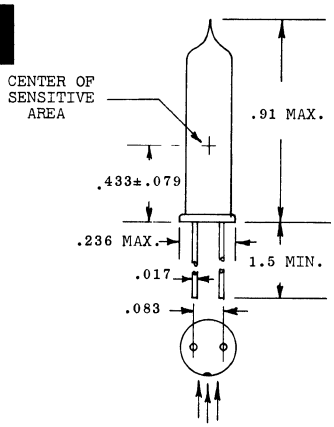

M138

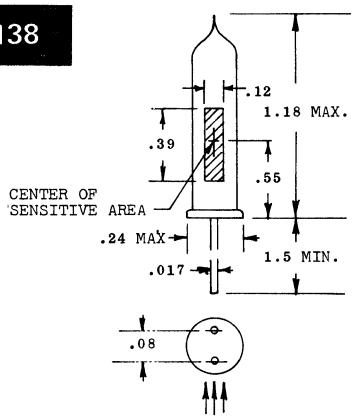

M139

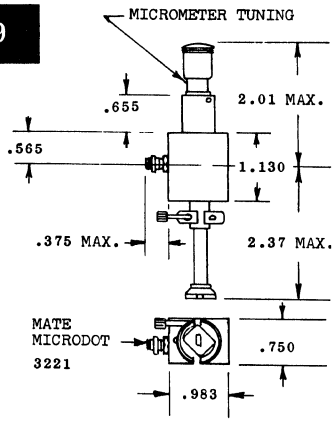

M141

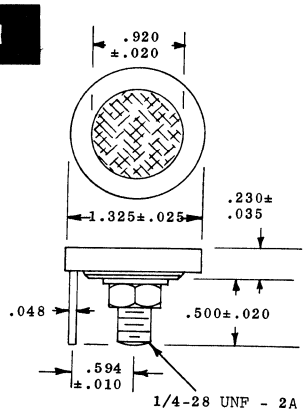

M142

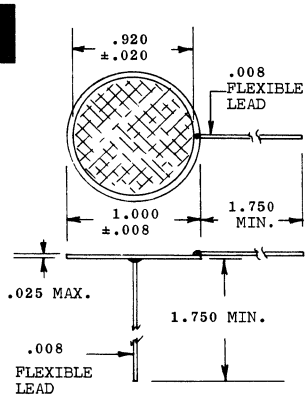

M143

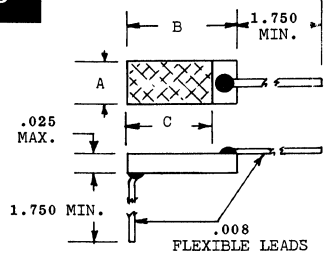

	A	B	C
M143	.048	.132	.100
M143a	.084	.184	.150

M144

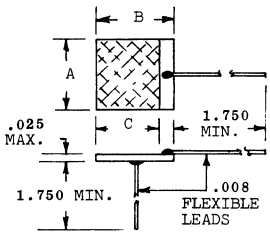

	A	B	C
M144	.250	.250	.205
M144a	1.000	.250	.205
M144b	.750	.250	.205
M144c	.500	.250	.205
M144d	.750	.500	.455

15. OUTLINE DRAWINGS

IN DRAWING NUMBER SEQUENCE

M145

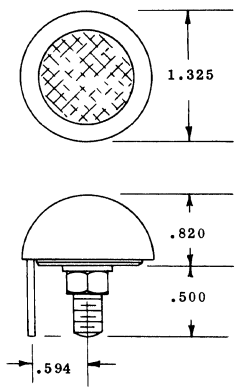

M146

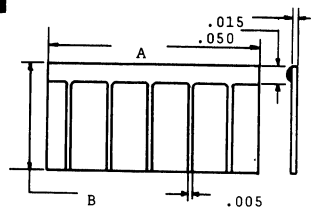

	A	B
M146	.788	.394
M146a	.788	.788
M146b	1.182	.788
M146c	1.576	.788
M146d	2.364	.788

M147

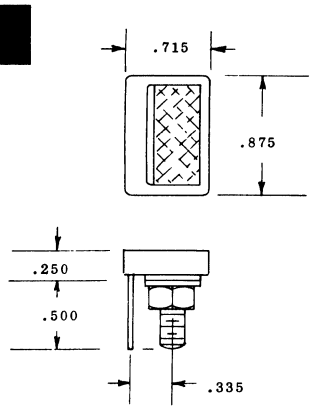

M148

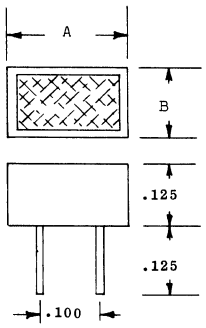

	A	B
M148	.175	.075
M148a	.245	.135

M151

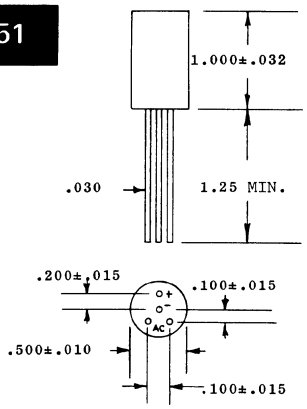

M152

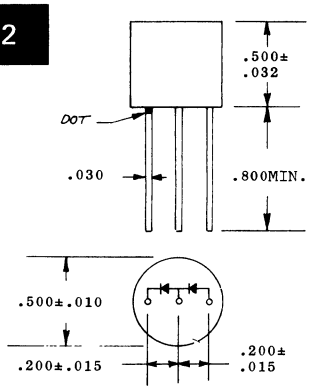

M161

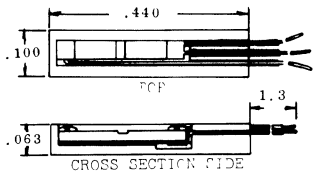

M162

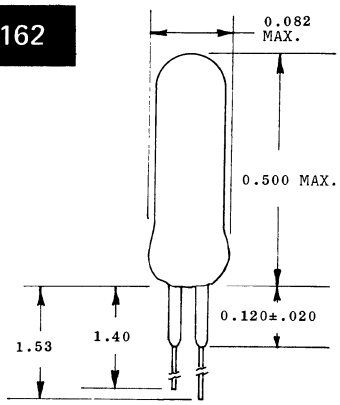

M163

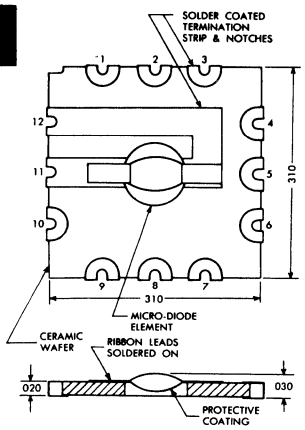

M165

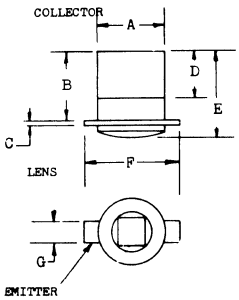

	A	B	C	D	E	F	G
M165	.059	.060	.005	.042	.082	.084	.016
	.062	.064	.010	.047	.093	.092	.024
M165a	.058	.078	.004	.062	.125	.083	.018
	.062	.088	.006	.068	MAX	.093	.022

M166

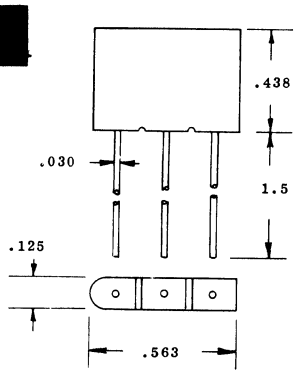

M168

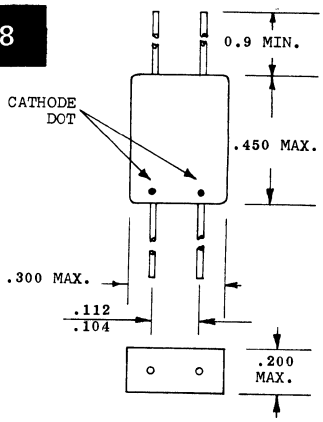

M169

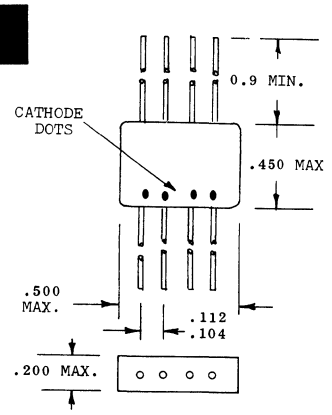

M173

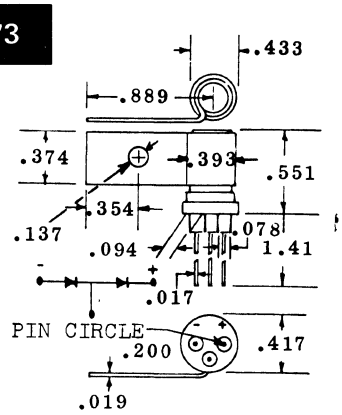

M174

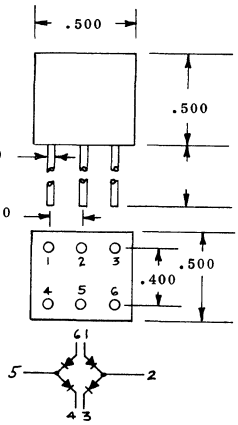

M175

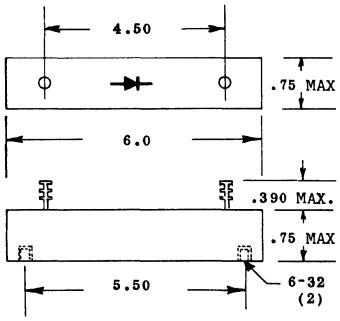

M176

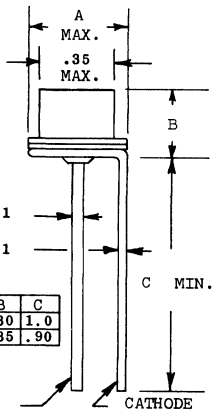

	A	B	C
M176	.42	.30	1.0
M176a	.50	.35	.90

M181

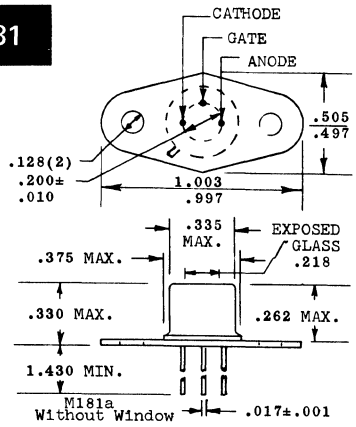

M182

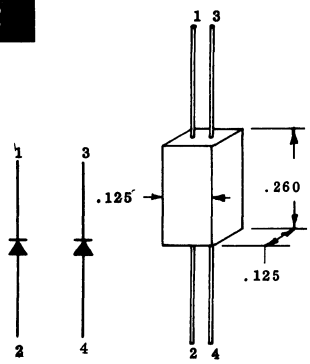

M185

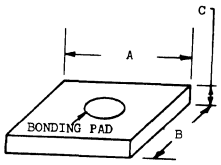

PASSIVATED DIE
N185c ONLY-MADE UP OF
2 CHIPS SIDE BY SIDE.

	A	B	C	BOND. PAD
M185	.020	.020	.007	None
M185a	.045	.045	.007	None
M185b	.055	.055	.007	None
M185c	.020	.141	.006	None
M185d	.015	.015	.006	None
M185e	.020	.020	.003 .005	.003 Dia

M187

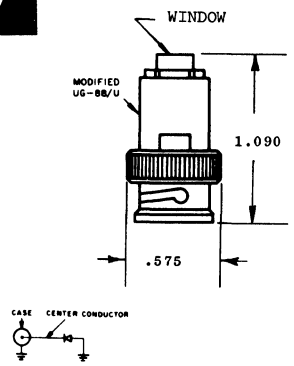

M188

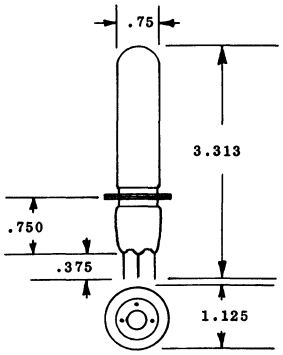

M189

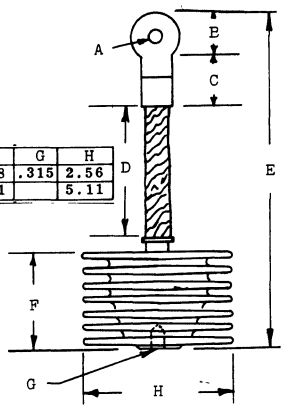

	A	B	C	D	E	F	G	H
M189	.244	.354	1.06	1.97	5.20	1.58	.315	2.56
M189a	.405				12.8	5.31		5.11

M190

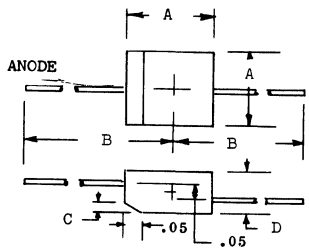

	A	B	C	D
M190a	.210	.870	.025	.160
M190b & c	.320	.870	.025	.160
M190d	.360	.870	.025	.160
M190e	.410	.870	.025	.160
M190f	.200	.870	.025	.160
M190g	.300	.870	.025	.160
M190h	.350	.870	.025	.160
M190j	.300	1.45	.030	.145
M190k	.350	1.45	.030	.145
M190m	.400	1.45	.030	.145

15. OUTLINE DRAWINGS

IN DRAWING NUMBER SEQUENCE

M191

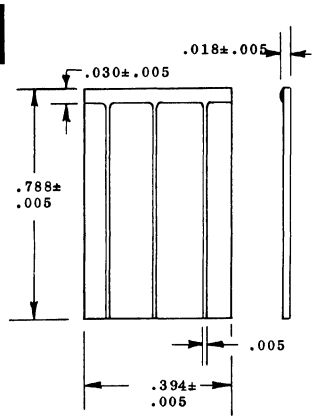

M192

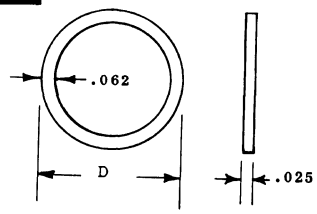

	D
M192	1.125
M192a	.281

M193

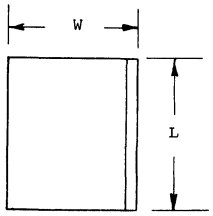

M193	W	L
a	.40	.80
b	.20	.40
c	.20	.20
d	.20	.10
e	.20	.80
f	.40	.40

M194

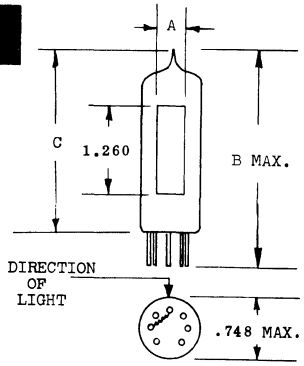

	A	B	C
M194	.354	2.40	
M194a	.295		2.362

M195

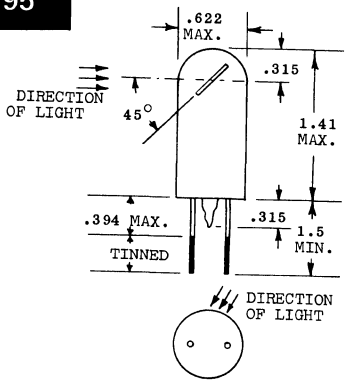

M197

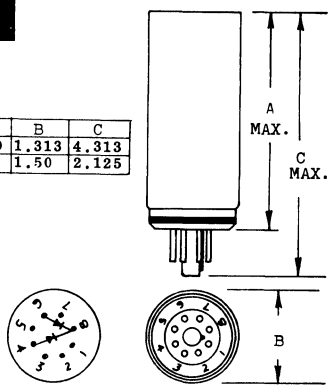

	A	B	C
M197	3.750	1.313	4.313
M197a	1.50	1.50	2.125

M198

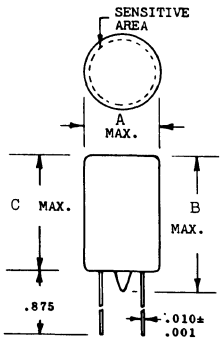

	A	B	C
M198	.250	.455	.400
M198a	.260	.670	.545

M199

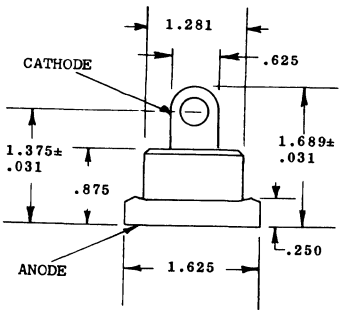

M201

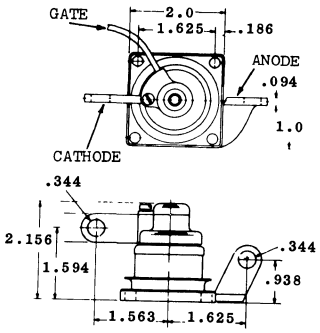

M204

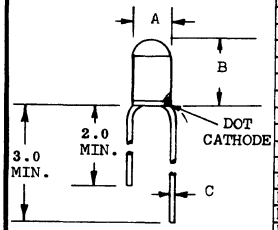

	A	B	C
M204a	.165	.225	.025
M204b	.190	.265	.025
M204c	.265	.265	.025
M204d	.285	.265	.025
M204e	.345	.265	.025
M204f	.320	.395	.032
M204g	.360	.425	.032
M204h	.395	.425	.032
M204j	.465	.525	.032
M204k	.350	.470	
M204m	.400	.470	
M204n	.470	.550	
M204p	.380	.620	
M204q	.380	.990	
M204r	.500	.620	
M204s	.500	.990	
M204t	.640	.754	
M204u	.640	.990	
M204v	1.060	.620	
M204w	1.060	.990	
M204x	1.380	.620	
M204y	1.380	.990	

M205

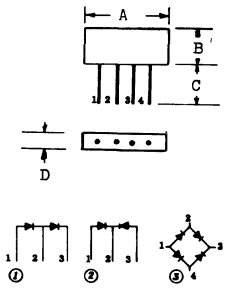

	A	B	C	D	# LEADS	SCHEMATIC
M205a	.360	.380	3.0		3	1
M205b	.420	.380	3.0		3	1
M205c	.480	.380	3.0		3	1
M205d	.360	.380	3.0		3	2
M205e	.420	.380	3.0		3	2
M205f	.480	.380	3.0		3	2
M205g	.480	.380	3.0		4	3
M205h	.370	.500 MAX	.500 MIN	.250 MAX	4	2
M205j	.650	.500 MAX	.500 MIN	.250 MAX	4	2
M205k	.925	.500 MAX	.500 MIN	.250 MAX	4	2
M205m	1.2	.500 MAX	.500 MIN	.250 MAX	4	2
M205n	1.75	.500 MAX	.500 MIN	.250 MAX	4	2

15. OUTLINE DRAWINGS

IN DRAWING NUMBER SEQUENCE

M206

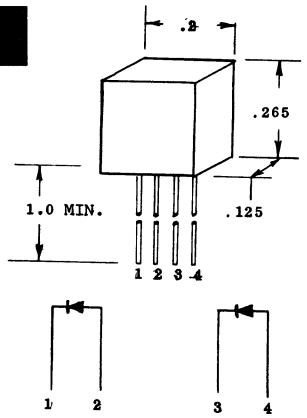

M207

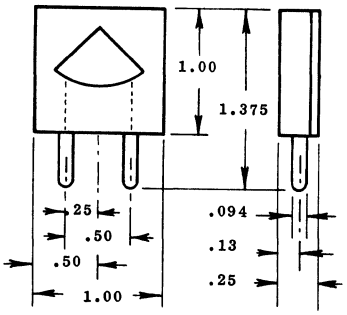

M208

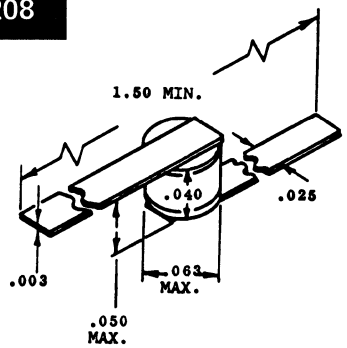

M208a-WITH RIBBON LEADS
M208b-WITHOUT LEADS (PELLET)

M210

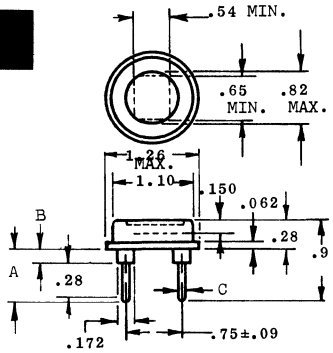

	A	B	C
M210	.500	.156	.040
M210a	1.50	.060	.017

M212

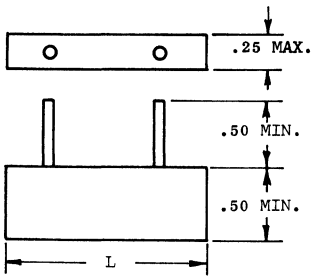

	L
M212	.650
M212a	1.0
M212b	1.25
M212c	1.75
M212d	.370
M212e	.925
M212f	1.2

M213

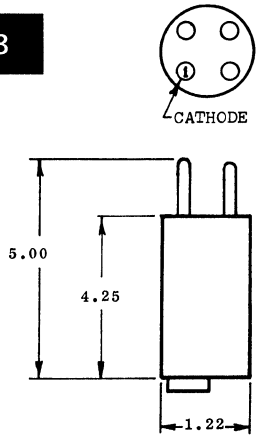

M214

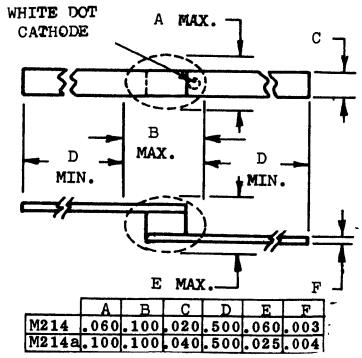

	A	B	C	D	E	F
M214	.060	.100	.020	.500	.060	.003
M214a	.100	.100	.040	.500	.025	.004

M215

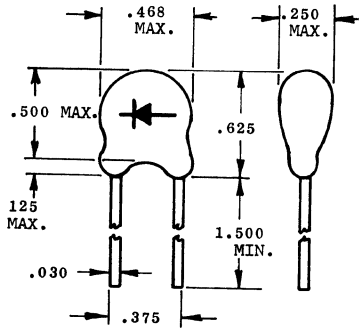

M217

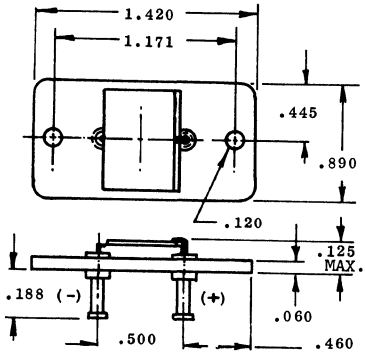

M218

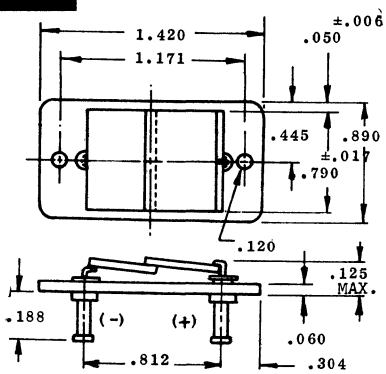

M219

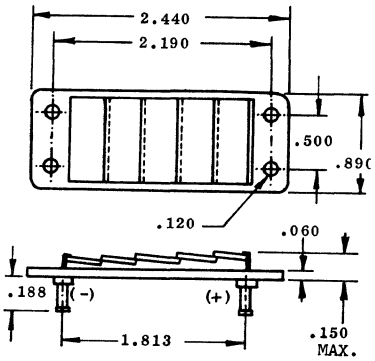

M221

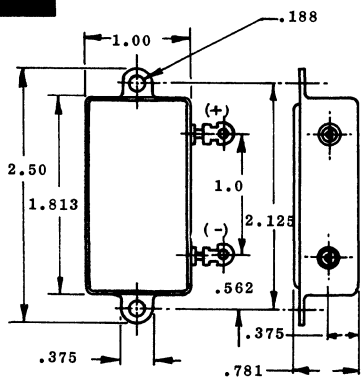

15. OUTLINE DRAWINGS

IN DRAWING NUMBER SEQUENCE

M222

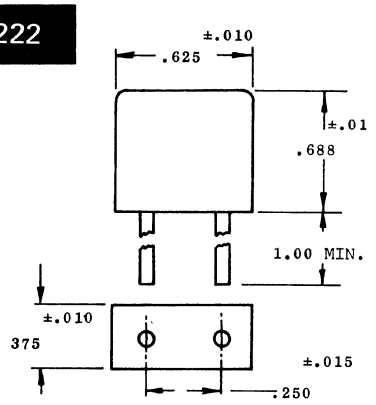

M223

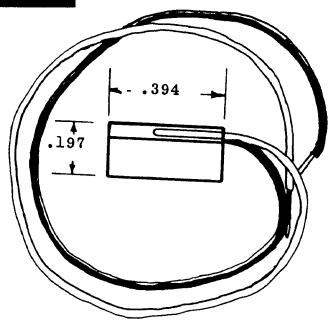

M226

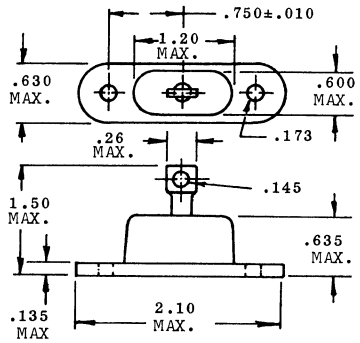

M227

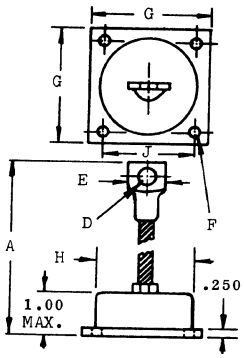

	A	D	E	F	G	H	J
M227	7.10	.343	.64	.203	2.35	1.72	1.75
M227a	6.9	.531	1.00	.281	3.00	2.10	2.50
M227b	6.9	.562	1.14	.281	3.00	2.20	2.50

M228

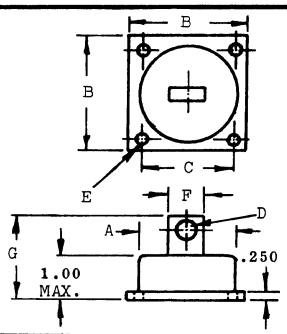

	A	B	C	D	E	F	G
M228	1.72	2.25	1.75	.375	.203	.760	1.9
M228a	2.20	3.00	2.50	.562	.281	1.10	2.7
M228b	2.10	3.00	2.50	.562	.281	1.10	2.0
M228c	2.89	3.25	2.75	.562	.281	1.25	2.50
M228d	1.77	244	1.77	.255	.330	.511	1.77

M235

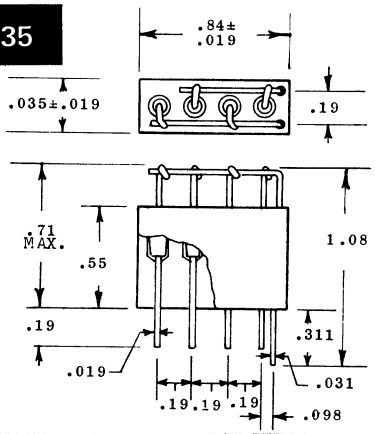

M236

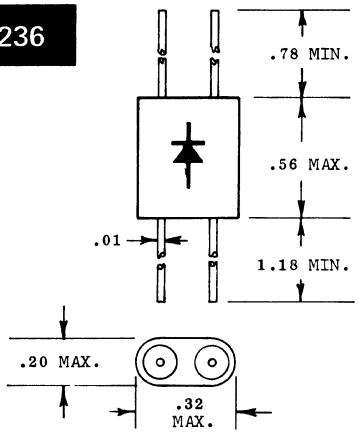

M237

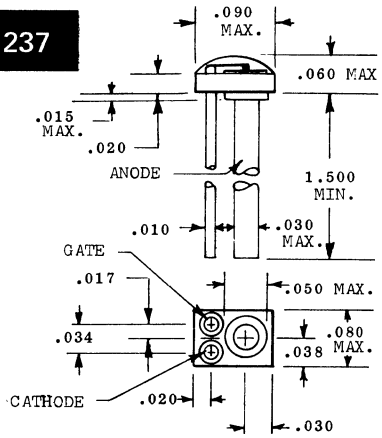

M239

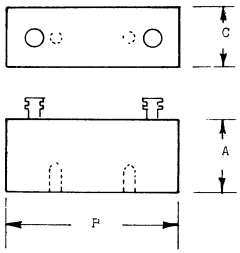

	A	B	C
M239a	.75	1.0	.75
M239b	.75	1.5	.75
M239c	.75	2.0	.75
M239d	.75	2.5	.75
M239e	.75	3.0	.75
M239f	.75	3.5	.75
M239g	.75	5.0	.75
M239h	.75	5.5	.75
M239j	.75	6.0	.75
M239k	.75	6.5	.75
M239l	.75	7.0	.75
M239m	1.25	8.0	2.0
M239n	1.25	10	2.0
M239p	1.25	12	2.0
M239q	1.5	8.0	4.0
M239r	1.5	12	4.0
M239s	1.5	14	4.0

	A	B	C
M239t	1.0	2.0	1.0
M239u	1.0	3.0	1.0
M239v	1.0	3.5	1.0
M239w	1.0	4.0	1.0
M239x	1.0	4.8	1.0
M239y	1.0	5.5	1.0
M239z	1.0	6.0	1.0
M239aa	1.0	6.5	1.0
M239ab	1.0	7.0	1.0
M239ac	1.0	4.0	2.0
M239ad	1.0	6.0	2.0
M239ae	1.0	8.0	2.0
M239af	1.0	4.0	3.0
M239ag	1.0	6.0	3.0
M239ah	1.0	8.0	3.0
M239aj	1.0	4.0	4.0
M239ak	1.0	6.0	4.0

M240

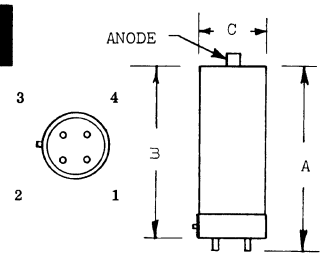

	A	B	C	PIN CONN.
M240a	7.75	7.38	2.31	4
M240b	9.75	9.38	3.88	4
M240c	8.25	7.50	2.31	3
M240d	9.13	8.38	3.63	2
M240e	7.75	7.38	1.70	2
M240f	9.50	9.12	1.70	2
M240g	11.0	10.4	2.00	2
M240h	8.25	7.50	2.00	2

M245

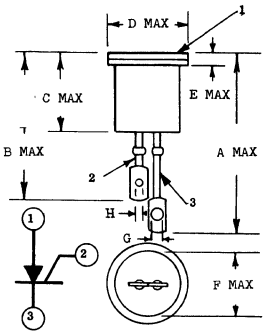

	A	B	C	D	E	F	G	H
M245	.780	.650	.335	.390	.090	.280	.065	.050
M245a	.906	.709	.394	.532	.130	.433	.094	.055
M245b	.748	.591 MAX	.295	.414	.0394	.346	.065	.065

M246

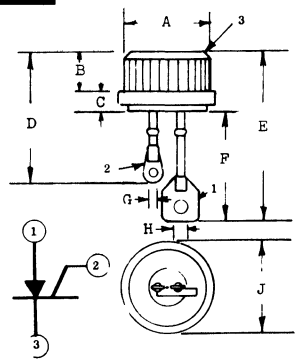

	A	B	C	D	E	F	G	H	J	1	2	3
M246	.501 .505	.235 .245	.150 MAX	.867 MAX	1.115 MAX	.745 MAX	.065	.120	.635 MAX			
M246a	.467 .475	.255 .305	.075 MIN	.590 .665	.775 .850	.420 .470	.040 .075	.040 .075	.501 .505	G	MAIN TERM 1	MAIN TERM 2

M247

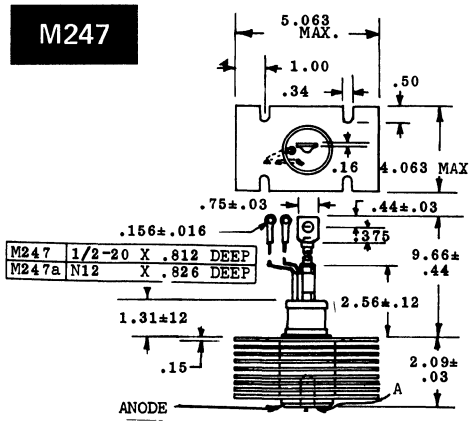

M247	1/2-20 X	.812 DEEP
M247a	N12 X	.826 DEEP

M248

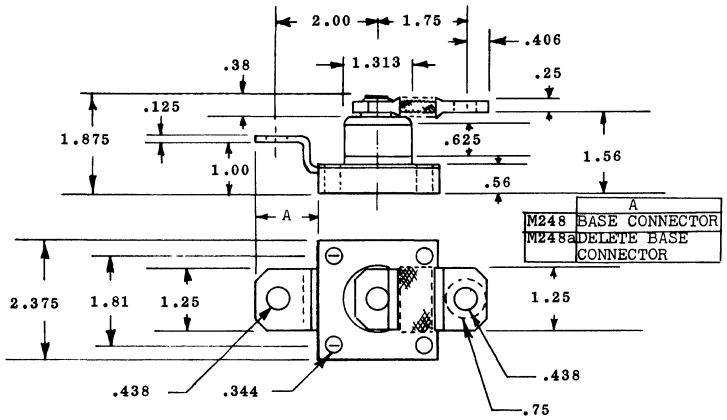

	A
M248	BASE CONNECTOR
M248a	DELETE BASE CONNECTOR

M249

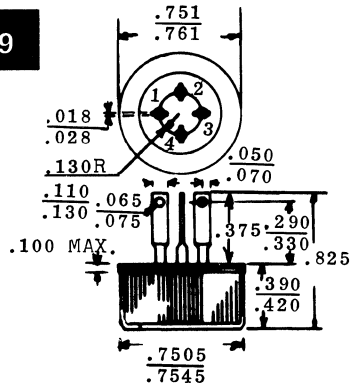

M251

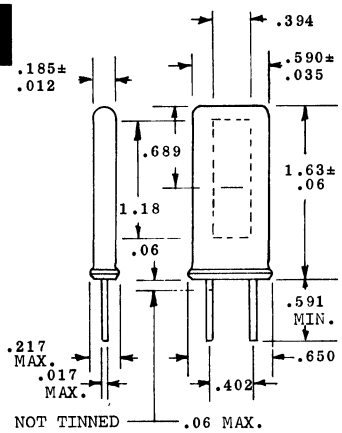

M252

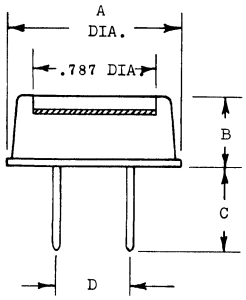

	A	B	C	D
M252	1.07	.433	.394	.512
M252a	1.09	.394	.433	.473
M252b	1.26	.314	.590	.738 .758

M253

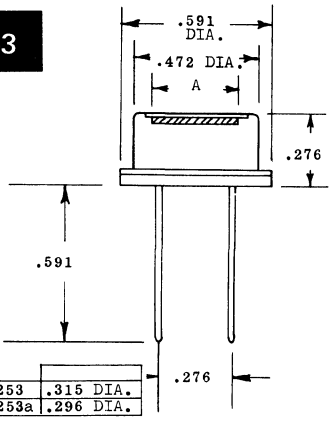

M253	.315 DIA.
M253a	.296 DIA.

M254

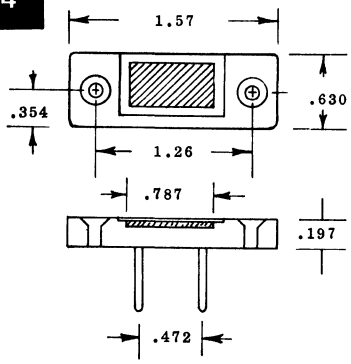

M255

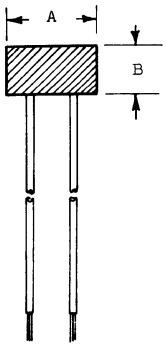

	A	B
M255	.177	.118
M255a	.197	.197

M264

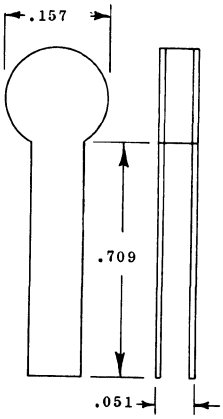

15. OUTLINE DRAWINGS

IN DRAWING NUMBER SEQUENCE

M265

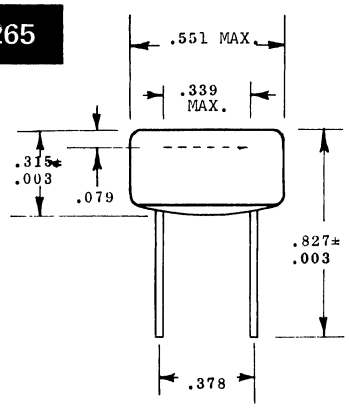

M266

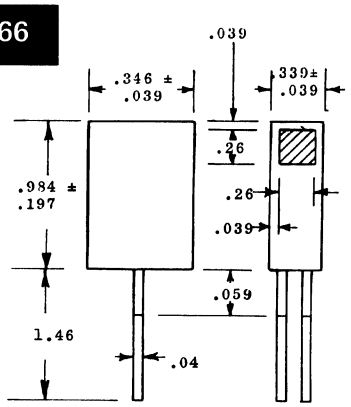

M267

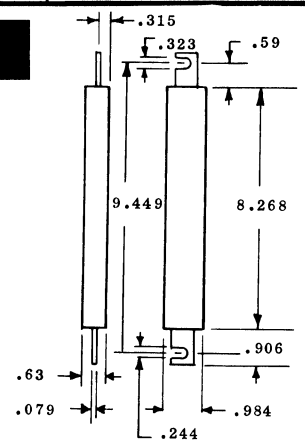

M269

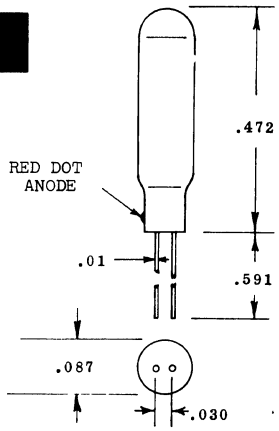

M270

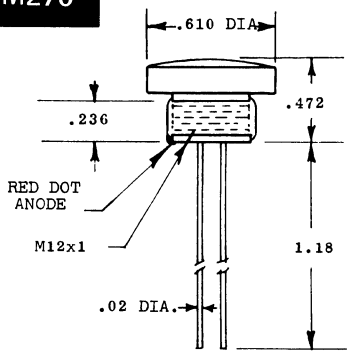

M271

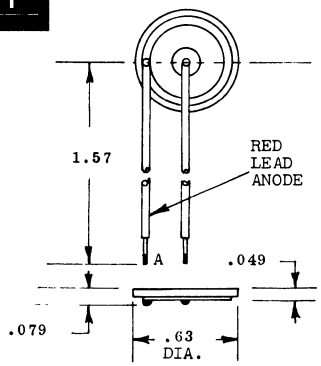

M272

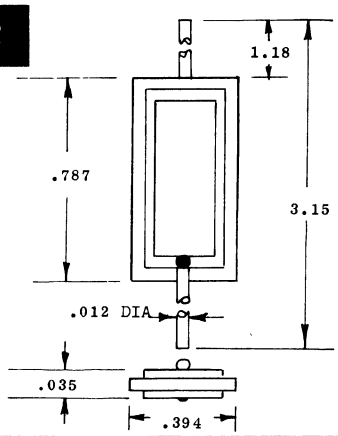

M273

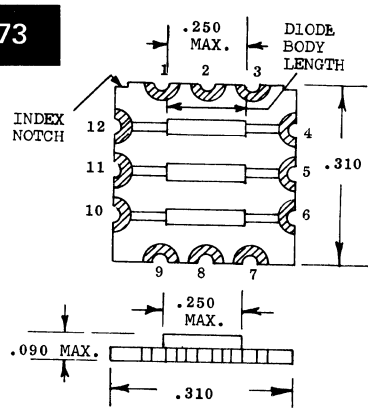

M274

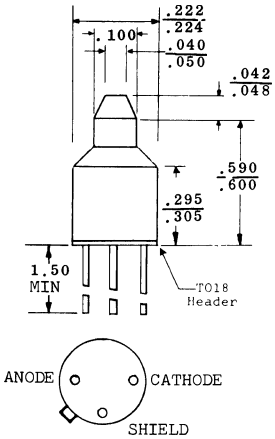

M275

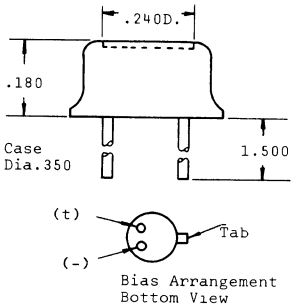

M276

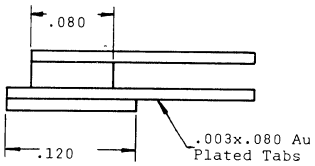

M277

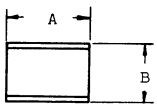

	A	B
M277	.030	.023
M277a	.050	.020
M277b	.053	.047
M277c	.040	.025
M277d	.035	.020

15. OUTLINE DRAWINGS

IN DRAWING NUMBER SEQUENCE

M279

	L
M279	1.750
M279a	1.880

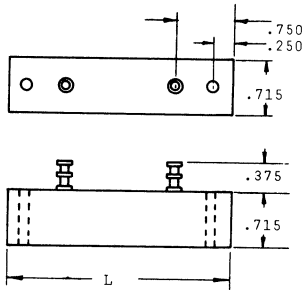

M280

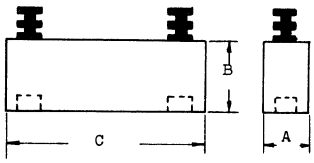

	A	B	C
M280	1.5	1.0	4.0
M280a	1.5	1.0	6.5
M280b	2.0	1.0	6.5

M284

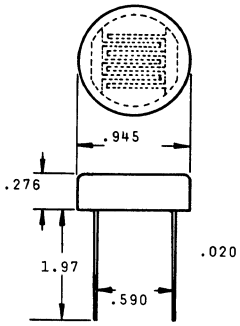

M285

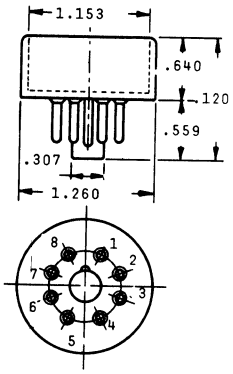

M286

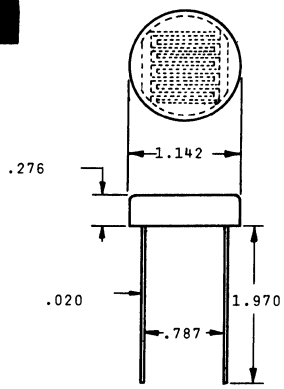

M287

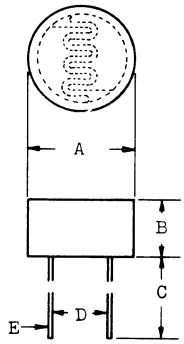

	A	B	C	D	E
M287	.244	.118	1.97	.126	.018
M287a	.520	.240	1.00 MIN	.265	.016

M288

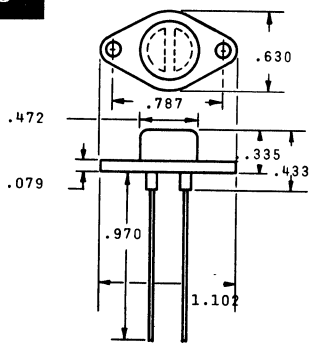

M289

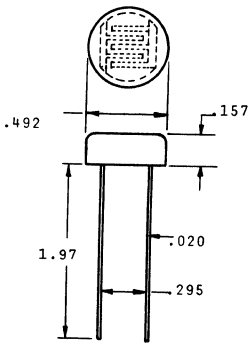

M291

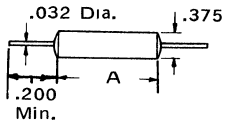

	A		A
M291	.563		
M291a	.688	M291j	1.500
M291b	.750	M291k	1.750
M291c	.875	M291m	1.938
M291d	1.000	M291n	2.313
M291e	1.063	M291p	2.675
M291f	1.188	M291q	3.000
M291g	1.313	M291r	3.500
M291h	1.375	M291s	4.063

M293

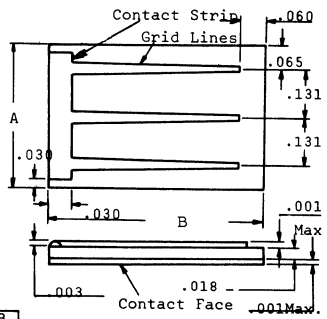

	A	B
M293	.394	.788
M293a	.788	.788
M293b	.394	.788
M293c	.788	.394
M293d	.788	.788
M293e	1.18	1.18

M294

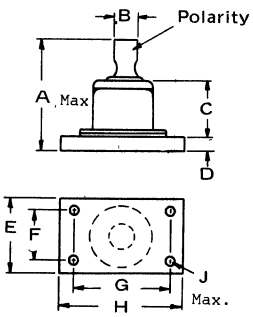

	A	B	C	D	E	F	G	H	J	POLARITY
M294	2.70	.600 .630	1.38	.200	1.59	.980	1.97	2.57	.260	ANODE
M294a	2.70	.600 .630	1.38	.200	1.59	.980	1.97	2.57	.260	CATHODE
M294b	3.07	.629	1.77 MAX	.177 .216	1.57 MAX	.984	1.96	2.55	.251 .259	ANODE

M297

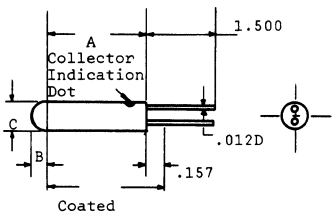

	A	B	C
M297	.472	.059	.083
M297a	.669	.078	.078

15. OUTLINE DRAWINGS

IN DRAWING NUMBER SEQUENCE

M298

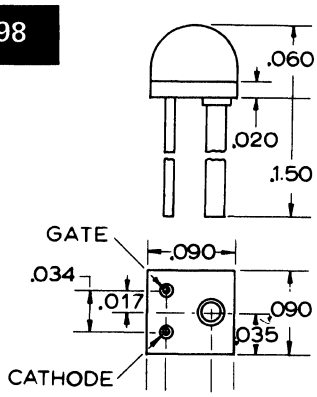

M303

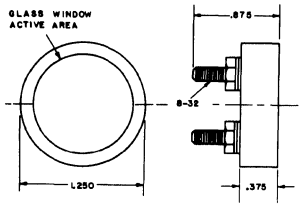

M304

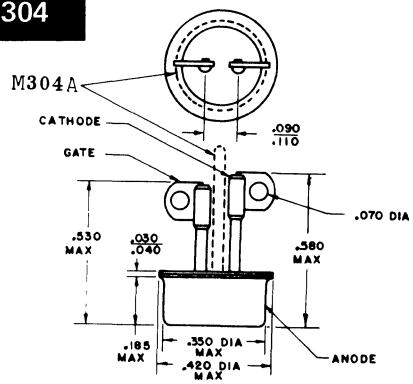

M305

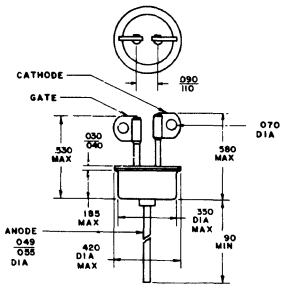

M306

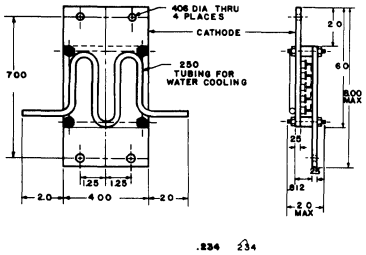

M307

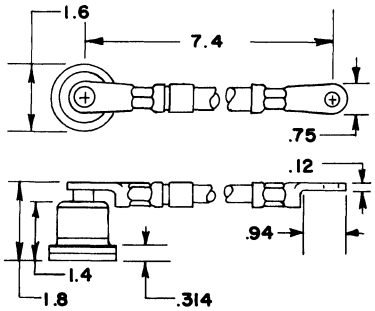

M308

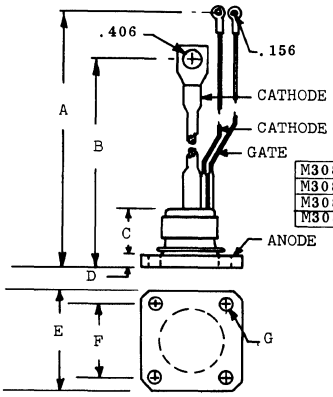

	A	B	C	D	E	F	G	H
M308	7.50	6.60		.315	2.0	1.36	.261	.406
M308a	6.81	10.0	1.31	.500	2.38	1.81	.344	.406
M308b		10.6		.735	3.02		.346	.500
M308c		10.0	1.31	.500	2.44	1.81	.343	.406

M312

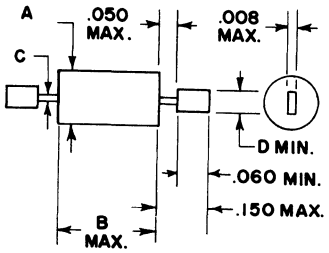

	A	B	C	D
M312	.075	.175	.015	.030
M312a	.107	.300	.020	.040

M314

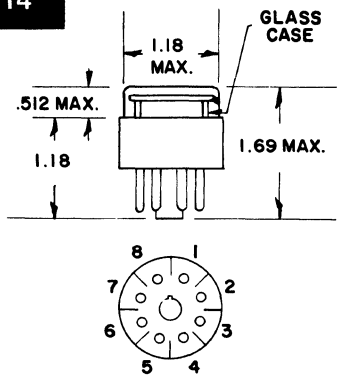

M318

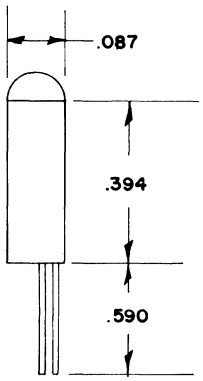

M322

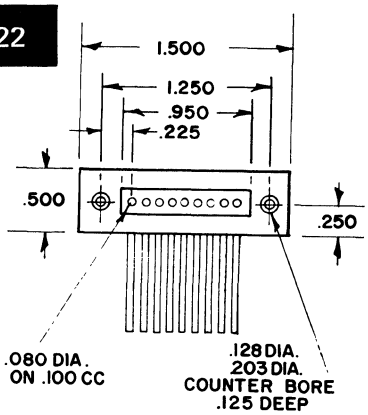

15. OUTLINE DRAWINGS

IN DRAWING NUMBER SEQUENCE

M323

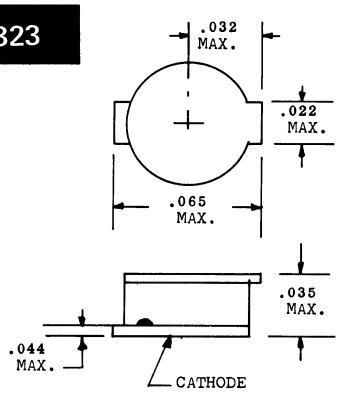

M324

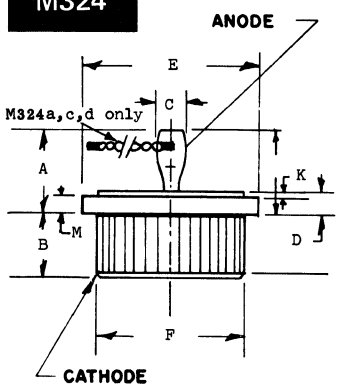

	A	B	C	D	E	F	G	H	J	K	M
M324	.354	.244	.130	.114	.625	.500					
M324a	.354	.244	.130	.114	.625	.500					
M324b	.472	.264		.094	.625	.500				.024	.094
M324c	.472	.264		.094	.625	.500				.024	.094
M324d	.472	.264		.094	.625	.500				.024	.094
M324e	.378	.217	.157	.115	.622	.500			.028	.024	.091
	.409	.236	.165	.130	.626	.504			.035	.032	.098
M324f	.378	.217	.157	.115	.622	.500	.063	.067	.028	.024	.091
	.409	.236	.165	.130	.626	.504	.079	.091	.035	.032	.098

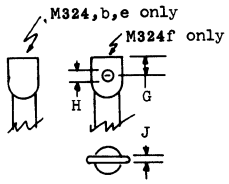

NOTES: A&C - LEAD HORIZONTAL
D - LEAD VERTICAL

M326

	L
M326	1.62
M326a	2.62
M326b	2.37
M326c	3.25
M326d	4.50
M326e	5.50
M326f	7.00
M326g	8.25
M326h	10.3
M326j	13.3
M326k	16.3
M326l	25.0

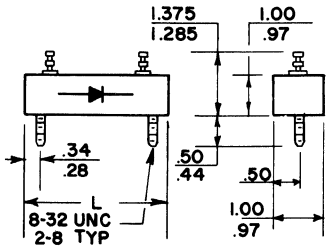

M327

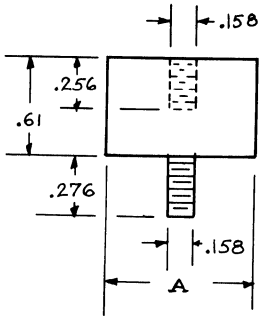

	A
M327	.787
M327a	1.97

M329

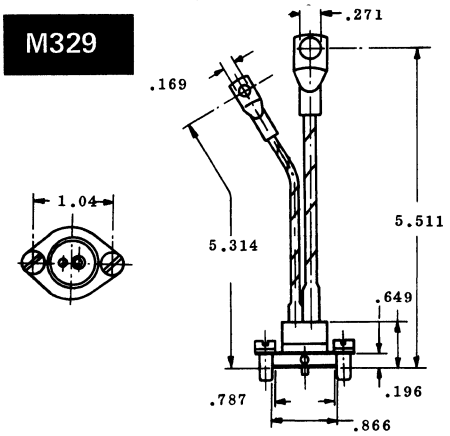

M330

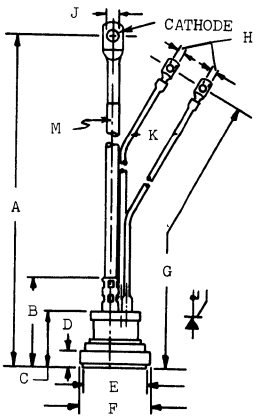

	A	B	C	D	E	F	G	H	J	K	M
M330	6.94	1.82	1.11	.314	1.32	1.44	6.94	.169	.271	.019	.629
M330a	7.87	2.44	1.33	.393	1.96	2.12	8.07	.169	.413	.019	1.37
M330b	7.08	1.88	1.22	.314	1.29	1.41	7.08	.169	.251	.019	.393
M330c	10.03	2.59	1.39	.393	1.96	2.12	10.4	.169	.511	.019	2.75
M330d	10.4	2.99	1.77	.393	1.96	2.12	10.8	.169	.511	.019	2.75

M331

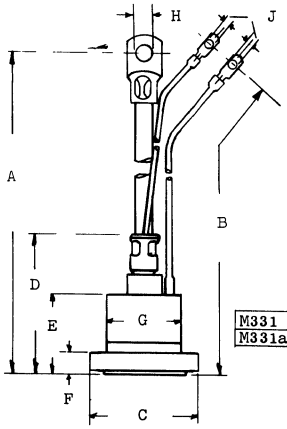

	A	B	C	D	E	F	G	H	J
M331	8.47	9.47	2.16	2.62	1.54	.393	1.50	.413	.169
M331a	6.25	6.25	1.90		1.25	.350	1.50	.406	.147

M337

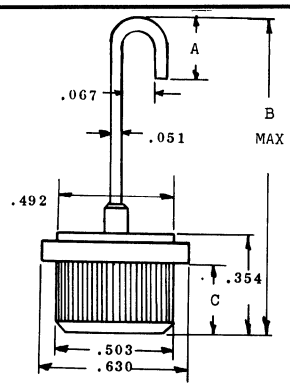

	A	B	C
M337	.197	.906	.255
M337a	.177	.826	.267

15. OUTLINE DRAWINGS

IN DRAWING NUMBER SEQUENCE

M338

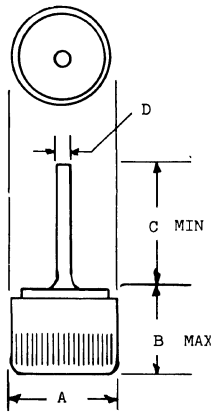

	A	B	C	D
M338	.505	.425	.50	.051
M338a	.217	.217	1.5	.03

M340

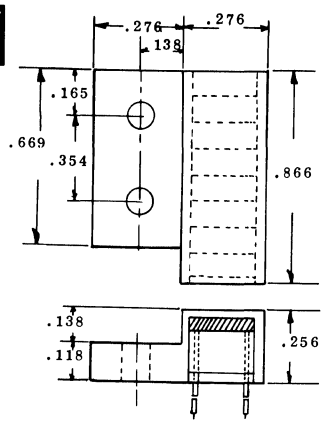

M341

	A	B
M341	.315	.079
M341a	.118	.945

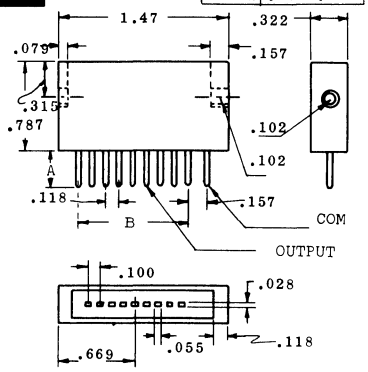

M342

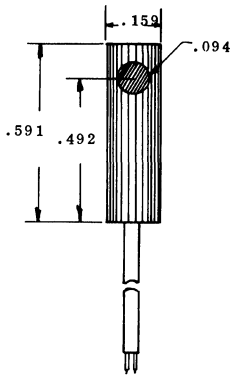

M343

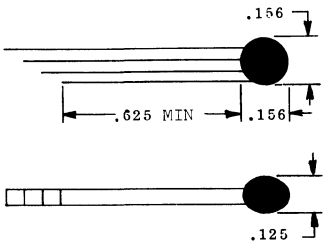

M344

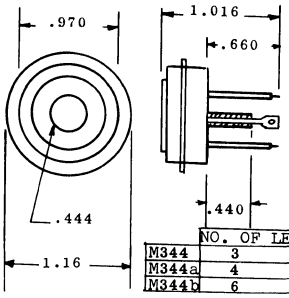

	NO. OF LEADS
M344	3
M344a	4
M344b	6

M345

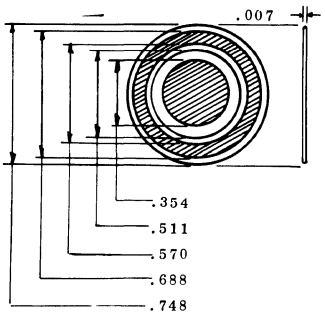

M346

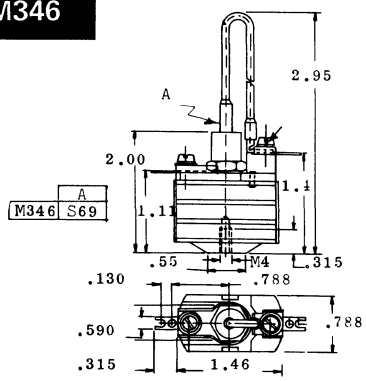

	A
M346	S69

M347

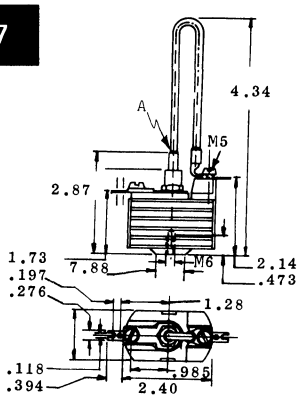

M348

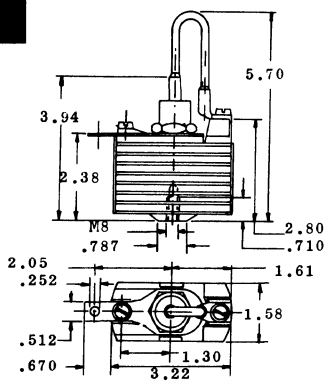

M349

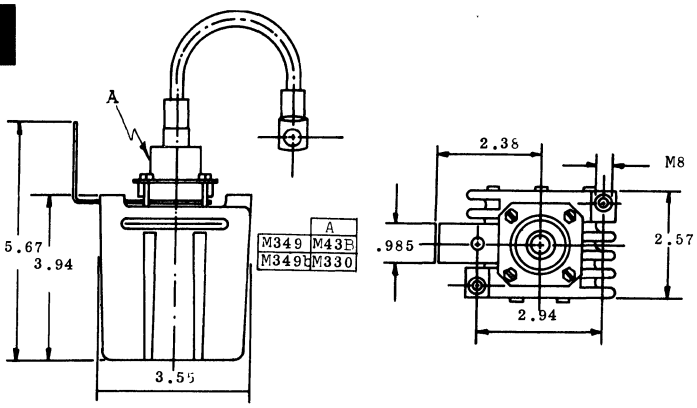

	A
M349	M43B
M349b	M330

15. OUTLINE DRAWINGS

IN DRAWING NUMBER SEQUENCE

M350

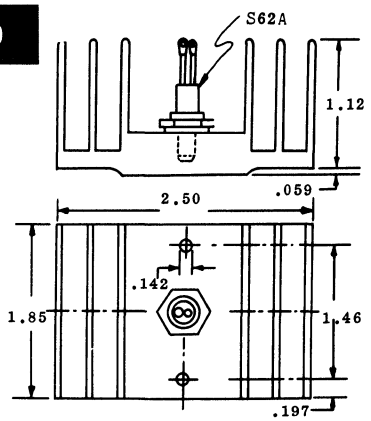

M351

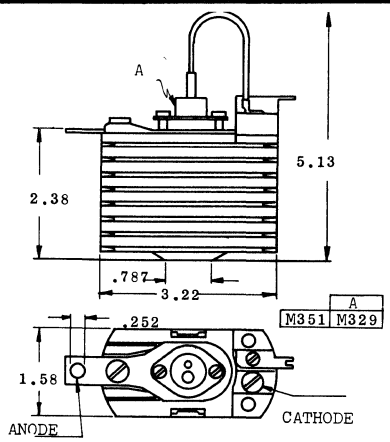

M352

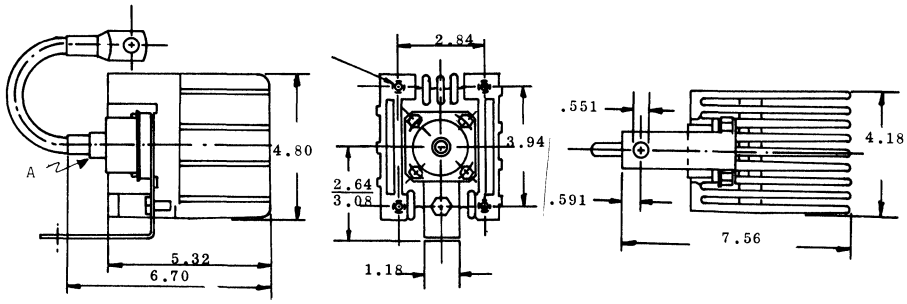

M353

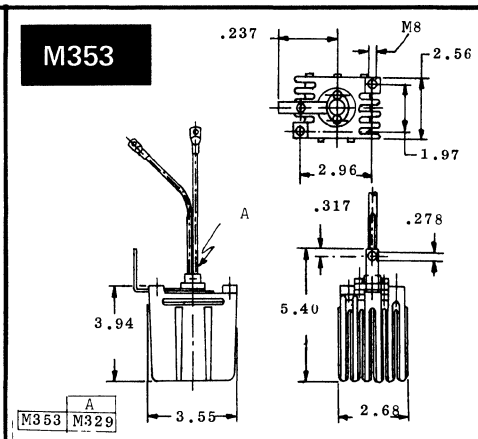

M355

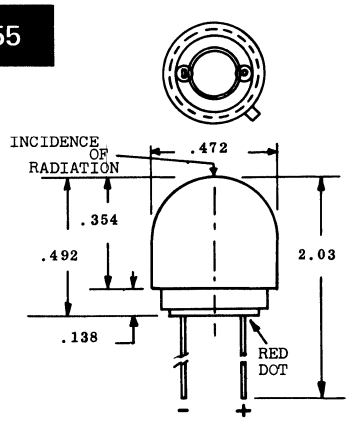

M357

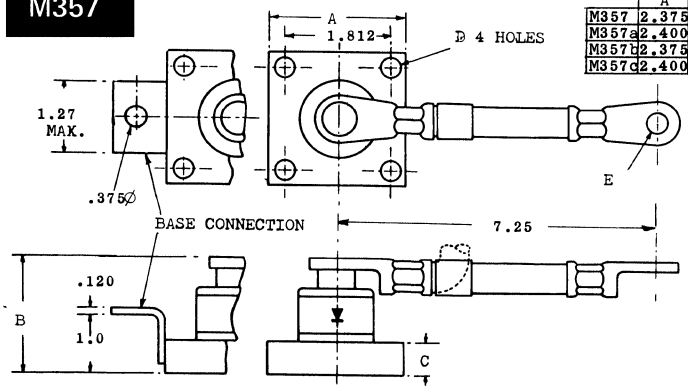

	A	B	C	D	E	BASE CONNECTION
M357	2.375	2.47	.515	.343	.390	OMITTED
M357a	2.400	2.07	.570	.312	.375	OMITTED
M357b	2.375	2.47	.515	.343	.390	INCLUDED
M357d	2.400	2.07	.510	.312	.375	INCLUDED

M363

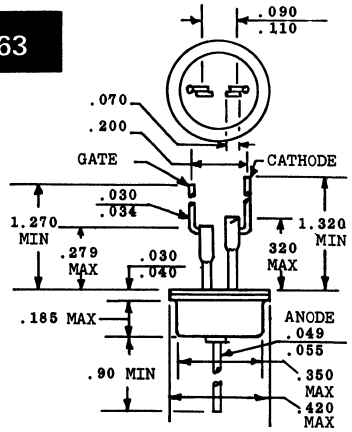

M365

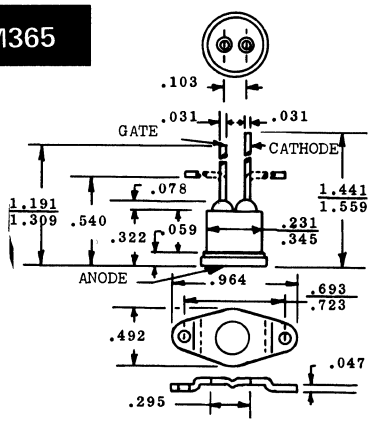

M366

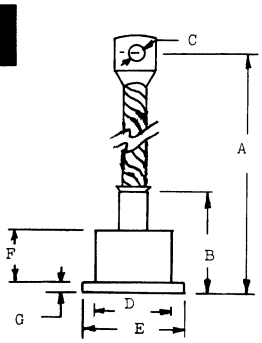

	A	B	C	D	E	F	G
M366	12.02	2.50	.492	1.652	1.960	1.10	.314
M366a	8.87		.375		1.622		.310

M367

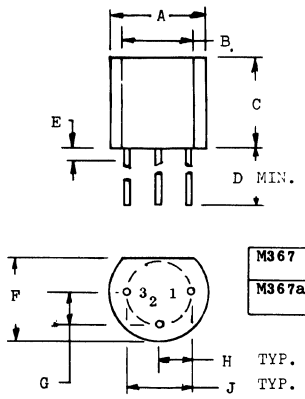

	A	B	C	D	E	F	G	H	J
M367	.195 .205	.15 .17	.180 .190	.500 MIN	.015	.155 .165	.05 TYP	.05 TYP	.10 TYP
M367a	.165 .205	.15 MIN	.170 .210	.500 MIN		.125 .165	.045 .050	.045 .050	.095 .105

M370

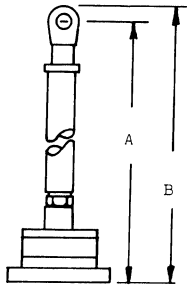

	A	B
M370	9.00	
M370a		10.0

M371

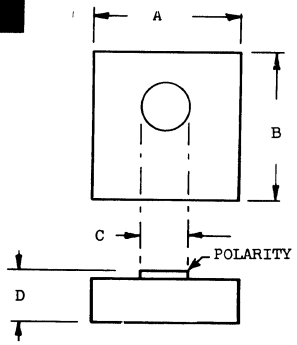

	A	B	C	D	POLARITY
M371	.022 .028	.022 .028	.009 .013	.008 .010	CATHODE
M371a	.017 .023	.017 .023	.002 .011	.003 .010	ANODE
M371b	.037 .043	.037 .043	.016 .025	.003 .010	ANODE
M371c	.020	.020		.011	CATHODE
M371d	.020	.020		.011	ANODE

M372

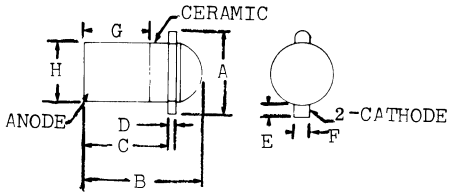

	A	B	C	D	E	F	G	H
M372	.088	.097						.061
M372a	.084 .092	.122 .135	.082 .088	.005 .010	.009 .019	.016 .024	.063 .067	.058 .062
M372b	.084 .092	.102 .115	.080 .089	.080 .089	.025 .036	.016 .024	.062 .069	.059 .062

M375

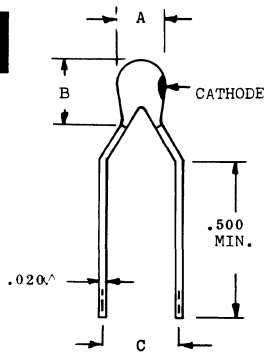

	A	B	C
M375	.118	.157	.197
M375a	.150	.200	

M376

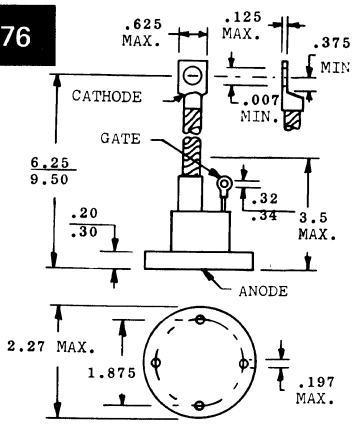

M377

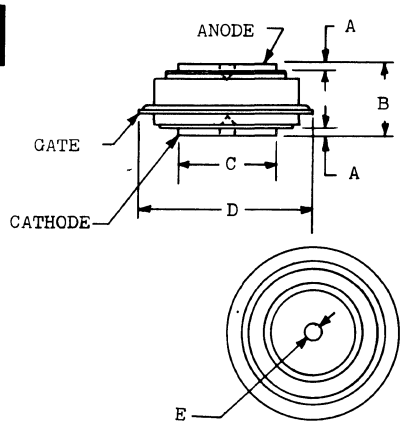

	A	B	C	D	E	F
M377	.020 .075	.500 .625	.744 .752	1.42 1.50	.135 .145	.067 .083
M377a	.080 .120	.500 .625	.744 .752	1.43 1.50	.135 .145	.062 .083
M377b	.020 .030	.510 .555	1.00 1.00	1.62 MAX	.135 .145	.085 .105

M378

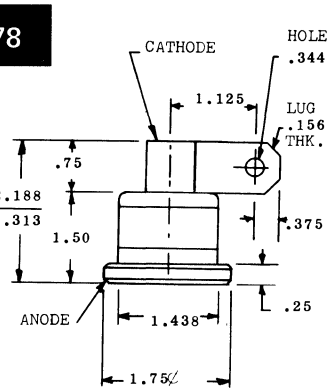

15. OUTLINE DRAWINGS

IN DRAWING NUMBER SEQUENCE

M379

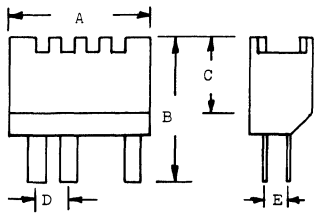

	A	B	C	D	E
M379	.990	.460	.345	.150	.190
M379a	.660	.460	.345	.150	.160

M380

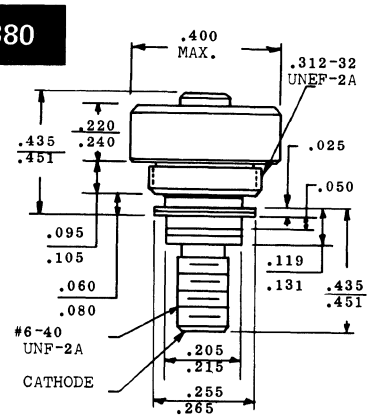

M381

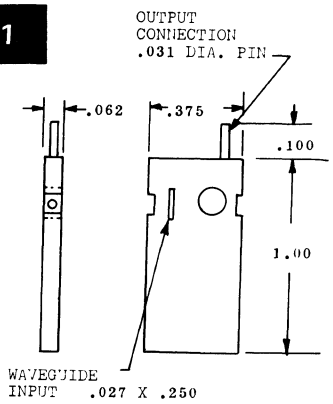

M383

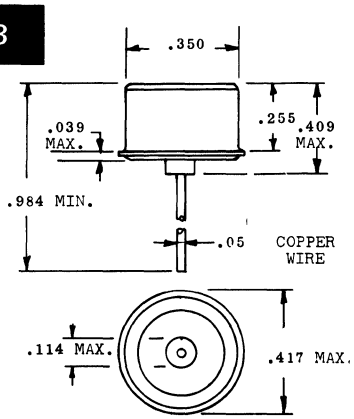

M384

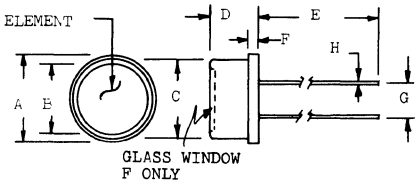

ELEMENT DESIGN

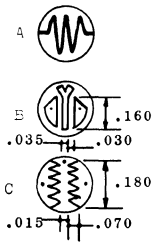

	A	B	C	D	E	F	G	H	ELEMENT
M384	.555	.430	.492	.183	1.515	.045	.295	.016	A
M384a	.360	.240	.325	.180	1.516	.044	.200		A
M384b	.210	.155	.189	.150	.500	.022	.100		A
M384c	.360	.240	.325	.180	1.516	.044	.200		B
M384d	.360	.240	.325	.180	1.516	.044	.200		C
M384e	.630	.413		.225					
M384f	.550	.375	.490	.205	1.50	.045	.300	.016	A
M384g	1.27	.810	1.10	.260	.500		.750		

M385

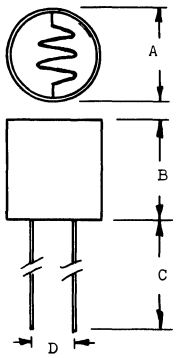

	A	B	C	D
M385	.490	.500	1.500	.250
M385a	.245	.500	1.500	.100

M386

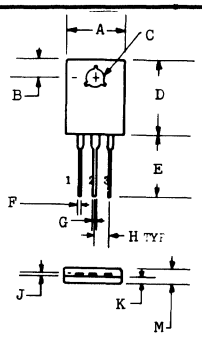

	A	B	C	D	E	F	G	H	J	K	M	1	2	3
M386	.490	.190	.138	.628	.620	.043	.067	.166	.030	.040	.120	C	A	G
	.520	.195	.148	.658	.630	.049	.073		.034	.060	.150			
M386a	.270	.130	.115	.390	.595	.020	.025	.080	.015		.070	T	T	G
	.330	.175	.118	.450	.655	.026	.035	.100	.025		.130	1	2	

M387

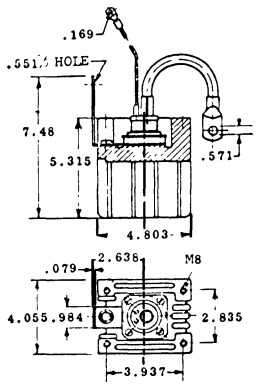

M389

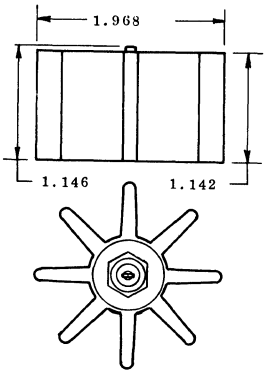

M391

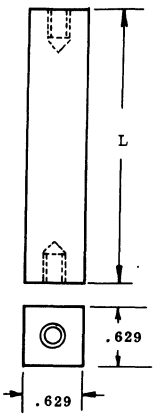

	L
M391	1.77
M391a	3.34

15. OUTLINE DRAWINGS

IN DRAWING NUMBER SEQUENCE

M392

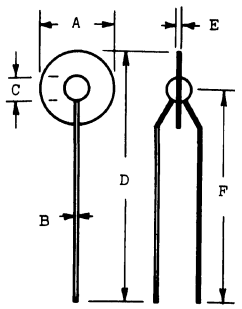

	A	B	C	D	E	F
M392	.591	.019	.276	2.362		
M392a	.709	.019	.315	2.362		
M392b	1.02	.032			.197	1.96
M392c	1.10 MAX	.031	.314 MAX	2.36 MIN		

M393

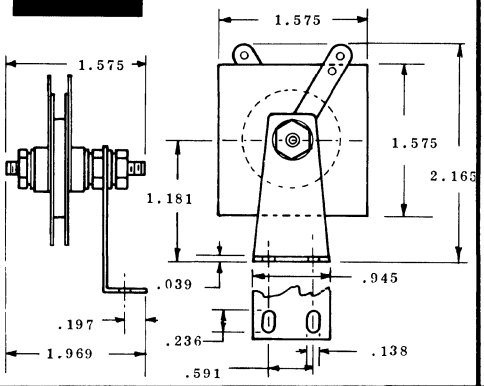

M394

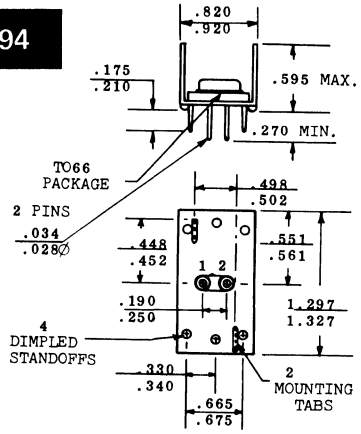

M395

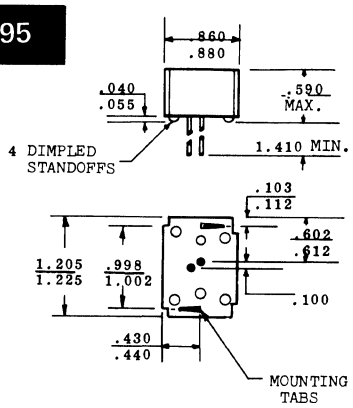

M396

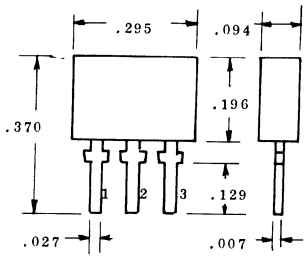

1	2	3
A1	C	A2

M397

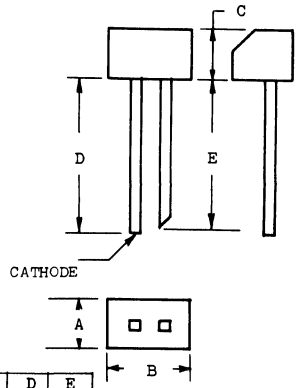

	A	B	C	D	E
M397	.118	.196	.157	.511	.452
M397a	.200	.170	.118	.500	

M398

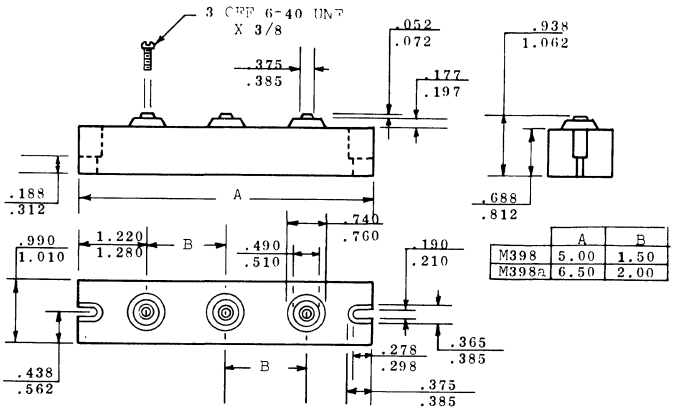

	A	B
M398	5.00	1.50
M398a	6.50	2.00

M399

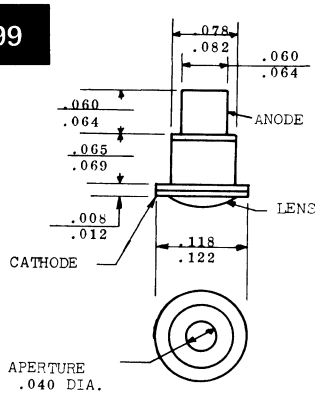

M400

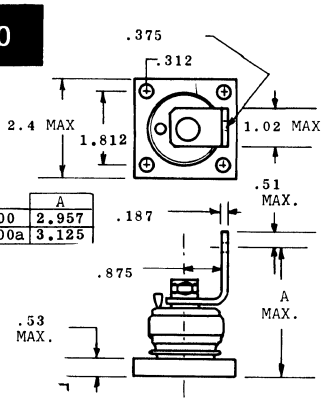

	A
M400	2.957
M400a	3.125

M401

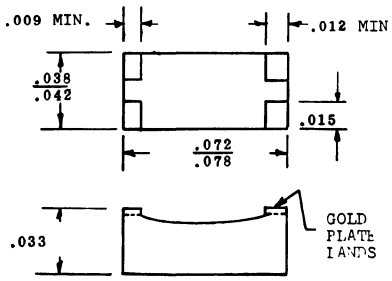

M404

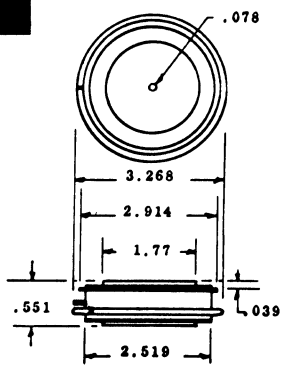

15. OUTLINE DRAWINGS

IN DRAWING NUMBER SEQUENCE

M406

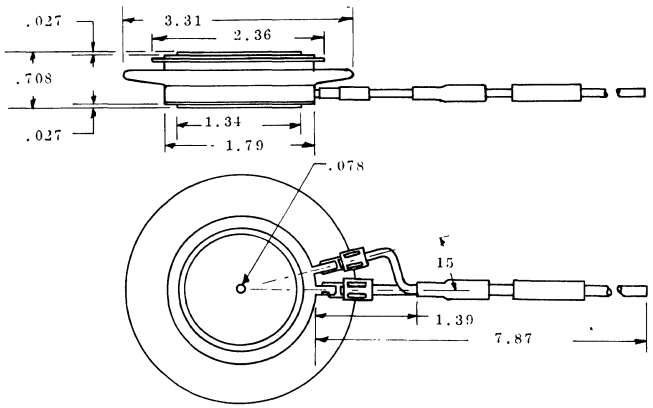

M408

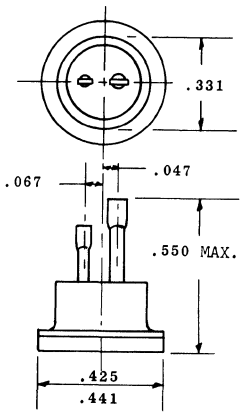

M409

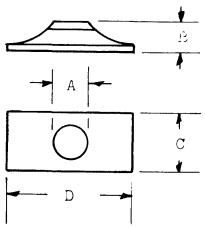

	A	B	C	D
M409	.006	.005	.013	.015
M409a	.009	.005	.017	.019
M409b	.015	.007	.022	.026

M410

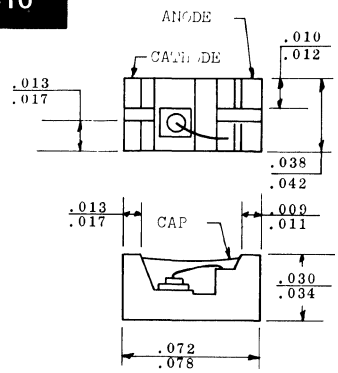

M411

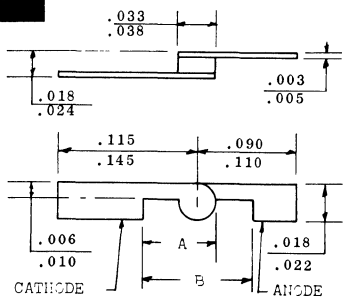

	A	B	
M411		.115	
M411a	.074		Delete Anode Lead

M412

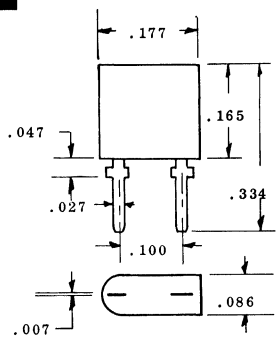

M413

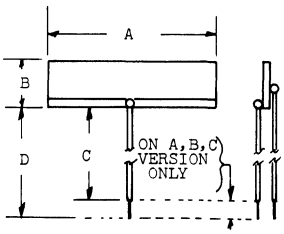

	A	B	C	D
M413	.496	.244	.95	
M413a	.787	.393	1.37	1.57
M413b	.393	.393		1.96
M413c	.244	.244		2.95

M414

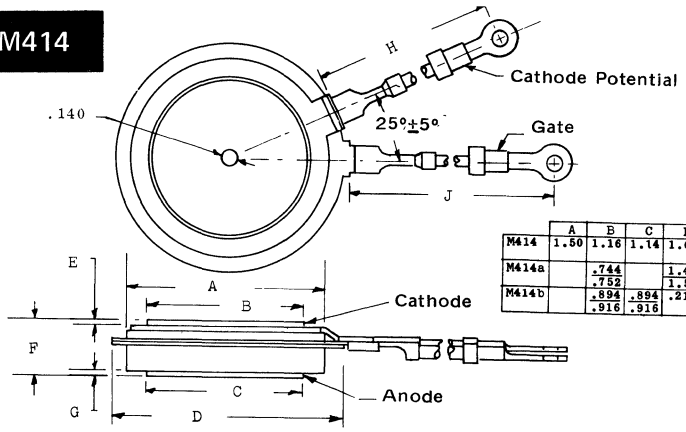

	A	B	C	D	E	F	G	H	J
M414	1.50	1.16	1.14	1.62	.020 MIN	.510 .555	.020 MIN	8.01 8.09	8.01 8.09
M414a		.744 .752		1.43 1.50	.035 .090	.500 .550	.186 .191		
M414b		.894 .916	.894 .916	.212	.059	.531	.059		

15. OUTLINE DRAWINGS

IN DRAWING NUMBER SEQUENCE

M417

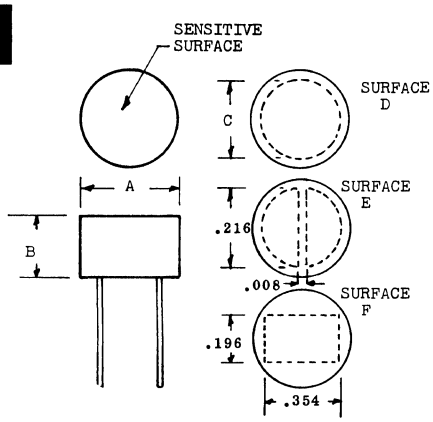

	A	B	C	SURFACE
M417	.299	.287		E
M417a	.196	.196	.165	D
M417b	.551	.236	.354	D
M417c	.196	.196		E
M417d	.551	.236		F
M417e	.299	.287	.196	D
M417f	1.75	.410	1.31	D
M417g	2.00	.440	1.50	D

M418

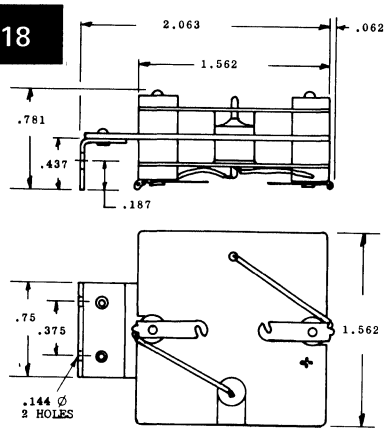

M419

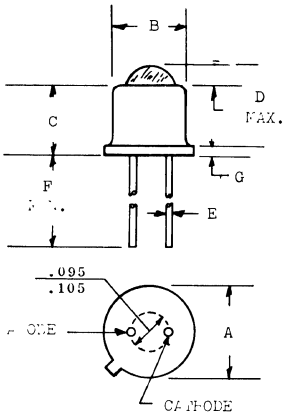

	A	B	C	D	E	F	G	LENS
M419	.205 .220	.180 .190	.135 .150	.060	.017 .019	1.40		CONVEX
M419a	.205 .235	.170 .200	.175 .225	.025 .075	.012 .018	1.45	.010 .040	CONVEX
M419b	.209 .230	.178 .195	.180 .210	.020 .040	.016 .019	.500		CONVEX
M419c	.209 .230	.178 .195	.180 .210	NA	.016 .019	.500		FLAT
M419d	.209 .230	.178 .195	.180 .210	.010 MIN	.016 .019	.500		CONVEX

M420

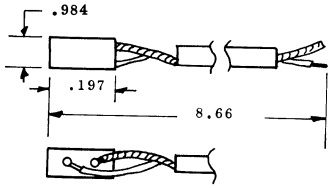

M421

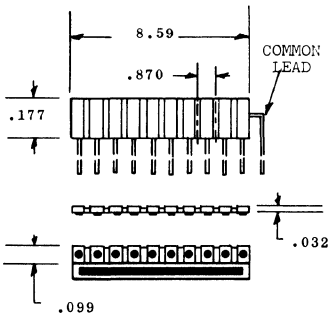

M422

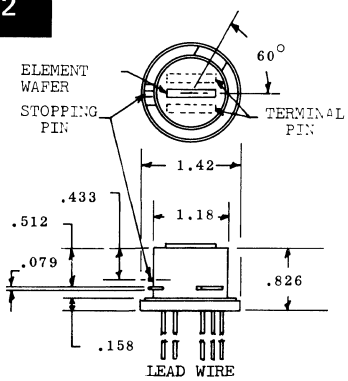

M423

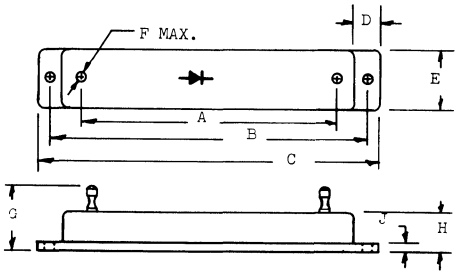

	A	B	C	D	E	F	G	H	J
M423	5.11	6.29	6.69	.393	.629	.165	.984	.590	.157
M423a	3.34	4.52	4.92	.393	.905	.165	1.18	.708	.157
M423b	5.70	6.88	7.28		.905	.165	1.18	.708	.157

M424

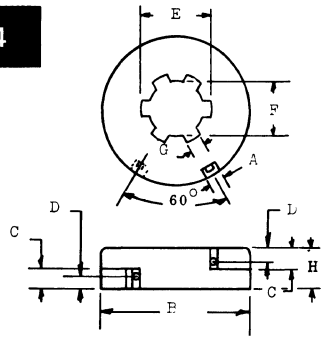

	A	B	C	D	E	F	G	H
M424	.275	3.90	.393	.236				
M424a	.275	3.14	.393		1.41	1.18	.326	.629

M425

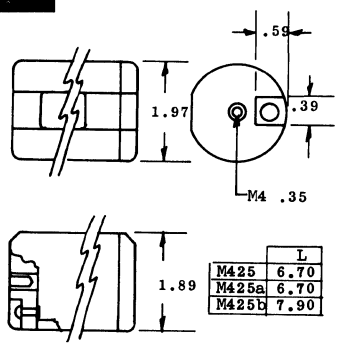

	L
M425	6.70
M425a	6.70
M425b	7.90

M426

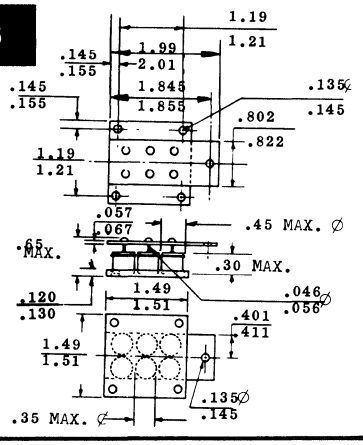

15. OUTLINE DRAWINGS

IN DRAWING NUMBER SEQUENCE

M427

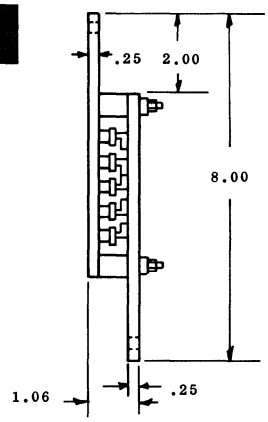

M428

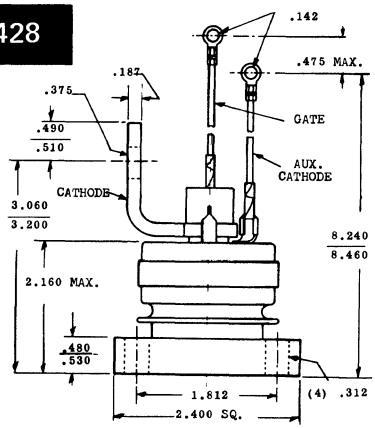

M429

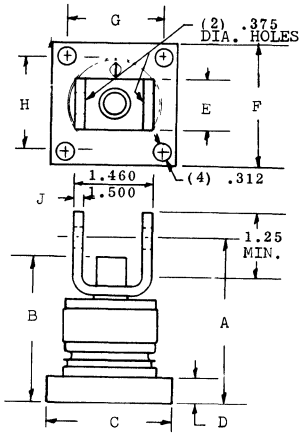

	A	B	C	D	E	F
M429	3.375	2.837	2.40	.530	1.05	
M429a	3.858	3.307	3.019	.629	1.051	3.019

	G	H	J
M429	1.812	1.812	.187
M429a			.196

M430

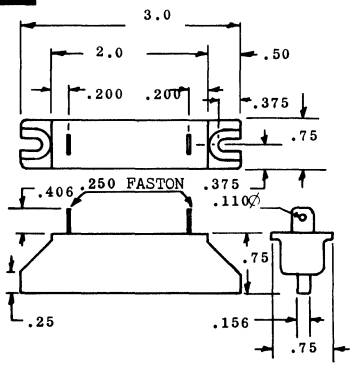

M431

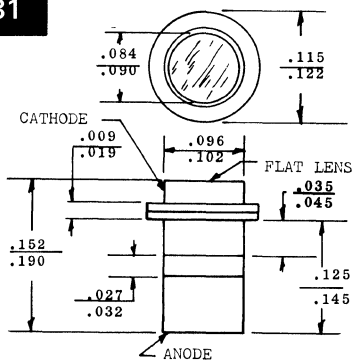

M432

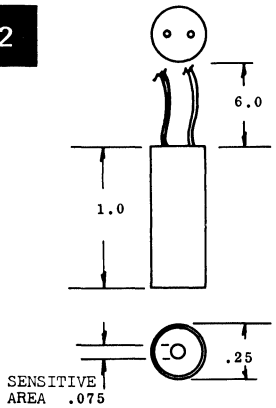

M433

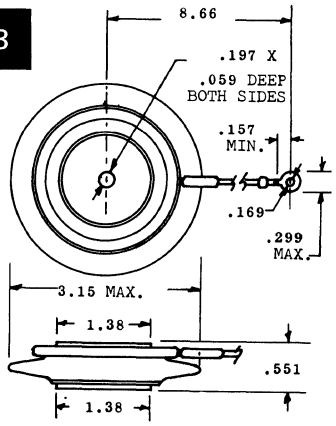

M434

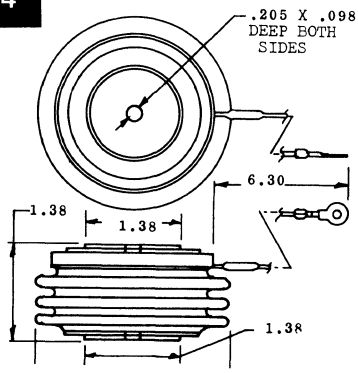

M436

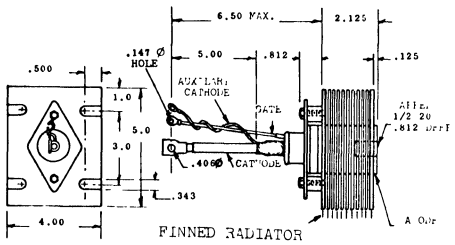

M437

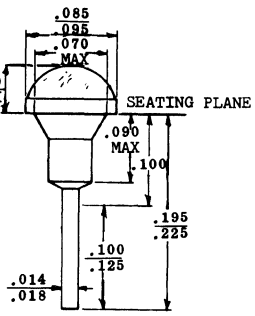

M438

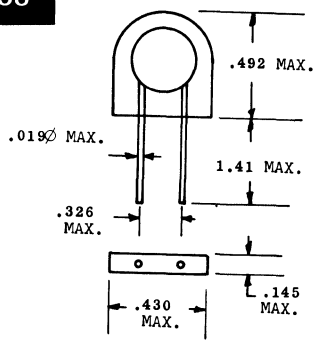

15. OUTLINE DRAWINGS

IN DRAWING NUMBER SEQUENCE

M439

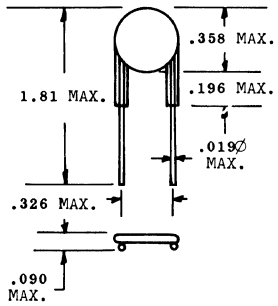

M440

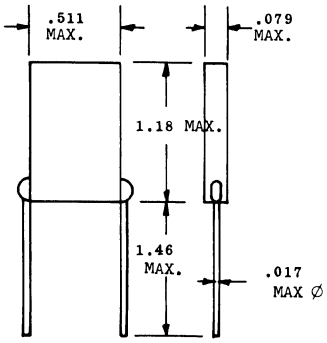

M441

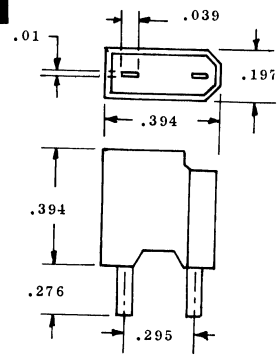

M443

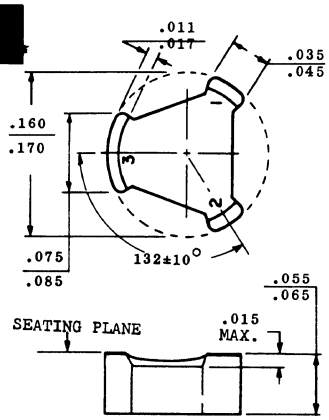

M444

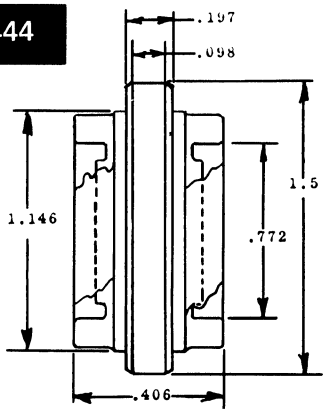

M445

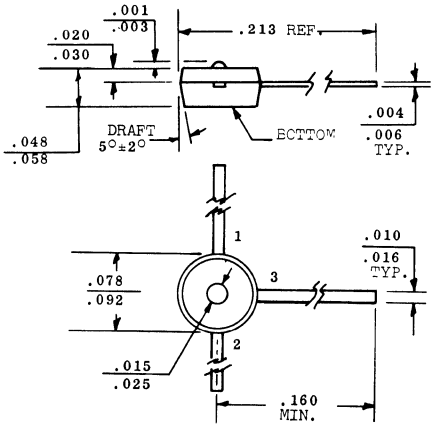

	1	2	3
M445	A	C	OMITTED
M445a	A2	C	A1
M445b	C2	A	C1
M445c	C	A/C	A

M446

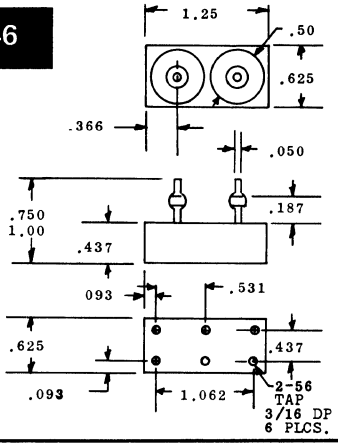

M447

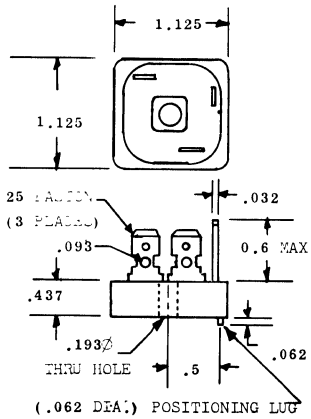

M448

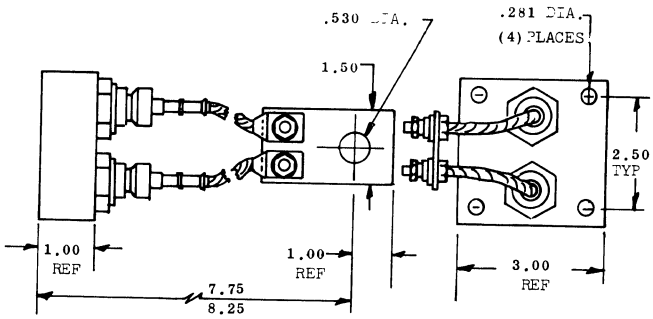

M451

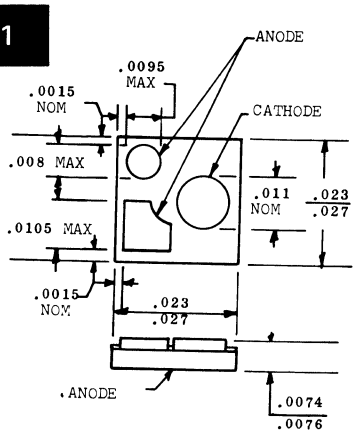

M452

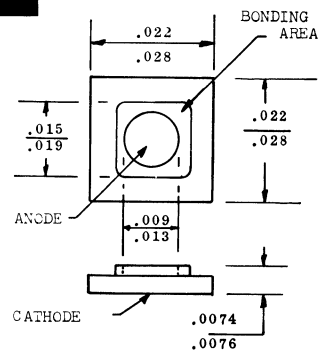

M453

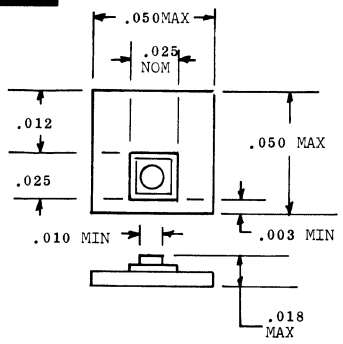

M454

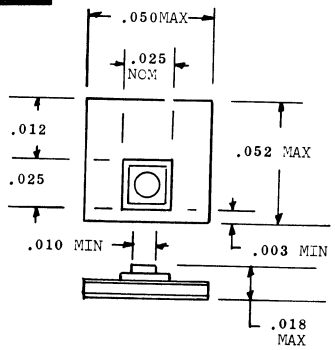

M455

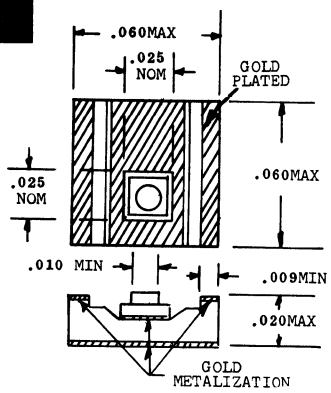

M456

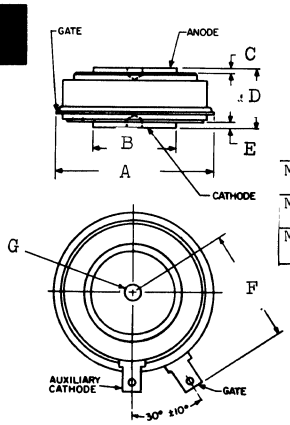

	A	B	C	D	E	F	G
M456	1.550 1.620	.744 .752	.019 .075	.500 .624	.019 .075	1.015 MAX	.140±.004dia.x .075±.008deep.
M456a	1.620 MAX	1.000 TYP	.020 .030	.510 .555	.020 .030	1.117	.140±.005dia.x .095±.01deep
M456b	2.125		.188	1.069 MAX	.165 MIN		.128dia.x.135 deep typ.

M457

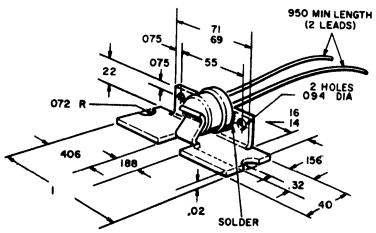

M458

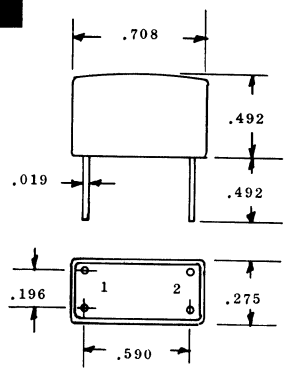

M459

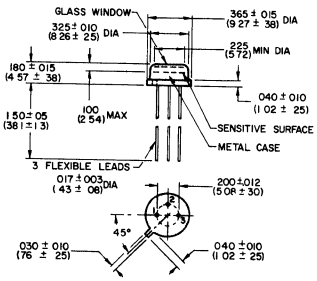

M460

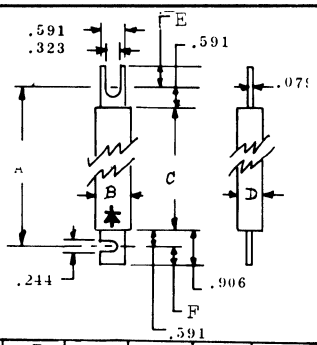

	A	B	C	D	E	F
M460	12.6	.984	11.4	.984	.215	.215
M460a		2.17	11.8	1.26	.215	.215
M460b		2.17	19.7	1.26	.215	.215
M460c	6.26		5.07	.984	.315	.315

M461

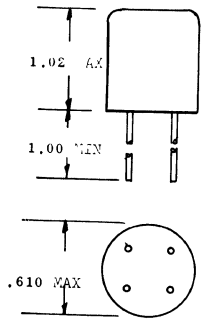

M462

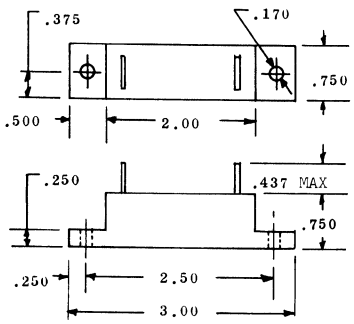

M463

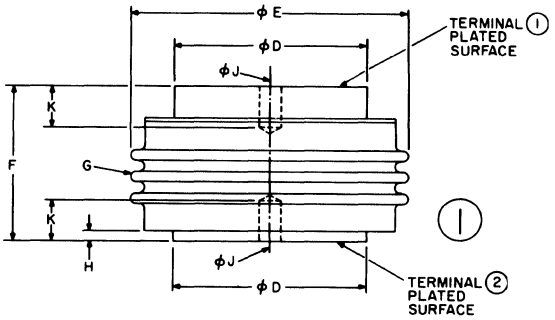

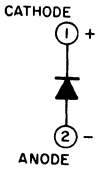

SYMBOL	INCHES MIN	INCHES MAX
ϕD	1.240	1 260
ϕE		1.875
F	1 000	1.040
G		
H	0.052	
ϕJ	0.136	0.146
K	0.220	0.280

M464

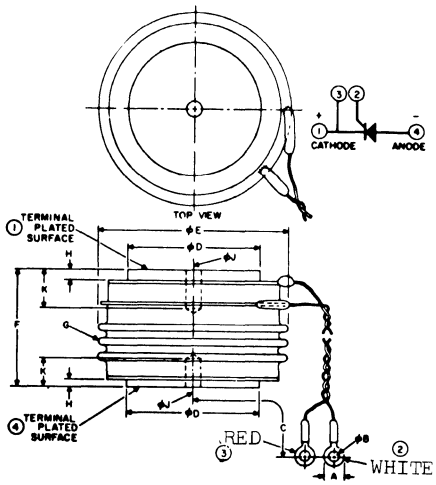

SYMBOL	INCHES MIN	INCHES MAX
A	0 200	0 240
ϕB	0 140	
C	16 000	20 000
ϕD	1 240	1 260
ϕE		1 875
F	1 000	1 040
G		
H	.052	
ϕJ	0.136	0 146
K	0.220	0.280

M465

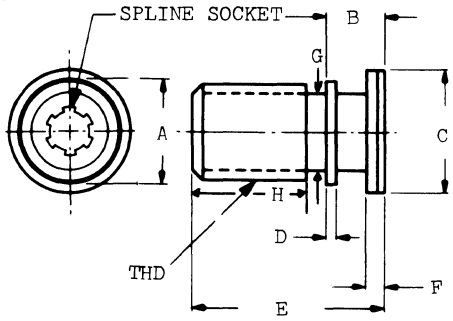

	A	B	C	D	E	F	G	H	THD
M465	.100	.054 .066	.118 .126	.009 .011	.183 .203	.014 .022			3-48UNC-2A
M465a	.193 .199	.118 .134	.259 .267	.091 .101	.446	.027 .033	.207 .213	.317 .323	8-32UNF-2A

M466

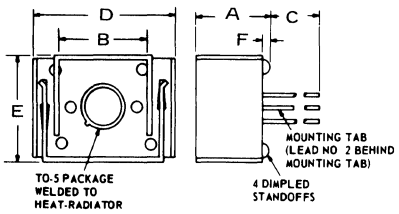

	A	B	C	D	E	F
M466	.630	.745	.885	1.20	.875	.040
	MAX	.755	MIN	1.23	.905	.055
M466a	.630	.755	.920	1.20	.875	.040
	MAX	.785	MIN	1.23	.905	.055

M467

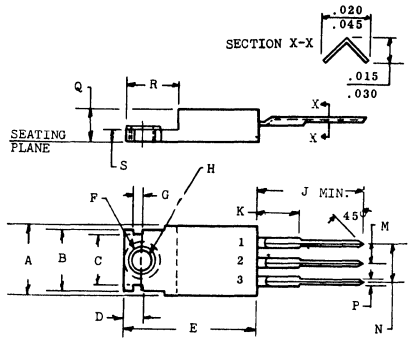

	A	B	C	D	E	F	G	H	J	K	M	N	P	Q	R	S
M467	.395 .410	.365 .385	.300 .320	.100 .120	.575 .600	.141 .145	.040 .060	.115 .121	.500 MIN	.250 MAX	.095 .105	.190 .210	.045 .055	.160 .190	.235 .265	.020 .055

M468

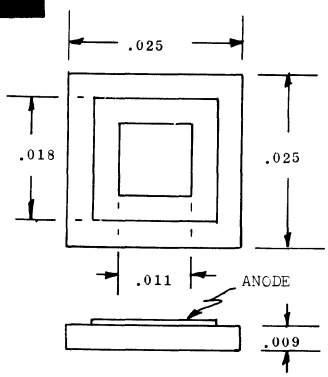

M469

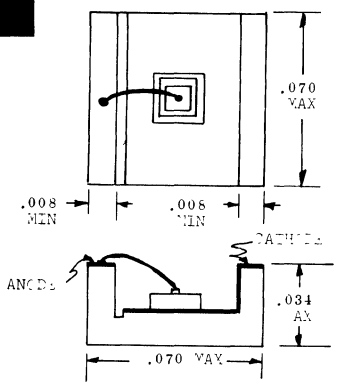

M470

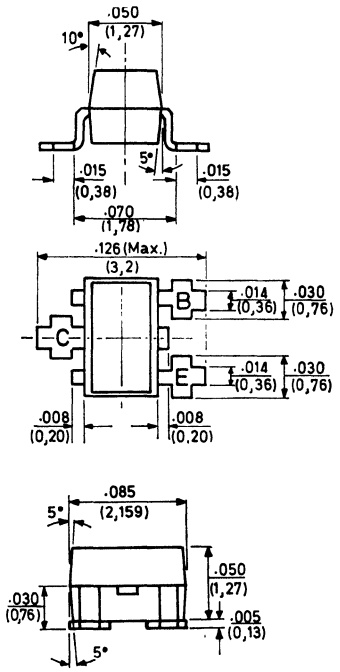

M471

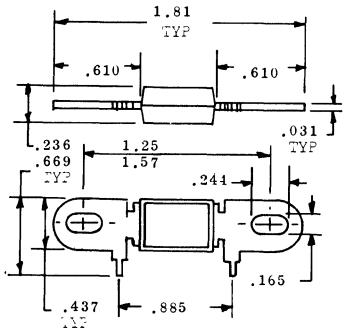

M475

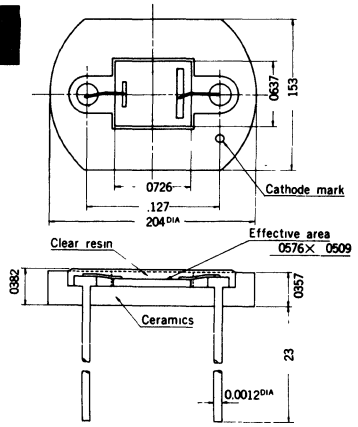

M476

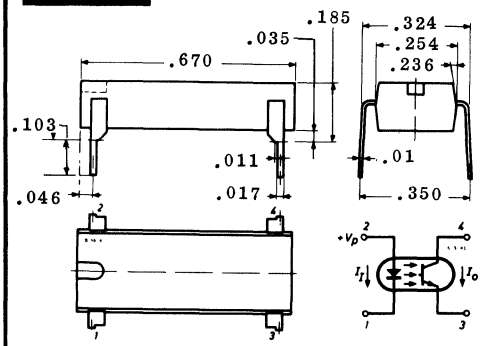

M477

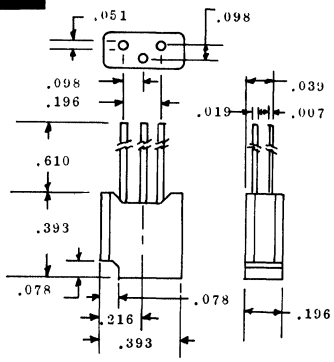

M478

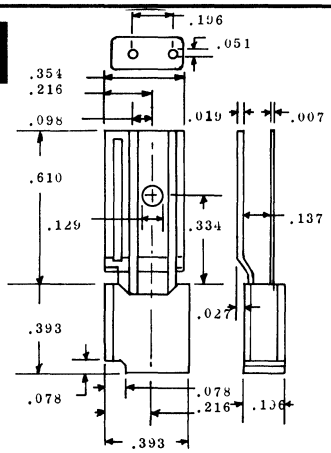

M479

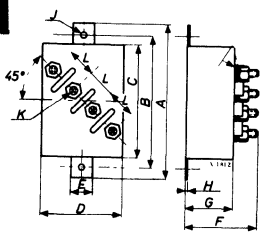

	A	B	C	D	E
M479	3.85	3.26	2.79	2.04	.551
M479a	5.70	5.11	4.33	3.14	.787

	F	G	H	J	K	L
M479	1.77	1.18	.059	.177	.196	.708
M479a	2.36	1.57	.078	.255	.236	.866

M480

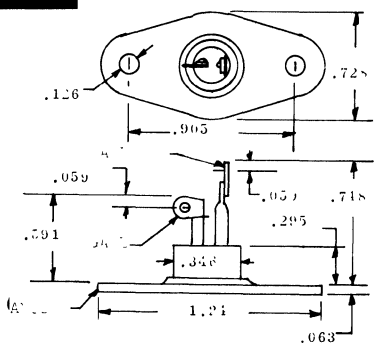

M481

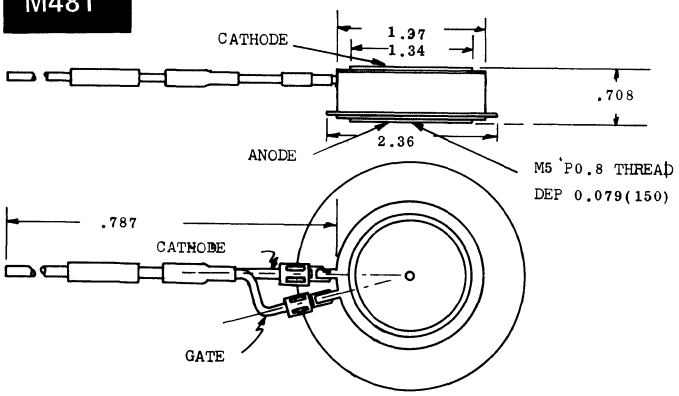

M482

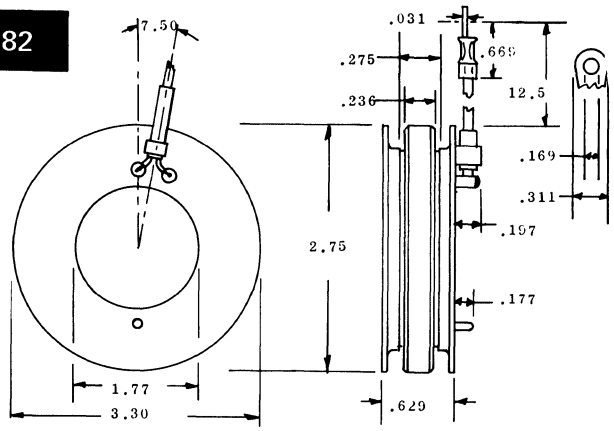

15. OUTLINE DRAWINGS

IN DRAWING NUMBER SEQUENCE

M483

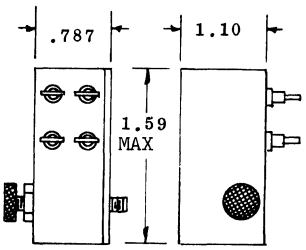

M484

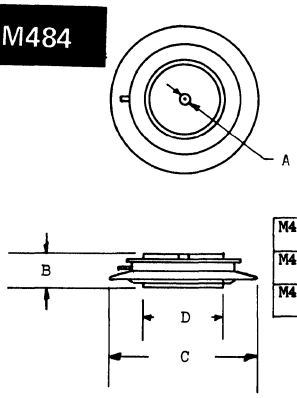

	A	B	C	D
M484	.137	.570 .610	3.14	1.49
M484a	.078 .196	.532 .570	2.75 MAX	1.18
M484b	.078 .196	.544 .558	3.14 MAX	1.37

M485

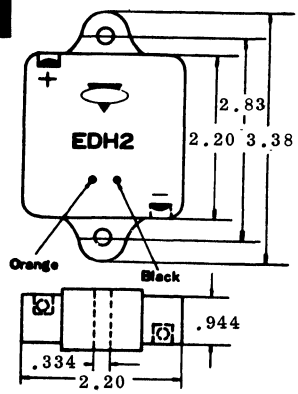

M486

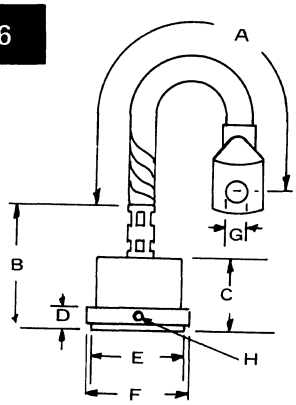

	A	B	C	D	E	F	G	H
M486	5.31	2.36	1.14	.393	1.57	1.73	.413	.125
M486a	7.40	2.59	1.22	.393	1.96	2.12	5.11	.125
M486b	7.28	2.91	1.79	.393	1.96	2.12	5.11	1.25

M487

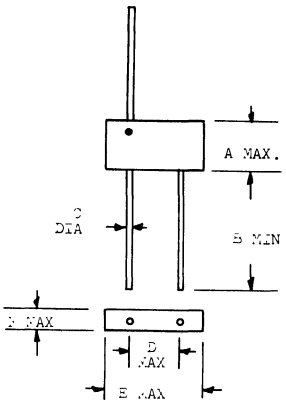

	A	B	C	D	E	F
M487	.452	.984	.031	.307	.511	.177
M487a	.511	.984	.031	.716	.913	.216

M488

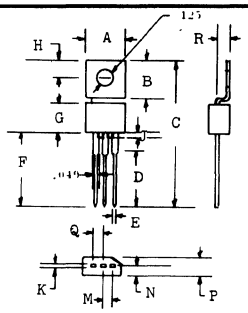

	A	B	C	D	E	F	G	H	J	K	M	N	P	Q	R
M488	.374 .413	.374 .415	1.25 1.33	.342	.027	.492 .531	.322	.196		.019	.100	.066	.157 .196	.100	.066
M488a	.393	.433	1.37	.354 MIN	.029	.472 MIN	.362	.216	.027		.098	.078	.177	.098	.062

M489

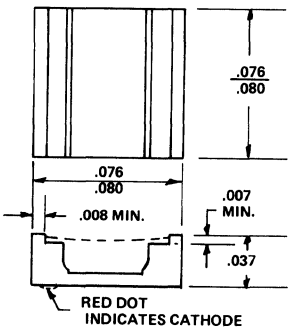

M490

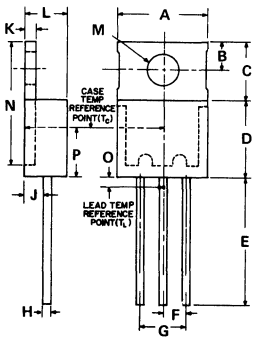

	A	B	C	D	E	F	G	H	J	K	L	M	N	O	P
M490	.395 .405	.110 .120	.250 .260	.340 .350	.545 .575	.095 .105	.190 .210	.029 .035	.085 .115	.050 .055	.175 .190	.141 .145	.540 .560	.065 MAX	.220 MAX

M491

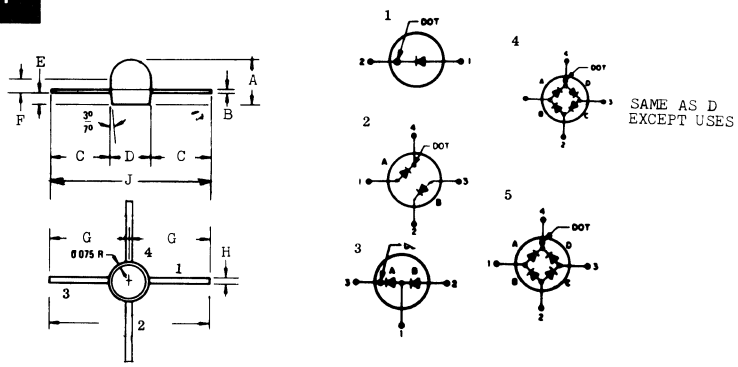

	A	B	C	D	E	F	G	H	J	REMARKS	TERMINAL CONNECTION
M491	.180 .210	.009 .011	.250 MIN	.250 MIN	.040 .050	.070 .080	.320 MIN	.013 .019	.640 MIN	OMIT LEAD 2,4	
M491a	.083 .100	.004 .006		.078 .092		.030 .040	.160	.010 .016	.320	OMIT LEAD 2,4	
M491b	.030 MAX	.003	.250	.100	.019 .021	.009 MAX	.300	.019 .021	.600	OMIT LEAD 2,4	1
M491c	.030 MAX	.003	.250	.100	.019 .021	.009 MAX	.300	.019 .021	.600	OMIT LEAD 4	2
M491d	.030 MAX	.003	.250	.100	.019 .021	.009 MAX	.300	.019 .021	.600		3
M491e	SAME AS D										4
M491f	SAME AS D										5

M492

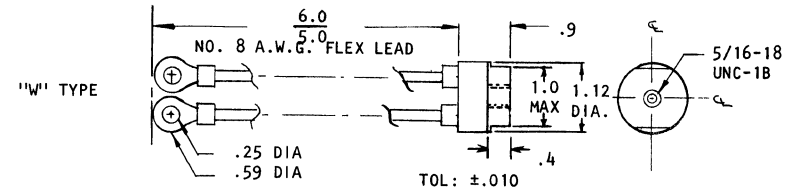

M493

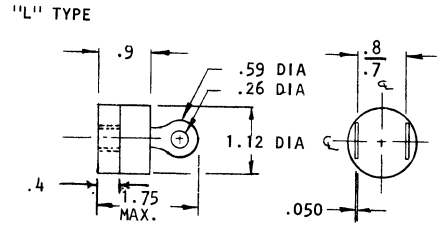

M494

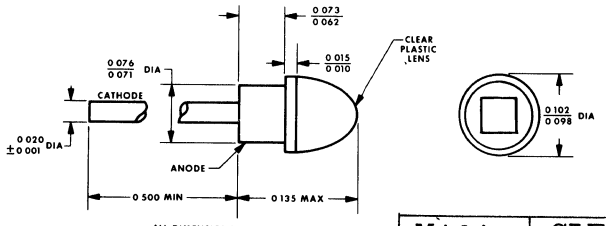

M494a	CLEAR LENS
M494b	RED LENS

M495

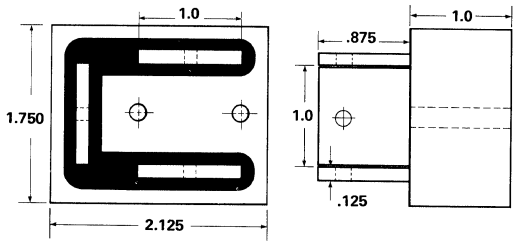

M496

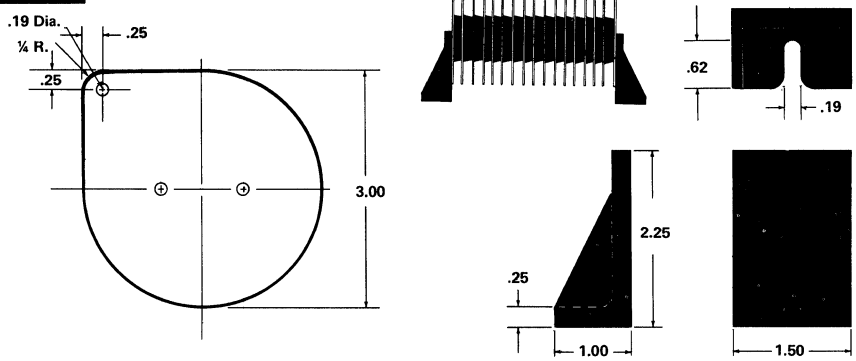

[redacted]

15. OUTLINE DRAWINGS

IN DRAWING NUMBER SEQUENCE

M497

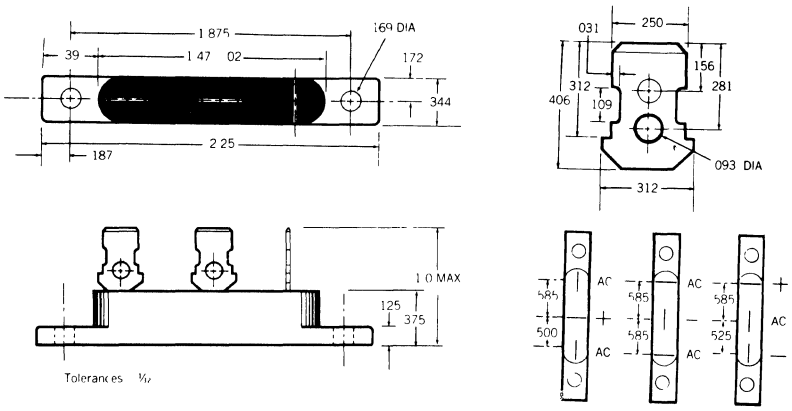

M498

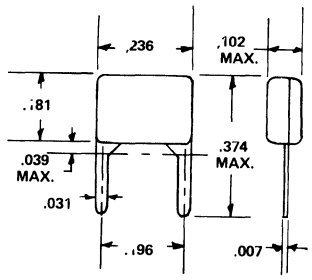

M499

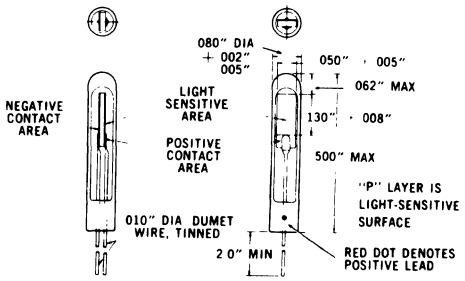

M500

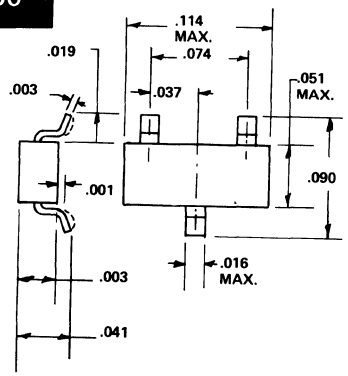

M501

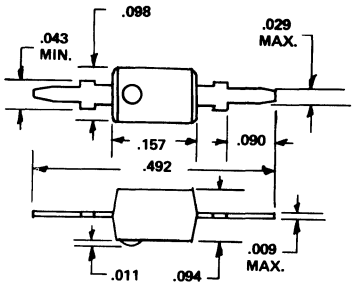

M502

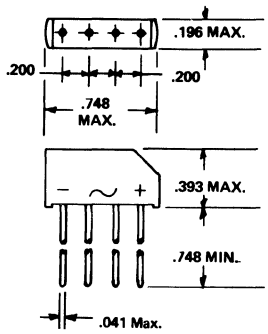

M503

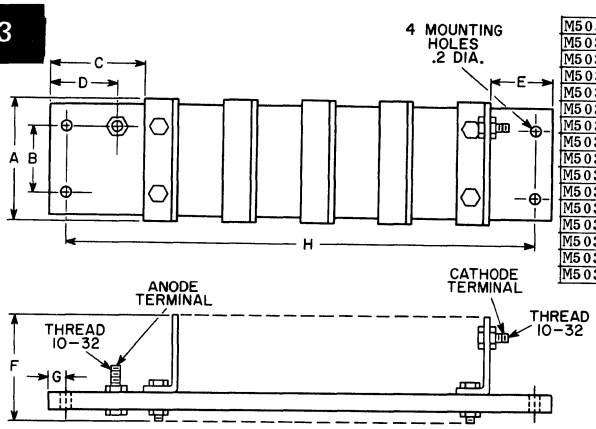

	A	B	C	D	E	F	G	H
M503	2.25	1.62	2.0	1.28	.94	2.0	.41	5.25
M503a	2.25	1.62	2.0	1.28	.94	2.0	.41	7.0
M503b	2.25	1.62	2.0	1.28	.94	2.0	.41	8.75
M503c	2.25	1.62	2.0	1.28	.94	2.0	.41	10.5
M503d	2.25	1.62	2.0	1.28	.94	2.0	.41	12.2
M503e	2.25	1.62	2.0	1.28	.94	2.0	.41	14.0
M503f	2.25	1.62	2.0	1.28	.94	2.0	.41	15.7
M503g	3.00	1.87	2.75	1.78	1.37	3.78	.56	7.12
M503h	3.00	1.87	2.75	1.78	1.37	3.78	.56	9.5
M503i	3.00	1.87	2.75	1.78	1.37	3.78	.56	11.8
M503j	3.00	1.87	2.75	1.78	1.37	3.78	.56	14.2
M503k	3.00	1.87	2.75	1.78	1.37	3.78	.56	16.6
M503l	5.5	4.0	3.0	1.9	1.5	5.37	.62	7.7
M503m	5.5	4.0	3.0	1.9	1.5	5.37	.62	10.2
M503n	5.5	4.0	3.0	1.9	1.5	5.37	.62	12.8
M503o	5.5	4.0	3.0	1.9	1.5	5.37	.62	15.4

M504

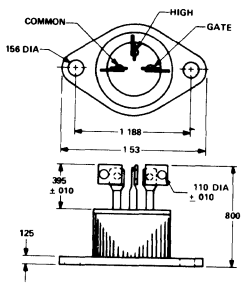

M505

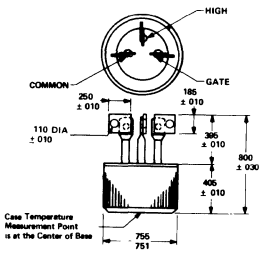

M506

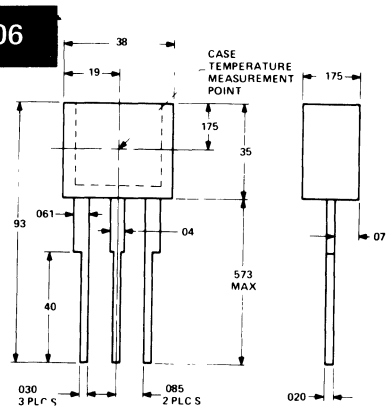

15. OUTLINE DRAWINGS

IN DRAWING NUMBER SEQUENCE

M507

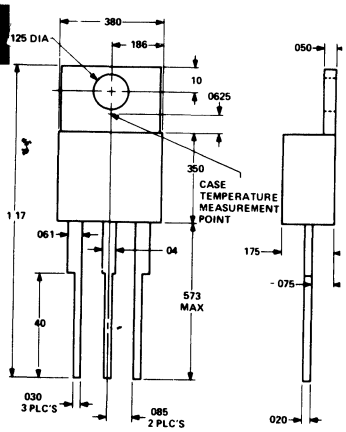

M508

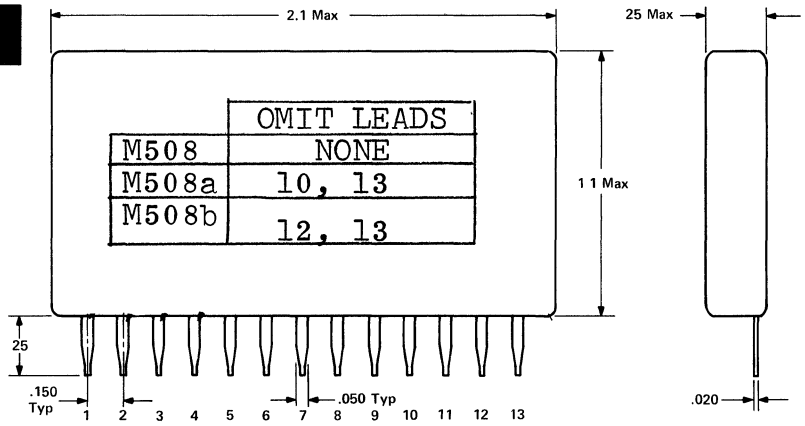

	OMIT LEADS
M508	NONE
M508a	10, 13
M508b	12, 13

M509

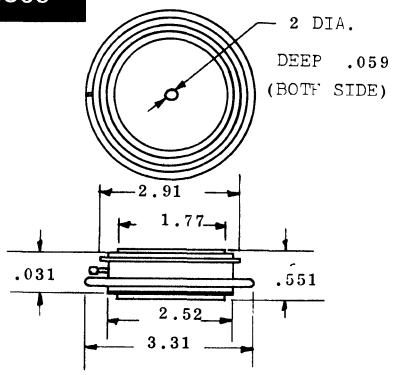

M510

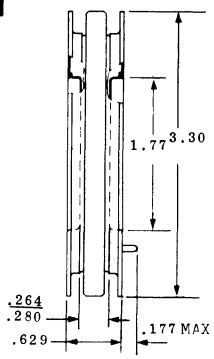

M512

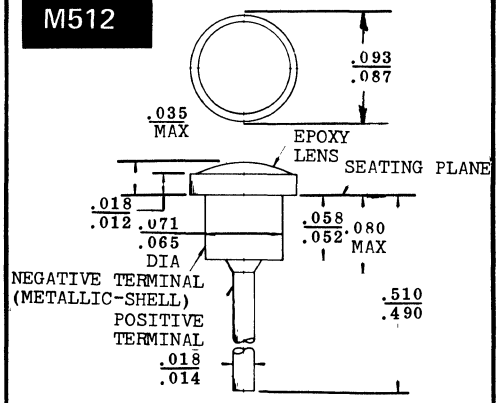

M513

	A
M513	7.23
M513a	8.07
M513b	9.17
M513c	10.1

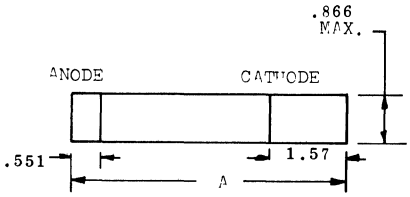

M514

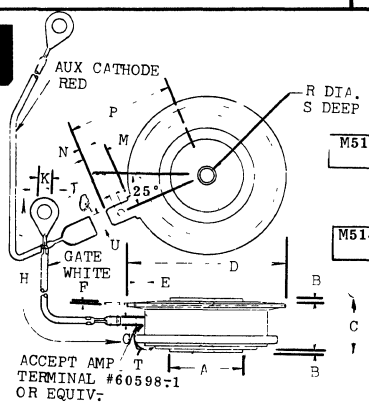

	A	B	C	D	E	F	G	H	J
M514	.744	.030	.515	1.60	.110	.013	.057	12.2	.300
	.752	.060	.565	1.65	MIN	.017	.059	12.3	MAX

	K	M	N	P	Q	R	S	T	U
M514	.137	.245	.120	1.09	.065	.135	.067	.340	.186
	.153	.260	.140	1.12	.070	.145	.083	MIN	.189

M515

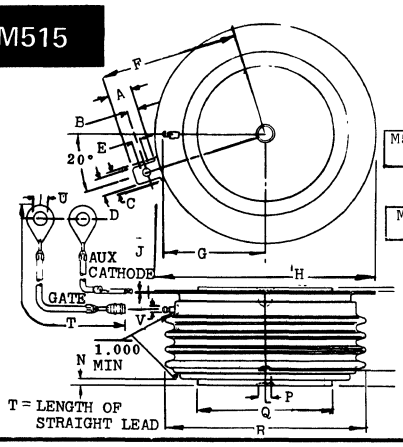

	A	B	C	D	E	F	G	H	J	K
M515	.245	.115	.245	.186	.064	1.42	1.06	2.24	.013	.070
	.255	.130	MIN	.191	.070	MAX	MAX	2.30	.019	.110

	M	N	P	Q	R	S	T	U	V
M515	1.02	.030	.135	1.04	2.1	.140	12.2	.137	.057
	1.06	.096	.143	1.05	MAX	.160	12.3	.153	.059

15. OUTLINE DRAWINGS

IN DRAWING NUMBER SEQUENCE

M516

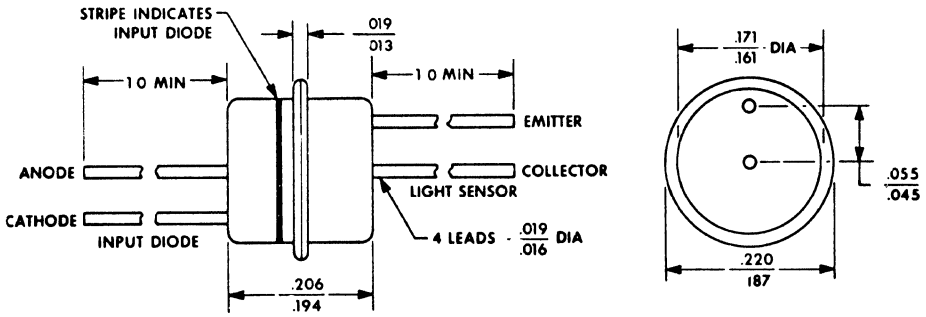

M517

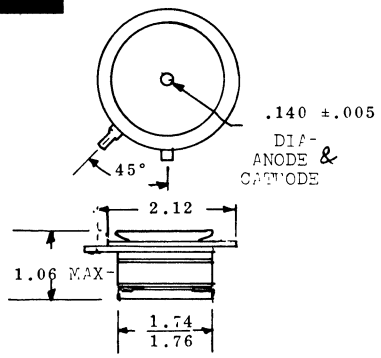

M519

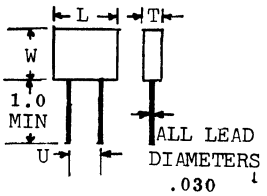

	W	L	T	U
M519	.500	.525	.215	.300
M519a	.500	.750	.215	.600
M519b	.500	1.20	.215	1.00
M519c	.500	1.50	.215	1.30
M519d	.500	2.50	.215	2.30

M520

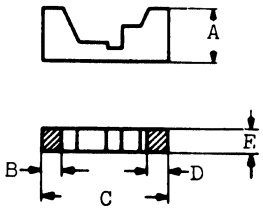

	A	B	C	D	E
M520	.031	.011 MIN	.074	.011 MIN	.014
M520a	.032 / .036	.012 MIN	.092 / .098	.009 MIN	.065 / .069
M520b	.028 / .035	.012	.307 / .311	.009	.038 / .042

M521

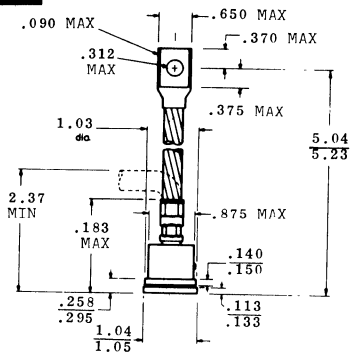

M522

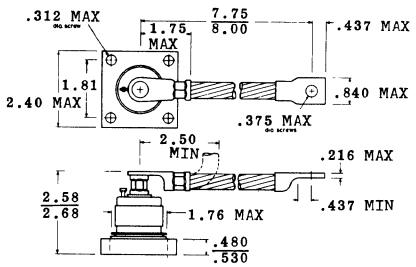

M523

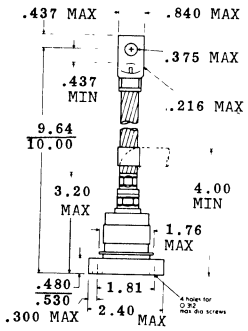

M524

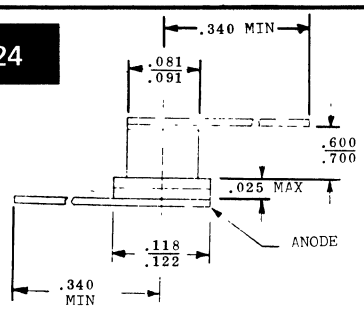

	A	B	C	D	E	F	G	H
M524	.081 / .091	.340 MIN	.600 / .700	.025 MAX	.118 / .122	.340 MIN		
M524a	.075 / .085		.072 MAX	.025 MAX	.117 / .123		1.25 MAX	1.25 MAX

M525

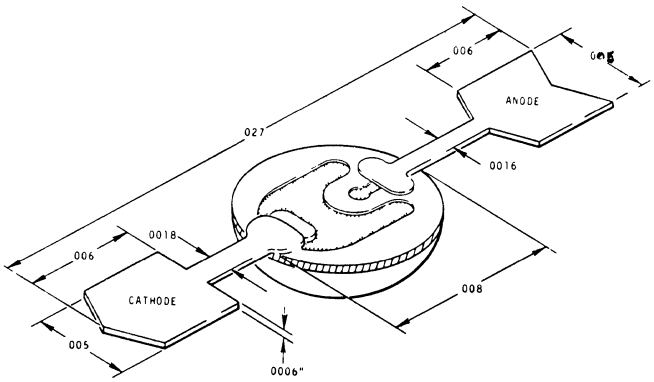

M526

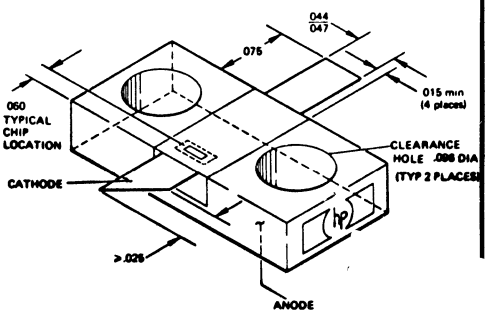

15. OUTLINE DRAWINGS

IN DRAWING NUMBER SEQUENCE

M527

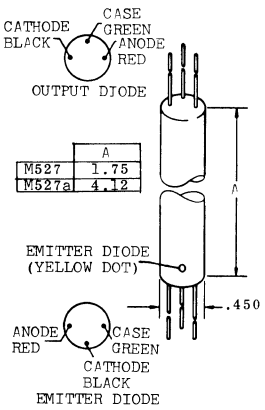

	A
M527	1.75
M527a	4.12

M528

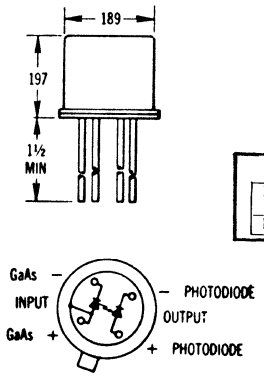

M529

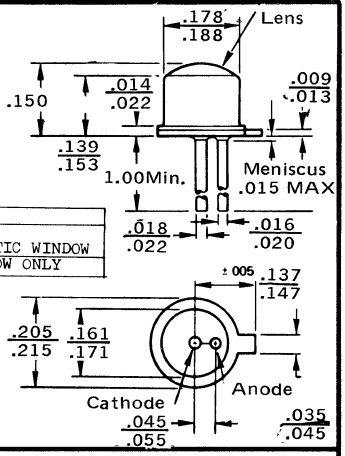

	LENS
M529	RED EPOXY LENS OVER GLASS HERMETIC WINDOW
M529a	CLEAR GLASS WINDOW ONLY

M530

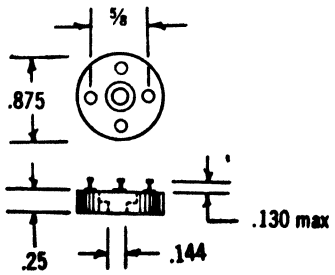

M531

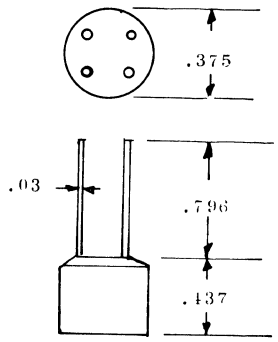

M532

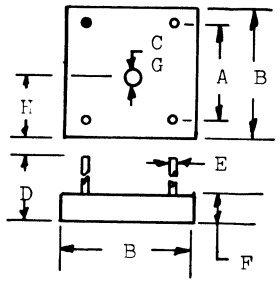

	A	B	C	D	E	F	G	H
M532	.500 TYP	.750	.120	1.00	.030	.250		
M532a	.425 TYP	.600	.167 / .137	1.00 MIN	.043 / .037	.200	.167 / .137	.300 TYP

M533

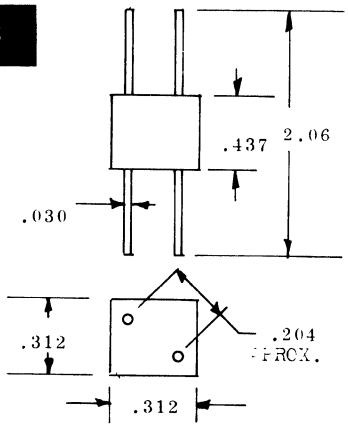

M534

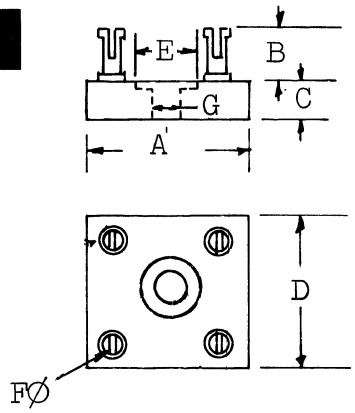

	A	B	C	D	E	F	G
M534	.750	.250	.250	.750	.120		NA
M534a	.661 MAX	.187	.389 MAX	.661 MAX	.328	.102 MAX	.203
M534b	1.40 MAX	.250	.562 MAX	1.40 MAX	.437	.125	.203

M535

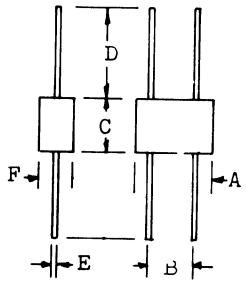

	A	B	C	D	E	F
M535	.529	.300	.463	.750	.030	.215
M535a	.265 MAX	.112	.265	.260 / .280	.030 MAX	.185 MAX

M536

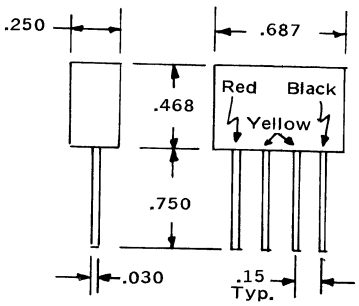

M537

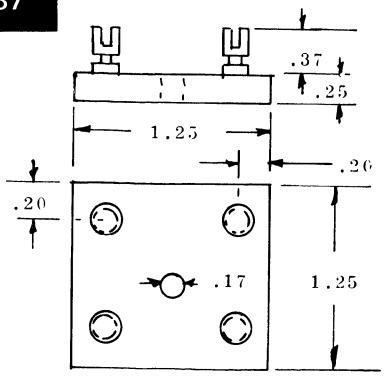

15. OUTLINE DRAWINGS

IN DRAWING NUMBER SEQUENCE

M538

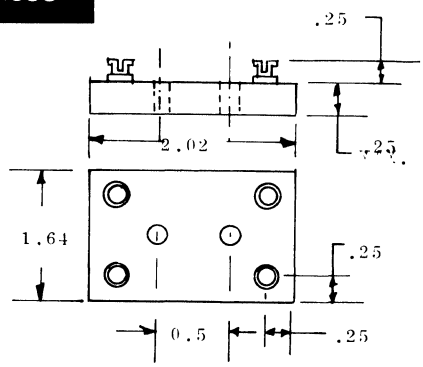

M539

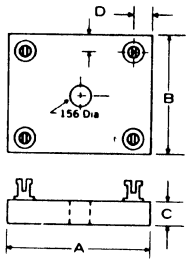

	A	B	C	D
M539	1.02	.960	.312	.125

M540

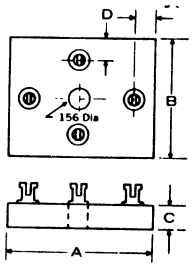

	A	B	C	D
M540	1.40	1.33	.312	.250
M540a	1.70	1.30	.312	.1250

M541

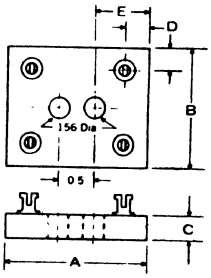

	A	B	C	D	E
M541	2.02	1.64	.312	.250	.760
M541a	2.20	2.00	.312	.375	.852
M541b	2.98	2.48	.312	.500	1.24

M542

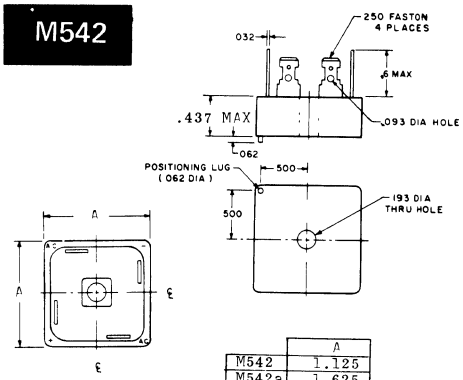

	A
M542	1.125
M542a	1.625 MAX

M543

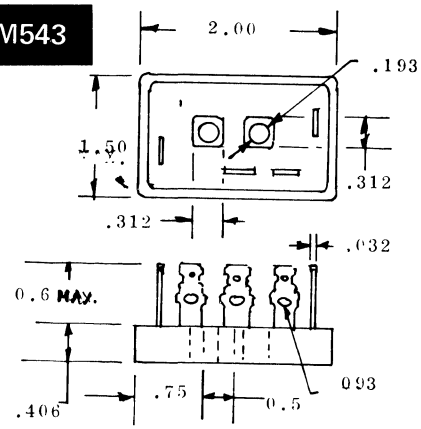

M544

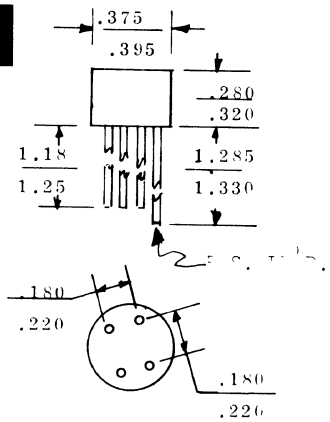

M545

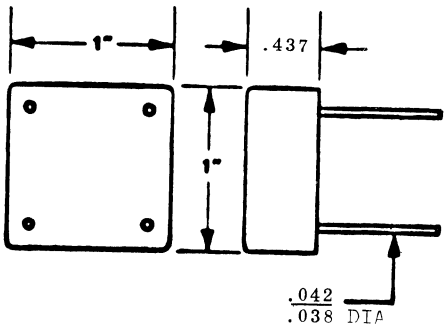

M546

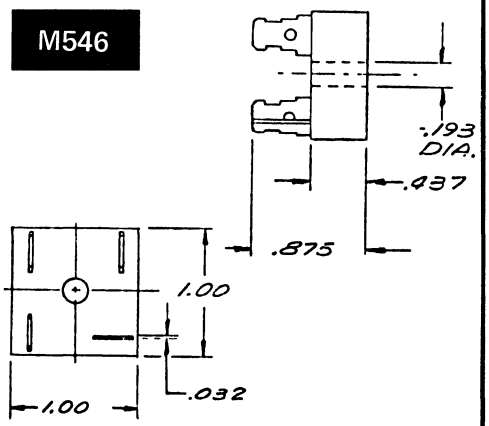

M547

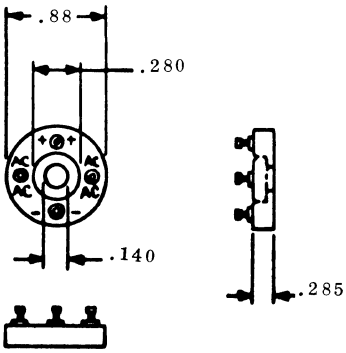

M548

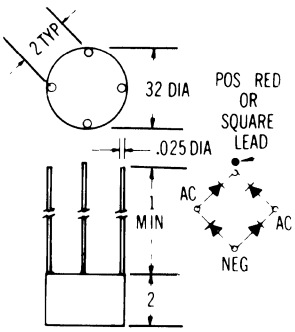

M549

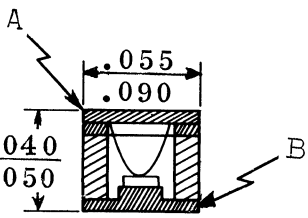

	A	B
M549	ANODE	CATHODE
M549a	CATHODE	ANODE

15. OUTLINE DRAWINGS

IN DRAWING NUMBER SEQUENCE

M550

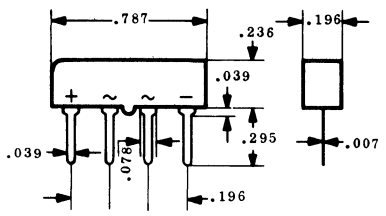

M551

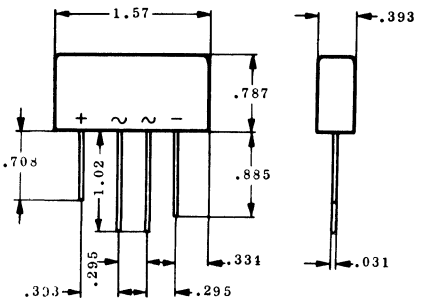

M552

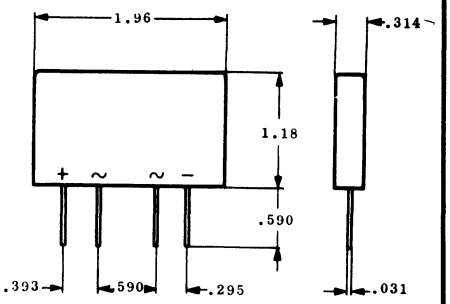

M553

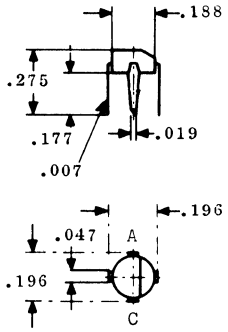

M554

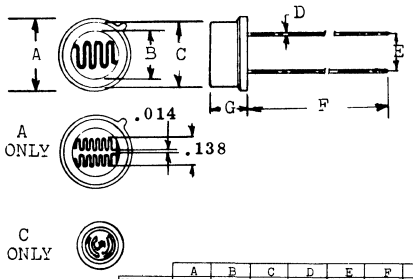

	A	B	C	D	E	F	G
M554,a	.355	.235	.320	.016	.195	1.50	.172
	.365	.245	.330	.019	.205	1.56	.183
M554b	.545	.425	.482	.014	.290	1.50	.190
	.555	.435	.490	.017	.300	1.53	.230
M554c	.205	.150	.178	.016	.095	1.50	.140
	.215	.160	.188	.019	.105	1.53	.154

M555

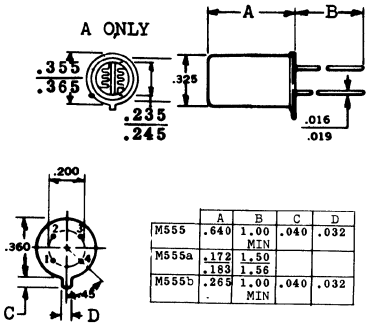

	A	B	C	D
M555	.640	1.00 MIN	.040	.032
M555a	.172 .183	1.50 1.56		
M555b	.265	1.00 MIN	.040	.032

M556

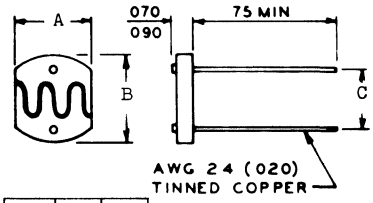

	A	B	C
M556	.300	.353	.255
	.320	.373	.275
M556a	.216	.256	.190
	.236	.276	.210
M556b	.144	.172	.090
	.164	.192	.110

M557

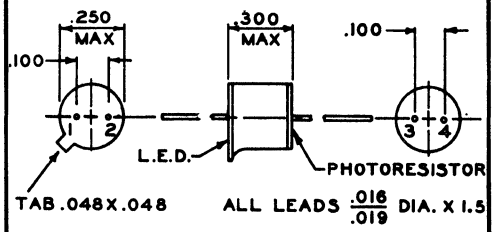

M558

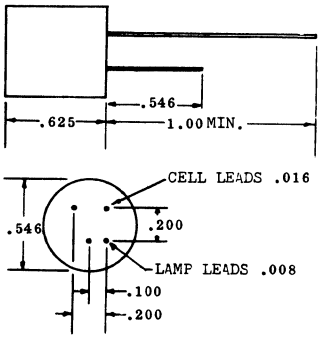

M559

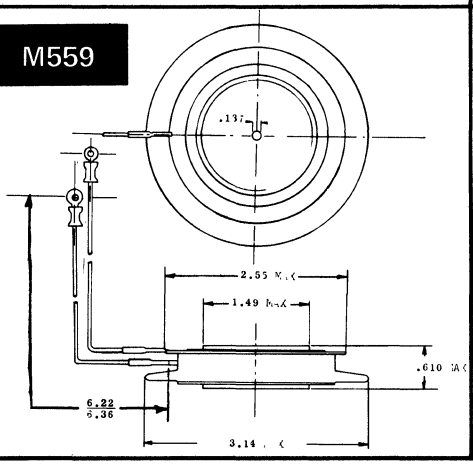

M560

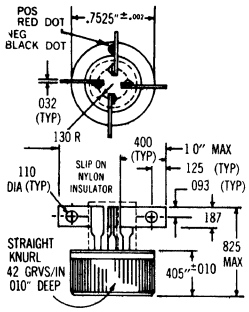

M562

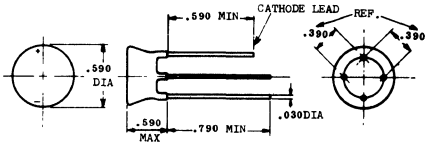

M563

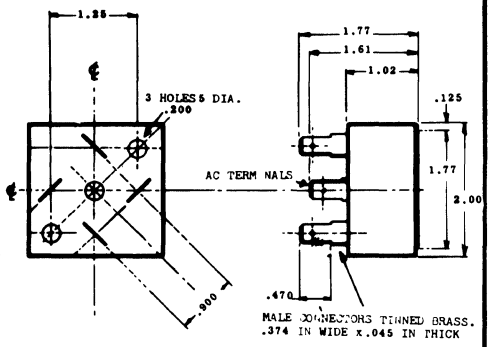

M564

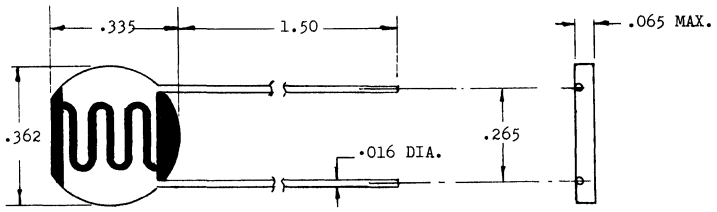

M565

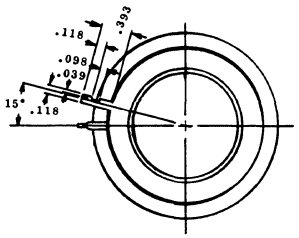

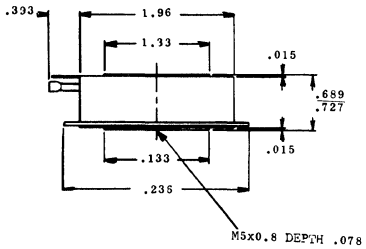

M566

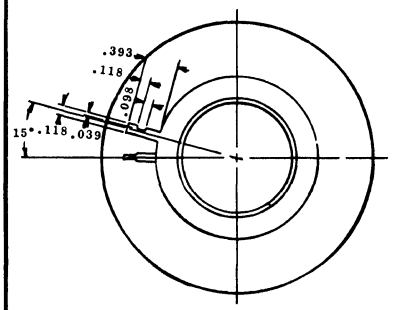

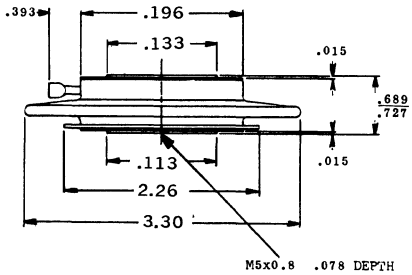

M567

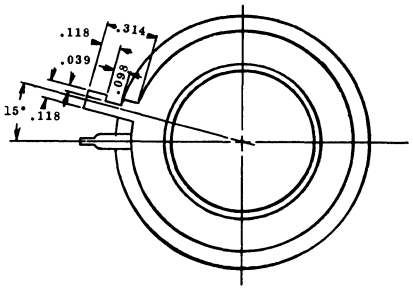

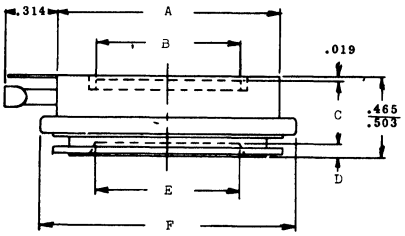

	A	B	C	D	E	F
M567	1.33	.866	.374 / .396	.078	.866	1.50
M567a	1.45	.984	.394 / .416	.059	.984	1.69

M568

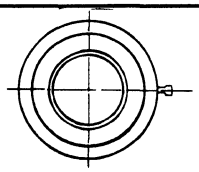

	A
M568	.099 / .121
M568a	.086

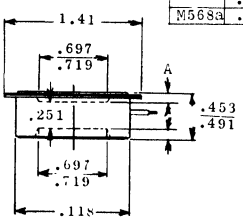

M569

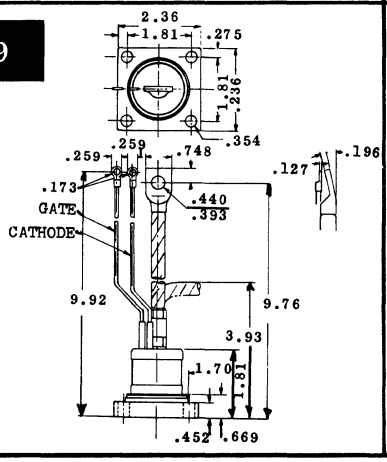

M570

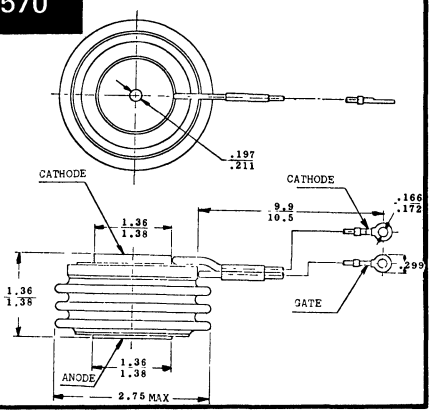

15. OUTLINE DRAWINGS

IN DRAWING NUMBER SEQUENCE

M571

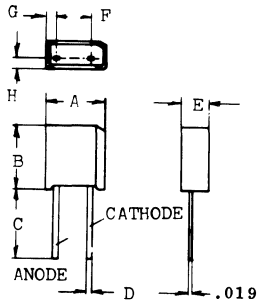

	A	B	C	D	E	F	G	H
M571	.511	.551	.590	.035	.236	.295	.086	.078
M571a	.389	.354	.452	.031	.196	.271	.059	.070

M572

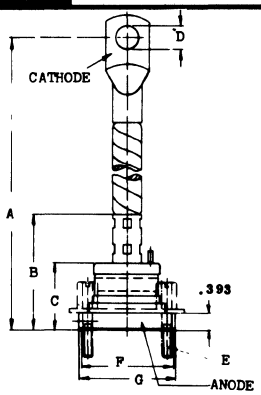

	A	B	C	D	E	F	G
M572	10.2	2.63	1.49	.511	M6x.984	1.96	2.12
M572a	7.67	2.36	1.37	.413	M5x.984	1.57	1.73

M573

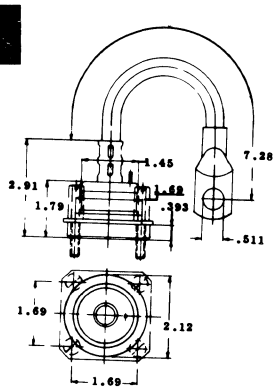

M574

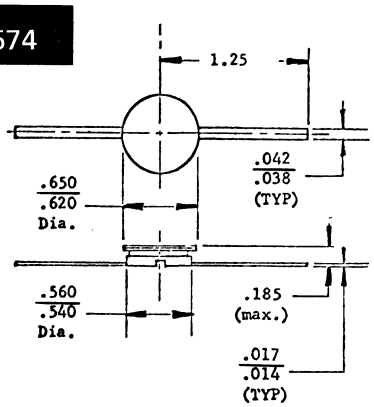

M575

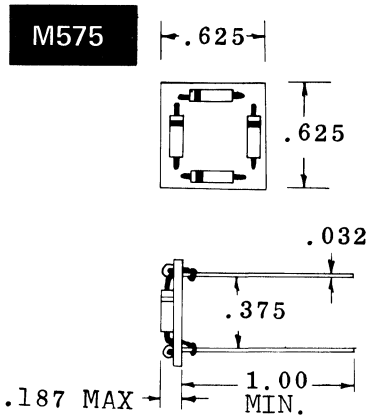

M576

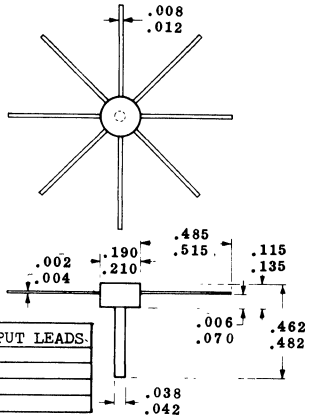

	NUMBER OF OUTPUT LEADS
M576	2
M576a	4
M576b	6
M576c	8

M577

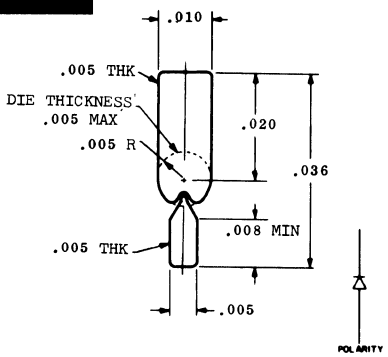

M578

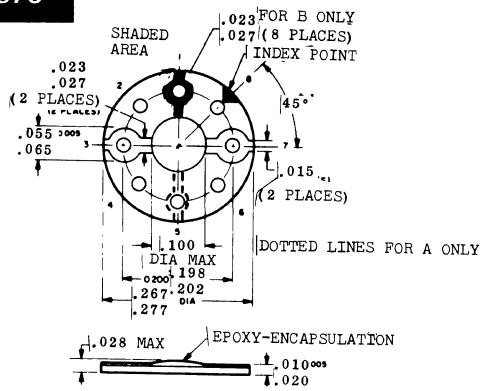

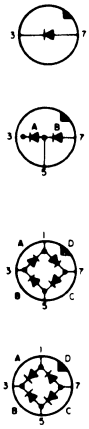

M579

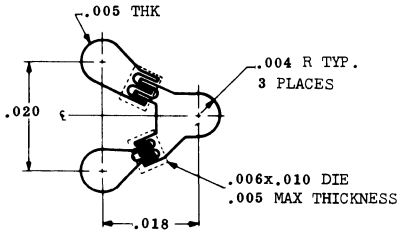

M580

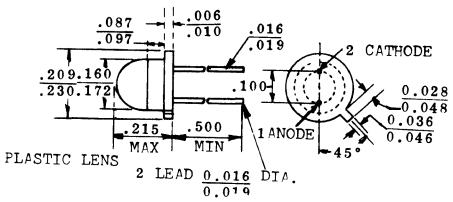

M580	CLEAR LENS
M580a	RED LENS

M581

M581	CLEAR LENS
M581a	RED LENS

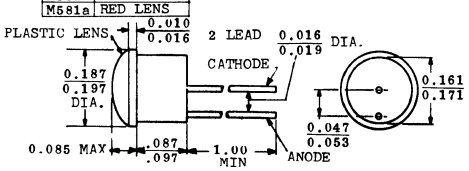

15. OUTLINE DRAWINGS

IN DRAWING NUMBER SEQUENCE

M582

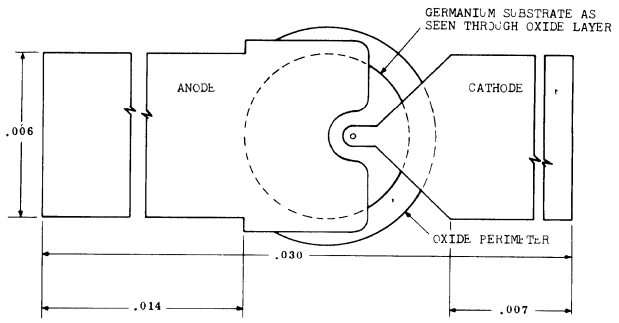

M583

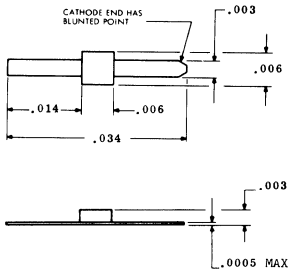

M584

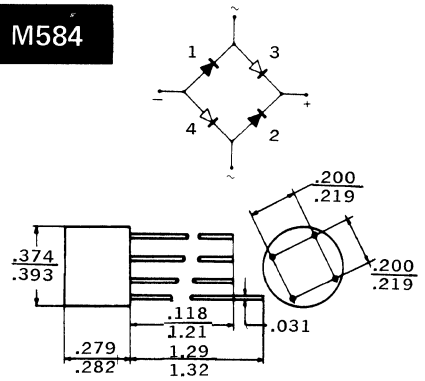

M585

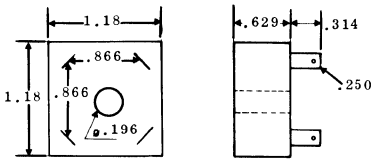

M586

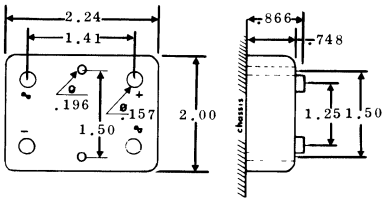

M587

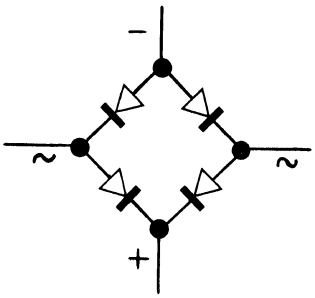

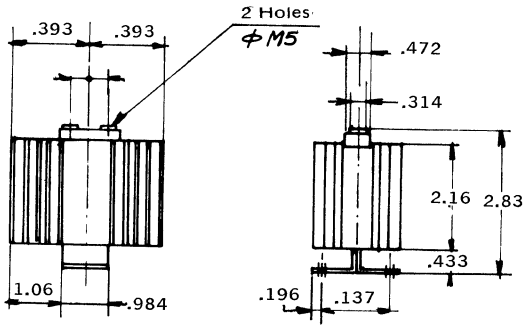

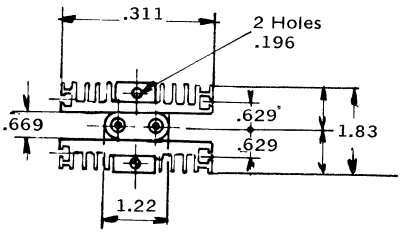

M588

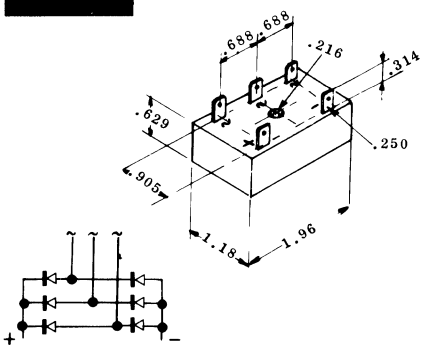

M589

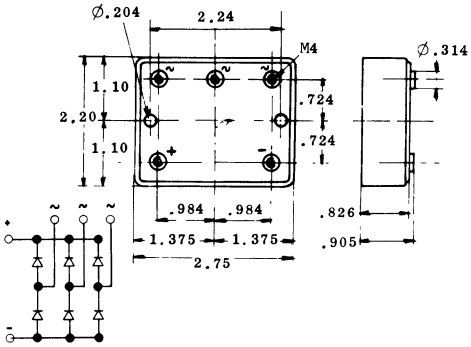

M590

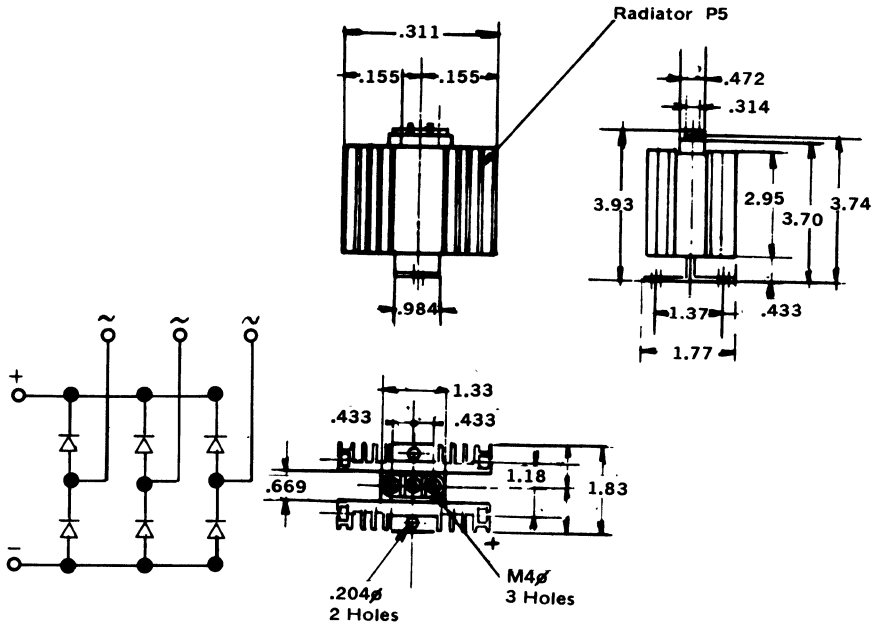

M591

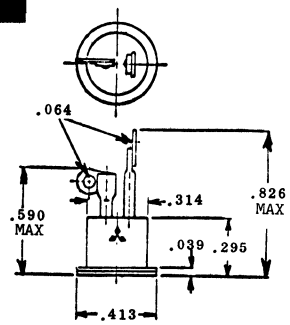

M592

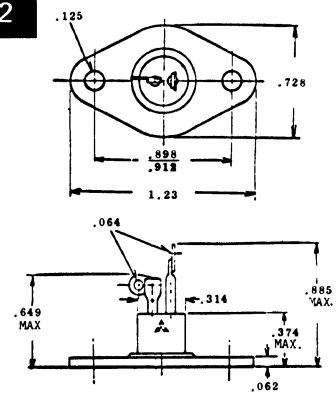

M593

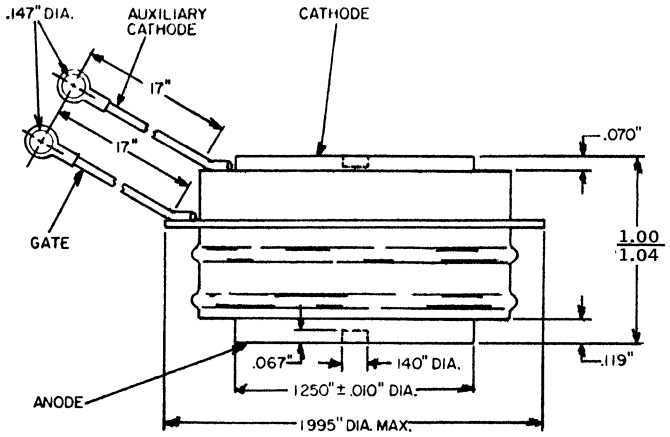

M594

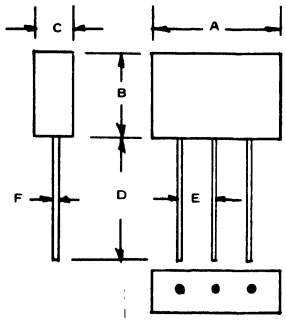

	A	B	C	D	E	F
M594,a,b	.500	.500	.250	1.50	.150	.032
M594c	.492 .531	.413 .452	.196 .236	.787 MIN	.145 .169	.039

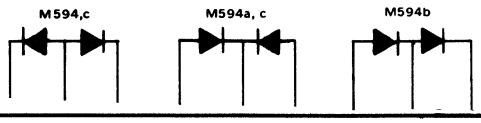

M595

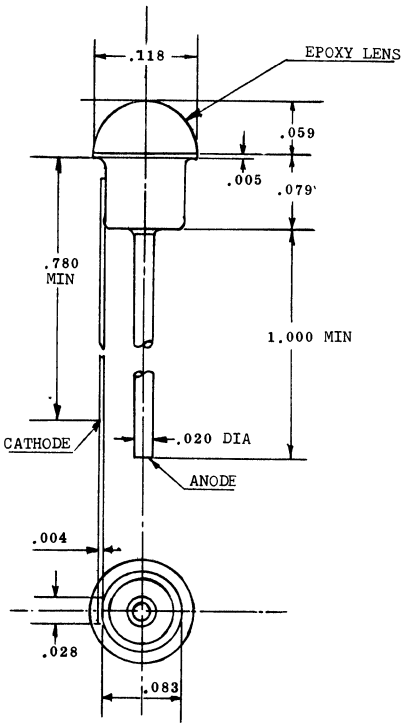

15. OUTLINE DRAWINGS

IN DRAWING NUMBER SEQUENCE

M596

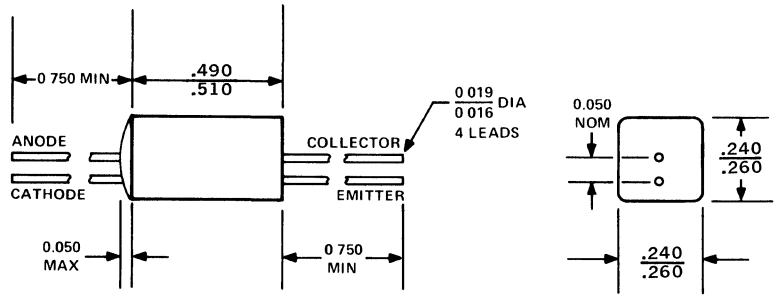

M597

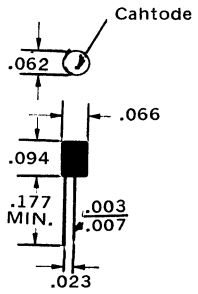

M598

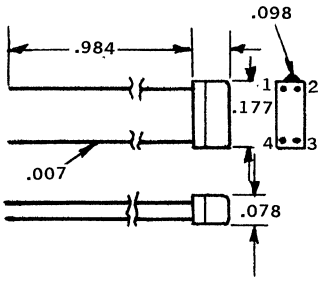

M599

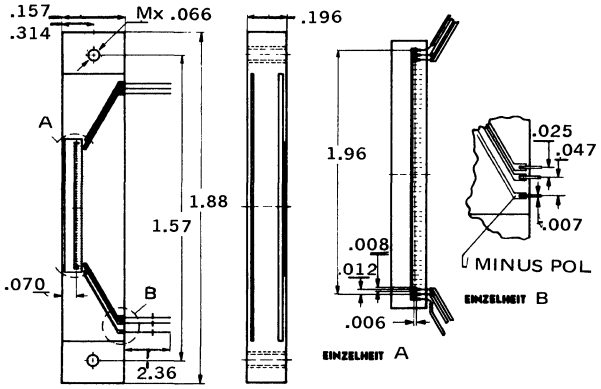

M600

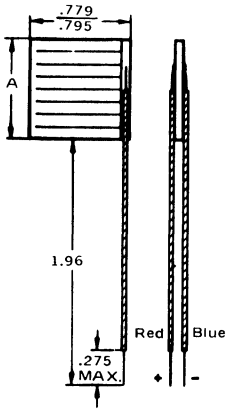

	A
M600	.779 .795
M600a	.374 .389

M601

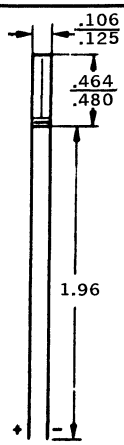

M602

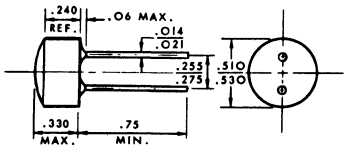

M603

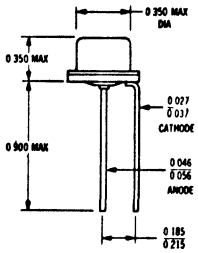

M604

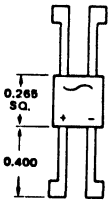

M605

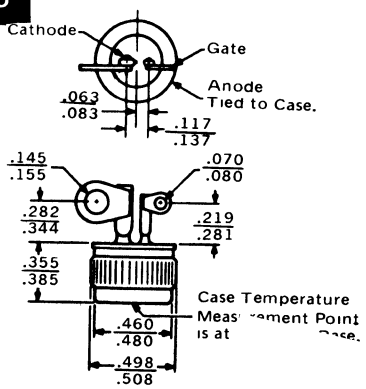

15. OUTLINE DRAWINGS

IN DRAWING NUMBER SEQUENCE

M606

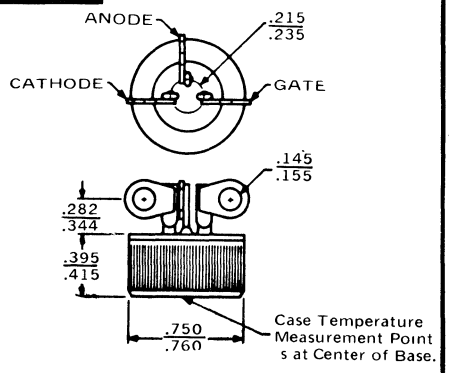

M607

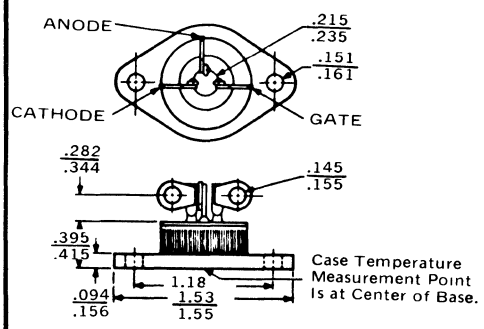

M608

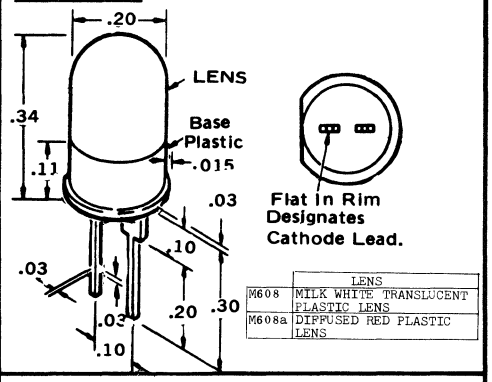

	LENS
M608	MILK WHITE TRANSLUCENT PLASTIC LENS
M608a	DIFFUSED RED PLASTIC LENS

M609

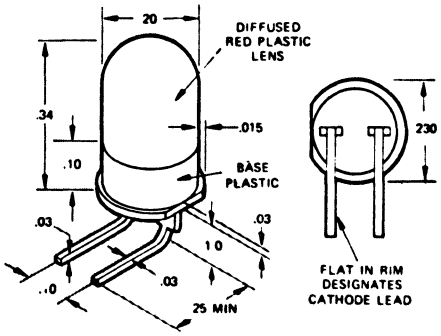

M610

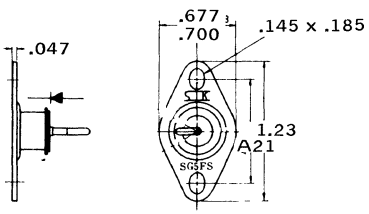

M611

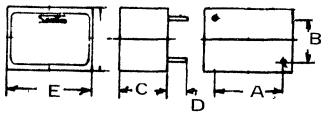

	A	B	C	D	E
M611	1.03	.570	.728	.275	1.37
	1.11	.649	MAX	MIN	MAX
M611a	1.92	.433	1.10	.275	2.28
	2.00	.511	MAX	MIN	MAX

M612

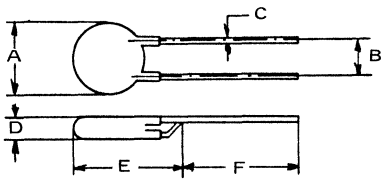

	A	B	C	D	E	F
M612	.826	.236	.031	.236	1.06	.787
	MAX	.314		MAX	MAX	MIN
M612a	.748	.236	.031	.236	1.14	.787
	MAX	.314		MAX	MAX	MIN
M612b	.629	.236	.031	.236	.984	.787
	MAX	.314		MAX	MAX	MIN

M613

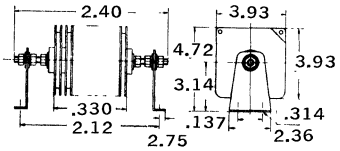

M614

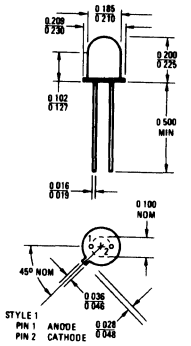

To convert inches to millimeters multiply by 25.4

M615

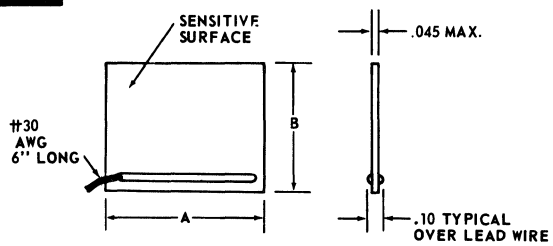

	A	B
M615	.250	.250
M615a	.375	.375
M615b	.500	.500
M615c	1.00	1.00
M615d	1.13	1.13
M615e	1.37	1.37
M615f	1.50	1.50
M615g	1.77	1.77
M615h	2.00	2.00
M615j	.250	.484
M615k	.440	.730
M615m	.625	.765
M615n	1.11	.622
M615p	1.16	.654
M615q	.875	.535
M615r	.875	.843
M615s	.875	.875
M615t	1.45	.640
M615u	1.11	.890
M615v	1.50	1.50
M615w	1.93	1.43
M615x	.281	.875
M615y	4.18	.250
M615z	5.85	.500
M615aa	6.00	.437
M615ab	1.68	.886
M615ac	6.00	.250

M616

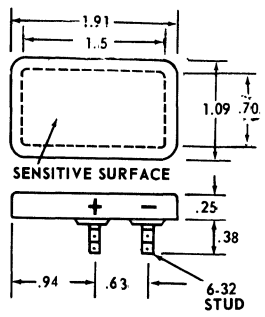

15. OUTLINE DRAWINGS

IN DRAWING NUMBER SEQUENCE

M617

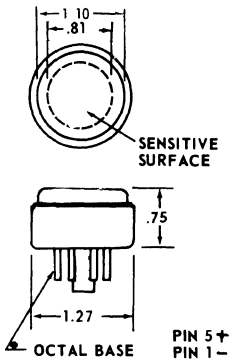

M618

	A	B
M618	1.75	1.31
M618a	2.25	1.75

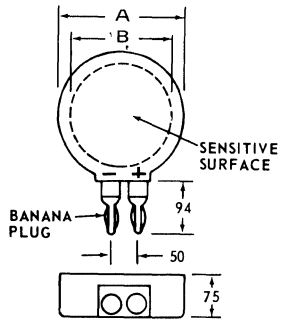

M619

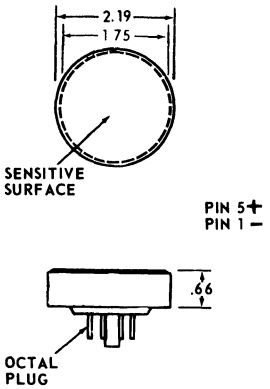

M620

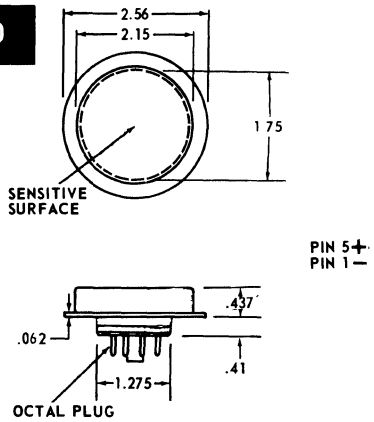

M621

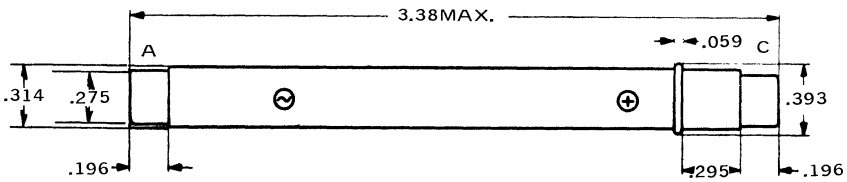

M622

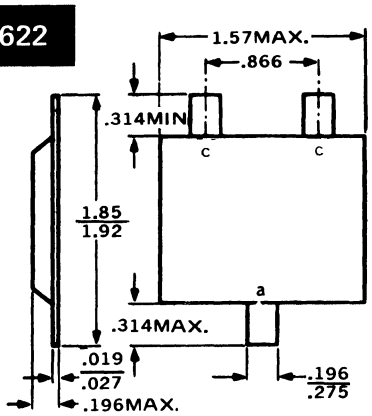

M623

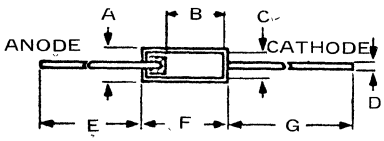

Slice Thickness .010 inches.

	A	B	C	D	E	F	G
M623	.049	.086	.037	.005	1.18	.130	1.18
M623a	.084	.140	.072	.005	1.18	.185	1.18

M624

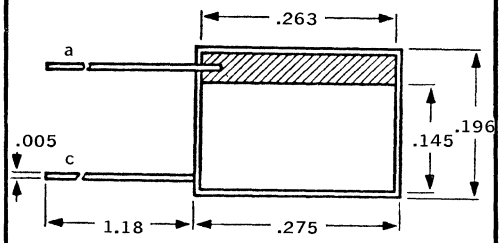

Slice Thickness .010 Inches.

M625

	A	B	C	D
M625	.360	.280	.480	.095
	.405	.320	.520	.105
M625a	.400	.285	.400	.102
	MAX	.315	MIN	.118

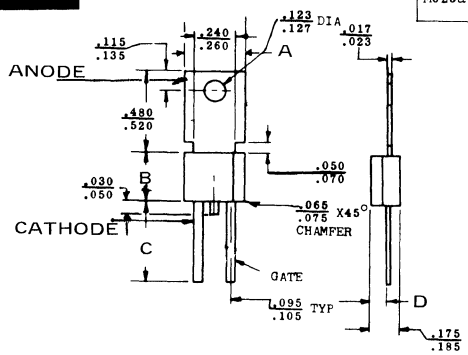

M626

	A	B	C	D	E
M626	.480	.360	.280	.050	.095
	.520	.405	.320	.070	.105
M626a	.480	.400	.285	.045	.102
	.520	MAX	.315	MAX	.118

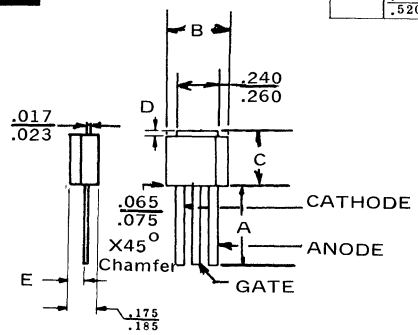

15. OUTLINE DRAWINGS

IN DRAWING NUMBER SEQUENCE

M627

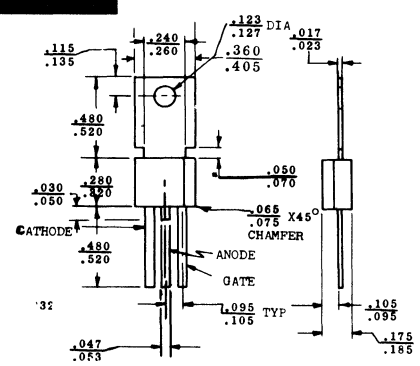

M628

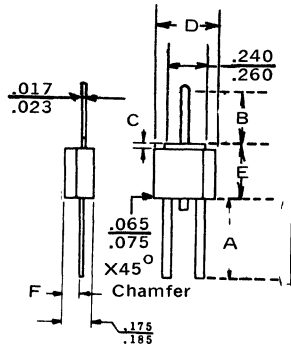

	A	B	C	D	E	F
M628	.297 .350	.212 .297	.050 .070	.360 .405	.280 .320	.095 .105
M628a	.297 .327	.277 MAX	.045 MAX	.400 MAX	.285 .315	.102 .118

M629

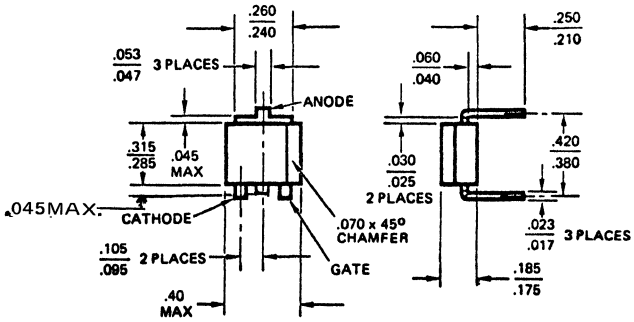

M630

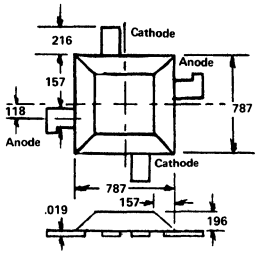

M631

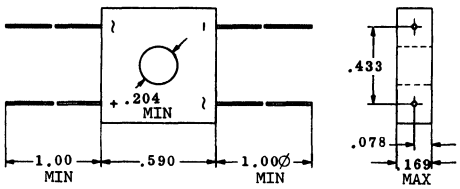

M632

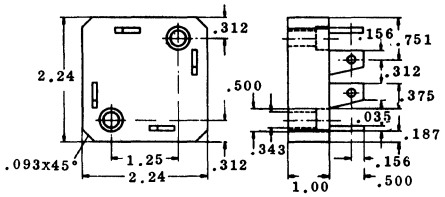

M633

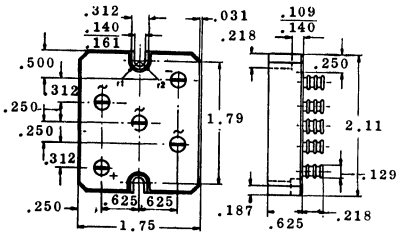

P1

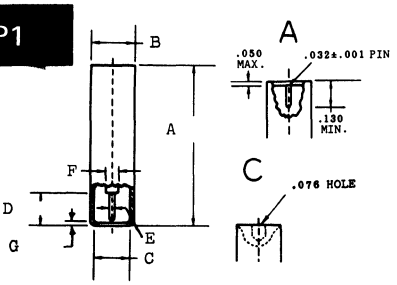

	A	B	C	D	E	F	G
P1	.555	.162	.125	.099	.021	.045	.018
P1a,b,c	.765	.221	.184	.147	.033	.063	.029

P2

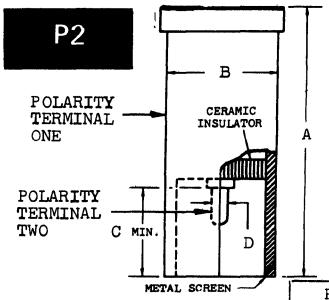

	A	B	C	D	POLARITY TERMINAL ONE	POLARITY TERMINAL TWO
P2	.750	.343	.241	.051		
P2a	.687	.343	.145	.063		
P2b	.750	.343	.247	.051	CATHODE	ANODE
P2c	.750	.343	.247	.051	ANODE	CATHODE
P2d	.740 .760	.365 .375	.255	.050 .052		

P3

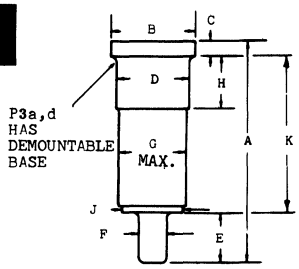

	A	B	C	D	E	F	G	H	J	K
P3	.800 .840	.292 .296	.052	.246 .250	.180 .190	.092 .094	.240	.193 .199	.195 .225	.620 .650
P3b	.810			.250	.200	.095				
P3c	.799 .835	.291 .295	.051 .055	.248 .250	.197 .205	.091 .094				.551 .575
P3d	.800 .840	.292 .296	.047 .057	.246 .250	.180 .190	.092 .094	.222 .240	.193 .199	.195 .215	

15. OUTLINE DRAWINGS

IN DRAWING NUMBER SEQUENCE

P4

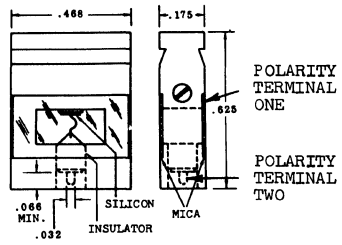

	Polarity-Terminal ONE	TWO
P4		
P4a	Anode	Cathode
P4b	Cathode	Anode

P5

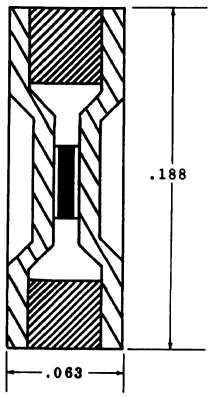

P6

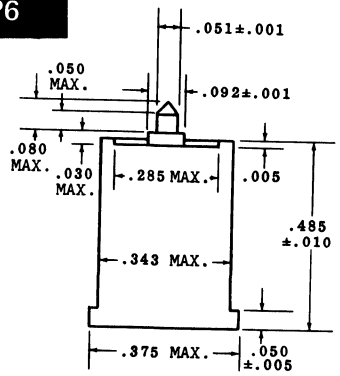

P8

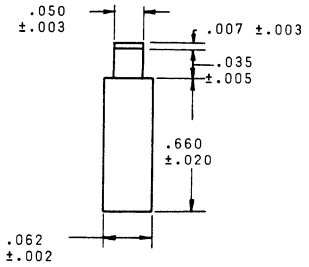

P9

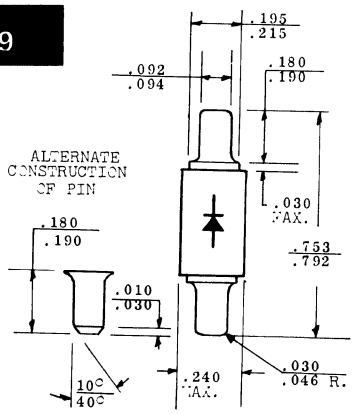

P10

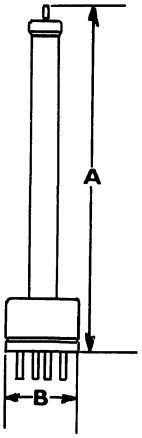

	A	B
P10	9.00	A4-29
P10a	5.40	A4-10
P10b	3.30	A4-10

P11

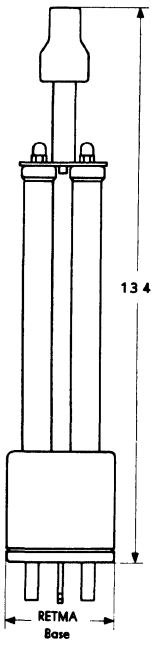

P12

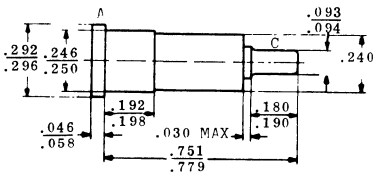

S4

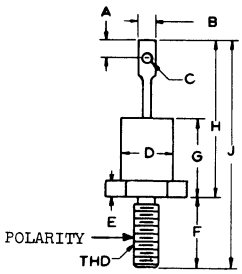

	A	B	C	D	E	F	G	H	J	THD.	POLARITY
S4a		.125	.062	.250	.100	.435	.375	.800		10-32	
S4b		.123	.070	.435	.095	.450	.375	.800	1.25	20-32	
S4c		.140	.070	.290	.060	.450	.450	.800	1.25	10-32	
S4d	.093		.078	.375		.437	.420	.650	1.50	10-32	
S4e		.236	.126	.461		.394	.354		.339	5M	
S4f				.276	.157	.433	.394	.787		10-32	
S4g		.140	.060	.290		.437	.450	.800	1.24	10-32	
S4h			.175	.635	.250	.450	1.20			1/4-28	
S4j		.158	.079	.358	.130	.394	.484	.878	1.27	10-32	
S4k		.335	.157	.453	.165	.437	.500	1.00		M6-P1.0	ANODE
S4l		.197	.071	.280	.140	.437	.433	.807		M5-P5.0	CATHODE
S4m			.153	.570	.200	.490	1.04	1.49	.746	1/4-28	
S4n			.175	.635	.120 .250	.434		1.2	1.65	1/4-28	
S4p		.157	.079			.307	.354	.787	1.10	M5	
S4q			.078			.383	.492	.906	1.30		
S4s		.315 MAX	.142 .157	.657 MAX	.157 .189	.425 .465	.472 MAX	1.00 MAX	1.46 MAX		
S4t		.374 MAX	.142 .157	.657 MAX	.122 .150	.425 .465	.500 MAX	1.00 MAX	1.46 MAX	M6X1.0	
S4u			.125			.314	.551	1.14	1.45	M6	CATHODE

S8

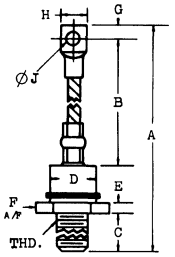

	A	B	C	D	E	F	G	H	ØJ	THREAD
S8	5.53	3.75	.625	.810	.218	1.10	.234	.468	.250	1/2-20 UNF-2A
S8a	5.53	3.75	.800	.810	.187	1.13	.234	.468	.250	3/4-14 NPT
S8b	7.42		.812	1.16		1.25		.625	.343	3/4-16 UNF-2A
S8c	6.42		1.04	1.16		1.25		.625	.343	3/4-14 NPT
S8d	6.19		.812	1.16		1.25		.625	.343	1/2-20 UNF-2A
S8e	4.00		.718			1.13	.250	.531	.281	1-20 NEF-2A
S8f	8.70	6.25	1.07	1.15	.344	1.67	.500	.800	.540	3/4-16 UNF-2A
S8g	5.88		.656	1.00	.249			.500	.296	1/2-20 UNF-2A
	5.50		.594		.187			.437	.265	
S8h	5.38	3.50	.825	.905	.505	1.06	.310	.550	.280	3/4-14 NPT
S8j	6.63	4.84	.590		.216		.335	.590	.335	M10
S8k	6.65	4.79	.590		.275		.335	.590	.335	16 X 1.5
S8m	7.04	5.28	.689		.205	.102		.650	.307	M12X1.5
	MAX	MAX	.728		.236	.106		MAX	.331	
S8n	7.48	5.20	.795		.250	.125		.886	.327	M20X1.5
	MAX	MAX	.180		.268	.126			.350	
S8p	12.6	9.4	1.10	1.65	.472	1.97	.630	1.10	.492	M30X2.0
	MAX	MAX		MAX					.532	
S8q	4.30		.605			1.031		.650	.250	3/8-24 UNF-2A MOD.
	4.80		.645			1.062		MAX	.310	

S11

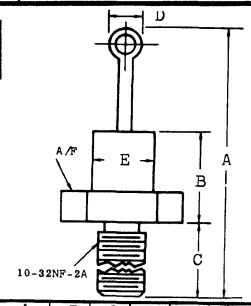

	A	B	C	D	E	A/F
S11	1.27	.420	.640	.125	.250	.445
S11a	1.25	.375	.495	.125	.435	.445
S11b	1.34	.433	.433		.275	.472
S11c	1.22	.394	.354	.138	.275	.437
S11d	1.13	.375	.453	.140	.275	7/16 HEX
S11e	1.25	.406	.438	.125	.270	.438
S11f	1.344	.344	.344	.219	.500	.500

S12

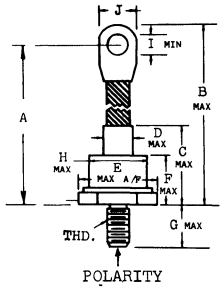

	A	B	C	D	E	F	G	H	I	J	THD.	POLARITY
S12		4.75	1.25	.500	1.06	.375	.687	.900	.250	.570	3/8-24	
S12a	9.25		3.22		1.61		.492		.450	1.06	M24X.59	
S12b	8.28		3.54		1.68		.787	1.58	.402	.965	M24-P1.5	ANODE
S12c	.460	.485	1.26		.67	.709	.493	.591	.260	.504	M8x1.25	CATHODE
S12d	9.84		3.07	.629	1.97	2.05	.984	1.89	.492	1.06	M30x2	
S12e	2.83	3.03	1.56		.688	.450	.422		.165	.394	M6	CATHODE
S12f		6.25	1.61		1.06	1.02	.690		.268	.610	M12-P15	ANODE
S12g		7.09	2.05		1.38	1.22	.984	1.10	.335		M20-P1.5	ANODE
S12h	1.06		4.72				.945		.512	1.44	M30-P20	ANODE
S12J		6.18					.590		.255	.551	M12	

S13

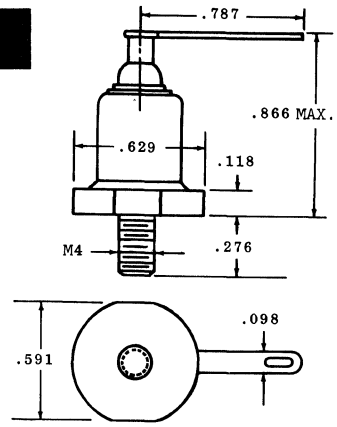

S14

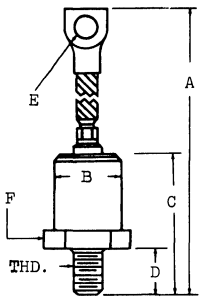

	A	B	C	D	E	F	THD.
S14b	5.28	.875	1.88	.625	.281	1.00	3/8-24UNF
S14c	5.69	1.09	2.69	.812	.281	1.25	1/2-20UNF
S14d	5.69	1.09	2.69	.812	.281	1.25	3/4-16UNF
S14e	6.75	1.09	2.94	.812	.343	1.25	3/4-16UNF
S14f	5.94	1.09	2.69	.812	.343	1.25	3/4-16UNF
S14f1	6.32	1.09	2.94	.812	.281	1.25	3/4-16UNF
S14f2	5.94	1.09	2.69	.812	.343	1.25	1/2-20UNF
S14g	5.75	1.09		.875	.281		3/4-14NPT
S14h	6.00	1.09		.875	.343		3/4-16NPT
S14j	5.94	1.09		.813	.344		3/4-16UNF-2A
S14k	3.62	.669	.944	.433	.137	1.25	1/4-28UNF
S14m	5.62	1.00	1.68	.656	.296	1.156	3/8-24UNF

S16

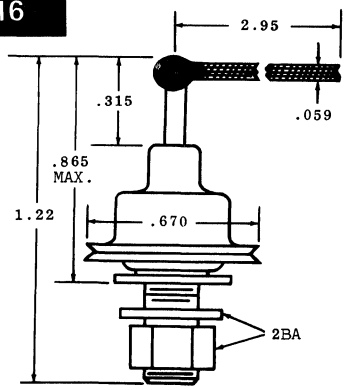

S17

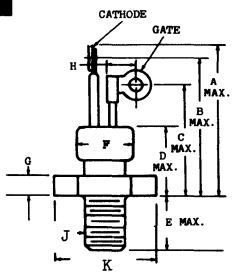

	A	B	C	D	E	F	G	H	J	K
S17	.770	.700	.540	.400	.452	.279	.094	.219	10-32,NF-2A	.437A/F
S17a	.880			.415	.442	.280	.140		10-32,NF-2A	.437A/F
S17b	1.20				.453		.220	.060	1/4-28UNF2A	.650
S17c	.855			.425	.453	.424	.175		10-32UNF-2A	.437

S18

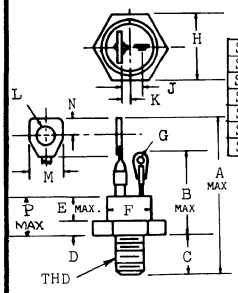

	A	B	C	D	E	F	G	H	J	K	L	M	N	P	THD.
S18	1.62	.875	.437	.125	.365	.402	.070	.562	.161	.096	.154	.290	.145	.490	1/4-28NF-2A
S18a	1.42		.315	.118		.413	.079	.473			.079		.118		M5
S18b	1.62	.800	.425	.186	.272	.452	.070	.562	.240		.154			.458	1/4-28UNF-2A
S18c	1.73	1.02	.433	.102	.527	.551	.066	.669			.150			.609	M6
S18d		.591	.433	.067		.303		.433			.071				M5
S18e	1.46	.827	.425			.433	.055	.551			.095			.512	M6
S18f	1.76	1.10	.433	.145		.511	.070	SW17	.157		.098	.196			M8-6

S19

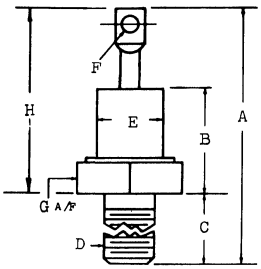

	A	B	C	D	E	F	G	H
S19	1.20	.394	.437	10-32NF-2A	.270	.070	.437	
S19a		.375	.437	10-32NF-2A	.280	.065	.434	.800
S19b	1.32	.886	.433	M5 PO. 9		.071		.886
S19c	1.26	.453	.433	M5	.362	.091	.550	.827
S19d	1.61	.563	.473	M6	.571	.150	.750	1.14
S19e	1.44	.500	.435	1/4-28	.425	.140	.563	1.00
S19f	1.56		.437	10-32 THD.		.125	.437	1.13
S19g	1.30	.401	.431	M5	.421	.062		.828
S19h	1.16	.397	.450	10-32 THD.	.255	.072	.434	.710
S19j	1.16	.405	.450	10-32 THD.	.270	.080	.434	.710
S19k	1.22	.393	.434	M5		.094	.473	.787
S19m	1.14	.394	.437		.276	.071	.433	.708
S19n	1.45	.472	.457	M6	.520	.156	.669	1.00
S19p	1.25	.452	.433	M6	.393	.165		1.00
S19q	1.25 MAX		.453 MAX	10-32 UNF-2A	.290 MAX	.160 MAX	.437 MAX	.800 MAX
S19r	1.18		.433	M5			.433	.629
S19s	1.249	.401	.223 .450	M5	.421	.062 .078	.433	.799
S19t	1.18	.393	.433	M5	.275	.070	.433	.748

S20

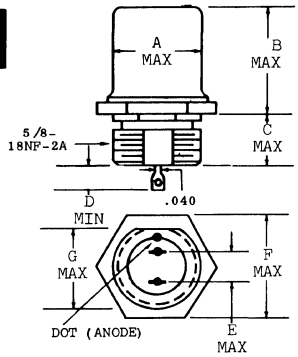

	A	B	C	D	E	F	G
S20	.635	.769	.390	.157	.240	.780	.595
S20a	.628	.764	.375	.188	.240	.766	

S21

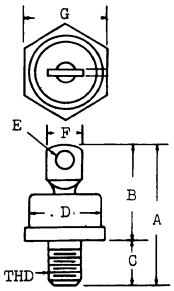

	A	B	C	D	E	F	G	THD
S21	1.219	.782	.437	.625	.140	.280	.687	1/4-28 UNF-2A
S21a	1.250	.812	.437	.625	.140	.312	.687	1/4-28 UNF-2A
S21b	1.610	.940	.440	.630	.145		.687	1/4-28 UNF-2A
S21c	1.460	.950	.450	.510	.166		.687	1/4-28 UNF-2A
S21d	1.460	1.00	.456	.433	.145	.314	.662	1/4-28 UNF-2A
S21e	1.634	1.20	.434	.635	.145	.686		1/4-28 UNF-2A
S21f	1.650	1.20	.450	.635	.172	.322	.686	1/4-28 UNF-2A
S21g	1.396	1.02	.375		.098		.670	M8

S23

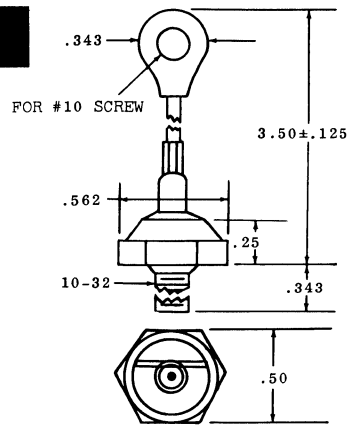

S24

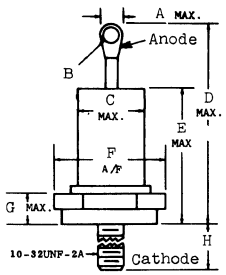

	A	B	C	D	E	F	G	H
S24	.125	.065	.310	.970	.670	.437	.145	.437
S24a	.250	.060 MIN	.424	.800	.405	.430	.175	.437
S24b	Reverse polarity of a version							
S24c	.125	.065	.280	.800	.375	.437	.110	.437
S24d	Reverse polarity of S24							

S25

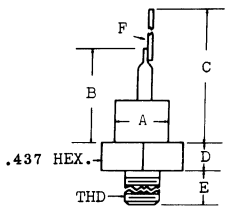

	A	B	C	D	E	F	THD
S25	.281	.562	1.937	.125	.437	.032	10-32
S25a	.250	.813	1.813	.125	.437	.032	10-32NF-2A
S25b	.425	.756	1.821	.175	.453	.035	10-32NF-2A
				.075	.422	.026	

S26

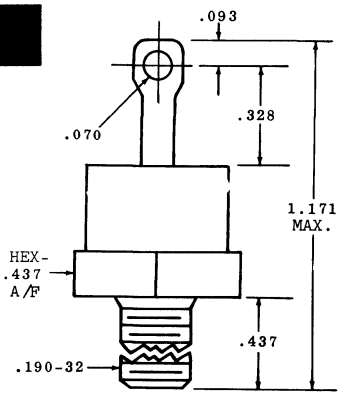

15. OUTLINE DRAWINGS

IN DRAWING NUMBER SEQUENCE

S27

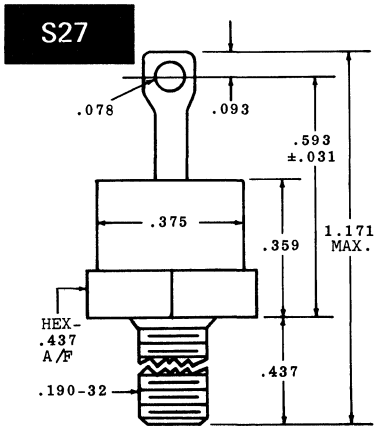

S29

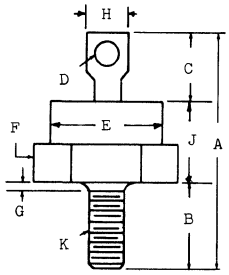

	A	B	C	D	E	F	G	H	J	K
S29	1.281	.437	.375	.140		.687A/F	.062		.450	1/4-28
S29a	1.453 MAX	.453 MAX	.220 MIN	.145	.667 MAX	.687A/F	.0625	.375 MAX	.450 MAX	1/4-28

S31

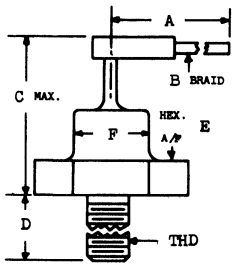

	A	B	C	D	E	F	THD
S31	3.00	.062	.660	.344 .406	.600		2BA
S31a	2.95	.059	.800	.421 .453	.425 .437	.366	10-32UNF2A

S33

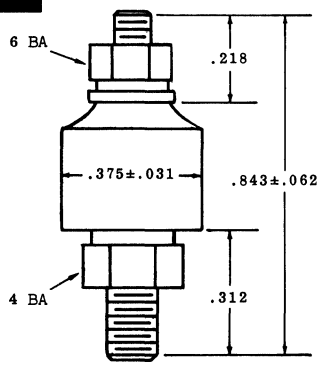

S35

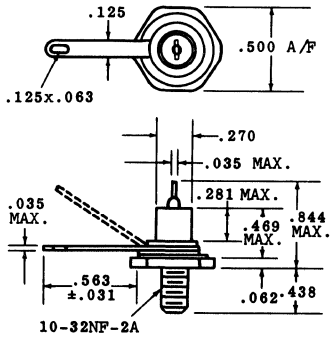

S38

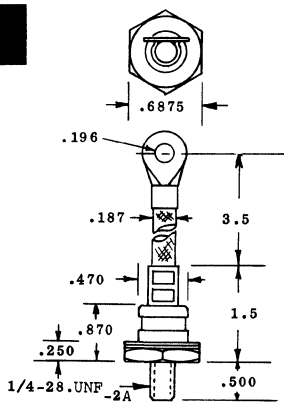

S41a

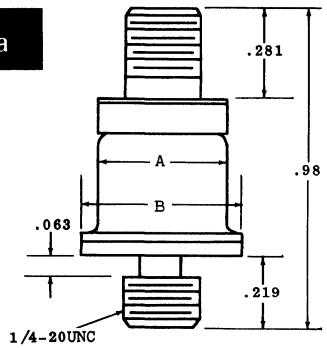

	A	B
S41a	.406	.50
S41b	.281	.375

S42

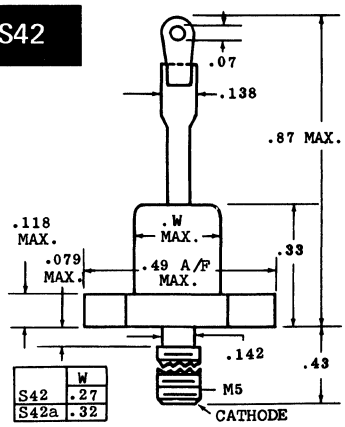

	W
S42	.27
S42a	.32

S43

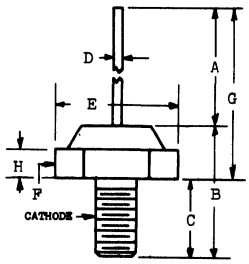

	A	B	C	D	E	F	G	H	THD
S43	1.50 MIN	.531 .655	.344	.051	.563	.50 A1F			10-32
S43a			.240 MAX	.023		.216 .500	.984 MIN	.157	M3

S48

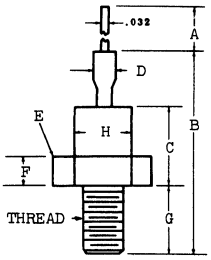

	A	B	C	D	E	F	G	H	THD.
S48	1.251	.13	.453	.094	.438	.250	.438	.250	10-32NF-2A
S48a	1.041	.12	.385	.064	.50	.188	.435	.274	2BA(.185) NORMAL
S48b	1.001	.10	.370		.431	.125	.437	.260	10-32UNF-2A
S48c	1.331	.14	.394		.543	.118	.433	.256	M-5

15. OUTLINE DRAWINGS

IN DRAWING NUMBER SEQUENCE

S50

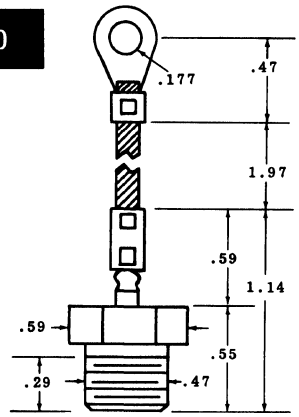

S51

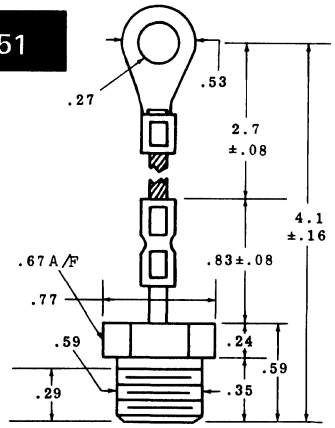

S52

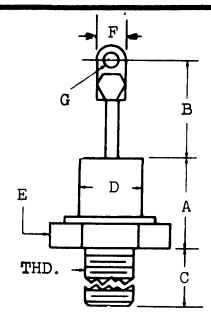

	A	B	C	D	E	F	G	THD
S52	.390	.400	.440	.247	.429 HEX		.093	10/32 NF-2A
S52a	.630	.630	.316	.512	.67 A/F	.343	.202	M8
S52b	.256	.394	.433	.335	.472 HEX	.134	.094	
S52c	.590		.433	.488	.433	.244	.126	M8
S52d	.384	.398	.422	.488		.263	.151	1/4-28UNF 2A
	.435	.421	.435	.492		.273	.161	

S53

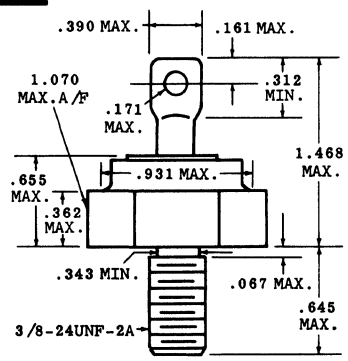

S56

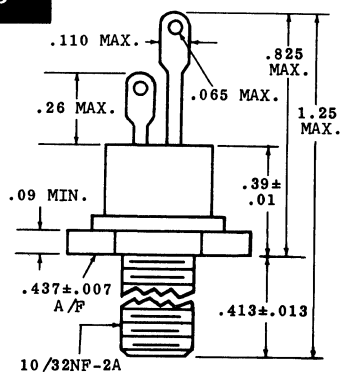

S61

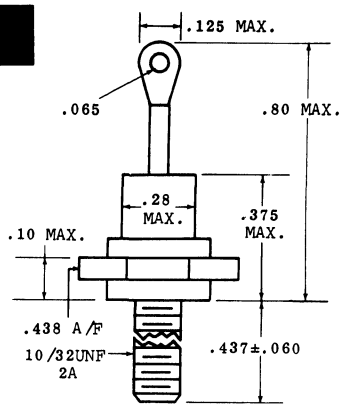

S62

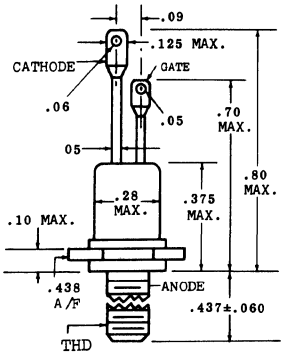

	THD.
S62	10/32UNF2
S62a	M5

S63

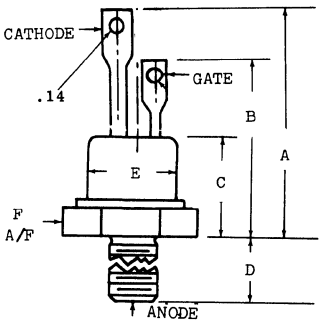

	A	B	C	D	E	F	THD
S63	1.25	.850	.553	.450	.606	.687	1/4-28
S63a	1.42	1.11	.797	.437	.606	.687	1/4-28
S63b	1.75	1.17	.860	.625	.980	1.125	3/8-24
S63c	.950		.405	.437	.366		10-32 UNF-2A
S63d	1.81	1.25	.906	.760		1.13	1/2-20UNF-2B
S63e	1.42	1.16	.810	.437	.672	.680	1/4-28
S63f	.854		.405	.437	.366	.854	10-32 UNF 2A
S63g	1.22		.629	.433	.629		M8
S63h	1.21 MAX	.875 MAX	.565 MAX	.425 .450	.667 MAX		1/4-28UNF-2A

S65

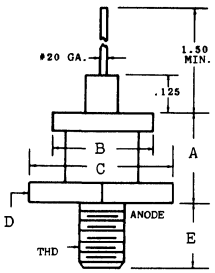

	A	B	C	D	E	THD
S65	.438	.375	.500	.438	.344	10-32
S65a	.406	.312	.344	.312	.375	6-32

S66

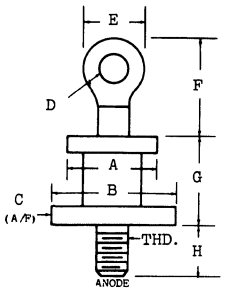

	A	B	C	D	E	F	G	H	THD
S66	.375	.500	.438	.109	.219	.375	.438	.344	10-32
S66a	.500	.563	.500	.109	.219	.375	.438	.344	10-32
S66b	.312	.343	.312	.156	.125	.438	.406	.375	6-32
S66c	.438	.562	.500	.156	.125	.438	.406	.375	10-32

S67

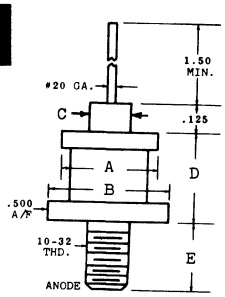

	A	B	C	D	E
S67	.500	.563		.438	.344
S67a	.437	.562	.080	.406	.375

S68

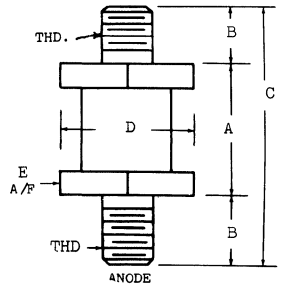

	A	B	C	D	E	THD
S68	.781	.4691	.688	.844	.705	5/16-24
S68a	.496	.3441	.156	.563	.500	10-32-2A
S68b	.406	.3751	.156	.344	.312	6-32-2A
S68c	.406	.3751	.156	.562	.500	10-32-2A
S68d	.781	.4371	.656	.843	.750	5/16-24

S69

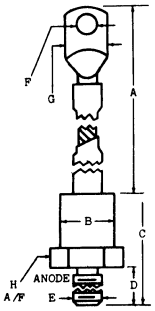

	S69	S69a	S69b	S69c	S69d	S69e
A	3.35	4.73	5.12	6.0	5.90	4.17
B	.394	.510	.865	.670	.866	
C	.827	.865	1.50	1.10	1.50	.866
D	2.75	.315	.590	.530	.590	.314
E	M5	M6	M10	M8	M10	M6
F	.177	.205	.256	.220	.256	.204
G	.315	.315	.432	.500		
H	.473	.550	1.06	.670	1.06	
Polarity	Anode					Cathode

S72

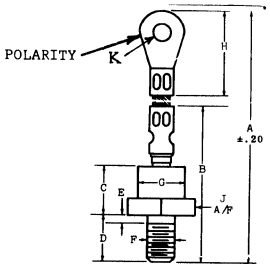

	A	B	C	D	E	F	G	H	J	K	POLARITY
S72	6.78	2.36	.770	.730	.100	M12		1.32	1.06		ANODE
S72a	6.50	2.20	.750	.630	.100	M8		1.00	1.06		ANODE
S72b	6.90	2.46	.830	.750	.140	M12	.750	1.30	1.06		ANODE
S72c	5.30	1.83	.590	.530	.080	M8	.460	.940	.670		ANODE
S72d	5.30	1.83	.590	.530	.080	M8	.460	.940	.670		CATHODE
S72e	6.90	2.46	.830	.750	.140	M12	.730	1.30	1.06		CATHODE
S72f	9.45	3.23	1.69	.790		M24		2.12	1.50	.310	ANODE
S72g	7.80	3.15	1.69	.710		M16		1.73	1.30	.310	ANODE
S72h	7.10	2.04	1.25	.990		M12		1.38	.340		
S72i	7.61	1.38	.830	.710	.140	M12	.730		1.10	.340	ANODE
S72k	7.61	1.38	.830	.710	.140	M12	.730		1.10	.340	CATHODE
S72l	9.45	3.31	1.77	.790		M24		2.13	1.50	.315	CATHODE
S72m		2.36	.945	.551		M12	.866		1.06	.327	ANODE
S72n	4.82	1.78	.708	.452	.086	M8x	.590		.669	.248	ANODE
	5.29	MAX	MAX	.531	MAX	1.25	MAX			.271	

S74

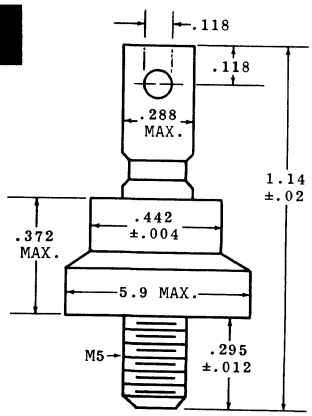

S75

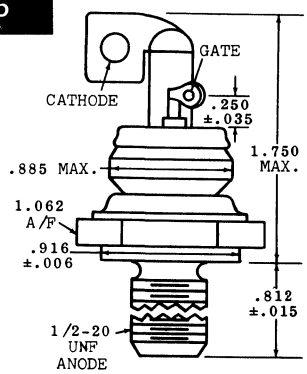

S81

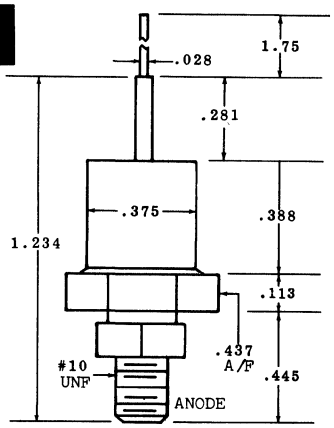

S82

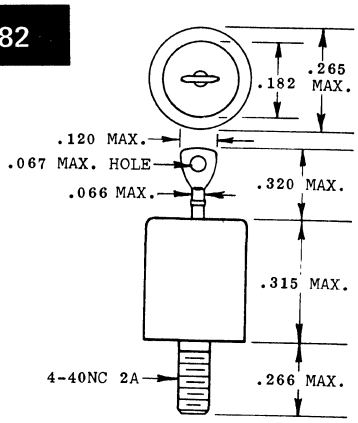

S83

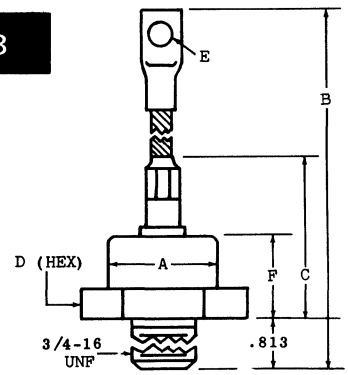

	A	B	C	D	E	F
S83	1.25	5.937	1.875	1.625	.344	1.06
S83a	1.75	6.938	2.594	2.250	.531	1.66
S83b	1.25	6.937	1.875	1.625	.344	1.06

S84

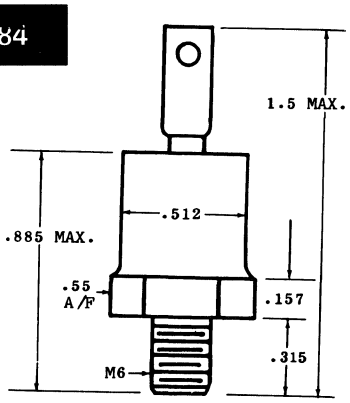

S85

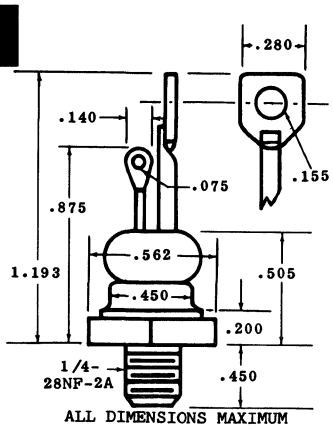

S87

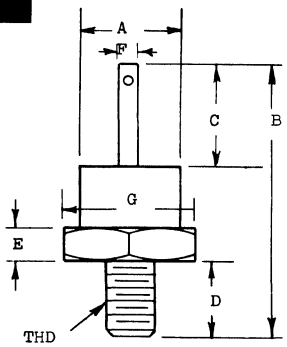

	A	B	C	D	E	F	G	THD
S87	.314	1.13	.461	.276	.138			M4
S87a	1.2	2.25	1.18	.50	.125	.525	1.25	10-32
S87b	1.72	2.9	.90	1.00	.375	.760	1.75	3/4-16UNF
S87c	1.94	3.50	1.4	1.00	.375	1.10	2.0	3/4-16UNF
S87d	2.20	3.72	1.62	1.00	.375	1.10	2.25	3/4-16UNF
S87e	.314	1.13	.40	.314	.112	.08	.392	M5
S87f	1.20	1.96	.835	.593	.115	.500	1.23	3/8-24-UNF-2A
	MAX	2.40	1.04	.657	.135	.525	1.26	

S88

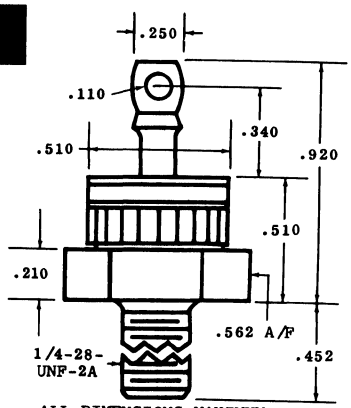

ALL DIMENSIONS MAXIMUM

S91

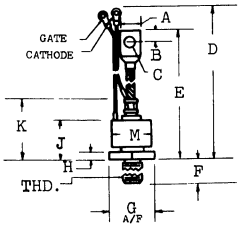

	A	B	C	D	E	F	G	H	J	K	M	THD.
S91	.550	.310	.271	7.46	.38	.812	1.06	.219	1.041	.65	1.00	1/2-20UNF-2A
S91a	.755	.453	.416	8.19	8.06	.880	1.50		1.151	.77	1.50	3/4-16UNF-2A
S91b	.807		.402	8.68	8.28	.787	1.68	.394	3.54		1.58	M24 P1.5

S94

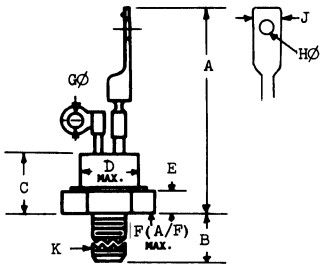

	A	B	C	D	E	F(A/F)	GØ	HØ	J	K
S94	1.50	.474	.453	.454	.158	.570MAX	.090			M6
S94a	1.192	.422 .453	.504	.588	.134		.063 .075	.126 .165	.299	1/4-28UNF
S94b	.807	.354	.374	.346	.126	.551	.065	.065		M6 P1

S95

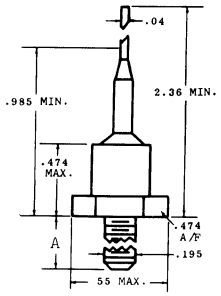

	A
S95	.197
S95a	.315

S96

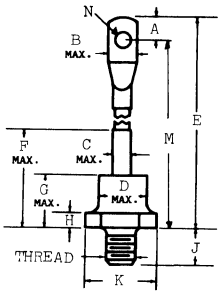

	A	B	C	D	E	F	G	H	J	K	M	N	THREAD
S96	.40	.510	.335	.90	05.90	1.84	.950	.300	.630	1.37			
S96a		.687	.500	1.00	5.56	2.13	1.50	.500	.836	1.25			3/4-16-UNF-2A
S96b						1.58	.866		.472		6.77	.251	M10

S98

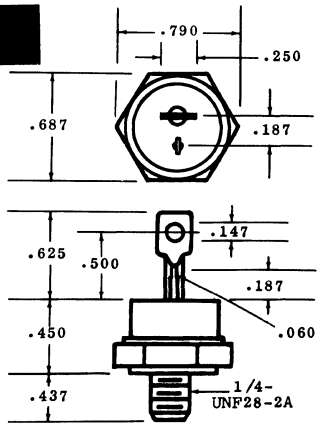

S101

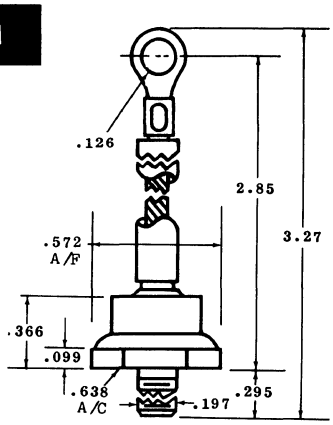

S102

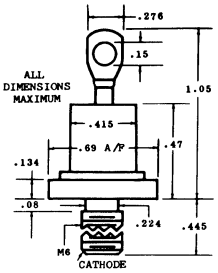

S102a SAME AS S102 EXCEPT STUD IS ANODE

S103

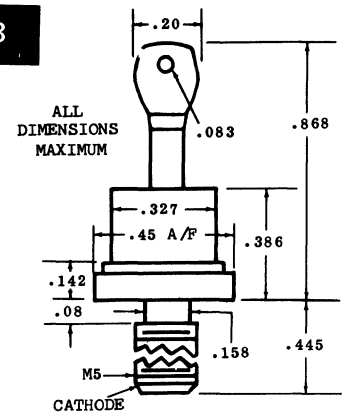

S104

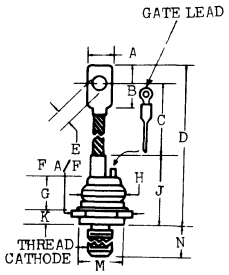

	A	B	C	D	E	F	G	H
S104	.590	.700	4.5	6.3	.268	1.06	.630	.945
S104a	.590	.700	4.5	6.3	.268	1.06	.630	.945
S104b	.650	.750		6.5	.250	1.06	1.25	1.00

	J	K	M	N	THREAD	GATE LEAD
S104	1.54	.315	.910	.810	M12	NO
S104a	1.54	.315	.910	.810	M12	YES
S104b	1.75	.350		.827	1/2-20UNF2A	YES

S105

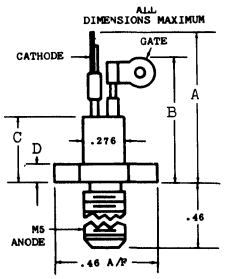

	A	B	C	D
S105	.77	.63	.34	1.14
S105a	.86	.71	.435	.095

S106

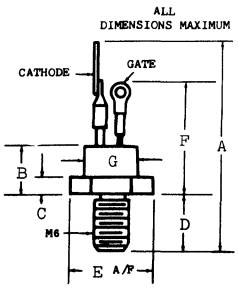

	A	B	C	D	E	F	G
S106	1.58	.415	.120	.428	.570	.880	.415
S106a	1.19	.505	.135		.550	.880	.415
S106b	1.88	.583	.197	.433		1.02	.550
S106c	1.17	.505	.200	.453	.562	1.19	.544

S107

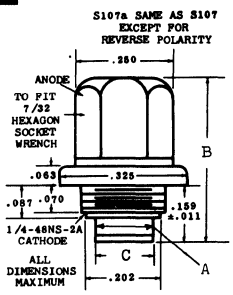

	A	B	C
S107	.166	.435	.166
S107a	.166	SAME AS S107 EXCEPT FOR REVERSE POLARITY	
S107b	.125	SAME AS S107; ALSO AVAILABLE WITHOUT ADAPTOR	
S107c	.080	.385	.125 ALSO AVAILABLE WITHOUT ADAPTOR

S108

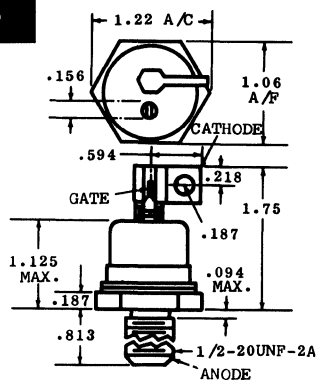

S110

	S110	S110A
A	5.75	6.8
B	3.0	3.7
C	.47	.708

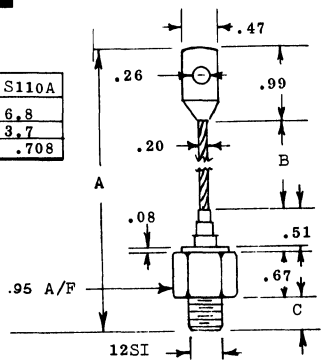

S112

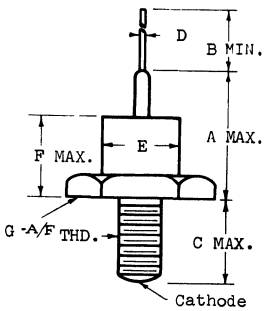

	A	B	C	D	E	F	G	THD.
S112	.690	1.38	.314	.024	.335	.354		M5
S112a	.905	1.37	.393	.031	.255	.433		M5
S112b	.555	1.36	.315	.032		.354	.433	M5

S113

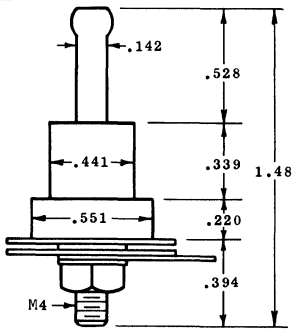

S115

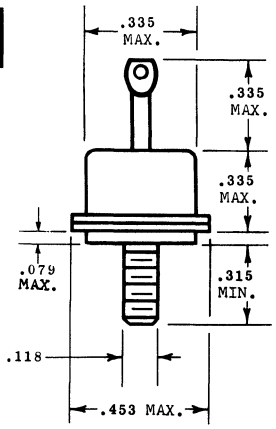

15. OUTLINE DRAWINGS

IN DRAWING NUMBER SEQUENCE

S117

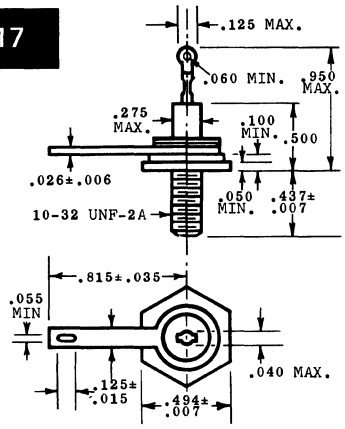

S120

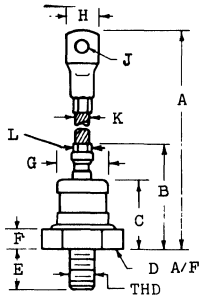

	A	B	C	D	E	F	G	H	J	K	L	THD.
S120	6.13	2.25	1.38	1.38	.813	.406	1.00	.688	.313	#3		1/2-20UNF
S120a	5.51	2.01	1.34	1.26	.787	.433	1.02	.630	.330		.394	3/4-16UNF
S120b	5.56	2.25	1.34	1.25	.812	.270	1.00	.710	.328			3/4-16UNF
S120c	5.71	2.12	1.38	1.26	.790	.374	1.01	.710	.354		.520	3/4-16UNF
S120d	9.02	2.76	.85	1.97	.985	.590	1.66	.906	.414		.630	M24
S120e	9.09	2.48	1.73	1.50	.787			.886				M24
S120f	2.24	1.42	1.26	.807	.453	1.02	.669	.331			.433	3/4-16UNF-2A
S120g	10.23 MAX	3.00 MAX	1.64 MAX	1.69 MAX	1.09 MAX	.446 MAX	1.47 MAX	.990 MAX	.421 MAX			3/4-16UNF-2A

S121

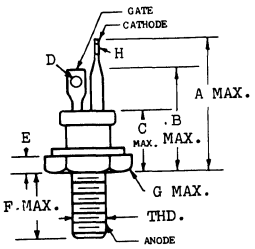

	A	B	C	D	E	F	G	H	THD
S121	.825	.660	.400		.100	.450	.440	.055	10-32NF-2A
S121a	1.19	.88	.500	.070		.440	.56	.160	1/4-28UNF-2A

S122

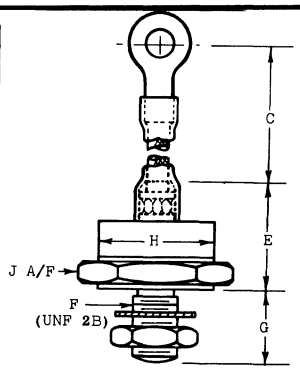

	C	E	F	G	H	J
S122	4.40	.951	3/8-24	.590	1.00	1.125
S122a	4.00	.731	1/4-28	.437	.638	.688
S122b	4.55	.702	1/4-28	.437		

S123

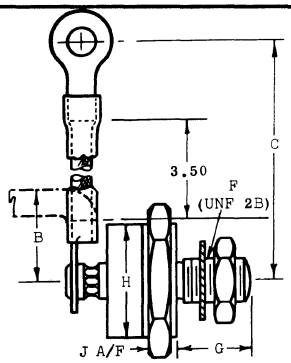

	B	C	F	G	H	J
S123	.797	4.80	3/8-24	.590	1.00	1.125
S123a	.734	4.50	1/4-28	.437	.638	.688
S123b		4.37	1/4-28	.437	.551	.688
S123c		4.88	1/4-28	.437		

S124

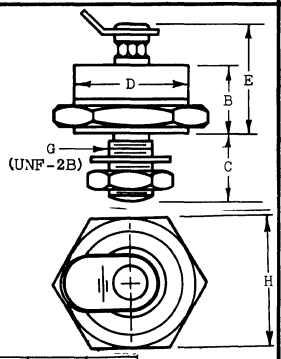

	B	C	D	E	G	H
S124	.556	.590	1.00	.870	3/8-24	1.125
S124a	.424	.437	.638	.702	1/4-28	.688
S124b	.533	.437	.551	.850	1/4-28	.688
S124c	.408	.437		.702	1/4-28	

S125

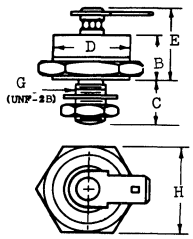

	B	C	D	E	G	H
S125	.556	.590	1.00	.870	3/8-24	1.125
S125a	.424	.437	.638	.702	1/4-28	.688
S125b	.533	.437	.551	.850	1/4-28	.688
S125c	.475± .015	.50± .020	.565± .005	.775± .018	1/2-20 2A	.867± .005
S125d	.580	.520	.570	.800	1/4-28 -2A	.866

S128

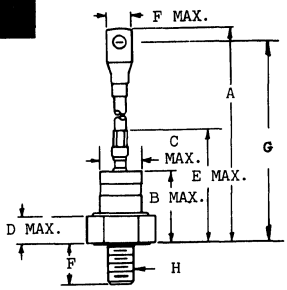

	A	B	C	D	E	F	G	H
S128	5.0	1.063	.625	.406	1.688	.375		M12x1.75
S128a		1.12	.89	.35	1.75	.109 MAX	6.3	3/8-24

S131

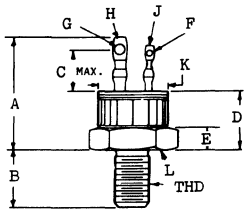

	A	B	C	D	E	F	G	H	J	K	L	THD.
S131	.950	.452	.350	.502	.210	.040	.070	CATHODE	GATE	.510	.557	1/4-28UNF-2A
S131a	.950	.452	.350	.502	.210	.040	.070	CATHODE	GATE	.510	.557	M6
S131b	.944	.433		.492	.196	.039	.078			.551		M6
S131c	.950	.438		.535		.060	.090	CATHODE	GATE	.625	.680	1/4-28UNF-2A
S131d	1.19	.437		.418	.156	.063	.145	MAIN TERM.1	GATE	.544	.562	1/4-28UNF-2A
S131e	1.15 MAX	.432 .442	.525	.475 MAX	.086 .098	.035 .045	.145 .160	CATHODE	GATE	.510		1/4-28UNF-2A
S131f	1.16 MAX	.432 .442	.538	.475 MAX	.086 .98	.035 .045	.145 .160	CATHODE	GATE	.505		1/4-28UNF-2A
S131g	.950 MAX	.420 .454		.520 MAX	.195 .205	.045 .055	.065 .075	MAIN TERM.1	GATE	.487 .500	.490 .510	10-32UNF-2A
S131h	1.16	.550	.197	.629	.177	.051		CATHODE	STUD			M8
S131j	.885	.452		.492	.177	.043	.066	CATHODE	GATE			M6
S131k	.950 MAX	.422 .453		.330 .505	.113 .200	.058 .068	.086 .090	MAIN TERM.1	GATE	.544 MAX		1/4-28UNF-2A
S131m	.950 MAX	.420 .455		.535 MAX		.055 .065	.080 .095	MAIN TERM.1	GATE	.501 .505		1/4-28UNF
S131n	.865 MAX	.432 .442	.350 MAX	.475 MAX	.086 .098	.035 .045	.065 .075	MAIN TERM.1	GATE			1/4-28UNF-2A
S131p	.895 .975	.422 .453		.460 .525	.100 .225	.040 .075	.040 .075	G	MAIN TERM 1	.525 MAX	.544 .562	1/4-28UNF-2A
S131q	.950	.455						CATHODE	GATE			1/4-28UNF-2A
S131r	.950 MAX	.420 .455						CATHODE	GATE	.551 .559		
S131s	.950 MAX	.420 .455						MAIN TERM.1	GATE	.551 .559		

15. OUTLINE DRAWINGS

IN DRAWING NUMBER SEQUENCE

S132

S132a SAME AS S132 EXCEPT LESS GATE CONNECTOR

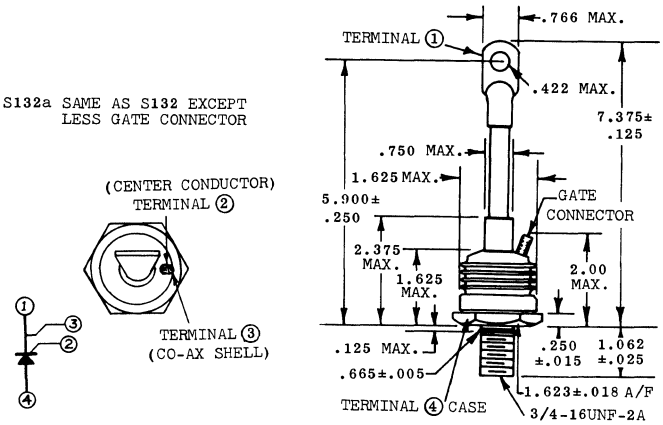

S134

	A	B
S134	.050	.125±.050
S134a	.065	.100±.075

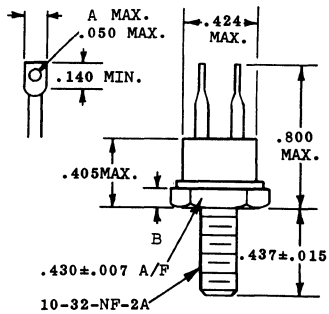

S135

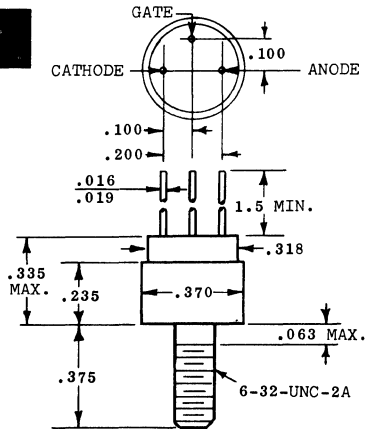

S140

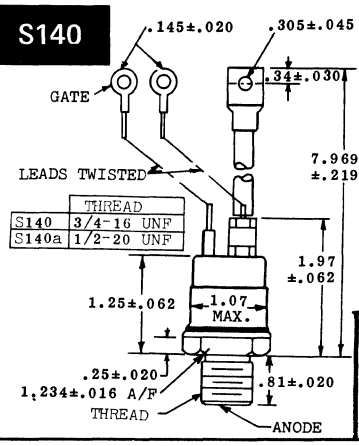

	THREAD
S140	3/4-16 UNF
S140a	1/2-20 UNF

S141

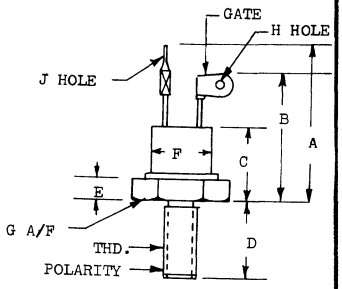

	A	B	C	D			G	H	J	POLARITY	THD.
S141	.800	.600	.400	.400	.180	.340	.450				
S141a	.771	.605	.401	.437	.106	.271	.433	.070	.070	ANODE	M5F09
S141b	.947	.927	.394	.433	.118	.315	.433	.065	.065	ANODE	M5
S141c	1.20	.866	.551	.425	.114		.539	.063	.130		M6X1.0
S141d	.827 MAX.	.709 MAX.	.413 MAX.	.394 ±.020	.138 ±.020			.079 ±.008			10.32-NF

S142

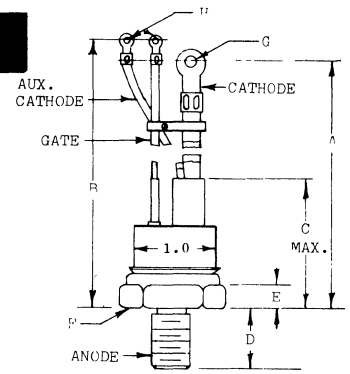

	A	B	C	D	E	F	G	H
S142	7.10	7.80	2.40	1.20	.500	1.5A/F	.400	.170
S142a	6.19	6.89		.708	.393		.334	.118

S143

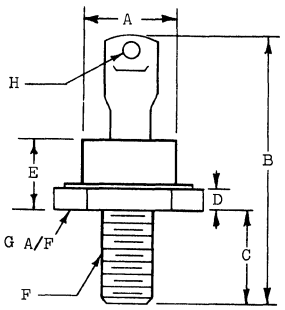

	A	B	C	D	E	F	G	H
S143	.500	1.44	.437	.094	.375	1/4-28	.688	.145
S143a	.570	1.58	.520	.262	.490	1/4-28	.430	.157

S144

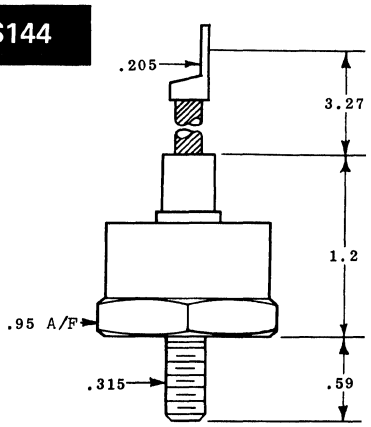

S145

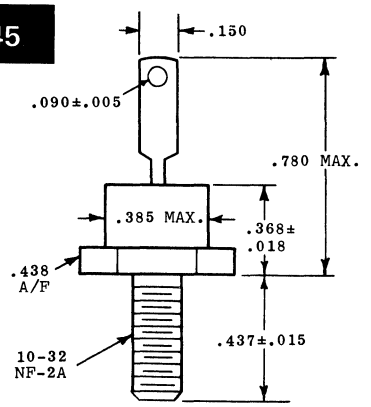

S147

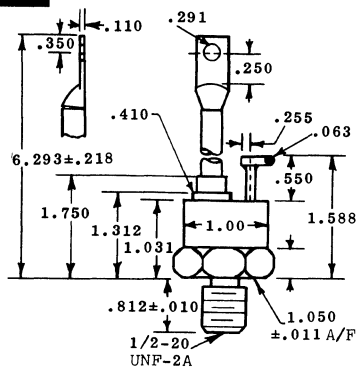

S148

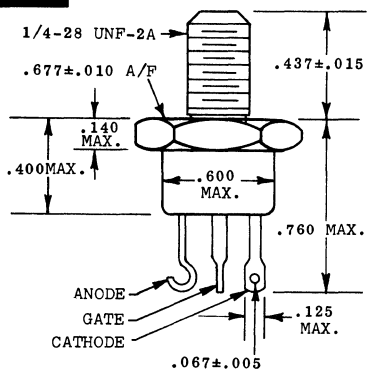

15. OUTLINE DRAWINGS

IN DRAWING NUMBER SEQUENCE

S154

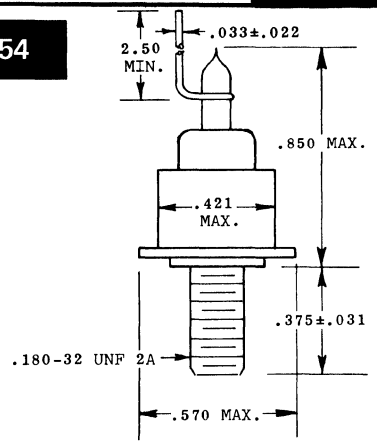

S155

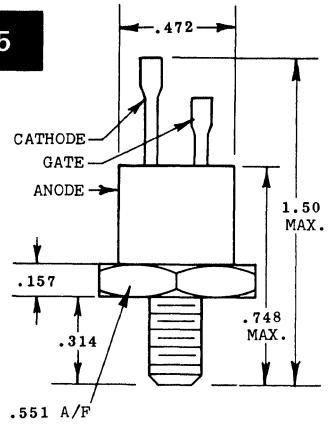

S157

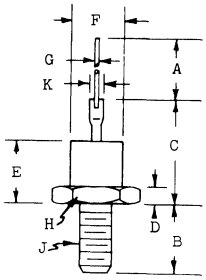

	A	B	C	D	E	F	G	H	J	K
S157	1.550	.422	.550	.075	.320	.244	.029	.425	10-32	.100
	MIN.	.452	.650	.125	.370	.260	.035	.437	UNF-2A	MAX
S157a	2.040	.433	.710	.126	.394	.256	.032	.472	M5	
			MAX		MAX				PO.9	

S158

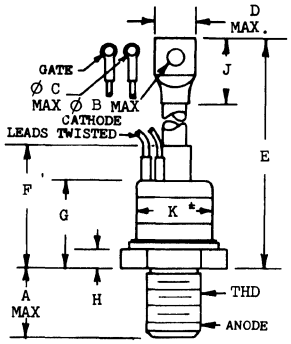

	A	BØ	CØ	D	E	F	G	H	J	K	THD
S158	1.63	.380	.160	.850	9.500	2.56	1.47	.200	1.21	1.42	UNF-2A
					10.500	3.00	1.87	.560	1.29	1.50	
S158a	1.09	.421	.300	.990	9.500	2.56	1.47	.200	1.21	1.42	3/4-16UNF-2A
					10.500	3.00	1.87	.560	1.29	1.50	
S158b	.985	.342	.150	.750	9.500	2.56	1.47	.200	1.21	1.42	M24,P1.5
					10.500	3.00	1.87	.560	1.29	1.50	
S158c	1.10	.393	.157	.984	9.500	2.56	1.47	.200	1.21	1.42	21-12UNF-2A
					10.500	3.00	1.87	.560	1.29	1.50	
S158d	.984	.394	.150	1.02	9.65	3.94	1.42	.287			M24X1.5
		.406	.165		10.900	MAX	MAX	.319			
S158e		.394	.173	.748	10.051	2.880	1.574	.315		1.480	M24 P1.5

S164

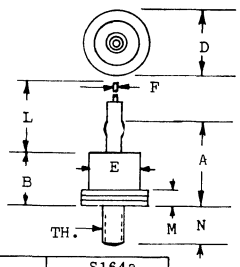

	S164	S164a
A	.625 MAX.	
B	.335±.020	.326±.019
D	.380±.012	.380±.01
E	.265±.015	.255±.01
F	.028	.028
L	1.75 MIN.	1.623 MAX.
M	.140 MAX.	.110±.013
N	.312±.02	.35±.01
TH	6-32UNC-2A	

S167

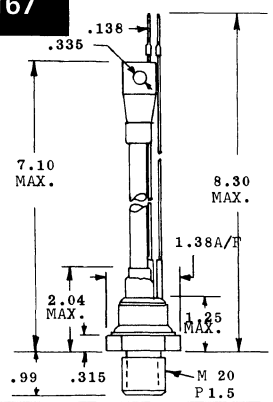

S168

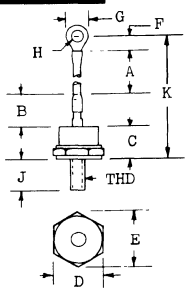

	A	B	C	D	E	F	G	H	J	K	THD
S168	5.75	.600	.450	.687	.790	.500	.500	.265	.437	7.30	1/4-28UNF-2A
S168a	4.50	1.25	.500	.600	.790	.500	.500	.265	.437	6.75	1/4-28UNF-2A
S168b				1.06	1.23	.251	.649	.267	.712	5.94	M12

S170

	A	B	C	D	E	F
S170b	.787	1.06	.315	.394	1.46	1.46
S170c			.313	.400		1.43

	G	H	J	THREAD
S170b	.032			M4
S170C	.031	1.06	1.43	M4

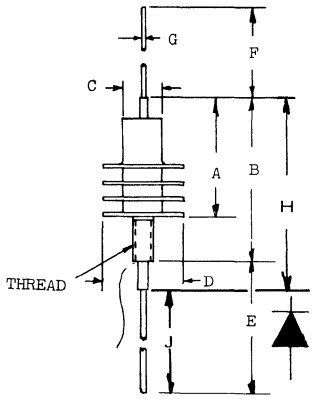

S171

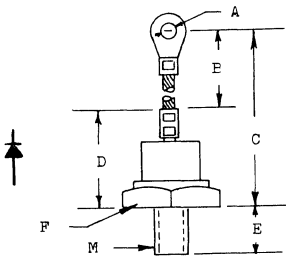

	A	B	C	D	E	F	M
S171a	.219	2.69	3.94	1.25	.688	.598	M6
S171b	.219	2.88	4.13	1.25	.688	.641	M6
S171c	.250	3.88	5.63	1.75	.875	.875	M10
S171d	.313	4.56	6.31	1.75	.625	.875	M10
S171e	.344	7.50	10.3	2.75	.875	1.25	M20
S171f	.500	8.38	11.6	3.25	1.00	1.81	M24
S171g	.263		4.72	1.12	.393		M8
S171h	.041	7.25	10.0	2.84	.708	1.06	M16x.059
S171i	.172		3.00	1.0	.468	.668	1/4-28UNF2A
	.140		3.25		.418	.664	
S171j	.204	4.01	5.11	1.10	.511		M6
S171k	.251	4.13	5.31	1.20	.551		M8
S171m	.330	4.52	6.29	1.77	.708		M12
S171n	.326	4.33	6.49	2.16	.787		M16x.059
S171p	.413	7.87	1.02	2.36	.787		M24x.059
S171q	.263		4.72	1.12	.393		M8
S171r	.204	2.36	3.46	1.10	.708		M6
S171s	.208	4.05	5.11	1.06	.511		M6
S171t	.208	4.17	5.31	1.14	.551		M8
S171u	.330	5.39	7.48	1.69	.708		M12
S171v	.330	4.60	6.29	1.69	.708		M12
S171w	.330	5.39	7.46	2.08	.787		M16x.059
S171x	.413	6.65	9.05	2.40	.787		M24x.059

S172

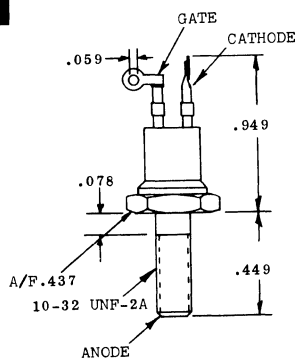

15. OUTLINE DRAWINGS

IN DRAWING NUMBER SEQUENCE

S173

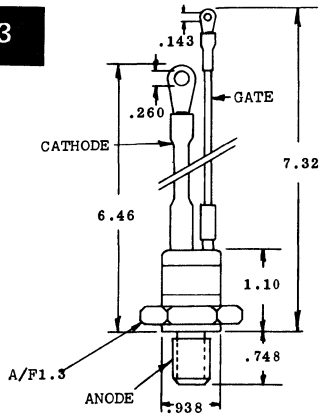

S175

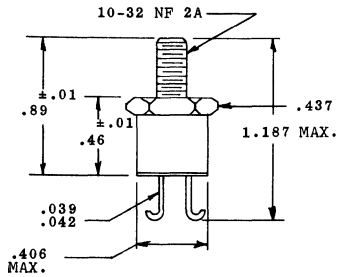

S179

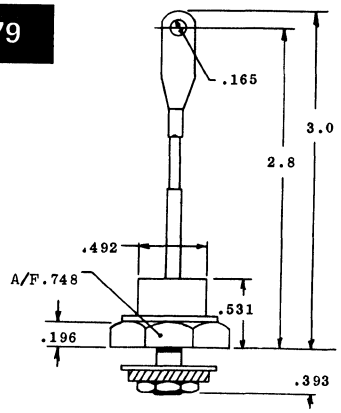

S181

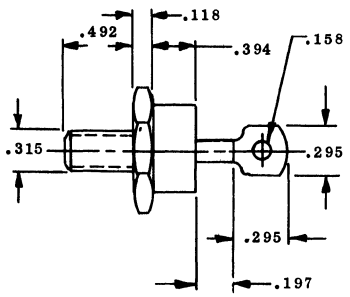

S182

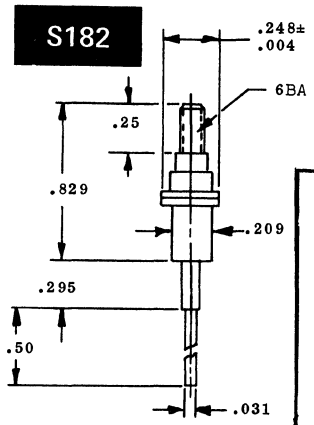

S183

	A	B	C	D	E
S183	.748	1.37	5.10	.748	.708
S183a	.511	.984	4.68	.669	.472
S183b	.551	.984	4.44	.669	.472

	F	G	H	J
S183	.787	.275	1.37	.315
S183a	.748	.157		.244
S183b	.826	.157		.255

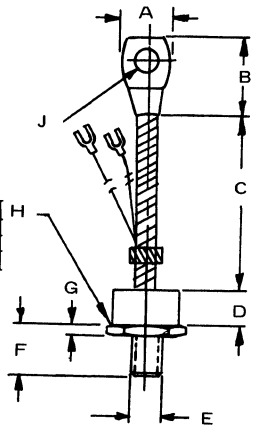

S184

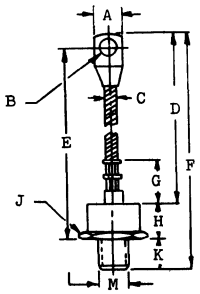

	A	B	C	D	E	F	G	H	J	K	M
S184	.75	.33	.35	6.38	6.95	6.20	.75	.984	1.38	.984	.71
S184a	.55	.26	.35	5.54		6.93		.669	1.06	.590	.47

S185

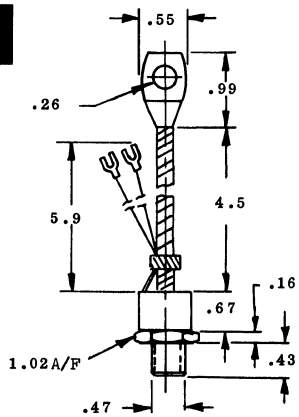

S186

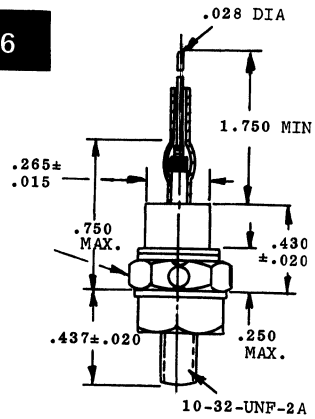

S187

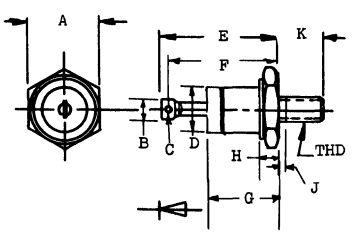

	A	B	C	D	E	F	G	H	J	K	THD
S187	.437				1.03					.452	10-32UNF-2A
S187a	.444	.196	.070	.283	.80	.728	.405	.145	.062	.452	M5
S187b	.196		.086		.669						M4

15. OUTLINE DRAWINGS

IN DRAWING NUMBER SEQUENCE

S189

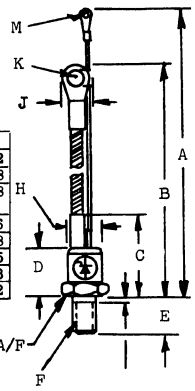

	A	B	C	D	E	F	G	H	J	K	M
S189	7.30	6.30	1.46	.990	.720	M12	1.06	.890	.630	.321	1.142
S189a	7.30	6.30	1.85	1.18	.790	M12	1.06		.630	.315	1.118
S189b	7.88	5.84	2.24	1.26	.810	M20 P15		1.01	.670	.354	1.208
S189c	4.50	4.50	1.60	1.02	.483	M12	1.06	.822	.374	.205	1.146
S189d	7.08	6.26	1.61		.811	M12	1.06			.267	1.118
S189e	4.92	4.92	1.57	.940	.551	M12	1.06	8.66	.500	.263	1.145
S189f	6.87	6.09	2.50		.748	M12x1.5	1.06	1.06	.299	.268	1.173
S189g	6.900	6.176	1.670	.886	.708	M12 P1.5	1.060	.906	.552	.256	.122

S191

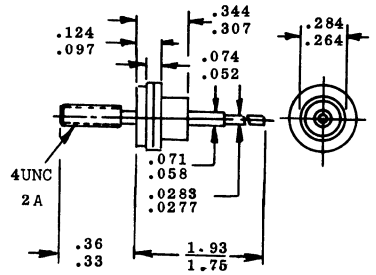

S193

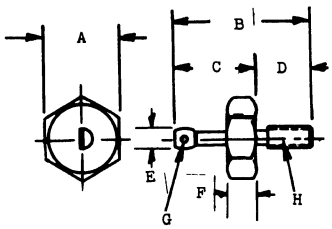

	A	B	C	D	E	F	G	H
S193	.429 .445	.945	.472	.334 .374			.047	#10-32UNF-2A
S193a	.421 .445	1.070	.669	.425 .465	.197	.260 .291	.062 .079	M5X.80

S199

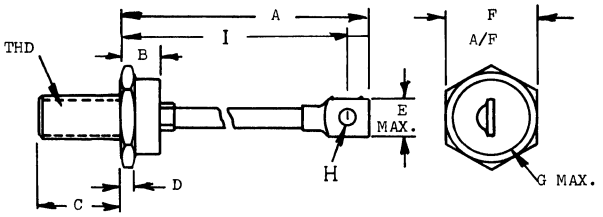

	A	B	C	D	E	F	G	H	I	THD
S199	5.75	.570	.500	.125	.590	1.25	1.20	.281		10 - 32
S199a	7.10	1.10	1.00	.375	.640	1.75	1.72	.343		3/4-16UNF
S199b	7.10	1.00	1.00	.375	1.00	2.00	1.94	.531		3/4-16UNF
S199c	7.00	1.00	1.00	.375	1.14	2.25	2.20	.562		3/4-16UNF
S199d	6.11		.590	.315			1.02	.335		.394⌀X.039
S199e		1.25 MAX	1.031 1.094	.344	.82 TYP	1.687 1.047	1.47	.53 .58	7.5 MAX	
S199f			.078	.169	.649	1.082	1.06	.255	6.10	M12
S199g			.866	.251	.889	1.515	1.42	.405	7.87	M20
S199h			.799	.275	1.04	2.145	2.05	.405	8.66	M24
S199j		.125 MAX	1.031 1.094	.344	.990 MAX	1.687 1.647	1.47	.300 .420	7.75 8.25	
S199k		1.25 MAX		.344	.990 TYP	1.647 1.687	1.47	.390 .420	7.75 8.25	3/4-16UNF-2A
S199m	5.00 5.50	.540 .705	.593 .657	.115 .135	.612	1.23 1.26	1.20	.266 .296		3/8-24-UNF-2A

S201

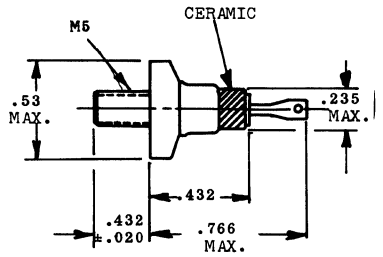

S203

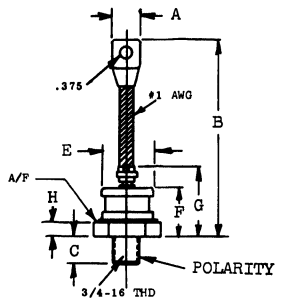

	A	B	C	D	E	F	G	H	POLARITY	THD
S203	.840	5.31	.813	1.50	1.06	.687	1.44	.437		
S203a	.750	.600	.875	1.50	1.25	1.16	1.66	.281	ANODE	
S203b	.63	6.3	.71		.89	1.47	1.75		CATHODE	M12x.068

S204

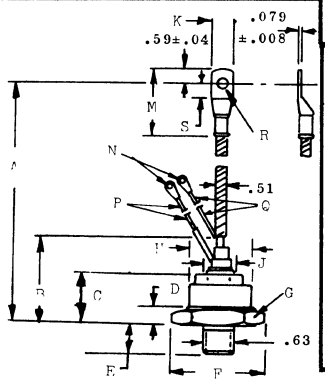

	A	B	C	D	E	F	G	H	J	K	M	N	P	Q	R	S
S204	5.19 4.81	2.13	1.24	.390	.590	1.95	1.65 A/F		.790	.790	2.35	.158			.350	.510
S204a	11.03 7.09	2.28 MAX	1.22 MAX		.729 .689	1.85 MAX		1.50 MAX		.787 MAX	2.33 MAX	.177 .073	6.91 6.87	6.28 6.24	.358 .350	.512 MIN

S206

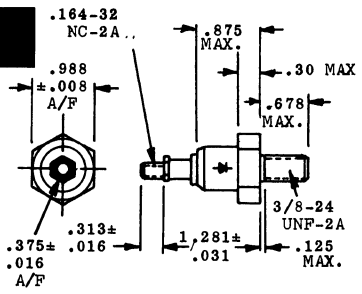

S210

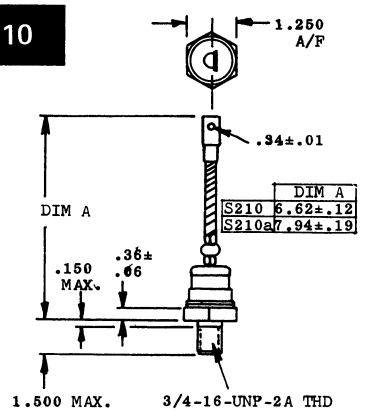

DIM A	
S210	6.62±.12
S210a	7.94±.19

15. OUTLINE DRAWINGS

IN DRAWING NUMBER SEQUENCE

S211

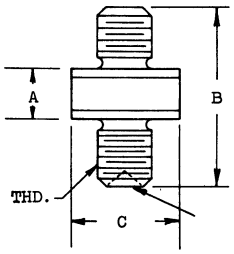

	A	B	C	THD	TERM. 1
S211	.082	.280	.149	M2	CATHODE
S211a	.079	.276	.138	M2	

S212

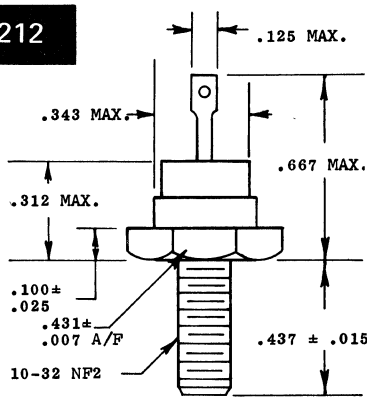

S215

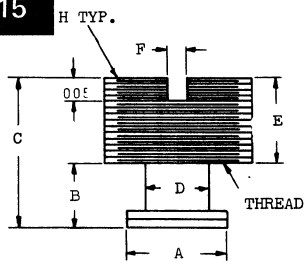

S215 - has screw driver slot (F & G)
S215a - has spline socket - 6 teeth (H)

	A	B	C	D	E	F	G	H	THD.
S215	.125	.055	.185		.130	.625	.035		2-80UNF-2A
S215a	.130	.055	.150	.083				.050	3-48UNC-2A
S215b	.130	.100	.690 .700		.590	.031	.039		6 ISO
S215c	.230	.134	1.00 1.02		.866	.039	.059		8x100 ISO

S218

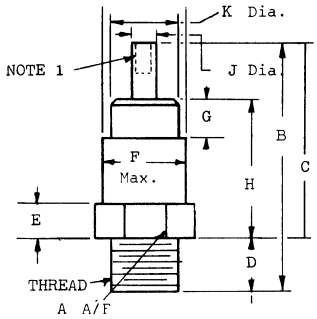

NOTE 1 - S218a has 10-32 TAP, .3125 min. deep

	A	B	C	D	E	F	G	H	J	K	THD.
S218	.248	.790	.600	.190	.122	.240	.122	.420	.093	.212	10-32UNF
S218a	1.25	3.08	2.25	.828	.425						3/4-16UNF-2A

S220

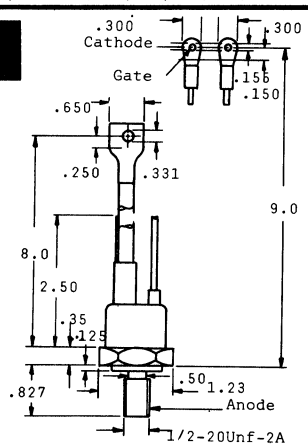

S221

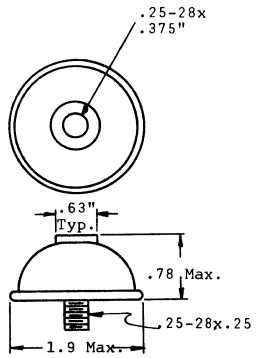

S223

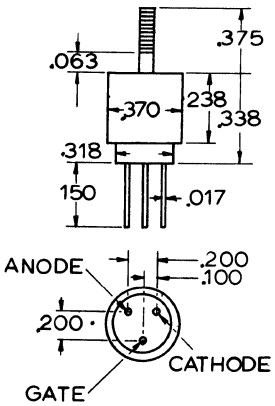

S225

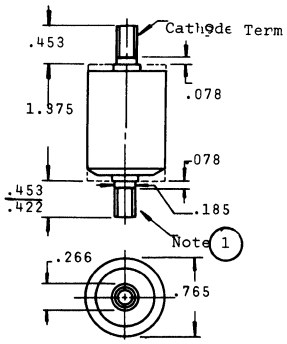

1. 2 BA thread; two plain washers, one crinkle wahser and nut supplied on each stud.

S228

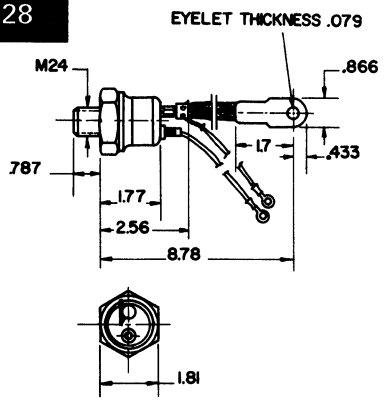

S230

	A	B	C
S230	GATE	CATHODE	ANODE
S230a	GATE	MAIN TERM. 1	MAIN TERM. 2

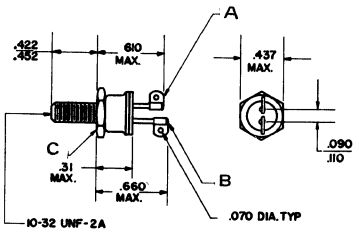

S235

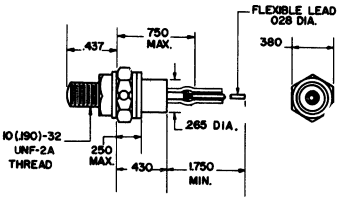

15. OUTLINE DRAWINGS

IN DRAWING NUMBER SEQUENCE

S236

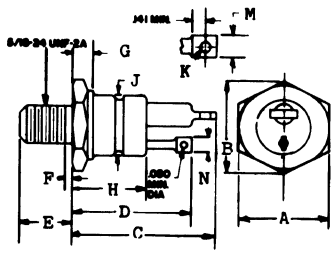

	A	B	C	D	E	F	G	H	J	K	M	N	THD
S236	.734	.050	1.208	.927	.485	.090	.125	.750	.688	.140	.227	.125	5/16-24UNF-2A
	.750	MIN	1.448	1.167	.515	MAX	.205	MAX	MAX	MIN	.277	.175	
S236a	.551	.055	1.020	.787	.409		.133	.511	.385	.078			M6
			MAX	MAX	.440			MAX					

S237

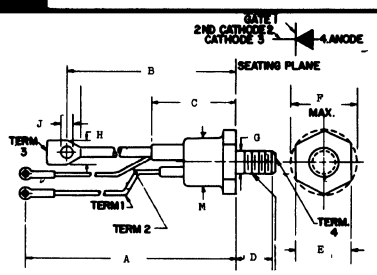

	A	B	C	D	E	F	G	H	J	K	M
S237	8.10	8.10	2.25	1.08	1.25	1.44	.749	.755	.344	3/4-16UNF-2A	
S237a	8.23	6.61	2.28	.787	1.26	1.46		.630	.335	3/4-16UNF-2A	
S237b	6.65	5.82	2.50	.826	1.06		.500	.649	.326	1/2-20UNF	1.00
S237c	6.69	5.71	2.36	.689	1.02			.630	.272	M12x.059	
	7.48	6.50	MAX	.728	1.06			MAX	.287		
S237d	7.48	5.71	2.76	.846	1.40			.787	.390	M20x.059	
	8.28	0.50	MAX	.886	1.42			MAX	.413		
S237e	8.140	6.530	2.280	.787	1.260	1.460		.630	.334	M20 P1.5	1.660
S237f	7.280	6.220	1.810	.708	1.060	1.230		.472	.252	M12 P1.5	1.040
S237g	10.6	9.25	2.99	.787	1.81			.905	.322	M24x.059	1.49

S238

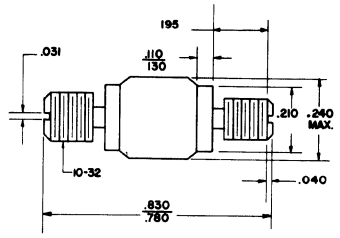

S241

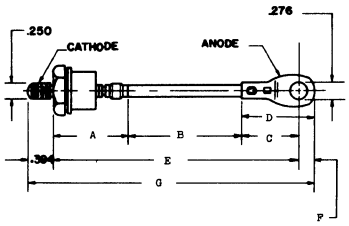

	A	B	C	D	E	F	G
S241	1.10	1.77	.865	1.00	3.74	.236	4.38
S241a	1.26	2.52		.757			4.96

S245

	A	B	THD.
S245	.865	1.06	M12
S245a		1.26	.630

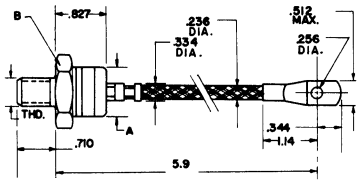

S246

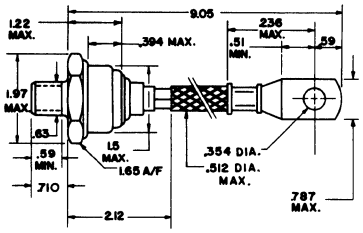

S247

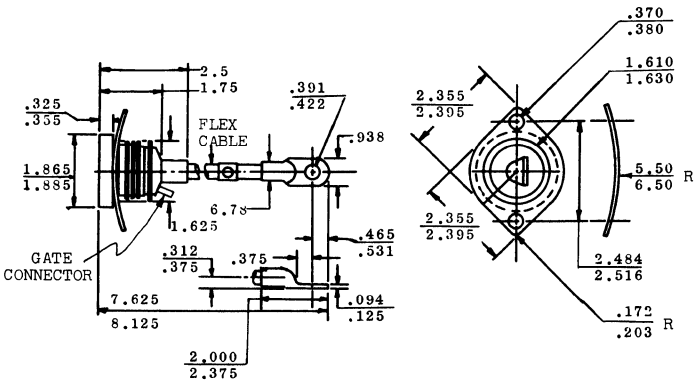

S247a includes Gate Connector.

S249

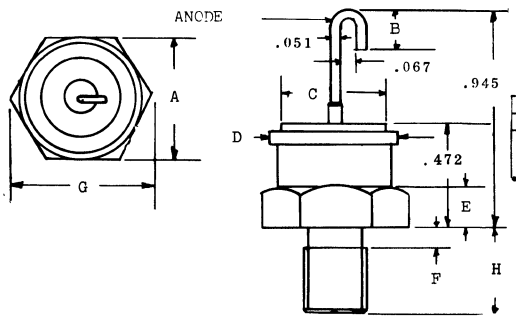

	A	B	C	D	E	F	G	H
S249	.670	.197	.492	.630	.197	.099		.433
S249a	.551	.177		.511	.157	.078		.433
S249b	.551	.177		.425	.157		.638	.472
	.670	.197		.630	.197		.772	
	TYP	TYP		TYP	TYP		TYP	

S250

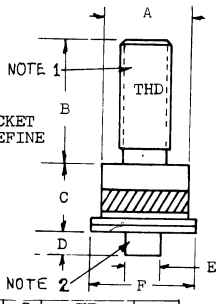

S250d NOTE 1 - SPLINE SOCKET
NOTE 2-- PORTION DEFINE
BY D & E OMITTED

	A	B	C	D	E	F	THD	NOTE
S250	.225	.321	.170	.065	.082	.246	M3.5	
S250a	.080	.145	.062	.023	.035	.102	M3.5	
S250b	.173	.276	.099	.059	.079	.239	M3.0	
S250c	.209	.374	.169	.059	.079	.260 MAX	M3.5	
S250d		.320	.131			.265	6-40UNF-2A	1,2
S250e		.315	.170			.260 MAX	M3.5	2
S250f	.207 .213	.317 .323	.118 .134			.259 .267	.164-32NC 2A	1,2

15. OUTLINE DRAWINGS

IN DRAWING NUMBER SEQUENCE

S251

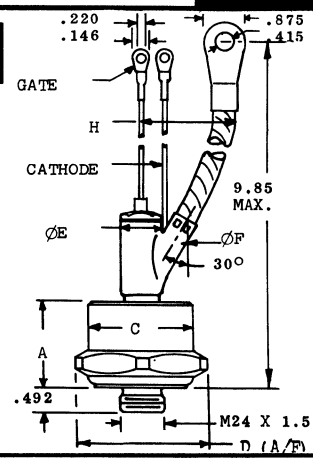

	A	B	C	D(A/F)	ØE	ØF	G(A/F)	H
S151	2.19	3.54	1.28	1.61	.666	.431	.550	1.10
S151a	1.85	3.82	1.97	2.17	.790	.520	.670	1.30

S258

	A	B	C	D	E
S258	.415	.655	.800	.442	.070
S258a	.425	.700	.855	.453	.075

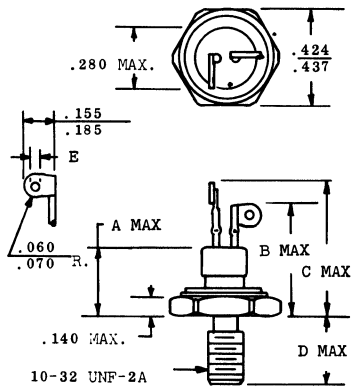

S260

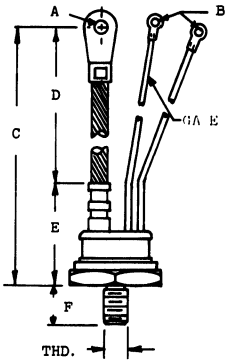

	A	B	C	D	E	F	THD
S260	.330	.170	6.40	4.13	2.40	.710	M16x.059
S260a	.248	.125	6.29	4.72	1.57	.708	M12
S260b	.326	.125	6.49	4.33	2.16	.787	M16x.059
S260c	.330	.125	6.29	4.60	1.69	.708	M12
S260d	.330	.125	7.48	5.39	2.08	.787	M16x.059

S262

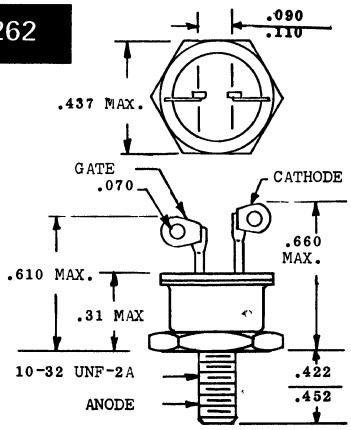

S263

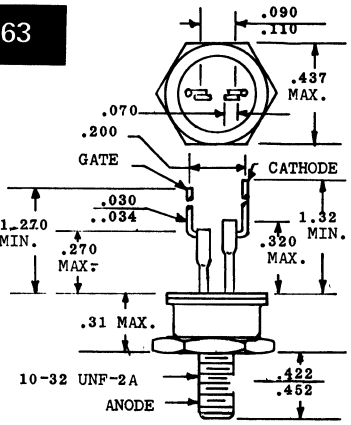

S264

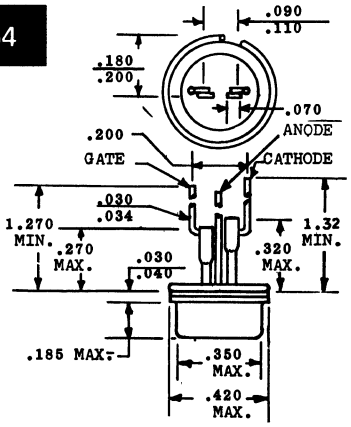

S266

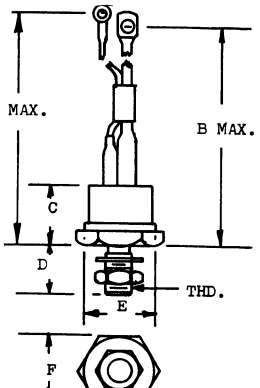

	A	B	C	D	E	F	THD.
S266	6.50	5.81	.797	.437	.671	.688	1/4-28
S266a	6.81	6.19	.860	.625	1.06	1.13	3/8-24

S267

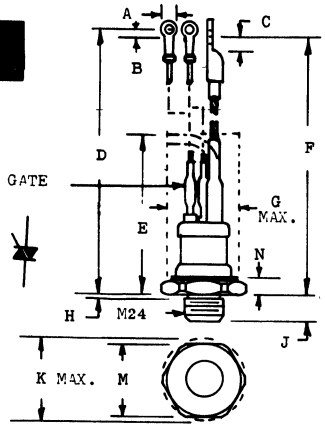

	A	B	C	D	E	F	G	H	J	K	M	N
S267	.229	.157	.339	6.60	3.70	8.01	1.60	.129	.826	1.75	1.65	.393
S267a	.173	.157	.299	9.70	4.53	9.37	1.77	.129	.866	2.01	1.61	.433
S267b	.299	.157	.315	7.90	2.34	7.50	1.38	.130	.864	1.65	1.43	.315
S267c	.236	.118	.472	6.06 6.35	2.75	6.10 6.45	1.10	.078	.787		.122 .126	.440

S268

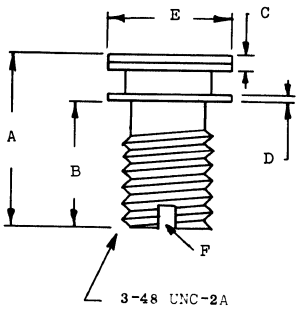

	A	B	C	D	E	F
S268	.212	.137	.023	.011	.123	SCREWDRIVER SLOT
S268a	.225	.107	.025	.030	.148	SPLINE SOCKET - 6 TEETH
S268b	.183	.126 .136			.119 .125	SCREWDRIVER SLOT

S277

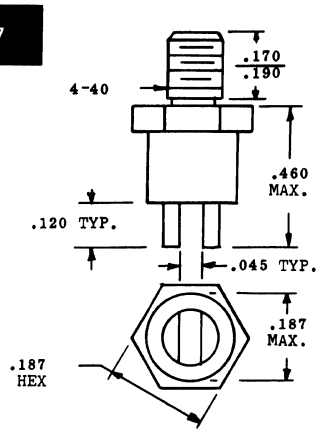

S278

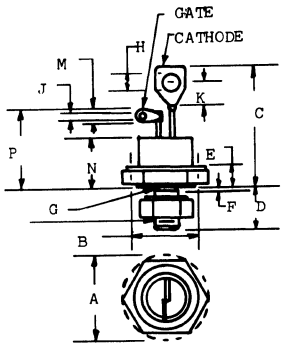

	A	B	C	D	E	F	G	H	J	K	M	N	P
S278		.550	1.200	.422 .453	.100 .50	.089	.193 .250	.150 .162	.040	.120			
S278a	.672 .686	.620 .630	.779 .840	.422 .453	.155 .190	.090	.193 .250	.140 .150	.068 .073		.115 .135	.382 .430	.625 .718

S279

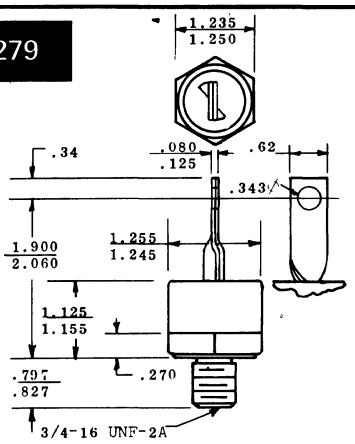

S280

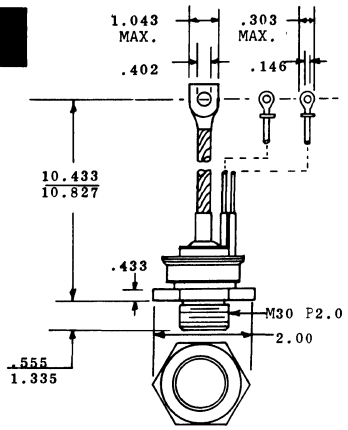

S281

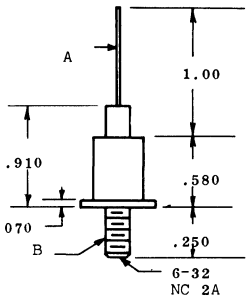

	A	B
S281	CATHODE	ANODE
S281a	ANODE	CATHODE

S284

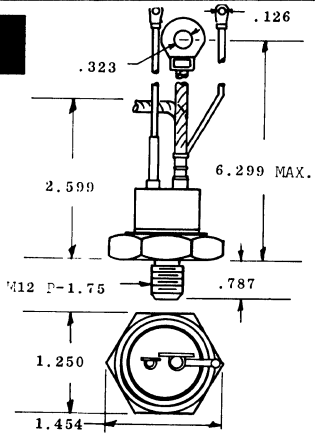

S286

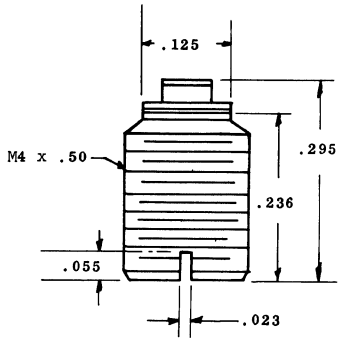

S287

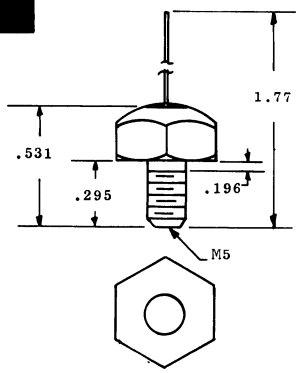

S288

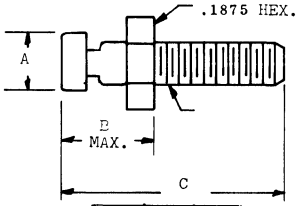

	A	B	C
S288	.150	.160	.335
S288a	.100	.230	.460

S289

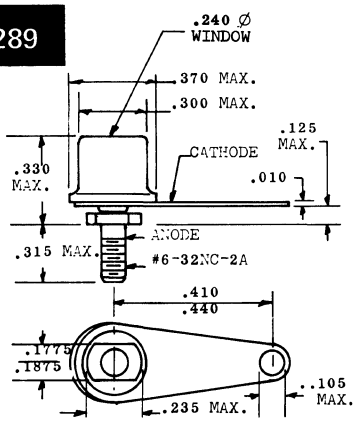

S290

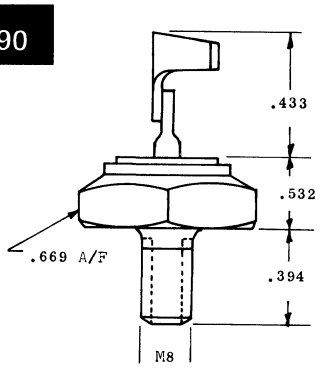

15. OUTLINE DRAWINGS

IN DRAWING NUMBER SEQUENCE

S291

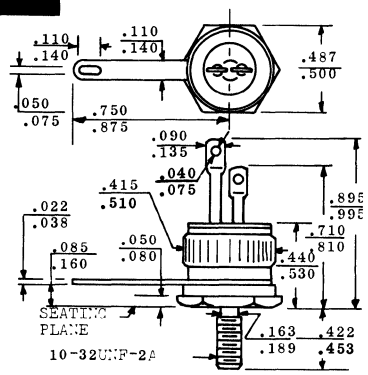

S292

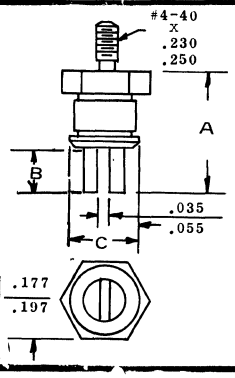

	A	B	C
S292	.420 .460	.100 .140	.163 .187
S292a	.500 MAX	.120	

S293

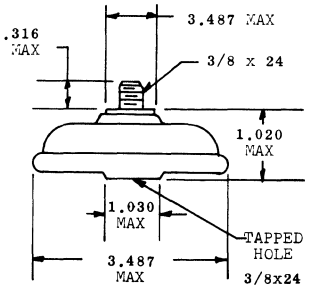

S294

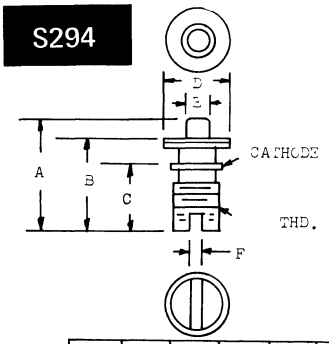

	A	B	C	D	E	F	THD
S294	.245	.183	.128 .138	.119 .125	.060 .064	.020	#3-48UNC-2A
S294a	.262	.200	.138	.120	.062	.020	3-48

S295

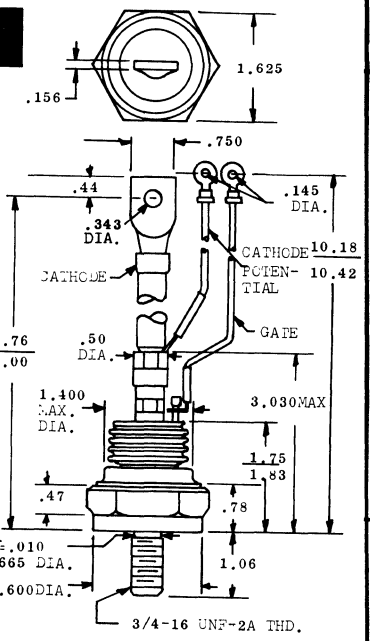

S296

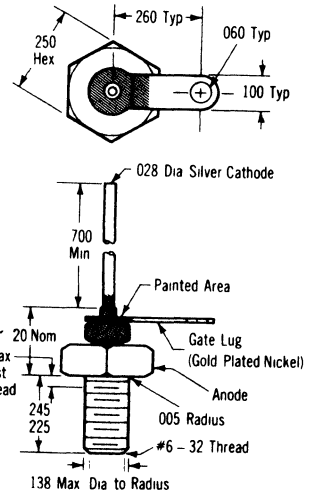

S300

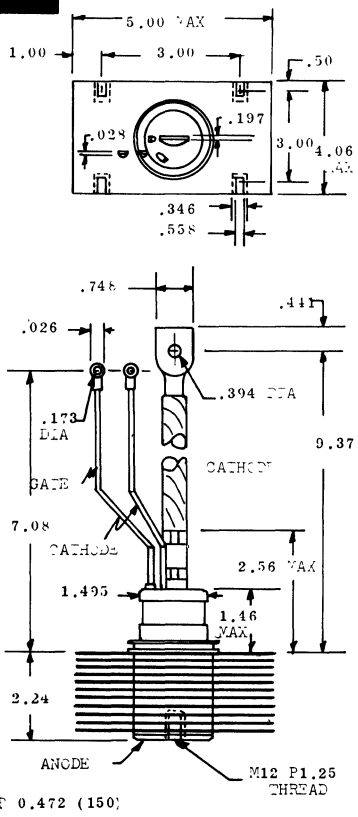

S298

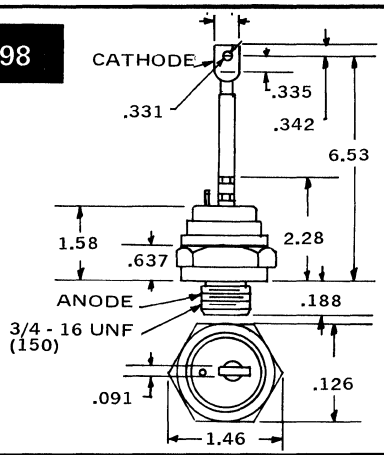

S301

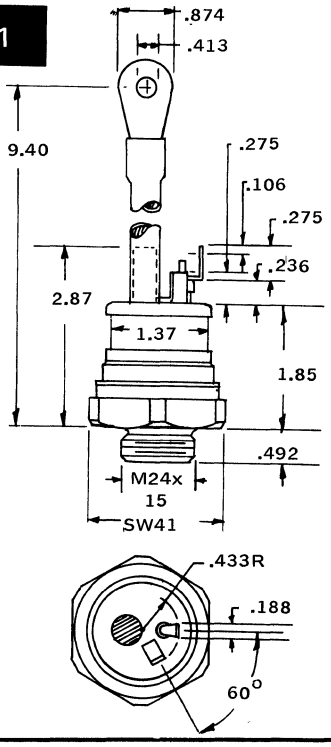

S302

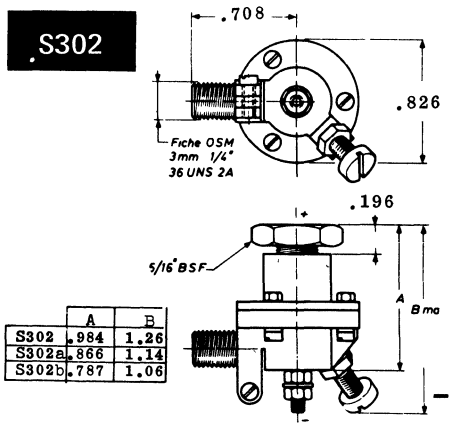

	A	B
S302	.984	1.26
S302a	.866	1.14
S302b	.787	1.06

15. OUTLINE DRAWINGS

IN DRAWING NUMBER SEQUENCE

S303

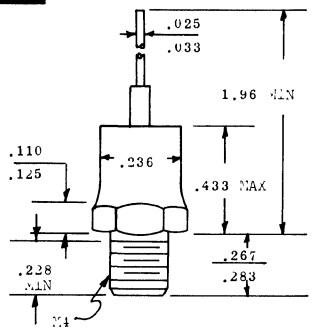

S304

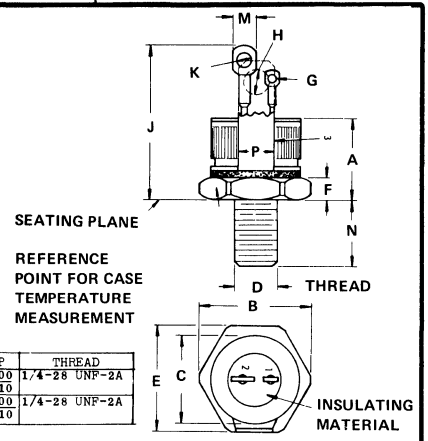

	A	B	C	D	E	F	G	H	J	K	M	N	P	THREAD
S304	.673	.604	.501	.222	.551	.175	.058	.138	1.05	.080	.155	.422	.200	1/4-28 UNF-2A
	MAX	.614	.505	.226	.557	.185	.068	.148	MAX	.090	MAX	.452	.210	
S304a	.673	.604	.501	.222	.551	.175	.058	.138	1.29	.125	.210	.422	.200	1/4-28 UNF-2A
	MAX	.614	.505	.226	.557	.185	.068	.148	MAX	.165	.230	.452	.210	

S305

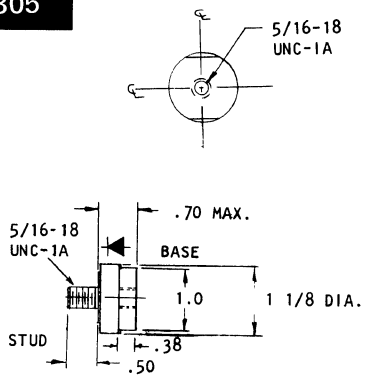

S306

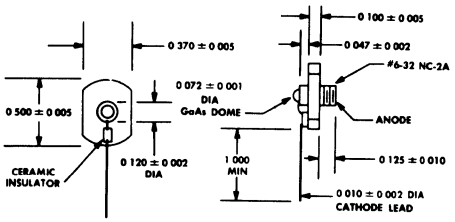

S307

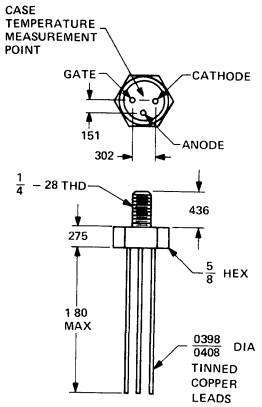

S308

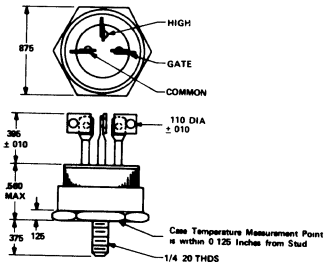

S309

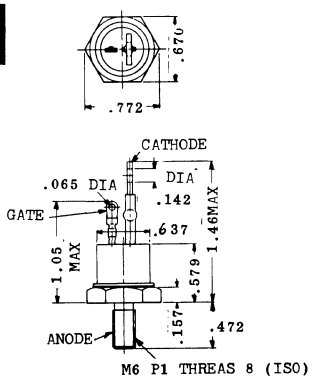

S310

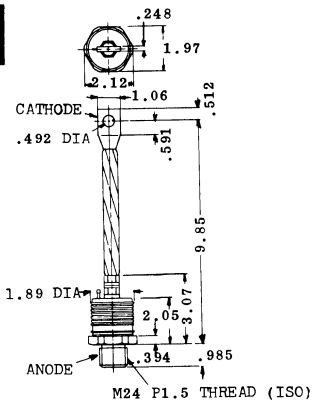

S312

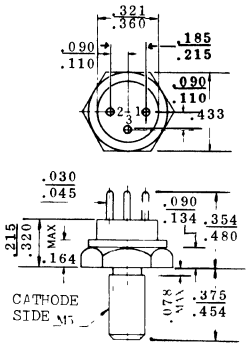

S313

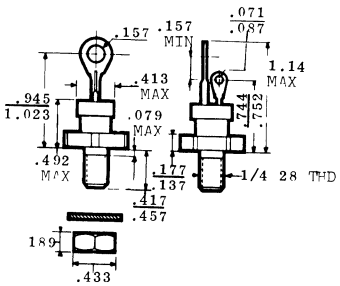

15. OUTLINE DRAWINGS

IN DRAWING NUMBER SEQUENCE

S314

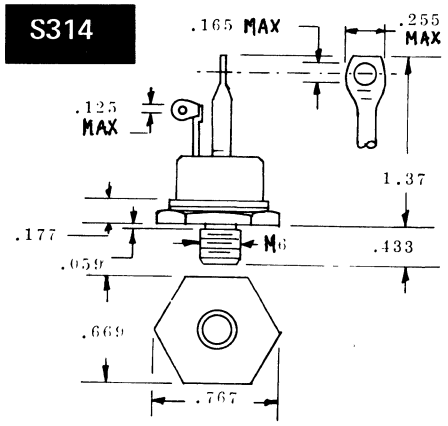

S315

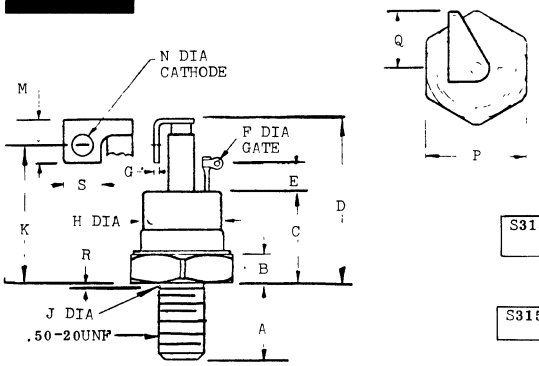

	A	B	C	D	E	F	G	H
S315	.797 / .827	.350 MAX	.874 / 1.03	1.75 MAX	.312 MIN	.060 / .075	.058 / .070	.840 / .910

	J	K	M	N	P	Q	R	S
S315	.463 / .498	1.50 MAX	.445 / .485	.198 / .212	1.04 / 1.06	.590 / .640	.080 MAX	.385 / .415

S316

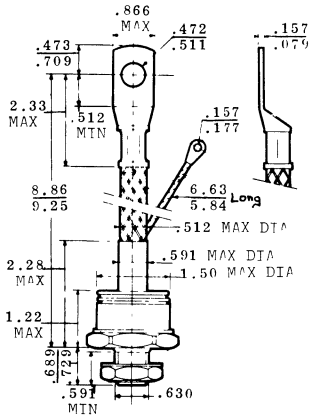

S317

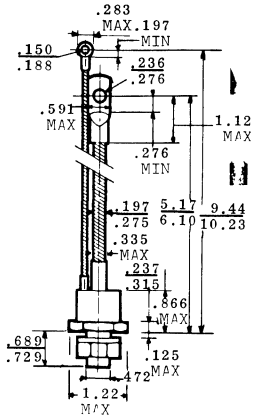

S318

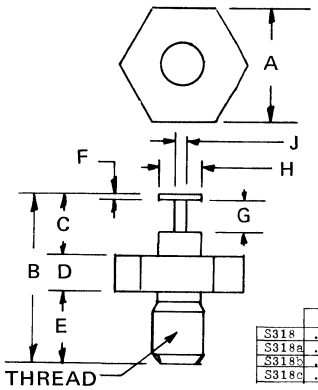

	A	B	C	D	E	F	G	H	J	THREAD
S318	.313	.630	.170	.160	.300	.020	.090	.100	.050	6-32NC3A
S318a	.438	.760	.170	.150	.438	.020	.090	.100	.050	10-32UNF-3A
S318b	.438	.848	.260	.150	.438	.035	.090	.150	.100	1/4-28NF-3A
S318c	.875	.848	.260	.150	.438	.035	.090	.150	.100	1/4-28NF-3A

S319

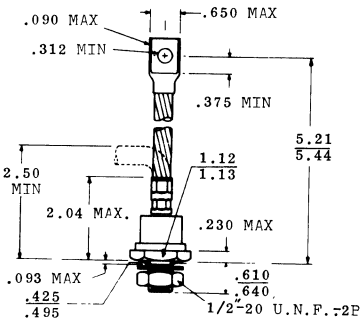

S320

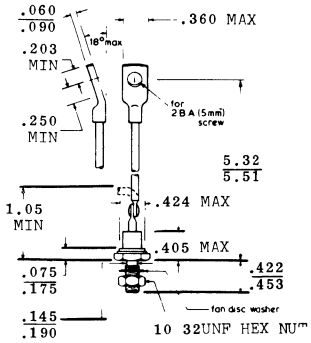

S321

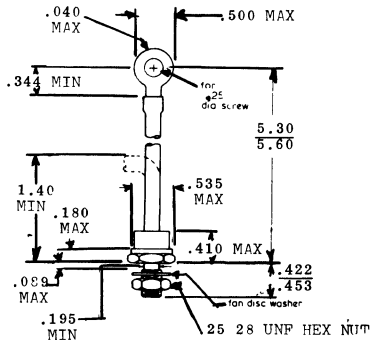

S322

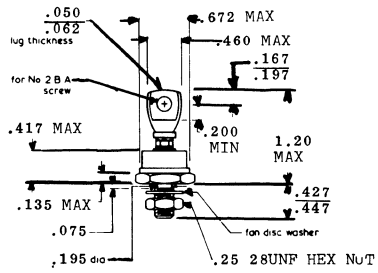

15. OUTLINE DRAWINGS

IN DRAWING NUMBER SEQUENCE

S323

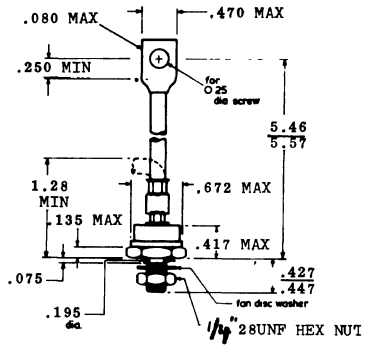

S324

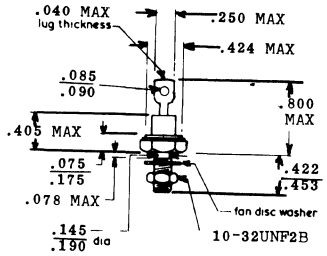

S325

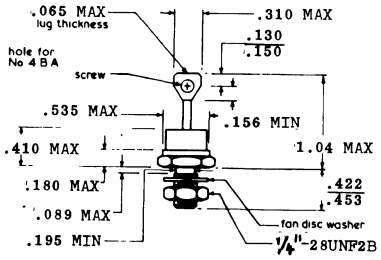

S328

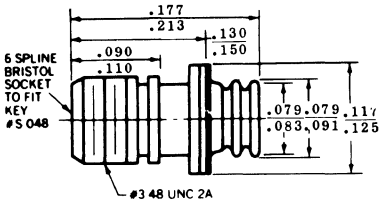

S329

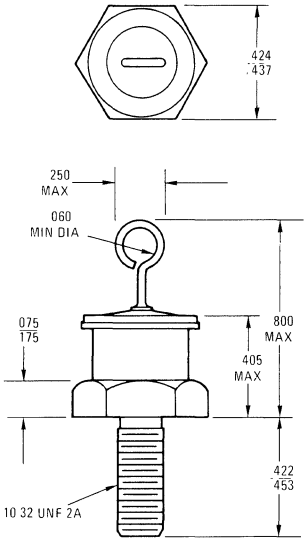

S330

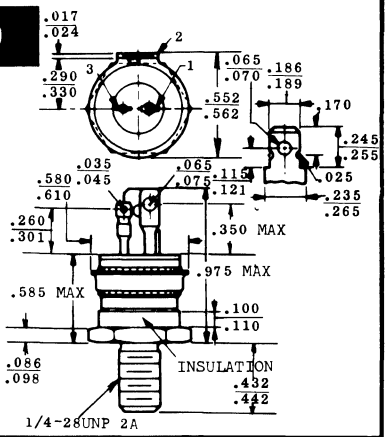

S331

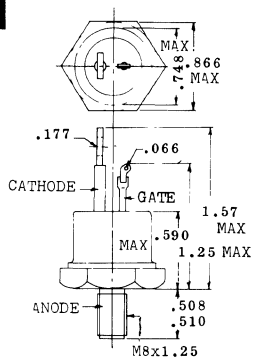

S332

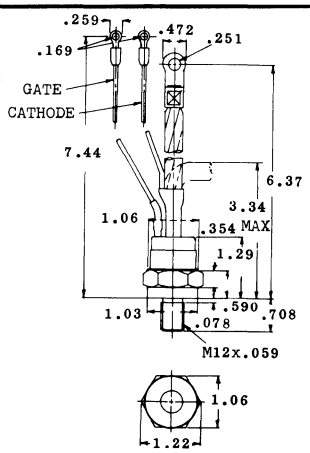

S333

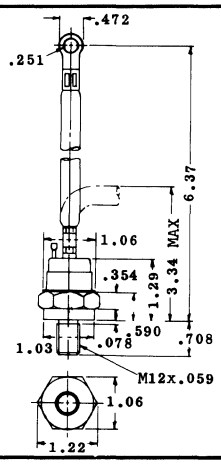

S334

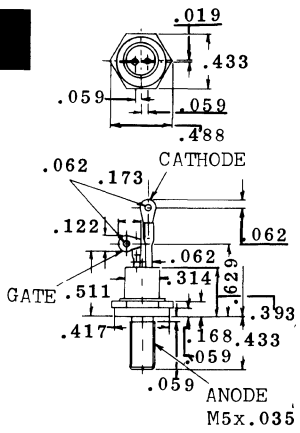

S335

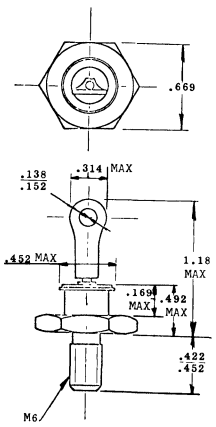

S336

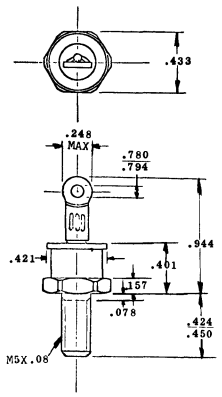

S337

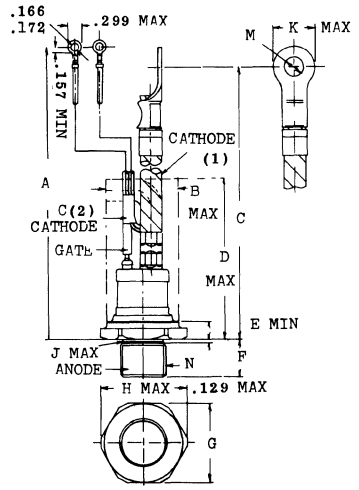

	A	B	C	D	E	F	G	H	J	K	M	N
S337	8.35 / 9.07	1.57	7.95 / 8.57	3.54	.393	.748 / .826	1.60 / 1.61	1.77	.866	.944	.398 / .428	M24x .059
S337a	7.56 / 8.18	1.37	7.17 / 7.79	3.23	.314	.709 / .783	1.40 / 1.41	1.65	.708	.708	.330 / .345	M20x .059
S337b	9.13 / 9.44	1.77	8.74 / 9.36	4.52	4.33	.787 / .865	1.62 / 1.81	2.00	.866	1.01	.398 / .428	M24x .059

S338

	A	B	C	D	E	F	G	H	J	K
S338	7.17 / 7.79	1.37	3.51	.314	.905 / .983	.708	1.65	1.40 / 1.41	.925	M20x.059
S338a	8.46 / 9.08	1.77	4.52	.433	7.87 / .865	.866	2.00	1.81	10.4	M24x.059

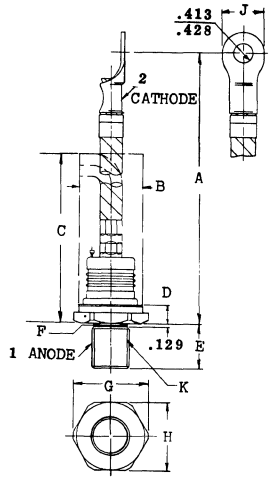

S339

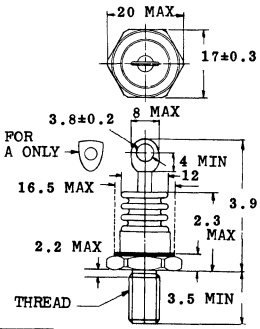

	A	THREAD
S339	.426 / .448	M6x.039
S339a	.532 / .570	M8x.049

S340

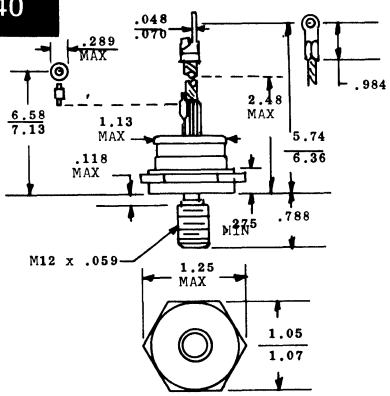

S341

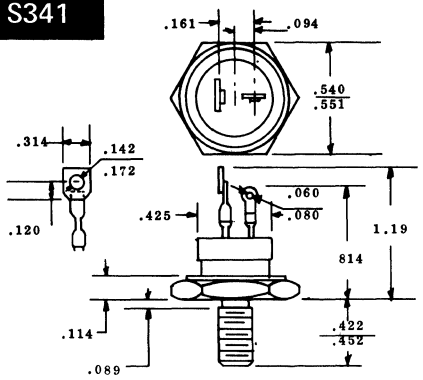

S342

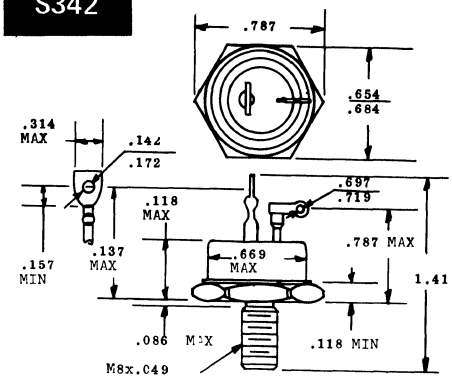

S343

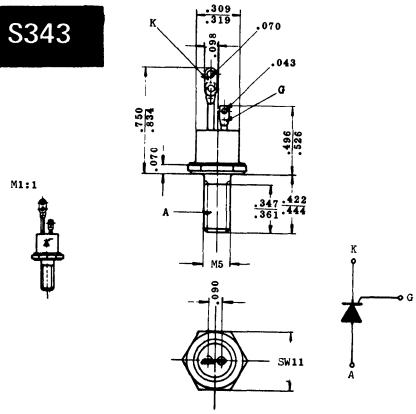

S344

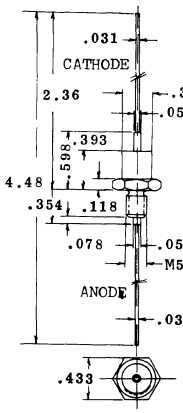

S345

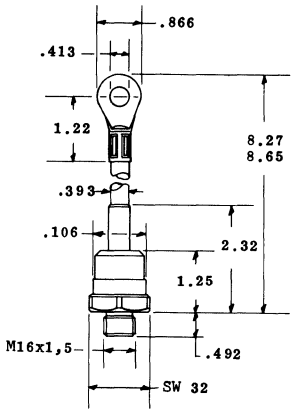

15. OUTLINE DRAWINGS

IN DRAWING NUMBER SEQUENCE

S346

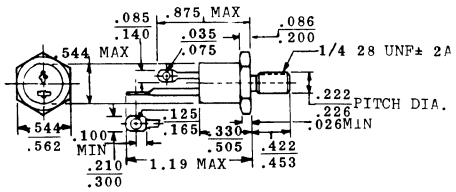

S347

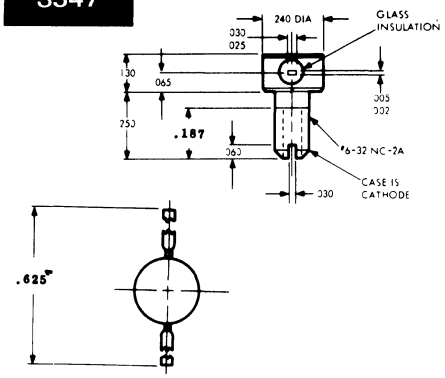

S348

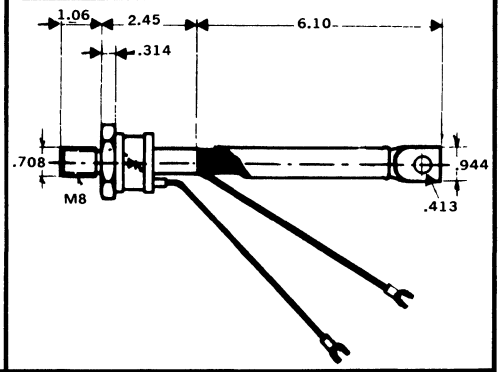

S349

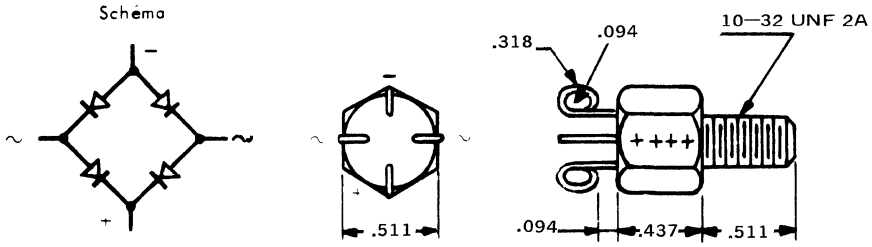

S350

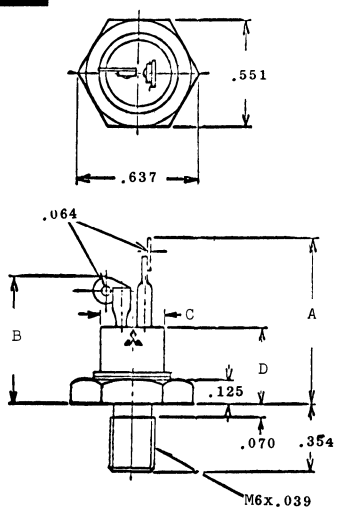

	A	B	C	D
S350	.964	.708	.334	.437
S350a	.905	.669	.314	.393

S351

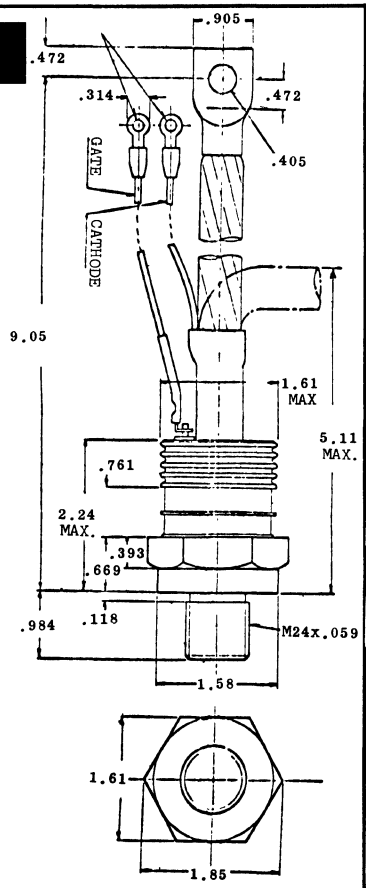

S352

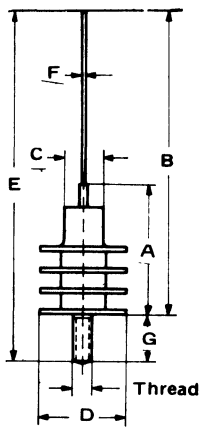

	A	B	C	D	E	F	G	THREAD
S352	.669	3.62	.315	.709	4.01	.039	.394	10-32 UNF
S352a	1.06		.313	.719		.049		M4
S352b	1.06	4.01	.315	.709	4.41	.039	.400	M4

S353

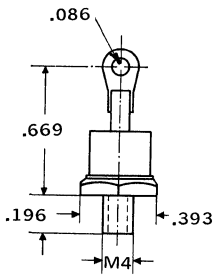

15. OUTLINE DRAWINGS

IN DRAWING NUMBER SEQUENCE

S354

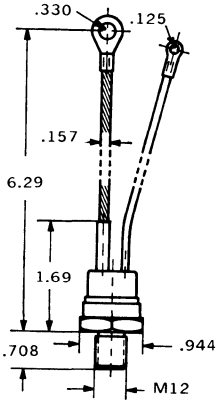

S355

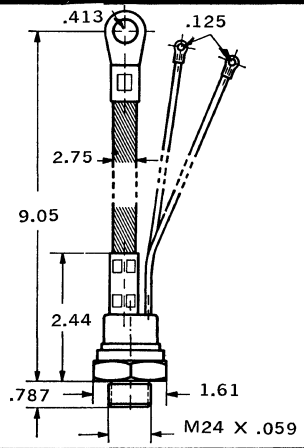

S356

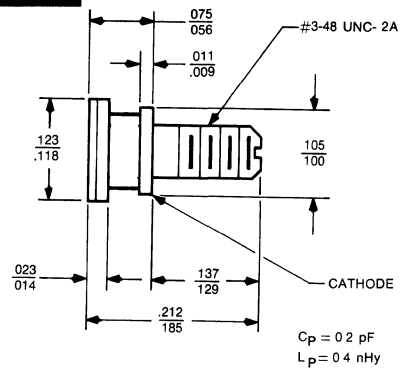

S357

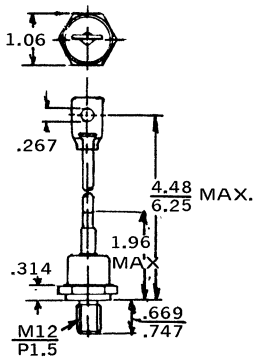

S358

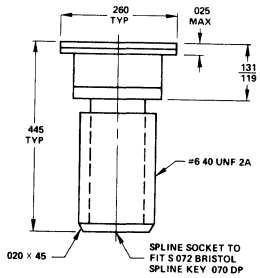

S359

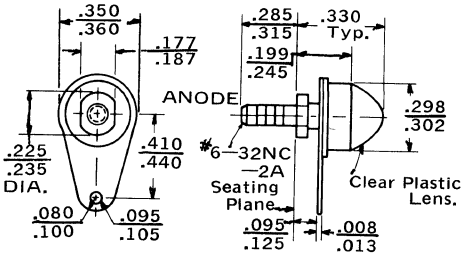

S360

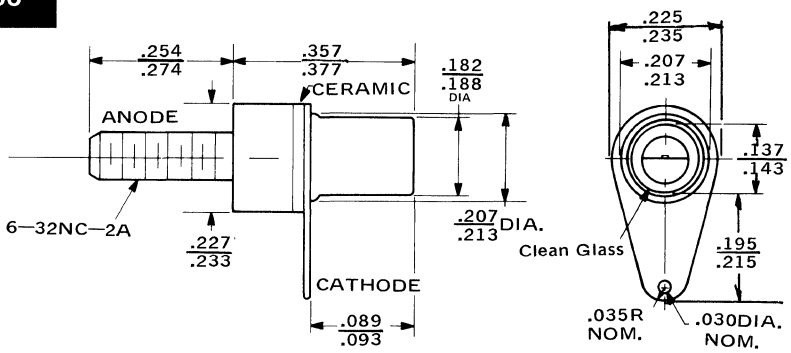

S361

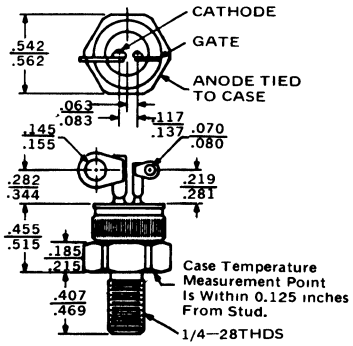

S362

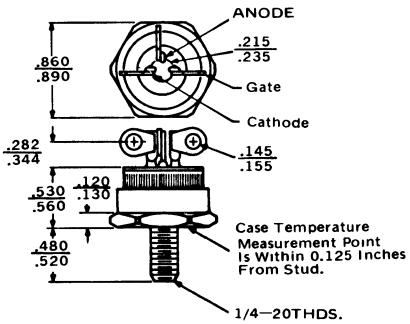

S363

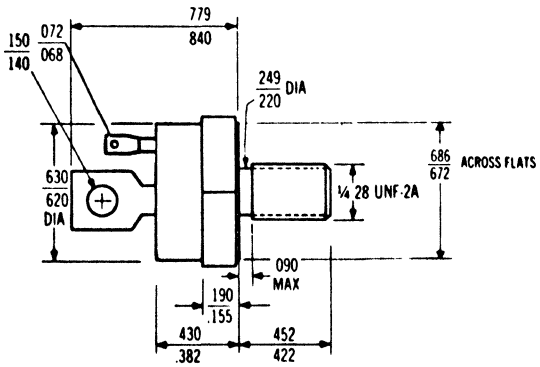

S364

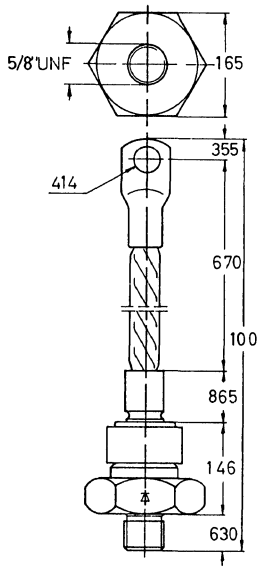

S365

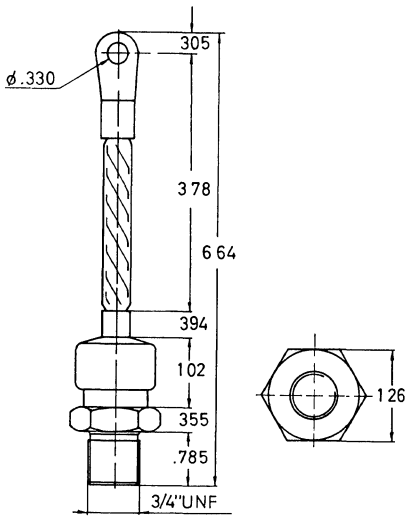

S366

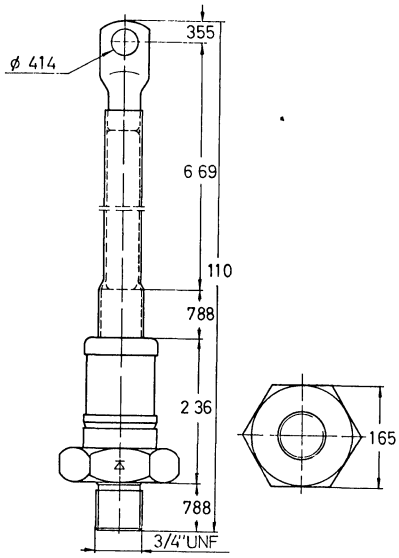

S367

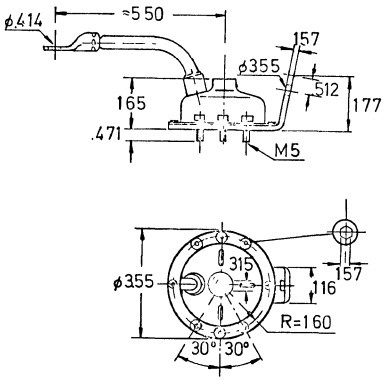

S368

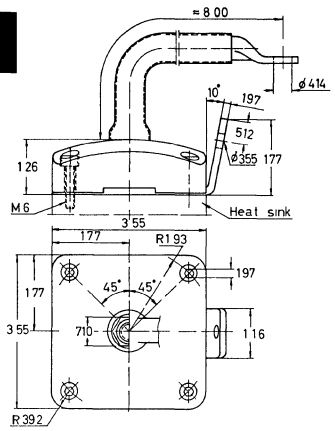

S369

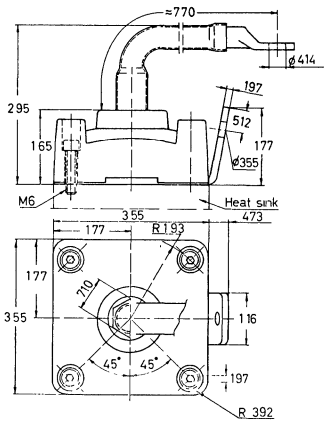

S370

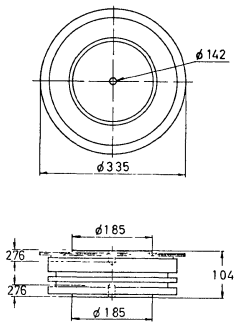

S371

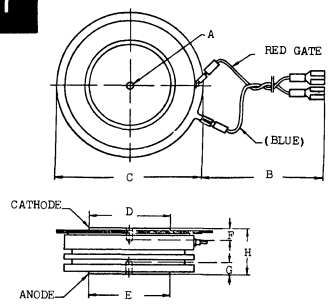

	A	B	C	D	E	F	G	H
S371	.142	13.8	3.35	1.85	1.85	.276	.276	1.04
S371a	.142	13.8	2.28	1.18	1.18	.276	.276	1.04

15. OUTLINE DRAWINGS

IN DRAWING NUMBER SEQUENCE

S372

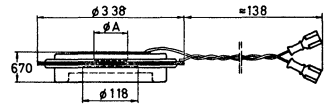

		A
S372	TYC300	.736
S372a	TY 500	.918

S373

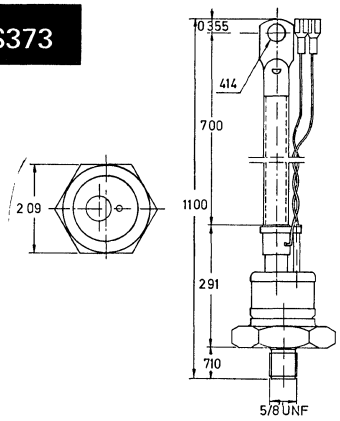

S374

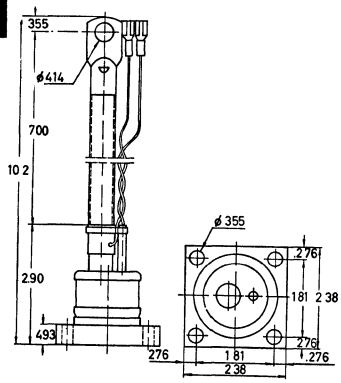

S375

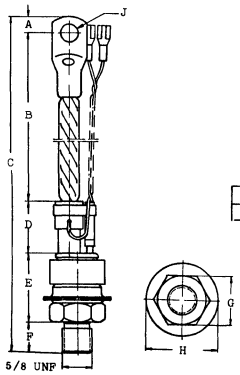

	A	B	C	D	E	F	G	H	J
S375	.355	7.00	10.8	1.18	1.58	.710	1.10	1.65	.414
S375a	.236	7.25	10.6	.905	1.58	.710	1.10	1.65	.414

TO1

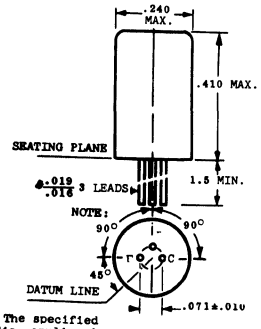

NOTE: The specified lead dia. applies in the zone between .050 & .250 from the seating plane. Between .250 & 1.5 a max. of .021 dia. is held.

TO3

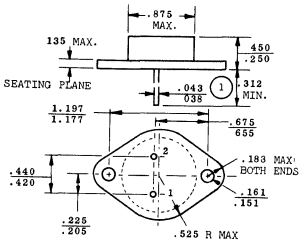

TO3 Note: 1. Two Leads

TO5

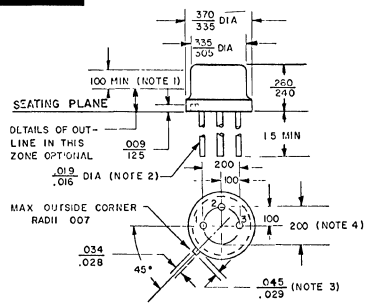

TO 5 NOTES:

1. This zone is controlled for automatic handling. The variation in actual diameter within the zone shall not exceed .010 .
2. The specified lead diameter applies in the zone between .050 and .250 from the seating plane. Between .250 and 1.5 a maximum of .021 diameter is held. Outside of these zones the lead diameter is not controlled.
3. Measured from max. diameter of the actual device.
4. Leads having maximum diameter (.019) measured in gaging plane .054 - .001-.000 below the seating plane of the device shall be within .007 of their true locations relative to a maximum-width tab.
5. The device may be measured by direct methods or by the gage and gaging procedure described on the base gage drawing.

TO8

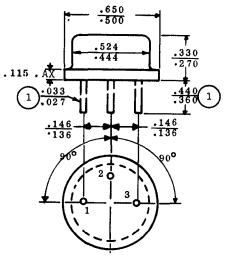

TO8 Note: 1. Three Leads

TO9

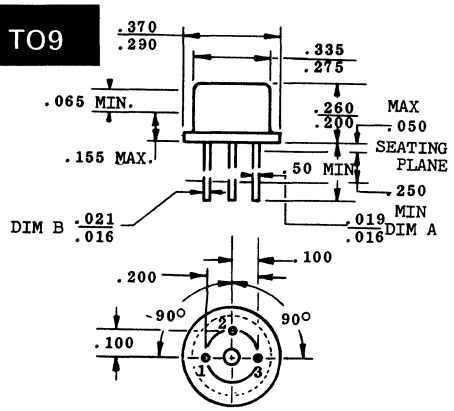

TO9 NOTES:

1. The variation in actual diameter within this zone shall not exceed .010".
2. (Three leads) (Dim. .016 min. and .019 max.) applies between (.050 max.) and (.250 min.). (Dim. .016 min. and .021 max.) applies between (.250 min.) and .5" from seating plane. Diameter is uncontrolled in (.050 max.) and beyond .5" from seating plane.
3. Leads having a maximum diameter .019" measured in a gaging plane of .054" and .001"-.000" below the seating plane of the device shall be within .007" of their true positions (T.P.).
4. Detailes of outline in this zone optional.

TO12

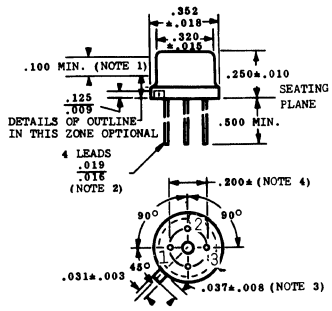

TO12 NOTES:

1. This zone is uncontrolled for automatic handling. The variation in actual diameter within this zone shall not exceed .010".
2. (Four Leads) (Dim. .016 min. and .019 max.) applies between (.050 max.) and (.250 min.). (Dim. .016 min. and .021 max.) applies between (.250 min.) and .5" from seating plane. Diameter is uncontrolled in (.050 max.) and beyond .5" from seating plane.
3. Measured from maximum diameter of the actual device.
4. Leads having maximum diameter .019" measured in a gaging plane .054" and .001"-.000" below the seating plane of the device shall be within .007" of their true positions relative to the maximum-width tab.
5. The device may be measured by direct methods or by the gage and gaging procedure described on gage drawing GS-1.
6. Tab centerline.

TO18

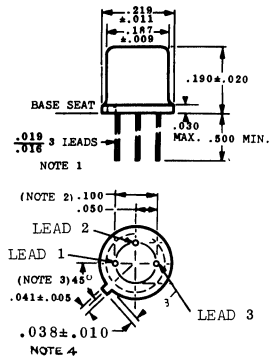

NOTES FOR TO18:

1. The specified lead dia. applies to the zone between .050 and .250 from the base seat. Between .250 and end of lead a max. of .021 is held. Outside of these zones the lead dia. is not controlled.
2. Leads having max. dia. of .019 measured in gaging plane .054 -.001,-.000 below the seating plane of the device shall be within .007 of their true positions relative to the max. tab width.
3. Index tab for visual orientation only.
4. Measured from max. dia. of the actual device.

TO33

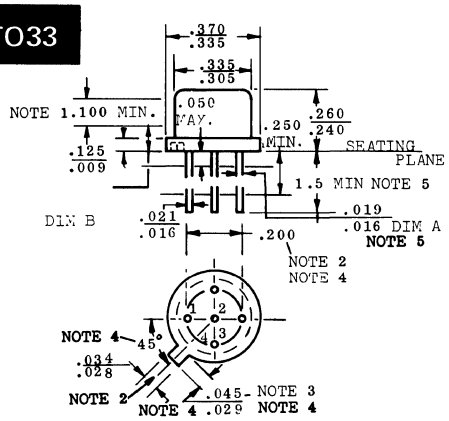

TO33

NOTES:

1. This zone is controlled for automatic handling. The variation in actual diameter within the zone shall not exceed 0.010.
2. Leads having max. dia. .019 measured in gaging plane .054 - .001 below the seating plane of the device shall be within .007 of their true locations.
3. Measured from max. dia. of the actual device.
4. The device may be measured by direct methods or by the gage and gaging procedure described on gage drawing GS-1.
5. All leads - Dia. is uncontrolled to .050 from seating plane and beyond min. tolerance of lead length (1.5 or .5) from seating plane. Dim. A applies between .050 and .250 from seating plane. Dim. B applies between .250 and min. tolerance of lead length from seating plane.

TO36

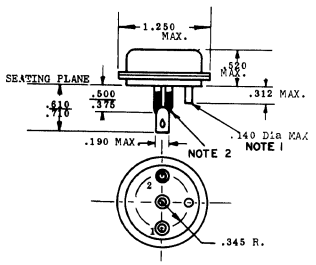

TO36

NOTES:

1. Insulated locator pin.
2. 10-32 UNF-2A. Maximum pitch diameter of plated threads shall be basic pitch diameter .1697 (4.31 MM) reference (screw thread standards for federal services 1957) handbook H28 1957 P1.

This outline does not meet the minimum criteria established by JS-10 for registration.

TO39

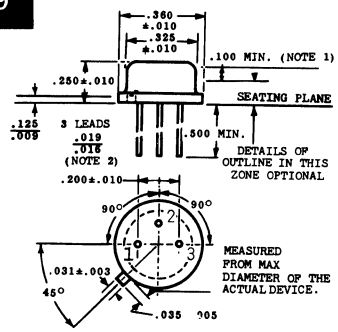

TO39 NOTES:

1. This zone is controlled for automatic handling. The variation in actual diameter within this zone shall not exceed .010".
2. (Three Leads) (Dim. .016 min. and .019 max.) applies between (.050 max.) and (.250 min.). (Dim. .016 min. and .021 max.) applies between (.250 min.) and .5" from seating plane. Diameter is uncontrolled in .050 max. and beyond .5" from seating plane.

TO41

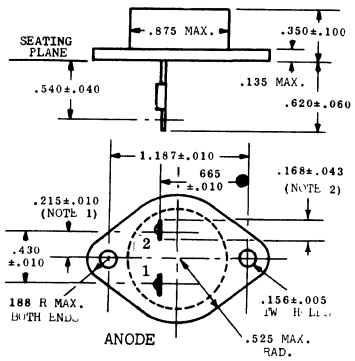

NOTES FOR TO41:

1. These dimensions should be measured at points .050 to .055 below seating plane. When gage is not used, measurement will be made at seating plane.
2. Square or radius on end of terminal and/or hole optional.

TO46

SEE TO5 FOR NOTES

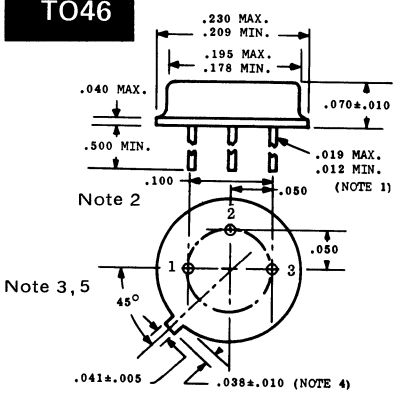

TO46 NOTES:

1. (Three Leads) (Dim. .012 min. and .019 max.) applies between (.050 max.) and (.250 min.). (Dim. .016 min. and .021 max.) applies between (.250 min.) and .5" from seating plane. Diameter is uncontrolled in (.050 max.) and beyond .5" from seating plane.
2. Maximum diameter leads at a gaging plane .054" and .001"-.000" below seating plane to be within .007" of their true position relative to maximum-width tab and to the maximum .230" diameter measured with a suitable gage. When gage is not used, measurement will be made at seating plane.
3. Index tab for visual orientation only.
4. Measured from maximum diameter of the actual device.
5. Tab centerline.

TO48

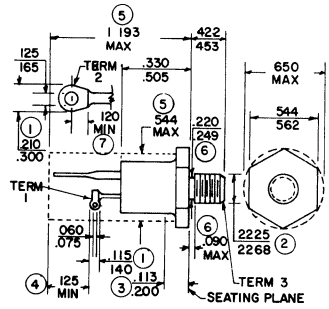

TO48 NOTES:

1. Contour & angular orientation of these terminals is optional.
2. Pitch diameter of 1/4-28UNF-2A (coated) threads (ASA B1.1-1960).
3. A chamfer or undercut on one or both ends of hexagon portion is optional.
4. Minimum difference in terminal lengths to establish datum line for numbering terminals.
5. The device with exception of the hexagon and thread lies within the cylinder defined by dia. .544 max. and length 1.193 max.
6. Length of incomplete or undercut thread.
7. Minimum flat.

TO49

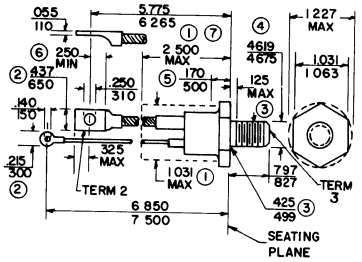

TO49 NOTES:

1. The device with the exception of the hexagon, thread, and flexible lead extensions lies within the cylinder defined by dia. 1.031 max. and length 2.5 max.
2. Angular orientation of these terminals with respect to hexagonal portion is undefined. Square or radius on end of terminals is optional.
3. Length of incomplete or undercut threads.
4. Pitch diameter of 1/2-20 UNF-2A (coated) threads (ASA B1.1-1960).
5. A chamfer (or undercut) on one or both ends of hexagonal portion is optional.
6. Minimum flat.
7. Seated height with lead bent at right angles.

TO52

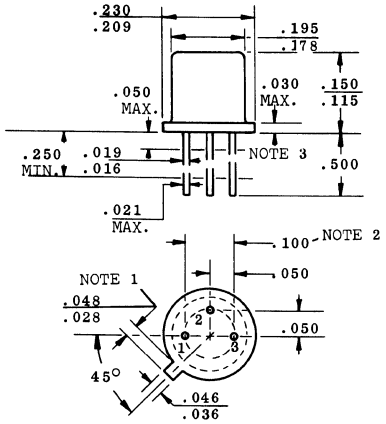

NOTES:

1. Measured from max. dia. of the actual device.
2. Leads having max. dia. .019 measured in gaging plane .054 - .001 below the seating plane of the device shall be within .007 of their true locations.
3. (All leads) Dia. is uncontrolled to .050 from seating plane and beyond min. tolerance of lead length (1.5 or .5) from seating plane. Dim. A applies between .050 and .250 from seating plane. Dim. B applies between .250 and min. tolerance of lead length from seating plane.

TO59

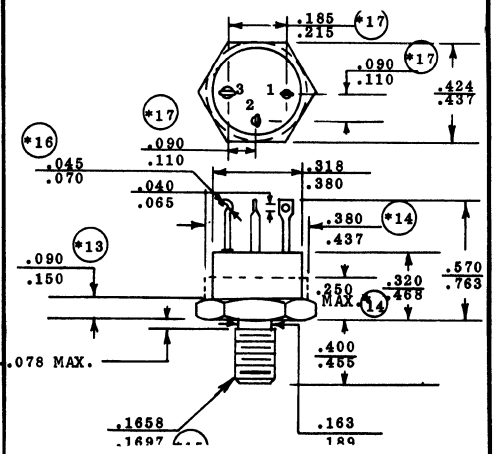

TO59 NOTES

13. Dimension does not include sealing glanges.
14. The outline contour with exception of hexagon is optional within zones or dimension specified.
15. Pitch diameter of 10-32 UNF-2A (coated) threads.) ASA B1.1-1960).
16. This terminal can be flatten and pierced or hook type.
17. Position of leads in relation to the hexagon is not controlled.

TO64

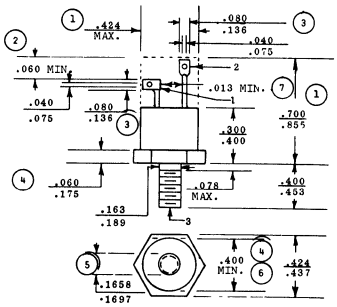

NOTES FOR TO64

1. The outline contour with exception of hexagon is optional within zone or dimension specified.
2. Minimum difference in terminal lengths to establish datum line for numbering terminals.
3. Contour and orientation of fixed terminal lugs are optional.
4. A chamfer (or undercut) on one or both ends of hexagonal portion is optional.
5. Pitch diameter - thread 10-32 UNF-2A (coated). Reference (screw thread standards for federal services - handbook H-28.
6. Minimum diameter of seating plane.
7. Minimum spacing between terminals.

TO65

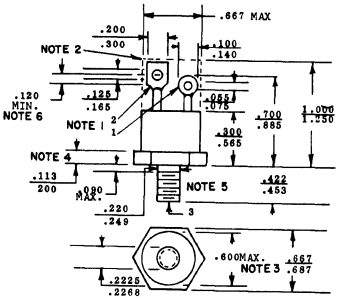

TO65

NOTES:

1. Contour and orientation of fixed terminal lugs are optional.
2. The outline contour (with exception of hexagon) is optional within zone defined by Diameter .667 and length 1.00/1.25
3. Minimum diameter of seating plane.
4. A chamfer (or undercut) on one or both ends of hexagonal portion is optional.
5. Pitch diameter - Thread 1/4-28 UNF-2A (coated). Reference (screw thread standards for federal services 1957) handbook 1957 H28.
6. Minimum flat.

TO66

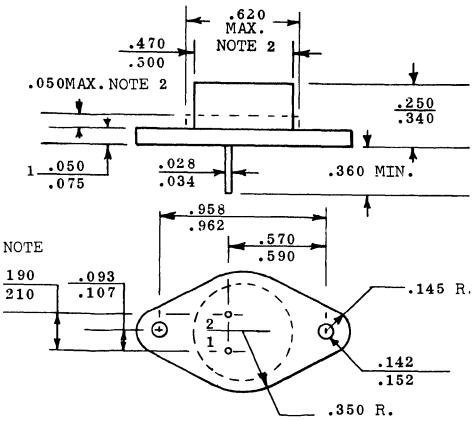

NOTES FOR TO66:

1. Dimension does not include sealing flanges.
2. The outline contour is optional within zone defined by these dimensions.

TO72

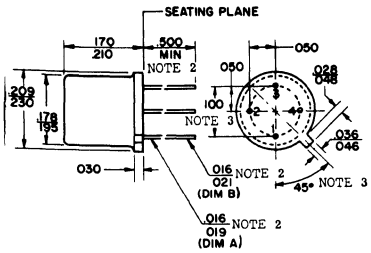

NOTES:

1. (Four leads). Maximum number of leads omitted in this outline, None (0). The number and position of leads actually presented are indicated in the product registration. Outline designation determined by the location and minimum angular or linear spacing of any two adjacent leads.

2. All leads Øb2 applies between l_1 and l_2. Øb applies between l_2 and .500 from seating plane. Diameter is uncontrolled in l_1 and beyond .500 from seating plane.

3. Leads have maximum diameter .019 measured in gaging plane .054 (1.34MM) - .001 (.025 MM) - .000 (.000 MM) below the seating plane of the product shall be within .007 (.178 MM) of their true position relative to a maximum width tab.

TO83

MAY ALSO BE AVAILABLE IN TO94.

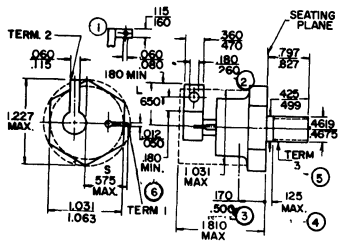

NOTES:

1. Contour and orientation of fixed terminal lugs are undefined.
2. The body and terminals of the device, with the exception of L, lies within the cylinder defined diameter 1.031 and length 1.81.
3. A chamfer (or undercut) on one or both ends of the hexagonal portions is optional.
4. Length of incomplete or undercut threads.
5. Pitch dia. of 1/2-20 UNF2-A (coated) threads (ASA B1.1-1960).
6. Minimum flat.

TO84

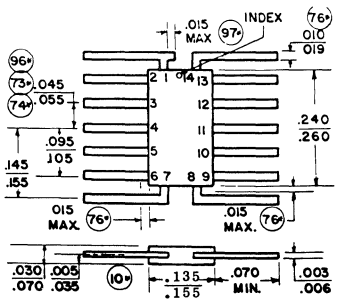

TO92

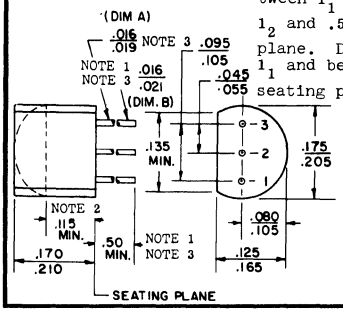

NOTES: TO92

1. Three leads.

2. Contour of the package beyond this zone is uncontrolled.

3. (Three leads). Øb2 applies between l_1 and l_2: Øb applies between l_2 and .500 (12.70 MM) from seating plane. Diameter is uncontrolled in l_1 and beyond .500 (12.70 MM) from seating plane.

TO93

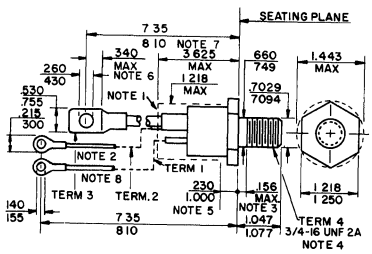

NOTES:

1. The device with exception of the hexagon, thread, and flexible lead extensions lies within the cylinder diameter 1.218 and length 3.625
2. Angular orientation of these terminals with respect to hex portion is undefined. Square or radius on end of terminals is optional.
3. Length of incomplete or undercut threads.
4. Pitch diameter of 3/4-16UNF-2A (coated) threads (ASA B1.1).
5. A chamfer (or undercut) on one or both ends of hex portion is optional.
6. Minimum flat.
7. Seated height with lead bent at right angles.
8. Flexible leads for terminals 1 and 2 are identified by color coding for specific applications.

TO94

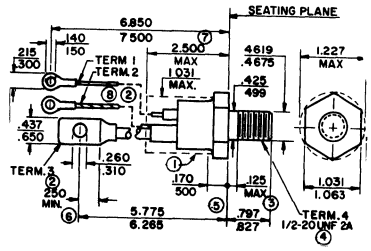

NOTES: TO94

1. The device with the exception of the hexagon, thread, and flexible lead extensions lies within the cylinder diameter 1.031 and length 2.50.
2. Angular orientation of these terminals with respect to hex portion is undefined. Square or radius on end of terminals is optional.
3. Length of incomplete or undercut threads.
4. Pitch diameter of 1/2-20 UNF-2A (coated) threads (ASA B1.1-1960)
6. A chamfer (or undercut) on one or both ends of hex portion is optional.
6. Minimum flat.
7. Seated height with lead bent at right angles.
8. Flexible leads for Term 1 & 2 are identified by color coding for specific applications.

TO98

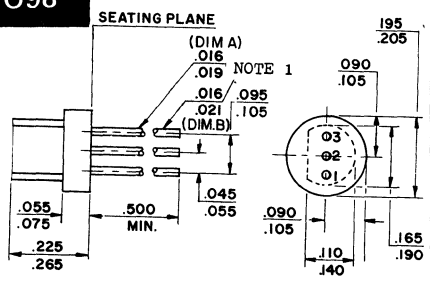

MAY ALSO BE AVAILABLE IN TO83.

NOTES FOR TO98:

1. (All leads) Diameter is uncontrolled to .050 from seating plane and beyond minimum tolerance of lead length (1.5 or .5) from seating plane. Dim A applies between .050 and .250 from seating plane. Dim B applies between .250 and min. tolerance of lead length from seating plane.

TO103

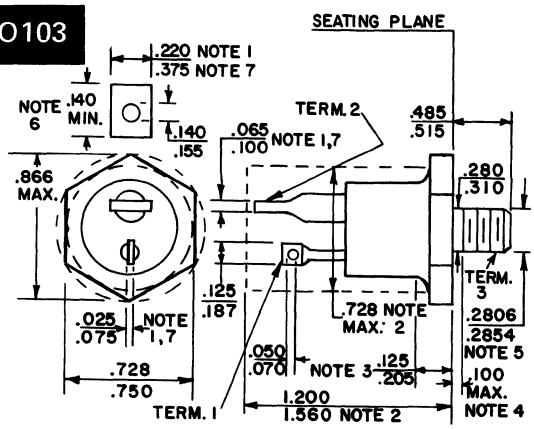

TO103

NOTES:

1. Contour and angular orientation of fixed terminal lugs are undefined.
2. The body and terminals of the device lie within the cylinder defined by .728 Dia. Max. and $\frac{1.20}{1.56}$
3. A chamfer (or undercut) on one or both ends of the hexagonal portion is optional.
4. Length of incomplete or undercut threads X stud dia.
5. Pitch diameter of 5/16-24 UNF-2A (Coated) threads.
6. Minimum flat.
7. Position of terminals 1 and 2 in relation to hexagon is not controlled.

TO108

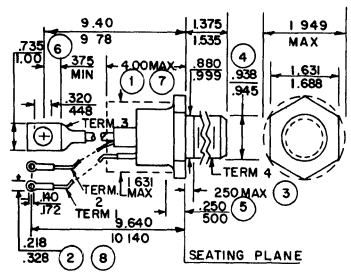

TO108 NOTES:

1. The body of the device with exception of the hexagon, thread, and flexible lead extensions lies within the diameter 1.631 max.
2. Angular orientation of these terminals with respect to hexagon portion is undefined. Square or radius on end of terminals is optional.
3. Length of incomplete or undercut threads.
4. Pitch diameter of 1-12 UNF-2A (Coated) threads (ASA B1.1-1960).
5. A chamfer (or undercut) on one or both ends of hexagon portion is optional.
6. Minimum flat.
7. Seated height with lead bent at right angles.
8. Flexible leads for Terminals 1 & 2 are identified by color coding for specific applications.

TO106

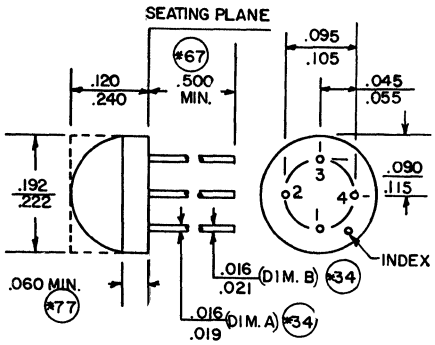

TO106 NOTES

34. (All leads) Diameter is uncontrolled to .050 from seating plane and beyond minimum tolerance of lead length (1.5 or .5) from seating plane. Dim A applies between .050 and .250 from seating plane. Dim B applies between .250 and minimum tolerance of lead length from seating plane.
67. (Four, six, ten, or twelve leads). Maximum number of leads omitted in this outline, one(1). The number and position of leads actually present are indicated in the product registration. Outline designation determined by the location and minimum angular spacing of any two adjacent leads.
77. Contour of the package beyond this zone is uncontrolled.

TO109

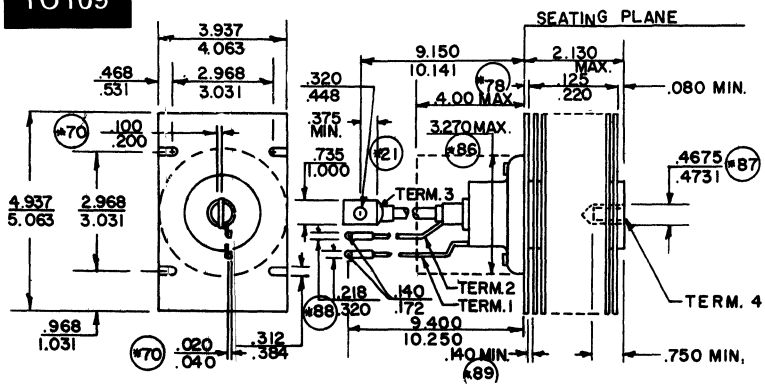

TO109 NOTES

21. Minimum flat.
70. Contour and orientation of terminal flats are undefined.
78. Seated height with lead bent at right angles.
86. The body of the device with the exception of heat sink and flexible leads lies within the cylinder defined by the dotted outline.
87. Pitch diameter of threads -1/2-20 UNF2B(ASA Bul. 1-1960).
88. Parallel, twisted or coaxial flexible leads for terminals 1 and 2 are identified by color for specific applications. Coxial shielded lead has shield as terminal 2.
89. When dimensions less than .180 (4.58mm) are used, clearance in the second fin will be provided.

TO118

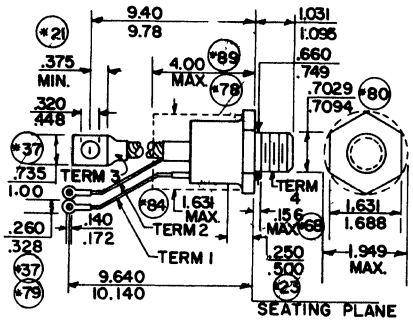

TO118 NOTES

21. Minimum flat.
23. A chamfer(or undercut) on one or both ends of hexagonal portion is optional.
37. Angular orientation of individual terminals is undefined.
68. Length of incomplete or undercut threads.
78. Seated height with lead bent at right angles.
79. Flexible leads for terminals 1and2 are identified by color coding for specific applications.
80. Pitch diameter of 3/4-16 UNF-2A (coated) threads (ASA B1.1).
89. When dimensions less than .180 (4.58mm) are used, clearance in the second fin will be provided.

TO122

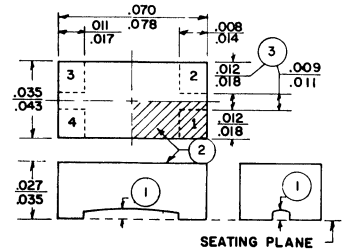

1. Details of the outline in this zone are optional except that the outline shall not extend beyond the seating plane.
2. An index mark shall be located on the top surface in the quadrant above terminal one.
3. These tolerances are non-cumulative.

Y200/TO200

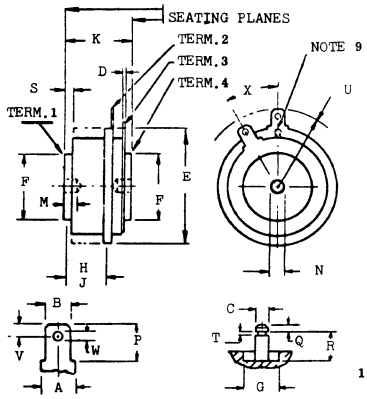

DETAIL OF TAB TERM. DETAIL OF RND TERM.

NOTES:

1. Refer to rules for dimensioning semiconductor product outlines included in Publication No. 76.
2. Package contour optional between Term. 1 and 2 and between Term. 2 and 3 within E. Term. 2 and 3 must be located to make the outline non-symmetrical.
3. Term. 2 and 3 are both tab type terminals.
4. Minimum electrical creepage length between Term. 1 and 2 and between Term. 1 and 3.
5. Minimum electrical strike distance between Term. 1 and 2 and between Term. 1 and 3.
6. Surfaces flat within .0015 per inch.
7. Typical two places.
8. Term. 2 is round type and Term. 3 is tab type.
9. Round term. used on some variations for Term. 2 only.
10. R is for connector clearance. Counterbore G is optional.

	A	B	C	D	E	F	G	H	J	K	M	N
Y200a/	.186	.186		.014	1.42	.730		.300	.300	.490	.050	.123
TO200AA	.312	.191		.019	1.70	1.16		MIN	MIN	.600	.125	.145
NOTES:				7	2	6		4	5		7	7
Y200b/	.186	.186	.057	.014	1.42	.730	.100	.300	.300	.490	.050	.123
TO200AB	.312	.191	.059	.019	1.70	1.16	MIN	MIN	MIN	.600	.125	.145
NOTES:			8		2	6	10	4	5		7	7
Y200c/	.186	.186	.057	.014	2.20	1.03	.100	1.00	.500	1.00	.050	.123
TO200AC	.312	.191	.059	.019	2.50	1.50	MIN	MIN	MIN	1.06	.160	.145
NOTES:			8		2	6	10	4	5		7	7

	P	Q	R	S	T	U	V	W	X
Y200a/	.245			.010		.610	.115	.050	20°
TO200AA	.760			.100		1.12	.140	.070	50°
NOTES:	3			7			3	7	
Y200b/	.245	.025	.100	.010	.010	.610	.115	.050	20°
TO200AB	.760	.065	MIN	.100	.020	1.12	.140	.070	50°
NOTES:			10	7	8		8		
Y200c/	.245	.025	.100	.030	.010	1.43	.115	.050	15°
TO200AC	.760	.065	MIN	.110	.020	MAX	.140	.070	50°
NOTES:			10	7	8		8		

Y201/TO201

	A	B	C	D	E	F	G	H	J	K	M	N	P	Q
Y201a/	.045	.165	.115	.090	.495	.245	.245	.045	.025	.145	.095	.165	.040	.027
TO201AA	.055	.175	.125	.110	.505	.255	.255	.060	.035	.175	.115	.195	.060	.033

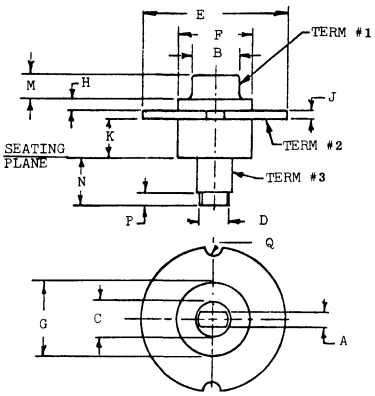

NOTES:

1. Refer to rules for dimensioning semiconductor product outlines included in Publication No. 76.

Y202/TO202

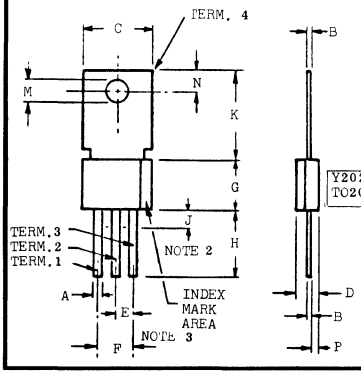

NOTES:

1. Refer to rules for dimensioning semiconductor product outlines included in Publication No. 76.
2. Lead dimensions uncontrolled in this zone to allow for body and lead irregularities.
3. Lead spacing to be measured between .125 and .150 from the point of emergence from the body.

	A	B	C	D	E	F	G	H	J	K	M	N	P
Y202a/	1.14	.260	9.15	3.05	2.41	4.83	7.12	9.43	2.54	12.2	3.12	2.42	1.00
TO202AA	1.39	.660	10.1	4.82	2.66	5.33	8.12	13.2	MAX	13.2	3.22	3.93	1.93

Y203/TO203

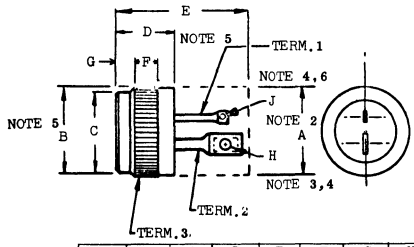

NOTES:

1. Refer to rules for dimensioning semiconductor product outlines included in Publication No. 76.
2. Outline contour is optional within zone defined by A and F min. and E max.
3. Elongated hole in terminal is optional.
4. Contour and orientation of Term. 1 and 2 are not defined.
5. Straight knurl surface.
6. Term. 1 to be shorter than Term. 2 for identification.

	A	B	C	D	E	F	G	H	J
Y203a/	.510	.501	.465	.330	.800	.100	.080	.065	.035
TO203AA	MAX	.505	.475	.380	MAX	MIN	.097	.090	.068

Y204/TO204

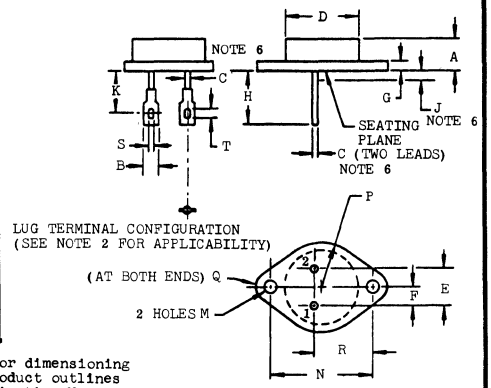

NOTES:

1. Refer to rules for dimensioning semiconductor product outlines included in Publication No. 76.
2. Lug terminal configuration required.
3. Lug terminal configuration not applicable--straight pins required.
4. Square or radius on end of terminal and hole configuration optional.
5. These dimensions should be measured at points .050 - .055 below seating plane. When gauge is not used, measurement will be made at the seating plane.
6. C applies between J and H. Diameter is uncontrolled in J.
7. The seating plane of the header shall be flat .001 concave to .004 convex inside a .930 diameter circle on the center of the header and flat within .001 concave to .006 convex overall.

	REF.	A	B	C	D	E	F	G	H	J	K	M	N	P	Q	R	S	T
Y204a/	TO3	.250		.038	.875	.420	.205	.060	.312	.050		.151	1.17	.495	.131	.655		
TO204MA		.450		.043	MAX	.440	.225	.135	.500	MAX		.161	1.19	.525	.188	.675		
Y204b/	TO41	.250	.125	.038	.875	.420	.205	.060	.560	.050	.500	.151	1.17	.495	.131	.655	.072	.072
TO204MB		.450	.210	.053	MAX	.440	.225	.135	.680	MAX	.581	.161	1.19	.525	.188	.675	.120	.170
Y204c/	MA	.250		.048	.875	.420	.205	.060	.312	.050		.151	1.17	.495	.131	.655		
TO204MC		.450		.053	MAX	.440	.225	.135	.500	MAX		.161	1.19	.525	.188	.675		

Y205/TO205

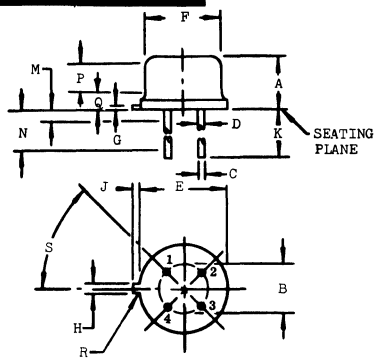

NOTES:

1. Refer to rules for dimensioning semiconductor product outlines included in Publication No. 76.
2. Lead number 4 omitted on this outline.
3. Tab omitted in this variation.
4. Beyond R max, H must be held for a minimum length of .011.
5. J measured from max E.
6. Detailes of outline in this zone optional.
7. F shall not vary more than .010 in zone P. This zone is controlled for automatic handling.
8. Leads at gauge plane .054-.055 below seating plane shall be within .007 radius of True Position (TP) at maximum material condition (MMC) relative to tab at MMC. The device may be measured by direct methods or by the gauge and gauging procedure described on gauge drawing GS-1.
9. D applies between M and N. C applies between N and K min. Diameter is uncontrolled in M and beyond K min.

	REF.	A	B	C	D	E	F	G	H	J	K	M	N	P	Q	R	S
Y205a/	TO5	.240	.200	.016	.016	.335	.305	.009	.028	.029	1.50	.050	.250	.100	.050	.010	45°
TO205MA		.260	TP	.021	.019	.370	.335	.041	.034	.045	1.75	MAX	MIN	MIN	MAX	MAX	TP
NOTES:			8	9	9				4	4,5	9	9	9	7	6		8
Y205b/	TO9	.200	.200	.016	.016	.290	.275				1.50	.050	.250	.100	.075		
TO205MB		.260	TP	.021	.019	.370	.335				1.75	MAX	MIN	MIN	MAX		
NOTES:			8	9	9			3	3		9	9	9	7	6		3
Y205c/	TO33	.240	.200	.016	.016	.335	.305	.009	.028	.029	1.50	.050	.250	.100	.050	.010	45°
TO205MC		.260	TP	.021	.019	.370	.335	.041	.034	.045	1.75	MAX	MIN	MIN	MAX	MAX	TP
NOTES:			8	9	9				4	4,5	9	9	9	7	6		8
Y205d/	TO39	.240	.200	.016	.016	.335	.305	.009	.028	.029	.500	.050	.250	.100	.050	.010	45°
TO205MD		.260	TP	.021	.019	.370	.335	.041	.034	.045	.750	MAX	MIN	MIN	MAX	MAX	TP
NOTES:			8	9	9				4	4,5	9	9	9	7	6		8

Y206/TO206

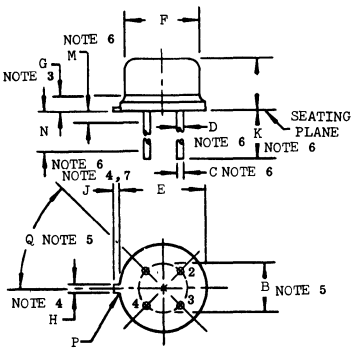

NOTES:

1. Refer to rules for dimensioning semiconductor product outlines included in Publication No. 76.
2. Lead number 4 omitted in this variation.
3. Body contour optional within zone defined by E-F and G.
4. Beyond P max, H must be held for a minimum length of .011.
5. Leads at gauge plane shall be within .007 radius of True Position (TP) at maximum material condition (MMC) relative to tab at MMC. The device may be measured by direct methods or by the gauge and gauging procedure described on gauge drawing GS-2.
6. D applies between M and N. C applies between N and K min. Diameter is uncontrolled in M and beyond K min.
7. J measured from maximum E of actual device.

	REF.	A	B	C	D	E	F	G	H	J	K	M	N	P	Q
Y206a/	TO18	.170	.100	.016	.016	.209	.178	.040	.036	.028	.500	.050	.250	.010	45°
TO206MA		.210	TP	.021	.019	.230	.195	MAX	.046	.048	.750	MAX	MIN	MAX	TP
Y206b/	TO46	.065	.100	.016	.016	.209	.178	.030	.036	.028	.500	.050	.250	.010	45°
TO206MB		.085	TP	.021	.019	.230	.195	MAX	.046	.048	.750	MAX	MIN	MAX	TP
Y206c/	TO52	.115	.100	.016	.016	.209	.178	.040	.036	.028	.500	.050	.250	.010	45°
TO206MC		.150	TP	.021	.019	.230	.195	MAX	.046	.048	.750	MAX	MIN	MAX	TP
Y206d/	TO72	.170	.100	.016	.016	.209	.178	.040	.036	.028	.500	.750	.250	.010	45°
TO206MD		.210	TP	.021	.019	.230	.195	MAX	.046	.048	.750	MAX	MIN	MAX	TP

Y207/TO207

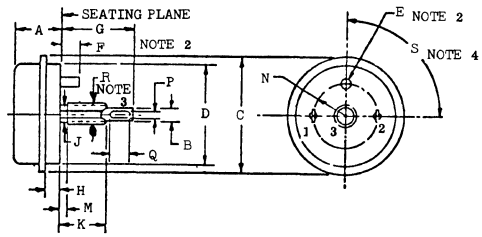

NOTES:

1. Refer to rules for dimensioning semiconductor product outlines included in Publication No. 76.
2. Mechanical index (insulated).
3. R is pitch diameter of coated threads. Ref: Screw Thread Standards for Federal Services, Handbook H28, Part I.
4. Measured at seating plane.

	REF.	A	B	C	D	E	F	G	I	J	K	M	N	P	Q	R	S
Y207a/	TO36	.275	.120	1.25	.990	.090	.100	.610	.050	.166	.375	.078	.335	.070	.120	10-32UNF-2A	85°
TO207MA		.520	.190	MAX	1.01	.140	.312	.710	.218	.189	.500	MAX	.355	.120	.145		95°

Y208/TO208

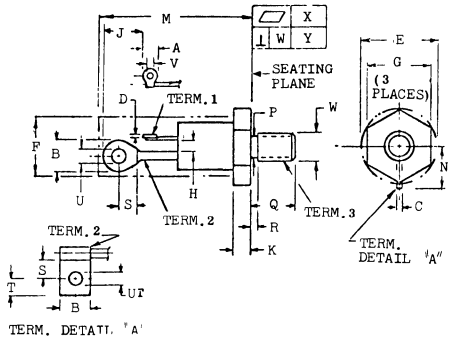

NOTES:

1. Refer to rules for dimensioning semiconductor product outlines included in Publication No. 76.
2. Device contour except on hex and noted terminal dimension is optional within zone defined by F and M, F not to exceed actual G.
3. Chamfer or undercut on one or both ends of the hexagonal portion is optional.
4. Contour and angular orientation of terminals 1 and 2 with respect to hexagonal portion are optional.
5. Min. flat.
6. Minimum spacing between terminals 1 and 2 at all points.
7. Minimum difference in terminal lengths to establish datum line for numbering terminals.
8. W is pitch diameter of coated threads Ref: Screw Thread Standards for Federal Services, Handbook H28, Part I.
9. Term. Detail A applies to this variation.

	REF.	A	B	C	D	E	F	G	H	J	K	M	N
Y208a/	TO48	.115	.210			.650	.544	.544		.125	.075	1.19	
TO208MA		.140	.300			MAX	MAX	.563		MIN	.200	MAX	
NOTES:		4	4				2			7	3	2	
Y208b/	TO64	.080	.080			.505	.423	.423	.013	.060	.060	.700	
TO208MB		.136	.136			MAX	MAX	.438	MIN	MIN	.175	.855	
NOTES:		4	4				2		6	7	3	2	
Y208c/	TO83	.115	.360	.059	.030	1.22	1.03	1.03			.170	1.81	.650
TO208MC		.160	.480	.115	.050	MAX	MAX	1.06			.500	MAX	MAX
NOTES:		4	4,9	4	4		2				3	2	

	P	Q	R	S	T	U	V	V	X	Y
Y208a/	.220	.422	.090	.120		.125	.060	1/4-28UNF-2A	.002	.006
TO208MA	.249	.453	MAX	MIN		.165	.075		MAX	MAX
NOTES:				4,5				8		
Y208b/	.163	.400	.078			.040	.040	10-32UNF-2A	.002	.006
TO208MB	.189	.453	MAX			.075	.075		MAX	MAX
NOTES:								8		
Y208c/	.425	.797	.125	.180	.180	.180	.060	1/2-20UNF-2A	.002	.006
TO208MC	.499	.827	MAX	MIN	MIN	.260	.080		MAX	MAX
NOTES:				4,5,9	4,9			8		

Y209/TO209

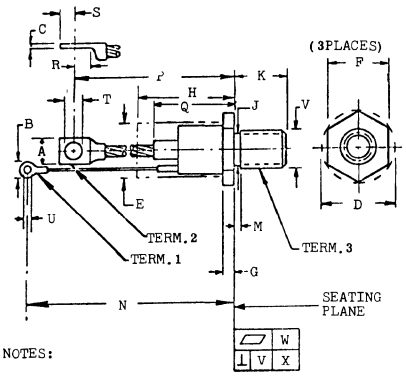

NOTES:

1. Refer to rules for dimensioning semiconductor product outlines included in Publication No. 76.
2. The body of the device with the exception of the hexagon and flexible lead extensions lies within the cylinder defined by E and H, E not exceed actual F.
3. Seated height with the leads bent at right angles.
4. Chamfer or undercut on one or both ends of the hexagonal portion is optional.
5. Flexible lead.
6. Contour and orientation of terminal lug are optional. Square or radius on end of terminal is optional.
7. Min. flat.
8. V is pitch diameter of coated threads. Ref: Screw Thread Standards for Federal Services, Handbook H28, Part I.

	REF.	A	B	C	D	E	F	G	H	J	K	M	N
Y209a/	TO49	.437	.215	.055	1.22	1.03	1.03	.170	2.50	.425	.797	.125	6.85
TO209MA		.650	.300	.110	MAX	MAX	1.06	.500	MAX	.499	.827	MAX	7.50
NOTES:		6	6			2		4	2,3				5

	P	Q	R	S	T	U	V	W	X
Y209a/	5.77	1.75	.250	.250	.250	.140	1/2-20UNF-2A	.003	.006
TO209MA	6.26	MAX	MIN	MIN	.310	.150		MAX	MAX
NOTES:	5		7	7			8		

Y210/TO210

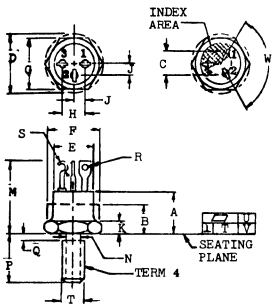

1. Refer to rules for dimensioning semiconductor product outlines included in Publication No. 76.
2. Three terminals are to be equally spaced in one of the two alternate end configurations shown.
3. Chamfer or undercut on one or both ends of hexagonal portion is optional.
4. The device contour with the exception of the hexagon is optional within cylinder defined by F and B, F not to exceed actual G.
5. Terminal 3 can be flattened and pierced or hook type. A visual index is required when the flattened and pierced tab terminal contour (identical to the adjacent terminals) is used with the end configuration having angular spacing of W.
6. Angular orientation of terminals with respect to hexagon is optional.
7. T is pitch diameter of coated threads. Ref: Screw Thread Standards for Federal Services, Handbook H28, Part I.

	REF.	A	B	C	D	E	F	G	H	J	K	M	N
Y210a/	TO59	.320	.250	.185	.505	.318	.380	.423	.185	.090	.090	.570	.155
TO210MA		.468	MAX	.215	MAX	.380	.437	.438	.215	.110	.150	.763	.189
NOTES:			4				4		6	6	3		

	P	Q	R	S	T	U	V	W
Y210a/	.400	.078	.040	.040	10-32UNF-2A	.002	.006	105°
TO210MA	.455	MAX	.065	.070		MAX	MAX	135°
NOTES:				5	7			6

Y211/TO211

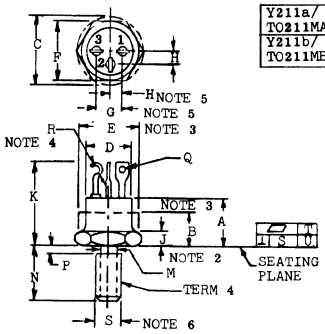

	REF.	A	B	C	D	E	F	G	H	J	K	M	N
Y211a/	TO61	.325	.270	.794	.570	.610	.669	.340	.170	.090	.640	.220	.422
TO211MA		.460	MAX	MAX	.610	.687	.688	.415	.213	.150	.875	.249	.455
Y211b/	TO63	.480	.300	1.01	.745	.775	.847	.485	.240	.090	.937	.278	.460
TO211MB		.535	MAX	MAX	.775	.875	.875	.515	.260	.167	1.03	.312	.495

	P	Q	R	S	T	U
Y211a/	.090	.047	.046	1/4-28UNF-2A	.002	.006
TO211MA	MAX	.072	.077		MAX	MAX
Y211b/	.105	.060	.060	5/16-24UNF-2A	.002	.006
TO211MB	MAX	.105	.105		MAX	MAX

NOTES:

1. Refer to rules for dimensioning semiconductor product outlines included in Publication No. 76.
2. Chamfer or undercut on one or both ends of hexagonal portion is optional.
3. The device contour with the exception of the hexagon is optional within cylinder defined by E and B, E not to exceed actual F.
4. Terminal 3 can be flattened and pierced or hook type.
5. Angular orientation of terminals with respect to hexagon is optional.
6. S is pitch diameter of coated threads. Ref: Screw Thread Standards for Federal Services, Handbook H28, Part I.

Y212/TO212

	REF.	A	B	C	D	E	F	G	H	J	K	M	N	P	Q	R	S	T
Y212a/	TO60	.215	.165	.035	.505	.320	.360	.423	.200	.100	.115	.385	.163	.422	.078	10-32UNF-2A	.002	.006
TO212MA		.320	MAX	.045	MAX	.360	.437	.438	TP	TP	.135	.455	.189	.455	MAX		MAX	MAX

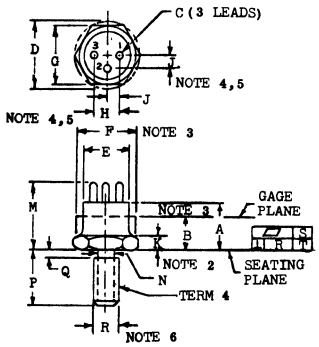

NOTES:

1. Refer to rules for dimensioning semiconductor product outlines in Publication No. 76.
2. Chamfer or undercut on one or both ends of hexagonal portion is optional.
3. The device contour with the exception of the hexagon is optional within cylinder defined by F and B, F not to exceed actual G.
4. Angular orientation of terminals with respect to hexagon is optional.
5. Pins within .008 DIA of True Position (TP) at Maximum Material Condition (MMC) relative to E at MMC and F at MMC.
6. R is pitch diameter of coated threads. Ref: Screw Thread Standards for Federal Services, Handbook H28 Part I.

Y213/TO213

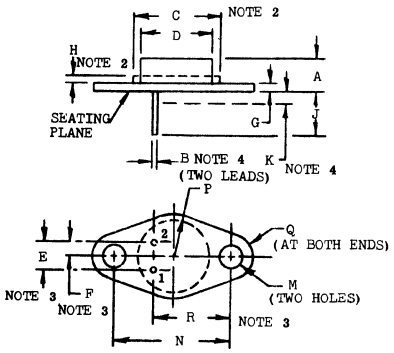

NOTES:

1. Refer to rules for dimensioning semiconductor product outlines included in Publication No. 76.
2. Body contour is optional within zone defined by G and H.
3. These dimensions should be measured at points .050-.055 below seating plane. When gauge is not used, measurement will be made at the seating plane.
4. B applies between K and J. Diameter is uncontrolled in K.
5. The seating plane of header shall be flat within .001 concave to .004 convex inside a .520 diameter circle on the center of the header and flat within .001 concave to .006 convex overall.

	REF.	A	B	C	D	E	F	G	H	J	K	M	N	P	Q	R
Y213a/	TO66	.250	.028	.620	.470	.190	.093	.050	.050	.360	.050	.142	.958	.350	.115	.570
TO213MA		.340	.034	MAX	.500	.210	.107	.075	MAX	.500	MAX	.152	.962	MAX	.145	.590

Y214/TO214

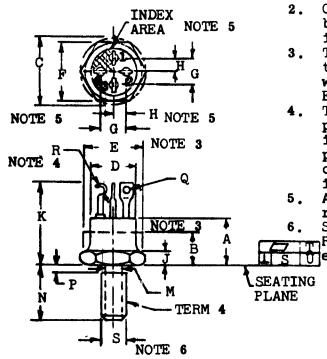

NOTES:

1. Refer to rules for dimensioning semiconductor product outlines included in Publication No. 76.
2. Chamfer or undercut on one or both ends of hexagonal portion is optional.
3. The device contour with the exception of the hexagon is optional within cylinder defined by E and B, E not to exceed actual F.
4. Terminal 4 can be flattened and pierced or hook type. A visual index is required when the flattened and pierced tab terminal contour (identical to the adjacent terminals) option is used.
5. Angular orientation of terminals with respect to hexagon is optional.
6. S is pitch diameter of coated threads. Ref: Screw Thread Standards for Federal Services, Handbook H28, Part I.

	REF.	A	B	C	D	E	F	G	H	J	K	M	N
Y214a/	TO111	.320	.250	.505	.318	.380	.423	.185	.090	.090	.570	.155	.400
TO214MA		.468	MAX	MAX	.380	.437	.438	.215	.110	.150	.763	.189	.455

	P	Q	R	S	T	U
Y214a/	.078	.040	.040	10-32UNF-2A	.002	.006
TO214MA	MAX	.065	.070		MAX	MAX

Y219/TO219

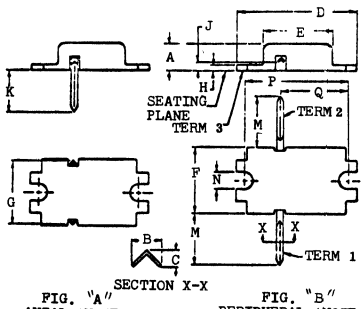

FIG. "A" AXIAL (NOTE 2)

FIG. "B" PERIPHERAL (NOTE 3)

NOTES:

1. Refer to rules for dimensioning semiconductor product outlines included in Publication No. 76.
2. Figure "A", Axial Terminal Configuration, applicable.
3. Figure "B", Peripheral Terminal Configuration, applicable.
4. Terminal end configurations are optional.
5. G is measured at seating plane.

	A	B	C	D	E	F	G	H	J	K	M	N	P	Q
Y219a/	.160	.045	.025	.890	.480	.480	.460	.055		.370		.128	.740	.500
TO219AA	.200	.060	.045	.910	.515	.520	.505	.070		.450		.150	.760	.520
Y219b/	.160	.045	.025	.890	.480	.480		.055	.100		.415	.128	.740	.500
TO219AB	.200	.060	.045	.910	.515	.520		.070	.120		.560	.150	.760	.520

Y220/TO220

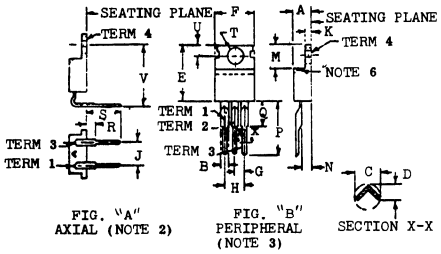

FIG. "A" AXIAL (NOTE 2)

FIG. "B" PERIPHERAL (NOTE 3)

NOTES:

1. Refer to rules for dimensioning semiconductor product outlines included in Publication No. 76.
2. Figure "A", Axial Terminal Configuration, applicable.
3. Figure "B", Peripheral Terminal Configuration, applicable.
4. Alternate lead configurations allowed within Øb and c.
5. Tab contour optional within H_1 and E.
6. Chamfer optional.
7. Position of lead to be measured .050 - .055 below seating plane.
8. Position of lead to be measured .250 - .255 from botton of dimension "D".

	A	B	C	D	E	F	G	H	J	K	M	N	P	Q	R	S	T	U	V
Y220a/	.140	.045	.020	.012	.560	.380			.190	.020	.230	.080			.050	.360	.139	.100	.580
TO220AA	.190	.070	.045	.045	.625	.420			.210	.055	.270	.115			MAX	.422	.147	.120	.610
Y220b/	.140	.045	.020	.012	.560	.380	.090	.190		.020	.230	.080	.500	.250			.139	.100	
TO220AB	.140	.070	.045	.045	.625	.420	.110	.210		.055	.270	.115	.562	MAX			.147	.120	

Z NOTES

(DRAWING REFERENCE INFORMATION)

DASH NO.

– 1 This item is made in accordance with the customer's specification.
– 3 Consult the manufacturer for the outline drawing.
–10 These items are available either as pairs with outline drawings M182 and M206 or as quads with outline drawings M183 and M184.
–11 These items are available as matched pairs and quads. They are physically available in the following styles: tubular, disc, rectangular and square. Consult manufacturer for details.
–12 Offered in hermetically sealed, standard JEDEC package (TO5), or in a standard custom configuration.
–16 Available in either TO5, TO18, F3a or F49.
–19 Device without suffix same as DO4 with cathode connected to stud. Device with suffix - R - same as DO 4 except anode connected to stud.
–20 Device without suffix same as DO8 with cathode connected to stud.
–21 1N82A and 1N82AG are electrically identical. The package configuration for 1N82A is A90, and for 1N82AG is DO7.
–23 This item is shown without adapter at F56 and with adapter at S216.
–24 Device same as TO3 with anode connected to case.
–25 Device same as TO8 with anode connected to case.
–26 Device same as TO66 with anode connected to case.
–27 Device same as S120. Type number suffix - N - indicates anode connected to stud. Suffix - P - indicates cathode connected to stud.
–28 Device is same as S120a. Type number suffix - N - indicates anode connected to stud. Suffix - P - indicates cathode connected to stud.
–29 Device is same as S128. Type number suffix - N - indicates anode connected to stud. Suffix - P - indicates cathode connected to stud.
–34 Available in either DO4 or DO10.
–42 Type number with suffix N28 applies to drawing F10x; type number with suffix N26 applies to F49b; type number with suffix N18 applies to M86b; type number with suffix N20 applies to F27f; type number with suffix N10 applies to F54; type number with suffix N25 applies to F58; type number with suffix N27 applies to S252; type number with suffix N16 applies to F10p
–43 The outline drawing for type number without suffix is A1gj; outline drawing for type number with suffix C is A99b.
–44 Type number with suffix A applies to outline drawing A179; type number with suffix B applies to outline drawing M176a.
–45 Device package available in either A97 or F56a.
–46 Type number with –1 indicates 1 wire lead as in M281; type number with –2 indicates 2 wire lead as in M282.
–48 Available in the following package styles: suffix A added to type number denotes S4g; suffix B added to type number denotes M380; suffix C added to type number denotes F58; suffix D added to type number denotes S107b; suffix E added to type number denotes F27f; suffix F added to type number denotes S107c; suffix G added to type number denotes F10v.
–49 Types with suffix A apply to outline drawing A109a; types with suffix B apply to outline drawing A1a.
–53 Type number with 00 suffix applies to outline drawing F27m; type number with 01 suffix applies to outline drawing F49e; type number with 02 suffix applies to outline drawing F63a.
–55 Device available in packages A38j or A83cd. Consult manufacturer.
–57 TO5 outline with lead 3 omitted. Anode 1 connected to lead 1; gate connected to lead 2; anode 2 connected to the case.
–59 Device available in packages TO83 and TO94. Consult manufacturer.
–60 Available in either F27v or F10q
–62 Available in packages M472, M473 and S297.

SECTION 16

DIODE & SCR

Manufacturers' Local Offices

Since this D.A.T.A. BOOK provides only basic technical data for initial selection purposes, this section of Manufacturers' Local Offices will facilitate your requesting complete data sheets and application information from a nearby office.

AEIL – AEI – SEMICONDUCTORS LIMITED

			Zip Code	Telephone No.	Telex
Carholme Road, Lincoln, England					
NEW YORK	New York	Calvert Electronics International, Inc. 220 East 23rd Street	10016	212-679-1340	223 415
CALIFORNIA	Santa Clara	Calvert Electronics International, Inc. 2962 Scott Blvd.	95050	408-247-4700	

TFKG – ALLGEMEINE ELEKTRICITAETS GESELLSCHAFT, AEG – TELEFUNKEN

			Zip Code	Telephone No.	Telex
Postfach 940, D 7100 Heilbronn, Germany				07131-8821	728746
U. S. A.	New Jersey	AEG-Telefunken Corporation 570 Sylvan Avenue Englewood Cliffs	07632	201-568-8570	135497

ASEA – ALLMANA SVENSKA ELEKTRISKA AKTIEBOLAGET

	Telephone No.	Telex
ASEA, S-271, 83 Vasteras, Sweden	021-110000	4720
(Agents in all principal countries in the world)		(asea, vstraas)

Manufacturers' Local Offices

AEL – AMERICAN ELECTRONIC LABORATORIES, INC.

	Zip Code	Telephone No.	TWX
Post Office Box 552, Lansdale, Pennsylvania	19446	215-822-2929	510-661-4976

APD – AMERICAN POWER DEVICES, INC.

	Zip Code	Telephone No.
7 Andover Street, Andover, Massachusetts	01810	617-475-4074 617-475-4075 617-729-3027

APX – AMPEREX ELECTRONIC CORPORATION

			Zip Code	Telephone No.	TWX
99 Bald Hill Road, Cranston, Rhode Island			02920	401-737-3000	710-387-1591
ILLINOIS	Northlake	Amperex Electronic Corporation 360 E. North Avenue	60164	312-261-7877 312-261-7878-9	910-226-1968
NEW YORK	Hicksville	Amperex Electronic Corporation 230 Duffy Avenue	11802	516-931-6200	516-433-9045

ATEI – ATES COMPONENTI ELETTRONICI S.p.A.

			Telephone No.	Telex
2 Via Tempesta – 20149, Milan, Italy			4695651	31481
ENGLAND	London W.5	Ates Electronics Limited Mercury House Park Royal	01-998.6171	262401

BBCG – BROWN, BOVERI & CIE AG

			Zip Code	Telephone No.	Telex/TWX
Post Office Box 200, 6840 Lampertheim, West Germany				4074	0465727
NEW YORK	New York	BBCG Henley & Co., Inc. 202 E. 44th Street	10017	212-986-5544	222210

BNT – BURNS & TOWNE, INC.

	Zip Code	Telephone No.
18-36 Granite Street, Haverhill, Massachusetts	01830	617-373-1501

NATIONAL SALES OFFICE

NEW YORK	Hicksville	Burns & Towne, Inc. 550 Old Country Road	11801	516-935-0522
ALABAMA	Huntsville	Space Engineering Sales 4306 Governors Drive S. W. Suite R	35805	205-837-6060
ARIZONA	Scottsdale	Vinson Associates, Inc. 44 E. Indian School Road	85251	602-947-7371
CALIFORNIA	Hollywood	Westaironics, Inc. 1800 N. Highland Blvd.	90028	213-466-6201
	Redwood City	Carson Electronics Products 2334 Vera Avenue Post Office Box 1216	94061	415-365-4620
COLORADO	Englewood	Vinson Associates, Inc. 3600 South Lincoln	80110	303-789-2203
CONNECTICUT	Great Neck (New York)	Cooper-Simon & Co., Inc. 38 Middle Neck Road	11021	516-487-1142
FLORIDA	Orlando	Space Engineering Sales, Inc. 999 Woodcock Road Suite 216	32803	305-841-2271
IDAHO	Bellevue (Washington)	The Al Smith Company 405 166th Street, S.E.	98004	206-746-6770
ILLINOIS	Chicago	J. Rinaldi, Inc. 6319 North Central Avenue	60646	312-763-4848
INDIANA	Chicago (Illinois)	J. Rinaldi, Inc. 6319 North Central Avenue	60646	312-763-4848
MARYLAND	Rockville	Quality Components, Inc. Post Office Box 711	20851	301-933-1623
MASSACHUSETTS	Needham	Comp-Rep Associates, Inc. 1116 Great Plain Avenue	02192	617-444-2484
MICHIGAN	Detroit	Hufferd Company 16257 Meyers Rd.	48235	313-863-2665

Continued on next page

BNT — BURNS & TOWNE, INC. (Cont'd)

			Zip Code	Telephone No.
18-36 Granite Street, Haverhill, Massachusetts			01830	617-373-1501
MISSOURI	St. Louis	Coombs Associates 11734 Lackland Industrial Drive	63141	314-542-3399
NEW MEXICO	Albuquerque	Vinson Associates, Inc. Post Office Box 3295-Station D	87110	505-298-7442
NEW YORK	Great Neck	Cooper-Simon & Co., Inc. 38 Middle Neck Road	11021	516-487-1142
	Peekskill	Milton Ross Associates, Inc. Post Office Box 71	10566	914-737-7707
NORTH CAROLINA	Greensboro	Space Engineering Sales, Inc. P.O. Box 8298	27410	919-299-0987
OHIO	Twinsburg	Bridgefield Supply Co. 2107 Enterprise Pkway.	44087	216-425-4209
OREGON	Bellevue (Washington)	The Al Smith Company 405 166th Street, S.E.	98004	206-746-6770
PENNSYLVANIA	Philadelphia	KVA Sales Company 7208 Rising Sun Avenue	19111	215-728-5802
TEXAS	Dallas	Stevens Sales Co. P.O. Box 34493	75234	214-350-2476
VIRGINIA	Rockville (Maryland)	Quality Components Post Office Box 711	20851	301-933-1623
WASHINGTON	Bellevue	The Al Smith Company 405 166th Street, S. E.	98004	206-746-6770

INTERNATIONAL

					Telex
CANADA	Ontario	Cartwright Agencies 153 Main St. West Hamilton 10		416-528-0294	
DENMARK SWEDEN	Copenhagen 2100	E. V. Johanssen A/S Scherfigsvej 1		(01)29-56-22	2771
ENGLAND	London W3	Auriema Ltd. 23-31 King St.		01 993 1461	
GERMANY AUSTRIA	Munich 8000	Auriema Ltd. Theresienhohe 13/820		0811-53-0448	

Manufacturers' Local Offices

CRL – CENTRALAB SEMICONDUCTOR

	Zip Code	Telephone No.	TWX
Globe Union Inc., 4501 North Arden Drive, El Monte, California	91734	213-686-0567	910-587-3429

CITF – COGIE SEMICONDUCTEURS

			Telephone No.	Telex
3 et 5, Bd Anatole France, 93 Aubervilliers, France			833-29-91	69 902 SIME BLAML
GERMANY	8050 Freising	Texas Instruments, Kepserstrasse 33	081.61.37.63	29.624
ITALY	20 125 Milano	Texas Instruments, Via Lunigiana 46	688.31.41	31 269
SPAIN	Bilbao 1-Vizcaya	Cybermeca Espanola, Ibanez de Bilbao, 8	23-65-30	

USS – COMPONENTS, INC.

	Zip Code	Telephone No.	TWX
Smith Street, Biddeford, Maine	04005	207-282-5111	710-229-1559

CNS – CONTINENTAL SEMI–CONDUCTOR, INC.

	Zip Code	Telephone No.	Telex
59 Central Avenue, Farmingdale, New York	11735	516-694-3404	510-224-6444

DEL – DELCO ELECTRONICS

DIVISION OF GENERAL MOTORS CORP.

	Zip Code	Telephone No.	TWX
700 East Firmin Street, Kokomo, Indiana	46901	317-457-8461 317-459-2175	DLRA 317-452-5747

EDL – EDAL INDUSTRIES, INC.

			Zip Code	Telephone No.
4 Short Beach Road, East Haven, Connecticut			06512	203-467-2591
ALABAMA GEORGIA MISSISSIPPI TENNESSEE(West)	Huntsville	Component Sales Corporation Post Office Box 1156	35807	205-539-6973
CALIFORNIA (Northern) NEVADA OREGON WASHINGTON	San Lorenzo	William Parks Associates	94580	415-357-4240
CONNECTICUT	Madison	A & M Electronic Representatives, Inc. Ailene Drive	06443	203-245-1030
	Meriden	A & M Electronic Representatives, Inc. 595 Bee Street	06450	203-235-3943
FLORIDA	Ft. Lauderdale	Components Sales Corporation 1270 S.W. 14th Avenue	33312	305-563-1860
	St. Petersburg	Components Sales Corporation Box 9545	33740	813-360-7460
ILLINOIS INDIANA WISCONSIN	Chicago	Brock & Cushman 6156 West Grand Avenue	60639	312-622-4110
KANSAS	Wichita	Maury E. Bettis Company 426 North Fountain Street	67208	316-685-7441

Continued on next page

EDL – EDAL INDUSTRIES, INC. (Cont'd)

			Zip Code	Telephone No.
4 Short Beach Road, East Haven, Connecticut			06512	203-467-2591
MASSACHUSETTS MAINE NEW HAMPSHIRE RHODE ISLAND VERMONT	Needham	A & M Electronic Representatives, Inc. 1492 Highland Avenue	02192	617-444-8170
MICHIGAN	Framingham	W. R. Hummon Associates Post Office Box 501	48024	313-474-0661
MISSOURI IOWA NEBRASKA	Shawnee Mission (Kansas)	Maury E. Bettis Company Post Office Box 598	66201	913-362-0772
	St. Louis	Maury E. Bettis Company 9103 Bessemer Street	03134	314-429-2099
MINNESOTA NORTH DAKOTA SOUTH DAKOTA	Minneapolis	Furber Sales Company 6500 Nicollet Avenue, South	55423	612-861-1518
NEW JERSEY (Northern)	Nutley	S. Glassman Associates 326 Hillside Avenue	07110	201-667-0653
(Southern)	Radnor (Pa.)	W. H. Cordray Sales Company 1 Radnor Station	19087	215-687-1366
NEW YORK (Metropolitan)	Glen Cove	S. Glassman Associates 28 Prestwick Terrace	11542	516-676-1039
NEW YORK (Except City)	Hyde Park	R. P. Kennedy, Inc. Green Tree Drive, North	12538	914-229-2269
	Rochester	R. P. Kennedy, Inc. 39 Saginaw Drive	14623	716-271-6322
NORTH CAROLINA SOUTH CAROLINA EAST TENNESSEE	Raleigh	Component Sales Corporation Post Office Box 6401	27608	919-832-1897
PENNSYLVANIA (Eastern)	Radnor	W. H. Cordray Sales Company 1 Radnor Station	19087	215-687-1366

INTERNATIONAL

CANADA	Ontario	P. J. Heenan Ltd. 12 Doncliffe Drive Toronto		416-486-5353

ECC – ELECTRONIC CONTROL CORPORATION

			Zip Code	Telephone No.	TWX
1011 Pamela Drive, P.O. Box 669, Euless, Texas			76039	817-267-2601	
ARIZONA	Scottsdale	Fred Board Associates P.O. Box 1906	85252	602-949-9561	
CALIFORNIA (Southern) NEVADA (Southern)	Los Angeles	Black & Strong Inc. 1728S La Cienega Blvd.	90035	213-870-9191	910-340-6369
	San Diego	Black & Strong Inc. 7961 Engineer Road	92111	714-279-6363	910-335-1529
CALIFORNIA (Northern) NEVADA (Northern)	San Mateo	Jack Pyle Company 1611 Borel Place Suite 4	94402	415-349-1266	
COLORADO NEW MEXICO (Northern UTAH WYOMING	Wheatridge	Waugaman Associates Inc. 4643 Wadsworth	80033	303-423-1020	910-939-0750
FLORIDA	Melbourne	Hanson Associates Inc. P.O. Box 26	32901	305-727-7474	
ILLINOIS (Northern) IOWA (Eastern)	Chicago	INCO Electronics Corp. 8550 W. Bryn Mawr Ave.	60631	312-693-3380	
INDIANA	Indianapolis	Robert O. Whitesell & Assoc. 6691 E. Washington St.	46219	317-359-9233	810-341-3320
	Fort Wayne	Robert O. Whitesell 3426 Taylor Street	46804	219-432-5591	810-332-1416
	Kokomo	Robert O. Whitesell 3827 S. LaFountain Sq.	46901	317-453-6868	810-269-1917

Continued on next page

ECC — ELECTRONIC CONTROL CORPORATION (Cont'd)

			Zip Code	Telephone No.	TWX
1011 Pamela Drive, P.O. Box 669, Euless, Texas			76039	817-267-2601	
KENTUCKY	Louisville	Robert O. Whitesell Lex-Manor Bldg. 3620 Lexington Road	40207	502-893-7303	
MASSACHUSETTS CONNECTICUT (Northern) MAINE NEW HAMPSHIRE VERMONT	West Concord	Sales Engineering Co. Baker Avenue	01781	617-369-3940	
MICHIGAN (Eastern)	Southfield	Robert O. Whitesell Southfield Center Bldg. 25100 Evergreen Road	48075	313-358-2020	810-224-4939
MICHIGAN (Western)	St. Joseph	Robert O. Whitesell Shepard & Benning Blvd. Room 214	49085	616-983-7337	810-270-3180
MINNESOTA IOWA (Northern) NORTH DAKOTA SOUTH DAKOTA WISCONSIN (Western)	Minneapolis	Electric Component Sales 6524 Walker Street	55426	612-929-4494	
MISSOURI ILLINOIS (Southern) IOWA (Southern) KANSAS NEBRASKA (Eastern)	Grandview	Centech Sales Post Office Box 310	64030	816-763-2900	
	St. Louis	Centech Sales Post Office Box 5932		314-522-1700	
NEW YORK CITY NEW JERSEY (Northern) CONNECTICUT (Southern)	Great Neck (L.I.)	Cooper-Simon & Co., Inc. 38 Middle Neck Road	11021	516-487-1142	

Continued on next page

ECC – ELECTRONIC CONTROL CORPORATION (Cont'd)

			Zip Code	Telephone No..	TWX
1011 Pamela Drive, P.O. Box 669, Euless, Texas			76039	817-267- 2601	
NEW YORK	Rochester	Elcom Sales Inc. P.O.Box 9112	14625	716-385-1400	
	Binghamton	Elcom Sales Inc P.O. Box 134	13903	607-723-9270	
	Whitesboro	Elcom Sales Inc. P.O. Box 38	13493	315-732-6445	
NORTH CAROLINA SOUTH CAROLINA VIRGINIA (Southern)	Raleigh	Robert W. Chapman & Co Post Office Box 17635	27609	919-787-8731	
	Charlotte	Robert W. Chapman & Co. 4732 Old Pineville Rd. Post Office Box 15415	28210		
OHIO	Cincinnati	Robert O. Whitesell 1172 W. Galbraith Street	45231	513-521-2290	810-465-8330
	Cleveland	Robert O. Whitesell Magek Bldg. 21139 Lorain Avenue	44126	216-333-2585	810-421-8521
	Dayton	Robert O. Whitesell 4133 Dixie Avenue	45439	513-298-9546	810-459-1827
PENNSYLVANIA (Western)	Pittsburgh	Robert O. Whitesell Penn Center Bldg. 201 Penn Center Blvd.	15235	412-242-0100	
PENNSYLVANIA (Eastern) DELAWARE MARYLAND NEW JERSEY (Southern) VIRGINIA (Northern)	Bala Cynwyd	Martin Friedman Assoc. Inc. 7 Heather Road	19004	215-839-3450	

Continued on next page

ECC – ELECTRONIC CONTROL CORPORATION (Cont'd)

	Zip Code	Telephone No.	TWX
1011 Pamela Drive, P.O. Box 669, Euless, Texas	76039	817-267-2601	

TEXAS ARKANSAS LOUISIANA OKLAHOMA	Dallas	Wm. Reese Assoc. Electronics 3131 Stemmons Expressway Post Office Box 24410	75224	214-638-6575
	Houston	Wm. Reese Assoc, Electronics Post Office Box 26247	77032	713-621-3134
WASHINGTON IDAHO MONTANA OREGON	Bellevue	Gaskin & Associates 300-120th Ave. N.E Building 2, Suite 210	98005	206-455-3460
WISCONSIN (Western)	Oak Creek	Erdman Sales Company 6312 South 27th Street	53154	414-761-2120

ETC – ELECTRONIC TRANSISTORS CORPORATION

	Zip Code	Telephone No.
153-13 Northern Boulevard, Flushing, New York	11354	212-539-6700

CALIFORNIA (Southern)	Van Nuys	Tim-Co Sales Company 16024 Sherman Way	91406	213-873-4940
OHIO	Dayton	Lionel S. Fedotin 3680 Dorset Drive	45405	513-275-9345

EMLS – EMIHUS MICROCOMPONENTS LIMITED

	Telephone No.	Telex
Glenrothes, Fife, Scotland	Glenrothes 4311	72148

ENGLAND	Middlesex	Emihus Microcomponents Ltd. Clive House 1218 Queens Road Weybridge	Weybridge 47262	23613

Manufacturers' Local Offices

FSC – FAIRCHILD SEMICONDUCTOR

DIV. of FAIRCHILD CAMERA & INSTRUMENT CORP.	Zip Code	Telephone No.	TWX
464 Ellis Street, Mountain View, California	94040	415-962-5011	910-379-6435 Cable FAIRSEMCO

INTERNATIONAL

FRANCE	75 Paris 13	Fairchild Semiconducteurs S.A. 87 Avenue d'Italie	588 37 85	20614
GERMANY (European Headquarters)	6202 Wiesbaden-Biebrich	Fairchild Halbleiter GmbH Hagenauer Strasse 38	06121/205(1)	04186588
	6200 Wiesbaden	Fairchild Halbleiter GmbH Wilhelmstrasse 40		
	3000 Hanover	Fairchild Halbleiter GmbH Konigsworther Strasse 23	0511/17844	0922922
	8000 Munchen 2	Fairchild Halbleiter GmbH Bayerstrasse 15	0811/593632	0524831
	7000 Stuttgart-Nord	Fairchild Halbleiter GmbH Parler Strasse 65	0711/223575	
ITALY	20133 Milan	Fairchild Semiconduttori S.p.A. Via Giovanni Pascoli 60	236 65 35	34338
SWEDEN	11626 Stockholm	Fairchild Semiconductor AB Kvarngatan 14	443255	17759
UNITED KINGDOM	Hertfordshire	Fairchild Semiconductor Ltd. Kingmaker House Station Road New Barnet	440 73 11	262835

Manufacturers' Local Offices

FERB – FERRANTI LIMITED

			Telephone No.	Telex
Gem Mill, Chadderton, Oldham, Lancaster, England			061-624-6661	668038
AUSTRALIA	Sydney N.S.W.	Noyes Bros. Pty. Ltd. General Post Office Box 1587	43-0466	AA20745
CANADA	Ontario	Ferranti Electronics A Division of Ferranti-Packard Electric Ltd. Industry St., Toronto 15	416-762-3661	TWX 610-491-1434
DENMARK	Copenhagen F.	Fredslund Pedersen Finsensvej 39	GODTHAB (0136)9050	5052
ENGLAND	London S.W.1	Ferranti Ltd. Millbank Tower Millbank	01 834 6611	264055
FRANCE	Paris 15e	CERAM 31, Rue du Docteur Finlay	273-07-20	65374
GERMANY	5 Cologne	Anglia Elektrotechnik Apostelnstrasse 1-3	221 210936	8-882897
	8 Munich 2	Neumuller and Co. GmbH Karlstrasse, 55	59 24 21	5-22106
ITALY	20122 Milano	Messrs. Mottola Piazzetta U. Giordano 2	780-231	31317
SWEDEN	Stockholm	Sonab Development A.B. Fack S-171 20 Solna	08/282620	174 74
U. S. A.	New York 11803	Ferranti Electric Inc. East Bethpage Road Plainview, Long Island	516-293-8383	510-224-6483

GIC – GENERAL INSTRUMENT CORPORATION

SEMICONDUCTOR PRODUCTS GROUP
SALES HEADQUARTERS

			Zip Code	Telephone No.	TWX
600 West John Street, Hicksville, Long Island, N. Y.			11802	516-733-3333	510-221-1866
CALIFORNIA	Los Angeles	General Instrument Corp. 5410 W. Imperial Highway	90045	213-641-7411	910-328-7248
ILLINOIS	Chicago	General Instrument Corp. 7366 North Lincoln	60646	312-774-7800	910-223-4545

Manufacturers' Local Offices

GSE – GENERAL SEMICONDUCTOR INDUSTRIES, INC.

	Zip Code	Telephone No.	TWX
230 West 5th Street, P.O. Box 3077, Tempe, Arizona	85281	602-966-7263	910-950-1942

IDC – INTERNATIONAL DIODE CORPORATION

	Zip Code	Telephone No.
90 Forrest Street, Jersey City, New Jersey	07304	201-432-7151

INRC – INTERNATIONAL RECTIFIER CORPORATION

	Zip Code	Telephone No.	Telex
233 Kansas Street, El Segundo, California	90245	213-678-6281	06-74666 TWX 213-322-2623

ALASKA	Anchorage	Harry J. Lang & Associates 1406 47th Avenue	99503	907-279-5741	
ARIZONA	Phoenix	Shefler-Kahn Company 2017 North 7th Street	85001	602-258-7893	TWX 910-951-0659
CALIFORNIA	Los Angeles	International Rectifier 1325 El Segundo Blvd. El Segundo	90245	213-678-2181	
	Mountain View	R. A. Hartman 1901 Old Middlefield Way Suite 13	94040	415-969-0660	34-8485
	San Diego	King & Cassidy Electronics 8855 Balboa Avenue	92133	714-278-7640	
COLORADO	Denver	Shefler-Kahn Company 2422 South Downing Street	80210	303-733-6330	
FLORIDA	Miami	International Rectifier 4230 South West 15th Street	33134	305-445-5201	
GEORGIA	Atlanta	Grady Duckett Sales Company Post Office Box 29067	30329	404-451-3529	
ILLINOIS	Des Plaines (Chicago)	International Rectifier 2720 Des Plaines Avenue	60018	312-299-7181	72-6455
INDIANA	Indianapolis	International Rectifier 4 Elm Drive Brownsburg	46112	317-852-3623	

Continued on next page

INRC – INTERNATIONAL RECTIFIER CORPORATION (Cont'd)

			Zip Code	Telephone No.	Telex
233 Kansas Street, El Segundo, California			90245	213-678-6281	06-74666 TWX 213-322-2623
IOWA	Cedar Rapids	Seltec Sales Corporation Executive Plaza First Avenue, S.E.	52402	319-362-8155	
MARYLAND	Silver Spring (Washington D. C.)	International Rectifier 8605 Cameron Street	20910	301-589-3305	
MASSACHUSETTS	Arlington (Boston)	International Rectifier 2 Militia Drive	02174	617-643-1608	
MICHIGAN	Livonia (Detroit)	International Rectifier 19500 Middlebelt Road	48152	313-477-3131	
MINNESOTA	Minneapolis	International Rectifier 5009A Excelsior Boulevard	55416	612-920-1200	
MISSOURI	Hazelwood (St. Louis)	International Rectifier 47 Village Square	63042	314-838-6333	
NEW JERSEY	Palisades Park (New York)	International Rectifier 71 Grand Avenue	07650	201-943-4554	
NEW MEXICO	Albuquerque	Shefler-Kahn Company 405 Ortiz N.E. P.O. Box 8342	87108	505-265-7077	
NEW YORK	Buffalo	R. W. Mitscher Company 496 Ellicott Square Bldg.	14203	716-854-2518	9-1268 TWX 710-522-1225
	New York City	See New Jersey Listing		212-565-0882	
NORTH CAROLINA	Charlotte	International Rectifier 1135C Commercial Avenue	28205	704-372-9190	TWX 57-5181
OHIO	Cleveland	International Rectifier 25000 Euclid Avenue	44117	216-261-2135	Telex 98-0263
	Kettering (Dayton)	International Rectifier 3490 South Dixie Drive	45439	513-299-2635	
OREGON	Portland	See Washington Listing			

Continued on next page

INRC — INTERNATIONAL RECTIFIER CORPORATION (Cont'd)

			Zip Code	Telephone No.	Telex
233 Kansas Street, El Segundo, California			90245	213-678-6281	06-74666 TWX 213-322-2623
PENNSYLVANIA	Abington (Philadelphia)	International Rectifier 1355 Old York Road	19001	215-886-0130	
TENNESSEE	Nashville	R. W. Mitscher Company 2508 Stones River Court	37214	615-883-2220	
TEXAS	Dallas	International Rectifier 13125 Tahoe Drive	75240	214-233-7431	
		TESCO 2837 Anode Street	75207	214-358-3521	910-861-4507
WASHINGTON	Seattle (Bellevue)	Vantage Corporation Bldg. 2, Suite 210 300 120th Ave. N.E.	98005	206-455-3460	
WISCONSIN	Milwaukee	International Rectifier 2825 North Mayfair Road	53222	414-258-2280	

(INTERNATIONAL)

BELGIUM Sales Headquarters for Europe	Brussels	International Rectifier Europe, S.A. 202-204 Rue Picard, 1020 Brussels		28 51 40	846-22201 Cable RECTEUROPA
CANADA	Scarborough/ Ontario	International Rectifier Canada Ltd. 330 Nantucket Boulevard		416-755-7793	02-21510
FRANCE	Paris	International Rectifier France S.A. 99 Avenue Verdier, 92 Montrouge		655-53-78	842-21959
GERMANY	6 Frankfurt/Main 1	International Rectifier GmbH Savignystrasse 41		729286	
ENGLAND	Oxted, Surrey	International Rectifier Company (Great Britian) Ltd. Hurst Green	3215		851-95219 Cable RECTENG
ITALY	Borgaro Turin (Sales Headquarters)	International Rectifier Corp. Italiana, SpA Via Privata Liguria 19 10071 Borgaro Turin		49 8484	843-21257 Cable RECTIFIT

ITT – ITT SEMICONDUCTORS

			Zip Code	Telephone No.	Telex
3301 Electronics Way, West Palm Beach, Florida			33407	305-842-2411	513410
ENGLAND	Kent	ITT Semiconductors Ltd. Footscray, Sidcup		Footscray 3333	851-21836
FRANCE	92, Levallors	Intermetall Dep. Semiconductors de la SPI–ITT 86, rue du President Wilson		270 4200	842-626 27
GERMANY	78 Freiburg	Intermetall Halbleiterwerk der Deutsche ITT Ind. GmbH Post Office Box 840		5171	841-72 716
ITALY	Milano	ITT–S Filiale Italiana Piazza De Angeli Nr. 7		46 96 183/198 /202	843-32 351

KEV – KEV ELECTRONICS CORPORATION

	Zip Code	Telephone No.
260 Fordham Road, Wilmington, Massachusetts	01887	617-658-6970

KMC – KMC SEMICONDUCTOR CORPORATION

			Zip Code	Telephone No.	TWX
Parker Road, Long Valley, New Jersey			07853	201-876-3811	510-235-3350
CALIFORNIA	Inglewood	KMC Semiconductor Corp.	90302	213-673-3004	

KSC – KSC SEMICONDUCTOR CORPORATION

	Zip Code	Telephone No.	TWX
SUBSIDIARY of SILICON TRANSISTOR CORP. KSC Way (Katrina Road) Chelmsford, Mass.	01824	617-256-3321	710-343-0576

Manufacturers' Local Offices

LUCB — JOSEPH LUCAS (ELEC.) LIMITED

			Telephone No.	Telex
Mere Green Road, Four Oaks, Sutton Coldfield, Warwickshire, England			021-308-3501	338461
FRANCE	Paris	Lucas Service Europe Boite Postal 85 96 Boulevard du General Leclerc 92-Nanterre	204-54-65	25906 NANTR
SWITZERLAND	8008 Zurich	Joseph Lucas (Switzerland) A.G. Seefeldstrasse 224 Hornegg	47.88.44	54142 CH

MAHA — McKENZIE AND HOLLAND PTY. LTD.

			Zip Code	Telephone No.	Telex
Stephenson Street, Spotswood, Victoria, Australia Postal Address: Box 4, P.O. Newport, Victoria			3015	391-1222	AA 31347 Cable HOLLAND MELBOURNE
AUSTRALIA	Adelaide (So. Australia)	McKenzie & Holland Pty. Ltd. 207-209 Angas Street	5000	23-1144	
	Five Dock (N.S.W.)	McKenzie & Holland Pty. Ltd. 282A Lyons Road	2046	83-4755	
	Northgate (Queensland)	McKenzie & Holland Pty. Ltd. Holland Street	4013	67-1001	

MIC — MICROWAVE ASSOCIATES, INC.

			Zip Code	Telephone No.	TWX
Northwest Industrial Park, Burlington, Massachusetts			01803	617-272-3000	710-332-6789 Telex 94-9464
CALIFORNIA	Sunnyvale	Microwave Associates (West) Incorporated 999 East Arques Avenue	94086	408-736-9330	910-339-9248 Cable MA WEST

Manufacturers' Local Offices

MDC – MICROWAVE DIODE CORPORATION

			Zip Code	Telephone No.	Telex
119 Main Street, Colebrook, New Hampshire			03576	603-237-4822	
CALIFORNIA ARIZONA	Santa Ana	Rical Associates 2306 South Anne Street	92704	714-557-6543	
NEW YORK	Flushing	F & F Associates 71-30 Kissena Blvd.	11367	516-334-1160	
OVERSEAS	Stamford Connecticut	Microwave International Corporation Post Office Box 3266 111 High Ridge Road	06905	203-348-7704	965-957 (MICROKEN STD)

MULB – MULLARD LIMITED

			Zip Code	Telephone No.	Telex
Mullard House, Torrington Place, London W.C. 1, England				01-580-6633	264341 Cable Mullectron London WC1
U. S. A.	New York	Mullard, Inc. 100 Finn Court Farmingdale, Long Island	11735	516-694-8989	961455

EBRG – NORTRON

	Telephone No.	Telex
HERMANN KOEHLER ELEKTRIK GmbH & Co. Oedenberger Strass 55/65 (Postfach 7), Nuernberg 30, Germany	59 16 55	06/23025

PHIC – PHILIPS ELECTRON DEVICES

	Telephone No.	Telex
SEMICONDUCTOR TUBE & COMPONENT DIVISION PHILIPS ELECTRONICS INDUSTRIES LIMITED 116 Vanderhoof Avenue, Toronto 17, Ontario, Canada	416-425-5161	02-2513

PHIN – PHILIPS GLOEILAMPENFABRIEKEN

	Telephone No.	Cable
Eindhoven, Netherlands	040-60000	PHILIPS EINDHOVEN

ARGENTINA	Buenos Aires	Fapesa I.y.C Melincue 2594	50-9941/8155
AUSTRALIA	Artarmon N.S.W.	Philips Industries Ltd. Miniwatt Electronics Div. 20, Herbert Street	43-2171
AUSTRIA	1072 Wien	Wiveg Zieglergasse 6	93 26 22
BELGIUM	Brussels	M. B. L. E. 80 Rue des Deux Gares	23 00 00
BRAZIL	Sao Paulo	Ibrape S. A. Av. Paulista 2073-S/Loja	93-5141
CANADA	Toronto 17 (Ontario)	Philips Electron Devices (PHIC)* 116 Vanderhoof Ave.	425-5161
CHILE	Santiago	Philips Chilena S. A. Av. Santa Maria 0760	39 40 01
DENMARK	Kobenhavn NV	Miniwatt A/S Emdrupvej 115A DK-2400	(01)69 16 22
FINLAND	Helsinki 10	Oy Philips A. B. Elcoma Division Kaivokatu 8	10 915
FRANCE	Paris 11	R. T. C. (RADF)* La Radiotechnique Compelec Avenue Ledru Rolin 130	357-69-30
GERMANY	2 Hamburg 1	Valvo GmbH (VALG)* Valvo Haus Burchardstrasse 19	(0411)33 91 31
GREAT BRITAIN	London W.C.1	Mullard Ltd. (MULB)* Mullard House Torrington Place	01-580-6633
HONG KONG	Hong Kong	Philips Hong Kong Ltd. Components Dept. St. George Bldg., 21st Floor	K-42 82 05

Continued on next page

* Manufacturer Code inside ( ) can be found in Section 19, Manufacturers Code Names & Addresses

PHIN — PHILIPS GLOEILAMPENFABRIEKEN (Cont'd)

			Telephone No.	Cable
Eindhoven, Netherlands			040-60000	PHILIPS EINDHOVEN
INDIA	Bombay 18 (WB)	Inbelec Div. of Philips India Ltd. Bandbox Bldg. 254-D, Dr. Annie Besant Road Worli	45 33 86 45 64 20 45 29 86	
ITALY	Milano	Philips S.p.A. Sezione Elcoma Piazza IV Novembre 3	6994	
JAPAN	Tokyo	Nihon Philips 32nd Fl. World Trade Center Bldg. 5,3-chome, Shiba Hamamatsu-cho Minato-ku	(435)5204-5	
MEXICO	Mexico 6, D. F.	Electronica S. A. de C. V. Varsovia No. 36	5-33-11-80	
NETHERLANDS	Eindhoven	Philips Nederland N. V. Afd. Elonco Boschdijk, VB	(040)43 33 33	
NORWAY	Oslo 3	Electronica A/S Middelthunsgate 27	46 39 70	
SOUTH AFRICA	Johannesburg	EDAC(Pty) Ltd. South Park Lane New Doornfontein	24/6701-2	
SPAIN	Barcelona	Copresa S. A. Balmes 22	2 32 03 00	
SWEDEN	10250 Stockholm 27	Elcoma A. B. Lidingovagen 50	08/67 97 80	
SWITZERLAND	Zuerich	Philips A. G. Edenstrasse 20 CH-8027	051/44 22 11	
TAIWAN	Taipei	Philips Taiwan Ltd. Elcoma Division Plastic Bldg. 10th Fl. No. 1, Sec. 2 Nanking East Road	55 97 42	
UNITED STATES	Rhode Island	Amperex Electronic Corp. (APX)* 02876 Sem and Microcircuits Div. Providence Pike Slatersville	401-762-9000	

* Manufacturer Code inside ( ) can be found in Section 19, Manufacturers Code Names & Addresses

PPC – POWER PHYSICS CORPORATION

	Zip Code	Telephone No.	TWX
Industrial Way West, Post Office Box 626, Eatontown, New Jersey	07724	201-542-1393	710-722-6646 Telex 132-445
CALIFORNIA ..... Newport Beach ..... Power Physics Corporation 301 Marine Avenue Post Office Box 381	92662	714-675-1881	TWX 910-596-1387

INTERNATIONAL

			Telex
GERMANY ..... 62 Wiesbaden ..... Power Physics GmbH Nerotal 46A		06121/52 22 97	84141/86230

SAR – SARKES TARZIAN, INC.

SEMICONDUCTOR DIVISION

	Zip Code	Telephone No.	TWX
415 North College Avenue, Bloomington, Indiana	47401	812-332-1435	810-351-1384

ALABAMA	Huntsville	Murphy & Cota 904 Bob Wallace	35804	205-539-8476
CALIFORNIA	San Marino	Van Gott Associates P.O. Box 8401	91108	213-282-5823
COLORADO	Denver	Art Nelson Company 1294 South Bannock	80222	303-733-5528
FLORIDA	Orlando	Murphy & Cota 712 West Vassar Avenue	32804	305-424-2407
GEORGIA	Atlanta	Murphy & Cota 500 Plasamour Drive, NE	30324	404-875-2525
ILLINOIS	Skokie	Saffro & Associates 3736 Dempster	60676	312-588-0905
KANSAS	Prairie Village (Kansas City)	Thunderbird Sales & Eng. Service 4014-A West 95th Street	66208	913-642-7220
MASSACHUSETTS	Reading	Charles E. Godfrey Company Post Office Box 68	01867	617-944-2230

Continued on next page

SAR – SARKES TARZIAN, INC. (Cont'd)

SEMICONDUCTOR DIVISION			Zip Code	Telephone No.	TWX
415 North College Avenue, Bloomington, Indiana			47401	812-332-1435	810-351-1384
MICHIGAN	Ft. Wayne (Indiana)	R. G. Frederick Company 252 Pontiac Street	46803	219-774-0641	219-241-4121
	Battle Creek	Frederick & Meily 157 Cameron	49014	616-963-0230	
MINNESOTA	Minneapolis	Scott Electronic Sales 5209 West 60th	55424	612-929-2985	
MISSOURI	St. Louis	Thunderbird Sales & Eng. Service P.O.Box 12849	63042	314-542-6488	
NEW YORK	New York City	Simberkoff Sales		212-943-7023	
NEW JERSEY	South Orange	Simberkoff Sales Company 71 Valley Street	07079	201-763-7900	710-999-5517
NORTH CAROLINA	Winston Salem	Murphy & Costa Company 1106 Burke Street	27101	919-723-1001	510-931-3101
OHIO	Wickliffe	Del Steffen & Associates 30212 Lakeland Blvd.	44123	216-944-8080	
	Dayton	Del Steffen & Associates 1201 Hempstead Road	45429	513-293-3145	
TEXAS	Dallas	John Guenther Company 5121 McKenney Avenue	75205	214-528-6286	
WASHINGTON	Seattle	M. K. Widdekind Company 815 West Ewing Street	98119	206-284-8020	
WASHINGTON, D.C.		Simberkoff Sales 420 North Arlington Towers Arlington, Virginia	21204	703-525-5898	
EXPORT	New York	Ad Auriema, Inc. 120 Liberty Street	10004	212-349-8220	
CANADA	Ontario	Frank Eakin 9 Milvan Drive, Weston		416-741-7485	

SCO – SCIENTIFIC COMPONENTS, INC.

			Zip Code	Telephone No.
350 Hurst Street, Linden, New Jersey			07036	201-925-4022
CALIFORNIA (Northern)	Burlingame	Leddy Associates 1319 Howard Avenue	94010	415-347-5247
(Southern)	Whittier	DeAngelo, Rothman & Co. 11936 E. Washington Blvd.	90606	213-945-2341
ILLINOIS	Chicago	Nu-tronix Sales Corporation 4475 North Elston	60630	312-736-6023
NEW JERSEY & MET. N.Y.	Hillsdale	RCM Associates 115 Legion Place	07642	201-666-0205
NEW YORK	Syracuse	W. A. Franklin Sales Corporation 2 Standish Terrace	13224	315-446-1120
PENNSYLVANIA	Philadelphia	Charles Newson & Associates 711 Bethlehem Pike	19118	215-248-3377

SCA – SEMICOA

			Zip Code	Telephone No.	TWX
940 South Ajax Avenue, City of Industry, California			91744	213-965-2496	
CALIFORNIA (Southern)	Costa Mesa	Rical Associates 260 Nassau Road	92626	714-557-6543	
ILLINOIS	Chicago	G. McL. Cole Co. 6514 W. Higgins Road	60656	312-774-3535	910-221-2929
MASSACHUSETTS	Lexington	Contact Sales Company 594 Marrett Road	02133	617-861-8544	

SCN – SEMICON, INCORPORATED

	Zip Code	Telephone No.	TWX
10 North Avenue, North West Industrial Park Burlington, Massachusetts	01803	617-272-9015	710-332-1919

SEKG — SEMIKRON GESELLSCHAFT FUR GLEICHRICHTERBAU

	Zip Code	Telephone No.	Telex
Wiesentalstrasse 40, 8500 Nurnberg, Germany		0911/37781	06/22155

SES — SEMITRONICS CORPORATION

			Zip Code	Telephone No.	TWX
265 Canal Street, New York, New York			10013	212-226-5400	710-581-3978
MISSOURI	Kansas City	Nevco Incorporated 1715 Baltimore	64108	816-421-1751	
PENNSYLVANIA	Philadelphia	David Linz 238 Shelmire Street	19111	215-379-0734	

INTERNATIONAL

					Cable
PHILIPPINES	Rizal	Semitronics Corporation Green Hills, Box 445 San Juan		704280	VALEX

SET — SEMTECH CORPORATION

			Zip Code	Telephone No.	TWX
652 Mitchell Road, Newbury Park, California			91320	213-628-5392	910-336-1264
CALIFORNIA	Palo Alto	Semtech Corporation 941 East Charleston Suite 10	94303	415-328-8025	
FLORIDA	Winter Park	Semtech Corporation 2304 Aloma Ave. Room 2	32789	305-644-5405	
ILLINOIS	La Grange	Semtech Corporation 140 North La Grange Road	60525	312-352-3227	910-683-1896
NEW JERSEY	Moorestown	Semtech Corp. 209 Chester Avenue - Rm. 5	08057	609-234-1244	
NEW YORK	Forest Hills	Semtech Corporation 116-55 Queens Boulevard	11375	212-263-3115	710-582-2959
TEXAS	Irving	Semtech Corporation 402 Irving Bank Tower	75060	214-253-7644	

SEN – SENSITRON SEMICONDUCTOR

	Zip Code	Telephone No.
DIV. OF RSM ELECTRON POWER CORP. 221 West Industry Court, Deer Park, New York	11729	516-586-7600

SRPJ – SHARP CORPORATION

INDUSTRIAL INSTRUMENTS DIVISION Yamatokooriyama, Nara 639-11, Japan				Telephone No. 07435-2-5521	Telex LABOMET OS3428 SNK Cable LABOMETSANKI OSAKA
U. S. A.	New Jersey	Sharp Electronics Corporation 10 Keystone Place Paramus,	07652	201-265-5600	

SHWG – SIEMENS AKTIENGESELLSCHAFT

			Zip Code	Telephone No.	Telex
Balanstrasse 73, 8000 Munich 80, Germany				0811-45901	05-22961
CANADA	Montreal	Siemens Canada, Limited Post Office Box 7300 Pointe-Claire P. Q.		514-695-7300	05-26-7300
ENGLAND	London	Siemens U.K. Ltd. 36 Church Road Croyden CRO ASG.		01-686-7581	22438
U. S. A.	New Jersey	Siemens Corporation 186 Wood Avenue South Iselin	08830	201-494-1000	844491 TWX 710-998-0588

ESMF — SOCIETE EUROPEENNE DES SEMICONDUCTEURS ET DE MICROELECTRONIQUE

			Telephone No.	Telex
101 Bd Murat, 75-Paris-16E, France			525-75-75	28060
ARGENTINA	Buenos Aires	Corte Et Mon San Juan 1 301		
AUSTRALIA	South Melbourne	Pantechna Pty. Ltd. 8-12 Eastern Road	69.26.29	Pantechna
AUSTRIA	A 1010—Wien	Transalpina Electronica Ltda. Elisabethstrasse 8	56.15.71	Inland 12 717
BELGIUM	B1050 Bruxelles 5	Thomson S.A.—N.V. Avenue Louise 196A	49.29.54	23 113
BRAZIL	Sao Paulo	Thomson CSF do Brasil Avenue Ibirapuera 2572		Tesalfina Sao Paulo
CANADA	Ontario	E. G. Lomas Ltd. 227 Laurier Avenue Ottawa 4		
CHILE	Santiago	Agencias Unidas Ltd. Huerfanos 1078 Casella 119D		
DENMARK	Copenhagen	EV. Johanssen A/S Scherfigsvej 1	29.56.22	2771
ENGLAND	London W5	Thomson-CSF (U.K.) Ltd. Bilton House Uxbridge Road Ealing	579 18 57	Tesafi 25 659
FINLAND	Helsinki 25	OY Sufra AB Ruusulankatu 20 A 12	49.01.37	Pierrejoly
FRANCE	93-Bagnolet	Codirel 105, Rue Sadi-Carnot	287.49.99	
	92-Boulogne	Les Composants Electroniques 160, Route de la Reine	604.10.20	
	29N-Brest	Bellion et Cie 40, Quai de l'Ouest	(98) 44.88.00	
	63-Clermont-Ferrand	Centre Electronique Diffusion Rue Bernard-Brunhes	(73) 92.14.77	39.926

Continued on next page

ESMF — SOCIETE EUROPEENNE DES SEMICONDUCTEURS ET DE MICROELECTRONIQUE (Cont'd)

			Telephone No.	Telex
101 Bd Murat, 75—Paris—16e, France			525 75 75	28060
FRANCE	92-Courbevoie	Cifte 50, Rue J. P. Timbaud	333.37.50	
	38-Grenoble	Radialex 3, Rue Moyrand	(76) 87.35.97	
	69-Lyon-6e	Radialex 74, Rue Vendome	(78) 24.51.78 (78) 24.12.35	30.238
	13-Marseille-6e	Cabus et Raulot 49, Rue de Village	(91) 47.58.10	
	93-Montreuil sous Bois	Thomson-C.S.F. Composants Export 128, Rue de Paris	287.80.90	20936
	75-Paris-2e	Cie Continentale Electronique 33, Rue Vivienne	508.12.42	
	76-Rouen	Electrotechnique de Normandie 8, Rue de la Croix d'Yonville	(35) 70.05.75	
	42-Saint-Etienne	Teissier J.J. S.A. 2 Rue Basse des Rives	(77) 33 12 34	33 666
	59-Seclin	Side Zone Industrielle	(20) 59 67 72	82 520
	67-Strasbourg	Selfco 31 Rue du Fosse des Treize	(88) 32 59 33	
	83-Toulon	Dimel 39, Avenue Marceau	(94) 92.37.93	
	31-Toulouse	Sodimep 8, Rue Jean-Suau	(61) 22.40.12 (61) 22.41.88	
GERMANY (East)	Berlin 31	Thomson-C.S.F. Buro Emserstrasse 2 Ecke Hohenzollerndamm		
(West)	8000 Munchen 25	Sescosem Halbleiter GmbH Fallstrasse 42	811.73.10.42	522.916
INDIA	Bombay 9	N. J. International Corporation 65, Ashok Chambers Broach Street		

Continued on next page

ESMF — SOCIETE EUROPEENNE DES SEMICONDUCTEURS ET DE MICROELECTRONIQUE (Cont'd)

			Telephone No.	Telex
101 Bd Murat, 75-Paris-16E, France			525 75 75	28060
ISRAEL	Tel Aviv	Cidev 47, Rothschild Boulevard Post Office Box 2024		
ITALY	20 125 Milano	Mistral S. p. A. Via Melchiorre Gioia, 72	68 84 103	Ducati 31. 042
MEXICO	Mexico 6—D.F.	Thomson-C.S.F. De Mexico Hamburgo 108.301		
MOROCCO	Casablanca	Ste De Fabrications Radioelectriques Marocaines 32, Boulevard de La Resistance Palais Mirabeau	921.23	
NORWAY	Oslo 4	Feiring AS Sandakervein 46 B Box 4376, Torshov	21.82.12	6 435, feiring 0
PORTUGAL	Lisboa	Sd. Com. Rualdo Rua S. Jose 15		
SOUTH AFRICA	Dunswart	Allied Electric Pty. Post Office Box 90	52.43.41	Solidstate Dunswart
	Johannesburg	Fuchs Electronics Pty. Ltd. 191 Eloff Street Extension	836 75 26	J-7634
SPAIN	San Juan Despi (Barcelona)	Componentes Electronicos S.A. Poligono Industrial Fontsanta Calle H.S/N	250.91.74	52 077
SWEDEN	S17 103 Solna 3	Elektroholm AB Dalvagen 12 Post Office Box 305	82.02.80	1389
SWITZERLAND	CH3000 Berne 9	Modulator S.A. Fischerweg 11-13	23.77.85	32.431
THE NETHERLANDS	La Haye	C.G.E.—Compagnie Generale D'Electricite N.V. Koninginnegracht 64	60.88.10	31 045
	Amsterdam-C	Mijnssen and Co. N. V. Keizersgracht 369 Post Office Box 123	23 95 43	14 065
U. S. A.	Canoga Park (Calif. 91303)	Nucleonic Products Company Inc. 6660 Variel Avenue	213-887-1010	651 479

SSI — SOLID STATE DEVICES, INC.

			Zip Code	Telephone No.	TWX
12741 Los Nietos Road, Santa Fe Springs, California			90670	213-698-0529 213-698-3711	910-586-1881
ALABAMA	Mt. Brook	The Beatty Company 2777 Montevallo Road	35223	205-879-3774	
ARIZONA	Phoenix	J. Smith & Associates 11032 N. 54th Avenue	85029	602-942-3233	
CALIFORNIA	Mt. View	Nor-Cal Associates 2680 Bayshore Frontage Road Suite 404	94040	415-961-8121	910-379-6497
	Pasadena	William Kath Associates 255 West State Street	91105	213-682-1377	
	San Diego	Earle & Associates 4433 Convoy Street Suite A	92111	714-278-5441	
	Tustin	RMS Associates 13652 Fairmont Way	92680	714-541-3295	
COLORADO	Boulder	J. Smith & Associates Post Office Box 3257	80303	303-449-7509	
FLORIDA	Winter Park	GPI Instruments Post Office Box 536	32789	305-831-6215	
ILLINOIS	Chicago	Communications Engineers 7106 North Western Avenue	60645	312-761-0548	
INDIANA	Fort Wayne	Communications Engineers 418 East Berry Street	46802	219-743-9866	
	Franklin	Communicatioins Engineers 1624 Roberts Road	46131	317-783-7143	
KANSAS	Wichita	Eugene Carbiener Associates 6814 Farmview	67206	316-682-5782	
MASSACHUSETTS	Brookline	Technology Products Group 233 Harvard Street	02146	617-731-0858	
MINNESOTA	Minneapolis	Murphy Associates, Inc. 730 Chicago Avenue	55415	612-333-4511	
NEW JERSEY	Riverdale	Comp-Tech Sales Post Office Box 50	07457	201-835-0332	

Continued on next page

SSI — SOLID STATE DEVICES, INC. (Cont'd)

			Zip Code	Telephone No.	TWX
12741 Los Nietos Road, Santa Fe Springs, California			90670	213-698-0529	910-586-1881
NEW MEXICO	Albuquerque	J. Smith & Associates Post Office Box 4812 401-B, San Pedro, N.E.	87108	505-255-2111	
NEW YORK	Cazenovia	Arthur L. Perkins Co. 4994 East Road	13035	315-682-5005	
	Lynbrook	Comp-Tech Sales Post Office Box 384	11563	516-593-2628	
OHIO	Dayton	Communications Engineers 34 North Clinton Street	45402	513-434-6871	
PENNSYLVANIA	Philadelphia	Schibley Associates, Inc. 11110 Autobonn Avenue	19116	215-676-9885	
TEXAS	Houston	Ev Smith Sales Company Post Office Box 12583	77017	713-649-5756	
VIRGINIA	Fairfax	Schibley Associates, Inc. 10604 Warwich Avenue	22030	703-591-4593	710-833-0697

INTERNATIONAL

CANADA	Quebec	Future Electronics Corporation 6655 Cote Des Neiges Suite 310 Montreal	251	514-735-5775	610-421-3251
	Ontario	Future Electronics Corporation 5 Dufresne, Suite 4 Don Mills		416-429-0044	
GERMANY (West)	D-605 Offenbach am Main	Neutron GmbH Bieberer Strasse 251		(0611)853638	
ISRAEL	Tel-Aviv	Telsys Ltd. Engineering Co. 21, Haifa Road		252839	
JAPAN	Tokyo 160	MTT International Inc. 401 Onoshow, Bldg. 6 Samon-Cho, Shinjuku-ku		(03)3594648	
PAKISTAN	Karachi 3	Mesco Engineering 67, Farid Chambers Abdullah Haroon Road		514302	

Manufacturers' Local Offices

SST – SOLID STATE INDUSTRIES

			Zip Code	Telephone No.	TWX
102 Hobart Street, Hackensack, New Jersey			07601	201-343-7744	
WASHINGTON, D.C.		Solid State Industries International 1060 Thomas Jefferson St., N.W.	20007	202-338-3150	892604 SOLID STATE
INTERNATIONAL					
WEST GERMANY	Dortmund 46	Solid State Industries Europe, GmbH Viktoria Strasse 15		231-528065	822382

SOD – SOLITRON DEVICES, INC.

			Zip Code	Telephone No.	TWX
Corporate Offices, 256 Oak Tree Road, Tappan, New York			10983	914-359-5050	710-576-2654
CALIFORNIA	Canoga Park	Solitron Devices, Inc. 20944 Sherman Way	91303	213-883-3822	910-494-1238
	San Diego	Solitron Devices, Inc. 8808 Balboa Avenue	92123	714-278-8780	910-335-1221
FLORIDA	Riviera Beach	Solitron Devices, Inc. 1177 Blue Heron Blvd.	33404	305-848-4311	510-952-6676
ILLINOIS	Des Plaines	Solitron Devices, Inc. 2720 Des Plaines Avenue	60018	312-824-8127	910-233-2634
MARYLAND	Baltimore	Solitron Devices, Inc. 2530 N. Charles Street	21218	301-243-0060	
MASSACHUSETTS	Needham	Solitron Devices Inc. 52 Pickering Street	92192	617-444-1152	710-325-7514
TEXAS	Dallas	Solitron Devices, Inc. 10511 Church Street	75238	214-341-1180	910-861-4296
INTERNATIONAL					
ENGLAND	Kent	Solidev Ltd. Tubbs Hill House North Entrance, London Road Sevenoaks		(0732) 57541	Telex 95378

SONY – SONY CORPORATION

	Telephone No.	Telex
7-35, Kitashinagawa-6, Shinagawa-Ku, Tokyo, Japan Mail Address: Post Office Box 10 Tokyo Airport Post Office	Tokyo 442-5111	SONYCORP TK2262

SYN – SYNTRON

DIVISION OF FMC CORPORATION

			Zip Code	Telephone No.	TWX
1249 Lexington Avenue, Homer City, Pennsylvania			15748	412-479-8011	510-468-9220
CALIFORNIA	Los Angeles	Carl E. Holmes Company 107 North Avenue 64	90042	213-256-2255	910-321-3937
	San Francisco	Syntron San Francisco Sales Co. 819 Mitten Road Burlingame	94010	415-697-1912	
FLORIDA	Orlando	William R. Lehmann Company 1010 Executive Center Drive Post Office Box 20275	32814	305-841-4901	810-850-0162
ILLINOIS	Hinsdale	Syntron Chicago Sales Company 119 East Ogden Avenue	60521	312-325-3250	910-651-3055
MASSACHUSETTS	Needham	Garrettson Company, Inc. 10 Kearney Road	02194	617-449-2640	
MICHIGAN	Detroit	L. H. Dickelman 18315 W. Seven Mile Road	48219	313-255-3300	
MINNESOTA	St. Paul	Northport Engineering Inc. 2027 Grand Avenue	55105	612-698-3841	910-563-3674
MISSOURI	St. Louis	Harlan J. Weisler & Associates Inc. 2050 Woodson Road Suite 213	63114	314-428-3934	
NEW JERSEY	Philadelphia (Pa.)	Garretson Co., Inc. 9214 Masland Street	19115	215-464-2275	
NEW YORK	Yonkers	Syntron New York Sales Company 570 Yonkers Avenue	10704	914-968-2414	
	Rochester	J. Lazor Associates, Inc. 39 Saginaw Drive	14623	716-473-8337	
OHIO	Brecksville	Allen Nace Company Box 156	44141	216-526-4323	810-427-9161
	Dayton	Allen Nace Company, Inc. Box 93 Forest Park Branch	45405	513-277-8215	810-459-1733
	Galion	Allen Nace Co., Inc. Route 3	44833	419-468-7641	
PENNSYLVANIA	Pittsburgh	Allen Nace Company 1725 Washington Road	15241	412-561-3544	
WISCONSIN	Milwaukee	Syntron Milwaukee Sales Company 3904 West Vliet Street	53208	414-342-6010	

TSC – TELEDYNE SEMICONDUCTOR

			Zip Code	Telephone No.	TWX
12515 Chadron Avenue, Hawthorne, California			90250	213-772-4551	910-325-6217 Telex 65-3422
CALIFORNIA	Hawthorne	Teledyne Semiconductor 12515 Chadron Ave.	90250	213-772-4551	910-325-6217
	Mountain View	Teledyne Semiconductor 1300 Terra Bella Avenue	94040	415-968-9241	910-478-6494 Telex 34-8416
	Palo Alto	Teledyne Semiconductor 800 San Antonio Road	94303	415-321-4681	910-373-1750
FLORIDA	Winter Park	Teledyne Semiconductor 124 E. Morse Blvd.	32789	305-647-7813	810-853-0254
ILLINOIS	Des Plaines	Teledyne Semiconductor 6600 N. Mannheim Road	60018	312-299-6196	910-233-0897
MARYLAND	Lutherville	Teledyne Semiconductor 1524 York Road	21093	301-825-1920	710-232-1855
MASSACHUSETTS	Westwood	Teledyne Semiconductor 805 W. High Street	02090	617-326-6600	710-394-6549
NEW JERSEY	Little Falls	Teledyne Semiconductor 19 E. Main Street	07424	201-256-8557	710-988-5719
NEW YORK	Liverpool	Teledyne Semiconductor 312 Riverglen Road	13088	315-622-3413	
	Wappingers Fall	Teledyne Semiconductor 895 South Road, Suite 7	12590	914-297-4316	510-248-0053
OHIO	Dayton	Teledyne Semiconductor 3481 Office Park Drive	45439	513-298-7207	810-459-1867
TEXAS	Dallas	Teledyne Semiconductor 6115 Denton Drive	75235	214-357-0259	910-861-4409

INTERNATIONAL

WEST GERMANY	6200 Wiesbaden	Teledyne Semiconductor 56 Schone Aussicht No. 56		06121-372820	8414186581
HONG KONG	Kowloon	Teledyne Semiconductor 10 Sam Chuk Street, First Floor San Po Kong		K207764	7803549

TII – TEXAS INSTRUMENTS INCORPORATED

			Zip Code	Telephone No.
Components Group, 13500 North Central Expressway, Post Office Box 5012, Dallas, Texas			75222	214-238-2011
ALABAMA	Huntsville	Texas Instruments Sahara Office Park Building Suite 111, 3313 Memorial Parkway, S. W.	35801	205-881-4061
ARIZONA	Phoenix	Texas Instruments United Bank Bldg. 3550 N. Central Ave. Suite 1702	85012	602-279-5531
CALIFORNIA	Hollywood	Texas Instruments 1800 North Argyle Avenue	90028	213-466-7251
	Inglewood	Texas Instruments 5005 West Century Boulevard Suite 208	90301	213-673-3943
	Palo Alto	Texas Instruments 230 California Avenue Suite 201	94306	415-326-6770
	Santa Ana	Texas Instruments 1505 East 17th Street Suite 201	92701	714-547-6506
	San Diego	Texas Instruments 5252 Balboa Avenue Suite 805	92117	714-279-2622
COLORADO	Denver	Texas Instruments 2186 South Holly Street Suite 205	80222	303-758-2151
CONNECTICUT	Woodbridge	Texas Instruments 300 Amity Road	06525	203-389-4521
FLORIDA	Fort Lauderdale	Texas Instruments 601 West Oakland Park Blvd.	33311	305-566-3294
	Orlando	Texas Instruments Orlando Executive Park 5400 Diplomat Circle Diplomat Building Suite 252	32801	305-644-3535
	St. Petersburg	Texas Instruments 300 Bldg. W-Suite 204 3151 3rd Ave., North	33713	813-898-0807

Continued on next page

TII — TEXAS INSTRUMENTS INCORPORATED (Cont'd)

			Zip Code	Telephone No.
Components Group, 13500 North Central Expressway, Post Office Box 5012, Dallas, Texas			75222	214-238-2011
ILLINOIS	Chicago	Texas Instruments Executive Towers Suite 205 5901 North Cicero Avenue	60646	312-286-1000
INDIANA	Ft. Wayne	Texas Instruments 8539 Encanto Way	46805	219-485-1959
MASSACHUSETTS	Waltham	Texas Instruments 60 Hickory Drive	02154	617-891-8450
MICHIGAN	Southfield	Texas Instruments Suite 706 West Northland Towers Bldg. 15565 Northland Drive	48075	313-352-5720
MINNESOTA	Edina	Texas Instruments 7615 Metro Blvd. Suite 202, Analysis Inc. Bldg.	55435	612-941-4384
NEW JERSEY	Springfield	Texas Instruments 25 U. S. Highway No. 22 Post Office Box 366	07081	201-376-9400
NEW MEXICO	Albuquerque	Texas Instruments Suite 9-Marberry Plaza 6101 Marble Ave., N.W.	87110	505-265-8491
NEW YORK	Endicott	Texas Instruments 112 Nanticoke Avenue Post Office Box 618	13760	607-785-9987
	Fishkill	Texas Instruments 167 Main Street	12524	914-896-6793
	Plainview	Texas Instruments 245 Newton Road	11803	516-293-2560
	Syracuse	Texas Instruments 6563 Ridings Road	13206	315-463-9291
NORTH CAROLINA	Greensboro	Texas Instruments 4310 Starmount Drive	27410	919-299-9112

Continued on next page

TII – TEXAS INSTRUMENTS INCORPORATED (Cont'd)

			Zip Code	Telephone No.
Components Group, 13500 North Central Expressway, Post Office Box 5012, Dallas, Texas			75222	214-238-2011
OHIO	Cleveland	Texas Instruments 23811 Chagrin Boulevard Suite 100	44122	216-464-1192
	Dayton	Texas Instruments Paul Welch Building Suite 205 3300 South Dixie Drive	45439	513-298-7513
PENNSYLVANIA	Ft. Washington	Texas Instruments 275 Commerce Drive	19034	215-643-6450
TEXAS	Dallas	Texas Instruments Post Office Box 5012 Mail Station 366	75222	214-238-6805
	Houston	Texas Instruments 3939 Ann Arbor	77042	713-785-6906
WASHINGTON	Seattle	Texas Instruments 5801 Sixth Avenue South	98108	206-762-4240
WASHINGTON	D. C	Texas Instruments 1875 Connecticut Avenue, N. W. Suite 913	20009	202-234-9320
CANADA	Ontario	Texas Instruments 280 Centre Street East Richmond Hill (Toronto)		416-889-7373
		Texas Instruments 5F Caesar Avenue Ottawa 12		
	Quebec	Texas Instruments 2750 Pitfield Blvd. St. Laurent 386		514-332-3550

TAGS – TRANSISTOR AG

	Zip Code	Telephone No.	Telex
Hohlstrasse 610, Zurich, Switzerland	8048	62 5611	53809

TNC – TRW INCORPORATED

			Zip Code	Telephone No.	TWX
Solid-State Operation, 71 Linden Street, West Lynn, Massachusetts			01905	617-598-4800	710-334-0254
NEBRASKA	Ogallala	TRW Incorporated Solid-State Operation 112 West 1st Street	69153	308-284-3611	308-526-7816

TUNL – TUNG–SOL

DIVISION OF WAGNER ELECTRIC CORPORATION			Zip Code	Telephone No.	TWX
One Summer Avenue, Newark, New Jersey			07104	201-484-8500	201-621-7977
ARIZONA	Scottsdale	Bennewitz Associates, Inc. 532 North Brown Avenue	85251	602-947-7379	910-950-0082
CALIFORNIA	Diablo	Thomas Associates Post Office Box 684	94528	415-837-8411	
	El Segundo	Tung-Sol Division Wagner Electric Corporation 610 Lairport	90245	213-322-0708	910-348-7106
	Inglewood	L & M Engineering, Inc. 9911 Inglewood Ave.	90310	213-674-6850	
	South San Francisco	Tung-Sol Division Wagner Electric Corporation 219 Shaw Road	94080	415-588-6908	
COLORADO	Denver	Walter Engineering Associates 880 Bonnie Brae Boulevard	80209	303-777-5585	
ILLINOIS	Elk Grove Village	Tung-Sol Division Wagner Electric Corporation 1700 Elmhurst Road	60007	312-439-1810	
KANSAS	Overland Park	Thomas L. Dowell, Inc. 8151 Marty Street	66204	913-649-6069	910-749-6481
MICHIGAN	Detroit	Hilltronics, Inc. 13720 Puritan Avenue	48227	313-342-3242	
NEW JERSEY	Livingston	Tung-Sol Division Wagner Electric Corporation 630 West Mt. Pleasant Avenue	07039	201-992-1100	710-994-4865
NEW MEXICO	Albuquerque	Bennewitz Associates, Inc. 623 Wyoming S.E.	87108	505-255-8733	910-989-0610
NORTH CAROLINA	Raleigh	A. B. Andrews Company Post Office Box 2627	27602	919-833-5567	
OREGON	Portland	C. K. Shanks & Associates Post Office Box 25375	97225	503-292-5656	
TEXAS	Addison	Parvin Sales Company Addison Road Post Office Box 307	75001	214-239-9148	910-860-5132

UPI — UNITED-PAGE, INCORPORATED

			Zip Code	Telephone No.	TWX
481 Getty Avenue, Paterson, New Jersey			07503	NJ: 201-279-7500 NY:212-736-9351	710-988-5917 Cable UNIPAGE
FLORIDA	Miami	Joe Raulson & Co., Inc. 1525 S.W. 82nd Place	33144	305-226-6013	
HAWAII	Honolulu	Gene Piety Factors Post Office Box 2903 160 Mokauga Street	96802	808-841-0185	Telex 723-423
ILLINOIS	Des Plaines	S. Sterling 1001 E. Touhy Drive	60018	312-298-4830	TWX 910-233-5890
WASHINGTON CALIFORNIA (Northern)	Seattle	Robert R. Slater Terminal Sales Bldg.	98101	206-622-3860	

UNI — UNITRODE CORPORATION

			Zip Code	Telephone No.	TWX
580 Pleasant Street, Watertown, Massachusetts			02172	617-926-0404	710-327-1296
CALIFORNIA	Sherman Oaks	Unitrode Corporation 15300 Ventura Blvd. Suite 410	91403	213-783-1301	910-495-1769
NEW YORK	Union, N.J.	Unitrode Corporation 420 Chestnut Street Suite 9	07083	201-687-0500	
OHIO	West Carrollton	Unitrode Corporation 440 E. Dixie Drive	45449	513-859-5872	

VARO – VARO INC.

SEMICONDUCTOR DIVISION
1000 North Shiloh, Garland, Texas ..... 75040 — Telephone No. 214-272-4551 — TWX 910-860-5178

			Zip Code	Telephone No.	TWX
CALIFORNIA	Los Angeles	Corcoran Associates Post Office Box 45897	90045	213-823-2425 213-823-4589	
	Los Altos	W. W. Posey Company 175 S. San Antonio Road	94022	415-948-7771	
COLORADO	Denver	J. F. Hurlbut Company 1295 S. Bannock Street	80209	303-744-1451	
CONNECTICUT	North Haven	Kitchen & Kutchin Inc. 22 Broadway	06473	203-239-0212	
FLORIDA	Orlando	Buchanan & Abrams Associates, Inc. Post Office Box 6026	32803	305-423-8995	
ILLINOIS	Lombard	Olson Sales Company 837 S. Westmore Ave.	60148	312-627-3802	
(Southern)	St. Louis (Missouri)	Coombs Associates, Inc. 11734 Lackland Industrial Dr.	63141	314-542-3636	910-764-0839
INDIANA	Indianapolis	Technical Representatives Suite 115 4000 Meadows Drive	46205	317-546-4967	810-341-3417
KANSAS	St. Louis (Missouri)	Coombs Associates, Inc. 11734 Lackland Industrial Dr.	63141	314-542-3636	910-764-0839
MASSACHUSETTS	Lexington	Kitchen & Kutchin Inc. 17 Waltham Street	02173	617-862-8230	710-326-0597
MICHIGAN	Farmington	Davis-Martensen Company 22725 Orchard Lake Road Suite 7	48024	313-474-8300	
MINNESOTA	Minneapolis	Loren F. Green 6225 University Avenue, N.E.	55432	612-781-1611	
MISSOURI	St. Louis	Coombs Associates, Inc. 11734 Lackland Industrial Drive	63141	314-542-3636	910-764-0839
NEW JERSEY (Northern)	Great Neck (N.Y.)	Cooper-Simon 38 Middle Neck Rd.	11021	516-487-1142	
NEW YORK (Metro)	Great Neck	Cooper-Simon & Company 38 Middle Neck Road	11021	516-487-1142	

Continued on next page

VARO — VARO INC. (Cont'd)

			Zip Codee	Telephone No.	TWX
SEMICONDUCTOR DIVISION 1000 North Shiloh, Garland, Texas			75040	214-272-4551	910-860-5178
NEW YORK	Ithaca	Bob Dean, Inc. 714 West Clinton Street	14850	607-272-2187	510-255-5876
OHIO	Dayton	J. C. Hofstetter Company 3300 South Dixie Drive	45439	513-298-0662	810-459-1734
	Medina	J. C. Hofstetter Company 5168 Valley View Drive	44256	216-241-4880	
OREGON	Portland	C. K. Shanks & Associates 3176 S.W. 87th Avenue	97225	503-292-5656	
PENNSYLVANIA	Pittsburgh	J. C. Hofstetter Co. 176 Reed Drive	15205	412-922-3890	
TEXAS	Richardson	Whiteside Sales Company Post Office Box 814	75080	214-231-9771	
UTAH	Salt Lake City	J. F. Hurlbut Company 3605 S. Bannock Street	84120	801-299-4321	
VIRGINIA	Fairfax	Tom Davis Marketers, Inc. 10713 Almond Street	22030	703-591-7390	
CANADA	Quebec	Audio Electronics, Inc. 8235 Mountain Sights Ave. Montreal 308		514-735-6197	

WAB — WALBERN DEVICES, INC.

			Zip Code	Telephone No.	TWX
1818 East Elizabeth Avenue, Linden, New Jersey			07036	201-486-2226	
MASSACHUSETTS	Waltham	Impact Sales Company, Inc. 223 Cresent Street	02154	617-893-2850	710-324-6655
MISSOURI	St. Louis	Ozark Electronic Marketing, Inc. 2573 Woodson Road	63114	314-423-7200	
NEW YORK	Metropolitan Area	Cambridge-Allen & Associates 520 Fifth Avenue	10036	212-267-2267	
NEW JERSEY PENNSYLVANIA	Camden	J. N. Barrett Assoc., Inc. 140 Barclay Center Route 70	08034	215-627-0149 609-429-1551	710-896-0881
CONNECTICUT	Hamden	Impact Sales Company, Inc. 60 Connolly Parkway Building 1 Room 7	06514	203-248-9368	

WESY – WESTINGHOUSE ELECTRIC CORPORATION

			Zip Code	Telephone No.
SEMICONDUCTOR DIVISION Youngwood, Pennsylvania			15697	412-925-7272
CALIFORNIA	Los Angeles	Westinghouse Electric Corporation 600 St. Paul Avenue	90017	213-482-9660
	Sunnyvale	Westinghouse Electric Corporation Building 73 Hendy Avenue	94088	408-735-2191
FLORIDA	Orlando	Westinghouse Electric Corporation 1040 Woodcock Road Post Office Box 20513	32184	305-841-3421
ILLINOIS	Chicago	Westinghouse Electric Corporation 10 South Riverside Plaza	60606	312-461-7200
MASSACHUSETTS	Boston	Westinghouse Electric Corporation 800 Boyleston Street	02199	617-542-0600
MINNESOTA	Minneapolis	Westinghouse Electric Corporation 3501 S. Highway 100	55416	612-927-6551
NEW YORK	Mineola	Westinghouse Electric Corporation 1501 Franklin Avenue	11501	516-248-9800
OHIO	Cleveland	Westinghouse Electric Corporation 55 Public Square	44113	216-579-2135
	Dayton	Westinghouse Electric Corporation 1306 Farr Drive	45404	513-461-3720

SEMICONDUCTOR MOUNTING HARDWARE AVAILABILITY

Manufacturer's Capability Grid

Company Name & Address	FSCM No.	Free Convection Dissipators	Forced Convection Dissipators	Thermal Connector Dissipator	Sockets	ASSOCIATED HARDWARE
Aavid Engineering Inc. 43 Porter Street Melrose, Massachusetts 02176		X		X		
Accel Industrial Heat Sink Corp. 3040 N. San Gabriel Blvd. So. San Gabriel, California 91777	26701	X				
Admiral Plastics Corp. 3462 San Fernando Road Los Angeles, California 90065						Conversion Pads
Alpha Components Corp. 4087 Glencoe Avenue Venice, California 90291		X		X		
Amaton Electronic Hardware Co., Inc. 81 Rockdale Avenue New Rochelle, New York 10802				X		
AMP Inc. Box 3608 Harrisburg, Pennsylvania 17105						Mounting Hardware Lead Sockets Mounting Tools
Astrodyne Inc. 207 Cambridge Street Burlington, Massachusetts 01083	28023	X	X	X		Mounting Hardware
Atlee Corp. 2 Lowell Avenue Winchester, Massachusetts 01890	99378			X		
Augat Inc. 33 Perry Avenue Attleboro, Massachusetts 02703	91506	X		X	X	Insulator Pads Lead Sockets Mounting Tools
Barnes Corporation 24 N. Lansdowne Avenue Lansdowne, Pennsylvania 19050	99779				X	Mounting Hardware Lead Sockets
The Birtcher Corporation Industrial Division 745 Monterey Pass Road Post Office Box D Monterey Park, California 91754	07387	X		X		
Brush Beryllium Co. Metal and Oxide Division Elmore, Ohio 43416						Insulator Pads

Manufacturers shown in bold print have local offices which are included in Section 19 of this D.A.T.A.BOOK

Detailed Hardware information appears in the SEMICONDUCTOR HARDWARE D.A.T.A.BOOK.

SEMICONDUCTOR MOUNTING HARDWARE AVAILABILITY

Manufacturer's Capability Grid

Company Name & Address	FSCM No.	Free Convection Dissipators	Forced Convection Dissipators	Thermal Connector Dissipator	Sockets	ASSOCIATED HARDWARE
Cambion; Cambridge Thermonic Corp. 445 Concord Avenue Cambridge, Massachusetts 02138					X	Mounting Tools
Chemlac Products Inc. 8 Fellowship Road Cherry Hill, New Jersey 08034					X	
Cinch-Monadnock Div. of United-Carr, Inc. 530 Main Street Fort Lee, New Jersey 07024					X	Insulator Pads
Carl Cordover and Co. 104 Liberty Avenue Mineola, New York 11501		X				
Daburn Electronics & Cable Co. 2360 Hoffman Street Bronx, New York 10458				X		Insulator Pads
Daedalus Co. 1338 S. Atlantic Blvd. Los Angeles, California 90022		X		X		
Data Device Corp. 100 Tec Street Hicksville, New York 11801					X	
Delbert Blinn Co. **P. O. Box 2007** **Pomona, California 91766**	08289	X		X		Hardware Kits Mounting Hardware Insulator and Conversion Pads
Delco Radio Division General Motors Corp. 700 E. Firmin Street Komomo, Indiana 46901	16758	X				Hardware Kits Insulator Pads
Eby, Hugh H., Co. Division of Redm. Corp. 4701 Germantown Avenue Philadelphia, Pennsylvania 19144	72825				X	

Manufacturers shown in bold print have local offices which are included in Section 19 of this D.A.T.A.BOOK

Detailed Hardware information appears in the SEMICONDUCTOR HARDWARE D.A.T.A.BOOK.

SEMICONDUCTOR MOUNTING HARDWARE AVAILABILITY

Manufacturer's Capability Grid

Company Name & Address	FSCM No.	Free Convection Dissipators	Forced Convection Dissipators	Thermal Connector Dissipator	Sockets	ASSOCIATED HARDWARE
Elco Corporation Maryland Rd. & Computer Avenue Willow Grove, Pennsylvania 19090	91662				X	
Electronic Molding Corp. 44 Church Street Pawtucket, Rhode Island 02860	17117				X	
Fabri-Tek Inc. National Connector Division 9210 Science-Center Drive Minneapolis, Minnesota 55428					X	
General Electric Co. Silicone Products Division Waterford, New York 12188						Thermal Joint and Potting Compound
Globe Plastics 1342 So. Signal Drive Pomona, California 91766						Conversion Pads
Grayhill, Inc. 561 Hillgrove Avenue LaGrange, Illinois 60525	81073				X	
IFE Division of Plastic Molding & Engineering Co. 25 Tripps Lane E. Providence, Rhode Island 02914					X	
Industrial Electronic Hardware Corp. 109 Prince Street New York, New York 10012	97913				X	Mounting Hardware
International Electronic Research Corp. 135 W. Magnolia Blvd. Burbank, California 91502	98978	X	X	X		Mounting Hardware
Loranger Manufacturing Corporation Post Office Box 948 Warren, Pennsylvania	11535				X	Mounting Hardware
MacDonald and Co. 213 South Brand Blvd. Glendale, California 91204	13102					Mounting Tools

Manufacturers shown in bold print have local offices which are included in Section 19 of this D.A.T.A.BOOK

Detailed Hardware information appears in the SEMICONDUCTOR HARDWARE D.A.T.A.BOOK.

SEMICONDUCTOR MOUNTING HARDWARE AVAILABILITY

Manufacturer's Capability Grid

Company Name & Address	FSCM No.	Free Convection Dissipators	Forced Convection Dissipators	Thermal Connector Dissipator	Sockets	ASSOCIATED HARDWARE
Mauratron Inc. 13333 N. Central Expwy. Dallas, Texas 75231				X		
Modular Devices Inc. 1265 West 135th Street Gardenia, California 90247		X				
Precision Bipbraze Tor 14715 Arminta Street Van Nuys, California 91402	15957	X	X	X		Custom Precision Molding
Reliance Mica Co., Inc. 341 39th Street Brooklyn, New York 11232	08530					Insulator Pads
Risk, George Industries 672 15th Avenue Columbus, Nebraska 68601	24229	X		X		Insulator Pads Joint Compound
Robinson-Nugent Inc. 802 East 8th Street New Albany, Indiana 47150	06776				X	Conversion Pads Mounting Tools
Robison Electronics Inc. 2134 West Rosecrans Avenue Gardenia, California 90249						Conversion Pads
Ross, The Milton, Co. 511 Second Street Pike South Hampton, Pennsylvania 18966	07047				X	Lead Sockets
Space Products Inc. 6631 Sarnia Avenue Long Beach, California 90805	10012					Conversion Pads
The Staver Company, Inc. 41 No. Saxon Avenue Bay Shore, New York 11706	04232	X		X		Insulator Pads
Stauffer-Walker Silicone Corp. Silicone Division 299 Park Avenue New York, New York 10017						Thermal Joint Compound
Thermalloy Company 8719 Diplomacy Row Dallas, Texas 75247	13103	X	X	X		Insulator Pads

Manufacturers shown in bold print have local offices which are included in Section 19 of this D.A.T.A.BOOK

Detailed Hardware information appears in the SEMICONDUCTOR HARDWARE D.A.T.A.BOOK.

SECTION 17

SEMICONDUCTOR MOUNTING HARDWARE AVAILABILITY

Manufacturer's Capability Grid

Company Name & Address	FSCM No.	Free Convection Dissipators	Forced Convection Dissipators	Thermal Connector Dissipator	Sockets	ASSOCIATED HARDWARE
UID Electronics Corp. 4105 Pembroke Road Hollywood, Florida 33021	22753				X	
U. S. Terminals Inc. 7502 Camargo Road Cincinnati, Ohio 45243					X	
Vector Electronic Co., Inc. Flower and Grandview Glendale, California 91201	82893				X	Mounting Tools
Wakefield Engineering Teal & Audubon Roads Wakefield, Massachusetts 01880	05820	X	X	X		Mounting Hardware Insulator Pads Thermal Adhesives and Joint Compounds Mounting Tools
Waldom Electronics Inc. 4633 West 53rd Street Chicago, Illinois 60632	92219				X	
Waterbury Pressed Metal Co. 407 Brookside Road Waterbury, Connecticut 06720				X		

Manufacturers shown in bold print have local offices which are included in Section 19 of this D.A.T.A.BOOK

Detailed Hardware information appears in the SEMICONDUCTOR HARDWARE D.A.T.A.BOOK.

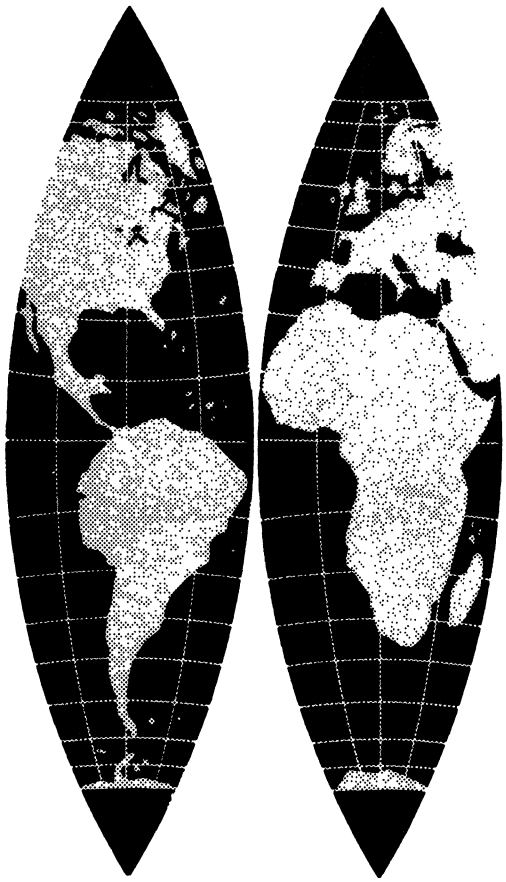

SECTION 18

MOUNTING HARDWARE

Manufacturer's Local Offices

Since mounting hardware is so closely related to the use of solid-state devices, this section of Mounting Hardware Manufacturers Local Offices will provide you with nearby sources of product information.

DELBERT BLINN COMPANY, INC.

	Zip Code	Telephone No.
Post Office Box 2007, 1678 East Mission Boulevard, Pomona, California	91756	714-623-1257

SECTION 19. MANUFACTURERS CODES, NAMES & ADDRESSES

(Manufacturers in order of ***D.A.T.A.*** code letters)

PL FR. ESIG.	FSCM No.	D.A.T.A. MFRS.' CODE	
		AEGG	– AEG-Telefunken, Fachgebiet, Leinstungshalbleiter, 4785 Belecke, Postfach 160, West Germany
		AEIL	**– AEI Semiconductors, Ltd, Carholme Road, Lincoln, England**
	93346 –	**AEL**	**– American Electronic Laboratories, Inc., Richardson Road, Colmar, Pa. 18915**
		AER	– Aertech Industries, 825 Stewart Drive, Sunnyvale, California 94086
		ALP	**– Alpha Industries, Inc., 20 Sylvan Road, Woburn, Massachusetts 01801**
		ALSF	– ALSTHOM, 38 Avenue Kleber, Paris, 16, France
	16952 –	AMD	– American Micro Devices, Inc., Standard Rectifier Division, P.O. Box 5415, 2200 South Fairview St., Santa Ana, Calif. 92704
		APD	**★ American Power Devices, Inc., 7 Andover Street, Andover, Massachusetts 01810**
CDGW–	73445 –	**APX**	**– Amperex Electronic Corporation, Semicon. and Rec. Tube Div., Slatersville, Rhode Island 02876** (Also See PHIN List-Sect 16)
CYS –	07595 –	ASC	– American Semiconductor Corp., 4 North Hickory Avenue, Arlington Heights, Illinois 60004
		ASEA	**★ Allmanna Svenska Elektriska Aktiebolaget Electronics Division, Semicon. Components Dept., ASEAS-172-83, Vasteras, Sweden**
		ATEI	**– ATES Componenti Elettronici S.p.A., Via Tempesta 2, 20149, Milano, Italy**
	23550 –	**BBCG**	**– Brown, Boveri & Cie, Aktiengesellschaft, 6840 Lampertheim, Postfach 200, Germany**
		BELI	– Bharat Electronics Ltd., Jalahalli PO, Bangalore, 13, South India
	27622 –	**BNT**	**– Burns & Towne, Inc., 550 Old Country Road, Hicksville, New York 11801**
CHF –	73501 –	BRA	– Bradley Semiconductor Corporation, 275 Welton Street, New Haven, Connecticut 06506
	83594 –	BUR	– Burroughs Corporation, Electronics Components Div., P.O. Box 1226, Plainfield, New Jersey 07061
	12549 –	CDLF	– Mazda Belvu (Cifte), 50, rue J. P. Timbaud, 92 Courbevoie, France
		CDWF	– Compagnie des Dispositifs, Semiconducteurs Westinghouse, 32, Avenue Marc-Sangnier, 92 Villeneuve-La-Garenne, France
		CITF	**– COGIE Semiconducteurs, 3 et 5, Bd Anatole France, 93 Aubervilliers, France**
		CLA	– Clairex Electronics, Inc., 560 South 3rd Avenue, Mt. Vernon, New York 10550
		CNS	**– Continental Semi-Conductor, Inc., Continental Semi-Conductor Electronic Sales Corp., 59 Central Ave., East Farmingdale, N. Y. 11735**
CUR –	16352 –	CODI	– CODI Semiconductor Division of Computer Diode Corp., Pollitt Drive South, Fair Lawn, New Jersey 07410
		CRL	**– Centralab Semiconductor, Globe-Union, Inc., 4501 North Arden Drive, El Monte, California 91734**
CZX –	12498 –	CRY	– Cyrstalonics Division, Teledyne, Inc., 147 Sherman Street, Cambridge, Massachusetts 02140
GM –	16759 –	**DEL**	**– Delco Electronics Division, General Motors Corp., 700 E. Firmin Street, Kokomo, Indiana 46901**
		DETM	– Delsa-Toshiba, S.A. Calzada-Aurora No. 303, Auautitlan, Mexico
CZL –	12954–	DIC	– Dickson Electronics Corp., 8700 East Thomas Road, Scottsdale, Arizona 85252
	12060 –	DII	– Diodes, Inc., 20235 Nordhoff Street, Chatsworth, California 91311
	19373 –	EAS	– Eastron Corporation, 25 Locust Street, Haverhill, Massachusetts 01830
		EBRG	**– Nortron Hermann Koehler Elektrik GmbH & Co., Oedenberger Strasse 55/65, Postfach 7, 8500 Neurnberg 30, Germany**
		ECC	**– ECC Corporation, 1010 Pamela Drive, Euless, Texas 76039**
BUF –	83701 –	EDI	– Electronic Devices, Inc., 21 Gray Oaks Ave., Yonkers, N. Y. 10710
	06288 –	**EDL**	**– Edal Industries, Inc., 4 Short Beach Road, East Haven, Conn. 06512**
	92678 –	EGG	– EG & G Inc., 170 Brookline Avenue, Boston, Massachusetts 02215
		ELBR	– Elnabra S. A., Electronica Nacional Brasileira, Rua Thiers 525-533, Sao Paulo, Brasil
		EMLS	**– Emihus Microcomponents Ltd., Queensway Industrial Estate, Glenrothes, Fife, Scotland**
	72982 –	ERI	– Electron Research Inc., 530 West 12th Street, Erie, Pennsylvania 16512
		ESMF	**– Societe Europeenne des Semiconducteurs et de Microlectronique, 101 Blvd., Murat, 75 Paris 16e, France**
KE –	20950 –	ESP	– Espey Mfg. and Electronics Corp., Saratoga Semiconductor Div., Congress & Ballston Avenues, Saratoga Springs, New York 12866
	12045 –	**ETC**	**– Electronic Transistor Corporation, 153-13 Northern Boulevard, Flushing, New York 11354**
	26611 –	FCAJ	– Fujitsu Limited, 1015 Kamikodanaka, Kawasaki, Japan
		FERB	**– Ferranti Ltd., Gem Mill, Chadderton, Oldham, Lancs., England**
FJ –	13715 –	**FSC**	**– Fairchild Semiconductor, 464 Ellis Street, Mountain View, California 94040**
	10543 –	GELC	– Canadian General Electric Co., Ltd., 189 Dufferin Street, Toronto 3, Ontario, Canada
G –	03508 –	GESY	– General Electric Company, Semiconductor Products Dept., Northern Concourse Bldg., North Syracuse, New York 13212
		GHZ	– GHZ Devices, Inc., Kennedy Drive, North Chelmsford, Massachusetts 01863
CAKK–	14936 –	**GIC**	**– General Instruments Corp., 600 West John Street, Hicksville, New York 11802**
	08466 –	GICC	– General Instrument of Canada, Ltd., 61 Industry Street, Toronto 337, Ontario, Canada
		GICI	– General Instrument Europe, S.p.A., Box 439, Naples, Italy
CDCG –	24444 –	**GSE**	**– General Semiconductor Industries, Inc., 230 West 5th Street, P.O. Box 3077, Tempe, Arizona 85281**
		HAFO	– Hafo, Siktgatan 8-10, Vallingby, Sweden

★ New Manufacturers

Manufacturers shown in bold print have local offices which are included in Section 16 of this D.A.T.A.BOOK.

SECTION 19. MANUFACTURERS CODES, NAMES & ADDRESSES

(Manufacturers in order of *D.A.T.A.* code letters)

QPL MFR. DESIG.	FSCM No.	D.A.T.A. MFRS.' CODE	
		HIN	– Hind Rectifier, Ltd., Lake Road,Bhandup, Bombay 78, India
	97117 –	HITJ	– Hitachi, Limited, No. 8, 2-chome, Ohtemachi, Chiyoda-ku, Tokyo, Japan
	28480 –	HPA	– HP Associates, 620 Page Mill Road, Palo Alto, California 94304
		HSC	– Helios Semiconductor Company, York Industrial Park, Building "Q", P.O. Box 293, Stanton, California 90680
	16068 –	**IDC**	– **International Diode Corp., 90 Forrest St., Jersey City, New Jersey 07304**
		INRB	– International Rectifier Co., Ltd., Hurst Green, Oxted, Surrey, England
CCBS –	81483 –	**INRC**	– **International Rectifier Corporation, 233 Kansas Street, El Segunda, California 90245**
		INRI	– International Rectifier Corp., Italiana-S.p.A., Via Privata Liguria 19, 10071 Borgaro Torinese, Italy
		INRJ	– International Rectifier Corp., Japan Ltd., 24, 1-chome, Kanda, Suda-Cho, Chiyoda-ku, Tokyo, Japan
		INTG	– Intermetall, Halbleiterwerk Der, Deutsche ITT-Ind, GmbH, 78 Freiburg, Hans-Bunte-Str. 19, Germany
		ISO	– Isofilm International, 20131 Bahama Street, Chatsworth, California 91311
CIT –	14433 –	**ITT**	– **ITT Semiconductors, Electronics Way, West Palm Beach, Florida 33407**
		ITTB	– ITT Semiconductors, A Division of ITT Industries Limited, Footscray, Sidcup, Kent, England
		ITTE	– ITT Manufacturing Services Division, A Division of ITT Industries Limited, Edinburgh Way, Harlow, Essex, England
CBQV –	92703 –	KEM	– Kemtron Electron Products, 14 Prince Place, Newburyport, Mass. 01950
		KEV	★ **KEV Electronics Corporation, Wilmington Industrial Park, 260 Fordham Road, Wilmington, Mass. 01887**
	20754 –	**KMC**	– **KMC Semiconductor Corp., Parker Road, R.D. 2, Long Valley, New Jersey 07853**
CDBS –		**KSC**	– **KSC Semiconductor Corporation, Sub. of Silicon Transistor Corp., KSC Way (Katrina Rd.), Chelmsford, Mass. 01824**
	18822 –	LTTF	– Lignes Telegraphiques & Telephoniques, 89 Rue de la Faisanderie, Paris, 16, France
		LUCB	– **Joseph Lucas Electrical Ltd., Mere Green Rd., Sutton Coldfield, Warwickshire, England**
		MAHA	– **McKenzie & Holland (Aust.) Pty. Limited, Stephenson Street, Spotswood, Victoria, Australia**
	01619 –	MATJ	– Matsushita Electronics Corp., Saiwaicho 1-1 Takatsuki, Osaka, Japan
		MCPE	– M.C.P.Electronics Ltd., Alperton, Wembley, Middlesex, England
		MDC	★ **Microwave Diode Corporation, 119 Main Street, Colebrook, New Hampshire 03576**
CBYI –	96341 –	**MIC**	– **Microwave Associates, Burlington, Mass. 01338**
		MINA	– Miniwatt Electronics Div., Philips Electrical Pty., Ltd., 20 Herbert Street, Artarmon, N.S.W. 2064, Australia
		MISI	– MISTRAL, Via Carnevali 113, Milano, Italy
		MITJ	– Mitsubishi Electric Corp., Kita-itami Works, 4-1 Mizuhara, Itami, Hyogo, Japan
CGG –	04713 –	MOTA	– Motorola Semiconductor Products, 5005 East McDowell Road, Phoenix, Arizona 85008
CCYL –	14552 –	MSC	– Microsemiconductor Corporation, 11250 Playa Court, Culver City, California 90230
		MSDB	– Microwave Associates Ltd., Craddock Road, Luton, Beds., England
	14830 –	MSE	– Microstate Electronics, Sub. of Raytheon Company, 130 2nd Avenue, Waltham,Massachusetts 02154
	18518 –	MSI	– MSI Electronics, Inc., 34-32 57th Street, Woodside, New York 11377
CCWV –		**MULB**	– **Mullard Limited, Mullard House, Torrington Pl., London W.C.1, England** (Also See PHIN List - Sect. 16)
	83781 –	NAT	– National Electronics, Inc., Geneva, Illinois 60134
	12859 –	NECJ	– Nippon Electric Co., Ltd., 1753 Shimounumabe, Kawasaki City, Japan
		NJRC	– New Japan Radio Company, Ltd., 5th Mori Building, 25 Nishikubo-Sakuragawa-Cho, Minato-ku, Tokyo, Japan
		NONE	– Not Currently Manufactured at This Time.
	08257 –	NPC	– Nucleonic Products Company, Inc., 6660 Variel Street, Canoga Park, California 91303
		ORIJ	– Origin Electric Co., Ltd., 1-18-1 Takada Toshimaku, Tokyo, Japan
	35784 –	**PHIC**	– **Phillips Electron Devices, 116 Vanderhoof Avenue, Toronto 17, Ontario, Canada**
CBRZ –	87216 –	PHIL	– Philco-Ford Corporation, Sierra Electronics Operation, 3885 Bohannon Drive, Menlo Park, Calif. 94025
CDGW –	08967 –	**PHIN**	– **N. V. Phillips Gloeilampenfabrieken, Eindhoven, Netherlands** (Also See PHIN List - Sect. 16)
	21455 –	PII	– Parametric Industries, Inc., 742 Main Street, Winchester, Massachusetts 01890
		PIR	– Pirgo Electronics, Inc., 130 Central Avenue, Farmingdale, New York 11735
		PPC	★ **PPC-Power Physics Corporation, Industrial Way West, P.O. Box 626, Eatontown, New Jersey 07724**
	18041 –	PWC	– Power Components, Inc., P.O. Box 421, Scottdale, Pa. 15683
		QUA	– Quality Products Laboratories, 1359 East Edinger Avenue, Santa Ana, California 92705
	12556 –	**RADF**	– **La Radiotechnique, Div. Tubes Electroniques, 130 Ave. Ledru Rollin, Paris XIe, France** (See PHIN List - Sect. 16)
CRP –		RAYN	– Raytheon Semiconductor Division, 350 Ellis Street, Mountain View, Calif. 94040
CRC –	02735 –	RCA	– RCA Corporation, Electronic Components, 415 South 5th Street, Harrison, New Jersey 07029
		ROSG	– Dr. Ing Rudolph Rost, Ubbenstrasse 13, Hannover 1, Germany

★ New Manufacturers

Manufacturers shown in bold print have local offices which are included in Section 16 of this D.A.T.A.BOOK.

SECTION 19. MANUFACTURERS CODES, NAMES & ADDRESSES

(Manufacturers in order of *D.A.T.A.* code letters)

QPL MFR. DESIG.	FSCM No.	D.A.T.A. MFRS.' CODE	
		SAKJ	– Sanken Electric Co., Ltd., International Division, 1-22-8 Nishi-Ikebukuro, Toshima-ku, Tokyo, Japan
	84970 –	**SAR**	**– Sarkes Tarzian, Inc., Semiconductor Division, 415 North College Ave., Bloomington, Ind. 47401**
		SCA	**– Semiconductor Corporation of America, 940 South Ajax Avenue, City of Industry, California 91744**
	81071 –	SCH	– Schauer Manufacturing Corp., 4500 Alpine Street, Cincinnati, Ohio 45242
	11961 –	**SCN**	**– Semicon, Incorporated, 10 North Ave., Northwest Industrial Park, Burlington, Mass. 01803**
		SCO	**– Scientific Components, Inc., 350 Hurst Street, Linden, New Jersey 07036**
	12102 –	SDI	– Semiconductor Components, Inc., 1353 East Edinger Street, Santa Ana, Calif. 92705
		SEKG	**– SEMIKRON, 40 Wiesental Str., Nurnberg 85, Germany**
CQN –	21873 –	**SEN**	**– Sensitron Semiconductor, Division of R. S. M. Electron Power, Inc., 221 W. Industry Ct., Deer Pk., New York 11729**
		SES	**– Semitronics Corporation, 265 Canal Street, New York, New York 10013**
CDVB –	14099 –	**SET**	**– Semtech Corp., 652 Mitchell Road, Newbury Park, Calif. 91320**
		SGSI	– Societa Generale Semiconduttori Spa SGS, Via C. Olivetti 1, Agrate, Milano, Italy
		SHEJ	– Shindengen Electric Mfg. Co., Ltd., Shim-Ohtemachi Building 4, 2-chome Ohtemachi, Chiyoda-ku, Tokyo, Japan
	92346 –	**SHWG**	**– Siemens Aktiengesellschaft, UBB HB VLH, 8000 Munchen 80, Balanstrasse 73, Germany**
CDBN –		SIX	– Siliconix Incorporated, 2201 Laurelwood Road, Santa Clara, California 95054
		SLCB	– Semitron Limited, Cricklade, Wiltshire, England
CDCD –	13327 –	**SOD**	**– Solitron Devices, Inc., 250 Oak Tree Road, Tappan, New York 10983**
	16402 –	SOIF	– Societe Industrial de Liasons Electriques, 122 Rue Nollet, Paris XVII, France
	21307 –	SOL	– Solar Systems, Inc., 8124 North Central Park, Skokie, Illinois 60076
	18175 –	**SONY**	**– Sony Corporation, Atsugi Plant, 14-1, Asahi-Cho 4, Atsugi-shi, Kanagawa-ken, 243, Japan**
CSF –		SPR	– Sprague Electric Company, Marshall Street, North Adams, Massachusetts 01247
		SRPJ	**– Sharp Corporation, Industrial Instruments Div., Semiconductor Components Dept., Yamato Koriyama, Nara, Japan**
		SSI	**– Solid State Devices, Inc., 12741 Los Nietos Road, Santa Fe Springs, California 90670**
		SST	**★ Solid State Industries, 102 Hobart Street, Hackensack, New Jersey 07601**
	58849 –	**SYN**	**– Syntron, Division of FMC Corporation, 1249 Lexington Avenue, Homer City, Pa. 15748**
		TAGS	**– Transistor AG, Member of Raytheon Group, Hohlstrasse 610, 8048 Zurich, Switzerland**
CCAB –	03877 –	TEC	– Transitron Electronic Corporation, 168 Albion Street, Wakefield, Massachusetts 01880
		TEK	– Trans-Tek Manufacturing Company, 4405 South Clinton Avenue, South Plainfield, New Jersey 07080
		TFKG	**– AEG-Telefunken, Fachbereich Halbleiter, Postfach 940, 7100 Heilbronn, West Germany**
CGO –	01295 –	**TII**	**– Texas Instruments, Inc., Semiconductor-Components Div., P.O. Box 5012, Dallas, Texas 75222**
	28890 –	TIIB	– Texas Instruments, Ltd., Manton Lane, Bedford, England
		TIID	★ Texas Instruments, Deutschland GmbH, 8050 Freising, Haggertystrasse 1, Germany
		TIIF	– Texas Instruments France S.A., 06 Villeneuve-Loubet, A.M., France
CIR –	06439 –	**TNC**	**– TRW, Inc., Solid State Operation, 71 Linden Street, West Lynn, Massachusetts 01905**
	18667 –	TOSJ	– Tokyo Shibura Electric Co., Ltd., 1, Kamukai-Toshiba-Cho, Kawasaki-Shi, Kanagawa-Ken, Japan
	00638 –	TRI	– Trio Laboratories, Inc., 80 Dupont Street, Plainview, Long Island, New York 11803
CCNL –	01281 –	TRW	– TRW Semiconductors, Inc., 14520 Aviation Blvd., Lawndale, California 90260
	94154 –	**TUNL**	**– Wagner Electric Corporation, Tung-Sol Division, 630 West Mt. Pleasant Ave., Livingston, N.J. 07039**
		TSAJ	– Tokyo Sanyo Electric Co., Ltd., Oizumimachi, Oragun, Gumma, Japan
CDAQ –	07910 –	**TSC**	**– Teledyne Semiconductor Corp., 12515 Chadron Ave., Hawthorne, Calif. 90250**
CDAS –	12969 –	**UNI**	**– Unitrode Corporation, 580 Pleasant Street, Watertown, Massachusetts 02172**
		UPI	**– United Page, Inc., 481 Getty Avenue, Paterson, New Jersey 07503**
CDCC –	06751 –	**USS**	**– Components, Inc., Smith Street, Biddeford, Maine 04005**
		VAC	– Vactec, Inc., 2423 Northline Industrial Blvd., Maryland Heights, Missouri 63043
	17895 –	**VALG**	**– VALVO GmbH, 19 Burchard Street, Hamburg 1, Germany** (See PHIN List - Sect. 16)
	99313 –	VARM	– Varian/Solid State Division, Salem Road, Beverly, Massachusetts 01915
	83003 –	**VARO**	**– Varo, Inc., Special Products Division, 1000 North Shiloh Road, Garland, Texas 75040**
	83186 –	VEC	– Victory Engineering Corporation, Victory Road, Springfield, New Jersey 07081
		WAB	**– Walbern Devices, Inc., 1818 E. Elizabeth Ave., Linden, New Jersey 07036**
	10948 –	WESB	– Westinghouse Brake & Signal Co., Ltd., 82 York Way, Kings Cross, London N.1, England
		WESI	– Compagnia Italiana Westinghouse, Freni E. Segnali, Corso Francia 138, Regina Margherita, Torino, Italy
CAY –	05277 –	**WESY**	**– Westinghouse Electric Corporation, Semiconductor Division, Youngwood, Pa. 15697**
CCVU –	12711 –	WSI	– Western Semiconductors, Inc., 2200 South Fairview Street, Santa Ana, California 92704

★ New Manufacturers

Manufacturers shown in bold print have local offices which are included in Section 16 of this D.A.T.A.BOOK.

NOTES

We feel you may have some useful comments which deserve consideration for future editions. Please complete and return to us the **User Feedback Card.**

SYMBOLS & CODES

ALL VALUES ARE TYPICAL AND @ 25°C UNLESS OTHERWISE INDICATED BY COLUMN HEADINGS OR SYMBOLS.

SYMBOLS & CODES COMMON TO MORE THAN ONE SECTION

UNDER DESCRIPTION

UNDER MATERIAL (and Process)

- GA — Gallium Arsenide
- Ge — Germanium
- GS — Gallium Antimonide
- Se — Selenium
- SG — Germanium Silicon
- Si — Silicon
- ∗ — Alloyed
- △ — Diffused
- ∅ — Gold Bonded
- † — Indium Bonded
- ☑ — Point Contact
- # — Planar
- § — Mesa
- $ — Epitaxial
- % — Metal-Silicon
- ♦ — Schottky Barrier

FOLLOWING LINE NO.

- ▼ — New Type
- ♦ — Revised Specifications
- # — Non-JEDEC type manufactured outside U.S.A.

FOLLOWING TYPE NO.

△ ☑ # % — Each symbol (assigned by D.A.T.A.) indicates an individual manufacturer of a type number when two or three manufacturers inadvertently assigned the same non-JEDEC type number to non-identical types.

– RT —Replacement type, consult Mfr.

2. SILICON REFERENCE DIODES

3 TYPE No.	TOLERANCE 20 10 5 2 ± (%)	1 NOM. REF. VOLT. (V)	2 MAX. DISS. @ 25°C (W)	TEST CUR. Izt (A)	MAX. DYN. IMP. (Ω)	TEMP. COEFF Tc	MAX. TEMP (°C)	DWG. No.
1	2	3	4	5	6	7	8	9

1

- § — Available to MIL Spec.
- ∅ — Double anode
- † — Reference amplifier
- ∗ — Forward voltage reference diode
- $ — Germanium

(Also see above)

2

Where the same type number is available with different tolerances, the following symbols indicate different tolerances:

- ☑ — 1%
- ∅ — 5%
- $ — 15%
- △ — 2%
- § — 10%
- ∗ — 20%
- † — Available in selected voltages and tolerances; consult manufacturers listed

3

Measured at I_{ZT}

4

- ☑ — With infinite heat sink
- § — Above 25°C

5

§ — Above 25°C

6

Measured at I_{ZT}

- ∅ — Typical dyn. imp.
- △ — Measured at $I_T > I_{ZT}$
- ☑ — Measured at $I_T < I_{ZT}$

7

△ — Maximum

T_C — $\frac{\Delta V/\Delta T}{V}$

Note: T_C is expressed in units of $(10^{-4}/^{\circ}C)$

Eg: Column entry is 5.0, therefore $T_C = 5.0(10^{-4}/^{\circ}C) = .05(\%/^{\circ}C)$

8

- A — Ambient
- B — Base or stud
- R — Max. reference temp. for specified temp. coeff.
- S — Storage
- C — Case
- J — Junction

9

- ☑ — Available with reverse polarity; consult manufacturer.
- △ — Mounted in an oven

3. DIODES

4 TYPE No.	1 PIV (V)	MINIMUM FORWARD CURRENT 2 If (A)	3 @Vf (V)	MAXIMUM REVERSE CURRENT at 25°C Ir (A)	at Vr (V)	at SPECIFIED TEST CONDITIONS Ir (A)	at Vr (V)	TEMP (°C)	CAPACITANCE CAP (F)	at TEST VOLTS (V)	ABS. MAX. RATINGS AT 25°C DISS. (W)	AV REC FWD. CUR. (A)	SURGE CUR. PEAK 1 Cy (A)	PULSE WIDTH (s)	MAX. TEMP. (°C)	DESCRIPTION MAT	DWG. No.
	1	2	3	4		5		6	7		8	9	10		11		12

1

- † — PIV equal to max. cont. working voltage, DC blocking voltage, or min. saturation voltage
- ☑ — Breakdown voltage
- $ — Max. cont. working voltage (PIV not specified)

Following symbols indicate a max. cont. working voltage rating lower than the PIV value given in the column:

- △ — WV 90-99% of given PIV
- ∗ — WV 80-89% of given PIV
- § — WV 75-79% of given PIV
- ∅ — WV 70-74% of given PIV
- ♦ — WV less than 70% of given PIV

2

- ☑ — Controlled forward conductance
- $ — Typical

3

△ — Max. forward voltage at I_F

4 5

(Test voltage is the same for both I_R columns)

△ — Cont. D.C.

7

- ∅ — Minimum
- ☑ — Maximum

8 9

§ — Above 25°C

10

Surge Current value is given for one cycle of 60 ~(or 50 ~ for most non-U.S. types) sine wave, unless the pulse value in the Pulse Width Column is also given.

§ — Above 25°C † — Repetitive

△ — Avalanche type; consult manufacturer

6 11

- A — Ambient
- B — Base or stud
- C — Case
- J — Junction
- S — Storage

12

- $ — Two matched units in separate cases
- § — Four matched units in separate cases
- ∅ — Multi-junction device in two-terminal case
- ∗ — Two or more units in a single case (See Outline Drawing for terminal arrangement)
- ☑ — Available with reverse polarity; consult manufacturer

SYMBOLS & CODES CONTINUED

ALL VALUES ARE TYPICAL AND @ 25°C UNLESS OTHERWISE INDICATED BY COLUMN HEADINGS OR SYMBOLS.

SYMBOLS & CODES COMMON TO MORE THAN ONE SECTION

FOLLOWING LINE NO.

- ▼ – New Type
- ♦ – Revised Specifications
- # – Non-JEDEC type manufactured outside U.S.A.

FOLLOWING TYPE NO.

△ ☑ # % } Each symbol (assigned by D.A.T.A.) indicates an individual manufacturer of a type number when two or three manufacturers inadvertently assigned the same non-JEDEC type number to non-identical types.

– RT –Replacement type, consult Mfr.

UNDER DESCRIPTION

UNDER MATERIAL (and Process)

- GA – Gallium Arsenide
- Ge – Germanium
- GS – Gallium Antimonide
- Se – Selenium
- SG – Germanium Silicon
- Si – Silicon
- * – Alloyed
- △ – Diffused
- ∅ – Gold Bonded
- † – Indium Bonded
- ☑ – Point Contact
- # – Planar
- § – Mesa
- $ – Epitaxial
- % – Metal-Silicon
- ♦ – Schottky Barrier

4. SWITCHING DIODES

3 TYPE No.	1 PIV (V)	RECOVERY TIME TEST CONDITIONS 2 Trr (s)	If (A)	Vr (V)	Zr (Ω)	Ir (A)	RL (Ω)	CKT	STORE TIME (s)	MIN. FORWARD CURRENT at 25°C IF (A)	at Vf (V)	MAX. REVERSE CURRENT Ir @25°C & Vr (A)	Ir at T & Vr (A)	TEMP T (°C)	TEST VOLT Vr (V)	CAP at ZERO VOLTS (F)	ABSOLUTE MAX RATING AVG. FWD I (A)	MAX. TEMP (°C)	DESCRIPTION MAT.	DWG. No. 13

1

- † – PIV equal to max. cont. working voltage, DC blocking voltage, or min. saturation voltage
- ☑ – Breakdown voltage
- $ – Max. cont. working voltage (PIV not specified)

Following symbols indicate a max. cont. working voltage rating lower than the PIV value given in the column:

- △ – WV 90-99% of given PIV
- * – WV 80-89% of given PIV
- § – WV 75-79% of given PIV
- ∅ – WV 70-74% of given PIV
- # – WV less than 70% of given PIV

2

- * – Transition (snap recovery) time
- $ – Forward recovery time
- ∅ – Storage time
- # – Stored charge (picocoulombs)
- § – Carrier life time
- † – t_{RR} measured from time I_F crosses the axis to time I_R crosses the axis
- ☑ – Maximum
- △ – Recovery time measured at elevated temperature
- ▼ – Minimum

3

(Symbol indicates data in this column are either I_R or I_{RR} as qualified)

- † – I_R when $I_{RR} = .1\ I_R$
- △ – I_{RR} when $I_R = -I_F$
- ∅ – I_{RR} when I_R not given

(Note: I_{RR} is the reverse recovery current to which t_{RR} is measured.)

- ☑ – I_R when $I_{RR} = .5\ I_R$

4

- ∅ – Mod. IBM "Y"
- △ – MIL STD 750, para. 4031
  - Method A for $t_{RR} \geqslant$ 300nsec
  - Method B for $t_{RR} \leqslant$ 300nsec
- ☑ – Tektronix
- § – EGG
- † – Mod. JEDEC
- * – Lumatron

5

- $ – Typical
- ☑ – Controlled Forward Conductance

6

- ∅ – At elevated temperature
- △ – Max. forward voltage at I_F

7 8

(Test voltage is the same for both I_R Columns)

- ∅ – One cycle average
- △ – Cont. D.C.

9 12

- A – Ambient
- B – Base or stud
- C – Case
- J – Junction
- S – Storage

10

(Use of two symbols indicates a test voltage between the two voltages represented by the symbols)

- ∅ – Minimum
- ☑ – Maximum
- * – At 1V
- △ – At 3V
- § – At 6V
- † – At 9V or higher

11

- § – Above 25°C

13

- $ – Two matched units in separate cases
- § – Four matched units in separate cases
- ∅ – Multi-junction device in two-terminal case
- * – Two or more units in a single case (See Outline Drawing for terminal arrangement)
- ☑ – Available with reverse polarity; consult manufacturer.
- △ – Step Recovery Diode

SYMBOLS & CODES CONTINUED

ALL VALUES ARE TYPICAL AND @ 25°C UNLESS OTHERWISE INDICATED BY COLUMN HEADINGS OR SYMBOLS.

SYMBOLS & CODES COMMON TO MORE THAN ONE SECTION

UNDER DESCRIPTION

UNDER MATERIAL (and Process)

- GA — Gallium Arsenide
- Ge — Germanium
- GS — Gallium Antimonide
- Se — Selenium
- SG — Germanium Silicon
- Si — Silicon
- * — Alloyed
- △ — Diffused
- ∅ — Gold Bonded
- † — Indium Bonded
- ☑ — Point Contact
- # — Planar
- § — Mesa
- $ — Epitaxial
- % — Metal-Silicon
- ♦ — Schottky Barrier

FOLLOWING LINE NO.

- ▼ — New Type
- ♦ — Revised Specifications
- # — Non-JEDEC type manufactured outside U.S.A.

FOLLOWING TYPE NO.

△ ☑ # % — Each symbol (assigned by D.A.T.A.) indicates an individual manufacturer of a type number when two or three manufacturers inadvertently assigned the same non-JEDEC type number to non-identical types.

— RT —Replacement type, consult Mfr.

5. RECTIFIERS

4 TYPE No.	1 PIV (V)	MAX AVG FWD DC CURRENT: 2 Io (A)	3 at TEMP (°C)	MAX RATINGS @ 25°C SURGE CUR.: PEAK 1 Cy (A)	PULSE WIDTH (s)	DISS. (W)	MAX. TEMP (°C)	MAXIMUM FORWARD VOLTAGE DROP: Vf (V)	at If (A)	at TEMP (°C)	MAX. REVERSE CURRENT: Ir @25°C & Vr (A)	Ir at T & Vr (A)	TEMP T (°C)	TEST VOLT Vr (V)	AVALANCHE RATINGS: MAX V BKDN. (V)	MIN SLOPE (A/V)	DESCRIPTION: MAT.	DWG. No.	16
1	2	3	4	5		6	7	8	9	10	11	12	13		14	15			

1

- ∅ —Also listed in Miscellaneous Diodes under Radiation Resistant Devices (9) (Also see above)
- † — Single phase bridge
- $ —Three phase bridge

2

- † — PIV equal to max. cont. working voltage, DC blocking voltage or min. saturation voltage
- ☑ — Breakdown voltage
- $ — Max. cont. working voltage (PIV not specified)
- % — Max. non-repetitive peak transient reverse voltage

Following symbols indicate a max. cont. working voltage rating lower than the PIV value given in the column:

- △ — WV 90-99% of given PIV
- * — WV 80-89% of given PIV
- § — WV 75-79% of given PIV
- ∅ - WV 70-74% of given PIV
- # — WV less than 70% of given PIV

3

(Rating for resistive load unless otherwise indicated)

- ∅ — Capacitance Load

4

(Value given indicates temp. at which derating starts, unless otherwise indicated)

- $ — Temperature at which derating starts is not specified

5

Surge current value is given for one cycle of 60 (or 50 ~ for most non—U.S. types) sine wave, unless a pulse value in Pulse Width Column is also given

§ — Above 25°C † — Repetitive

6

- ∅ — Maximum reverse power dissipation
- ☑ — With infinite heat sink
- % — Per leg of bridge

7

- † — Max. temp. is not the zero current point for derating; consult manufacturer.

A — Ambient J — Junction
B — Base or Stud S — Storage
C — Case

8

- ∅ — One cycle average
- △ — Cont. D.C.
- § — Typical
- † — Pulsed

9

- ☑ — Min. forward current
- † — At I_O

11 12

(Listed under pulsed conditions)
(Test voltage is the same for both I_R Columns)

- ∅ — One cycle average
- ☑ — One cycle average at average I_F
- † — For total bridge
- △ — Cont. D.C.
- § — Consult manufacturer for V_R
- † — For total bridge

14 15

(These columns applicable only for devices with controlled avalanche ratings)

- △ — Typical
- ∅ — Minimum (applies to Max. V. BKDN. only)

4 10 13

A — Ambient J — Junction
B — Base or stud S — Storage
C — Case

16

- $ — Two matched units in separate cases
- § — Four matched units in separate cases
- ∅ — Multi-junction device in two-terminal case
- * — Two or more units in a single case (See Outline Drawing for terminal arrangement)
- △ — Convection cooled
- † — Liquid cooled
- # — Forced air cooled
- ☑ — Available with reverse polarity; consult manufacturer
- ♦ — Ratings measured with infinite heat sink
- % — Available with Heat Sink

SYMBOLS & CODES CONTINUED

ALL VALUES ARE TYPICAL AND @ 25°C UNLESS OTHERWISE INDICATED BY COLUMN HEADINGS OR SYMBOLS.

SYMBOLS & CODES COMMON TO MORE THAN ONE SECTION

FOLLOWING LINE NO.

- ▼ – New Type
- ♦ – Revised Specifications
- # – Non-JEDEC type manufactured outside U.S.A.

FOLLOWING TYPE NO.

△ ⊘ # % } Each symbol (assigned by D.A.T.A.) indicates an individual manufacturer of a type number when two or three manufacturers inadvertently assigned the same non-JEDEC type number to non-identical types.

– RT –Replacement type, consult Mfr.

UNDER DESCRIPTION

UNDER MATERIAL (and Process)

- GA – Gallium Arsenide
- Ge – Germanium
- GS – Gallium Antimonide
- Se – Selenium
- SG – Germanium Silicon
- Si – Silicon
- * – Alloyed
- △ – Diffused
- ∅ – Gold Bonded
- † – Indium Bonded
- ⊘ – Point Contact
- # – Planar
- § – Mesa
- $ – Epitaxial
- % – Metal-Silicon
- ♦ – Schottky Barrier

6 SILICON CONTROLLED RECTIFIERS

4 TYPE No.	1 PRV and VBO (V)	MAX. CONT. CURRENT 2 Idc (A)	3 at TEMP (°C)	MAX. HOLD. CUR Ih @ 25°C (A)	MAX. GATE FIRING SPEC at 25°C Igf (A)	Vgf (V)	MAX SAT I Ir@PRV and Is@VBO (A)	at TEMP (°C)	MAX. FWD. VOLT. DROP at 25°C Vf (V)	@ If (A)	SWITCHING TIME at 25°C Ton (s)	for If (A)	Toff (s)	MIN. dV/dt @ 25°C (V/us)	ABS. MAX. RATINGS 1 Cy PK SURGE I@25°C (A)	MAX TEMP (°C)	MAX GATE POWER (W)	DWG. No. 18
1	2	3	4	5	6	7	8	9	10	11	12		13	14	15	16	17	

1

† – Thyristor for Parallel Operation

2

(PRV = V_{BO})

- # – Available with max. avalanche rating
- ∅ – V_{BO} with R_{GC}
- ⊘ – V_{BO} with V_{GC} = 0, or V_{GC} negative
- † – PRV equal to DC blocking voltage
- △ – DC blocking voltage
- § – Available with min. avalanche rating

3

- ∅ – Modulator use
- △ – RMS Value

For pulsed rating, See Surge Current Column

4

(Value given indicates temp. at which derating starts, unless otherwise indicated)

- $ – Temp. at which derating starts not specified
- A – Ambient
- B – Base or stud
- C – Case
- J – Junction
- S – Storage

5

- § – Above 25°C
- ∅ – Typical
- $ – Below 25°C
- ⊘ Minimum
- △ Latching Current

6 7

- § – Above 25°C
- $ – Below 25°C

8

(I_R = I_S unless otherwise indicated)

- ∅ – One cycle average
- △ – Cont. D.C.
- † – I_R ($I_S \neq I_R$)
- § – I_S (I_R not specified)

9

- A – Ambient
- B – Base or stud
- C – Case
- J – Junction
- S – Storage

10 11

(Symbol in either column applies to both columns)

- ∅ – One cycle average
- △ – Cont. D.C.
- † – Pulsed
- § – Above 25°C
- $ – Below 25°C

12 13

(Symbols in either column applies to both columns)

- § – Above 25°C
- ⊘ – Maximum

14

- △ – Over entire temp. range of device
- * – Surge duration less than one cycle
- ⊘ – Surge duration more than one cycle
- § – Above 25°C
- ∅ – Typical

15

Surge current value is given for one cycle of 60 ~ (or 50 ~ for most non-U.S. types) sine wave, unless otherwise indicated by one of the symbols below:

- △ – Over entire temp. range of device
- * – Surge duration less than one cycle
- ⊘ – Surge duration more than one cycle
- § – Above 25°C
- † – Repetitive

16

- † – Max. temp. is not the zero current point for derating; consult manufacturer.
- A – Ambient
- B – Base or stud
- C – Case
- J – Junction
- S – Storage

17

- ∅ – Peak
- † – Average
- ⊘ – With infinite heat sink

18

- † – Liquid cooled
- # – Forced air cooled
- △ – Convection cooled
- ⊘ – Available with reverse polarity; consult manufacturer
- * – Radiation Resistant Device; consult manufacturer
- % – Available with Heat Sink
- A – Ambient
- B – Base or stud
- C – Case
- J – Junction
- S – Storage

SYMBOLS & CODES CONTINUED

7. MISCELLANEOUS SILICON PNPN DEVICES

5 TYPE No.	1 USE	2 MAX. FWD. BKOVER VBO (V)	3 MAX. REV. PRV (V)	MAX CONT. CURRENT 4 If (A)	at TEMP (°C)	MAX. HOLD CUR Ih @ 25°C (A)	MAX GATE ON-OFF RATINGS @ 25°C TURN-ON Igf (A)	Vgf (V)	TURN-OFF Igo (A)	Vgo (V)	Ic (A)	MAX. SAT. CURRENT Is at VBO (A)	at TEMP (°C)	MAX. FWD. VOLT. DROP (V)	SWITCHING TIME @25°C Ton (s)	Toff (s)	MIN dV/dt V/us	ABS. MAX. RATINGS PK SRG CUR. (A)	MAX TEMP (°C)	DWG. No.
	1	2	3		3	4	5 6	7	8	9	10	11	12	13	14	15	16	17	18	

1
1 — Shockley Diode
2 — Base turn off
3 — Four-terminal switch
4 — Light-activated switch
5 — Symmetrical two-terminal switch
6 — Bi-directional, 3-terminal, PNPN device

2
* — V_{AG}
Δ — DC blocking voltage
⊠ — V_{GF} = 0, or V_{GF} negative
∅ — With R_{GC} in circuit

3
(Value given indicates temp. at which derating starts, unless otherwise indicated)
$ — Temp. at which derating starts not specified
A — Ambient
B — Base or stud
C — Case
J — Junction
S — Storage

4
∅ — Typical
§ — Above 25°C
$ — Below 25°C

5
∅ — Units are foot-candles (Used for light-activated switch)

6
§ — Other than 25°C

10
§ — Other than 25°C

11
∅ — One cycle average
Δ — Cont. D.C.
$ — Value at voltage less than V_{BO}

12
A — Ambient
B — Base or stud
C — Case
J — Junction
S — Storage

13
(Usually given at max. cont. D.C. current)
∅ — At I_H
† — $\sqrt{2}$ X max. rated on state current

14
(Symbols in either column applies to both columns)
⊠ — Maximum
§ — Above 25°C

15
(Symbols in either column applies to both columns)
⊠ — Maximum
§ — Above 25°C

16
⊠ — Typical capacitance given in pf (instead of min. dV/dt in V/usec)

17
FOLLOWING PEAK SURGE CURRENT
Surge current value is given for one cycle of 60 ~ (or 50 ~ for most non-U.S. types) sine wave, unless otherwise indicated by one of the symbols below:
Δ — Over entire temp. range of device
* — Surge duration less than one cycle
§ — Above 25°C
† — Repetitive

8. MICROWAVE MIXER DIODES

2 TYPE No.	BAND	1 TEST FREQ. (Hz)	FREQUENCY RANGE MIN - MAX (Hz)	NOISE MAX RATIO NR times	MAX REC. NF (dB)	TEST COND. FOR- Pin (W)	RL (Ω)	Zm (Ω)	MAX. CONV. LOSS (dB)	MAX. VSWR	IF IMPEDANCE RANGE MIN - MAX (Ω)	ABSOLUTE MAX RATING BURN-OUT (Erg)	MAX. TEMP (°C)	DESCRIPTION MAT.	DWG. No.
					1				2	3	4	5	6		7

1
∅ — I.F. Amplifier

2 3 4
∅ — Typical

5
§ — mW

6
A — Ambient
B — Base or stud
C — Case
J — Junction
S — Storage

7
∅ — Available with reverse polarity (R); Available in matched forward pair (M); Available in matched forward and reverse pair (MR) (Appropriate letter code can be added to type number; e.g., 1N3000B, 1N3000RB; 1N21WE. 1N21WEM. 1N21WEMR)
§ — Reverse polarity cartridge
Δ — Tripolar construction
⊠ — Coaxial cartridge

9. MICROWAVE VIDEO DETECTOR DIODES

2 TYPE No.	BAND	1 TEST FREQ (Hz)	FREQUENCY RANGE MIN - MAX (Hz)	MIN FIG OF MERIT FIGURE of MERIT	at PWR. LVL. (W)	at R (Ω)	MIN OUTPT Vo (V)	at PWR. LVL. -dBm	MIN TANG. SENS. -dBm	VIDEO IMPEDANCE RANGE MIN - MAX (Ω)	at MAX. VOLT. (V)	ABSOLUTE MAX RATING BURN-OUT (W)	MAX. TEMP (°C)	DESCRIPTION MAT.	DWG. No.
										1		2	3		4

1
∅ — Typical

2
∅ — Ergs

3
A — Ambient
B — Base or stud
C — Case
J — Junction
S — Storage

4
∅ — Available with reverse polarity (R); Available in matched forward pair (M); Available in matched forward and reverse pair (MR) (Appropriate letter code can be added to type number e.g., 1N3000B, 1N3000RB; 1N21WE, 1N21WEM, 1N21WEMR)
§ — Reversible polarity cartridge
Δ — Tripolar construction
⊠ — Coaxial cartridge

NOTE: See top of preceding card for Symbols & Codes following Type No., Line No., & Material.

SYMBOLS & CODES CONTINUED

10. VOLTAGE VARIABLE CAPACITORS & VARACTOR DIODES

3 TYPE No.	MINIMUM CUTOFF FREQUENCY (Corresponding to Type Numbers in previous column) (Hz) (Hz) (Hz) (Hz) (Hz) (Hz)	TYP. CAP. 1 CAP. Cj (F)	2 at TEST VOLT (V)	CAPACITANCE RANGE (for V = 0 to PIV) Ø - at TEST VOLT. (pF)	PIV (V)	Q FACTOR MIN. Q	at TEST FREQ (Hz)	MAX. SER. RES. Rs (Ω)	MAX. DISS. @ 25°C (W)	DESCRIPTION MAT.	DWG. No. 8

1 Ø – Typical
Applies to all values even though symbol appears only once.

2 Ø – Minimum ☑ – Maximum
† – Total Cap.
§ – C_T (Total Capacitance) = C_j (Junction) + C_c (Case)
Δ – Available in closer tolerances; consult manufacturer
% – Type number suffixes indicate capacitance tolerances:
No. Suffix – +20% "B" – +5%
"A" – +10% "C" – +2%
"D" – +1%

3 Ø – At test voltage
† – Center value may be specified within indicated range at test voltage
§ – Change in capacitance (end points not specified) over the voltage range 0 to PIV
$ – Capacitance ratio over indicated voltage range

4 † – PIV equal to max. cont. working voltage, DC blocking voltage, or min. saturation voltage
☑ – Breakdown voltage
$ – Max. cont. working voltage (PIV not specified)
% – Available at lower voltages
Following symbols indicate a max. cont. working voltage rating lower than the PIV value given in the column:
Δ – WV 90-99% of given PIV
* – WV 80-89% of given PIV
§ – WV 75-79% of given PIV
Ø – WV 70-74% of given PIV
– WV less than 70% of given PIV

5 Ø – Typical
☑ – To determine Q: divide f_{co} by test frequency f_m where $f_{co} = \frac{1}{2\pi R_s C_j}$

6 ☑ – Typical

7 § – Above 25°C
☑ – With infinite heat sink

8 Δ – Available in matched pairs; consult manufacturer

NOTE: See top of preceding card for Symbols & Codes following Type No., Line No., & Material

11. TUNNEL DIODES

3 TYPE No.	PEAK CUR. 1 Ip (A)	TOLERANCE ± (A)	2 MAX. TOTAL CAP. (F)	MIN Ip/Iv	Vp (V)	Vv (V)	RESISTIVE Vf at Ip (V)	CUTOFF FREQ. (Hz)	SER. IND. Ls (H)	SER RES. Rs (Ω)	NEG. RES. -R (Ω)	NOISE VOLT. (V)	ABSOLUTE MAX. RATINGS FWD. CUR. (A)	DISS. @25°C (W)	THER-RES. °C/mW	MAX. TEMP (°C)	DESCRIPTION MAT.	DWG. No. 11

1 Δ – Typical
Ø – C_j

2 Δ – Maximum

3 Ø – Minimum
Δ – Maximum

4 § – Measured at I_{MAX} (instead of I_p)
Δ – Maximun

5 Ø – Minimum
Δ – Maximum

6 Δ – Minimum
☑ – Maximum

7 Δ – Minimum
☑ – Maximum

8 ☑ – Maximum
§ – Noise constant (Instead of noise voltage)

9 ☑ – With infinite heat sink
§ – Above 25°C

10 A – Ambient
B – Base or stud
C – Case
J – Junction
S – Storage

11 * – Two or more units in a single case (See Outline Drawing for terminal arrangement)

12. MISCELLANEOUS DIODES

2 TYPE No.	1 USE	DESCRIPTION MAT.	DWG. No.	TECHNICAL DATA

1
1 – UHF Mixer
2 – Photodiode (Si & Ge devices)
3 – Photoconductive cell
4 – Solar cell
5 – Backward diode
6 – Varistor
7 – Microwave switch
8 – UHF Detector
9 – Radiation Resistant Devices
10 – Schottky-Barrier Diodes
11 – Current Limiting
12 – Contact Protectors
13 – Voltage Transient Suppressors
14 – Oscillator Diodes
15 – Step Recovery Diodes
16 – Light Emitting Diodes
17 – Photo-Controlled Devices
50 – Miscellaneous

2
IN ADDITION TO THOSE COMMON TO ALL
CdSe – Cadmium Selenide
CE – Cadmium Selenide & Cadmium Sulfide
CS – Cadmium Sulfide
InAs – Indium Arsenide
InSb – Indium Antimonide
PbS – Lead Sulfide
SC – Silicon Carbide
Se – Selenium
ZnS – Zinc Sulfide

3 Δ – Available in matched pairs; consult manufacturer

SEMICONDUCTOR

DIODE & SCR

D.A.T.A.BOOK

D.A.T.A.