ACS8000 Microcomputer Family User's Manual

Version 1.10

Packed with Fresh Ideas

Each ACS8000 system is distributed with a series of manuals . . . each providing detailed information covering a specific area of user interest. Appendix A contains a listing of all of the available manuals.

1. **ACS8000 HARDWARE OPERATING MANUAL** This manual provides detailed information about the unpacking, setup and operation of the ACS8000 systems . . . it is the general reference on the hardware design and operation of the ACS8000. It provides the systems integrator with the information necessary to support additional hardware on the ACS8000.

2. **ALTOS UTILITY SOFTWARE MANUAL** ALTOS supplies a set of program utilities designed to increase the operational efficiency of the ACS8000 user. ALTOS utilities are not available to users of the UCSD-Pascal operating system.

3. **ACS8000 DIAGNOSTIC SYSTEM MANUAL** With each ACS8000 system ALTOS supplies a comprehensive diagnostic system. This system operates under its own operating system and provides a series of software utilities which pinpoints problems in the unlikely event of a hardware failure. The DIAGNOSTIC MANUAL describes the Problem Diagnosis system in "cookbook" format and should be used whenever a hardware problem is suspected.

4. **APPENDIX AND FIGURES**

5. **OPERATING SYSTEMS MANUALS** The ACS8000 system will operate under a variety of operating systems. The most common operating systems are AMEX, CP/M, MP/M, UCSD-Pascal and OASIS. ALTOS supplies the documentation for the operating system selected for the installation. This documentation is the source of detailed information about the functions and operation of each individual operating system.

AMEX is a trademark of ALTOS Computer Systems Inc. CP/M and MP/M are trademarks of Digital Research Inc., UCSD-Pascal is a trademark of Softech Microsystems. OASIS is a trademark of Phase One Inc.

Warning: This equipment generates, uses, and can radiate radio frequency energy and if not installed and used in accordance with the instructions manual, may cause interference to radio communications. As temporarily permitted by regulation it has not been tested for compliance with the limits for Class A computing devices pursuant to Subpart J of Part 15 of FCC Rules, which are designed to provide reasonable protection against such interference. Operation of this equipment in a residential area is likely to cause interference in which case the user at his own expense will be required to take whatever measures may be required to correct the interference.

Table of Contents

1. System Description

A. How To Use This Manual 1-4
B. Introduction To ACS8000 System 1-4
C. ACS8000 File Organization 1-5
1. Logical File Organization 1-5
2. Physical Disk Management
A. Floppy Disk Space Management 1-5
B. Winchester Disk Space Management 1-6
D. Hardware Overview
1. ACS8000 System Components 1-6
2. ACS8000 Memory Configurations 1-7
3. ACS8000 Floppy Disk Configurations 1-7
4. Winchester Hard Disk 1-7
E. Software Overview
1. ALTOS Firmware 1-7
2. ACS8000 Operating Systems 1-7
3. ALTOS Supplied Programs 1-7

2. System Setup, Checkout and Configuration

A. Unpacking The Machine 1-9
B. Component Setup And Interconnection 1-10
1. ACS8000 Computer Setup 1-10
2. Winchester Disk Drive Setup 1-11
3. Initial Terminal Setup 1-13
4. Initial Printer Setup 1-13
C. Power-Up And System Checkout Procedure
1. Initial Power-On Sequence 1-14
2. Operating System Initialization 1-14
3. Generating A Backup Copy Of The Operating System 1-14
4. Winchester Hard Disk Error Map Generation 1-15
D. System Startup 1-15
E. System Shutdown 1-15
F. System Reconfiguration
1. Addition Of User Memory Or Circuits 1-16
2. Adding A Second Winchester Disk 1-17

3. ACS8000 Disk Drives

A. Floppy Disk Systems
1. Diskette Recording Media 1-18
2. Double-Density Operations 1-18
3. Double-Sided Disk Operations 1-19
B. Winchester Disk Drive Configurations 1-19
C. Winchester Disk Initialization 1-21
D. Assigning Alternate Sectors 1-22

4. ALTOS Hardware And User Integration

A. ACS8000 Hardware
1. Serial Port (SIO) 1-24
2. Parallel Port (PIO) 1-24
3. Counter Timer Chip (CTC) 1-25
4. Direct Memory Access (DMA) 1-25
5. Am9511 Arthmetic Processor 1-25
6. Floppy Disk Formatter/Controller 1-25
7. Centronics Printer Interface 1-25

B. I/O Port Assignments 1-26
C. ACS8000 Interface Connector Wiring 1-28
D. Operating System Interface 1-29
E. Hard Disk Interface 1-29
F. Hard Disk Programming 1-30

THE APPENDICES AND FIGURES REFERENCED IN THIS MANUAL ARE CONTAINED IN THE "ALTOS APPENDICES AND FIGURES" MANUAL. THIS IS THE TABLE OF CONTENTS FOR THE MANUAL.

Appendices

A. Manual References 4-3
B. Z-80 Microprocessor OpCode List 4-4
C. ALTOS Interface Connector Wiring 4-6
D. Input/Output Port Assignments 4-7
E. Disk Controller Status 4-10
F. System Startup And Shutdown Checklist 4-12
G. Multi-User System Interrupt Priority 4-13
H. Circuit Chip Location Map 4-14
I. ACS8000 Models And Facilities 4-15
J. Operating Software Systems Requirements 4-16
K. 8200 Circuit Board System Description Block 4-17
L. Hard Disk Bad Sectors 4-19
M. Field Upgrading ACS8000/5 Systems 4-20

Figures

1. Front And Rear Panel—One Floppy Disk F-1A
2. Front And Rear Panel—Two Floppy Disks F-1B
3. Front And Rear Panel—Multi User Systems F-2
4. Disk Insertion F-3
5. General Microcomputer System Diagram F-4
6. ACS8000 Block Diagram F-5
7. Memory Chip Location Diagram F-6
8. Circuit Chip Location—Chassis 8000 ..... F-7A
9. Circuit Chip Location—Chassis 8100 ..... F-7B
10. Circuit Chip Location—Chassis 8200 ..... F-7C
11. Multi-User System Memory Locations F-8
12. Winchester Disk Setup F-9
13. Winchester Disk Connection F-10
14. Winchester Disk Address Pinning F-11

1. System Description

A. HOW TO USE THIS MANUAL

This ACS8000 hardware manual provides the system user with detailed information about the hardware components of the ACS8000 system. This manual details the following subjects:

1. Unpacking the ACS8000 and initial hardware setup.
2. Routine hardware operation.
3. Implementation and operation of Floppy and Hard disk subsystems in the ACS8000 system.
4. Technical information necessary for the addition of user supplied hardware subsystems.

The remainder of this Chapter outlines the ACS8000 hardware system, file organization, and operating systems supported by the ACS8000. It is written in non-technical terms and is recommended as a base for understanding the interaction between the ACS8000 hardware and the user's operating system.

B. INTRODUCTION TO THE ALTOS ACS8000 MICROCOMPUTER SYSTEM

A typical computer system consists of a CPU (Central Processing Unit), input, output and storage devices, and a program called the operating system.

In microcomputer systems the CPU is a single integrated circuit chip, called a microprocessor, which contains thousands of transistors. The ALTOS ACS8000 computer utilizes the Z80* microprocessor chip. The Z80 is an "upward compatible" offspring of the 8080* microprocessor. This means that all of the 8080's functions can be performed by machines equipped with the Z80. Some of the functions which can be performed by Z80 machines, such as the ALTOS computer, cannot be performed by machines using the less powerful 8080 microprocessor.

The input device is usually a keyboard. Typical output devices include printers, CRTs (cathode-ray tubes), and paper tape reader/punches.

The ACS8000 computer's storage devices include the internal random-access memory, magnetic floppy disks and optional Winchester hard disk drives. The random-access memory is volatile storage... that is, it must have power applied to retain its information. The floppy and Winchester disks, on the other hand, are non-volatile storage because they retain their information regardless of power application.

Figure 4 illustrates the typical microcomputer system. The devices enclosed within the broken lines are contained within the ALTOS computer.The CRT and keyboard, which are usually integrated in a single unit, and the printer, if used, are connected to the computer by cables.

Z80 is a trademark of the Zilog Corp.
8080 is a trademark of the Intel Corp.

The operating system program enables the computer to accept directions from the user and to act accordingly. The operating system program must be loaded into the computer before the computer can function. It accepts and interprets commands from the keyboard, reads from and writes to the floppy and Winchester disks, communicates with the output devices(s), and keeps track of where information is stored on the disks.

C. ACS 8000 FILE ORGANIZATION

An ACS8000 file is a collection of data records which are stored on a disk. From the user's point of view, a file could be considered all of the statements in a program entered from a user's console, or the output of an executed program which is stored on a disk for later reference. This latter type is known as a **"logical file,"** and consists of all of the data which encompasses the disk file.

The operating system assembles the data passed to it by a program or user input and stores it efficiently onto the specified disk drive. Since the disks on the ACS8000 have a finite capacity it is imperative that the operating system efficiently manage the data files. The actual way in which the data is stored on disk is known as the **"physical file."**

The underlying design philosophy of the ALTOS Disk Operating System is to insure that there is no difference to the user in utilizing any disk within the system other than its storage capacity. This is accomplished by having the user deal in program oriented elements such as records and data items, while the operating system maps these user elements efficiently into the physical attributes and capabilities of the individual disk drive.

1. Logical File Organization

The disk files user interfaces to the operating system via 128 byte areas known as logical sectors. Programs are responsible for assembling input into logical sectors which the operating system will then store and retrieve to disk drives on behalf of the user.

If a text type file is being created, the 128 byte logical sector might contain several lines of data. For longer text lines it will require several logical sectors to hold a single text input line of over 128 characters in length. Imbedded in a logical sector containing several lines of input or multiple data items are the special characters, such as carriage return/line feed for text files, which insures that the records can be retrieved exactly as entered.

User programs should be written so that the logical sector is transparent to the user of the program. For example, the program assembles data input by the user into a logical sector which is then passed to the operating system. The logical sector standardizes the program interface to the operating system for disk I/O operations.

2. ACS8000 Physical Disk Management

The operating system is designed to efficiently map user requests for disk input/output to the physical characteristics of the specified disk drive. The major trade-offs in this mapping are (1) the efficient use of available disk capacity, (2) minimizing the number of I/O operations, and (3) minimizing the amount of CPU interaction needed to control disk operations.

The storage capacity of the standard disk drives supported by the operating system ranges from approximately 250,000 characters on a single-density floppy disk, to approximately 25,700,000 characters on a Shugart SA4008 hard disk. The operating system manages the storage allocation differently on these disks, but still bases its storage allocation and management on the 128 byte logical sector.

A. Floppy Disk Space Management

The operating system supports two standard floppy disk configurations: (1) single-density, and (2) ALTOS double-density. These disks are similar in that each disk consists of 77 tracks. The first two tracks on every disk are reserved for system use. They, (Tracks 0 and 1) are always written in single-density mode, and are used to store the operating system. When the system is initially powered-on and the operating system loaded, tracks 0 and 1 will be in single-density regardless of the operating default density of the system. Track 2 contains the directory for the disk and tracks 3 through 77 contain user data or currently unused disk space.

Each track physically consists of 128 byte logical sectors. On a single density disk drive each track contains 26 logical sectors. On a double density disk each track contains 48 logical sectors (except tracks 0 and 1 which are always single density).

A single-density diskette contains 77 tracks, 2002 sectors (77 tracks x 26 sectors/track) for a total capacity of 256,256 bytes (2002 sectors x 128 bytes/sector). A double-density diskette contains 75 double-density tracks and 2 single-density tracks, 3652 sectors ((75 tracks x 48 sectors/tracs) + (2 tracks x 26 sectors/track) for a total capacity of 467,456 bytes (3650 sectors x 128 bytes/sector).

If the operating system were to manage each individual 128 byte logical sector on each floppy disk a tremendous amount of CPU interaction and memory would be required. Instead the operating system manages the allocation of space on floppy disks on a "block" basis. A block is enough physical space on the disk to store several logical sectors. Whenever disk space is required to write a file, the operating system allocates to that file a block which can contain several logical sectors.

On a single-density floppy disk a block consists of 8 contiguous sectors. Thus, the user has a 1,024 byte area (8 sectors x 128 bytes/sector) on the disk which he may utilize for each block allocated to him by the operating system.

On a double-density floppy disk a block consists of 16 contiguous sectors. Thus, the user has a 2,048 byte area (16 sectors x 128 bytes/sector) on the disk which he may utilize for each block allocated to him by the operating system.

When the space within the block is exhausted, another block is allocated for this user. This approach has two major advantages. First, by allocating space in blocks, which do not need to be contiguous on the diskette, the user may write any size file up to the limit of available disk space rather than being limited to the size of available contiguous disk storage. Second, with multiple concurrent users, each is given equal access to the disk resource regardless of the eventual size of his disk file.

The allocation of disk space is based on the diskette directories. Each file on a diskette has one or more directory entries. A part of the directory entry for each file is the order and location of the blocks on the diskette which contain the file's data elements.

B.Winchester Hard Disk Space Management

The ACS8000 supports two Winchester hard disk configurations: (1) the Model 4004 which contains a single recording platter and (2) the Model 4008 which contains two recording platters.

These disks are similar in that each disk consists of 202 cylinders, but the 4008 has eight heads for a total of 1616 tracks while the 4004 has only four heads for a total of 808 tracks. Cylinder 0 head 1 is reserved for use by the operating system. Cylinder 1 through 200 contain user data. Cylinder 201 heads 1 through 4 contain alternate tracks which may be assigned if user tracks become unusable.

There is a further breakdown of tracks into physical and logical sectors. A physical sector is defined as 1024 bytes of data...there are 16 physical sectors per hard disk track. In turn each physical sector is made up of 8 128 byte logical sectors. When a file requires disk space on a Winchester disk it is allocated a block which consists of 128 logical sectors or 16,384 bytes (128 logical sectors x 128 bytes/logical sector). Whenever a file requires additional space it is allocated an additional block.

The directory entry for each file contains the information on which block or blocks have been allocated to each file.

D. HARDWARE OVERVIEW

1. ACS8000 System Components

The term hardware refers to the physical devices provided with an ALTOS ACS8000 microcomputer, and any other pieces of computer equipment such as terminals, printers, and disk storage which the user might add after installation. Hardware does not include the program material provided by ALTOS or other vendors which acts to convert user inputs into actual machine operations such as reading a disk file or writing a line to a user console.

The ALTOS ACS8000 is a family of computers which allows the user to tailor the capacity and function of the computer to fit his applications. Every ACS8000 computer operates with the same speed and executes the same Z80 instruction repertoire. In this way the systems are identical in function.

The user is able to tailor the ACS8000 family of computers in three ways to fit installation requirements. These are:

1. The number of users who may concurrently utilize the sytem varies from one to four.
2. The amount of disk storage capacity and the types and number of disk drives attached to the system.
3. For single user systems, the amount of memory may be either 32K, 48K or 64K characters in size.

The initial tailoring decision is made at the time the machine is ordered from ALTOS. The user specifies the number of users the system must concurrently accommodate, the number and types of disk storage files required, and in the case of single user systems the amount of memory to be included in the system.

In the case of expanding memory, and in some instances the number of concurrent users the system will support, the necessary changes to the ACS8000 hardware may be made by the user in the field...other modifications require new hardware from ALTOS.

Some of the diagnostic procedures used in the field depend upon the machine configuration. In total there are forty different configurations of ACS8000 systems shipped by ALTOS. However, these forty different configurations contain only two major components which affect the user. These are:

A. **ACS8000 CHASSIS** The ACS8000 system contains either one or two floppy disk drives. A different chassis is utilized based on the number of floppy disks integrated into the system.

B. **ACS8000 CIRCUIT BOARD** All of the ACS8000 electronic components are on a single printed circuit board. Depending on the system configuration chosen, one of three circuit boards will be used to implement the system. The attributes of these boards are as follows:

1. **Board 8000** The 8000 board supports a single system user. The memory configuration will vary from 32K to 64K depending upon the user's requirements. Either one or two floppy disk drives are supported in **only** single-density recording mode.
2. **Board 8100** The 8100 board supports a single system user. The memory configuration will vary from 32K to 64K depending upon the user's requirements. Either one or two floppy disk drives are supported in **both** single and double-density recording mode.
3. **Board 8200** The 8200 board supports from one to four concurrent users. The actual number of concurrent users is based upon the amount of memory and I/O drivers installed on board 8200. This board supports two floppy disks in **both** single and double-density recording mode. This board also contains integrated support for the Winchester hard disk.

On the back of the ALTOS computer a silver foil registration sticker will be found which identifies the ACS8000 Model Number. In Appendix I, you will find the cross reference of Chassis and Circuit Board type by ALTOS Model Number.

2. ACS8000 Memory Configuration

The ACS8000 system can be configured with 32K, 48K, 64K, 112K or 208K of random access memory. The amount of memory required is a function of the size of the user's applications and the need for multiple concurrent users.

If only a single user system is required and Winchester hard disk support is not needed, either 32K or 48K system can be configured.

For multi-user systems each user requires a total of 64K bytes of memory. This memory is broken into two components. A 16K byte memory is utilized for the operating system and is accessed by each user. Each user also has a 48K byte memory. Thus a four-user system includes 208K bytes of memory (one 16K system memory and four 48K byte banks of user memory).

3. **ACS8000 Floppy Disk Configurations**

Dependent upon the ACS8000 model, either one or two floppy disk drives are integrated into the system chassis. The specific characteristics of the drive installed by ALTOS is dependent upon the user's requirements. Each floppy disk drive has two characteristics which affect its total storage capacity. These are:

A. **Recording Mode**

There are two recording modes available in ALTOS floppy disks. The single-density mode records approximately 250K characters on a side of the diskette. In double-density mode approximately 500K characters may be recorded on a side of the diskette.

A floppy disk drive operates in either single-density mode only, or in either single or double-density mode. The ability of the disk drive to handle both single and double-density recording modes is a function of the ACS8000 circuitry, not the drive itself.

For those systems with circuitry to support either single or double-density operation, the user controls whether a disk drive is operating in single or double-density mode. Control of the current operating density of the disk drive is accomplished through a user command which sets the operating density on each individual disk drive.

B. **Single Or Double-Sided Recording**

ALTOS offers floppy disk drives which record on either one side of the diskette or on both sides. This is a function of the disk drive hardware.

Depending upon which ACS8000 circuit board is installed, recording can be in either single-density only on each side of the disk, or either single or double on each side of the disk.

In Appendix I you will find a listing of the floppy disk capabilities for each model of the ACS8000.

4. **Winchester Hard Disks**

A Winchester hard disk drive is integrated into several of the ACS8000 systems. The hard disk is available in two sizes: (1) a 14.5 M byte version, and (2) a 29 M byte version. The differences between these disks is in the number of disk surfaces... the access time, transfer rate and other performance criteria are identical.

Support for the Winchester hard disk requires both hardware within the ACS8000 system, and support by the user selected operating system. Appendix I provides a detailed description of ACS8000 support for the Winchester disk for each ACS8000 system type.

E. SOFTWARE OVERVIEW

The term software refers to the programs used with the computer.This includes the programs necessary to perform the most basic machine functions (called "firmware"), the operating system program, the various utility programs provided with the computer by ALTOS, and any programs written by the user or acquired by other means.

1. ALTOS Firmware

Firmware provides the interface between the ACS8000 hardware, operating system, and application programs. For example, when the ACS8000 is first powered-up and the RESET button is pressed to load the operating system, the ALTOS firmware reads the disk, initializes the system, and passes control to the operating system.

Firmware is stored in the Read Only Memory (ROM) of the system. This software is called "Firmware," since it is program material, but not easily alterable. The ROM performs an essential function in that it retains the "Firmware" program even when the power is turned off.

The program in the ROM was written by ALTOS and is called the ALTOS-E Monitor System for those ACS8000 systems built on the 8000 and 8100 non-DMA chassis, and is called PROM200 on the ACS8000 systems configured on the 8200 board and DMA versions of the 8000 and 8100 chassis.

2. **ACS8000 Operating Systems**

There are four major operating systems which are available on the ACS8000 family computers. These operating system are (1) AMEX which was developed by ALTOS, (2) CP/M which was developed by Digital Research Corporation, (3) MP/M which is a multi-user version of CP/M, (4) UCSD Pascal which is a specialty operating system for utilization of the Pascal language, and (5) OASIS which is supplied by Phase One Systems.

Assuming an acceptable hardware configuration, all of these operating systems are serially interchangeable on the same ACS8000 system. Appendix J shows the minimum hardware configuration and aditional supported features for each of these operating systems.

Detailed information about each of these operating systems is available in the appropriate operating manual. These manuals are listed in Appendix A.

3. **ALTOS Supplied Programs**

ALTOS provides a number of programs to enhance the system and allow for analysis of potential hard-

ware problems. **These programs are distributed as part of the ACS8000 system when the CP/M, MP/M or AMEX operating systems are ordered.**

ALTOS software packages provided for systems control functions include commands to change disk drive density for dual density disk drives, and to manage the formatting of diskettes.

ALTOS packages for enhancing system usability include programs for highly efficient transfer of data files from one disk drive to another.

ALTOS diagnostic packages include comprehensive tests of system components including memory, disk drives, consoles and printers. These programs are described in the ALTOS DIAGNOSTIC MANUAL.

2. System Setup, Checkout and Configuration

A. UNPACKING THE MACHINE

Carefully unpack the ALTOS computer. Do not use a sharp or pointed instrument to open the packing box, as this may pierce the protective covering and scratch the finish on the system. Carefully remove the computer from the shipping carton and inspect for external damage. If any damage is noted, please notify ALTOS and file a claim for damages with the shipping carrier. Do not discard the shipping carton or the foam guides, as these should be used to return the machine to ALTOS in the event of a hardware malfunction.

With each ALTOS system you will receive:

1. ALTOS ACS8000 Computer
2. Power Cord
3. ACS8000 Microcomputer Family Users Manual
4. One or more diskettes containing the specified operating system, and ALTOS supplied utilities.
5. Already installed in the computer is the ROM containing the ALTOS-E Monitor System or PROM200.

If your ACS8000 system contains an integrated Winchester hard disk system you will also receive:

1. The Winchester hard disk in a separate packing container.
2. A power cord.
3. A ribbon connector for connecting the Winchester disk to the ACS8000 system.

Assuming that there is no damage, position the computer in such a way that there is clear access to the front and rear panels. Ensure that the ventilation ports on the sides are clear and unobstructed.

B. COMPONENT SETUP AND INTERCONNECTION

The minimum configuration required to utilize the ALTOS computer is the computer itself and a terminal. A terminal consists of a keyboard and display for entry of information and display of system responses.

1. ACS8000 Computer Setup

The ACS8000 is packaged ready for operation. The computer is configured with the voltage specified by the user. Prior to plugging in the ACS8000 the user should insure that the proper voltage is present, and that the power receptacle is properly grounded with a three prong plug. Setup consists of plugging the power cord into the ACS8000 machine and a three prong wall socket. All components of the ACS8000 are thoroughly tested at the ALTOS factory prior to shipment. These tests insure proper operation of memory, integrated floppy disk drives, and console and printer interfaces.

In Figures 1 and 2 are diagrams of each type of ACS8000 chassis showing the position of the connectors to be utilized for the attachment of each system component. These components could include consoles, printers, disk drives and auxilliary devices. Find the figure reflecting your ACS8000 chassis and refer to it while setting up and connecting your system.

2. **Winchester Disk Drive Setup**

WINCHESTER DISK DRIVES REQUIRE USER SETUP PRIOR TO INITIAL POWER BEING APPLIED. FAILURE TO FOLLOW THESE PROCEDURES MAY LEAD TO DISK DRIVE DAMAGE WHICH IS THE RESPONSIBILITY OF THE USER. THE USER SHOULD CHECK IN THE PACKING BOX OF THE WINCHESTER HARD DISK FOR ANY ADDITIONAL SET UP PROCEDURES. THOSE PROCEDURES SUPERCEDE ANY OTHER INSTRUCTIONS.

In order to insure safe shipment Winchester disk drives are sent with a locking screw installed to prevent the disk platters from rotating, and a stepper lock which holds the read/write head in place. Prior to installation, it is necessary to remove the locking screw and stepper lock. As an additional safeguard, ALTOS disconnects two internal power connections within the drive.

The steps to remove the locking screw and stepper lock and to connect disk drive power are as follows:

A. Place the disk drive face up on a flat work surface and remove the wood grained top panel. The top panel is held in place by six screws on each side of the chassis. The top panel will then lift off the chassis.

B. Please refer to Figure 9 for the location of the locking screw and disconnected power plugs. Figure 11 shows the detail of the stepper lock mechanism.

C. The locking screw and its washer should be removed with a screwdriver. Retain this screw as it will be necessary to re-install this lock if it is necessary to ship the drive for maintenance.

D. **The Winchester disk should only be rotated in a clockwise direction as shown in Figure 9.**

NOT ALL WINCHESTER DISK DRIVES CONTAIN THE STEPPER LOCK MECHANISM. AS SHOWN IN FIGURE 11 REMOVE THE STEPPER MOTOR CAP AND SEE IF THE STEPPER LOCK IS INSTALLED. IF THE LOCK IS NOT INSTALLED PROCEED TO STEP G BELOW.

E. Remove the stepper motor plastic cap as shown in Figure 9.

F. Remove the stepper lock as shown in Figure 11. Save the stepper lock as it must be re-installed if the drive is returned to ALTOS. Replace the stepper motor cap.

G. The plastic power interfaces (both AC and DC) should be connected as shown in Figure 9.

H. After replacing the top panel the unit is ready for power on and connection to the ACS8000.

In Figure 10 you will find diagrams of the Winchester drive chassis. Please utilize these diagrams to find the proper connector outlets for the disk drive.

For those installations with two Winchester hard disks, each disk must be attached to the proper connector (PRIMARY and ALTERNATE). The Winchester disk has a physical pin identifying whether the disk is the Primary or Secondary drive, and is initialized at the factory with the proper text identifying the drive. Based on the customer order, ALTOS properly pins, initializes and labels each disk drive. Chapter 4 of this manual contains detailed information on the pinning and initialization of the Winchester hard disk.

The procedure for connecting the Winchester disk drive to the computer is as follows:

A. Attach the power cord to the Winchester disk and to a three prong wall socket.

B. Attach the supplied ribbon connector to the Winchester disk drive connection shown in Figure 10, and to the proper connection on the ACS8000 as shown in Figures 1 and 2.

This completes the initial setup and interconnection of the Winchester disk drive to the system.

If it becomes necessary to ship the Winchester hard disk the locking screw and stepper lock must be replaced to prevent damage to the hard disk platters. The procedure for replacing the components is as follows:

A. Power off the disk unit.

B. Remove the wood grained top panel.

C. Disconnect the DC power plug as shown in Figure 9.

NOT ALL WINCHESTER DISK DRIVES CONTAIN THE STEPPER LOCK MECHANISM. AS SHOWN IN FIGURE 11 REMOVE THE STEPPER MOTOR CAP AND SEE IF THE STEPPER LOCK IS INSTALLED. IF THE LOCK IS NOT INSTALLED PROCEED TO STEP H BELOW.

D. Power on the unit and wait 1½ minutes for the disk to get up to full speed.

E. Remove the stepper motor plastic cap. You will see the mechanism detailed in Figure 11.

F. The triangular damper mechanism should be turned clockwise until resistance is felt. The damper has a free movement of approximately one half revolution, beyond this point resistance will be felt as the damper is moved. This corresponds to the disk read/write head moving from track 0 to track 201. The clockwise movement of the damper moves the heads to track 201.

G. Insert the stepper lock between the screws at two of the points of the triangular damper. Insert the lck until the shoulder on the lock contacts the edge of the damper cover—Part Number 60191. Replace the stepper motor plastic cap.

H. Power off the unit and disconnect the AC plug as shown in Figure 9.

I. Rotate the disk platter clockwise by pushing the top of the motor capstan as shown in Figure 9 until the locking screw holes align.

J. Replace the locking screw and washer.

K. Replace the cover and pack the unit in its original mailing carton.

3. Initial Terminal Setup

A terminal, consisting of a keyboard and display, is required in order to utilize the ACS8000. The display may be either a CRT (TV-type display) or a hard-copy paper printer. Most manufacturers incorporate both the display and keyboard in a single cabinet.

The ALTOS Monitor system is programmed to accept terminals with the following specifications:

Full Duplex: ON	8 Bits Data
Parity : OFF	1 Stop Bit
Baud Rate: 9600 BPS	1 Start Bit

Follow the instructions accompanying the teminal to set these parameters. In addition, you may wish to look at the documentation of application systems such as text editors to find if these programs require additional terminal setup. For example, some terminals allow an upper-case-only mode to be set with a toggle switch.

Consult the terminal operations manual for instructions on connecting the power cord, turning on the unit, adjusting brightness for video terminals, and attaching the ribbon connector to the terminal.

Figures 1 and 2 show the location of terminal connectors to the ACS8000. For mulit-user systems it is important to connect the terminals to the proper connectors.

Chapter 4 Section C contains information of the interface connectors and the data and control lines utilized in connection of serial and parallel I/O devices.

4. Initial Printer Setup

A hard copy printer may be connected to the ACS8000 through an RS232 interface on the ACS8000 chassis. Figures 1 and 2 show the position of this interface on the various ACS8000 chassis.

The CP/M, MP/M and AMEX operating systems are programmed to accept a printer with the following specifications:

8 Bits Data	Parity: OFF
Baud Rate: 300 BPS	1 Stop Bit
1 Start bit	

For users of the CP/M, MP/M and AMEX operating systems, the ALTOS SETUP command allows the user to re-set the default printer baud rate. If a higher baud rate is required, then include the SETUP command in the initial operating system initialization sequence prior to utilizing the printer. The SETUP command is documented in the ALTOS UTILITY SOFTWARE manual.

Consult the printer operations manual for instructions on setting the printer parameters, connecting the power cord, turning on the unit and attaching the ribbon connector to the terminal. Figures 1 and 2 show the location of terminal connectors to the ACS8000.

Chapter 4 Section C contains information of the interface connectors and the data and control lines utilized in connection of serial and parallel I/O devices.

C. POWER-UP AND SYSTEM CHECKOUT PROCEDURES

This section provides information on the initial power-up and checkout of the ACS8000 hardware. Several of the operating systems which may be utilized on the ACS8000 require tailoring (e.g., specifying the amount of memory on the system). See the appropriate operating system manual for specific instructions on tailoring the operating system for your specific environment.

1. Initial Power-On Sequence

After properly interconnecting the ACS8000 with terminals, printers, the optional Winchester disk and any other user supplied equipment, turn power on for these units in the following sequence. First power-on the ACS8000 and then the Winchester hard disk (if present). The proper power-off sequence is to first turn off the Winchester disk and then the ACS8000. Figures 1 and 2 show the position of the power-on switch on the ACS8000 and Winchester disk drives.

For non-DMA ACS8000 systems built on the 8000 and 8100 circuit boards, locate the RESET Button on the front of the ACS8000 Chassis as shown in Figures 1 and 2. Press the RESET button and observe the "%" symbols on the display.

On multi-user systems or DMA single-user systems when the system is powered-on, the message "INSERT DISK IN DRIVE 0 FOR AUTOLOAD" will appear.

If these prompts do not appear on the console, go to the "In Case Of Difficulty" section of the ALTOS DIAGNOSITC MANUAL.

Press the drive A release bar on the front of the computer. The location of drive A is shown in Figures 1 and 2. The drive A door will pop open. Insert the disk containing the operating system program in the disk drive. The disk manufacturer's label must be facing down, and the edge seams of the disk facing up. Refer to Figure 3 for the correct method of inserting the disk.

Some disks may have a "write protect" notch, as shown in Figure 3. In order to use these disks for both reading and writing (the usual mode), the write protect notch must be covered with a piece of opaque tape. The diskette manufacturers usually supply these tapes with the diskettes.

Push the disk gently into the disk drive until you hear a very slight click, and the disk does not spring back when released. Close the disk drive door.

The system now is ready for initial loading of the operating system which has been supplied by ALTOS.

2. Operating System Initialization

The operating system distributed with the system is automatically loaded into the ACS8000 when the RESET button is depressed on non multi-user systems. On multi-user systems the operating system is auto loaded simply by the insertion of the disk into the drive.

When the RESET button is depressed with an operating system present in Drive A, the ACS8000 "auto boot's" the system. This means that the operating system is loaded from the diskette in Drive A, the user's memories are initialized and the following message will appear on each user's console:

64K ALTOS DOS VERS X.XX

The memory size in the message depends upon the operating system and should be no larger than the amount of memory in the ACS8000. In the case of the CP/M operating system, the memory size is the size specified by the user in the operating system initialization process. The version number will change as new releases of the CP/M, MP/M and AMEX operating systems are distributed.

Following this message the operating system prompt will appear on each user's console. At this point the operating system is waiting for commands to be entered by the user. If any of these steps did not perform as described, refer to the Difficulties Section of the ALTOS DIAGNOSTICS MANUAL.

The operating system prompts are:

AMEX Operating System ..... AMEX (A):
CP/M Operating System ..... A>
MP/M Operating System ..... 0A>

In order to check the function of the distribution diskette and some basic functions of the system, type the following command to display a list of the files on the distribution diskette:

DIR<cr>

A listing of program files should appear on the display.

3. Generating A Backup Copy Of The Operating System

TO INSURE AGAINST THE LOSS OF THE ALTOS SUPPLIED OPERATING SYSTEM DISKETTE, IT IS WISE TO GENERATE BACKUP COPIES OF THE DISKETTE.

Each diskette is divided into two areas:

Track 0-1 System tracks which contain the operating system.
Track 2-76 User tracks which contain user generated files.

The system tracks contain certain operating system constants such as memory size for non multi-user systems, printer baud rate, and single or double density diskette operating mode.

For the MP/M, AMEX and CP/M (Version 2 and beyond) operating systems, the entire operating system does not fit into the two system tracks. For CP/M a data set named CBIOSxx.COM must be present on the diskette in order for the diskette to be bootable. The xx in the data set is the size of the memory in the ACS8000, and must be either 32, 48 or 64. All three of these files (CBIOS32.COM, CBIOS48.COM and CBIOS64.COM) are present on the distribution diskette. For MP/M a data set called

MP/M. SYS must be present on a diskette in order to be used as a bootable diskette. For AMEX a data set named AMEX.SYS must be present on a diskette in order to be used as a bootable diskette.

The steps necessary to generate a bootable diskette for each operating system are specified in the appropriate operating system manual.

4. **Winchester Hard Disk Error Map Generation**

The hard disk drives shipped by ALTOS are of the highest quality available. However on any hard disk there may be small areas of the disk media that are of a lower quality such that their use might cause an increase in the number of soft and hard errors and degrade overall performance. Shugart (the manufacturer of the hard disk) provides an analog scan map of each disk detailing the areas of questionable

To minimize errors caused by these media spots ALTOS initializes the disk with dummy files written over these spots so they are unavailable to the operating system... the process for this initialization is detailed in Chapter 4. Problems in the field, such as power transients, may at some time force the user to utilize the procedure described in Chapter 4 to reinitialize the disk.

The use of ALTOS' utility, HARDTEST, provides the user with both a method for testing operation of the hard disk during installation and generating a map of the bad sectors initialized at the ALTOS factory. Detailed instructions on utilization of the HARDTEST utility are given in the ALTOS DIAGNOSTIC SYSTEM manual. To accomplish the test the user will execute HARDTEST 11 which will display all disk errors.

The user should write down the track, sector and head information for all errors with Status Code '04.' This Status Code indicates that this sector has been marked unusable during the ALTOS factory initialization of the disk. Appendix L is provided to store bad sector data.

D. SYSTEM STARTUP

After the system is completely checked out and operating correctly, use the following instructions as a guide for routine system startup. The following instructions assume that your system uses a standard CRT display with an integrated or attached keyboard as the system console. If this is not the case, wherever the instructions refer to the system display or console, apply the instructions to the device you are using as your system console.

Once you have become familiar with the system, you may wish to simply consult the startup checklist in Appendix F.

Turn on the power switch on the ACS8000 system, the Winchester disk drive and the terminal. **Power should be applied to the ACS8000 system prior to powering on the Winchester hard disk.** If other devices are attached to the system, then turn on the

WHEN POWERING UP THE SYSTEM, THE WINCHESTER DISK MUST BE POWERED-UP AFTER POWERING-UP THE ACS8000 TO INSURE AGAINST LOSS OF DATA ON THE WINCHESTER DISK.

power switch on the printer or other peripheral device(s).

The power-on sequence for Winchester disk drives requires two minutes. If a user requests that I/O be performed to this disk drive during the power-up sequence, the system will wait until the disk becomes ready. The user should not be concerned about possible disk problems unless no response is received in three minutes.

Ensures that your terminal is set to the send/receive mode. Some terminals are in this mode automatically when power is applied. Others require that you press a send/receive (SR) or keyboard send/receive (KSR) key or switch. Consult the manual for your terminal for instructions on setting the send/receive mode.

Also ensure that your terminal is set for full duplex operation. Most terminals which do not automatically set the send/receive mode do automatically set half duplex mode. If the half duplex mode is set at the same time as the send/receive mode is set, double characters will be displayed on the console.

Press the drive A release bar on the front of the computer. Insert a system disk (a disk containing the operating system program on tracks 0 and 1) in the drive with the manufacturer's label facing down. Refer to Figure 3 for the correct method of inserting the disk.

Press the RESET button to cause the system to "auto boot" or load the operating system. The system will display the message...

64K ALTOS DOS VERS X.XX

...on the system console followed by the operating system prompt on each powered-on terminal. This is the indication that the operating system program has successfully loaded and is controlling the operation. For multi-system configurations if a terminal is not powered on, the startup message and system prompt will remain pending until the console is turned on. At this point you may enter the appropriate operating system commands to perform the processing required.

E. SYSTEM SHUTDOWN

There are two precautions which should be observed when you are finished with the computer and are preparing to turn it off.

1. Power to the computer should never be turned on or off with diskettes in the disk drives. Therefore, before turning off the power switch, press both release bars and remove the disk or disks. Failure to observe this precaution could allow an unpredictable magnetic field to erase or alter a small part of the information on the disk. The potentially disas-

trous results of such an alteration might not be discovered until some time later.

2. The Winchester disk drive should always be powered-off prior to powering-off the ACS8000 system. The ACS8000 is designed for continuous operation ... if the system will not be used for a few minutes, there is no reason to power the system down.

WHEN POWERING DOWN THE SYSTEM, THE WINCHESTER DISK MUST BE POWERED-OFF PRIOR TO POWERING DOWN THE ACS8000 TO INSURE AGAINST LOSS OF DATA ON THE WINCHESTER DISK.

F. ACS8000 SYSTEM RECONFIGURATION

The ACS8000 is a family of computers which allows upgrading several important capabilities in the field. These capabilities include the addition of memory for single user systems with less than 64K, addition of Winchester hard disk for those systems with the hardware to support it, and the addition of memory for multi-users (up to a maximum of four) on 8200 Circuit Boards.

When upgrades are being considered, ALTOS recommends that the user consult his dealer or ALTOS for specific instructions on the addition of components. This section describes two common areas in which the user may independently upgrade his system.

1. ADDITION OF USER MEMORY OR CIRCUITS

Major circuit chips on the ACS 8000 family of systems are located by an alphabetic/numeric grid system. Figures 7A, 7B and 7C are circuit block diagrams for each of the three ACS8000 chassis which detail the grid number of the chips. This Section provides a cross reference by function of the chip and location. Chapter 4 of this manual describes the utilization of each component in detail.

CHIP NUMBER	CHIP FUNCTION	LOCATION BY CHASSIS 8000	8100	8200
Y0	DMA	15AB	15AB	14N
Y1	Floppy Disk Control	17AB	17AB	23S
Y2	PIO/Disk Select	17CD	17CD	19N
Y3	CTC	17EF	17EF	14P
Y4	PIO	18FG	18FG	19R
Y5	PROM	12E	12E	13K
Y6	FPP-9511	17H	17H	18M
Y7	SIO	14G	14G	14R
Y8	Hard Disk Cont.	—	—	18F, 20E, 21D
Y9	PIO	—	—	13E
Y10	SIO	—	—	13C
Y11	SIO	—	—	13D
Y12	CTC	—	—	16C
CPU	Z-80 CPU Chip	14AB	14AB	14M
MEMORY	(Single User)			
	0K-32K	1A-8B	1A-8B	—
	32K-48K	1C-8C	1C-8C	—
	48K-64K	1D-8D	1D-8D	—
MEMORY	(Multi-User)			
	System Memory	—	—	1H-8H
	Bank 0	—	—	1E-8G
	Bank 1	—	—	1K-8M
	Bank 2	—	—	1P-8S
	Bank 3	—	—	1F-8C

If the user has made a decision to add a function or extend the capacity of the system and has obtained the appropriate components he can simply insert these component parts in the proper location on the chassis.

In the case of memory upgrades for non multi-user system (chassis 8000 and 8100) the user must regenerate the operating system to fully utilize this memory. Refer to the manual for the individual operating system for details on this process.

The multi-user system 8200 chassis is designed for field upgrading through the addition of user memory to increase the number of concurrent users. The 8200 chassis can also be field upgraded to either add a Primary or Additional Winchester disk drive.

A System Description Block on the 8200 circuit board describes the memory and hard disk configuration. This hardware block is located at location 12E on the board. It consists of 24 pins on which metal connectors are placed to specify:

1. The number of user memories in the system.
2. The number and types of Winchester disks attached to the system.

When the system is initially powered-on and the ALTOS Monitor loaded from the ROM, the Monitor interrogates the System Description Block to find the system configuration.

The System Description Block is pre-pinned at the factory to specify the proper system configuration. The format of the pins is as follows:

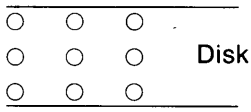
Disk Drive Configuration

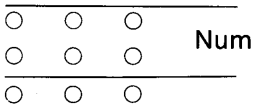
Number Of User Memories

DEFINING NUMBER AND TYPE OF WINCHESTER DISKS

The top nine pins in the system specify the number and types of Winchester disks on the system. The pinning notaton "DRIVE 1" is the Primary drive supplied by ALTOS. "DRIVE 2" is the additional drive which can be attached to the "ADDITIONAL DISK CONNECTOR." The Winchester disk models are the (1) SA4004 which has a capacity of 14.5M bytes, and (2) the SA4008 which has a capacity of 29M bytes of data.

Only the Disk Drive configuration pins of the System Description Block are shown in the following diagrams.

Setting 1

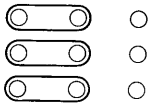
DRIVE 1: No Drive
DRIVE 2: No Drive

Setting 2

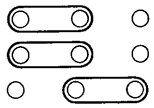

DRIVE 1: SA4004 (14.5M Bytes)
DRIVE 2: No Drive

Setting 3

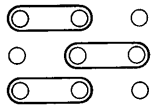

DRIVE 1: SA4008 (29M Bytes)
DRIVE 2: No Drive

Setting 4

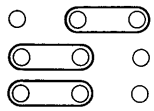

DRIVE 1: SA4004 (14.5M Bytes)
DRIVE 2: SA4004 (14.5M Bytes)

Setting 5

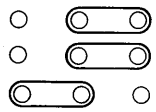

DRIVE 1: SA4008 (29M Bytes)
DRIVE 2: SA4004 (14.5M Bytes)

Setting 6

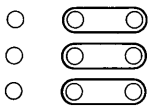

DRIVE 1: SA4008 (29M Bytes)
DRIVE 2: SA4008 (29M Bytes)

DEFINING NUMBER OF USER MEMORIES

The number of banks of user memory is defined in rows 4 and 5 of the System Description block. Only these two rows are shown in the following diagrams.

One Bank Of User Memory (64K Bytes)

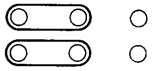

Two Banks Of User Memory (112K Bytes)

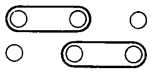

Three Banks Of User Memory (160K Bytes)

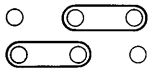

Four Banks Of User Memory (208K Bytes)

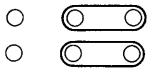

2. **ADDING A SECOND WINCHESTER DISK**

The addition of a second Winchester disk requires three actions on the part of the user. First, as described above, the user must properly pin the System Description Block so that the operating system will recognize that a second disk is present.

Second, the disk itself must be initialized in two respects. As shown in Figure 11, a series of pins are utilized on a circuit board contained within the Winchester disk drive to indicate whether it is the Primary (Drive 1) or Additional (Drive 2) drive (the drives are not interchangeable). Each drive must be pinned to reflect whether it is drive 1 or drive 2. The pinning options are detailed in Figure 11.

The disk drive ID is written to each disk address as part of the initialization process. The drive ID identifies the disk as either Drive 1 or Drive 2.

Based upon the user's order, the ALTOS factory formats and pins the disk drive to reflect either a Primary or Additional function. The user may change this function in the field by repinning the drive. The ALTOS HARDTEST utility on the Diagnostic Diskette allows the user to re-format the disk as either a Primary or Additional drive. See Chapter 3 for details on the formatting process.

Third, if there are any bad media spots on the disk drive the user must mark these bad sectors utilizing the HARDTEST facility on the Diagnostic Disk. The process of identifying and marking bad sectors is described in detail in Chapter 3 of this manual.

3. ACS8000 Disk Drives

A. FLOPPY DISK SYSTEMS

Dependent upon the ACS8000 model, either one or two floppy disk drives are integrated into the system chassis. The specific characteristics of the drive installed by ALTOS is dependent upon the user's requirements. Each floppy disk drive has two characteristics which affect its total storage capacity. These are:

A. **Recording Mode**

There are two recording modes available in ALTOS floppy disks. The single-density mode records approximately 250K characters on a side of the diskette. In double-density mode approximately 500K characters may be recorded on a side of the diskette.

A diskette disk drive operates in either single-density mode only, or in either single or double-density mode. The ability of the disk drive to handle both single and double-density recording modes is a function of the ACS8000 circuitry, not the drive itself.

The user controls whether a disk drive is operating in single or double-density mode. Density change is accomplished through user commands which set the operating density on each individual disk drive.

B. **Single Or Double Sided Recording**

ALTOS offers floppy disk drives which record on either one side of the diskette or on both sides. This is a function of the disk drive hardware.

Depending upon which ACS8000 circuit board is installed, recording can be in either single-density only on each side of the disk, or either single or double on each side of the disk.

In Appendix I you will find a listing of the floppy disk capabilities for each model of the ACS8000.

1. **Diskette Recording Media**

ALTOS recommends that the following DYSAN disks be used with the ACS8000:

Disk Format	Part No.	Write Protect Notch
Single-Density (Single-Sided)	800501	Yes
	800506	No
Single-Density (Double-Sided)	800814	No
Double-Density (Single-Sided)	800504	No
Double-Density (Double-Sided)	800802	No

2. **Double Density Operations**

The ALTOS ACS8000 is available with a double-density disk controller. This controller stores approximately double the amount of data on a single diskette providing the user with additional storage on-line without adding disk drives.

The ALTOS double-density disks are formatted as follows:

Track	Density	Sectors Per Track	Bytes Per Track
Track 0	Single Density	26	3328
Track 1	Single Density	26	3328
Tracks 2-76	Double Density	48	6144

The ALTOS double-density disk system is exclusive to the ACS8000 family of computers. Before starting to use double-density there are several points that need to be understood. The ALTOS distribution diskette is distributed in single-density format for the CP/M and AMEX operating systems and in ALTOS double-density for the MP/M operating system.

The operation of the system utilizing double-density diskettes is totally transparent to the system user. There is no difference in the disk drive hardware for double or single-density operations. The differences lie in the ACS8000 electronics and the diskette media utilized.

For a system capable of both single and double-density operation, the user generates an ACS8000 operating system which expects all diskettes to be either single or double-density as a default. In those instances where a non-default density is required, the ALTOS SINGLE, DOUBLE or MODE commands allow the user to change a specific disk drive to the required density. These commands are described in detail in the ALTOS UTILITY SOFTWARE manual.

To get data into the ALTOS double-density format, copy the single-density diskette to an ALTOS formatted double-density diskette. The ALTOS FLYPFORM program serves to generate a diskette capable of handling double-density storage.

The ALTOS software supports concurrent single and double-density operations. Once the data has been moved to double-density diskettes, the user need not even be aware that double-density is in effect (apart from the extra capacity of the double-density diskettes).

Perform the following steps to copy a single-density diskette, or to copy a file from a single-density diskette to an ALTOS format double-density diskette.

(1) Load the single-density diskette into drive A.

(2) Load a scratch double-density diskette into drive B.

(3) Use the FLYPFORM program if the double-density diskette has not already been formatted to the ALTOS double-density format.

(4) The specific utility used to instruct the operating system of the density of a floppy disk drive depends upon the operating system in use. The DOUBLE and SINGLE commands are provided to set floppy disk density under the CP/M V1.XX operating system. Utilize the ALTOS MODE command under the MP/M, CP/M V2.XX and AMEX operating systems. In this example the user would enter either DOUBLE B: or MODE B: 2 depending upon the operating system. All of these utilities are described in the ALTOS UTILITY SOFTWARE manual.

(5) Use PIP to copy the required data from A: to B:.

(6) If the double-density diskette is also to be a "system" disk, use DCOPY to copy the system tracks from A: to B:.

These steps will cause single-density data and system diskettes to be copied to ALTOS double-density diskettes. If these diskettes are to be utilized as bootable system diskettes, it is necessary to "setup" the disks so that the operating system will know the disk is written in double-density. The ALTOS utility program SETUP (described in the ALTOS UTILITY SOFTWARE manual) describes the process.

NOTE: If the SETUP program is not run on the double-density diskette after a SYSGEN operation from a single-density disk (or after a MOVCPM from memory), you will not be able to load the new operating system from the new diskette. It will assume single-density operation and attempt to read the directory in single-density mode. This will cause an error with status code '10'. The same holds true if in single-density mode you attempt to read a double-density diskette without using the DOUBLE or MODE command. Once in double-density mode, the SINGLE or MODE command is used to read a single-density diskette.

3. Double-Sided Disk Operations

The ACS8000 chassis can be configured with floppy disk drives which write on either one or both sides of the diskette. As noted earlier, the proper diskette media is required for two-sided operations.

The density in which each side can be written is dependent upon the electronics in the ACS8000. Double-density operation is available with two-sided diskette drives if the ACS8000 system is electronically configured to support dual-density operations.

In the AMEX, CP/M and MP/M operating systems double-sided disk drives are supported by considering each side of the diskette as a separate disk drive. The table below shows the logical drive addresses utilized by the operating systems and their physical relationship with the disk.

Logical Address	Physical Drive	Side
A:	Right	Top
B:	Left	Top
C:	Right	Bottom
D:	Left	Bottom

It is possible to configure a disk drive environment utilizing the SINGLE and DOUBLE commands in which the top side of a diskette was written in single-density mode, while the bottom side was in double-density. This practice is discouraged in that it causes substantial operational confusion.

B. WINCHESTER DISK DRIVE CONFIGURATIONS

The way in which Winchester disk drives are managed on an ACS8000 system is dependent upon which operating system is utilized. The Winchester disk is currently supported by ALTOS in operation under the AMEX, CP/M, MP/M, OASIS operating systems.

Under CP/M and MP/M the largest file which can be supported consists of 65,535 records of 128 characters each. Thus the maximum file size is 8 million bytes. Since the Winchester disk is either 13 M or 26 M characters in size it is necessary to artificially break the physical disk into multiple logical disks. As shown in the table below the CP/M and MP/M operating systems break the Winchester disk into logical addresses ranging from E: to K:.

CP/M and MP/M Winchester Disk Management

	PRIMARY DISK		ADDITIONAL DISK	
Logical Address	14.5 M Byte File Size	29 M Byte File Size	14.5 M Byte File Size	29 M Byte File Size
E:	8M	8M	—	—
F:	—	8M	—	—
G:	—	8M	—	—
H:	—	—	8M	8M
I:	—	—	—	8M
J:	—	—	—	8M
K:	4M	—	—	—
L:	—	—	4M	—

The AMEX operating system, however, manages each of the Winchester disks as a single file. The logical AMEX disk address for the Primary integrated disk is E:. The logical address for the Additional disk is F:.

AMEX Winchester Disk Management

	PRIMARY DISK		ADDITIONAL DISK	
Logical Address	14.5 M Byte File Size	29 M Byte File Size	14.5 M Byte File Size	29 M Byte File Size
E:	13M	26M	—	—
F:	—	—	13M	26M

AMEX allows the user to write files of any size up to the actual capacity of the Winchester disk device. This function prevents the loss of high performance disk storage space due to disk management constraints of the operating system.

C. WINCHESTER DISK INITIALIZATION

The Winchester disk is initialized for utilization by the AMEX, MP/M and CP/M operating systems by ALTOS prior to shipment. The initialization process consists of (1) placing a hardware pin identifying whether this disk is to be a Primary or Additional disk on the circuit board within the Winchester hard disk system, and (2) formatting the sector addresses on the disk to indicate whether this is drive 1 (Primary) or drive 2 (Additional).

In the event of a hardware error it may become necessary to reinitialize the disk. An example of such an error would be if a power failure caused the destruction of a directory on the disk. The reinitialization process would also be required if the user were to add a second Winchester disk or determine that a Primary disk were to be utilized as the Additional disk.

In the reformatting instructions below it is assumed that the user is reformatting the disk to move from Primary to Additional capability. If reformatting only is required, skip steps 1 and 2. The HARDTEST utility described below in the initialization process is an ALTOS utility which is distributed with the Diagnostic Control Package. Detailed information as to its use will be found in the ALTOS DIAGNOSTIC PROCEDURES manual.

THE WINCHESTER DISK IS FORMATTED AT THE ALTOS FACTORY AND IS READY FOR IMMEDIATE USE. THE FORMATTING PROCEDURE DESCRIBED BELOW IS ONLY NECESSARY WHEN ADDING A SECOND DISK, MODIFYING A CONFIGURATION OR WHEN A HARDWARE PROBLEM HAS ARISEN. THE FORMATTING PROCEDURE DESCRIBED BELOW WILL ERASE ALL FILES ON THE HARD DISK.

Procedure For Adding A Second Hard Disk Drive to The 8200

1. A jumper within the Winchester hard disk must be pinned to indicate whether the drive is to be used as a Primary or Additional drive. This allows individual selection of the drives. The location and pinning placement of this jumper is detailed in Figure 11 of this manual.

2. Change the pinning of the configuration block on the 8200 chassis computer board to agree with the size and number of the drives (i.e., SA 4004 or 4008 and at which location). This process is detailed in Chapter 4 of this manual. Note that drive 1 must be as large or larger than drive 2. The computer must be reset after changing the pinning, as the configuration block is only read by the system at warm boot.

3. The first step in formatting the hard disk is to initialize the sector addresses with either Drive One (Primary) or Drive Two (Additional). The HARDTEST ALTOS utility provides this function utilizing HARDTEST Test One. Depending upon which physical Connector on the back of the ACS8000 Chassis the drive is plugged into, the sector addresses will be formatted to either the Primary or Additional Drive. The drive number at each address will be changed to correspond to either Drive 1 (connection to the Primary device Connector) or Drive 2 (connection to the Additional device Connector). If a hard disk formatted as a Primary drive is connected to the Additional drive connector and I/O is performed the sector address will not match and a RECORD NOT FOUND error message will be returned.

4. The hard disk can now be accessed by the operating system. The user should test the ability of CP/M, MP/M or AMEX to access all of the logical disk addresses. For example, if the drive has been formatted as an additional drive CP/M and MP/M should allow access to drive addresses H: and L: for 4004 hard disks and drive addresses H:, I: and J: for the large Model 4008. AMEX would allow access to drive address F:.

5. The next step in the initialization process is to assign alternate sectors and dummy files for those areas of the hard disk which are known to have media defects. This process is defined in the next section of this manual. The ALTOS HARDTEST utility is provided for initialization.

6. The last step in the initialization process is to write the entire disk drive with a character which indicates to the operating system that the disk is empty. Without this propogation the operating system would not be able to properly read the disk directory. If HARDTEST 11 has been utilized to assign dummy files this has already been accomplished and the reformatting process is complete. If assignment of dummy files has not been necessary, HARDTEST Function 8 "FULLY WRITE EVERY TRACK ON DISK" is used for this initialization. When HARDTEST queries for the character to be propogated the user responds "E5H" (omitting the " characters). This function will require approximately two minutes to complete.

Upon completion of this initialization process the user is free to utilize the disk.

D. ASSIGNING ALTERNATE SECTORS ON THE HARD DISK

The Shugart hard disks supplied by ALTOS are the highest quality available. However, on any hard disk there may be small areas of the disk media which are not usable. The Winchester hard disks provide alternate sectors which may be assigned by the user to make the areas of bad media transparent to the user.

When the hard disk is shipped from the ALTOS factory the process of initialization, as described above, and the process of assignment of alternate sectors has already taken place. In the event that the disk must be re-initialized or that a sector of the media becomes faulty in the field it is necessary to assign an alternate sector to replace the media in error. If the user simply wishes to mark an additional sector as bad, go directly to step six of the process outlined below.

This assignment procedure is a two step process. First, the Sector ID is flagged using the HARDTEST facility indicating the sector is unusable. Second, a dummy file is assigned to occupy the bad sector so as to minimize the overhead caused by files being allocated on this spot and the resulting overhead in accessing the alternate sector.

The manufacturer of the Winchester hard disk (Shugart) provides ALTOS with error maps on their hard disk drives (SA4004 and SA4008). These error maps give the location of the defective areas on the disks. By using this map to flag bad sectors, the user will be able to identify bad sectors and reduce the number of soft errors. The Shugart error map is based on an analog scan of each disk and picks out marginally bad areas which might otherwise result in soft (recoverable) errors.

The Shugart error maps are defined in terms of the cylinder, head, first byte in error (relative to the index) and length of the defect (bits).

The final step in the assignment procedure is to allocate dummy files onto those tracks which are known to be in error. This prevents the operating system from allocating its own user data files onto faulty spots on the disk.

THE HARD DISK IS SHIPPED FROM ALTOS ALREADY FORMATTED WITH ALL BAD SECTORS MARKED AND DUMMY FILES ALLOCATED. THE DISK DOES NOT REQUIRE FURTHER FORMATTING PRIOR TO INSTALLATION USAGE.

The specific procedure for assigning alternate sectors is described below. In Figure 1 (which follows this description) an actual example of the calculations is given which the user should follow along as the process is described below.

1. A copy of the Shugart Error Map is located in a pouch on the bottom side of the disk drive (note that you must remove the cover from the disk chassis to gain access to this Error Map). The user may determine the actual sector address from the Shugart error map or may utilize the HARDTEST utility function which accepts this location information. If the user does not wish to convert the Shugart notation then proceed to step 6 of this procedure.

2. The "ERR(BITS)" value is the number of bits which were found to be in error during the analog scan. It is first necessasry to convert the number of BITS into the number of BYTES (8 bits constitute a byte). This is done by dividing the ERR(BITS) value by 8. If there is a remainder other than 0 add one to the ERR(BYTES) value. The results of this calculation are shown in Figure 4-1.

3. The LAST BYTE value is then determined by adding the ERR(BYTES) value to the BYTE CT value which represents the first byte in error as measured from the hardware index point.

4. The BYTE CT and LAST BYTE values are then converted to sector addresses through a table lookup procedure. Using the ERROR MAP TABLE below determine if the BYTE CT value falls within any of the ranges specified in the TOTAL BYTE RANGE column. If the BYTE CT does fall within the range then place the SECTOR NUMBER value in the FIRST SECTOR column. If the BYTE CT value does not fall within one of the specified values then place an "X" in the FIRST SECTOR column. Then determine if the LAST BYTE falls within the range and place its SECTOR NUMBER in the LAST SECTOR column, or an "X" if the value is not in any range. A portion of every track on th ehard disk is not used for user data. This space is utilized for head settling and timing synchronization. The "X" indicates that the media in error resides in this unused space and there is no need for allocation a dummy file.

TOTAL BYTE RANGE	SECTOR NUMBER	ADDRESS BYTE RANGE
00000-01060	15	00000-00018
01125-02185	0	01125-01143
02250-03310	1	02250-02268
03375-04435	2	03375-03393
04500-05560	3	04500-04518
05625-06680	4	05625-05643
06750-07810	5	06750-06768
07875-08935	6	07875-07893
09000-10060	7	09000-09018
10125-11185	8	10125-10143
11250-12310	9	11250-11268
12375-13430	10	12375-12393
13500-14560	11	13500-13518
14625-15680	12	14625-14643
15750-16810	13	15750-15768
16875-17935	14	16875-16893

5. The user can now make a table of sectors which are in error and require flagging. This is accomplished as follows:

A. If the FIRST SECTOR and LAST SECTOR values are both "X" then ignore this error condition.

B. If either the FIRST SECTOR or LAST SECTOR contains an "X" then enter the TRK, HD and SECTOR value for the non "X" value into the table.

C. If the FIRST SECTOR and LAST SECTOR contain the same Sector value then enter the TRK, HD and FIRST SECTOR value into the table.

D. If the LAST SECTOR value is more than 1 greater than the FIRST SECTOR value then enter the TRK, HD and SECTOR values ranging from the FIRST SECTOR to the LAST SECTOR (e.g., if FIRST SECTOR equals 4 and LAST SECTOR equals 6 then three entries are made in the table with the same TRK and HD values and SECTOR values of 4,5 and 6).

E. If the TRK, HD and SECTOR values already appear in the table then do not re-enter these values.

6. Utilize the ALTOS HARDTEST utility Function 10 (Early version of Diagnostic Disk 1.01 or earlier) or Function 12 to flag each of the sectors specified in the table. Function 12 will query the user for the TRACK, HEAD and SECTOR numbers, while Function 10 queries for Track, Head, Byte Count and Error Bits. The user should specify a Flag Byte of "011H." Upon completion of this function each sector address will be flagged as unusable.

7. Utilize HARDTEST Function 11 to automatically assign dummy disk files on those disk tracks which have been flagged with error flag 011H. When this function has been completed the disk will be ready for user utilization.

8. Run HARDTEST test 11 for a multiple of eight passes to check that all the bad sectors have been flagged. There should be no hard "CRC errors," but there should be as many sectors with "bad sector" errors as there were sectors flagged. There may be some remaining errors due to flaws in the address or address sync space.

9. Keep the previous calculations along with the serial number of the disk drive for future reference.

SHUGART ERROR MAP SA4000 MEDIA SCAN				USER COMPUTATIONS			
TRK	HD	BYTE CT	ERR(BITS)	ERR BYTES	LAST BYTE	FIRST SECTOR	LAST SECTOR
007	05	13039	23	3	13042	10	10
008	05	13036	19	3	13039	10	10(1)
		13041	12(1)	2	13043	10	10(1)
184	07	05775	45	6	05881	X	X
186	07	08930	560	70	09490	6	7(2)

SECTOR FLAG TABLE

TRACK	HEAD	SECTOR
7	5	10
8	5	10(1)
186	7	6(2)
186	7	7(2)

NOTES:

(1) Errors have occurred on the same track, head and sector of the disk. It is only necessary to assign an alternate sector once.

(2) In this case the bits in error have spilled over onto two sectors. It is necessary to assign an alternate for both of the sectors in error.

4. ALTOS Hardware and User Integration

The process of adding and supporting additional hardware on the ACS8000 system requires an understanding of three major elements. These are (1) the hardware components utilized within the ACS8000 and how they may be accessed by the user, (2) the physical interconnection of user devices, and (3) the interface into the appropriate operating system. This manual section, combined with other manuals describing the internal function of ACS8000 components and operating system capabilities, provides the OEM integrator with the information necessary to add and support non-ALTOS supplied hardware devices.

A. ACS8000 HARDWARE

The ACS8000 is configured with all the necessary hardware to support the floppy disks, Winchester disks and other peripheral devices on the system. The components which affect the user in adding and supporting additional equipment are detailed in this section. Appendix A contains a listing of the technical manuals available describing the function of the components described below.

1. **Serial Port (SIO)***

The Z80-SIO is a dual channel multi-function peripheral component designed to satisfy a wide variety of serial data communications requirements in microcomputer systems. Its basic function is a serial-to-parallel, parallel-to-serial converter/ controller, but within that role it is configurable by systems software so its personality can be optimized for a given serial data communications application.

The Z80-SIO is capable of handling asynchronous and synchronous byte-oriented protocols, such as IBM Bisync, and synchronous bit-oriented protocols, such as HDLC and IBM SDLC. This device can also be used to support virtually any other serial protocol for applications other than data communications as in cassette or floppy disk interfaces.

The Z80-SIO in the ACS8000 is used to drive the console terminal device and the system printer. The printer port maybe used for other serial applications, including a modem interface for remote data communications.

For ACS8000 systems built on the 8000 and 8100 circuit boards there is one Z80-SIO. On multi-user systems built on the 8200 circuit board there are three Z80-SIO's to support the four terminals and two printer ports.

2. **Parallel Port (PIO)***

The Z80-Parallel I/O (PIO) Circuit is a programmable, two port device which provides a TTL compatible interface between peripheral devices and the Z80-CPU. The CPU can configure the Z80-PIO to

interface with a wide range of peripheral devices with no other external logic required. Typical peripheral devices that are fully compatible with the Z80-PIO include most keyboards, paper tape readers and punches, printers, PROM programmers, etc. The Z80-PIO utilizes N-channel silicon gate depletion load technology and is packaged in a 40-pin DIP.

The number of Z-80 PIO's in an ACS8000 is dependent upon which ACS8000 circuit board is utilized. The non multi-user ACS8000 systems (circuit boards 8000 and 8100) contain two Z-80 PIO's (each containing two ports). One PIO is used to control the diskette operations. The other is connected to the external parallel connector and may be used to drive a printer, an EPROM programmer or any other parallel interface device.

The multi-user ACS8000 systems (circuit board 8200) contains three Z-80 PIO's. These are used for diskette interface, Winchester hard disks interface, and connection to the external parallel connector.

3. **Counter Timer Circuit (CTC)***

The Z80 Counter Timer Circuit (CTC) is a programmable component with four independent channels that provide counting and timing functions for microcomputer systems based on the Z80-CPU. The CPU can configure the CTC channels to operate under various modes and conditions as required to interface with a wide range of devices. In most applications, little or no external logic is required. The Z80-CTC utilizes N channel silicon gate depletion load technology and is packaged in a 28 pin DIP.

Each ACS8000 has one CTC with four channels. Channels 0 through 2 are used by the system to control BAUD rates and head load delay times. The fourth channel is available for use and could provide the services of an interval timer or a real time clock.

The mulit-user versions of the ACS8000 (circuit board 8200) utilize a second CTC. This second CTC is used for additional console and printer port timing.

4. **Direct Memory Access (DMA)***

The Z80 Direct Memory Access (DMA) circuit is a programmable single channel device which provides all address, timing and control signals to effect the transfer of blocks of data between two ports within a Z80-CPU based system. These ports may be either system main memory or any system peripheral I/O device. The DMA chip can also search a block of data for a particular byte (bit maskable), with or without a simultaneous transfer.

The DMA circuit is standard equipment on the 8200 chassis of the ACS8000 (with the exception of the 8200/5 models). The DMA circuit is required for support of the Winchester disk drives. All ACS8000 chassis are designed for addition of a DMA chip.

*Copyright ©1978 Zilog. Reproduced with permission of copyright owner.

5. **Am9511 Arithmetic Processor***

The Am9511 Arithmetic Processing Unit (APU) is a monolithic MOS/LSI device that provides high performance fixed and floating point arithmetic and a variety of floating point trigonometric and mathematical operations. It may be used to enhance the computational capability of a wide variety of processor-oriented systems.

All transfers, including operand, result, status and command information, take place over an 8-bit bidirectional data bus. Operands are pushed onto an internal stack and a command is issued to perform operations on the data in the stack. Results are then available to be retrieved from the stack, or additional commands may be entered.

Transfers to and from the APU may be handled by the associated processor using conventional programmed I/O, or may be handled by a direct memory access controller for improved performance. Upon completion of each command, the APU issued an end of execution signal that may be used as an interrupt by the CPU to help coordinate program execution.

This device is required for use of the AMEX operating system.

*Copyright ©1978 Advance Micro Devices, Inc. Reproduced with permission of copyright owner.

6. **Floppy Disk Formatter/Controller**

The Floppy Disk Formatter/Controller is a programmable floppy disk formatter/controller chip contained in a standard 40-pin dual-in-line package. The chip, which is fabricated using N-channel silicon gate technology, interfaces a floppy disk drive directly to a computer interface bus. These circuits provide soft sector formatting, which may be either IBM 3740-compatible or a user-selected sector format.

The 1771-1 chip is utilized for single density floppy disk management (circuit board 8000). The 1791 is utilized for double density floppy disk operations in the 8100 and 8200 circuit board.

*Copyright© 1978 National Semiconductor Corporation. Reproduced with permission of copyright owner.

7. **Centronics Printer Interface**

The following considerations apply to the printer driver and hardware interface for Centronic's parallel printer (700 series).

Hardware considerations

(refer to page 4 of the Schematic Diagram):

(see Appendix C of Appendix and Figures for interface connector wiring)

The parallel port connector is mounted on the rear of the ACS8000 chassis. It is a Cinch DP37P or equivalent with a Cinch DC24660 hood with clamp.

The cable is Alpha flat twisted pair in plastic sheath.

The Centronics connection refers to the pins going into the printer itself. This connector is an Amphenol 57-30360.

All ground returns should be used for noise suppression and cross talk between signals.

Software Considerations:

Utilize the SETUP program to inform the operating system that the printer in use is to use the parallel printer port interface.

B. I/O PORT ASSIGNMENTS

The following is a listing of the I/O Port assignments for the ACS8000 system. The Chip Select Numbers correspond to the references in the ALTOS ROM Monitor and are the Port addresses used in software to read/write to that circuit. The Chip Select Number corresponds to the Circuit Chip location as shown on the Circuit Board schematics at Figures F-7A, F-7B and F-7C.

I/O PORT ASSIGNMENT FOR THE ACS8000 SYSTEM COMPONENTS PRESENT ON THE 8000, 8100 AND 8200 CIRCUIT BOARDS

PORT NUMBER	CHIP SELECT NUMBER	FUNCTION
00-03	Y0 (DMA)	Write commands to the DMA.
04	Y1 (FD1791)	Read: STATUS. Write: COMMAND.
05		Read: TRACK. Write: TRACK.
06		Read: SECTOR. Write: SECTOR.
07		Read: DATA. Write: DATA.
08	Y2 (PIO-CHA)	Read: FD1791 interrupt. Write: floppy disk drive select, side select and recording density.
09	Y2 (PIO-CHB)	Read: 9511A END, * DISK CHANGE,* PCB board type,* floppy drive type.* Write: MR to 1791, memory bank select.* Reset to 9511 for 8000 and 8100PC boards.
0A	Y2 (PIO-CHA)	Write commands to channel A.
0B	Y2 (PIO-CHB)	Write commands to channel B.
0C	Y3 (CTC-CH0)	Baud rate generator for console number 1 at JY.
0D	Y3 (CTC-CH1)	Unused (formerly generated delay for head load).
0E	Y3 (CTC-CH2)	Baud rate generator for printer number 1 at JX.
0F	Y3 (CTC-CH3)	Floppy disk drive index counter.
10	Y4 (PIO-CHA)	Parallel port I/O at J4 (normally used in I/O mode).
11	Y4 (PIO-CHB)	Parallel port I/O at J4 (normally used for data in an I/O only mode).
12	Y4 (PIO-CHA)	Write commands to channel A.
13	Y4 (PIO-CHB)	Write commands to channel B.
14-17	Y5 (IPL)	A write to any of these ports turns off the PROM after the initial program load (IPL).
18	Y6 (9511)	Write: data into stack. Read: data from stack.
19	Y6 (9511)	Write: command. Read: status.
1A	Y6 (9511)	Write: data into stack. Read: data from stack.
1B	Y6 (9511)	Write: command. Read: status.
1C	Y7 (SIO-CHA)	Read/write data to I/O port at JY (normally console number 1).
1D	Y7 (SIO-CHA)	Write commands to channel A. Read status of Channel A.
1E	Y7 (SIO-CHB)	Read/write data to I/O port at JX (normally printer number 1).
1F	Y7 (SIO-CHB)	Write commands to channel B. Read status of Channel B.

*Function available only on 8200 circuit board.

COMPONENTS ON THE 8200 CIRCUIT BOARD

PORT NUMBER	SCHEMATIC REFERENCE	FUNCTION
20	Y8 (HD DSK)	Write drive and head number to hard disk controller. During data transfer to or from the hard disk, any of these ports (20-23) may be used as the data I/O port. (However, this address should only be accessed by the DMA to read or write data. The registers are write only when accessed by the CPU.)
21	Y8 (HD DSK)	Write sector number and old cylinder number to the hard disk controller.
22	Y8 (HD DSK)	Write new track number to the controller.
23	Y8 (HD DSK)	Write command to the controller.
24	Y9 (PIO-CHA)	Read: status of the hard disk controller. Do not write.
25	Y9 (PIO-CHB)	Write: memory write protect bit. Read: hard disk configuration and memory size.
26	Y9 (PIO-CHA)	Write commands to channel A.
27	Y9 (PIO-CHB)	Write commands to channel B.
28	Y10 (SIO-CHA)	Read/write data to I/O port at JV (normally printer number 2).
29	Y10 (SIO-CHA)	Write commands to channel A. Read Status of Channel A.
2A	Y10 (SIO-CHB)	Read/write data to I/O port at JW (normally console number 4).
2B	Y10 (SIO-CHB)	Write commands to channel B. Read Status of Channel B.
2C	Y11(SIO-CHA)	Read/write data to I/O port at JT (normally console number 2).
2D	Y11 (SIO-CHA)	Write commands to channel A. Read Status of Channel A.
2E	Y11 (SIO-CHB)	Read/write data to I/O port at JU (normally console number 3).
2F	Y11 (SIO-CHB)	Write commands to channel B. Read Status of Channel B.
30	Y12 (CTC-CH0)	Baud rate clock for console number 2 at JT.
31	Y12 (CTC-CH1)	Baud rate clock for consoles numbered 3 and 4 JU and JW.
32	Y12 (CTC-CH2)	Baud rate clock for printer number 2 at JV.
33	Y12 (CTC-CH3)	Real time clock generator for time slicing the usage of the processor.

BIT ASSIGNMENT FOR THE I/O PORTS FUNCTIONS AVAILABLE ON 8000, 8100 AND 8200 CIRCUIT BOARDS

PORT	BIT	DESCRIPTION
00-03 (DMA)		(Not applicable).
04-07 (FD1791)		(See the Western Digital FD1791 data sheet.)
08 (PIO-CHA)	BIT 7	SIDE SELECT for selecting the side (top or bottom) of the diskette to read or write on. Not supported under CP/M or MP/M.
	6	INTERRUPT input from the 1791.
	5	DRIVE SELECT 4 to select drive D.
	4	DRIVE SELECT 3 to select drive C.
	3	DRIVE SELECT 2 to select drive B.
	2	DRIVE SELECT 1 to select drive A.
	1	HLD input from the 1791 to indicate when the head is loaded. 0=not loaded, 1=loaded.
	0	DDEN negated, output to set the recording mode. 0=double density, 1=single density.
09 (PIO-CHB)	BIT 7*	Hardware switch indicates the type of floppy disk drives in the system. 0=SA800, 1=SA850.
	6*	Hardware switch input to indicate the type of computer PCB. 0=8000 or 8100, 1=8200.
	5	(Unassigned).
	4*	UN2, MSB of a two bit number to select the memory bank to be used.
	3*	UN1, LSB of the above number.
	2*	DISK CHANGE negated, input from the floppy disk drive. (See disk drive spec sheet for details.)
	1	MR (master reset) negated output to the FD1791. Normally a 1, take to 0 for 50 microseconds to reset.
	0*	END, input from the 9511 to indicate the completion of a calculation. On the 8000 and 8100 circuit board this is RESET output to the 9511.
0C (CTC-CH0)	In	2Mhz.
	Out	Baud rate for channel A of the SIO that outputs to JY (normally console number 1).
0D (CTC-CH1)	In	2Mhz.
	Out	(Not attached, on some 8000 or 8100 PCBs this was connected to the HLD signal from the 1771/1791 floppy disk controller chip.)
0E (CTC-CH2)	In	2Mhz.
	Out	Baud rate for channel B of the SIO that outputs to JX (normally printer number 1).
0F (CTC-CH3)	In	Index pulses from the selected floppy disk drive.
	Out	(None).
10 (PIO-CHA)	BIT 7	(Unnamed) normally input from printer to the PIO.
	6	SELECT, normally input from printer to the PIO.
	5	BUSY, normally input from printer to the PIO.
	4	PAPER EMPTY, normally input from printer to the PIO.
	3	FAULT, normally input from printer to the PIO.
	2	CNTL, normally an output to the printer.
	1	INPUT PRIME, normally an output to the printer.
	0	DATA STROBE, normally an output to the printer.
11 (PIO-CHB)	BIT 7	DATA 7, normally an output to the printer.
	6	DATA 6, normally an output to the printer.
	5	DATA 5, normally an output to the printer.
	4	DATA 4, normally an output to the printer.
	3	DATA 3, normally an output to the printer.
	2	DATA 2, normally an output to the printer.
	1	DATA 1, normally an output to the printer.
	0	DATA 0, normally an output to the printer.
14-17 (IPL)		(Not applicable.)
18,19 (9511)		(See the AMD9511 specification sheet).
1C (SIO-CHA)		(Not applicable.)
1E (SIO-CHB)		(Not applicable.)

*Available only on 8200 Circuit Board.

AVAILABLE ON 8200 CIRCUIT BOARD

PORT	BIT	DESCRIPTION
1E (SIO-CHB)		(Not applicable.)
20-23 (Hard disk)		(See the HARD DISK interface specification in Section E below.)
24 (PIO-CHA)	BIT 7	READY, input from the selected hard disk.
	6	WRITE FAULT, input from the selected hard disk.
	5	(Unassigned.)
	4	CRC ERROR, input from the hard disk controller.
	3	RECORD NOT FOUND, input from the hard disk controller.
	2	BAD SECTOR, input from the hard disk controller.
	1	TASK COMPLETE, input from the hard disk controller.
	0	BUSY, input from the hard disk controller.
25 (PIO-CHB)	BIT 7	(Unassigned.)
	6	(Unassigned.)
	5	WRITE PROTECT, output to the hardware to prevent writing into the upper 16K of memory space. 0=not protected, 1=write protected.
	4	MEM SIZE, hardware switch input to describe the number of memory banks on the PCB. MSB of a two bit number.
	3	MEM SIZE, LSB of the above two bit number.
	2	DISK SIZE, hardware switch input to describe the size and number of hard disks attached to the system. MSB of a three bit number.
	1	DISK SIZE, middle bit of the above number.
	0	DISK SIZE, LSB of the above number. See below for the memory and disk size codes.
28 (SIO-CHA)		(Not applicable.)
2A (SIO-CHB)		(Not applicable.)
2C (SIO-CHA)		(Not applicable.)
2E (SIO-CHB)		(Not applicable.)
30 (CTC-CH0)	In	2Mhz.
	Out	Baud rate for channel A of the SIO that outputs to JT (normally console number 2).
31 (CTC-CH1)	In	2Mhz.
	Out	Baud rate for channel B of the SIO that outputs to JU and channel B of the SIO that outputs to JW (normally consoles 3 and 4).
32 (CTC-CH2)	In	2Mhz.
	Out	Baud rate for channel A of the SIO that outputs to JV (normally printer number 2).
33 (CTC-CH3)	In	2Mhz.
	Out	(none.)

MEMORY SIZE TABLE

Y9 Bit 4	Y9 Bit 3	Number of memory banks
0	0	1 (bank 0)
0	1	2 (banks 0 and 1)
1	0	3 (banks 0,1 and 2)
1	1	4 (all banks)

DISK SIZE AND CONFIGURATION TABLE

Y9 Bit 2	Y9 Bit 1	Y9 Bit 0	Drive 1	Drive 2
0	0	0	none	none
0	0	1	SA4004 (13MB)	none
0	1	0	SA4008 (26MB)	none
0	1	1	(unallowed combination)	
1	0	0	SA4004	SA4004
1	0	1	(unallowed combination)	
1	1	0	SA4008	SA4004
1	1	1	SA4008	SA4008

C. ACS8000 INTERFACE CONNECTOR WIRING

The following list indicates the pin connections of the device connectors on the rear of the ACS8000 chassis. All of the console connectors are serial Input/Output devices as is the serial printer jack. The auxiliary printer connector is a parallel Input/Output device available to the user. Figures one and two contain diagrams of the locations of various connectors and their relationship with various serial and parallel ports.

Serial Input/Output Connector

PIN	USE
1	Chassis ground.
2	Received data.
3	Transmitted data.
4	Request to send.
5	Clear to send.
6	Data set ready.
7	Signal ground.
20	Data terminal ready.

Other pins are not used. Pins 4 and 5 are not normally implemented

Parallel Input/Output Connector

PIN	USE
1	Data Strobe
2	Data 0
3	Data 3
4	Data 1
5	Data 6
6	Data 7
7	Acknowledge
8	Busy
9	Data 2
10	Data 4
11	Data 5
12	Control
13	Select
14	+5 Volts
15	Paper Empty
16	−12 Volts
17	Input Prime
18	Floating
19	Floating
26	Unassigned
34	Fault
35	Unassigned
36	+12 Volts

All of the remaining pins are ground.

D. OPERATING SYSTEM INTERFACE

The CP/M, MP/M and AMEX operating systems can interface to non-standard hardware through the serial and parallel I/O ports. Primitive operating system calls allow the user to directly address these ports and to pass commands and receive and send data. The documentation for each operating system describes these calls in detail. The manuals for each operating system are listed at Appendix A.

E. HARD DISK INTERFACE

Interfacing to the hard disk drive is normally handled by the operating system. In that mode the sector, track, head, and cylinder numbers are transparent to the user who specifies only file names. The user should consult the appropriate operating system manual for the details of the software interface. The rest of this section concerns those users not operating under the aegis of an ALTOS supplied operating system.

The hard disk is interfaced to the rest of the system via two separate hardware paths: one is Channel A of a PIO at address 024H which reports on the status of the drive and controller. The second path is through a group of registers addressed at 020H-023H. This group is used to write commands out to the controller, send out cylinder, drive, head and sector numbers as well as to send data between the disk and system memory. Data from the disk is all that can be read through this path as the command, cylinder, drive, head and sector registers are write only. A READ of any of these ports would only supply garbage.

Data is transferred between the drive and system memory by means of a Z80 DMA circuit chip. Prior to doing a data transfer, the DMA must be programmed for "CONTINUOUS" transfer from memory to the disk's I/O port (or vice versa depending upon the command) with a two cycle read and two cycle write. The memory port should be set to increment from the desired address... the disk I/O port is fixed at 020H. The number of transfers will also depend upon the command.

STATUS BYTE

The STATUS BYTE (READ from port 024H) contains the following bits:

BIT 7	READY
BIT 6	WRITE FAULT
BIT 5	(UNASSIGNED)
BIT 4	CRC ERROR
BIT 3	RECORD NOT FOUND
BIT 2	BAD SECTOR
BIT 1	TASK COMPLETE
BIT 0	BUSY

READY indicates when the drive is ready to be accessed. When initially powered on, the drive will not be ready and requires approximately 1.5 minutes to reach speed and become ready. During this time READ's, WRITE's and head motion are prohibited by the drive itself. Any such command will wait until the Ready condition is true before commencing.

WRITE FAULT is another signal from the drive. It indicates a FAULT condition involving the write heads, and must be cleared by a FAULT CLEAR command to the drive before the drive can be written to. However, if a FAULT CLEAR command is issued without WRITE FAULT being true, WRITE FAULT will go true and thus inhibit write operations until FAULT CLEAR is made false.

CRC ERROR (CYCLIC REDUNDANCY CHECK ERROR) is an indication that the data read back from the disk is in error. Two CRC bytes are appended to both the Sector ID and the data field itself during a WRITE operation to the disk. This is done automatically by a circuit in the hard disk controller. When data is read back from the disk this same CRC circuit checks all the data (including the appended bytes) and determines whether the data has been read correctly. If the data is in error, the CRC ERROR will be set true. This same type of check is made on the Sector ID and a READ or WRITE of a sector will not occur if the ID shows a CRC ERROR.

RECORD NOT FOUND is an indication that the specified ID was not found on the addressed track during a READ or WRITE SECTOR operation. The disk hardware makes a check of the specified cylinder, head and sector... if there is no match the RECORD NOT FOUND flag is set true and the operation aborted.

BAD SECTOR is an indication that the addressed sector has a media defect that makes the sector unusable. This is determined before shipment from the ALTOS factory by reading and writing various data patterns to the disk. Sectors which are found to be unreliable are labled in their Sector ID as bad sectors, and if a READ or WRITE operation to such a sector is attempted, the Bad Sector Flag will be set and the operation aborted.

TASK COMPLETE is an indication to the operating system that the requested command has been completed and (with the exception of the 20MS delay required following a HOME or SEEK) the system is ready for the next operation. The RESET command does not result in a TASK COMPLETE. Commands RECAL, SEEK, FORMAT, WRITE, READ DATA and READ ID all generate the TASK COMPLETE indication. The TASK COMPLETE indication is cleared upon the issuance of another command.

BUSY is an indication that the system is in the process of carrying out a command.

COMMANDS

Commands are sent to the controller via port 023H. Only one command should be issued at a time. Each command is cleared by the controller when the operation is complete (i.e., a byte of zeroes is not needed to terminate the command). The Status Bit "TASK COMPLETE" will signal this completion. Because of the mechanical motion involved in doing a SEEK or RECAL command, these operations require an additional 20MS of settling time after the TASK COMPLETE bit goes true in order for vibra-

tions to cease prior to reading or writing to or from the disk.

The Command Byte consists of the following:

BIT 7 RESET
BIT 6 (UNASSIGNED)
BIT 5 RECAL
BIT 4 SEEK
BIT 3 READ ID
BIT 2 READ DATA
BIT 1 WRITE
BIT 0 FORMAT

RESET initializes all the registers and counters in the controller. This is also done by hardware at power-up and should not be needed during normal operation. Issuing a RESET during an operation will abort the operation currently in progress.

RECAL initializes the position of the heads over cylinder zero. This should be done following power-on and before the disk is accessed, so that the heads will be in a known location. It should also be executed as part of an error recovery procedure when a RECORD NOT FOUND is detected in case the heads have moved from where the operating system believes they are located.

SEEK is the command which causes the heads to step from one cylinder to another. Prior to SEEKING, the current (old) cylinder number must be loaded into port 021H (which also doubles as the sector port) and the desired (new) cylinder number must be loaded into port 022H. Then the SEEK command may be issued. Note that the RECAL command does not set the current (old) track register to zero; this must be done by the operating system prior to issuing a subsequent SEEK command.

The following four command do reads and writes to the disk. Prior to issuing these commands, the heads should be positioned over the desired cylinder, the appropriate head should be selected, the sector port should be loaded, and the cylinder port should be correct (this new cylinder number should not have changed since the previous SEEK command).

READ ID is the command to read the ID or address field of a specific sector. This field consists of a flag, cylinder, drive/head, sector and two CRC bytes. Since the disk is hard sectored, the specific sector is located by positioning the heads, selecting a particular head, and loading the desired sector number. The READ ID function merely reads off the bytes on the disk at the header for this sector.

READ DATA is the command to read the 1024 bytes of data at the specified sector. Before reading the data, the ID is compared for the flag byte (being zero), the values of cylinder, drive/head, and sector that have been specified and for a CRC match. If these bytes do not match, the READ DATA function is aborted and the appropriate status bit set. The data is read off of the disk and written into a buffer area in memory specified by the address programmed into the DMA.

WRITE DATA is the command to write from a 1025 byte buffer in memory (1 byte of 00DH followed by 1024 bytes of data) to the specified sector on the disk. As in the READ DATA function, an ID comparison is made and if the comparison is not correct the WRITE DATA operation is aborted and the appropriate status bit is set.

FORMAT is the command to write the ID for one specific sector on the disk. The sector is specified as before by positioning the heads on the desired cylinder, selecting the desired head, and loading the sector number. The ID is then transferred from a buffer in memory which has a SYNC Byte (00FH), flag byte (normally 000H), cylinder number, drive/head number and sector number. The command writes these bytes into the specified Sector's ID field and then writes out the generated CRC bytes. No data is entered into the data field. Only one Sector's ID is written per command. To initialize the entire disk, each sector's ID must be formatted utilizing the FORMAT command.

F. HARD DISK PROGRAMMING

Before any commands can be given to a drive, it must be selected. This is done by writing out to port 020H (see DRIVE/HEAD Byte). If the drive is up to speed (about 1.5 Minutes after turning on) the READY Status should go true. Write Fault should also be monitored and if true, the fault clear bit in the DRIVE/HEAD Byte must be written true then false again (without de-selecting the drive).

The normal procedure for using the drive is to do a RECAL (or HOME of the heads) after a power-up or RESET and thereafter SEEK from track to track without any RECAL. The exception would be if an error is encountered in which case a RECAL would be executed (in particular for a "RECORD NOT FOUND" condition which suggests a seek error). Following either a RECAL or SEEK, a 20MS delay should be inserted before issuing another command (even another RECAL or SEEK).

The hardware circuits that implement the DMA function operate in such a way that one additional byte is transferred above and beyond the programmed transfer quantity. Thus to transfer six bytes, the DMA circuit should be programmed for five.

TO RECAL THE DRIVE:

1. Select the drive (load the DRIVE/HEAD port).
2. Check for WRITE FAULT, issue FAULT CLEAR if necessary.
3. Load the RECAL command (020H into port 023H).
4. Wait 20MS after TASK COMPLETE goes true.

TO SEEK TO A CYLINDER:

1. Select the drive (load the DRIVE/HEAD port).
2. Check for WRITE FAULT, issue FAULT CLEAR if necessary.
3. Load the current cylinder number into the old cylinder port (021H).
4. Load the desired cylinder number into the new cylinder port (022H).

5. Load the SEEK command (010H into port 023H).

6. Wait 20MS after TASK COMPLETE goes true.

TO READ AN ID:

1. Position the heads by doing a SEEK or RECAL if necessary.

2. Program the DMA for a continuous transfer, 2 cycle READ of the I/O port 020H, 2 cycle WRITE to the desired memory location, and for a five byte transfer (the DMA will do six).

3. Set the desired head number by loading Port 020H. Do not disturb the Drive Number or the Fault Clear lines.

4. If the cylinder number has changed since the last seek (i.e., if a RECAL has occurred), reload the new cylinder number into port 022H.

5. Load the desired sector number into port 021H.

6. Load the READ ID command (008H into port 023H).

TO READ DATA:

Follow the same procedure as for READ ID except that the DMA must be programmed to transfer 1023 bytes rather than just five. The READ DATA command is 040H into port 023H.

TO WRITE DATA:

Follow the same procedure as for READ ID except that the DMA must be programmed to transfer data from memory to the I/O port 020H. The number of transfers must be increased from 1023 to 1024 bytes (the DMA will transfer 1025). An 00DH byte must be placed in memory just ahead of the data and transferred to the disk. The WRITE command is 002H into port 023H.

TO FORMAT:

Use the same procedure as for READ ID except that the DMA must be programmed to transfer data from memory to the I/O port 020H. The number of transfers must be set to four (the DMA will transfer five). These five bytes are 00FH (a SYNC byte), a Flag Byte (normally 000H), the cylinder number (000H to 0C8H), a DRIVE/HEAD Number (see the DRIVE/HEAD byte described below), and the Sector Number (000H to 00FH for 1024 byte sectors).

The FORMAT Command is 001H into port 023H.

NOTE: Formatting at this level only lays down the ID for one sector per command. This must be repeated for every sector on the disk. Furthermore, this command does not write into the data fields, only the address fields. For operating systems such as CP/M the data fields also need to be initialized. This can be done by the WRITE DATA command described above. Once again this command must be issued once for each sector. CP/M requires that the character 0E5H be in the directory fields on the disk. This is most easily achieved by filling the data fields with 0E5H.

DRIVE/HEAD BYTE

BIT 7	(UNASSIGNED)
BIT 6	FAULT CLEAR
BIT 5	DRIVE TWO
BIT 4	DRIVE ONE
BIT 3	HS4
BIT 2	HS3
BIT 1	HS2
BIT 0	HS1

HEAD SELECT TABLE

HEAD SELECTED	HS4	HS3	HS2	HS1
0	0	0	0	0
1	0	0	0	1
2	0	0	1	0
3	0	0	1	1
4 (SA4008 ONLY)	0	1	0	0
5 (SA4008 ONLY)	0	1	0	1
6 (SA4008 ONLY)	0	1	1	0
7 (SA4008 ONLY)	0	1	1	1

The ID BLOCK consists of six bytes returned by the drive for a READ ID Command. These are:

FLAG BYTE:	NORMALLY 000H FOR A GOOD SECTOR, OTHERWISE 011H TO SIGNIFY A BAD SECTOR.
CYLINDER:	000H TO 0C8H.
DRIVE/HEAD:	THE FIRST FOUR BITS INDICATE THE DRIVE NUMBER, THE LAST FOUR THE HEAD NUMBER.
SECTOR:	000H TO 00FH FOR 1024 BYTE SECTORS.
CRC BYTES:	TWO BYTES APPENDED TO THE HEADER THAT ARE USED FOR ERROR DETECTION.

TABLE OF PORT ASSIGNMENTS

PORT 020H:	DUAL PURPOSE, I/O PORT FOR DATA TO/FROM THE DRIVE AS WELL AS THE INPUT PORT FOR LOADING THE DRIVE/HEAD REGISTER (FAULT CLEAR BIT IS PART OF THIS BYTE).
PORT 021H:	DUAL FUNCTION, INPUT PORT FOR THE CURRENT (OLD) CYLINDER NUMBER PRIOR TO DOING A SEEK AND INPUT PORT FOR THE SECTOR NUMBER PRIOR TO DOING A READ OR WRITE.
PORT 022H:	INPUT PORT FOR NEW CYLINDER NUMBER.
PORT 023H:	INPUT PORT FOR LOADING A COMMAND.
PORT 024H:	OUTPUT PORT FOR READING STATUS.

ALTOS Utility Software

Version 1.00

Packed with Fresh Ideas

Table of Contents

A. Overview 2-3
B. ALTOS Utility Commands 2-4
1. CONFIG 2-5
2. COPY 2-6
3. DCOPY 2-7
4. DOUBLE 2-8
5. FLPYFORM 2-9
6. MODE 2-10
7. SETUP 2-11
8. SINGLE 2-12

A. OVERVIEW

ALTOS provides utility software to assist the user in efficient utilization of the ASC8000 system.

This software is available only to users of AMEX, CP/M or MP/M operating systems.

The user should review command syntax prior to utilization of these commands. Command syntax is a topic in the operating system documentation of AMEX, CP/M and MP/M.

The ALTOS utility software modules are distributed on either the ALTOS Diagnostic Diskette or on the operating system diskette for the CP/M, MP/M and AMEX operating systems. In the detailed description of each utility the location of the utility is noted.

B. ALTOS UTILITY COMMANDS

Listed below are the ALTOS utilities. Following this list is a detailed discussion of each command. The user will note that several of the commands operate with only some of the operating systems available for use on the ACS8000. The user must ensure that the utility is valid for the specific installation operating system. Included within the list is the specific page on which the command is discussed in depth.

COMMAND	DESCRIPTION	PAGE
CONFIG	Displays The Current Configuration For ACS8000 Systems Which Are Built On The 8200 Chassis	
COPY	Copy Files, Systems Tracks Or Both From One Single Density Diskette To Another Single Density Diskette	
DCOPY	Copy Files, Systems Tracks Or Both From One Double Density Diskette To Another Double Density Diskette	
DOUBLE	Specify A Floppy Disk Is To Operate In ALTOS Double Density Format	
FLPYFORM	Reformat A Floppy Disk To A New Recording Density	
MODE	Set A Disk Drive's Recording Density And Side Configuration	
SETUP	Configure The System For Default Disk Density And Number Of Sides, Clock Speed And Printer Speed And Type	
SINGLE	Specify A Floppy Disk Is To Operate In Single Density Format	

Command CONFIG

Location

Diagnostic Diskette

Description

The CONFIG command displays the current configuration of the system, for ACS8000 systems built on the 8200 Chassis.

Usage

Command CONFIG is used to display the current configuration of the system. This command is utilized to verify the user pinnable options, such as the number of memory banks and Winchester disks currently installed.

Syntax

CONFIG

Interpretation Of Results

SA8000 SINGLE-SIDED FLOPPY

This message describes the characteristics of the floppydisks installed in the system. The two options are single or double-sided disks.

2 MEMORY BANKS

The number of memory banks which are currently specified in the System Description Block.

SA4004 WINCHESTER DISK AT DRIVE 1

The currently installed Winchester disk drive (s) on the Primary (Drive 1) and Additional (Drive 2) disk drive ports.

Error Conditions

If the CONFIG command is utilized on an ACS8000 which is not built on the 8200 (Multi-User) Chassis then the user will be given an error message.

Command COPY

Location

Diagnostic Diskette

Description

Copies files, system tracks or both from one single-density diskette to another single-density diskette.

Usage

Command COPY is the fastest way to back up one single-density diskette to another. The COPY command utilizes full track reads and writes in doing the I/O. The COPY command verifies the data transfer by re-reading the data from the target disk.

Syntax

COPY (SYSTEM) (DATA) (ALL)
(e.g., COPY ALL or COPY SYSTEM)

The COPY command will transfer from the diskette in drive A to the diskette in drive B.

Interpretation of Results

The "COPY ALL" format of the COPY command copies all tracks of the diskette in drive A to the diskette in drive B.

The "COPY SYSTEM" format copies only the system tracks (tracks 0 and 1) of the diskette in drive A to the diskette in drive B. This form of COPY can be used to generate a bootable diskette. The user is responsible for ensuring that any other files which are necessary on a "bootable" diskette are mover (e.g., AMEX.SYS for AMEX systems).

The "COPY DATA" format copies only the data tracks (tracks 2 through 77) from the diskette in Drive A to the diskette in drive B.

THIS UTILITY IS NOT AVAILABLE WHEN USING THE MP/M OPERATING SYSTEM

Error Conditions

If errors are detected in reading or writing of data the operating system will inform the user with a permanent disk error message.

Command DCOPY

Location

Diagnostic Diskette

Description

Copies files, system tracks or both from one double-density diskette to another double-density diskette.

Usage

Command DCOPY is the fastest way to back up one double-density diskette to another. The DCOPY command utilizes full track reads and writes in doing the I/O. The DCOPY command verifies the data transfer by re-reading the data from the target disk.

Syntax

DCOPY (SYSTEM) (DATA) (ALL)
(e.g., DCOPY ALL or DCOPY SYSTEM)

The DCOPY command will transfer from the diskette in drive A to the diskette in drive B.

Interpretation Of Results

The "DCOPY ALL" format of the DCOPY command copies all tracks of the diskette in drive A to the diskette in drive B.

The "DCOPY SYSTEM" format copies only the system tracks (tracks 0 and 1) of the diskette in drive A to the diskette in drive B. The system tracks are copied in single-density mode so that the diskette may be booted. This form of DCOPY can be used to generate a bootable diskette. The user is responsible for ensuring that any other files which are necessary on a "bootable" diskette are moved (e.g., AMEX.SYS for AMEX systems).

The "DCOPY DATA" format copies only the data tracks (tracks 2 through 77) from the diskette in drive A to the diskette in drive B.

THIS UTILITY IS NOT AVAILABLE WHEN USING THE MP/M OPERATING SYSTEM

Error Condition

If errors are detected in reading or writing of data the operating system will inform the user with a permanent disk error message.

Command DOUBLE

Description

Sets the specified floppy disk drive to ALTOS double density format for subsequent I/O operations. This command allows the user to utilize both single and double density diskettes with a single drive able to be configured to read and write in either density.

Syntax

DOUBLE drivename (e.g., DOUBLE B:)

Implementation Note

This command sets the proper mode within the operating system. A drive's ability to function in double-density mode depends upon the electronics in the ACS8000 system. All ACS8000 systems except the models 8000/1, 8000/1S, 8000/3 and 8000/3S contain the appropriate electronic controllers.

Error Conditions

None

THIS UTILITY IS AVAILABLE WITH CP/M V1 AND AMEX OPERATING SYSTEMS

Command FLPYFORM

Location

Diagnostic Diskette

Description

The FLPYFORM command formats a diskette to allow I/O operations in the proper format.

Usage

The ACS8000 supports two floppy disk formats (1) IBM standard single-density, and (2) ALTOS double-density format. It is necessary to format a disk prior to use unless it has been formatted by the manufacturer. The formatting process writes Sector ID's for each sector on the disk and writes the proper character on the disk to indicate to the operating system that the disk conains no files. Since the ALTOS double-density format is unique, all diskettes will require formatting prior to their use in double-density mode. It is also sometimes necessary to reformat a diskette if the format has been destroyed by a program function or magnetic transient.

Syntax

FLPYFORM

Following program loading the FLPYFORM command will display the following menu of functions available. Simply select the required function and type <cr>. The FLPYFORM program will then request that the diskette to be formatted be placed in the selected disk drive. Once the diskette is installed, enter <cr> and the reformatting process will begin.

1. STANDARD SINGLE-DENSITY FORMAT ON B:
2. STANDARD SINGLE-DENSITY FORMAT ON D:
3. DOUBLE-DENSITY FOR CP/M OR DIAGNOSTIC DISK ON B:
4. DOUBLE-DENSITY FOR CP/M OR DIAGNOSTIC DISK ON D:
5. DOUBLE-DENSITY FOR MP/M ON B:
6. DOUBLE-DENSITY FOR MP/M ON D:

Error Conditions

No error conditions are generated within the FLPYFORM command. In the event of a disk I/O error an error message generated by the operating system is displayed on the user's terminal.

Command MODE

Utility Location

Operating System Diskette

Description

The ACS8000 family of computers can be configured with electronics and floppy disk drives which can both record in either single or double-density, and be single or double-sided. MODE specifies the desired operating characteristics of a floppy disk within the system. As part of the system generation of AMEX a user specifies the default standards of the installation utilizing the SETUP command. This command is utilized to override these defaults. Specification of a floppy disk drive MODE which is not supported by the electronics or drives installed in the ACS8000 will cause errors when the floppy disk drive is accessed.

Syntax

MODE drivename modenumber (e.g., MODE B: 3)

Mode numbers represent the following configurations.

0=SINGLE-SIDE, SINGLE-DENSTIY FLOPPY

1-=NEW DOUBLE-DENSITY FORMAT (Not Yet Avail.)

2=SINGLE-SIDE, ALTOS DOUBLE-DENSITY FLOPPY

Error Conditions

None

THIS UTILITY IS AVAILABLE WITH CP/M V 2, MP/M AND AMEX OPERATING SYSTEMS

Command SETUP

(Non-Resident Command)

Description

The SETUP command sets five internal operating constants into the operating system. When the operating system is next started (i.e., booted from a diskette) these constants will automatically be in effect.

Usage

The SETUP command allows the user to tailor the operating system to a particular physical environment. For example, if the system printer is changed to a model with a different speed, SETUP allows the user to enter the printer information into the system once so that with each start of operating system this information becomes the installation default.

Syntax

SETUP

The SETUP program is interractive and prompts with five questions to be answered by the user. The prompts are:

(1) ENTER SYSTEM SPEED, 2MHZ OR 4 MHZ. The ACS8000 system clock rate has a standard value of 4MHZ, so the response to the prompt is 4 <cr> for standard systems.

(2) The next entry is the speed of the system printer attached through the specified Serial I/O port. If the Centronix printer is used on the Parallel I/O Port as the system printer, the operating system is informed. A menu of allowable values is presented to the user. If the Centronix printer is utilized enter 1. The remaining 7 responses reflect varying speeds (baud rates) at which the printer is to operate. Select the proper value at which the printer operates (either as a hardware default or through user setup). Select the desired value followed by <cr>.

(3) SELECT AUXILIARY PORT BAUD RATE. This speed (baud rate) which is to be used for devices attached to the Auxiliary Serial I/O Port is entered utilizing the menu of values specified in the system printer query above. If the auxilliary port is not utilized enter any of the values.

(4) SELECT DEFAULT MODE FOR FLOPPY DISKS, 0 (SINGLE), 2 (DOUBLE). When the system is booted the operating system will expect diskettes in both floppy disk drives to be of the density specified. The system tracks (tracks 0 and 1) on bootable diskettes are always read in single-density. This setting affects only the data tracks.

(5) SELECT SINGLE OR DOUBLE-HEADED DISKS, 0 (SINGLE), 2 (DOUBLE). When the system is booted, the operating system will determine whether to allow access to both side of a diskette based on this parameter. If "2" is entered then specification of disks C and D is treated as valid disk drive addresses.

After these values have been entered, the SETUP command has built a memory control block which must be written out to the system tracks of a diskette. SETUP instructs the user to place the desired diskette in drive B and enter <cr>. SETUP will then write out the values which wil take effect when this diskette is booted.

Implementation Notes

An incorrect setting of the density default parameter will result in the diskette being unusable as a system disk (e.g., the recording density of the system diskette must match the assigned default density). If the default density is for double-density operation and the diskette being booted is single-density then an I/O error will occur when the operating system attempts to read the diskette. This is caused by the system attempting to read the directory with the improper density setting. You will be unable to enter any commands to correct the situation with this diskette. The solution is to boot the system with a proper diskette, load the improperly configured diskette and execute a correct SETUP command.

Command SINGLE

(Non-Resident Command)

Description

The SINGLE command sets the specified disk drive to single-density read/write mode.

Usage

This command is generally used when the system is operating in double-density mode as the default and it becomes necessary to read or write a single-density diskette. This often occurs when unloading a diskette from another user or preparing a diskette with files for use in another installation.

Syntax

SINGLE drivename (e.g., SINGLE B:)

Error Conditions

None within the SINGLE command. If a nonexistant or inconsistent disk drive is specified then AMEX will generate a Disk Manager error message.

THIS UTILITY IS AVAILABLE WITH CP/M V 1 AND AMEX

ACS8000 Diagnostic System Manual

Version 1.00

Packed with Fresh Ideas

Table of Contents

A. ALTOS Maintenance Philosophy 3-4
B. Technical Description of System 3-4
C. ALTOS Diagnostic Diskette 3-6
D. Installing The ALTOS Diagnostic System 3-6
E. Troubleshooting Guide
  1. Terminal Problems 3-7
  2. Memory Or Disk Problems 3-7
  3. Permanent Disk Errors 3-7
  4. Printer Problems 3-7
F. Memory Testing 3-8
G. Diskette Drive Testing—FLPYTEST
  1. Floppy Disk Status Codes 3-10
  2. Running FLPYTEST Diagnostic 3-10
H. Hard Disk Testing—HARDTEST
  1. Hard Disk Error Indications 3-12
  2. Permanent Error Status Codes 3-12
  3. The HARDTEST Diagnostic Utility
    A. Invoking and Utilizing HARDTEST 3-12
    B. HARDTEST Functions 3-13
  4. Hardware Problem Diagnosis 3-14
  5. Media Problem Diagnosis 3-14
  6. Assigning Alternate Sectors 3-15
I. Printer Testing 3-18

THE APPENDICES AND FIGURES REFERENCED IN THIS MANUAL ARE CONTAINED IN THE "ALTOS APPENDICES AND FIGURES" MANUAL. THIS IS THE TABLE OF CONTENTS FOR THAT MANUAL.

Appendices

A. Manual References 4-3
B. Z-80 Microprocessor OpCode List 4-4
C. ALTOS Interface Connector Wiring 4-6
D. Input/Output Port Assignments 4-7
E. Disk Controller Status 4-10
F. System Startup And Shutdown Checklist 4-12
G. Multi-User System Interrupt Priority 4-13
H. Circuit Chip Location Map 4-14
I. ACS8000 Models And Facilities 4-15
J. Operating Software Systems Requirements 4-16
K. 8200 Circuit Board System Description Block 4-17
L. Hard Disk Bad Sectors 4-19
M. Field Upgrading ACS8000/5 Systems 4-20

Figures

1. Front And Rear Panel—One Floppy Disk F-1A
2. Front And Rear Panel—Two Floppy Disks F-1B
3. Front And Rear Panel—Multi User Systems F-2
4. Disk Insertion F-3
5. General Microcomputer System Diagram F-4
6. ACS8000 Block Diagram F-5
7. Memory Chip Location Diagram F-6
8. Circuit Chip Location—Chassis 8000 ..... F-7A
9. Circuit Chip Location—Chassis 8100 ..... F-7B
10. Circuit Chip Location—Chassis 8200 ..... F-7C
11. Multi-User System Memory Locations F-8
12. Winchester Disk Setup F-9
13. Winchester Disk Connection F-10
14. Winchester Disk Address Pinning F-11

A. ALTOS MAINTENANCE PHILOSOPHY

The objective of this maintenance manual is to allow the user in the field to (1) quickly and accurately determine if there is a hardware problem within the user's ACS8000 system, and (2) to determine the faulty system component. For those users with access to semiconductor components, components may be replaced in the field when the diagnosis locates the part with absolute certainty.

The starting point of the ALTOS Diagnostic System is to identify the portion of the system that is failing. For example, if a terminal attached to the system no longer functions, the problem may lie in the terminal or in the ACS8000. By identifying the failing subsystem the system user can then both have the failing component repaired, and in many instances continue to utilize the system in a degraded mode (e.g., replace the failed terminal with another while the failing terminal is repaired).

Once the failing subsystem has been identified, the Diagnostic System provides diagnostic utilities which will allow the user to gather detailed information about any failure of ACS8000 subsystems (CPU, floppy disks and hard disk).

In those instances where the ALTOS Diagnostic System indicates an error in the ACS8000 the user should contact either the ALTOS Maintenance Facility in San Jose, California or the ALTOS distributor for instructions on how to proceed.

B. TECHNICAL DESCRIPTION OF SYSTEM

The ALTOS ACS8000 computer consists of the following main components:

Power Supply
One Or Two Shugart Disk Drives
Circuit Board
Optional Winchester Disk Drive

The power supply and disk drives are standard, off-the-shelf assemblies. These will not be discussed in detail. Maintenance procedure manuals from the manufacturer are included as Appendices to this manual.

The ALTOS circuit board contains four major electrical systems, which correspond roughly, but not exactly, to physical layout sections on the board. Figures 7A, 7B, and 7C contain the layouts for the three ACS8000 circuit boards. The board is marked with a number-letter matrix system which facilitates the location of any particular integrated circuit chip. For example, a PIO port chip at location 18FG can be quickly located by looking along the top of the board for the column 18 area, and then down the right, or rear, edge of the board for the F and G row areas. The PIO port chip will be found at the intersection of the two areas.

At Appendix H you will find a list of the integrated circuit chips with their function and board location for each of the three ACS8000 circuit boards. The following paragraphs will reference the electronic circuitry by chip function. Appendix H will cross reference this to the actual location on the circuit boards shown in Figures 7A, 7B and 7C.

The major electrical subsystems of the circuit board are the CPU and main control section, the disk control and drive section, the memory, and the I/O (input/output) section. The CPU section includes the DMA (direct memory acess) and FPP (floating point processor) when these options are present.

The CPU used in the ACS8000 system is the Z-80. Additional control circuits are used to provide the address bus buffering, memory and I/O port selection logic, and timing. System timing is from an 8 MHz oscillator, with a binary divider to provide the basic clock rate of 4 MHz.

A CTC (counter-timer circuit) provides further subdivision of the basic clock to provide an I/O clock rate appropriate for the console and printer ports. It also provides the delay required for the proper operation of the disk drive mechanisms.

The memory control logic is straightforward and can be seen in the schematic diagrams. The ROM in the ACS8000 is switched into the circuit when power is first applied. The ROM does not occupy any part of the memory assignment space after it has bootstrap loaded the operating system, or performed its other monitor funcitons. The term "phantom ROM" or "shadow ROM" is sometimes applied to this concept.

The floppy disk drive control logic is also straightforward. One half of the floppy disk control PIO (parallel I/O) port chip is devoted to the drive select logic. Other control functions are performed by the floppy disk controller chip (INS1771, FD1791 or FD1771). On the 8000 and 8100 circuit boards the other half of the floppy disk control PIO chip is used only for resetting of the AM9511 floating point processor, when the FPP option is used. On the 8200 the second half of the floppy disk PIO is used for system definition at the time power is applied and the ROM is loaded, and to monitor the END signal from the AM9511A.

In addition to the floppy disk control PIO port, a second dual channel user function PIO chip is provided. This port is not used by the ACS8000 and is available for use as desired. Some wiring by the user will be required in order to use this port, since its use will always be for a tailor-made application. However DIP (dual inline package) sockets are provided so that added wiring can be simply plugged into the computer board. No cutting or modifications to the existing circuitry are required.

Console and printer input and output is provided through the dual-channel SIO (serial input/output) ports. In multi-user systems, multiple SIO ports are provided for multi-console management and user devices.

This chip is programmed by the monitor program when the system is first turned on, and again whenever the RESET button is pressed. It may be reprogrammed when the operating system program is loaded if the system has been altered with the SETUP program to provide a non-standard baud rate for the printer port channel. If desired, it may also be reprogrammed at any time by the system user, by writing a reprogramming sequence into any program.

All common functions for the disk drives, the memory, and the I/O ports are provided by the integrated hardware and software of the ACS8000. But there is still considerable flexibility provided for user-defined special I/O functions, through proper programming.

C. ALTOS DIAGNOSTIC DISKETTE

With each ACS8000 a Diagnostic Disk is shipped which contains the ALTOS Diagnostic Utilities. This system executes under its own operating system and must operate in a stand-alone mode. The system is entered by placing the Diagnostic Diskette into disk drive A and pressing RESET. The Diagnostic Operating System will then be loaded and a menu of Diagnostic Utilities is displayed.

The Diagnostic Utilities available are:

MEMTEST	Tests system and user memory. Identifies failing memory chips.
FLPYTEST	Tests floppy disk drives.
HARDTEST	Tests Winchester hard disk drives and allows for user correction of media errors.
FLPYFORM	Formats a diskette for proper operation.
ADXSETUP	Adds user constants to the ALTOS Diagnostic System.
CONFIG	Displays system configuration for 8200 chassis.
PRNTEST	Tests printer.

The CONFIG and FLPYFORM programs are described in detail in the ALTOS Utility Software Manual.

D. INSTALLING THE ALTOS DIAGNOSTIC SYSTEM

The ADXSETUP utility allows the user to tailor the Diagnostic System to a particular installation. This utility should be run only once to see the proper parameters. It is invoked by responding "ADXSETUP" to the "ENTER COMMAND" prompt of the Diagnostic Operating System.

ADXSETUP then queries for:

1. the baud rate of the user teminal. This appears in the form of a menu of allowable values;
2. the baud rate of the system printer, again with a menu of allowable values;
3. the baud rate of the auxilliary port...this field is currently unused;
4. the default floppy disk mode...single density mode is indicated as 0, while double density mode is indicated by 2;
5. the number of sides for the floppy disks...single-sided disks are indicated by 1, while double sided are indicated by 2.

After this information is entered, the Diagnostic Operating System creates an updated version reflecting this information in memory. The user is then instructed to place the Diagnostic Disk to be updated into drive B and to press RETURN. This causes the updated Diagnostic Operating System to be written to the disk drive in B. If the user wishes to update the distribution Diagnostic Disk it would be placed in drive B when instructed.

The utilities on the Diagnostic Disk have a secondary name of "DIA." They may be moved by the user utilizing a utility such as PIP.

E. TROUBLESHOOTING GUIDE

Terminal Problems

1. Symptom: no cursor visible on display.

Possible cause: no power to display.

Possible cure: check fuses; check power cord; check power outlet.

2. Symptom: message "ALTOS MONITOR SYSTEM VERSION x.xx" does not appear on console display when typing on keyboard.

Possible cause: send/receive mode not set; console not connected to computer's console jack; parity switch set to incorrect position; baud rate incorrect; brightness too low.

Possible cure: set send/receive mode; check cables and plugs; set console parity switch to "off"; set console baud rate switch to "9600 bps"; adjust brightness.

3. Symptom: incorrect symbols appear on CRT when typing.

Possible cause: parity on; incorrect baud rate.

Possible cure: set console parity to "off"; set console baud rate switch to "9600 bps."

4. Symptom: doubled symbols appear on CRT when typing.

Possible cause: console in Half Duplex mode.

Possible cure: set console to Full Duplex mode.

5. Symptom: no symbols appear on the console when typing.

Possible cause: console send/receive mode not set; console not connected to computer's console jack; display brightness set too low; pin 20 of cable connecting console to computer (DTR line, see Appendix C) not connected.

Possibel cure: set send/receive mode on console; check cables and plugs; adjust brightness.

6. Symptom: operating system prompt not displayed after RESET button is entered.

Possible cause: operating system not successfully loaded; incorrect version of the operating system for your machine; operating system program not found on disk A; system bootstrap program problem.

Possible cure: press RESET button again; insert a known good system disk in drive A; perform FLPYTEST. If one disk works but another doesn't, perform SYSGEN operation, copying from good disk to bad disk.

NOTE: all users of ACS8000 systems with multi user operating systems (MP/M and AMEX) swap the failing terminal to another memory bank. If the terminal still fails the error is probably in the terminal. If the terminal operates correctly then the error is in the CPU. Proceed to the Memory Testing Section to determine if the problem is in the memory.

Memory Or Disk Drive Problems

7. Symptom: miscellaneous errors occur during execution of programs.

Possible causes: bad memory circuit chip; bad disk.

Possible cure: perform MEMTEST. If bad memory chip is found contact ALTOS. Perform FLPYTEST and HARDTEST if a Winchester disk is in the system; if bad disk is detected, replace with good disk, if problem continues, contact ALTOS.

8. Symptom: unable to load and execute programs.

See symptom number 7.

9. Symptom: in a multi-user system one user does not function.

See symptom number 7.

Permanent Disk Errors

9. Symptom: the operating system informs the user that a permanent disk error has occurred on either the floppy disk or Winchester hard disk.

Possible causes: most common is faulty disk media when problem occurs on floppy disks. On Winchester disks the cause may be either hardware or media.

Possible cures: the key factor is to save the disk files which can still be read on the disk or diskette. Use PIP to copy off all files which are still readable prior to any diagnostic action. Use FLPYTEST if problem is on a floppy disk to insure that it is a media problem, rather than a disk drive malfunction. On the Winchester hard disk use HARDTEST to insure that the testing program finds the same disk area in error. Then use HARDTEST to assign an alternate sector to replace the problem area.

Printer problems

10. Symptom: unable to print on printer.

Possible causes: defective printer cable; incompatible wiring between printer and computer; incomplete setup of either printer or computer.

Possible cures: check all interconnecting wiring; ensure that power is on to printer; perform printer SETUP.

F. MEMORY TESTING

This test writes data into each location of the computer memory and rereads the data, checking the data read against the data written. This ensures that each memory cell is good. If a bad cell is encountered, the test provides information as to which chip contains the bad storage cell.

The MEMTEST diagnostic performs three series of memory tests: (1) tests for all good cells, (2) tests for crossed or missed addresses and (3) tests for each chips output drive ability.

The procedure for executing a memory test is as follows:

1. Invoke the Diagnostic Operating System by placing the Diagnostic Disk into Drive A and pressing RESET.
2. Type "MEMTEST <cr>" on the keyboard.
3. The console will display:

....ALTOS MEMORY TEST....
VALID TEST MEMORY RANGE (HEX) 0000 -F8FF

This is the range of memory which can be tested utilizing MEMTEST.

MEMORY BANK(S) (0-3)?

The query "MEMORY BANK(S) (0-3)?" is displayed only for multi-system users and single system users with 64K of memory installed. The user responds with a memory bank to be tested. This query is repeated until the user responds with a blank.

4. The next prompt is "STARTING ADDRESS (HEX)"...the user responds with the starting address in the specified memory banks at which memory testing is to begin.
5. Next the user is queried with "TEST LENGTH (HEX)." The user responds with the range of the test in bytes.

The MEMTEST program resides in the highest part of the memory banks for systems built on the 8200 chassis and those 8000 and 8100 chassis with a DMA installed. For 8000 and 8100 chassis without a DMA, the MEMTEST program resides in low memory. The user may not specify that this memory be tested. The range of allowable responses is listed below for various memory size configurations.

MEMORY RANGE	STARTING ADDRESS	ENDING ADDRESS	LENGTH AVOIDING MEMTEST
0-16K	0000	3FFF	2300
16K-32K	4000	7FFF	6300
32K-48K	8000	BFFF	A300
48K-64K	C000	FFFF	E300

The LENGTH AVOIDING MEMTEST value is the maximum test length which can be specified which will test from the beginning of memory (location 0000 HEX) to the beginning of MEMTEST for various size memory configurations.

6. The console will begin displaying a slowly printing character string ".,;!" which will repeat across the screen. Eight repetitions of this pattern constitute a pass which indicates that the memory specified has been fully tested once.
7. Allow the test to run for at least one full pass.
8. If an error is encountered in the memory test a line displaying information on the error will be printed on the screen.
9. When a pass has been completed pressing "S" will cause the results to be displayed. Pressing "R" will restart the test. The user presses RESET on the ACS8000 computer to return to the diagnostic operating system.
10. Sample output is shown below with the assumption that the user had entered "01" in response to the number of banks to be tested query, entered a starting value of 0000 and a length of E300H.

SAMPLE OUTPUT OF MEMTEST DIAGNOSTIC

```
COMPARE ERROR—BANK 01 ADR: 8C82 WRITTEN 01010101 READ
01011101 PASSES 0001 ERRORS 0000 START 0000 LENGTH E300
BANK 00      D7 D6 D5 D4 D3 D2 D1 D0
0000-3FFF    00 00 00 00 00 00 00 00
4000-7FFF    00 00 00 00 00 00 00 00
8000-BFFF    00 00 00 00 00 00 00 00
C000-FFFF    00 00 00 00 00 00 00 00
PASSES 0001 ERRORS 0001 START 0000 LENGTH E300
BANK         D7 D6 D5 D4 D3 D2 D1 D0
0000-3FFF    00 00 00 00 00 00 00 00
4000-7FFF    00 00 00 00 00 00 00 00
8000-BFFF    00 00 00 00 01 00 00 00
C000-FFFF    00 00 00 00 00 00 00 00
```

In this example there are no errors in bank 0 of memory. This is shown by the 0 ERRORS indication in each of the memory RANGE's tested. There is one ERROR in bank 01.

Each memory chip in the ACS8000 holds 16K bits of information. The physical connection of memory chips is made such that eight memory chips form a 16K byte block of memory. Each range represents the testing of one 16K byte block of memory. Thus for a single user system consisting of 32K bytes of memory there would be 16 memory chips organized in two 16K blocks. Figure 6 illustrates the memory chip locations for single user systems.

Each RANGE tested by MEMTEST represents the testing of eight memory chips.

In a multi-user system, memory is divided into two types. A 16K byte block of memory is utilized by the operating system.

Each user in the system has a BANK of 48K bytes of memory exclusively for his use. This memory has addresses from 0000H to BFFFH. Thus, for a two user system there are two BANKS of user memory. These BANKS are numbered 0 and 1. Figure 8 shows the location of memory banks in multi-user ACS8000 systems.

The system memory resides in memory range C000 to FFFF in hexadecimal notation. This memory is used by each user within the system and for each user the system memory resides in addresses C000H to FFFFH.

11. Determining the failing memory chip proceeds as follows. On the display the error resides in one of eight columns which are labeled from D0 to D7. This

indicates the failing bit and will be used to identify the failing memory chip. In our example, the failure was in D3.

The eight bits which constitute a byte are numbered from 0 to 7 going from right to left.

In this case bit 3 differs between what was written and what was read.

To determine which individual memory chip failed it is first necessary to establish the chips which actually constitute the memory range in error. For single user systems this is straightforward, as the memory is shown in Figure 6 with the ranges labeled.

The multi-system user (chassis 8200) uses MEMTEST to, in effect, map the failing memory into the form shown in Figure 6. The System Memory contained in Circuit Chips 1H-8H (as shown in Figure 8) represents the memory range C000-FFFF. So these chips correspond to Column 4 of Figure 6.

The following table identifies the memory chip locations based on the Bank and address range for ACS8000 systems.

ACS8000 SYSTEM	ADDRESS RANGE CHIP LOCATIONS 0000-3FFF	4000-7FFF	8000-BFFF	C000-FFFF
8000/8100 Chassis	1A-8A	1B-8B	1C-8C	1D-8D
8200 Chassis				
Bank 0	1E-8E	1F-8F	1G-8G	1H-8H
Bank 1	1K-8K	1L-8L	1M-8M	1H-8H
Bank 2	1P-8P	1R-8R	1S-8S	1H-8H
Bank 3	1A-8A	1B-8B	1C-8C	1H-8H

Next look at the MEMTEST output and find the BANK in which the errors are occurring. From the table above, memory errors in Bank 1 within the error range 8000-BFFF are caused by the memory chips located at 1M-8M.

As shown in Figure 8 the D3 bit error maps to the M5 memory chip in this example. This is the memory chip in error and its replacement will solve the memory problem diagnosed by MEMTEST.

G. DISKETTE DRIVE TESTING—FLPYTEST

This test exercises the ALTOS disk drives to ensure both data integrity and timing integrity... it can be used to test both diskettes and disk drives. If the disk drives are tested and show no errors, then a diskette which encounters read or write errors can be assumed to have bad sectors.

1. Floppy Disk Status Codes

When a permanent error is detected on disk, the operating system will display the following message:

PERMANENT DISK ERROR, TRACK tt, SECTOR ss, STATUS xx

where tt and ss are the track and sector in error and status xx indicates the nature of the error as defined in the table below.

The status code returned by the operating system reflects the cause of the error and is dependent upon the operation being performed. Thus a Seek Error and Record Not Found both have Error Code '10' depending upon which operation was being performed. The Status Codes returned are listed below:

Bit	All Type 1 Commands	Read Address	Read	Write
s7	Not ready	Not ready	Not ready	Not ready
s6	Write prot	0	Record type	Write prot
s5	Head loaded	0	Record type	Write fault
s4	Seek error	ID not fnd	Rec not fnd	Rec not fnd
s3	CRC error	CRC error	CRC error	CRC error
s2	Track 0	Lost data	Lost data	Lost data
s1	Index	DRQ	DRQ	DRQ
s0	Busy	Busy	Busy	Busy

The format of the Status Register is shown below.

Bits							
7	6	5	4	3	2	1	0
s7	s6	s5	s4	s3	s2	s1	s0

The system displays the contents of the status register in hexadecimal format. The meaning of these errors and their most common cause are described below:

SEEK ERROR (Code '10') indicates a hardware error. Contact the ALTOS maintenance facility for further instructions.

CRC ERROR—CYCLIC REDUNDANCY CHECK ERROR (Code '08') is an indication that the data read back from the disk is in error. Two CRC bytes are appended to both the Sector ID and the data field itself during a WRITE operation to the Disk. This is done by a circuit in the floppy disk controller. When data is read back from the disk this same CRC circuit checks all the data (including the appended bytes) and determines whether the data has been read correctly. If the data is in error, the CRC ERROR will be set true. This same type of check is made on the Sector ID and a READ or WRITE of a sector will not occur if the ID shows a CRC ERROR. A CRC error generally indicates a media error.

RECORD NOT FOUND (Code '10') is an indication that the specified ID was not found on the addressed Track during a READ or WRITE operation. The disk hardware makes a check of the specified track and sector and if there is no match the RECORD NOT FOUND flag is set true and the operation is aborted. This error can be caused by either a media problem or disk drive hardware malfunction. A RECORD NOT FOUND indication may mean that the disk drive hardware did not step the read/write heads to the proper Track, or could mean that the address written on the disk drive was not correct.

2. Running FLYPTEST Diagnostic

The FLPYTEST diagnostic tests all aspects of the operation of the floppy disk or disks attached to the system. In order to insure that FLPYTEST can discriminate between media problems with the diskette and hardware problems within the disk drive, floppy diskettes known to be free of errors must be used in this test. In practice, this means that the scratch disks utilized in the test should not be diskettes which have a history of permanent disk errors.

1. The Diagnostic Operating System should be brought up by placing the Diagnostic Diskette into Drive A and pressing RESET.
2. Enter the command FLPYTEST <cr>.
3. The system will direct you to insert scratch diskettes, then type <cr>. AT THIS TIME REMOVE THE DISK(S) YOU ARE USING FROM THE DRIVE(S), AND INSERT BLANK DISKS OR DISKS WHICH DO NOT CONTAIN ANY FILES YOU WANT SAVED. THE FOLLOWING STEPS WILL COMPLETELY ERASE THE DISKS.
4. When you have inserted "scratch" disks, type a <cr>.
5. The system will ask you to enter 'S' for single-density or 'D' for double-density. The diskettes used in the testing process must have been previously formatted for operation in the density which is specified. If in doubt utilize the FLPYFORM utility to format the diskettes prior to testing.
6. To ensure compatability between the drives, the user is instructed to swap the disks at the midpoint of the test.
7. At the end of the test, the user will be informed that the test has completed. The user will then be instructed to replace a system disk in drive A and type <cr>.
8. The test takes about 5 minutes to run. Wait until it is complete. Several seconds after the test begins, the disk will begin making some unusual noises. This is quite normal, as the system is testing the sector seek and home mechanisms.
9. Any errors which are encountered during the test are printed at the terminal. THIS TEST SHOULD RUN ERROR FREE GIVEN DISKETTES WHICH HAVE GOOD MEDIA. If an error occurs, run the test again with different scratch diskettes. If the error still occurs than contact ALTOS Maintenance for instructions.

H. HARD DISK TESTING—HARDTEST

Before utilizing HARDTEST the user must backup all readable files on the Winchester disk. SEVERAL OF THE HARDTEST TESTS ARE DESTRUCTIVE TESTS. THEY ERASE USER DATA FILES. USE HARDTEST ONLY AFTER BACKING UP ALL USER FILES.

Errors encountered with the Winchester hard disk are generally either (1) media problems or (2) Winchester drive electronic or drive motor problems. Problems with the disk motors or electronics require repair at the ALTOS Maintenance facility. The descriptions below will allow the user to determine the nature of the problem and to take appropriate action for field repair when practical.

Altos supplies a Winchester hard disk diagnostic program named HARDTEST as part of the Diagnostic Software System. This diagnostic utility provides functions for both testing of the hard disk to determine if errors exist, and correction of media errors in the field.

The HARDTEST utility must be used with great care as several of its tests write to the hard disk and erase user files stored there.

1. Hard Disk Error Indications

There are two classes of hard disk error indications. The first is when the disk cannot be accessed or an I/O operation fails to complete with no indication of error. An example of such an error indication is if a user did a drive switch to a hard disk drive (e.g., entered E:) and no response was received back from the hard disk. If this type of error is indicated, the usual problem is with the disk drive hardware. See Section 3—Hard Disk Hardware Problems for details on further diagnosis.

The second class of hard disk error indications is when an operating system error message is displayed on the screen. The error message is of the format:

PERMANENT DISK ERROR TRACK xx HEAD yy SECTOR zz STATUS ss

This message indicates that an error of the type specified by the status code has occurred at the location specified by the track, head and sector address. When an error occurs on the hard disk the operating system re-tries the failing operation three times. If the fault goes away on any of these three tries a "Soft Error" is said to have occurred and the operation requested is completed for the user. If after three re-tries the requested operation cannot be completed, a "permanent error" has occurred and the requesting program is passed the appropriate Status code indicating the nature of the error and the error message is displayed for the user. The user's program is then responsible for taking appropriate action. In the case of a permanent error on hard disk the most common action is to terminate the program.

When a permanent disk error occurs the user must save the address and Status Code of the error. The meaning of the Status Codes are described below with instructions on where to go to fix the problem.

2. Permanent Error Status Codes

The Winchester hard disk returns a Status Code at the completion of every operation requested by a program. The status code is then utilized by the calling program to determine the status of the requested operation.

The Status Codes are returned in a Status Byte by the hard disk in the following format:

BIT 7 READY
BIT 6 WRITE FAULT
BIT 5 (UNASSIGNED)
BIT 4 CRC ERROR
BIT 3 RECORD NOT FOUND
BIT 2 BAD SECTOR
BIT 1 TASK COMPLETE
BIT 0 BUSY

The format of the Status Register is shown below.

Bits							
7	6	5	4	3	2	1	0
s7	s6	s5	s4	s3	s2	s1	s0

When a permanent error is detected on disk, the operating system will display the following message:

PERMANENT DISK ERROR, TRACK tt, HEAD hh, SECTOR ss, STATUS xx

where tt, hh, and ss are the track, head and sector in error and status xx indicates the nature of the error as defined in the above table.

The Status Code returned by the drive is the HEXADECIMAL representation of the hard disk Status Byte. Depending upon the type of operation requested by the user, more than one indicator may be set within the Status Byte. For example, if the bit system successfully completed a Read operation, the Status Code would indicate '82.' The hard disk has set two status indicators... '80' indicating READY and '02' indicating TASK COMPLETE. The user should break down the Status Code into its component parts.

The meaning of each Status Bit is defined below with some indication as to the possible cause of the problem.

READY (Code '80') indicates the drive is ready to be accessed. When initially powered on, the drive requires approximately 1.5 minutes to reach speed and become ready. During this time READ's, WRITE's and head motion are prohibited by the drive itself. Any such Command will wait until the Ready condition is true before commencing.

WRITE FAULT (Code '40') indicates a FAULT condition at the write heads, and must be cleared by a FAULT CLEAR Command to the drive before the drive can be written to. When this error occurs the disk drive is usually experiencing hardware problems. Go to the Hard Disk Hardware Diagnostic Procedure section of this manual.

CRC ERROR — CYCLIC REDUNDANCY CHECK ERROR (Code '10') is an indication that the data read back from the disk is in error. Two CRC bytes are appended to both the Sector ID and the data field itself during a WRITE operation to the disk. This is done by a circuit in the hard disk controller. When data is read back from the disk this same CRC circuit checks all the data (including the appended bytes) and determines whether the data has been read correctly. If the data is in error, the CRC ERROR will be set true. This same type of check is made on the Sector ID and a READ or WRITE of a sector will not occur if the ID shows a CRC ERROR. A CRC error generally indicates a media error. Go to the Media Error Diagnostic Procedure section of this manual.

RECORD NOT FOUND (Code '08') is an indication that the specified ID was not found on the addressed track during a READ or WRITE SECTOR operation. The disk hardware makes a check of the specified cylinder, head, and sector and if there is no match, the RECORD NOT FOUND flag is set true and the operation aborted. This error can be caused by either a media problem or disk drive hardware malfunction. A RECORD NOT FOUND indication may mean that the disk drive hardware did not step the read/write heads to the proper track, or could mean that the address written on the disk drive was not correct. Go to the Media Error Diagnostic Procedure section of this manual.

BAD SECTOR (Code '04') is an indication that the addressed sector has a media defect that makes the sector unusable. Media defects at the time of manufacture are identified by Shugart through an analog scan of the disk. Before shipment from the ALTOS factory these bad sectors are labeled in their Sector ID as bad sectors. If a READ or WRITE operation to such a sector is attempted, the Bad Sector Flag will be set and the operation aborted. This problem is usually a media problem. Go to the Media Error Diagnostic Procedure section of this manual.

TASK COMPLETE (Code '02') is an indication to the operating system that the requested command has been completed and (with the exception of the 20MS delay required following a HOME or SEEK) the system is ready for the next operation. The RESET command does not result in a TASK COMPLETE. Commands RECAL, SEEK, FORMAT, WRITE, READ DATA and READ ID all generate the TASK COMPLETE indication. The TASK COMPLETE indication is cleared upon the issuance of another command. This Status Code is not an error indication.

BUSY (Code '01') is an indication that the system is in the process of carrying out a command. This Status Code is not an error indication.

3. The HARDTEST Diagnostic Utility

The HARDTEST utility allows the user to diagnose hard disk errors. This utility must be used with great care as several of the HARDTEST functions will destroy user data on the disk.

A. Invoking And Utilizing HARDTEST

Utilization of HARDTEST requires the entire system in multi-user environments. Prior to beginning testing insure all users are off the system. Insure that all files on the hard disk have been backed up.

The HARDTEST utility resides on the ALTOS Diagnostic Disk and will run only under the Diagnostic Operating system. To utilize HARDTEST the user should insert the Diagnostic Disk into the ACS8000 and boot the Diagnostic System. A menu of diagnostic tests is displayed and the user enters HARDTEST.

HARDTEST then displays a menu of functions and the user selects the desired operation.

If both a Primary and Alternate disk are attached to the ACS8000, HARDTEST will query the user as to which drive is to be tested. Drive 1 is the Primary Drive while drive 2 is the Additional disk drive.

If the selected HARDTEST operation will destroy user data on the disk, the following message is displayed:

** THIS TEST WILL ERASE FILES ON THE HARD DISK ** Do you want to continue y or n ?

If the user enters "y" the test continues. Any other character causes the HARDTEST master menu to be displayed.

Several HARDTEST functions request additional user inputs such as disk addresses and flag bytes. HARDTEST treats such inputs as decimal values unless the input utilizes the Z-80 standard for specifying a Hexidecimal value. This standard is the Hex value followed by the letter "H." For example, to specify the Flag Byte to contain the bit value '11111111' the user input is 'FFH.'

The following are valid ranges of responses to HARDTEST requests for disk addresses:

Cylinder Number:	00-201	(000H-0C8H)	
Head Number:	00-03	(000H-003H)	All Models
	04-07	(004H-007H)	Model 4008 Only
Sector Number:	00-15	(000H-00FH)	

For those HARDTEST functions that "Continuously" operate, the user may terminate the test by hitting the "ESC" (Escape) key on the terminal.

HARDTEST formats tables of output for Test 11. The utility is programmed to display this data in full screen mode on ADM-3A terminals or equivalent. For other terminals the data will be output a line at a time. To make this determination the user is queried whether the terminal being utilized is an ADM-3A equivalent.

B. HARDTEST Functions

Function 1: Format Disk Drive

This function formats each sector on the disk drive. The Flag Byte is set to 000H and the appropriate cylinder number, sector number and drive/head number (disk address) is written for each sector. During this operation, CRC bytes for the Sector ID are generated and written to the disk. This function erases Flag Byte indications of sectors in error and any pointers to alternate sectors. None of the data portion of the disk is changed by this operation. Sectors which previously had been marked as bad sectors will be marked as valid. Unless these bad sectors are re-marked as bad (i.e., utilizing HARDTEST Test 10) programs may write on a bad sector and be unable to access the data at a later time.

WARNING: THIS HARDTEST FUNCTION CHANGES DATA ON THE HARD DISK AND MAY CAUSE THE LOSS OF USER DATA

Function 2: Continuously Format One Specific Sector

This function formats the user specified sector on the disk drive. The Flag Byte is set to 000H and the appropriate cylinder number, sector number and drive/head number (disk address) is written for the specified sector. During this operation CRC bytes for the Sector ID are generated and written to the disk. This function erases Flag Byte indications of the specified sector and any pointers to alternate sectors. No data is changed by this operation. Sectors which previously had been marked as bad sectors will be marked as valid. Unless these bad sectors are re-marked as bad (i.e., utilizing HARDTEST Test 10) programs may write on a bad sector and be unable to access the data at a later time.

This function is terminated by hitting the ESCAPE key.

WARNING: THIS HARDTEST FUNCTION CHANGES DATA ON THE HARD DISK AND MAY CAUSE THE LOSS OF USER DATA

Function 3: Seek Test From Cylinder 000 Through 201

This text exercises the hard disk stepping motors in moving the head from the home position to each cylinder, then back to the home position and so forth. This test does not read or write either the Sector ID or data so no errors are expected from the Status Code. If any errors are encountered in this process they will be displayed on the user terminal as they are encountered.

Function 4: Seek Test Between User Specified Cylinders

This test exercises the hard disk stepping motors in moving the head between cylinders specified by the user. This test does not read or write either the Sector ID or data so no errors are expected from the Status Code. If any errors are encountered in this process they will be displayed on the user terminal as they are encountered. This test is utilized if problems have been identified in seeking to specific cylinders.

Function: 5: Continuously Read One Specific Address

The user specifies a specific Sector ID to be displayed by HARDTEST. The output is displayed at the user terminal as 12 hexadecimal digits. The first two bytes are the Flag Bytes, the next two bytes are the cylinder, the next two bytes are the drive/head bytes, the next two bytes are the sector number, and the last four bytes are CRC bytes. The meaning of each of these values is detailed in Chapter 4-F "Hard Disk Programming" of the ALTOS Hardware Manual.

If an error is encountered during the read operation, it is displayed at the user terminal as a permanent I/O error message. This test is terminated by hitting the ESCAPE key at the terminal.

Function: 6 Continuously Write One Specific Sector

The user specifies a specific sector address and the character to be written to the sector. HARDTEST then writes the user specified character to the sector. If an error is encountered during the write operation it is displayed at the user terminal. This test is terminated by hitting the ESCAPE key at the terminal.

WARNING: THIS HARDTEST FUNCTION CHANGES DATA ON THE HARD DISK AND MAY CAUSE THE LOSS OF USER DATA

Function 7: Continuously Read One Specific Sector

The user specifies a specific sector address and character to be compared. HARDTEST then reads the user specified sector continuously, comparing the data found with the specified character. If an error is encountered during the read operation, it is displayed at the user terminal. This test is terminated by hitting the ESCAPE key at the terminal.

Function 8: Fully Write Every Track On Disk

The user specifies a character to be written on every track on the hard disk. If any errors occur during this operation they are displayed on the user terminal. This function is utilized in the initialization of the disk. The propagation of the character 'E5H' indicates to the CP/M, MP/M and AMEX operating systems that the disk directory is empty.

HARDTEST Test 11 will also write 'E5H' characters to the disk. If it is necessary to 'erase' a hard disk utilize Test 11 rather than this Test.

WARNING: THIS HARDTEST FUNCTION CHANGES DATA ON THE HARD DISK AND MAY CAUSE THE LOSS OF USER DATA

Function 9: Fully Read Every Track On Disk

Every Track on the hard disk is read testing for

correct addressing and CRC validation. This test compares a user input single character with each character on the disk. This test is utilized only when the entire disk is expected to contain the same character and the user is looking for other characters. Errors are displayed on the screen as they are encountered.

Function 10: Set Flag Byte For A Specific Sector

The user specifies a disk address in the format given by the Shugart error scan, (track, head, byte count and error bits) and Flag Byte to be written to this sector. A Flag Byte of other than '000H' will cause a BAD SECTOR error condition to be raised whenever an attempt is made to read or write that Sector. This function is utilized to set alternate Sector flags and to mark those areas where the media is known to be bad. This function is utilized in the hard disk initialization process described in the ACS8000 HARDWARE MANUAL.

WARNING: THIS HARDTEST FUNCTION CHANGES DATA ON THE HARD DISK AND MAY CAUSE THE LOSS OF USER DATA

Function 11: Hard Disk Read/Write Error Test

This test provides two functions. First, it fully tests all aspects of the disk by writing and reading a variety of data patterns to the entire disk. This test is the most thorough disk test and finds most disk media or electronic problems. Error display is made on the terminal as each error is encountered and a tabular error recap is printed at the end of each pass. For those users with an ADM3A compatible terminal the recap error display is displayed as the testing proceeds. At the end of the testing (signified by the user entering ESC) the detailed error information (if any) may be printed from a disk file which stores these errors. The user is queried if this error file should be printed. This test should be allowed to run at least 8 passes.

When any kind of hard error is encountered on the disk, Test 11 automatically sets the Flay Byte to '11H' (indicating a bad sector) for the sector in error. If it is later necessary to determine which, if any, of the sectors on the disk have been marked bad then utilize Test 14 for a listing of the sectors. If Test 14 shows errors in any sectors other than those found by Test 11 then other problems with the hard disk exist. In this event call the ALTOS Maintenance Facility for further guidance.

When the diagnositic phase has been completed by the user hitting the ESCAPE key at the terminal, the user is then given the opportunity to allocate dummy files onto those areas of the disk which have been found to contain permanent errors.

WARNING: THIS HARDTEST FUNCTION CHANGES DATA ON THE HARD DISK AND MAY CAUSE THE LOSS OF USER DATA

Function 12: Set Flag Byte For A Specific Sector

The user specifies a sector address and Flag Byte to the written to this sector. A Flag Byte of other than '000H' will cause a BAD SECTOR error condition to be raised whenever an attempt is made to read or write that sector. This function is utilized to set alternate sector flags and to mark those areas where the media is known to be bad. This function is utilized in the hard disk initialization process described in the ACS8000 HARDWARE MANUAL.

WARNING: THIS HARDTEST FUNCTION CHANGES DATA ON THE HARD DISK AND MAY CAUSE THE LOSS OF USER DATA

Function 13: CRC Check For Every Sector On Disk

This test reads the Sector ID and data tracts for every sector on the disk and insures that the CRC bytes on the disk are correct for the data read. Data display is tabular.

Function 14: Verify Addresses For All Sectors On Disk

This test reads the Sector ID for each sector on disk to insure that the drive/head and sector values are correct. Data display is tabular.

4. Hardware Problem Diagnosis

Whenever error symptoms point to a non-media problem with the Winchester hard disk, the user should contact the ALTOS Maintenance facility. An ALTOS technician will work with the user to validate the symptoms (often utilizing the HARDTEST utility) and will give final instructions on how to solve the problem.

If the user has two Winchester disks attached to the system then the system may be re-configured to take advantage of the remaining hard disk. If the failing disk is the Primary hard disk then it will be necessary for the user to (1) backup the files on the Additional hard disk, (2) repin the Additional hard disk to be the Primary (discussed in detail in the ACS8000 HARDWARE MANUAL), (3) reformat the hard disk to be the Primary using HARDTEST and re-assign bad sectors (see Section 6 of this manual), (4) repin the System Description Block if the system is built on an 8200 Chassis (discussed in detail in the ACS8000 HARDWARE MANUAL), and finally (5) plug the drive into the Additional Hard Disk connector and restore the files.

5. Media Problem Diagnosis

Whenever a permanent disk error message is encountered, the user must gather all of the indicative information displayed in the message including the track, head, sector and Status Code. All of this information is necessary to effect a solution to the problem.

When a permanent disk error occurs there are three possible causes of the error. First, there may be a portion of the media on the disk drive which has gone bad. Second, the disk drive electronics or head positioning motors may be bad. Third, the hard disk controller circuitry or other CPU circuitry may be bad.

A significant clue in determining which of these

problems is actually occurring is the frequency and distribution of hard disk errors. If a media oriented error Status Code (e.g., RECORD NOT FOUND) occurs at the same address every time that portion of the hard disk is accessed, it is most likely caused by a media failure. If, on the other hand, the RECORD NOT FOUND error begins to occur with great frequency at many disk addresses it is likely to be a drive hardware problem.

The design of the hard disk and its maintenance history in the field indicates that the incidence of media failures on many locations of the disk simultaneously does not occur. If many errors occur in a variety of disk addresses the user should assume that there is a hardware problem and contact the ALTOS maintenance facility for instructions.

The most common error codes which may signify media failures are listed below with instructions on how to address the problem.

CRC ERROR—CODE '10'

The hard disk control circuitry in the ACS8000 CPU generates two bytes of Cyclical Redundancy Check data for both the Sector ID and the users data when the data is written. When data is read the CRC bytes are compared to insure that the data has been properly retrieved. This error code indicates that a CRC error on a read operation has occurred on either the Sector ID or the data. Since the CRC data is generated and compared by circuitry external to the hard disk, in multi-user system the user receiving the CRC error should be certain that other users on the system have not been receiving CRC errors indicating the failure may be in the hard disk controller chip. If multiple CRC errors have been encountered call ALTOS for instructions.

The procedure to follow may allow recovery of the users file which resides at the failed location if the CRC error is in the Sector ID. Invoke HARDTEST 2 to format the failed sector.

Rerun the failing program to determine if this has solved the problem. If the failure remains then the file is not recoverable. The user may now either (1) mark the failing sector unusable, or (2) re-write the failing sector and make it available for later use by the system.

To mark the failing sector go to the procedure outlined in Section H.6 of this manual.

To rewrite the failing sector utilize HARDTEST 6 to write to the failing sector. The user should specify the character 'E5H' to be written. This character signifies an empty sector to the CP/M, MP/M and AMEX operating systems.

HARDTEST 7 should then be utilized to read the failing sector with character 'E5H' specified. If the CRC error shows up in this test then you must mark the sector lost as described in Section H.6 of this manual.

RECORD NOT FOUND—CODE '08'

This error indicates that no valid Sector ID could be found for the requested disk address. This could be caused by the disk drive motors placing the head at an incorrect location. This is rarely the case since when this error occurs the heads are brought to the home position and then the seek is re-tried. If a large number of RECORD NOT FOUND errors occurs on many disk sectors this can indicate a hardware problem. If this occurs contact ALTOS maintenance for assistance.

NOTE: If a disk drive which has been formatted as a Primary drive is plugged into the Additional drive connector (and vice versa) RECORD NOT FOUND errors will occur on every operation. This ocurs since the drive number is a part of the Sector ID and the disk controller circuitry in the CPU sets the drive number based on connection to the Primary or Additional disk. If this occurs see Section H.6 of this manual on reformatting the disk.

BAD SECTOR—CODE '04'

This error occurs when the Flag Bytes in the Sector ID are not 000H. The most usual cause of this problem is if a sector has been marked bad using HARDTEST 10 or HARDTEST 12 and no dummy file has been allocated over this bad spot utilizing HARDTEST 11. Utilize HARDTEST 11 to mark all sectors with bad Flag Bytes unavailable for use by the operating system.

6. Assigning Alternate Sectors

The Shugart hard disks supplied by ALTOS are the highest quality available. Even with these disks, however, there may be areas of the disk media which are not usable. The Winchester hard disks provide alternate sectors which may be assigned by the user to make the areas of bad media transparent to the user.

When the hard disk is shipped from the ALTOS factory the process of initialization, as described above, and the process of assignment of alternate sectors has already taken place. In the event that the disk must be re-initialized or that a Sector of the media goes bad in the field it is necessary to assign an alternate sector to replace the media in error. If the user simply wishes to mark an additional sector as bad go directly to step six of the process outlined below.

This assignment procedure is a two step process. First, the Sector ID is flagged using the HARDTEST facility indicating the sector is unusable. Second, a dummy file is assigned to occupy the bad sector so as to minimize the overhead caused by files being allocated on this spot and the resulting overhead in accessing the alternate sector.

The manufacturer of the Winchester hard disk (Shugart) provides ALTOS with error maps on their hard disk drives (SA4004 and SA4008). These error maps give the location of all the defective areas on the disks. By using this map to flag bad sectors, the user will be able to identify bad sectors and reduce the number of soft errors. The Shugart error map is based on an alalog scan of each disk and picks out marginally bad areas which might otherwise result in soft (recoverable) errors.

The Shugart error maps are defined in terms of the cylinder, head, first byte in error (relative to the index) and length of the defect (bits).

The final step in the assignment procedure is to allocate dummy files onto those tracks which are known to be in error. This prevents the operating system from allocating its own user data files onto bad media.

THE HARD DISK IS SHIPPED FROM ALTOS ALREADY FORMATTED WITH ALL BAD SECTORS MARKED AND DUMMY FILES ALLOCATED. THE DISK DOES NOT REQUIRE FURTHER FORMATTING PRIOR TO INSTALLATION USAGE.

The specific procedure for assigning alternate sectors is described below. In Figure 1 (which follows this description) an actual example of the calculations is given... the user should follow that example as the process is described below.

1. A copy of the Shugart Error Map is located in a pouch on the bottom side of the disk drive (note that you must remove the cover from the disk chassis to gain access to this Error Map). The user may determine the actual sector address from the Shugart error map or may utilize the HARDTEST utility function which accepts this location information. If the user does not wish to convert the Shugart notation then proceed to step 6 of this procedure.

2. The "ERR(BITS)" value is the number of bits which were found to be in error during the analog scan. It is first necessary to convert the number of BITS into the number of BYTES (8 bits constitute a byte). This is done by dividing the ERR(BITS) value by 8. If there is a remainder other than 0 add one to the ERR(BYTES) value. The results of this calculation are shown in Figure 4-1.

3. The LAST BYTE value is then determined by adding the ERR(BYTES) value to the BYTE CT value which represents the first byte in error as measured from the hardware index point.

4. The BYTE CT and LAST BYTE values are then converted to sector addresses through a table lookup procedure. Using the ERROR MAP TABLE below determine if the BYTE CT value falls within any of the ranges specified in the TOTAL BYTE RANGE column. If the BYTE CT does fall within the range then place the SECTOR NUMBER value in the FIRST SECTOR column. If the BYTE CT value does not fall within one of the specified values then place an "X" in the FIRST SECTOR column. Then determine if the LAST BYTE falls within the range and place its SECTOR NUMBER in the LAST SECTOR column, or an "X" if the value is not in any range. A portion of every track on the hard disk is not used for user data. This space is utilized for head settling and timing synchronization. The "X" indicates that the media in error resides in this unused space and there is no need for allocating a dummy file.

TOTAL BYTE RANGE	SECTOR NUMBER	ADDRESS BYTE RANGE
00000-01060	15	00000-00018
01125-02185	0	01125-01143
02250-03310	1	02250-02268
03375-04435	2	03375-03393
04500-05560	3	04500-04518
05625-06680	4	05625-05643
06750-07810	5	06750-06768
07875-08935	6	07875-07893
09000-10060	7	09000-09018
10125-11185	8	10125-10143
11250-12310	9	11250-11268
12375-13430	10	12375-12393
13500-14560	11	13500-13518
14625-15680	12	14625-14643
15750-16810	13	15750-15768
16875-17935	14	16875-16893

5. The user can now make a table of sectors which are in error and require flagging. This is accomplished as follows:

A. If the FIRST SECTOR and LAST SECTOR values are both "X" then ignore this error condition.

B. If either the FIRST SECTOR or LAST SECTOR contains an "X" then enter the TRK, HD and SECTOR value for the non "X" value into the table.

C. If the FIRST SECTOR and LAST SECTOR contain the same Sector value then enter the TRK, HD and FIRST SECTOR value into the table.

D. If the LAST SECTOR value is more than 1 greater than the FIRST SECTOR value then enter the TRK, HD and SECTOR values ranging from the FIRST SECTOR to the LAST SECTOR (e.g., if FIRST SECTOR equals 4 and LAST SECTOR equals 6 then three entries are made in the table with the same TRK and HD values and SECTOR values of 4, 5 and 6).

E. If the TRK, HD and SECTOR values already appear in the table then do not re-enter these values.

6. Utilize the ALTOS HARDTEST utility Function 10 or Function 12 to flag each of the Sectors specified in the table. Function 12 will query the user for the TRACK, HEAD and SECTOR numbers, while Function 10 queries for track, head, byte count and error bits. The user should specify a Flag Byte of "011H." Upon completion of this function each sector address will be flagged as unusable.

7. Utilize HARDTEST Function 11 to automatically assign dummy disk files on those disk tracks which have been flagged with error flag 011H. When this function has been completed the disk will be ready for user utilization.

8. Run HARDTEST test 11 for eight passes to check that all the bad sectors have been flagged. There should be no hard "CRC errors," but there should be as many sectors with "bad sector" errors as there were sectors flagged. There may be some remaining errors due to flaws in the address or address sync space.

9. Keep the previous calculations along with the serial number of the disk drive for future reference.

Figure 1: Hard Disk Alternate Track Assignment

SHUGART ERROR MAP SA4000 MEDIA SCAN				USER COMPUTATIONS			
TRK	HD	BYTE CT	ERR (BITS)	ERR BYTES	LAST BYTE	FIRST SECTOR	LAST SECTOR
007	05	13039	23	3	13042	10	10
008	05	13036	19	3	13039	10	10(1)
		13041	12	2	13043	10	10(1)
184	07	05775	45	6	05881	X	X
186	07	08930	560	70	09490	6	7(2)

SECTOR FLAG TABLE

TRACK	HEAD	SECTOR
7	5	10
8	5	10(1)
186	7	6(2)
186	7	7(2)

NOTES:

(1) Errors have occurred on the same track, head and sector of the disk. It is only necessary to assign an alternate sector once. Notice that the Shugart Error Map does not duplicate the track and head numbers if they are the same.

(2) In this case the bits in error have spilled over onto two sectors. It is necessary to assign an alternate for both of the sectors in error.

I. PRINTER TESTING—PRNTEST

The diagnostic utility PRNTEST is supplied to print all standard characters on the printer attached to the printer port. Invoke PRNTEST by loading the Diagnostic System and entering PRNTEST.

1. The following characters will be displayed on the system printer.

```
!"#.$%'()*+,-./
0123456789:;<=>?
@ABCDEFGHIJKLMNO
PQRSTUVWXYZ[/]^_
` abcdefghijklmno
pqrstuvwxyz{|}~
```

Some of these characters may not be printed or may be printed as a different character than shown above depending upon the capabilities of the attached printer. For example, many printers cannot print lower case letters and will print these characters in upper case. In addition to printing the above characters the test will ring the bell on the printer if the printer has a bell.

If some portion of this test was successful then the problem is most likely with the printer.

The second step in the printer testing is to substitute another serial device for the printer to see if this device will operate properly. The console terminal is utilized for the purpose.

1. Load the Diagnostic Diskette into the ACS8000.
2. Press the RESET button on the computer.
3. Ensure that the terminal is configured with the SEND/RECEIVE (SR) mode or KEYBOARD SEND/RECEIVE (KSR) mode ON; the LOCAL mode OFF; PARITY OFF; and the baud rate at 9600.
4. Observe the Diagnostic System Prompt on the console display.
5. Disconnect the printer cable from the printer jack on the computer's rear panel.
6. Type the command:

   PRNTEST

7. Disconnect the panel console from the console jack on the computer's rear panel.
8. Change the console terminal's baud rate setting to the setting that you have set for your printer (using the SETUP program) or to 300 if you have not altered your system.
9. Plug the console terminal's cable into the printer jack. The PRNTEST character pattern should begin printing on the display. If so, the computer is operating correctly and the problem is with the printer.

If nothing is displayed or if random characters are displayed, move the console's baud rate selector switch through all of its positions. If one position is found at which the file is correctly displayed, note the switch setting at that point. The computer is outputing its data at this rate. Either change the printer to coincide with this rate, or alter your system (using SETUP) to communicate with your printer at the rate you desire.

On the RS232 port the Request To Send (Pin 4) and the Clear To Send (Pin 5) pins are not active. The Request To Send is wired back to Clear To Send without going to the connector pins. Call ALTOS for instructions on inserting jumpers to activate these lines (the holes for such pinning are provided on the chassis).

Appendix and Figures

Packed with Fresh Ideas

Appendices

A. Manual References 4-3
B. Z-80 Microprocessor OpCode List 4-4
C. ALTOS Interface Connector Wiring 4-6
D. Input/Output Port Assignments 4-7
E. Disk Controller Status 4-10
F. System Startup And Shutdown Checklist 4-12
G. Multi-User System Interrupt Priority 4-13
H. Circuit Chip Location Map 4-14
I. ACS8000 Models And Facilities 4-15
J. Operating Software Systems Requirements 4-16
K. 8200 Circuit Board System Description Block 4-17
L. Hard Disk Bad Sectors 4-19
M. Field Upgrading ACS8000/5 Systems 4-20

Figures

1. Front And Rear Panel—One Floppy Disk F-1A
2. Front And Rear Panel—Two Floppy Disks F-1B
3. Front And Rear Panel—Multi User Systems F-2
4. Disk Insertion F-3
5. General Microcomputer System Diagram F-4
6. ACS8000 Block Diagram F-5
7. Memory Chip Location Diagram F-6
8. Circuit Chip Location—Chassis 8000 ..... F-7A
9. Circuit Chip Location—Chassis 8100 ..... F-7B
10. Circuit Chip Location—Chassis 8200 ..... F-7C
11. Multi-User System Memory Locations F-8
12. Winchester Disk Setup F-9
13. Winchester Disk Connection F-10
14. Winchester Disk Address Pinning F-11

Appendix A: Manual References

ALTOS Publications:

ALTOS ACS8000 Hardware Manual
ALTOS Diagnostic System Manual
ALTOS Utility Software Manual
AMEX Operating Systems Software Manual

Zilog Publications:

Z80/Z80A CPU Technical Manual (03-0029-01)
Z80/Z80A CPU Product Specification Sheet (03-0027-01)
Z80/Z80A SIO Product Specification Sheet (03-0039-02)
Z80/Z80A PIO Product Specification Sheet (03-0030-01)
Z80/Z80A CTC Product Specification Sheet (03-0031-01)

Zilog, Inc., 10460 Bubb Road, Cupertino, Ca., 95014
(408) 446-4666

Digital Research Publications:

An Introduction to CP/M Features and Facilities
CP/M Assembler (ASM) User's Guide
CP/M Dynamic Debugging Tool (DDT) User's Guide
ED: A Context Editor for the CP/M Disk System User's Manual
CP/M Interface Guide
CP/M System Alteration Guide
CP/M TEX Text Formatter User's Guide
CP/M MAC Macro Assembler: Language Manual and Applications Guide
MP/M User's Guide

Digital Research, Box 579, Pacific Grove, Ca., 93950
(408) 649-3896

National Semiconductor Publications:

INS1771-1 Floppy Disk Formatter/Controller (Pub. no. 426305468-001)
Weissberger, Alan J. "Data Communications Handbook." 1977, Signetics Corporation, Sunnyvale, Ca.

Western Digital Corporation

FD1771 Floppy Disk Formatter Controller
FD1791 Floppy Disk Formatter Controller

Appendix B: Z-80 Microprocessor OpCode List

The list on the following pages gives the m cro call format for the CP/M MAC macro assembler and the corresponding ZILOG assembly language mnemonic codes. This list includes those operations which can be performed by the Z-80 microprocessor, but not by the 8080. They can be assembled using the CP/M macro assembler or the ZILOG assembler. The common 8080 mnemonic opcodes can also be used with either the MAC macro assembler, or the ASM assembler. These commands are listed in the various references.

The symbols in the list are interpreted as follows:

R	A single register: A, B, C, D, E, H, L, I, or R.
RR	A register pair: BC, DE, HL, AF (PSW), IX, IY, or SP
D	An eight-bit number (00-FF)
NN	An eight-bit number (0000-FFFF)
NNNN	A sixteen-bit number
(NNNN)	The contents of memory at location NNNN
B	A bit designation (0-7)
ADDR	A sixteen-bit number, used as an address, or a symbolic address name
(C)	The contents of a single register: A, B, C, D, E, H, or L

MAC		ZILOG	
LDX	R,D	LD	R,(IX+D)
LDY	R,D	LD	R,(IY+D)
STX	R,D	LD	(IX+D),R
STY	R,D	LD	(IY+D),R
MVIX	NN,D	LD	(IX+D),NN
MVIY	NN,D	LD	(IY+D),NN
LDAI		LD	A,I
LDAR		LD	A,R
STAI		LD	I,A
STAR		LD	R,A
LXIX	NNNN	LD	IX,NNNN
LXIY	NNNN	LD	IY,NNNN
LBCD	NNNN	LD	BC,(NNNN)
LDED	NNNN	LD	DE,(NNNN)
LSPD	NNNN	LD	SP,(NNNN)
LIXD	NNNN	LD	IY,(NNNN)
LIYD	NNNN	LD	IY,(NNNN)
SBCD	NNNN	LD	(NNNN),BC
SDED	NNNN	LD	(NNNN),DE
SSPD	NNNN	LD	(NNNN),SP
SIXD	NNNN	LD	(NNNN),IX
SIYD	NNNN	LD	(NNNN),IY
SPIX		LD	SP,IX
SPIY		LD	SP,IY
PUSHIX		PUSH	IX
PUSHIY		PUSH	IY
POPIX		POP	IX
POPIY		POP	IY
EXAF		EX	AF,AF'
EXX		EXX	
XTIX		EX	(SP),IX
XTIY		EX	(SP),IY
LDI		LDI	
LDIR		LDIR	
LDD		LDD	
LDDR		LDDR	
CCI		CPI	
CCIR		CPIR	
CCD		CPD	
CCDR		CPDR	
ADDX	D	ADD	(IX+C)
ADDY	D	ADD	(IY+D)
ADCX	D	ADC	(IX+D)
ADCY	D	ADC	(IY+D)
SUBX	D	SUB	(IX+D)
SUBY	D	SUB	(IY+D)
SBCX	D	SBC	(IX+D)
SBCY	D	SBC	(IY+D)
ANDX	D	AND	(IX+D)
ANDY	D	AND	(IY+D)
XORX	D	XOR	(IX+D)
XORY	D	XOR	(IY+D)
ORX	D	OR	(IX+D)
ORY	D	OR	(IY+D)
CMPM		CP	(HL)
CMPX	D	CP	(IX+D)
CMPY	D	CP	(IY+D)
INRX	D	INC	(IX+D)
INRY	D	INC	(IY+D)
DCRX	D	INC	(IX+D)
DCRY	D	DEC	(IY+D)
NEG		NEG	
IM0		IM0	
IM1		IM1	
IM2		IM2	
DADC	RR	ADC	HL,RR
DSBD	RR	SBC	HL,RR
DADX	RR	ADD	IX,RR
DADY	RR	ADD	IY,RR
INXIX		INC	IX
INXIY		INC	IY
DCXIX		DEC	IX
DCXIY		DEC	IY
BIT	B,R	BIT	B,R
SETB	B,R	SET	B,R
RES	B,R	RES	B,R

MAC		ZILOG	
BITX	B,D	BIT	B,(IX+D)
BITY	B,D	BIT	B,(IY+D)
SETX	B,D	SET	B,(X+D)
SETY	B,D	SET	B,(IY+D)
RESX	B,D	RES	B,(IX+D)
RESY	B,D	RES	B,(IY+D)
JR	ADDR	JR	ADDR-$
JRC	ADDR	JR	C,ADDR-$
JRNC	ADDR	JR	NC,ADDR-$
JRZ	ADDR	JR	Z,ADDR-$
JRNZ	ADDR	JR	NZ,ADDR-$
DJNZ	ADDR	DJNZ	ADDR-$
PCIX		JMP	(IX)
PCIY		JMP	(IY)
RETI		RETI	
RETN		RETN	
INP	R	IN	R,(C)
OUTP	R	OUT	(C),R
INI		INI	
INIR		INIR	
OUTI		OTI	
OUTIR		OTIR	
IND		IND	
INDR		INDR	
OUTD		OTD	
OUTDR		OTDR	
RLCR	R	RLC	R
RLCX	D	RLC	(IX+D)
RLCY	D	RLC	(IY+D)
RALR	R	RL	R
RALX	D	RL	(IX+D)
RALY	D	RL	(IY+D)
RRCR	R	RRC	R
RRCX	D	RRC	(IX+D)
RRCY	D	RRC	(IY+D)
RARR	R	RR	R
RARX	D	RR	(IX+D)
RARY	D	RR	(IY+D)
SLAR	R	SLA	R
SLAX	D	SLA	(IX+D)
SLAY	D	SLA	(IY+D)
SRAR	R	SRA	R
SRAX	D	SRA	(IX+D)
SRAY	D	SRA	(IY+D)
SRLR	R	SRL	R
SRLX	D	SRL	(IX+D)
SRLY	D	SRL	(IY+D)
RLD		RLD	
RRD		RRD	

Appendix C: Altos Interface Connector Wiring

The following list indicates the pin connections of the device connectors on the rear of the ACS8000 chassis. All of the console connectors are Serial Input/Output devices as is the serial printer jack. The auxiliary printer connector is a Parallel Input/Output device available to the user. Figures one and two contain diagrams of the locations of various connectors and their relationship with various serial and parallel ports.

Serial Input/Outpur Connector

PIN	USE
1	Chassis ground.
2	Received data.
3	Transmitted data.
4	Request to send.
5	Clear to send.
6	Data set ready.
7	Signal ground.
20	Data terminal ready.

Other pins are not used. Request To Send (pin 4) and Clear To Send (pin 5) are not normally implemented. Jumpers on the Printed Circuit Board allow their connection. Pin 8 is tied high through a resistor. Contact ALTOS for instructions for activating Request To Send or Clear To Send.

Parallel Input/Output Connector

PIN	USE
1	Data Strobe
2	Data 0
3	Data 3
4	Data 1
5	Data 6
6	Data 7
7	Acknowledge
8	Busy
9	Data 2
10	Data 4
11	Data 5
12	Control
13	Select
14	+5 Volts
15	Paper Empty
16	−12 Volts
17	Input Prime
18	Floating
19	Floating
26	Unassigned
34	Fault
35	Unassigned
36	+12 Volts

All of the remaining pins are ground.

Appendix D: Input/Output Port Assignments

The following is a listing of the I/O Port assignments for the ACS8000 system. The Chip Select Numbers correspond to the references in the ALTOS ROM Monitor and are the Port addresses used in software to read/write to that circuit. The Chip Select Number corresponds to the Circuit Chip location as shown on the Circuit Board schematics at Figures F-7A, F-7B and F-7C.

I/O PORT ASSIGNMENT FOR THE ACS8000 SYSTEM COMPONENTS PRESENT ON THE 8000, 8100 AND 8200 CIRCUIT BOARDS

PORT NUMBER	CHIP SELECT NUMBER	FUNCTION
00-03	Y0 (DMA)	Write commands to the DMA.
04	Y1 (FD1791)	Read: STATUS. Write: COMMAND.
05		Read: TRACK. Write: TRACK.
06		Read: SECTOR. Write: SECTOR.
07		Read: DATA. Write: DATA.
08	Y2 (PIO-CHA)	Read: FD1791 interrupt. Write: floppy disk drive select, side select and recording density.
09	Y2 (PIO-CHB)	Read: 9511A END,* DISK CHANGE,* PCB board type,* floppy drive type.* Write: MR to 1791, memory bank select.* Reset to 9511 for 8000 and 8100PC boards.
0A	Y2 (PIO-CHA)	Write commands to channel A.
0B	Y2 (PIO-CHB)	Write commands to channel B.
0C	Y3 (CTC-CH0)	Baud rate generator for console number 1 at JY.
0D	Y3 (CTC-CH1)	Unused (formerly generated delay for head load).
0E	Y3 (CTC-CH2)	Baud rate generator for printer number 1 at JX.
0F	Y3 (CTC-CH3)	Floppy disk drive index counter.
10	Y4 (PIO-CHA)	Parallel port I/O at J4 (normally used in I/O mode).
11	Y4 (PIO-CHB)	Parallel port I/O at J4 (normally used for data in an I/O only mode).
12	Y4 (PIO-CHA)	Write commands to channel A.
13	Y4 (PIO-CHB)	Write commands to channel B.
14-17	Y5 (IPL)	A write to any of these ports turns off the PROM after the initial program load (IPL).
18	Y6 (9511)	Write: data into stack. Read: data from stack.
19	Y6 (9511)	Write: command. Read: status.
1A	Y6 (9511)	Write: data into stack. Read: data from stack.
1B	Y6 (9511)	Write: command. Read: status.
1C	Y7 (SIO-CHA)	Read/write data to I/O port at JY (normally console number 1).
1D	Y7 (SIO-CHA)	Write commands to channel A. Read status of Channel A.
1E	Y7 (SIO-CHB)	Read/write data to I/O port at JX (normally printer number 1).
1F	Y7 (SIO-CHB)	Write commands to channel B. Read Status of Channel B.

*Function available only on 8200 circuit board.

COMPONENTS ON THE 8200 CIRCUIT BOARD

PORT NUMBER	SCHEMATIC REFERENCE	FUNCTION
20	Y8 (HD DSK)	Write drive and head number to hard disk controller. During data transfer to or from the hard disk, any of these ports (20-23) may be used as the data I/O port. (However, this address should only be accessed by the DMA to read or write data. The registers are write only when accessed by the CPU.)
21	Y8 (HD DSK)	Write sector number and old cylinder number to the hard disk controller.
22	Y8 (HD DSK)	Write new cylinder number to the controller.
23	Y8 (HD DSK)	Write command to the controller.
24	Y9 (PIO-CHA)	Read: status of the hard disk controller. Do not write.
25	Y9 (PIO-CHB)	Write: memory write protect bit. Read: hard disk configuration and memory size.
26	Y9 (PIO-CHA)	Write commands to channel A.
27	Y9 (PIO-CHB)	Write commands to channel B.
28	Y10 (SIO-CHA)	Read/write data to I/O port at JV (normally printer number 2).
29	Y10 (SIO-CHA)	Write commands to channel A. Read Status of Channel A.
2A	Y10 (SIO-CHB)	Read/write data to I/O port at JW (normally console number 4).
2B	Y10 (SIO-CHB)	Write commands to channel B. Read Status of Channel B.
2C	Y11 (SIO-CHA)	Read/write data to I/O port at JT (normally console number 2).
2D	Y11 (SIO-CHA)	Write commands to channel A. Read Status of Channel A.
2E	Y11 (SIO-CHB)	Read/write data to I/O port at JU (normally console number 3).
2F	Y11 (SIO-CHB)	Write commands to channel B. Read Status of Channel B.
30	Y12 (CTC-CH0)	Baud rate clock for console number 2 at JT.
31	Y12 (CTC-CH1)	Baud rate clock for consoles numbered 3 and 4 at JU and JW.
32	Y12 (CTC-CH2)	Baud rate clock for printer number 2 at JV.
33	Y12 (CTC-CH3)	Real time clock generator for time slicing the usage of the processor.

BIT ASSIGNMENT FOR THE I/O PORTS FUNCTIONS AVAILABLE ON 8000, 8100 AND 8200 CIRCUIT BOARDS

PORT	BIT	DESCRIPTION
00-03 (DMA)		(Not applicable.)
04-07 (FD1791)		(See the Western Digital FD1791 data sheet.)
08 (PIO-CHA)	BIT 7	SIDE SELECT for selecting the side (top or bottom) of the diskette to read or write on. Not supported under CP/M or MP/M.
	6	INTERRUPT input from the 1791.
	5	DRIVE SELECT 4 to select drive D.
	4	DRIVE SELECT 3 to select drive C.
	3	DRIVE SELECT 2 to select drive B.
	2	DRIVE SELECT 1 to select drive A.
	1	HLD input from the 1791 to indicate when the head is loaded. 0=not loaded, 1=loaded.
	0	DDEN negated, output to set the recording mode. 0=double density, 1=single density.
09 (PIO-CHB)	BIT 7*	Hardware switch indicates the type of floppy disk drives in the system. 0=SA800, 1=SA850.
	6	Hardware switch input to indicate the type of computer PCB. 0=8000 or 8100, 1=8200.
	5	(Unassigned.)
	4*	UN2, MSB of a two bit number to select the memory bank to be used.
	3*	UN1, LSB of the above number.
	2*	DISK CHANGE negated, input from the floppy disk drive. (See disk drive spec sheet for details.)
	1	MR (master reset) negated output to the FD1791. Normally a 1, take to 0 for 50 microseconds to reset.
	0*	END, input from the 9511 to indicate the completion of a calculation. On the 8000 and 8100 circuit board this is RESET output to the 9511.
0C (CTC-CH0)	In	2Mhz.
	Out	Baud rate for channel A of the SIO that outputs to JY (normally console number 1).
0D (CTC-CH1)	In	2Mhz.
	Out	(Not attached, on some 8000 or 8100 PCBs this was connected to the HLD signal from the 1771/1791 floppy disk controller chip.)
0E (CTC-CH2)	In	2Mhz.
	Out	Baud rate for channel B of the SIO that outputs to JX (normally printer number 1).
0F (CTC-CH3)	In	Index pulses from the selected floppy disk drive.
	Out	(None.)
10 (PIO-CHA)	BIT 7	(Unnamed) normally input from printer to the PIO.
	6	SELECT, normally input from printer to the PIO.
	5	BUSY, normally input from printer to the PIO.
	4	PAPER EMPTY, normally input from printer to the PIO.
	3	FAULT, normally input from printer to the PIO.
	2	CNTL, normally an output to the printer.
	1	INPUT PRIME, normally an output to the printer.
	0	DATA STROBE, normally an output to the printer.
11 (PIO-CHB)	BIT 7	DATA 7, normally an output to the printer.
	6	DATA 6, normally an output to the printer.
	5	DATA 5, normally an output to the printer.
	4	DATA 4, normally an output to the printer.
	3	DATA 3, normally an output to the printer.
	2	DATA 2, normally an output to the printer.
	1	DATA 1, normally an output to the printer.
	0	DATA 0, normally an output to the printer.
14-17 (IPL)		(Not applicable.)
18-19 (9511)		(See the AMD9511 specification sheet.)
1C (SIO-CHA)		(Not applicable.)
1E (SIO-CHB)		(Not applicable.)

*Available only on 8200 Circuit Board

AVAILABLE ON 8200 CIRCUIT BOARD

PORT	BIT	DESCRIPTION
1E (SIO-CHB)		(Not applicable.)
20-23 (Hard disk)		(See the HARD DISK interface specification in Section E below.)
24 (PIO-CHA)	BIT 7	READY, input from the selected hard disk.
	6	WRITE FAULT, input from the selected hard disk.
	5	(Unassigned.)
	4	CRC ERROR, input from the hard disk controller.
	3	RECORD NOT FOUND, input from the hard disk controller.
	2	BAD SECTOR, input from the hard disk controller.
	1	TASK COMPLETE, input from the hard disk controller.
	0	BUSY, input from the hard disk controller.
25 (PIO-CHB)	BIT 7	(Unassigned.)
	6	(Unassigned.)
	5	WRITE PROTECT, output to the hardware to prevent writing into the upper 16K of memory space. 0=not protected, 1=write protected.
	4	MEM SIZE, hardware switch input to describe the number of memory banks on the PCB. MSB of a two bit number.
	3	MEM SIZE, LSB of the above two bit number.
	2	DISK SIZE, hardware switch input to describe the size and number of hard disks attached to the system. MSB of a three bit number.
	1	DISK SIZE, middle bit of the above number.
	0	DISK SIZE, LSB of the above number. See below for the memory and disk size codes.
28 (SIO-CHA)		(Not applicable.)
2A (SIO-CHB)		(Not applicable.)
2C (SIO-CHA)		(Not applicable.)
2E (SIO-CHB)		(Not applicable.)
30 (CTC-CH0)	In	2Mhz.
	Out	Baud rate for channel A of the SIO that outputs to JT (normally console number 2).
31 (CTC-CH1)	In	2Mhz.
	Out	Baud rate for channel B of the SIO that outputs to JU and channel B of the SIO that outputs to JW (normally consoles 3 and 4).
32 (CTC-CH2)	In	2Mhz.
	Out	Baud rate for channel A of the SIO that outputs to JV (normally printer number 2).
33 (CTC-CH3)	In	2Mhz.
	Out	(None.)

MEMORY SIZE TABLE

Y9 Bit 4	Y9 Bit 3	Number of memory banks
0	0	1 (bank 0)
0	1	2 (banks 0 and 1)
1	0	3 (banks 0,1 and 2)
1	1	4 (all banks)

DISK SIZE AND CONFIGURATION TABLE

Y9 Bit 2	Y9 Bit 1	Y9 Bit 0	Drive 1	Drive 2
0	0	0	none	none
0	0	1	SA4004 (13MB)	none
0	1	0	SA4008 (26MB)	none
0	1	1	(unallowed combination)	
1	0	0	SA4004	SA4004
1	0	1	(unallowed combination)	
1	1	0	SA4008	SA4004
1	1	1	SA4008	SA4008

Appendix E: Disk Controller Status

FLOPPY DISK DRIVE STATUS

When a permanent error is detected on disk, the operating system will display the following message:

PERMANENT DISK ERROR, TRACK tt, SECTOR ss, STATUS xx

where tt and ss are the track and sector in error and status xx indicates the nature of the error as defined in the above table.

The Status code returned by the operating system reflects the cause of the error and is dependent upon the operation being performed. Thus a Seek Error and Record Not Found both have Error Code '10' depending upon which operation was being performed. The Status Codes returned are listed below:

Bit	All Type 1 Commands	Read Address	Read	Write
s7	Not ready	Not ready	Not ready	Not ready
s6	Write prot	0	Record type	Write prot
s5	Head loaded	0	Record type	Write fault
s4	Seek error	ID not fnd	Rec not fnd	Rec not fnd
s3	CRC error	CRC error	CRC error	CRC error
s2	Track 0	Lost data	Lost data	Lost data
s1	Index	DRQ	DRQ	DRQ
s0	Busy	Busy	Busy	Busy

The format of the Status Register is shown below.

Bits							
7	6	5	4	3	2	1	0
s7	s6	s5	s4	s3	s2	s1	s0

The system displays the Status Register is hexadecimal. The meaning of these errors and their most usual cause are described below:

SEEK ERROR (Code '10') indicates a hardware error. Contact the ALTOS maintenance facility for further instructions.

CRC ERROR—CYCLIC REDUNDANCY CHECK ERROR (Code '08') is an indication that the data read back from the disk is in error. Two CRC bytes are appended to both the Sector ID and the data field itself during a WRITE operation to the disk. This is done by a circuit in the floppy disk controller. When data is read back from the disk this same CRC circuit checks all the data (including the appended bytes) and determines whether the data has been read correctly. If the data is in error, the CRC ERROR will be set true. This same type of check is made on the Sector ID and a READ or WRITE of a sector will not occur if the ID shows a CRC ERROR. A CRC error generally indicates a media error.

RECORD NOT FOUND (Code '10') is an indication that the specified ID was not found on the addressed track during a READ or WRITE operation. The disk hardware makes a check of the specified track and

sector and if there is no match the RECORD NOT FOUND flag is set true and the operation is aborted. This error can be caused by either a media problem or disk drive hardware malfunction. A RECORD NOT FOUND indication may mean that the disk drive hardware did not step the read/write heads to the proper Track, or could mean that the address written on the disk drive was not correct.

HARD DISK STATUS

The Winchester hard disk returns a Status Code at the completion of every operation requested by a program. The status code is then utilized by the calling program to determine the status of the requested operation.

The Status Codes are returned in a Status Byte by the hard disk in the following format:

BIT 7 READY
BIT 6 WRITE FAULT
BIT 5 (UNASSIGNED)
BIT 4 CRC ERROR
BIT 3 RECORD NOT FOUND
BIT 2 BAD SECTOR
BIT 1 TASK COMPLETE
BIT 0 BUSY

The format of the Status Register is shown below.

Bits							
7	6	5	4	3	2	1	0
s7	s6	s5	s4	s3	s2	s1	s0

When a permanent error is detected on disk, the operating system will display the following message:

PERMANENT DISK ERROR, TRACK tt, HEAD hh, SECTOR ss, STATUS xx

where tt, hh, and ss are the track, head and sector in error and status xx indicates the nature of the error as defined in the above table.

The Status Code returned by the drive is the HEXADECIMAL representation of the hard disk Status Byte. Depending upon the type of operation requested by the user more than one indicator may be on within the Status Byte. For example, if the user requested a Read operation which had completed successfully the Status Code would indicate '82.' The hard disk has set two status indicators on '80' indicating READY and '02' indicating TASK COMPLETE. The user should break down the Status Code into its component parts.

The meaning of each Status Bit is defined below with some indication as to the possible cause of the problem.

READY (Code '80') indicates when the drive is ready to be accessed. When initially powered on, the drive will not be ready and requires approximately 1.5 minutes to reach speed and become ready. During this time READ's, WRITE's and head motion are prohibited by the Drive itself. Any such command will wait until the Ready condition is true before commencing.

WRITE FAULT (Code '40') indicates a FAULT condition at the Write Heads, and must be cleared by a FAULT CLEAR Command to the drive before the drive can be written to. When this error occurs the disk drive is usually experiencing hardware problems. Go to the Hard Disk Hardware Diagnostic Procedure section of this manual.

CRC ERROR—CYCLIC REDUNDANCY CHECK ERROR (Code '10') is an indication that the data read back from the disk is in error. Two CRC bytes are appended to both the Sector ID and the data field itself during a WRITE operation to the disk. This is done by a circuit in the hard disk controller. When data is read back from the disk this same CRC circuit checks all the data (including the appended bytes) and determines whether the data has been read correctly. If the data is in error, the CRC ERROR will be set true. This same type of check is made on the Sector ID and a READ or WRITE of a sector will not occur if the ID shows a CRC ERROR. A CRC error generally indicates a media error. Go to the Media Error Diagnostic Procedure section of this manual.

RECORD NOT FOUND (Code '08') is an indication that the specified ID was not found on the addressed track during a READ or WRITE SECTOR operation. The disk hardware makes a check of the specified cylinder, head and sector and if there is no match the RECORD NOT FOUND flag is set true and the operation is aborted. This error can be caused by either a media problem or disk drive hardware malfunction. A RECORD NOT FOUND indication may mean that the disk drive hardware did not step the read/write heads to the proper Track, or could mean that the address written on the disk drive was not correct. Go to the Media Error Diagnostic Procedure section of this manual.

BAD SECTOR (Code '04') is an indication that the addressed sector has a media defect that makes the sector unusable. Media defects at the time of manufacture are identified by Shugart through an analog scan of the disk. Before shipment from the ALTOS factory these bad sectors are labeled in their Sector ID as bad sectors. If a READ or WRITE operation to such a sector is attempted, the Bad Sector Flag will be set and the operation aborted. This problem is usually a media problem. Go to the Media Error Diagnostic Procedure section of this manual.

TASK COMPLETE (Code '02') is an indication to the operating system that the requested command has been completed and (with the exception of the 20MS delay required following a HOME or SEEK) the system is ready for the next operation. The RESET command does not result in a TASK COMPLETE. Commands RECAL, SEEK, FORMAT, WRITE, READ DATA and READ ID all generate the TASK COMPLETE indication. The TASK COMPLETE indication is cleared upon the issuance of another command. This Status Code is not an error indication.

BUSY (Code '01') is an indication that the system is in the process of carrying out a command. This Status Code is not an error indication.

Appendix F:
System Startup and Shutdown Checklist

SYSTEM STARTUP CHECKLIST

1. Power on ACS8000 System.
2. Power on Winchester Hard Disks (if present).
3. Power on additional hardware devices.
4. Terminal send/receive mode on.
   Terminal in full duplex mode.
5. Insert system disk in drive A.
6. Press the RESET button.
7. Prompt symbol "AMEX(A)", "0A>" or "A>" indicates good system load.

SYSTEM SHUTDOWN CHECKLIST

1. Remove floppy diskettes from all disk drives.
2. Power off Winchester disk drives if present.
3. Power off additional hardware.
4. Power off ACS8000.

THE WINCHESTER HARD DISK MUST BE POWERED OFF PRIOR TO POWERING DOWN THE ACS8000 TO INSURE DATA INTEGRITY ON THE HARD DISK.

Appendix G: Multi-User System Interrupt Priority

The multi-user ACS8000 system utilizing chassis 8200 services consoles, disk drives and other peripheral devices on an interrupt basis. The following list provides the hardware interrupt priority service sequence:

PRIORITY	CHIP/FUNCTION	DESCRIPTION
1	Y11/SIO	Console #2
2	Y11/SIO	Console #3
3	Y10/SIO	Printer #2
4	Y10/SIO	Console #4
5	Y7/SIO	Printer #1
6	Y7/SIO	Console #1
7	Y4/PIO	Parallel Port
8	Y9/PIO	Hard Disk Status
9	Y12/CTC	Baud Rate Clock for Printer #2
10	Y12/CTC	Baud Rate Clock for Console #2
11	Y12/CTC	Baud Rate Clock for Consoles #3 and #4
12	Y12/CTC	Real Time Clock
13	Y3/CTC	Baud Rate Clock for Printer #1
14	Y3/CTC	Baud Rate Clock for Console #1
15	Y3/CTC	Index Pulse Counter
16	Y3/CTC	Timer
17	Y2/PIO	Floppy Disk Select
18	Y0/DMA	Disk Transfer

Appendix H: Circuit Chip Location Map

Major circuit chips on the ACS8000 family of systems are located by an alphabetic/numeric matrix system. Figures 7A, 7B and 7C are circuit block diagrams for each of the three ACS8000 chassis which detail the grid number of the chips. This Appendix provides a cross reference by function of the chip and location. Appendix D provides a detailed description of chip number and function.

CHIP NUMBER	CHIP FUNCTION	LOCATION BY CHASSIS 8000	8100	8200
Y0	DMA	15AB	15AB	14N
Y1	Disk Controller	17AB	17AB	23S
Y2	PIO/Disk Select	17CD	17CD	19N
Y3	CTC	17EF	17EF	14P
Y4	PIO	18FG	18FG	19R
Y5	PROM	12E	12E	13K
Y6	FPP-9511	17H	17H	18M
Y7	SIO	14G	14G	14R
Y8	Hard Disk Cont.	—	—	18F,20E,21D
Y9	PIO	—	—	13E
Y10	SIO	—	—	13C
Y11	SIO	—	—	13D
Y12	CTC	—	—	16C
CPU	Z-80 CPU Chip	14AB	14AB	14M
MEMORY	Single User			
	0K-32K	1A-8B	1A-8B	—
	32K-48K	1C-8C	1C-8C	—
	48K-64K	1D-8D	1D-8D	—
MEMORY	Multi-User			
	System Memory	—	—	1H-8H
	Bank 0	—	—	1E-8G
	Bank 1	—	—	1K-8M
	Bank 2	—	—	1P-8S
	Bank 3	—	—	1A-8C

Appendix I: ACS8000 Models and Facilities

The following chart displays the capabilities of the ACS8000 family of computers. There are three notes on interpreting this chart:

1. A floppy diskette indication of "DBL" density indicates both single and double density mode.
2. MAX USERS greater than 1 indicates a multiuser system.
3. Each ACS8000 system built on an 8000 or 8100 chassis can hold 32K, 48K or 64K bytes of memory.

ACS8000 MODEL	FLOPPY DISKS NO.	DENS.	SIDES	WINCHESTER DISKS 14.5M	29M	MAX. USERS	CIRCUIT BOARD
8000-1S	1	SGL	SGL	0	0	1	8000
8000-2S	1	DBL	SGL	0	0	1	8100
8000-3S	1	SGL	DBL	0	0	1	8000
8000-4S	1	DBL	DBL	0	0	1	8100
8000-1	2	SGL	SGL	0	0	1	8000
8000-2	2	DBL	SGL	0	0	1	8100
8000-3	2	SGL	DBL	0	0	1	8000
8000-4	2	DBL	DBL	0	0	1	8100
8000-5	2	DBL	SGL	0	0	1	8200
8000-6	2	DBL	SGL	1	0	1	8200
8000-7	2	DBL	SGL	0	1	1	8200
8000-8	2	DBL	DBL	1	0	1	8200
8000-9	2	DBL	DBL	0	1	1	8200
8000-5/MU2	2	DBL	SGL	0	0	2	8200
8000-6/MU2	12	DBL	SGL	1	0	2	8200
8000-7/MU2	2	DBL	SGL	0	1	2	8200
8000-8/MU2	2	DBL	DBL	1	0	2	8200
8000-9/MU2	2	DBL	DBL	0	1	2	8200
8000-5/MU4	2	DBL	SGL	0	0	4	8200
8000-6/MU4	2	DBL	SGL	1	0	4	8200
8000-7/MU4	2	DBL	SGL	0	1	4	8200
8000-8/MU4	2	DBL	DBL	1	0	4	8200
8000-9/MU4	2	DBL	DBL	0	1	4	8200

Appendix J:
Operating Software Systems Requirements

The following table displays which software operating systems will function with various ACS8000 configurations. For "Single User" systems "Y" indicates the operating system is supported with this amount of system memory. For "Multi User" systems the number indicates the number of concurrent users supported with the specified memory configuration.

OPERATING SYSTEM	SINGLE USER SYSTEMS CHASSIS 8000/8100			MULTI-USER SYSTEMS CHASSIS 8200			
	32K	48K	64K	64K	112K	160K	208K
AMEX	N	N	N	1	2	3	4
CP/M	Y	Y	Y	1	1	1	1
MP/M	N	N	Y	1	2	3	4
UCSD/PASCAL	Y	Y	Y	1	1	1	1

*If the ACS8000 is configured with the optional DMA feature.

OPERATING SYSTEM	DISK SUPPORTED	SA4004 14.5M SIZE		SA4008 29M SIZE	
		NUMBER	SIZE	NUMBER	SIZE
AMEX	YES	1	13M	1	26M
CP/M	YES	2	8M	3	8M
MP/M	YES	2	8M	3	8M
USCD/PASCAL	NO	—	—	—	—

The other primary consideration is the support of the Winchester disks. The following chart indicates the method of support. The two columns represent the two capacities of the Winchester disk. The NUMBER field is the number of logical disks which the operating system maps the one physical disk into. The SIZE parameter is the largest single file the operating system gives the user on the disk.

Appendix K:
8200 Circuit Board System Description Block

The multi-user ACS8000 chassis is designed for field upgrading in the addition of user memory to increase the number of concurrent users, and in the addition of a second Winchester disk drive to increase disk capacity.

This is accomplished through the use of a System Description Block on the 8200 circuit board. This hardware block is located at location 12E on the board. It consists of 24 pins on which metal connectors are places to indicate:

1. The number of user memories in the system.
2. The number and types of Winchester disks attached to the system.

When the system is initially powered on and the ALTOS Monitor system loaded from the ROM the Monitor system interrogates the System Description Block to find the system configuration.

The System Description Block is pre-pinned at the factory to reflect the proper system configuration. The format of the pins is as follows:

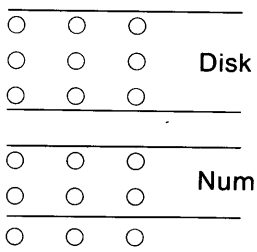

DEFINING NUMBER AND TYPE OF WINCHESTER DISKS

The top three pins in the system are utilized to show the number and types of Winchester disks on the system. The pinning notation "DRIVE 1" is the integrated drive supplied by ALTOS. "DRIVE 2" is the additional drive which can be attached to the "ADDITIONAL DISK CONNECTOR." The Winchester disk models are the (1) SA4004 which has an unformatted capacity of 14.5M bytes, and (2) the SA4008 which has an unformatted capacity of 29M bytes of data.

Only the DRIVE SIZE designation pins of the System Description Block are shown in the following diagrams.

Setting 1

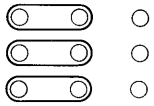

DRIVE 1: No Drive
DRIVE 2: No Drive

Setting 2

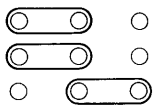

DRIVE 1: SA4004 (14.5M Bytes)
DRIVE 2: No Drive

Setting 3

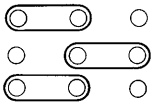

DRIVE 1: SA4008 (29M Bytes)
DRIVE 2: No Drive

Setting 4

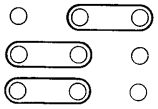

DRIVE 1: SA4004 (14.5M Bytes)
DRIVE 2: SA4004 (14.5M Bytes)

Setting 5

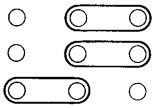

DRIVE 1: SA4008 (29M Bytes)
DRIVE 2: SA4004 (14.5M Bytes)

Setting 6

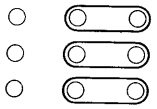

DRIVE 1: SA4008 (29M Bytes)
DRIVE 2: SA4008 (29M Bytes)

DEFINING NUMBER OF USER MEMORIES

The number of banks of user memory is defined in rows 4 and 5 of the System Description block. Only these two rows are shown in the following diagrams.

One Bank Of User Memory (64K Bytes)

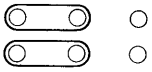

Two Banks Of User Memory (112K Bytes)

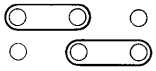

Three Banks Of User Memory (160K Bytes)

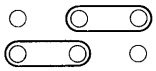

Four Banks Of User Memory (208K Bytes)

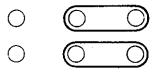

Appendix L: Hard Disk Bad Sectors

The ALTOS HARDTEST Utility Function 14 (Verify Addresses For All Sectors On Disk) allows the user to determine which sectors have been identified as bad during the formatting and assignment of alternate sectors process. When the hard disk is delivered from the ALTOS factory the user should execute HARDTEST Function 14 (see the ALTOS Diagnostics System manual for details) and write down the bad sectors. If other bad sectors are encountered over time these should be added to the list.

If the user must ever reformat the disk this list should be used as the basis for marking bad sectors utilizing HARDTEST Function 10 (Set Flag Byte For A Specific Sector).

TRACK	HEAD	SECTOR

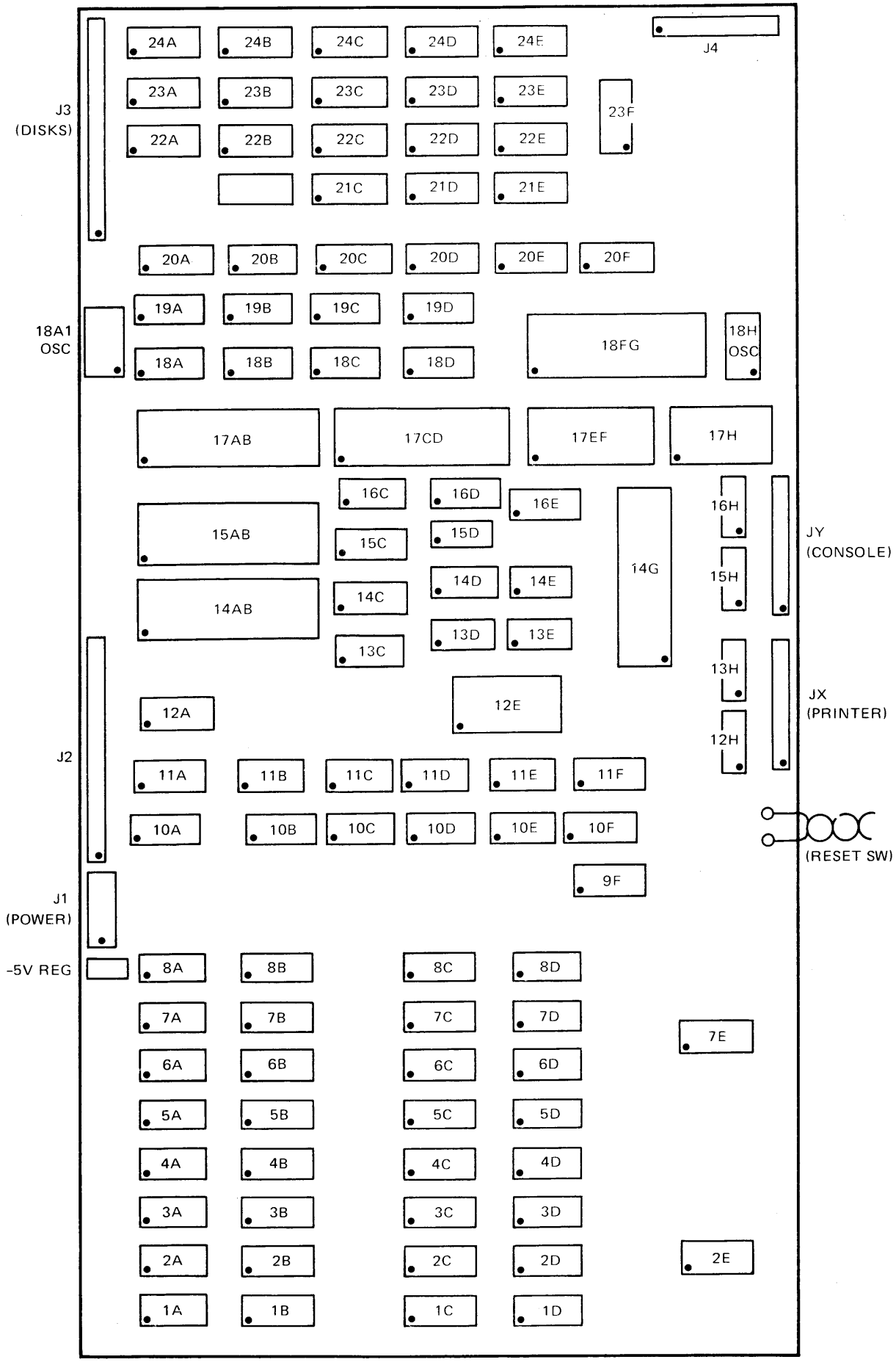

FIGURE 7 OVERALL INTEGRATED CIRCUIT LOCATION DIAGRAM - DOUBLE DENSITY

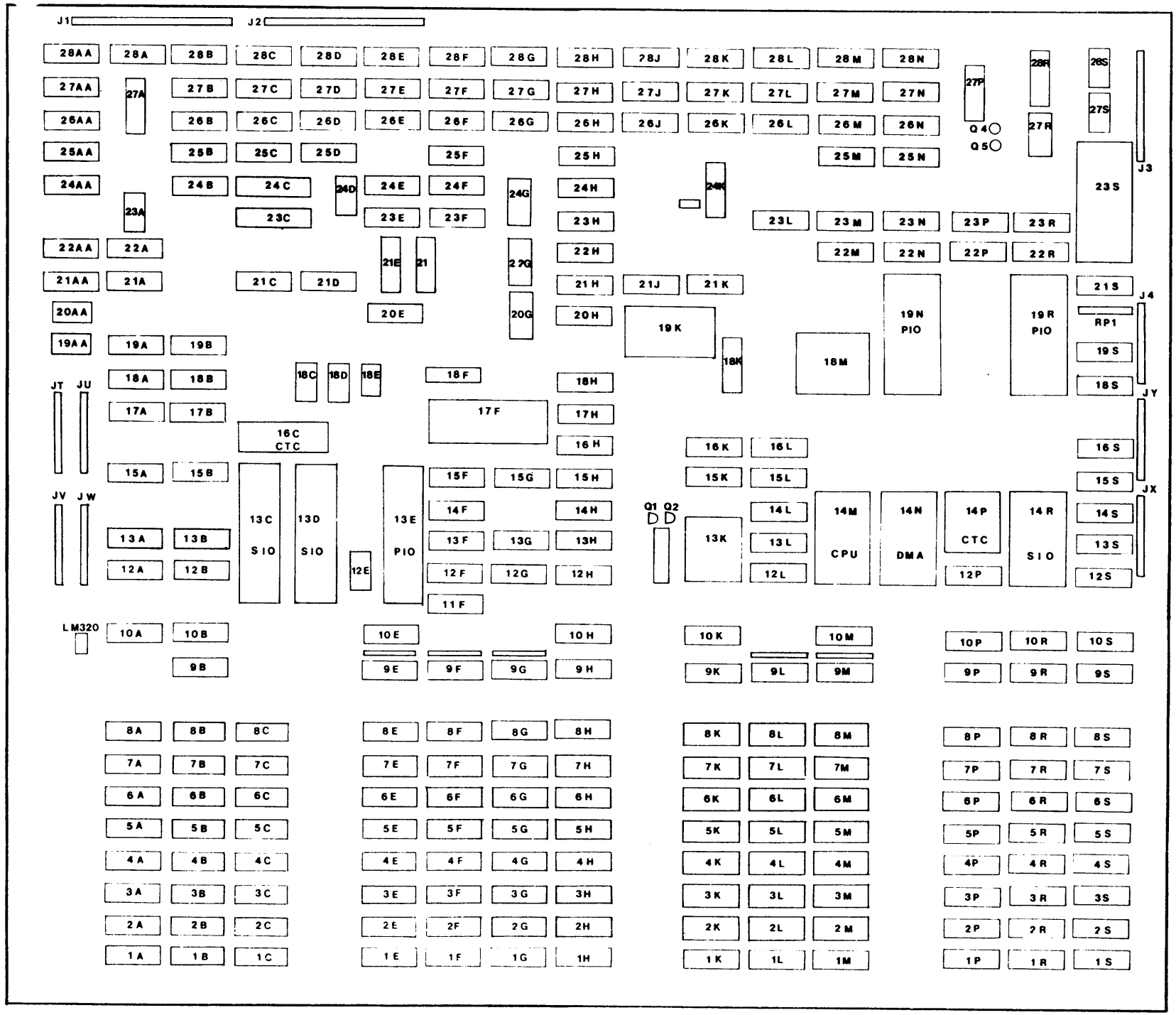

FIGURE 7C. CIRCUIT LOCATION - CHASSIS 8200

Appendix M: Field Upgrading ACS8000/5 Systems

All ACS8000/5 systems are configured without the necessary circuit chips to support the Winchester hard disk subsystem. The 8200 circuit board on which these systems are built will support Winchester hard disk with the addition of these additional components.

The 8000/5 system supports a single user. The unit may be upgraded to support multiple users through the addition of circuit components and the necessary additional memory chips.

Both of these upgrades may be done in the field. Components are available from ALTOS in the form of upgrade kits. Contact ALTOS for ordering details. The following procedures should be followed for field upgrade.

	LOCATION	COMMERCIAL CHIP NUMBER
1.	17F	82S100
2.	21E	9403
3.	21F	9403
4.	27H	9401
5.	20H	S163
6.	17H	S163
7.	21H	S163
8.	24H	S163
9.	27A	25LS2521
10.	23C	25LS2521

UPGRADE FOR MULTI-USER CAPABILITY

1. Delete a jumper between pins 7 and 9 of the DIP at 13C.
2. Add a SIO chip at circuit board location 13C.
3. Add a SIO chip at circuit board location 13D.
4. Add memory chips as per the following:

A: If upgrade to MU2 (2 user) system add 24 chips at locations 1K-8K, 1L-8L and 1M-8M.

B. If upgrade to MU4 (4 user) system add 72 chips at locations 1K-8K, 1L-8L, 1M-8M, 1P-8P, 1R-8R, 1S-8S, 1A-8A, 1B-8B and 1C-8C.

NOTE: The locations of these chip sockets are detailed on in Figure 7C-8200 Chassis.

UPGRADE FOR HARD DISK CAPABILITY

The 8000/5 may be upgraded to support the Winchester hard disk through the addition of 10 component chips which are inserted into the 8200 chassis. These components are available from ALTOS in a prepackaged upgrade kit. The components are marked with commercial identification numbers which are utilized below. See Figure 7C—8200 Chassis for specific locations of each chips DIP (socket).

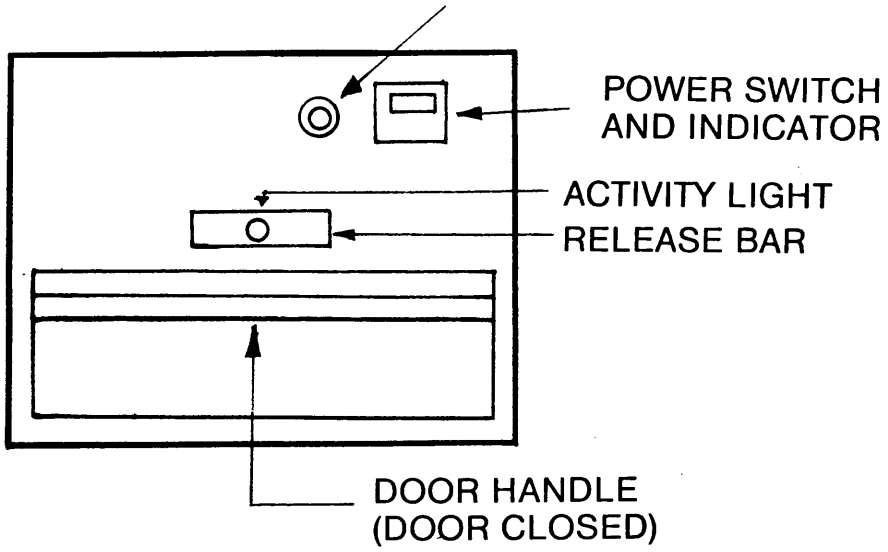

FRONT PANEL

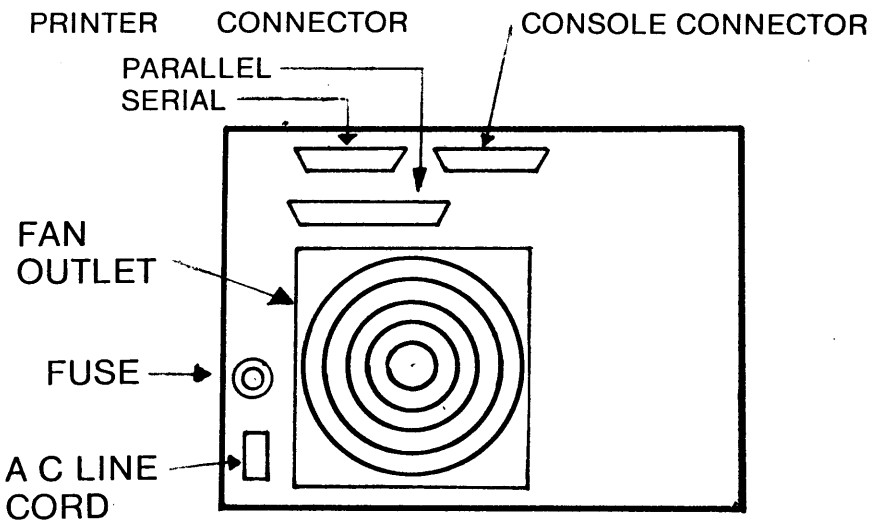

REAR PANEL

SINGLE FLOPPY DISK SINGLE USER

FIGURE 1A

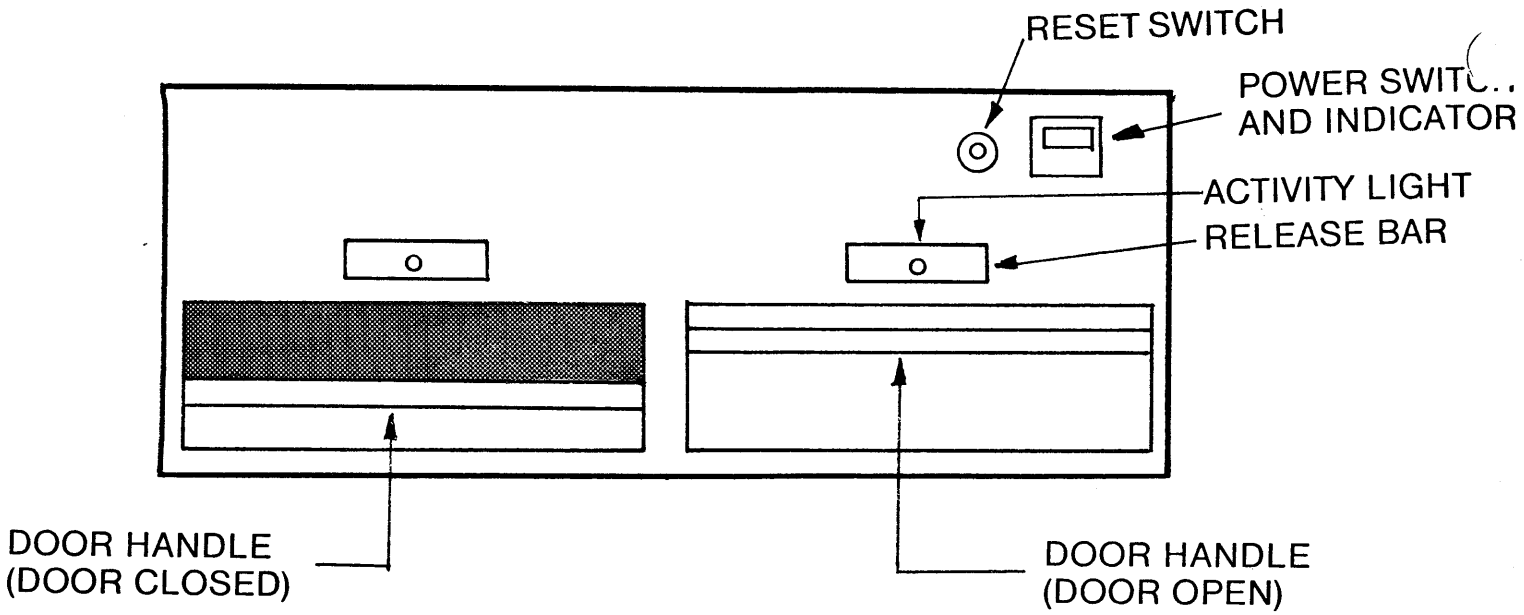

FRONT PANEL

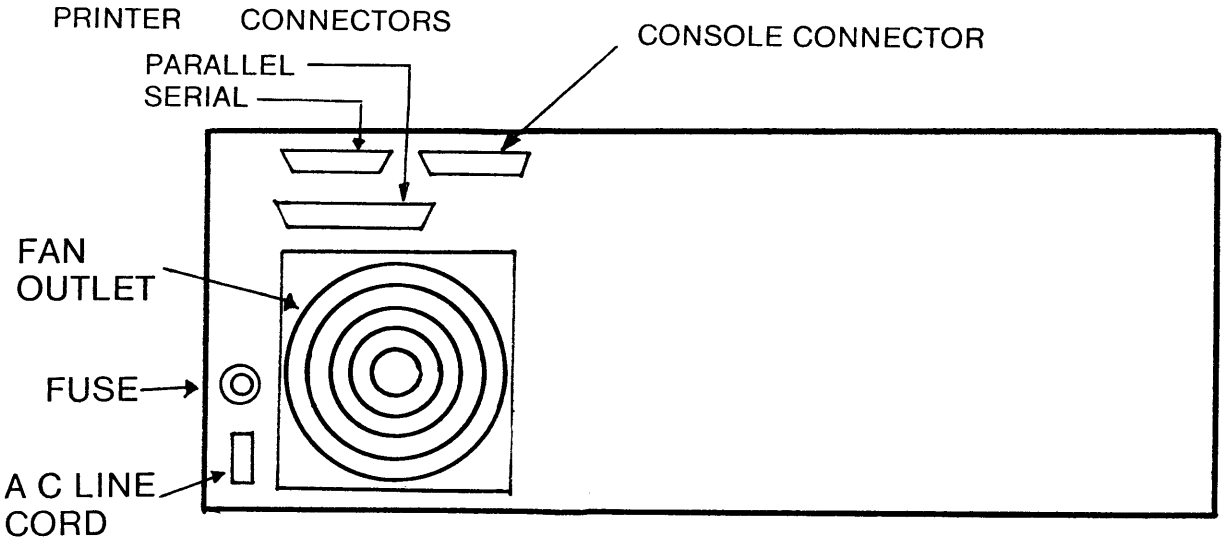

REAR PANEL

DUAL FLOPPY DISK SINGLE USER

FIGURE 1B

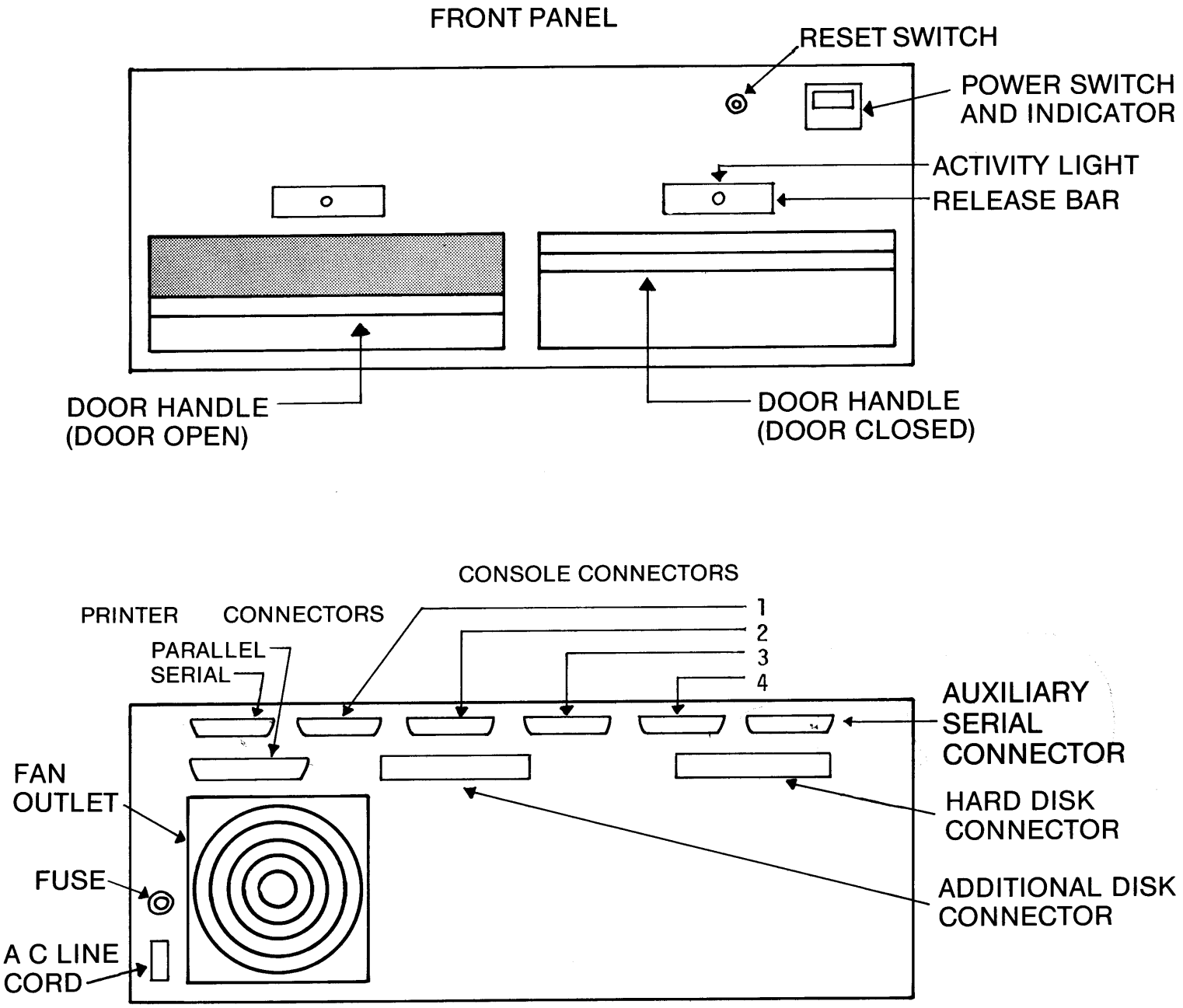

MULTI-USER SYSTEM

FIGURE 2

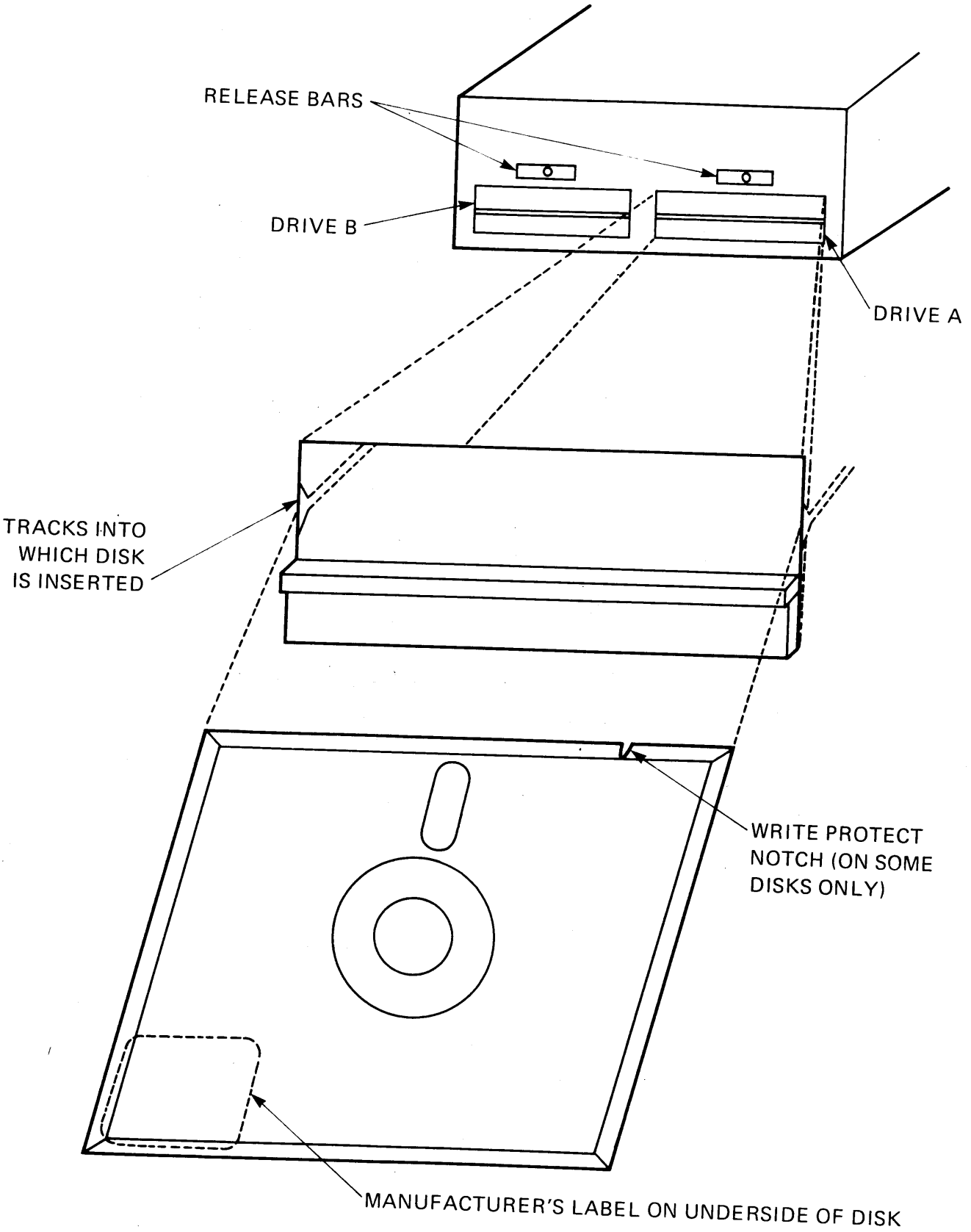

FIGURE 3 DISK INSERTION

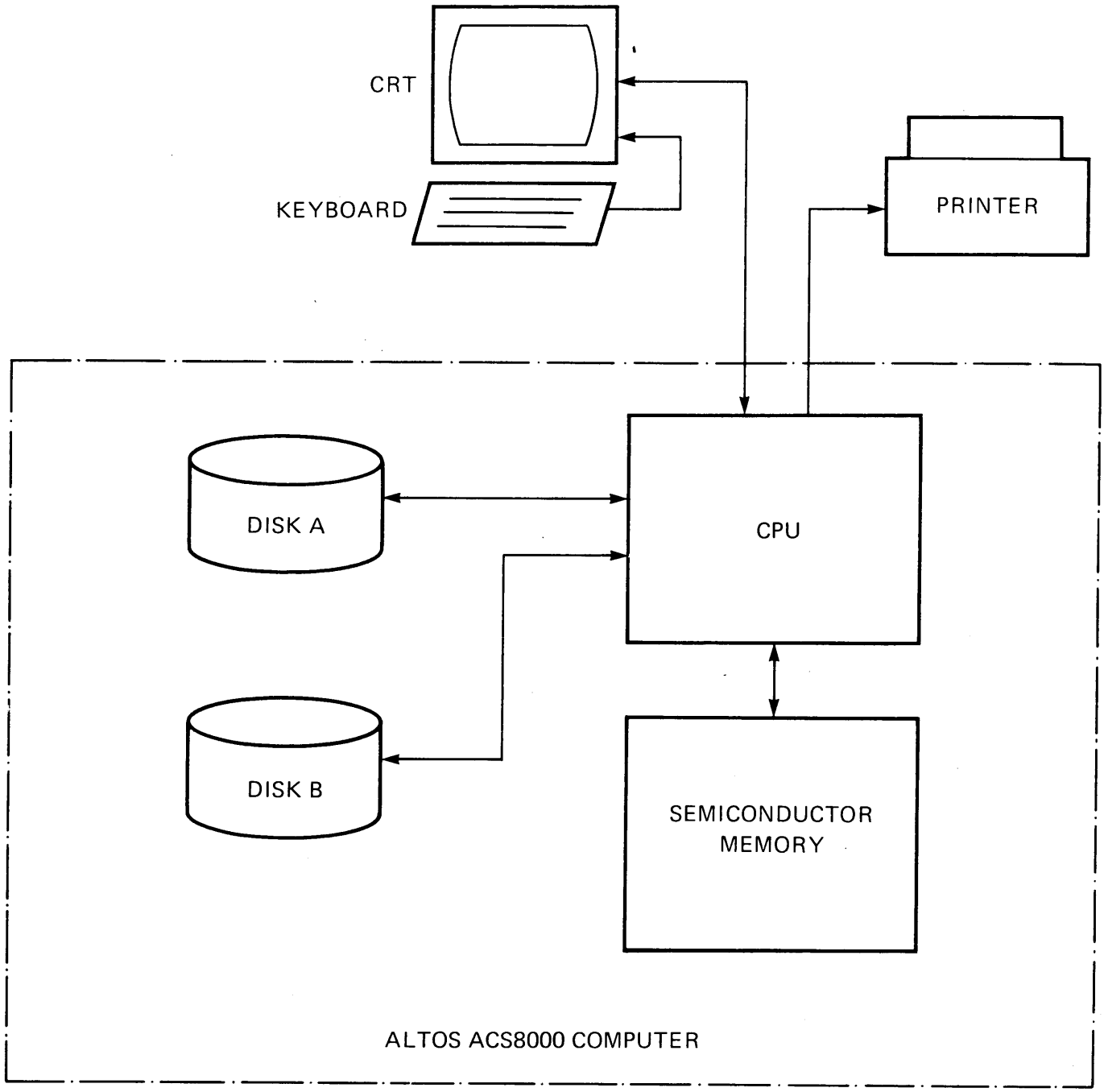

FIGURE 4 GENERAL MICPOCOMPUTER SYSTEM DIAGRAM

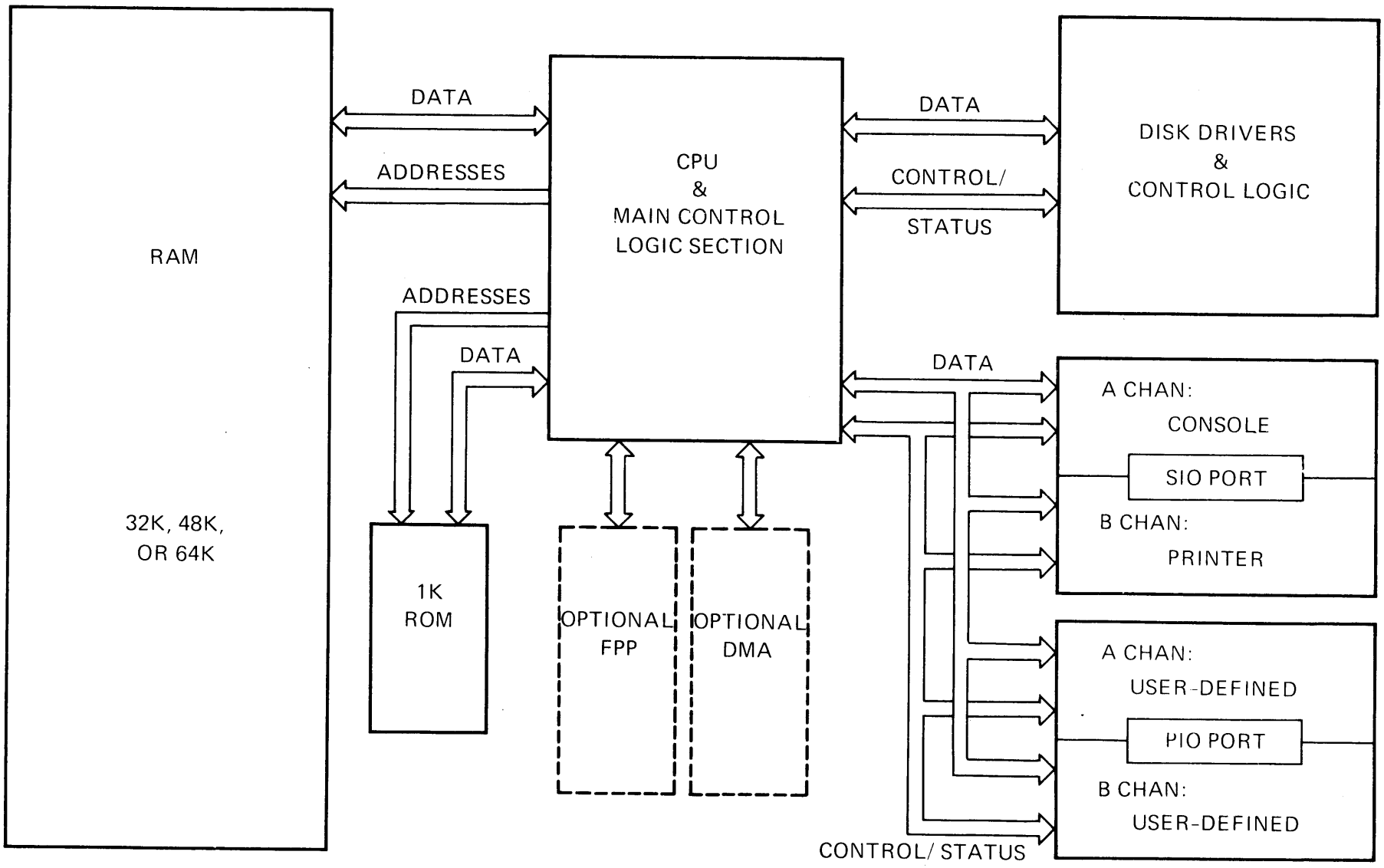

FIGURE 5 ACS8000 BLOCK DIAGRAM

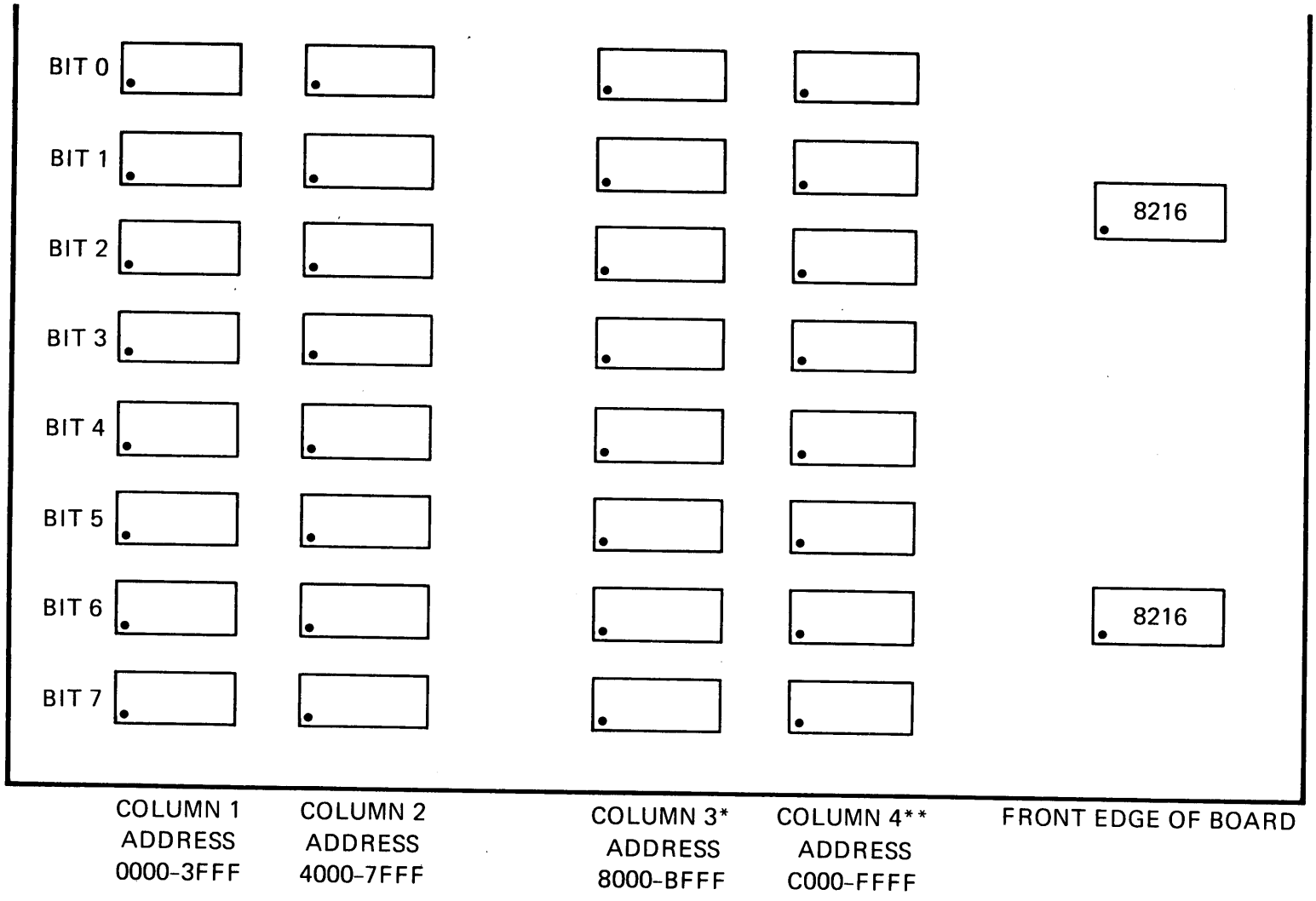

* THIS COLUMN IS EMPTY IN 32K SYSTEMS.
** THIS COLUMN IS EMPTY IN 32K AND 48K SYSTEMS.

FIGURE 6 MEMORY CHIP LOCATION DIAGRAM

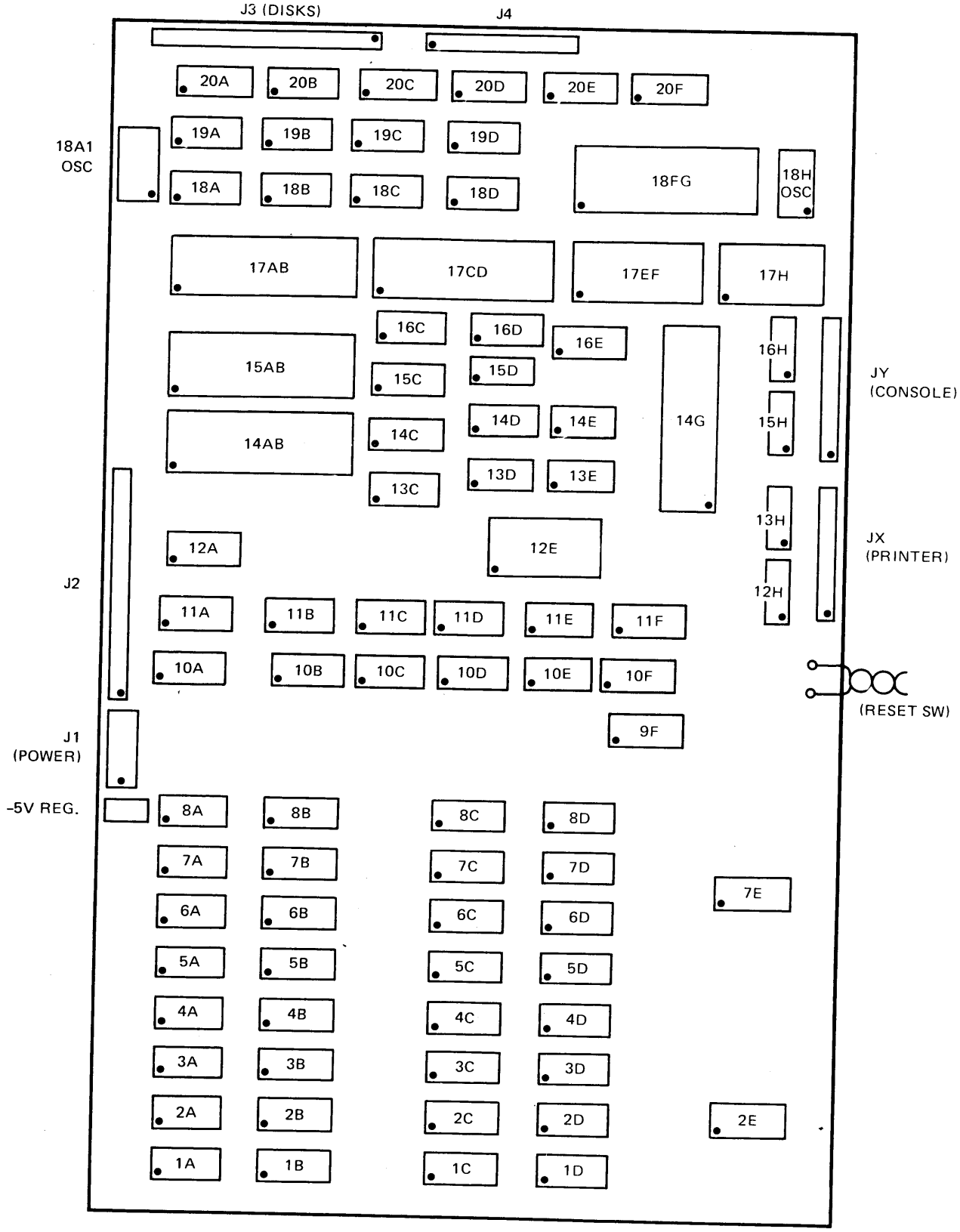

FIGURE 7 OVERALL INTEGRATED CIRCUIT LOCATION DIAGRAM - SINGLE DENSITY

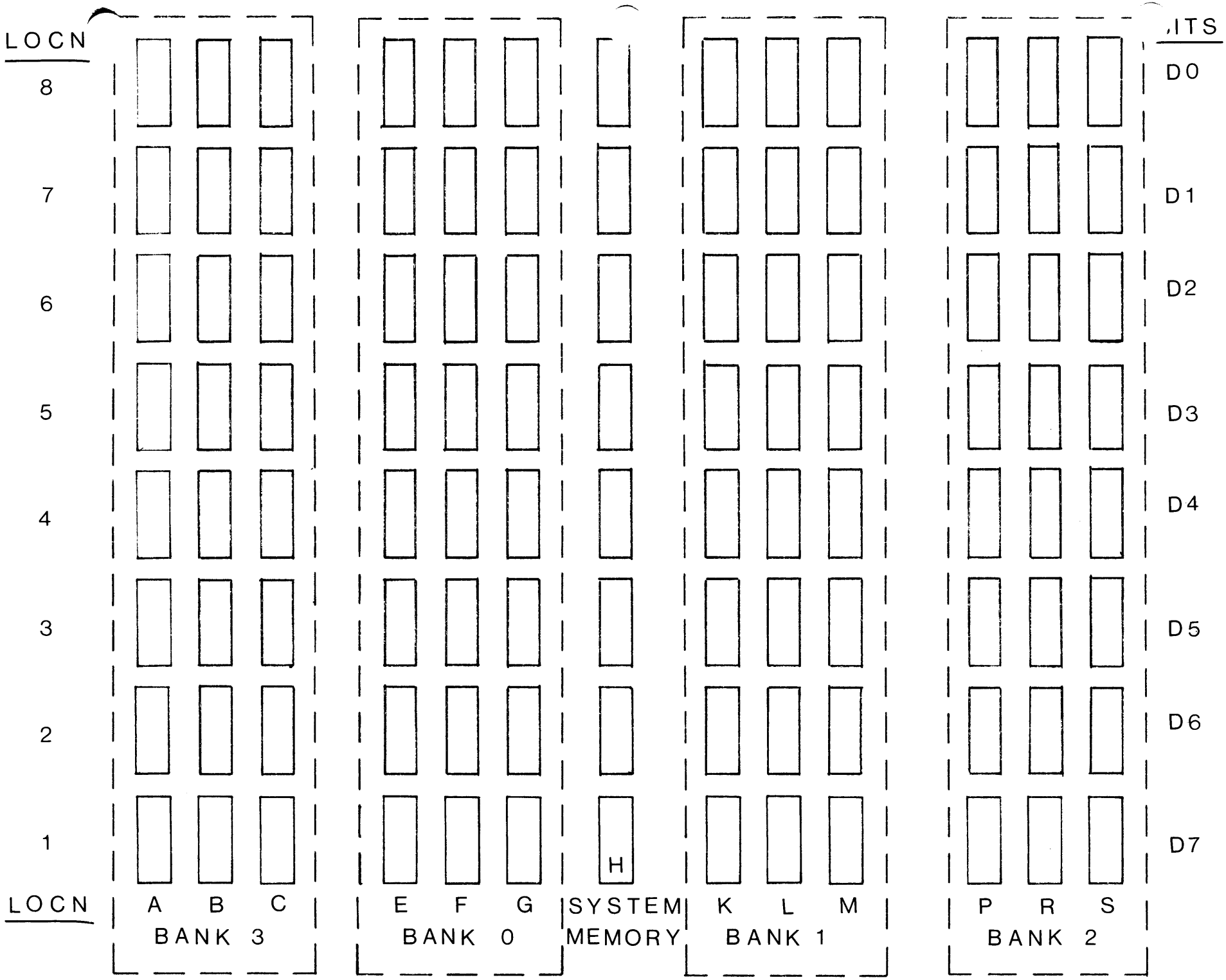

FIGURE 8: MULTI-USER MEMORY

The spindle locking screw (1) must be removed and the power plug (2) must be installed before applying power to the unit. See Directions for Stepper Motor lock (4). Turn in direction of arrow only (3). D.C. Power connector (5).

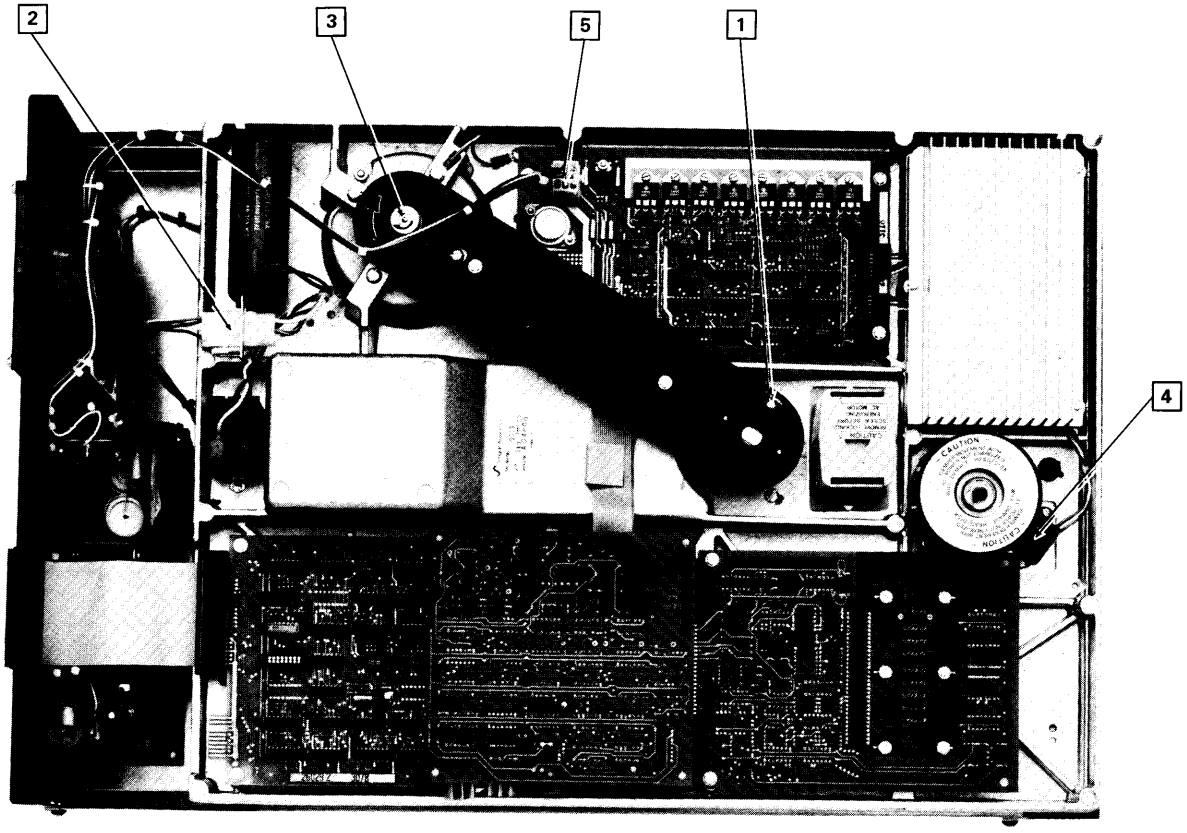

FIGURE 9: WINCHESTER DISK SETUP

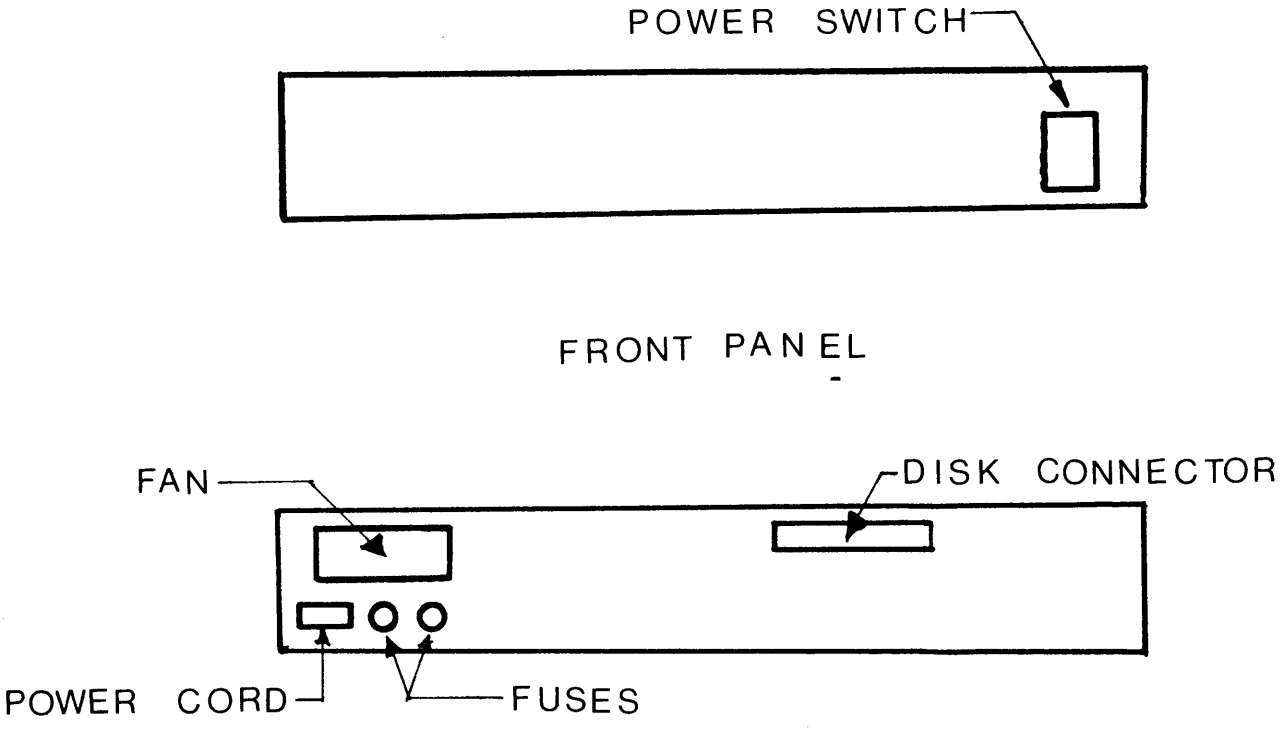

FIGURE 10; WINCHESTER DISK CONNECTION

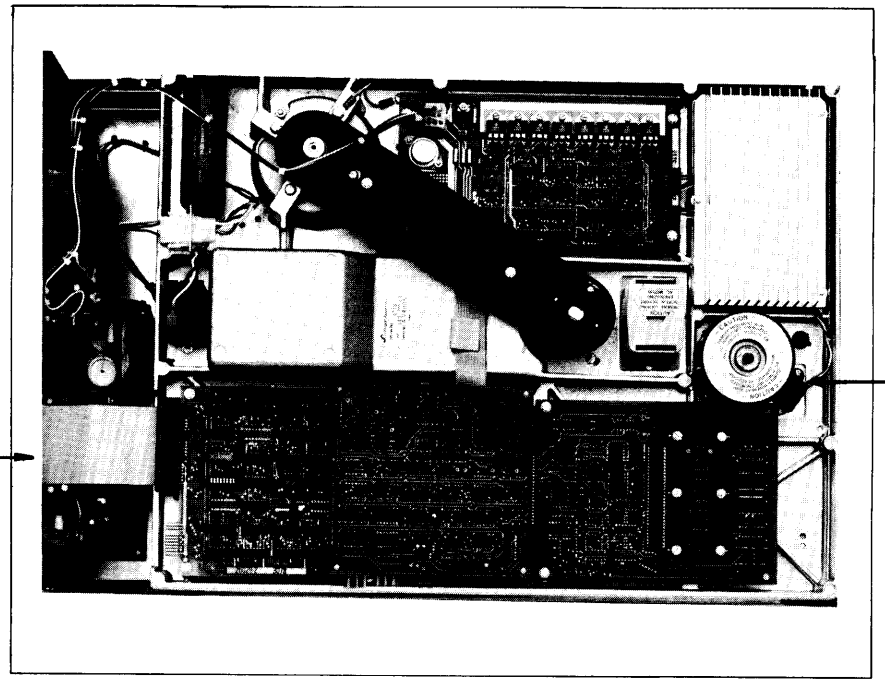

ADDRESS PINNING

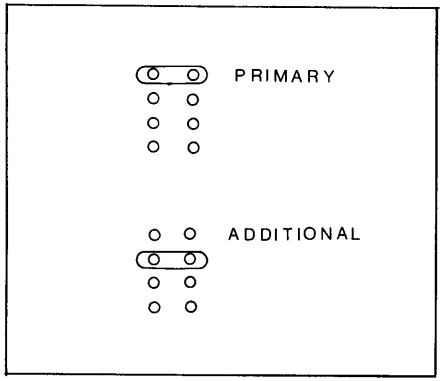

STEPPER LOCK

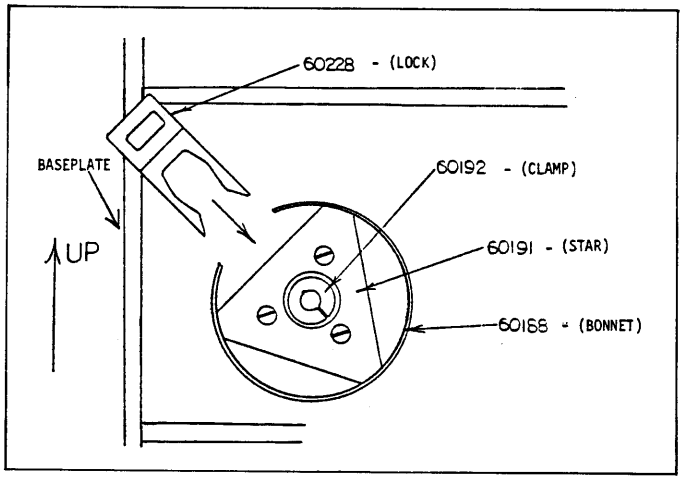

FIGURE 11: DIS ODRESS PINNING

Schematics

Packed with Fresh Ideas

DWG. NO.	SH	REV.

REVISIONS

ZONE	REV	ECO#	DESCRIPTION	DWN	CHKD	DATE

MEMRD
HDRD
GTRD
18E
LS10
DBØ
DB1
DB2
DB3
15K
8216
DB4
DB5
DB6
DB7
16K
8216
NMI
WAIT
BUSRQ
INT
+5
15H
8 MHz
OSC
14H
LS04
12H
LS163
2MHz
1 MHz
R7 1K
C2 100pf
C3 100pf
R2 470
R3 410
R4 240
Q2 2N3904
+12
R56 4.7K
R6 20Ω
R1 120
Q1 2N3906
R5 20Ω
R53 4.7K
R54 4.7K
R55 4.7K
Φ
MR RESET
MASTER RESET
R8 100Ω
R9 2.7K
C1 100μf
18K LS14
IPLW
12F LS74
PR
CLR
28H LS00
IPL
MREQB
RDB
AB1Ø
16L
S26Ø
IOWR
Y5
12G LS32
13K
2708
ABØ
AB1
AB2
AB3
AB4
AB5
AB6
AB7
AB8
AB9
DBØ
DB1
DB2
DB3
DB4
DB5
DB6
DB7
Ce
Z0
DØ
D1
D2
D3
D4
D5
D6
D7
Z80A CPU
14M
14N Z80 DMA
BUSRQ
BUSAK
M1
IORQ
MREQ
RD
WR
INT
SDMA
IEI
NC
Q3 2N3906
R10 1K
R11 1K
12P 7406
MR RESET
A1Ø
A9
A8
A7
A6
A5
14L LS367/ 8T97
A15
A14
A13
A12
A11
A4
15L LS367/ 8T97
A3
A2
A1
AØ
M1
12L LS367/ 8T97
RD
WR
MREQ
IORQ
BUSAK
13L LS367/ 8T97
AB1Ø
AB9
AB8
AB7
AB6
AB5
AB15
AB14
AB13
AB12
AB11
AB4
AB3
AB2
AB1
ABØ
M1B
RFSHB
RDB
WRB
MREQB
IORQB
BUSAKB
HALTB
19K LS154
AB2
AB3
AB4
AB5
AB6
AB7
YØ
Y1
Y2
Y3
Y4
Y5
Y6
Y7
Y8
Y9
Y1Ø
Y11
Y12
RDB
IORQC
WRB
12G LS32
IORD
IOWR

| | | | | | |

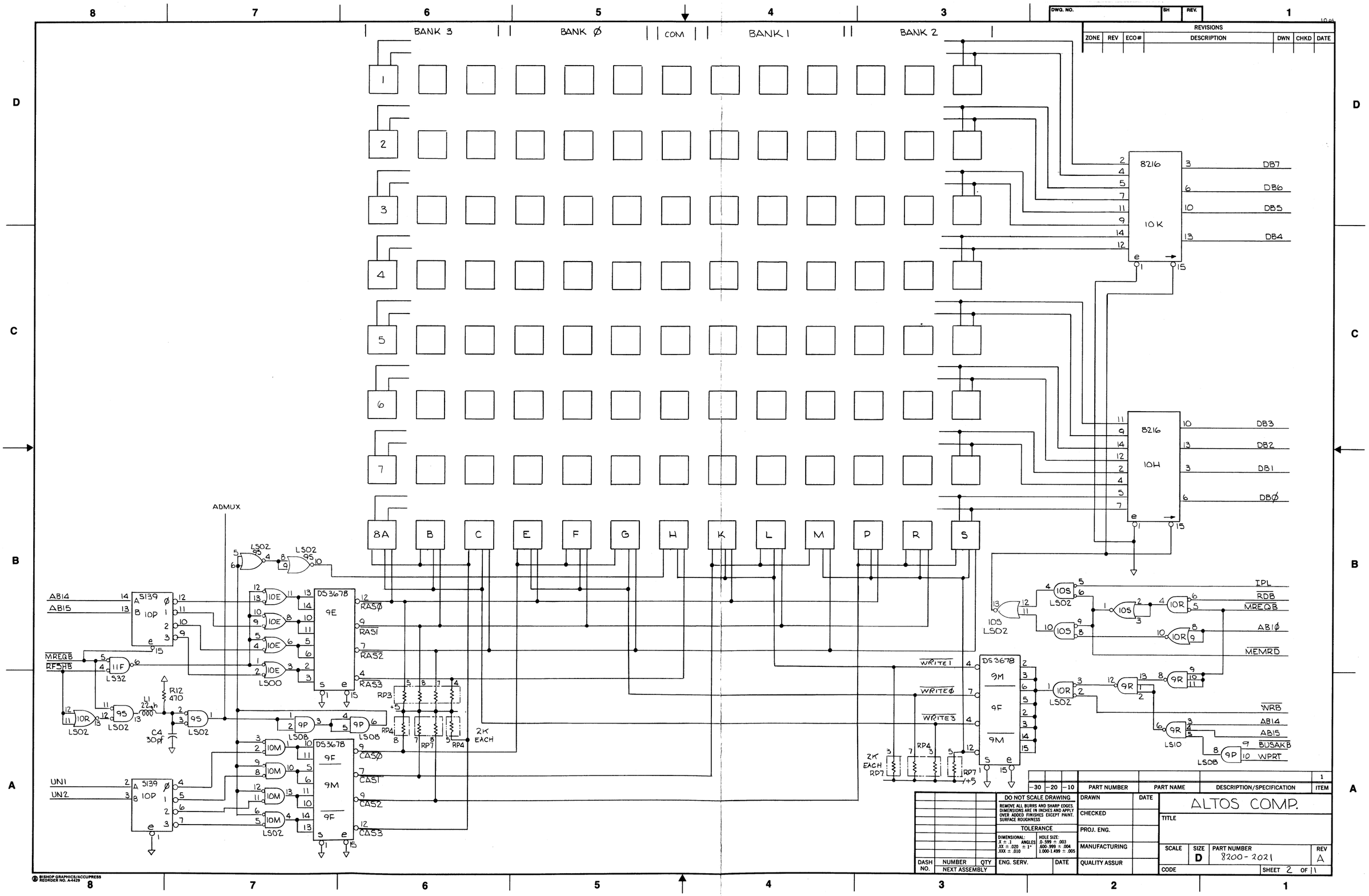

DWG. NO.	SH	REV.

REVISIONS

ZONE	REV	ECO#	DESCRIPTION	DWN	CHKD	DATE

-30	-20	-10	PART NUMBER	PART NAME	DESCRIPTION/SPECIFICATION	ITEM
						1

DO NOT SCALE DRAWING

REMOVE ALL BURRS AND SHARP EDGES. DIMENSIONS ARE IN INCHES AND APPLY OVER ADDED FINISHES EXCEPT PAINT. SURFACE ROUGHNESS

TOLERANCE

DIMENSIONAL: .X ± .1 .XX ± .020 .XXX ± .010 ANGLES ± 1° HOLE SIZE: .0-.599 ± .003 .600-.999 ± .004 1.000-1.499 ± .005

DASH NO.	NUMBER	QTY
	NEXT ASSEMBLY	

ENG. SERV. | DATE

DRAWN | DATE

CHECKED

PROJ. ENG.

MANUFACTURING

QUALITY ASSUR

ALTOS COMP.

TITLE

SCALE | SIZE D | PART NUMBER 8200-2021 | REV A

CODE | SHEET 2 OF 11

BISHOP GRAPHICS/ACCUPRESS REORDER NO. A-4429

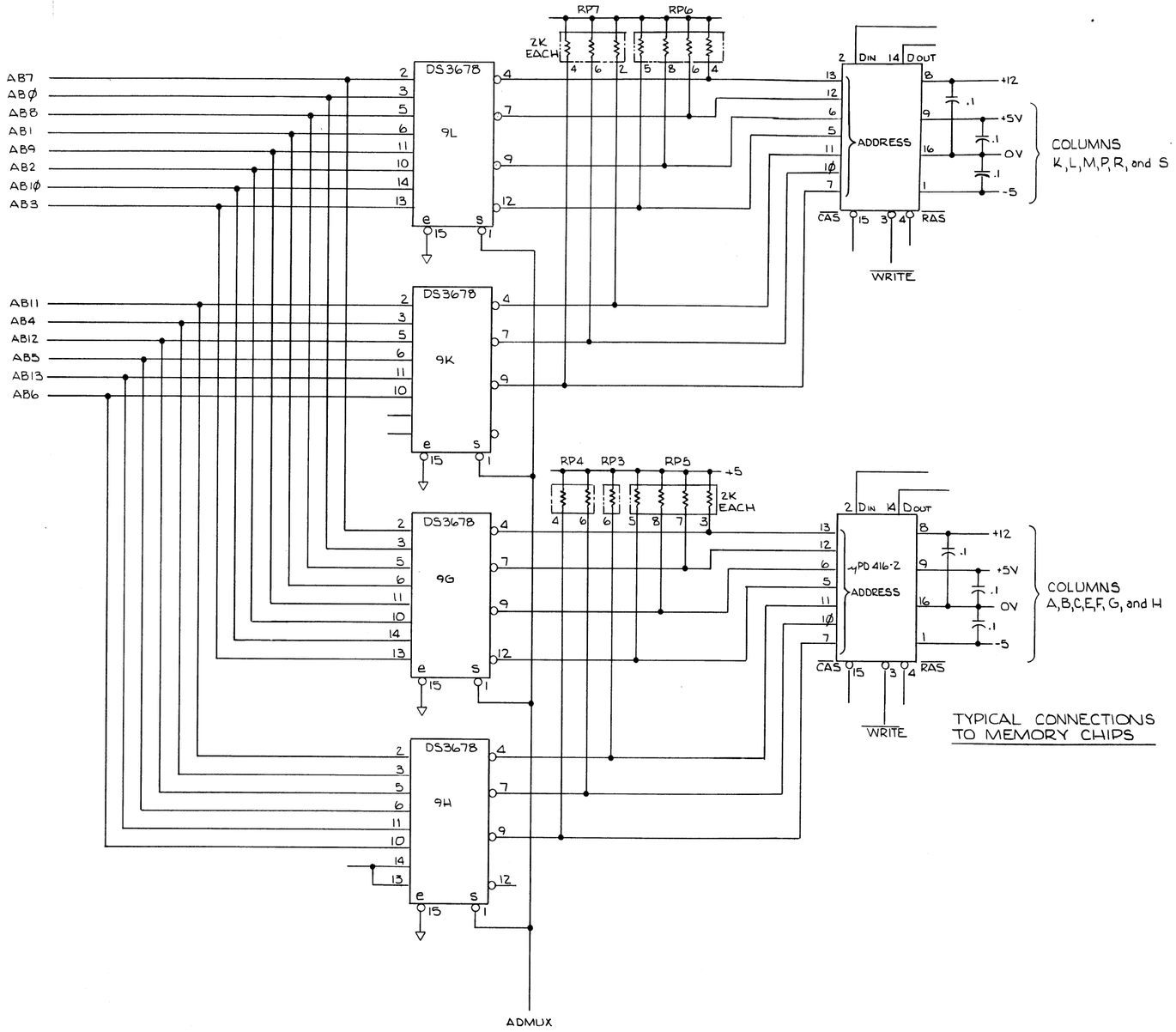

TYPICAL CONNECTIONS TO MEMORY CHIPS

DWG. NO.	SH	REV.

REVISIONS

ZONE	REV	ECO#	DESCRIPTION	DWN	CHKD	DATE

DASH NO.	NUMBER	QTY
	NEXT ASSEMBLY	

											1
-50	-40	-30	-20	-10	PART NUMBER	PART NAME	DESCRIPTION/SPECIFICATION	ITEM

DO NOT SCALE DRAWING

REMOVE ALL BURRS AND SHARP EDGES. DIMENSIONS ARE IN INCHES AND APPLY OVER ADDED FINISHES EXCEPT PAINT. SURFACE ROUGHNESS

TOLERANCE

DIMENSIONAL: X ± .1, XX ± .020, XXX ± .010
ANGLES ± 1°
HOLE SIZE: 0-.599 ± .003, .600-.999 ± .004, 1.000-1.499 ± .005

ENG. SERV.	DATE

DRAWN	DATE
CHECKED	
PROJ. ENG.	
MANUFACTURING	
QUALITY ASSUR	

ALTOS COMP.

TITLE

SCALE	SIZE	PART NUMBER	REV
	D	8200-2021	A

CODE

SHEET 3 OF 11

BISHOP GRAPHICS/ACCUPRESS REORDER NO. A-4429

DWG. NO.	SH	REV.

REVISIONS

ZONE	REV	ECO#	DESCRIPTION	DWN	CHKD	DATE

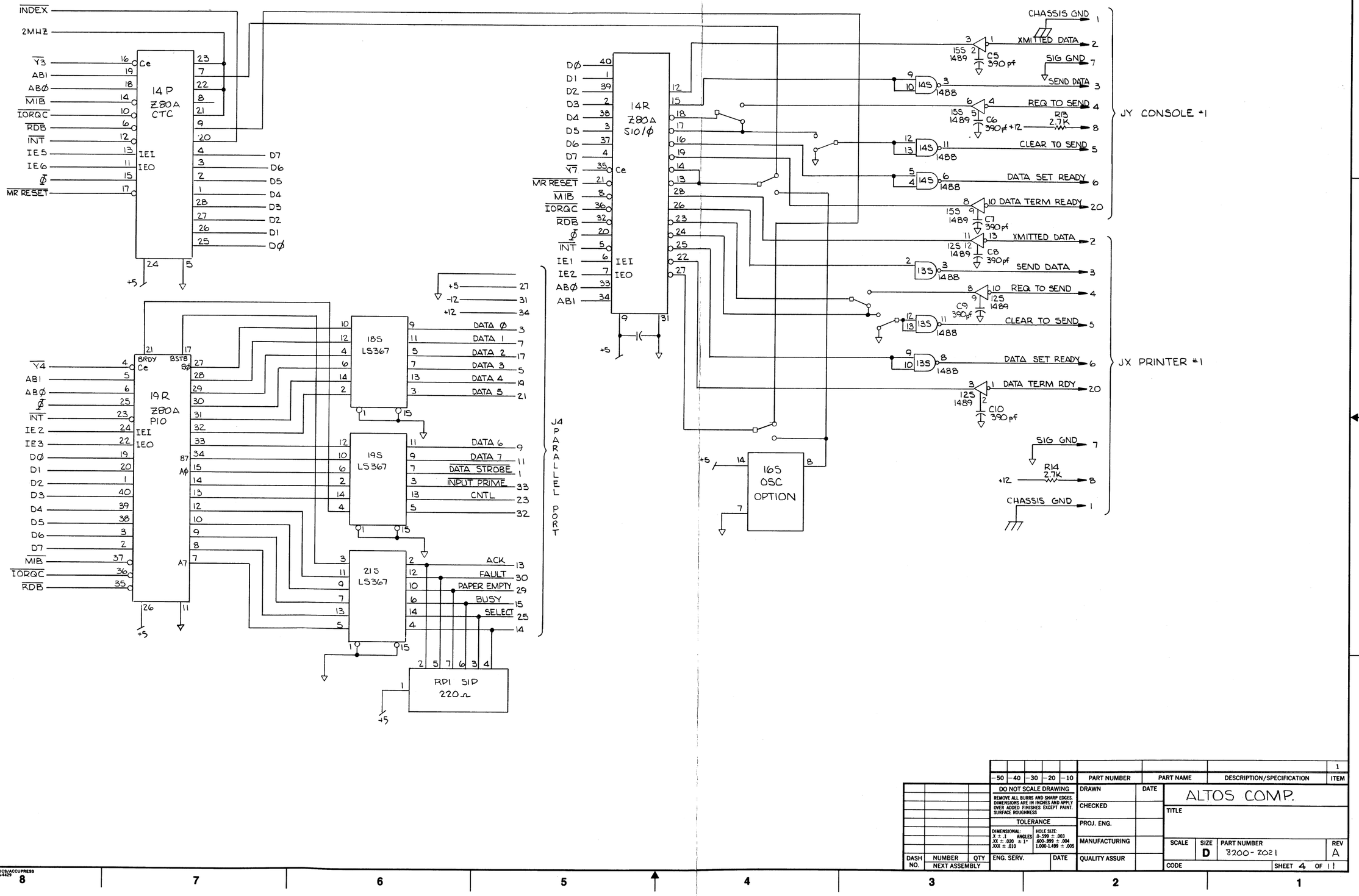

DASH NO.	NUMBER	NEXT ASSEMBLY	QTY

DO NOT SCALE DRAWING

REMOVE ALL BURRS AND SHARP EDGES. DIMENSIONS ARE IN INCHES AND APPLY OVER ADDED FINISHES EXCEPT PAINT. SURFACE ROUGHNESS

TOLERANCE

DIMENSIONAL: X ± .1, .XX ± .020 ± 1°, .XXX ± .010 — ANGLES — HOLE SIZE: .0-.599 ± .003, .600-.999 ± .004, 1.000-1.499 ± .005

ENG. SERV. — DATE

-50	-40	-30	-20	-10	PART NUMBER	PART NAME	DESCRIPTION/SPECIFICATION	ITEM
								1

DRAWN — DATE

CHECKED

PROJ. ENG.

MANUFACTURING

QUALITY ASSUR

ALTOS COMP.

TITLE

SCALE	SIZE	PART NUMBER	REV
	D	8200-2021	A

CODE — SHEET 4 OF 11

BISHOP GRAPHICS/ACCUPRESS REORDER NO. A-4429

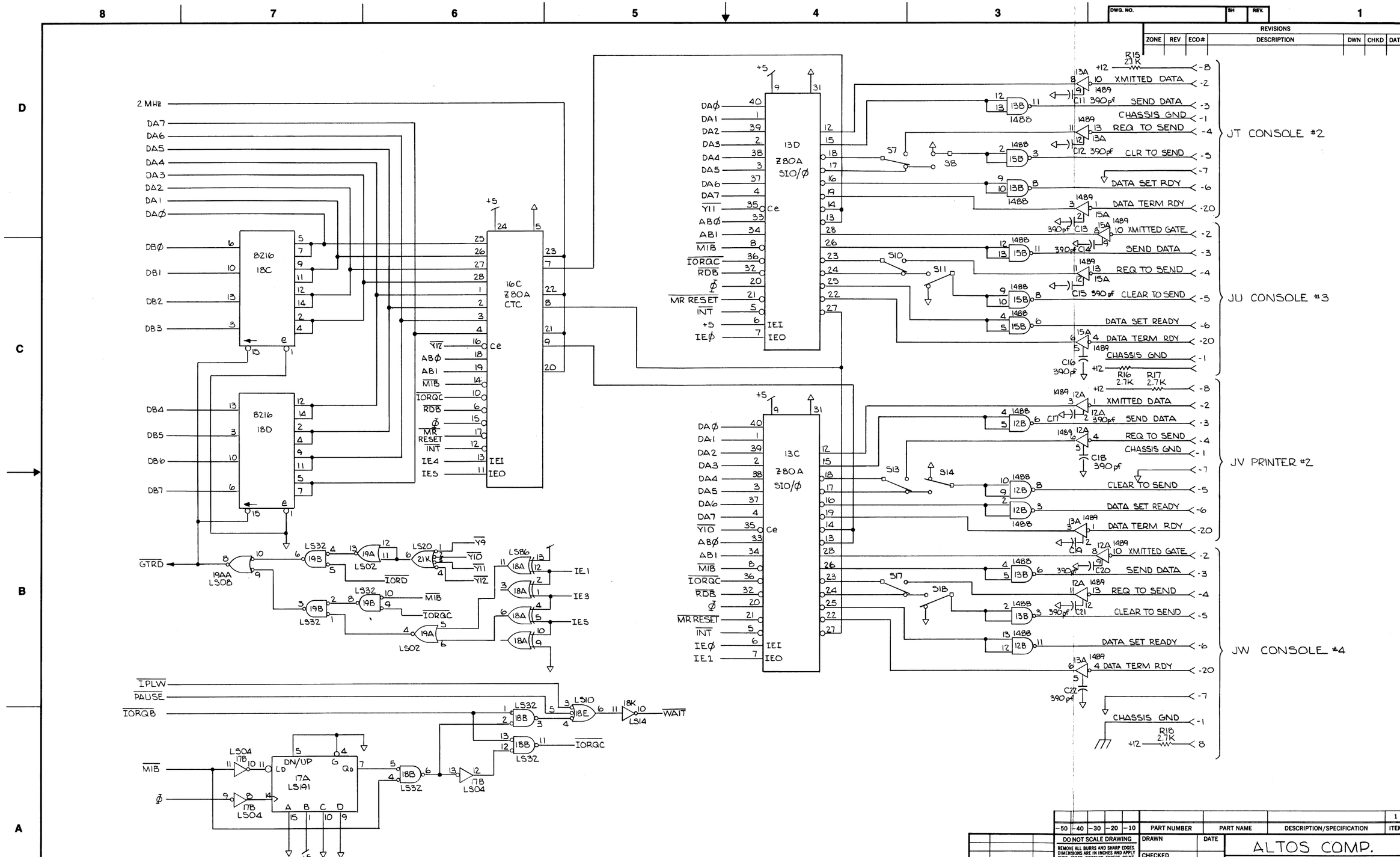

DWG. NO.	SH	REV.

REVISIONS

ZONE	REV	ECO#	DESCRIPTION	DWN	CHKD	DATE

-50	-40	-30	-20	-10	PART NUMBER	PART NAME	DESCRIPTION/SPECIFICATION	ITEM
								1

DO NOT SCALE DRAWING

REMOVE ALL BURRS AND SHARP EDGES. DIMENSIONS ARE IN INCHES AND APPLY OVER ADDED FINISHES EXCEPT PAINT. SURFACE ROUGHNESS

TOLERANCE

DIMENSIONAL: .X ± .1 .XX ± .020 .XXX ± .010 ANGLES ± 1° HOLE SIZE: .0-.599 ± .003 .600-.999 ± .004 1.000-1.499 ± .005

DASH NO.	NUMBER	QTY
	NEXT ASSEMBLY	

ENG. SERV. DATE

DRAWN DATE

CHECKED

PROJ. ENG.

MANUFACTURING

QUALITY ASSUR

ALTOS COMP.

TITLE

SCALE	SIZE	PART NUMBER	REV
	D	8200-2021	A

CODE

SHEET 5 OF 11

BISHOP GRAPHICS/ACCUPRESS REORDER NO. A-4429

DWG. NO.	SH	REV.

REVISIONS

ZONE	REV	ECO#	DESCRIPTION	DWN	CHKD	DATE

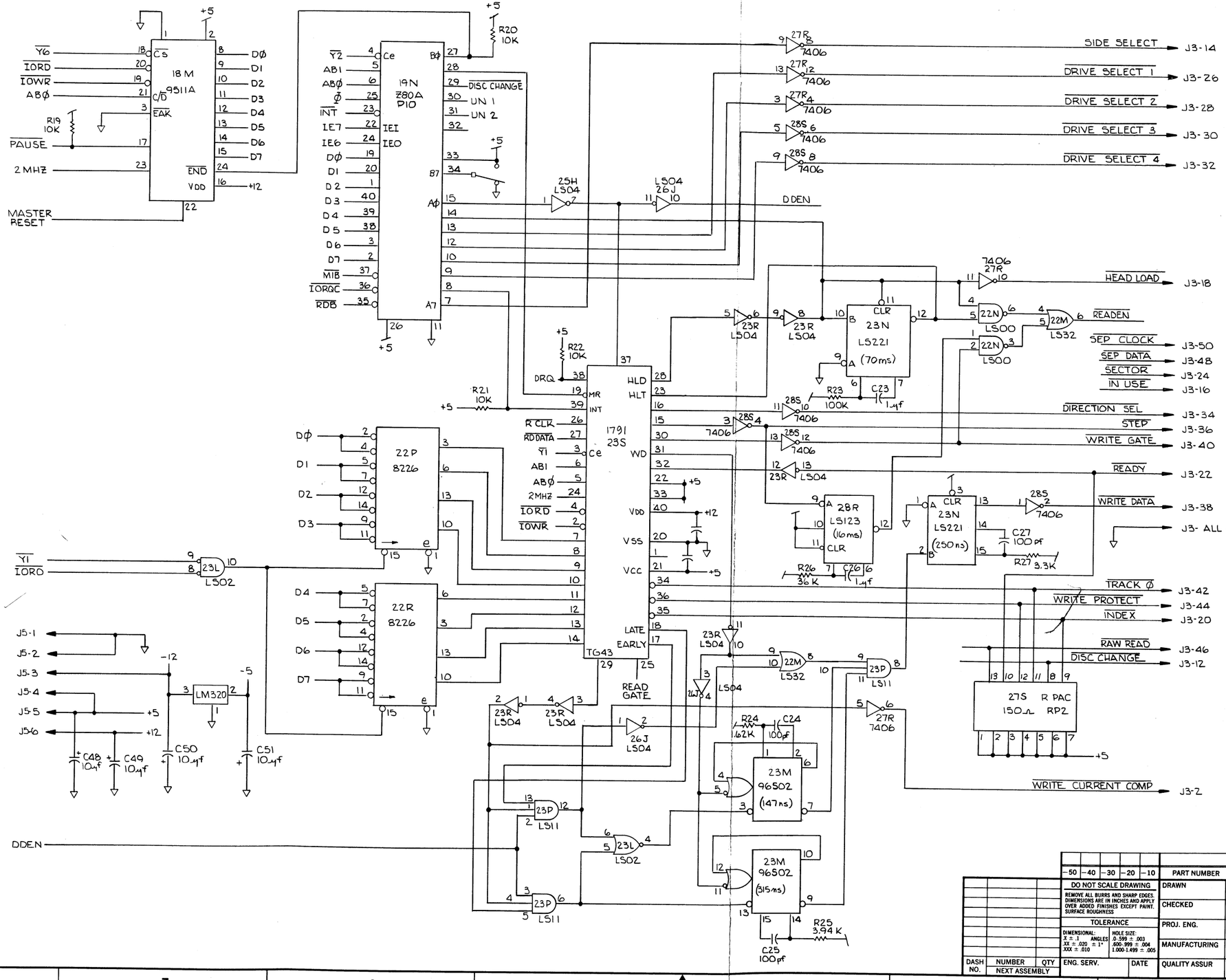

| | | |

DWG. NO.	SH	REV.

REVISIONS

ZONE	REV	ECO#	DESCRIPTION	DWN	CHKD	DATE

1MHZ
RAW READ
READ GATE
D DEN
READ EN
CLK A
CLK B
CLK A (FM)
CLK B (MFM)
RCLK
RD DATA
+5
L2 22μh
C33 47/6
C34 .1μf
D1 IN4148
D2 IN4148
D3 IN4148
R30 3.9K
R31 3.9K
R32 680
R33 100
R34 20K
R35 1K
R36 1K
R37 1K
R38 1K
C30 .01
C52 .1
C32 .001
C35 31pf
C36 .01μf
Q4 2N2222
Q5 2N2222
C28 200pf
R28 3.33K
C29 250pf
R29 5.62K
C37 330
R39 15K
R40 4.25K
C38 100pf
26M LS74
26N LS74
26L LS74
Z5N LS74
Z7P SI24
28M LS221 (500ns)
28M LS221 (1μs)
27J LS123 (2.5μs)
27J LS123 (250ns)
28J LS157
28L LS193
28N LS193
27L LS175
Z7M LS51
26K LS02
28K LS00
25M LS32
27N LS86
27K LS04
26J LS04

| | | | | | |

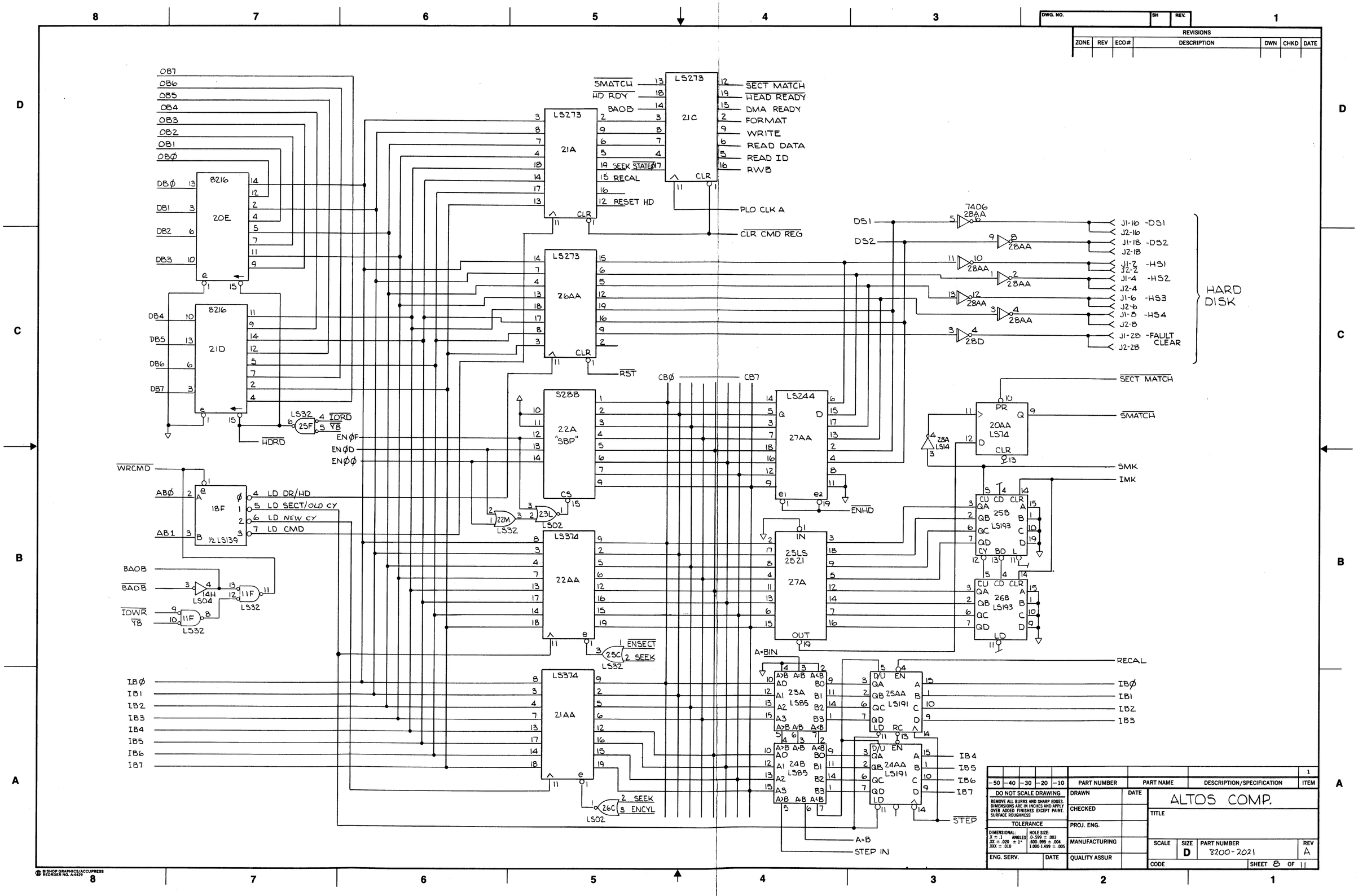

DWG. NO.
SH
REV.
REVISIONS
ZONE
REV
ECO#
DESCRIPTION
DWN
CHKD
DATE
OB7
OB6
OB5
OB4
OB3
OB2
OB1
OBØ
DBØ
DB1
DB2
DB3
DB4
DB5
DB6
DB7
8216
20E
21D
LS32
25F
IORD
YB
HDRD
WRCMD
ABØ
AB1
18F
½ LS139
LD DR/HD
LD SECT/OLD CY
LD NEW CY
LD CMD
BAOB
BAOB
IOWR
YB
14H
LS04
11F
LS32
IBØ
IB1
IB2
IB3
IB4
IB5
IB6
IB7
LS273
21A
21C
26AA
SMATCH
HD RDY
BAOB
SEEK
STATEØ
RECAL
RESET HD
SECT MATCH
HEAD READY
DMA READY
FORMAT
WRITE
READ DATA
READ ID
RWB
PLO CLK A
CLR CMD REG
RST
S288
22A
"SBP"
CBØ
CB7
LS244
27AA
ENHD
LS374
22AA
25LS
2521
27A
ENSECT
SEEK
21AA
ENCYL
A=BIN
23A
LS85
24B
LS85
25AA
LS191
24AA
LS191
A=B
STEP IN
STEP
7406
28AA
28D
DS1
DS2
J1-16 -DS1
J2-16
J1-18 -DS2
J2-18
J1-2 -HS1
J2-2
J1-4 -HS2
J2-4
J1-6 -HS3
J2-6
J1-8 -HS4
J2-8
J1-28 -FAULT CLEAR
J2-28
HARD DISK
20AA
LS74
28A
LS14
SMK
IMK
25B
LS193
26B
LS193
RECAL
DO NOT SCALE DRAWING
REMOVE ALL BURRS AND SHARP EDGES. DIMENSIONS ARE IN INCHES AND APPLY OVER ADDED FINISHES EXCEPT PAINT. SURFACE ROUGHNESS
TOLERANCE
DIMENSIONAL: X ± .1 ANGLES .XX ± .020 ± 1° .XXX ± .010
HOLE SIZE: .0-.599 ± .003 .600-.999 ± .004 1.000-1.499 ± .005
ENG. SERV.
DATE
PART NUMBER
PART NAME
DESCRIPTION/SPECIFICATION
ITEM
DRAWN
CHECKED
PROJ. ENG.
MANUFACTURING
QUALITY ASSUR
ALTOS COMP.
TITLE
SCALE
SIZE
D
PART NUMBER
8200-2021
REV
A
CODE
SHEET 8 OF 11
BISHOP GRAPHICS/ACCUPRESS REORDER NO. A-4429

DWG. NO.	SH	REV.

REVISIONS

ZONE	REV	ECO#	DESCRIPTION	DWN	CHKD	DATE

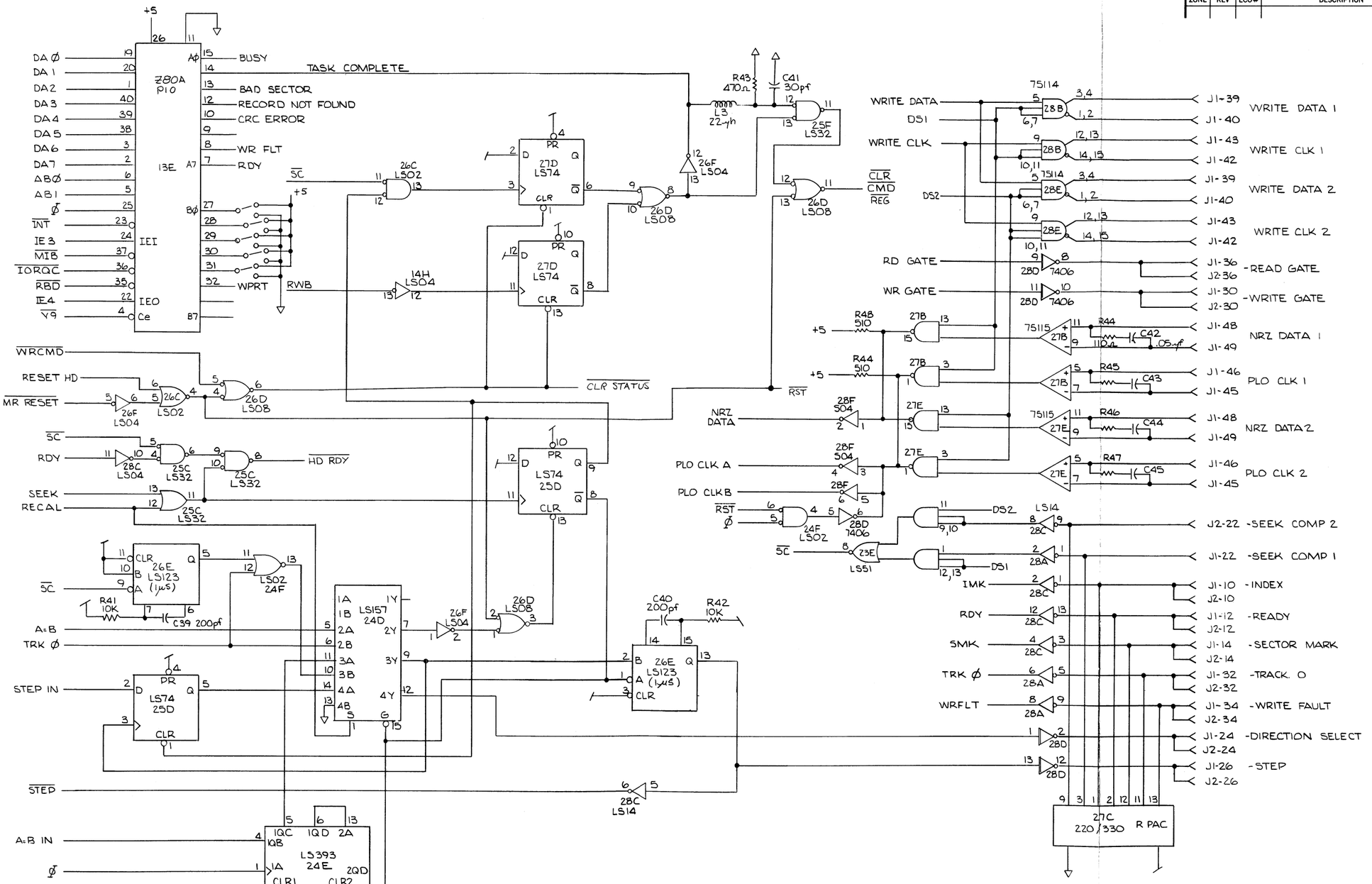

-50	-40	-30	-20	-10	PART NUMBER	PART NAME	DESCRIPTION/SPECIFICATION	ITEM
								1

DO NOT SCALE DRAWING

REMOVE ALL BURRS AND SHARP EDGES. DIMENSIONS ARE IN INCHES AND APPLY OVER ADDED FINISHES EXCEPT PAINT. SURFACE ROUGHNESS

TOLERANCE

DIMENSIONAL: X ± .1 ANGLES; XX ± .020 ± 1°; XXX ± .010

HOLE SIZE: .0-.599 ± .003; .600-.999 ± .004; 1.000-1.499 ± .005

DASH NO.	NUMBER	QTY
	NEXT ASSEMBLY	

		DATE
ENG. SERV.		
DRAWN		
CHECKED		
PROJ. ENG.		
MANUFACTURING		
QUALITY ASSUR		

ALTOS COMP

TITLE

SCALE	SIZE	PART NUMBER	REV
	D	8200-2021	A

CODE | SHEET 9 OF 11

BISHOP GRAPHICS/ACCUPRESS REORDER NO. A4429

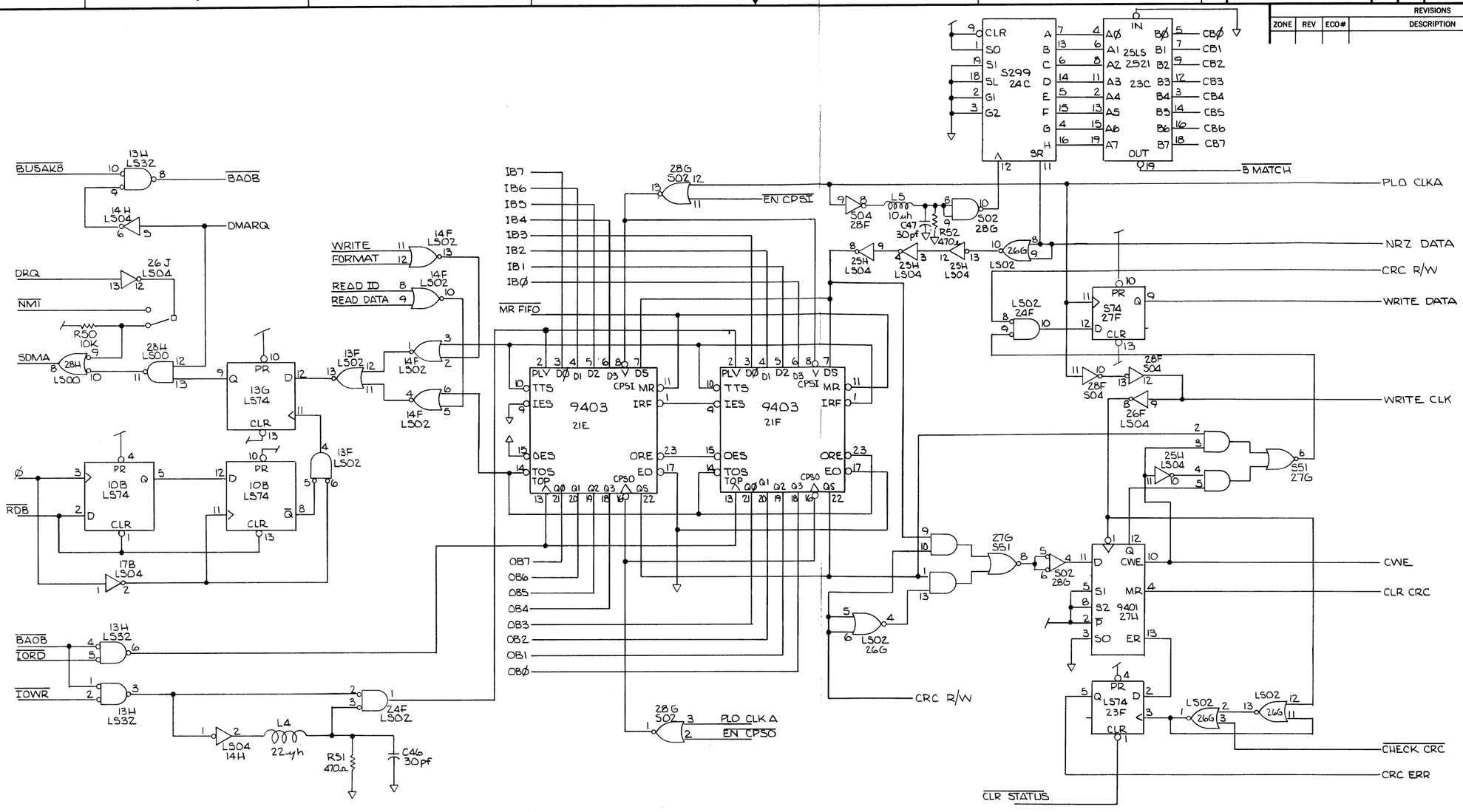

DWG. NO.	SH	REV.

REVISIONS

ZONE	REV	ECO#	DESCRIPTION	DWN	CHKD	DATE

DASH NO.	NUMBER	QTY
	NEXT ASSEMBLY	

DO NOT SCALE DRAWING

REMOVE ALL BURRS AND SHARP EDGES. DIMENSIONS ARE IN INCHES AND APPLY OVER ADDED FINISHES EXCEPT PAINT. SURFACE ROUGHNESS

TOLERANCE

DIMENSIONAL: X ± .1, XX ± .020, .XXX ± .010; ANGLES ± 1°

HOLE SIZE: .0-.599 ± .003, .600-.999 ± .004, 1.000-1.499 ± .005

ENG. SERV. | DATE

-50	-40	-30	-20	-10	PART NUMBER	PART NAME	DESCRIPTION/SPECIFICATION	ITEM
								1

DRAWN	Chamusan
DATE	2-30-80
CHECKED	
PROJ. ENG.	
MANUFACTURING	
QUALITY ASSUR	

TITLE: ALTOS COMP.

SCALE	SIZE	PART NUMBER	REV
	D	8200-2021	A

CODE | SHEET 10 OF 11

BISHOP GRAPHICS/ACCUPRESS REORDER NO. A-4429

DWG. NO.	SH	REV.

REVISIONS

ZONE	REV	ECO#	DESCRIPTION	DWN	CHKD	DATE

PLO CLK B

PLA 82S100 17F

B MATCH
SECT MATCH
DMA READY
4 REVS
BAD SECT / CRC ERR → 25F LS32 → HEADER ERROR
HEAD READY
READ DATA
READ ID
WRITE
FORMAT
COUNT = ϕ

INCREMENT
JUMP
LOAD COUNTER
BUSY
CLR
BAD SECT
NO AM

S288 20G "CP1"
EN CYL
EN HD
EN SECT
EN ØD
EN ØF
EN ØØ
EN CPSO
EN CPSI

S288 24G "CP2"
CWE
CLR CRC
CHECK CRC
RD GATE
WR GATE
CRC R/W
MR FIFO
DMARQ

S163 20H
S163 17H

LS04 25H

S163 21H
LS163 22H
LS163 23H
LS163 24H

RST → LS08 16H

LS74 15F
PR
BAD SECTOR
PLO CLK B
CLR STATUS

STATE ϕ
4 REVS
IMK
LS191 15G
RECORD NOT FOUND

S288 18H "JAP"
S288 22G "CLD"

LOAD COUNTER
PLO CLK B
26H LS74

LS08 16H

| | | | | | |

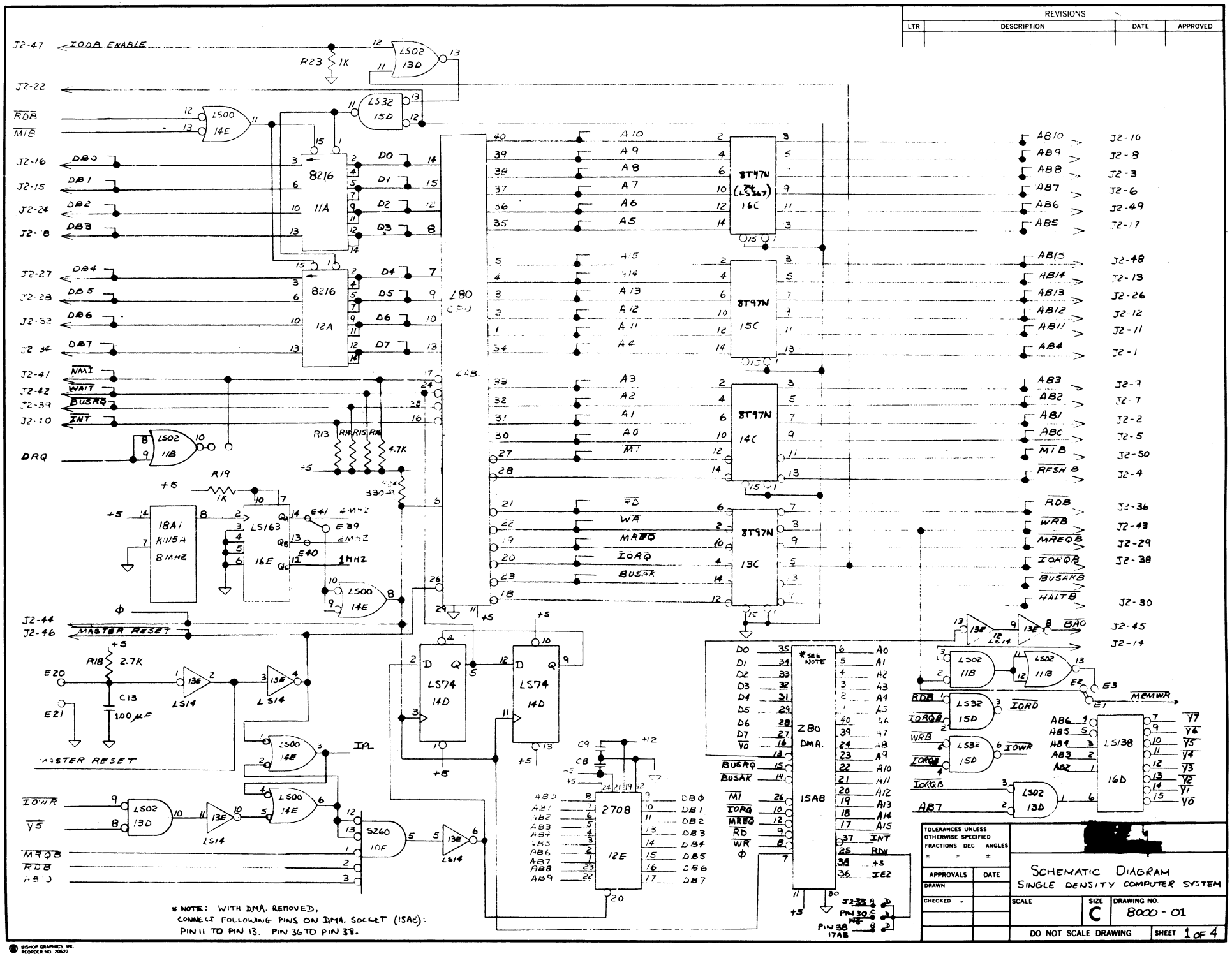
REVISIONS
LTR
DESCRIPTION
DATE
APPROVED
J2-47
IODB ENABLE
R23 1K
LS02 13D
J2-22
RDB
MIB
LS00 14E
LS32 15D
J2-16
DB0
J2-15
DB1
J2-24
DB2
J2-18
DB3
8216 11A
J2-27
DB4
J2-28
DB5
J2-32
DB6
J2-34
DB7
8216 12A
Z80 CPU
J2-41
NMI
J2-42
WAIT
J2-39
BUSRQ
J2-40
INT
DRQ
LS02 11B
R13
R14
R15
R16
4.7K
330Ω
R19 1K
18A1 K1115A 8MHZ
LS163 16E
E41
E39
E40
4MHZ
2MHZ
1MHZ
LS00 14E
J2-44
J2-46
MASTER RESET
R18 2.7K
E20
E21
C13 100μF
LS14
LS74 14D
IPL
IOWR
Y5
MRQB
RDB
S260 10F
2708 12E
8T97N (LS267) 16C
8T97N 15C
8T97N 14C
8T97N 13C
A10
A9
A8
A7
A6
A5
A15
A14
A13
A12
A11
A4
A3
A2
A1
A0
M1
RD
WR
MREQ
IORQ
BUSAK
AB10
AB9
AB8
AB7
AB6
AB5
AB15
AB14
AB13
AB12
AB11
AB4
AB3
AB2
AB1
ABC
MIB
RFSH B
RDB
WRB
MREQB
IORQB
BUSAKB
HALTB
BAO
J2-10
J2-8
J2-3
J2-6
J2-49
J2-17
J2-48
J2-13
J2-26
J2-12
J2-11
J2-1
J2-9
J2-7
J2-2
J2-5
J2-50
J2-4
J2-36
J2-43
J2-29
J2-38
J2-30
J2-45
J2-14
*SEE NOTE
Z80 DMA. 15AB
BUSRQ
BUSAK
MI
IORQ
MREQ
RD
WR
INT
RDY
+5
IE2
LS02 11B
LS32 15D
IORD
IOWR
MEMWR
LS138 16D
Y7
Y6
Y5
Y4
Y3
Y2
Y1
Y0
AB7
PIN 38 17AB
PIN 30
* NOTE: WITH DMA. REMOVED, CONNECT FOLLOWING PINS ON DMA. SOCKET (15AB): PIN 11 TO PIN 13. PIN 36 TO PIN 38.
TOLERANCES UNLESS OTHERWISE SPECIFIED
FRACTIONS DEC ANGLES
APPROVALS
DATE
DRAWN
CHECKED
SCHEMATIC DIAGRAM
SINGLE DENSITY COMPUTER SYSTEM
SCALE
SIZE C
DRAWING NO. 8000-01
DO NOT SCALE DRAWING
SHEET 1 OF 4
BISHOP GRAPHICS, INC. REORDER NO. 20622

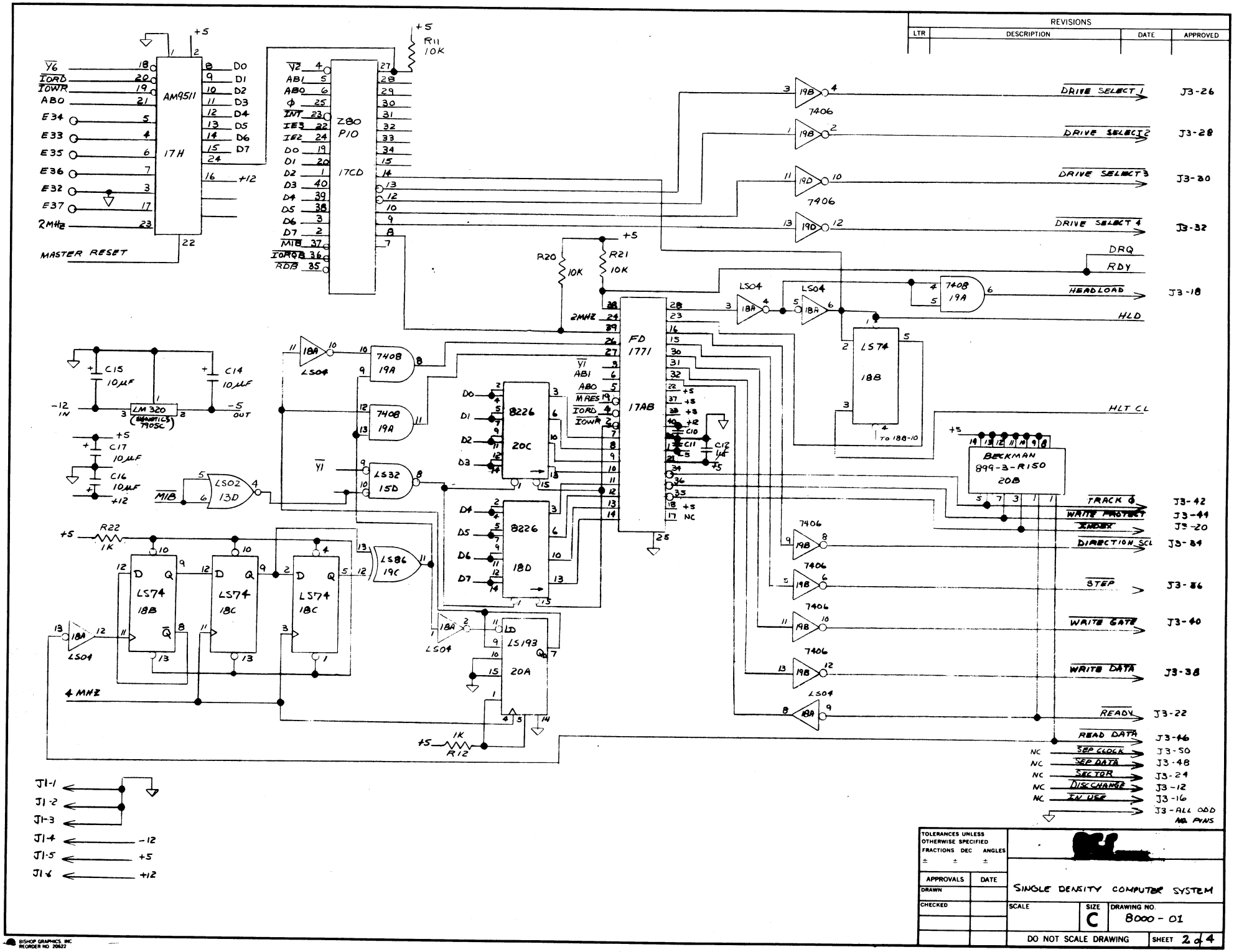
REVISIONS
LTR
DESCRIPTION
DATE
APPROVED
AM9511
17H
MASTER RESET
Z80
P10
17CD
R11
10K
R20
10K
R21
10K
FD
1771
17AB
8226
20C
8226
18D
LS74
18B
LS74
18C
LS74
18C
LS74
18B
LS193
20A
LS86
19C
LS32
15D
LS02
13D
LM 320
(SIGNETICS 7905C)
C15
10µF
C14
10µF
C17
10µF
C16
10µF
C10
C11
C12
1µF
R22
1K
R12
1K
4 MHZ
7406
7408
19A
LS04
18A
LS74
18B
TO 18B-10
BECKMAN
899-3-R150
20B
DRIVE SELECT 1
J3-26
DRIVE SELECT 2
J3-28
DRIVE SELECT 3
J3-30
DRIVE SELECT 4
J3-32
DRQ
RDY
HEADLOAD
J3-18
HLD
HLT CL
TRACK Ø
J3-42
WRITE PROTECT
J3-44
INDEX
J3-20
DIRECTION SCL
J3-34
STEP
J3-36
WRITE GATE
J3-40
WRITE DATA
J3-38
READY
J3-22
READ DATA
J3-46
SEP CLOCK
J3-50
SEP DATA
J3-48
SECTOR
J3-24
DISCHANGE
J3-12
IN USE
J3-16
J3-ALL ODD NO. PINS
J1-1
J1-2
J1-3
J1-4
J1-5
J1-6
-12
+5
+12
TOLERANCES UNLESS OTHERWISE SPECIFIED
FRACTIONS DEC ANGLES
APPROVALS
DATE
DRAWN
CHECKED
SINGLE DENSITY COMPUTER SYSTEM
SCALE
SIZE
C
DRAWING NO.
8000 - 01
DO NOT SCALE DRAWING
SHEET 2 of 4
BISHOP GRAPHICS, INC
REORDER NO 20622

REVISIONS			
LTR	DESCRIPTION	DATE	APPROVED

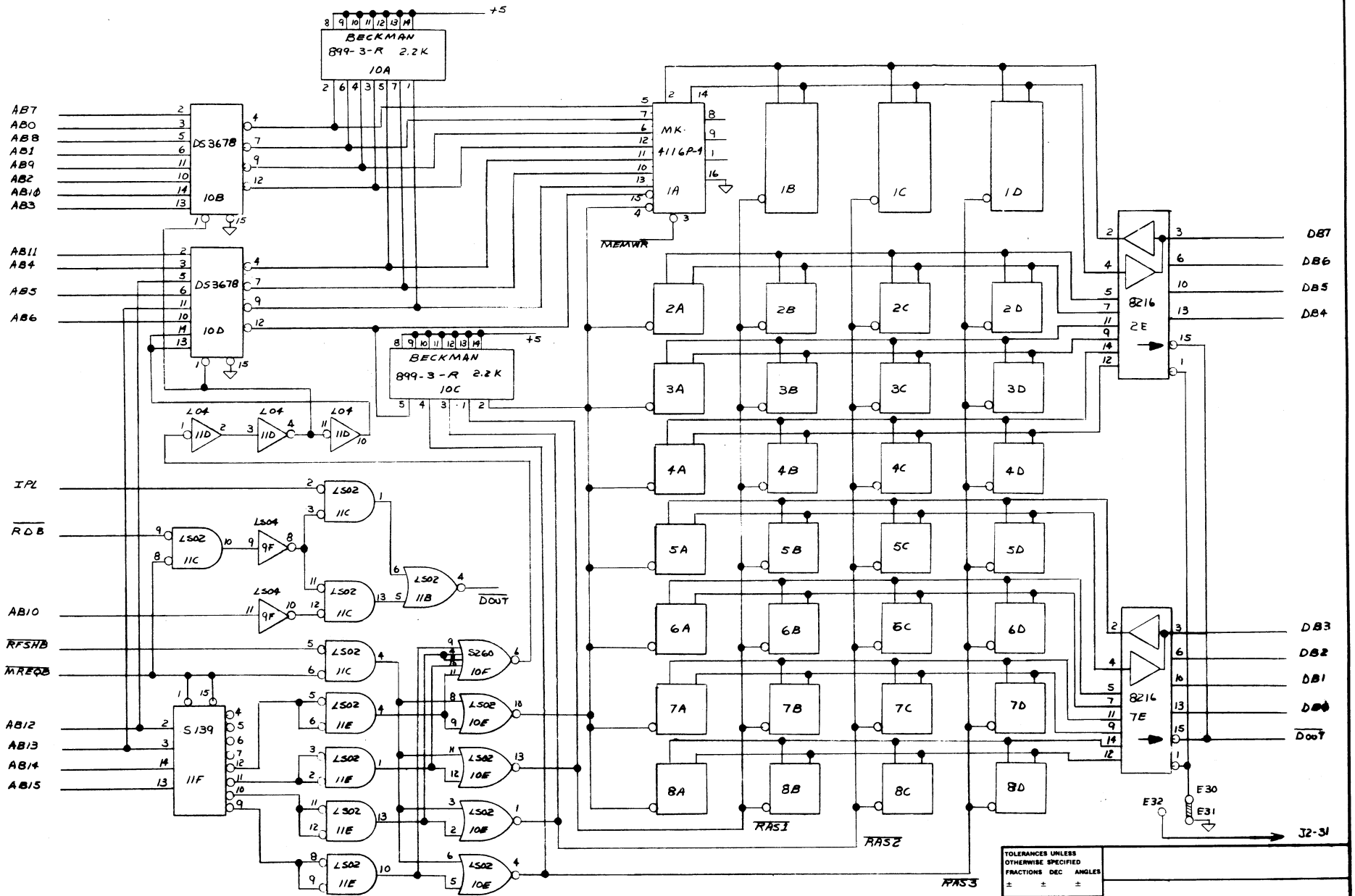

TOLERANCES UNLESS OTHERWISE SPECIFIED		
FRACTIONS	DEC	ANGLES
±	±	±

APPROVALS	DATE
DRAWN	
CHECKED	

SINGLE DENSITY COMPUTER SYSTEM

SCALE	SIZE	DRAWING NO.
	C	8000-01

DO NOT SCALE DRAWING — SHEET 3 of 4

BISHOP GRAPHICS, INC.
REORDER NO. 20822

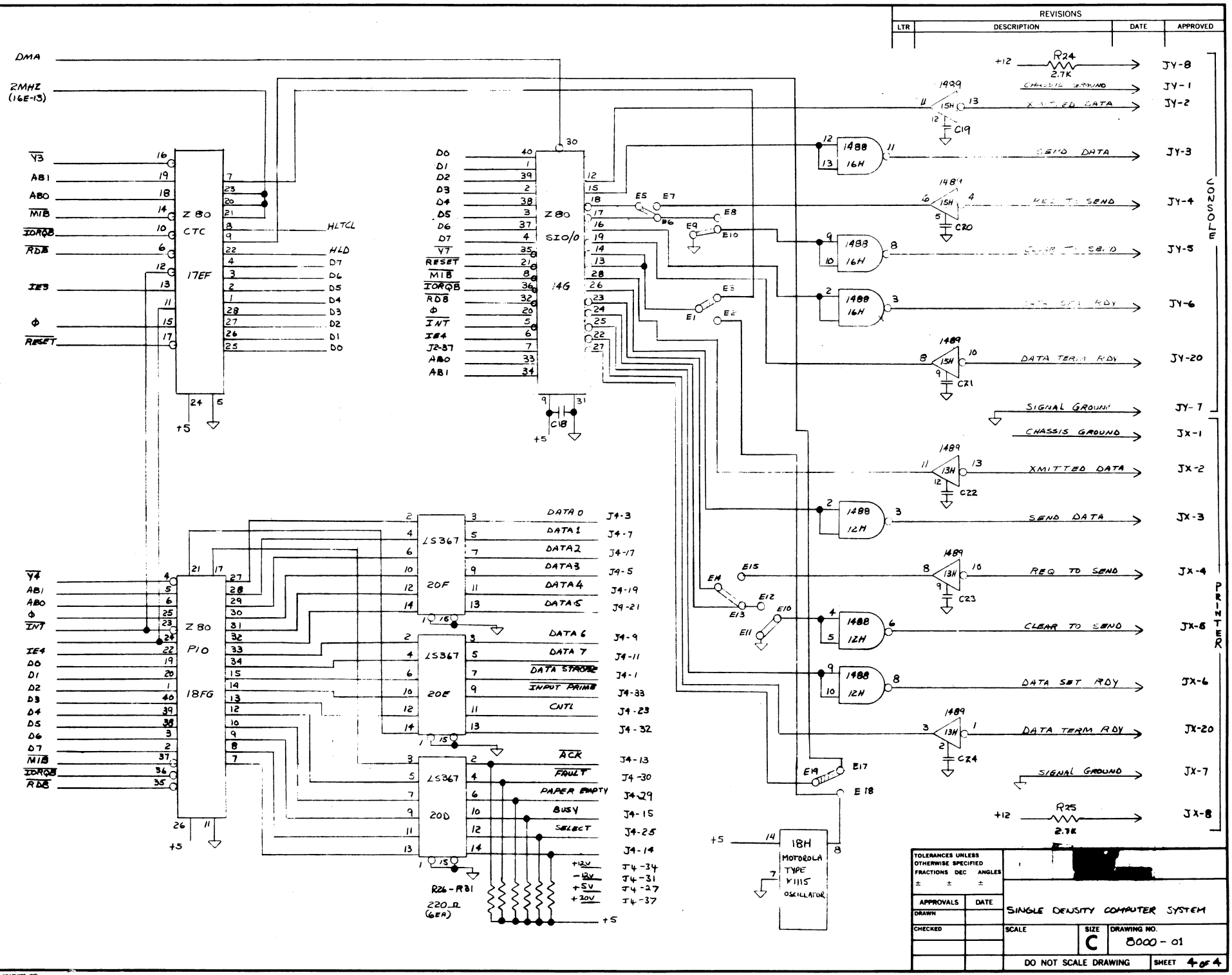
REVISIONS
LTR
DESCRIPTION
DATE
APPROVED
DMA
2MHZ (16E-13)
Z80 CTC 17EF
Z80 SIO/0 14G
Z80 PIO 18FG
74LS367 20F
74LS367 20E
74LS367 20D
18H MOTOROLA TYPE K1115 OSCILLATOR
R24 2.7K
R25 2.7K
R26-R31 220Ω (6EA)
C18
C19
C20
C21
C22
C23
C24
CONSOLE
PRINTER
JY-8
JY-1
JY-2
JY-3
JY-4
JY-5
JY-6
JY-20
JY-7
JX-1
JX-2
JX-3
JX-4
JX-6
JX-6
JX-20
JX-7
JX-8
SIGNAL GROUND
CHASSIS GROUND
XMITTED DATA
SEND DATA
REQ TO SEND
CLEAR TO SEND
DATA SET RDY
DATA TERM RDY
DATA 0
DATA 1
DATA 2
DATA 3
DATA 4
DATA 5
DATA 6
DATA 7
DATA STROBE
INPUT PRIME
CNTL
ACK
FAULT
PAPER EMPTY
BUSY
SELECT
+12V
-12V
+5V
+30V
TOLERANCES UNLESS OTHERWISE SPECIFIED
FRACTIONS DEC ANGLES
APPROVALS DATE
DRAWN
CHECKED
SINGLE DENSITY COMPUTER SYSTEM
SCALE
SIZE C
DRAWING NO. 8000 - 01
DO NOT SCALE DRAWING
SHEET 4 OF 4
BISHOP GRAPHICS, INC REORDER NO 20822

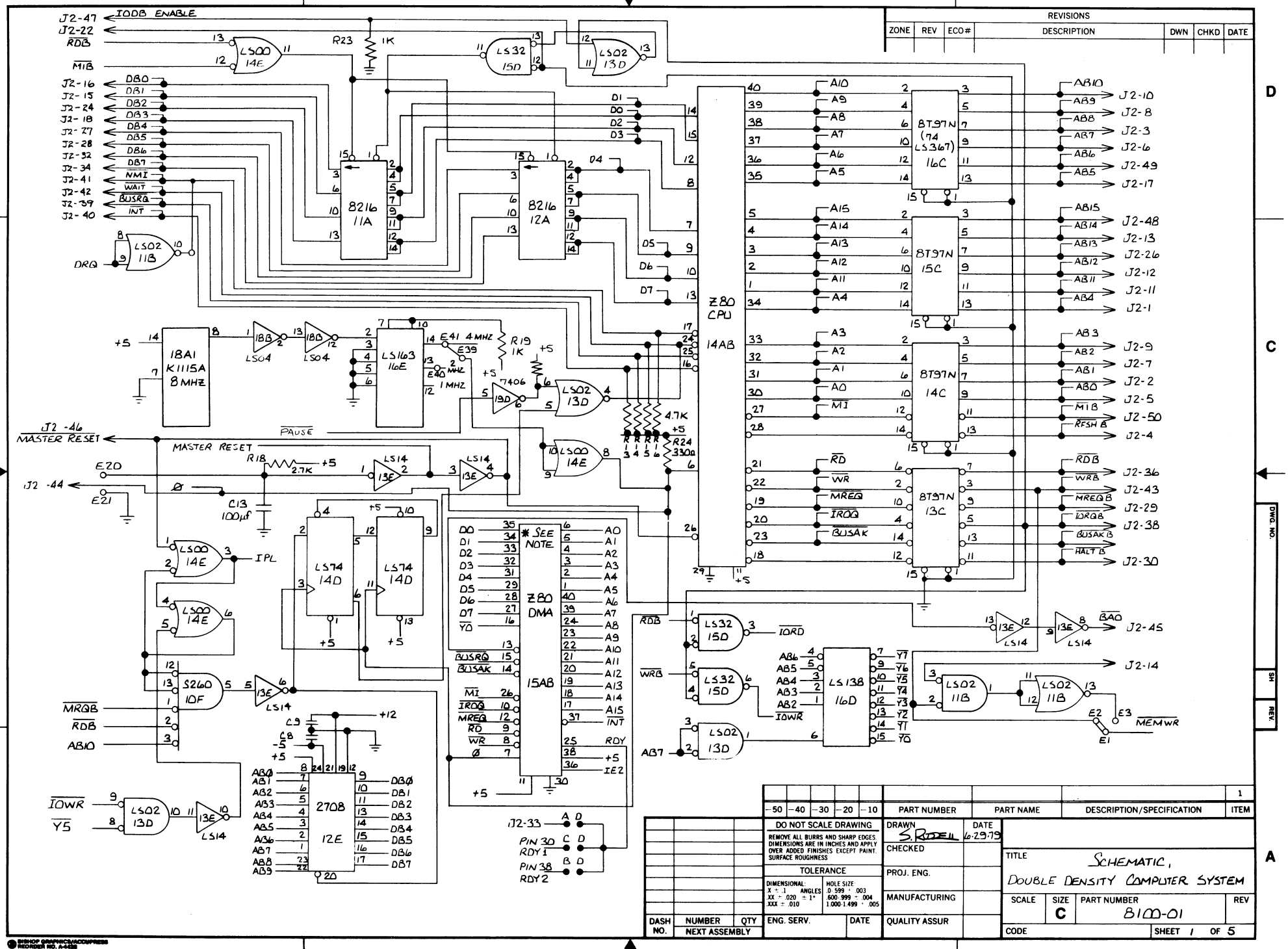
REVISIONS
ZONE | REV | ECO# | DESCRIPTION | DWN | CHKD | DATE
IODB ENABLE
J2-47
J2-22
RDB
MIB
J2-16 DB0
J2-15 DB1
J2-24 DB2
J2-18 DB3
J2-27 DB4
J2-28 DB5
J2-32 DB6
J2-34 DB7
J2-41 NMI
J2-42 WAIT
J2-39 BUSRQ
J2-40 INT
DRQ
R23 1K
LS00 14E
LS32 15D
LS02 13D
LS02 11B
8216 11A
8216 12A
D0 D1 D2 D3 D4 D5 D6 D7
Z80 CPU 14AB
A10 A9 A8 A7 A6 A5 A4 A3 A2 A1 A0 A15 A14 A13 A12 A11
MI
RD WR MREQ IORQ BUSAK
8T97N (74LS367) 16C
8T97N 15C
8T97N 14C
8T97N 13C
AB10 AB9 AB8 AB7 AB6 AB5 AB15 AB14 AB13 AB12 AB11 AB4 AB3 AB2 AB1 AB0 MIB RFSH B
J2-10 J2-8 J2-3 J2-6 J2-49 J2-17 J2-48 J2-13 J2-26 J2-12 J2-11 J2-1 J2-9 J2-7 J2-2 J2-5 J2-50 J2-4
RDB WRB MREQB IORQB BUSAKB HALTB
J2-36 J2-43 J2-29 J2-38 J2-30
18A1 K1115A 8 MHZ
LS04 LS163 16E
E41 4 MHZ E39 2 MHZ E40 1 MHZ
R19 1K
7406
LS02 13D
4.7K R24 330Ω
PAUSE
J2-46 MASTER RESET
MASTER RESET
R18 2.7K
LS14 13E
E20 E21 Ø
J2-44
C13 100µf
LS00 14E
IPL
LS74 14D
S260 10F
MRQB RDB AB10
C9 C8 +12 -5 +5
2708 12E
DB0 DB1 DB2 DB3 DB4 DB5 DB6 DB7
IOWR Y5
LS02 13D
LS14 13E
*SEE NOTE
Z80 DMA 15AB
D0 D1 D2 D3 D4 D5 D6 D7 Y0
BUSRQ BUSAK MI IRQ0 MREQ RD WR Ø
A0 A1 A2 A3 A4 A5 A6 A7 A8 A9 A10 A11 A12 A13 A14 A15 INT RDY +5 IE2
J2-33 PIN 30 RDY1 PIN 38 RDY2
RDB WRB AB7
LS32 15D
LS02 13D
IORD IOWR
AB6 AB5 AB4 AB3 AB2
LS138 16D
Y7 Y6 Y5 Y4 Y3 Y2 Y1 Y0
LS02 11B
E2 E3 E1 MEMWR
BAO
J2-45
J2-14
DO NOT SCALE DRAWING
REMOVE ALL BURRS AND SHARP EDGES. DIMENSIONS ARE IN INCHES AND APPLY OVER ADDED FINISHES EXCEPT PAINT. SURFACE ROUGHNESS
TOLERANCE
DIMENSIONAL: X ± .1 ANGLES .XX ± .020 ± 1° .XXX ± .010
HOLE SIZE .0-.599 + .003 .600-.999 + .004 1.000-1.499 + .005
DASH NO. | NUMBER | QTY
NEXT ASSEMBLY
ENG. SERV. | DATE
PART NUMBER | PART NAME | DESCRIPTION/SPECIFICATION | ITEM
DRAWN S. RODELL DATE 6-29-79
CHECKED
PROJ. ENG.
MANUFACTURING
QUALITY ASSUR
TITLE SCHEMATIC, DOUBLE DENSITY COMPUTER SYSTEM
SCALE | SIZE C | PART NUMBER 810-01 | REV
CODE | SHEET 1 OF 5
DWG NO. | SH | REV.

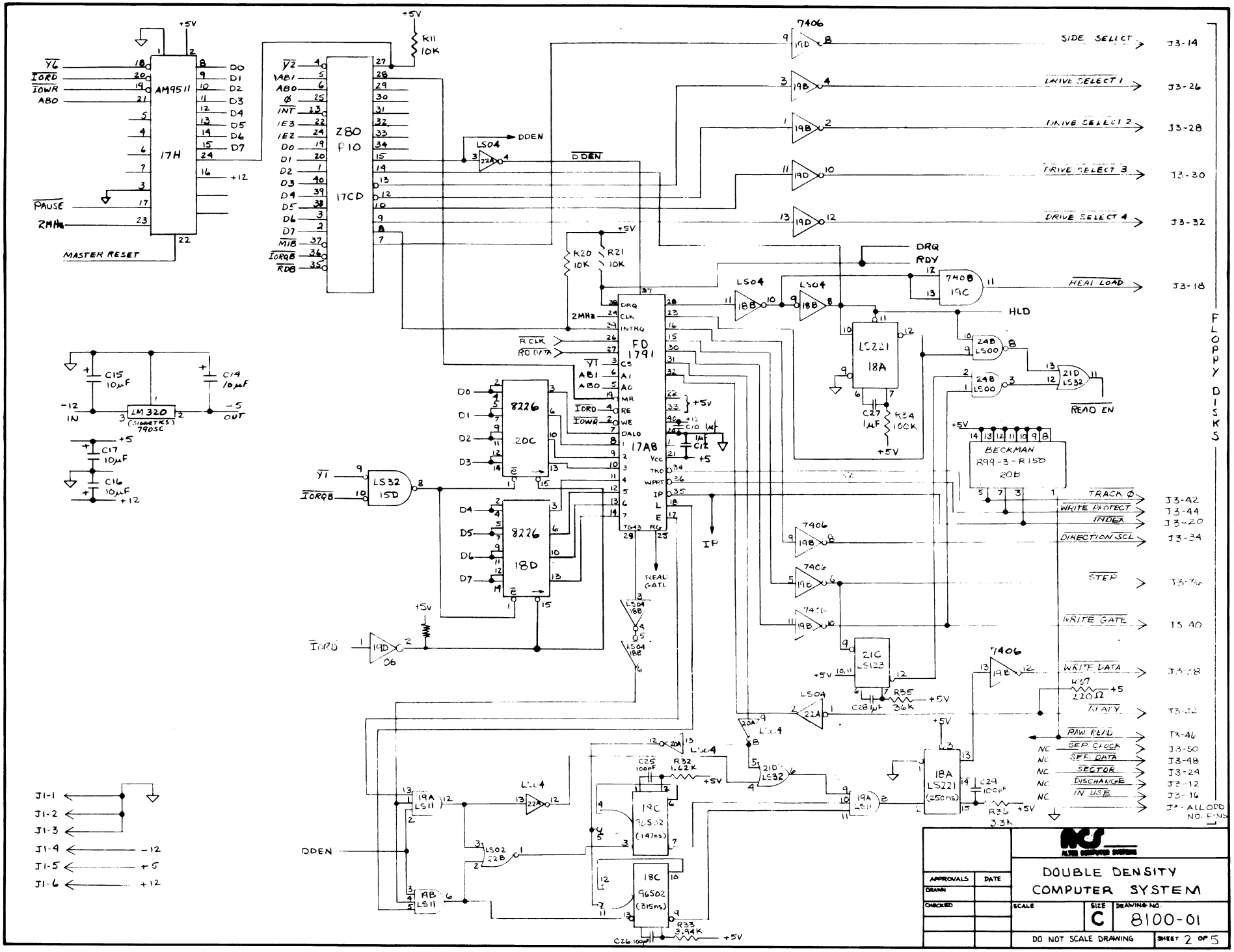

AM9511
17H
MASTER RESET
Z80
P10
17CD
FD
1791
17A8
8226
20C
8226
18D
LS32
15D
LS04
LS221
18A
7408
19C
7406
19D
LS123
21C
LS221
(250ns)
18A
96S02
(147ns)
18C
96S02
(315ns)
LM320
(SIGNETICS)
790SC
BECKMAN
899-3-R150
20B
SIDE SELECT
DRIVE SELECT 1
DRIVE SELECT 2
DRIVE SELECT 3
DRIVE SELECT 4
HEAD LOAD
READ EN
TRACK Ø
WRITE PROTECT
INDEX
DIRECTION SCL
STEP
WRITE GATE
WRITE DATA
READY
RAW READ
SEP. CLOCK
SEP. DATA
SECTOR
DISCHANGE
IN USE
J3-14
J3-26
J3-28
J3-30
J3-32
J3-18
J3-42
J3-44
J3-20
J3-34
J3-36
J3-40
J3-38
J3-22
J3-46
J3-50
J3-48
J3-24
J3-12
J3-16
J3-ALL ODD NO. PINS
FLOPPY DISKS
J1-1
J1-2
J1-3
J1-4
J1-5
J1-6
-12
+5
+12
DDEN
IP
READ GATE
DRQ
RDY
HLD
ALTOS COMPUTER SYSTEMS
APPROVALS
DATE
DRAWN
CHECKED
DOUBLE DENSITY
COMPUTER SYSTEM
SCALE
SIZE
C
DRAWING NO.
8100-01
DO NOT SCALE DRAWING
SHEET 2 OF 5

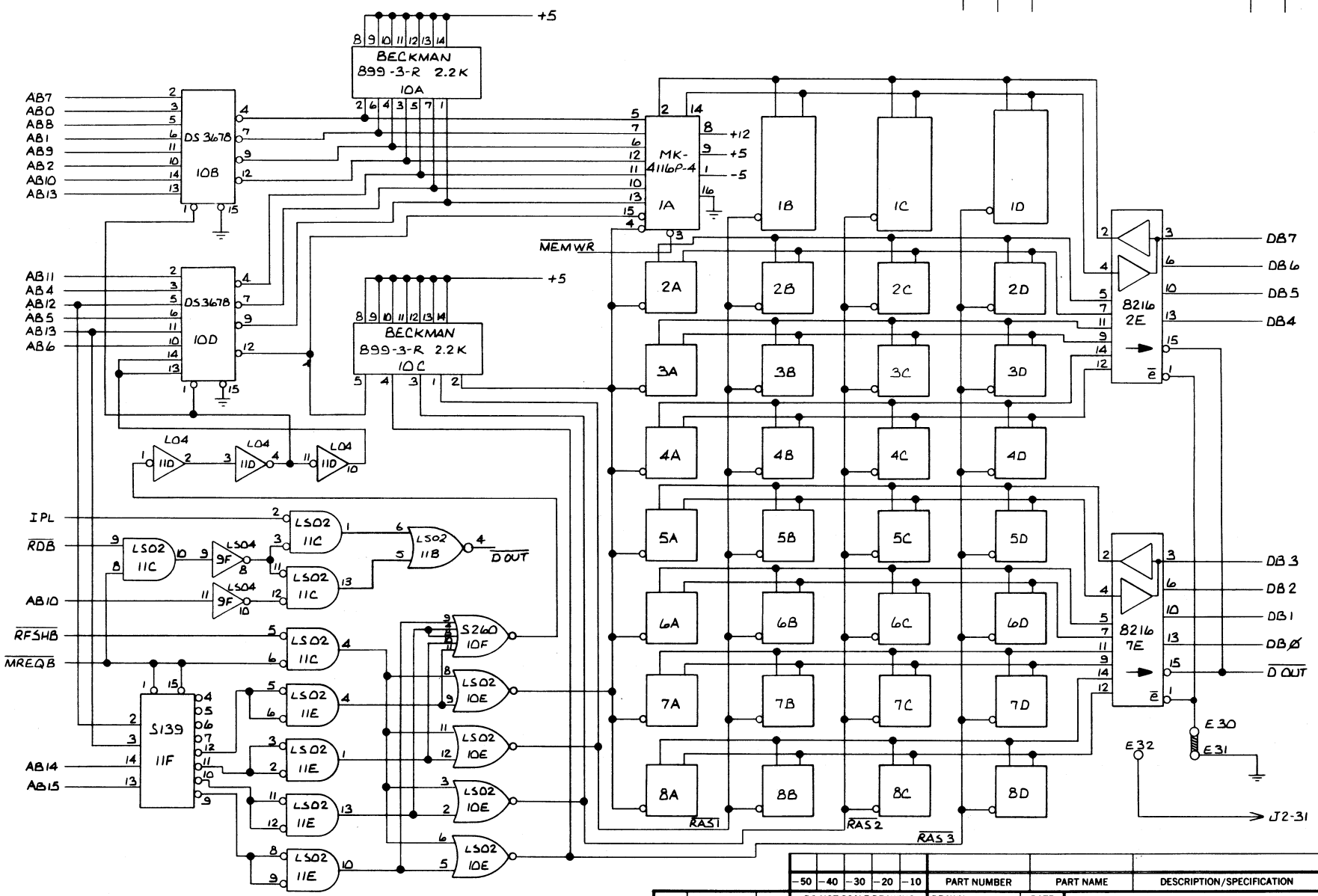

REVISIONS					
REV	ECO#	DESCRIPTION	DWN	CHKD	DATE

DWG. NO. 8000-01 SH. 3 REV.

PART NUMBER	PART NAME	DESCRIPTION/SPECIFICATION	ITEM
			1

DO NOT SCALE DRAWING

REMOVE ALL BURRS AND SHARP EDGES. DIMENSIONS ARE IN INCHES AND APPLY OVER ADDED FINISHES EXCEPT PAINT. SURFACE ROUGHNESS

TOLERANCE

DIMENSIONAL: X ± .1, ANGLES .XX ± .020 ± 1°, .XXX ± .010

HOLE SIZE: 0-.599 + .003, .600-.999 ± .004, 1.000-1.499 + .005

DASH NO.	NUMBER	QTY
	NEXT ASSEMBLY	

		DATE
DRAWN	S RODELL	6-28-79
CHECKED		
PROJ. ENG.		
MANUFACTURING		
QUALITY ASSUR		
ENG. SERV.		DATE

TITLE: SCHEMATIC, DOUBLE DENSITY COMPUTER SYSTEM

SCALE	SIZE	PART NUMBER	REV
~	C	8100-01	

CODE | SHEET 3 OF 5

BISHOP GRAPHICS/ACCUPRESS REORDER NO. A-4428

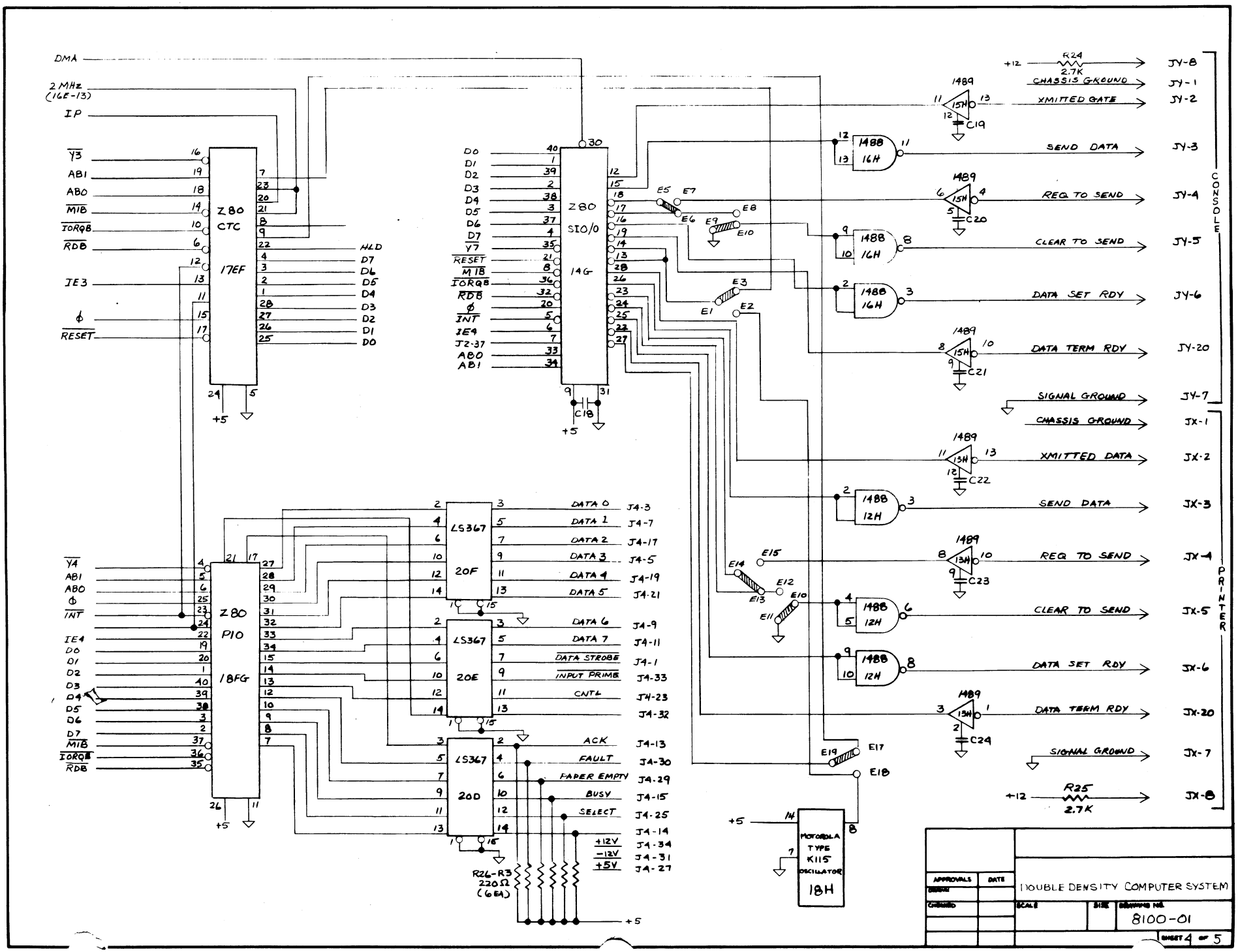
DMA
2 MHz (16E-13)
IP
Z80 CTC 17EF
Z80 SIO/0 14G
Z80 PIO 18FG
LS367 20F
LS367 20E
LS367 20D
MOTOROLA TYPE K115 OSCILLATOR 18H
R24 2.7K
R25 2.7K
R26-R31 220Ω (6EA)
CHASSIS GROUND
XMITTED GATE
SEND DATA
REQ TO SEND
CLEAR TO SEND
DATA SET RDY
DATA TERM RDY
SIGNAL GROUND
XMITTED DATA
DATA STROBE
INPUT PRIME
CNTL
ACK
FAULT
PAPER EMPTY
BUSY
SELECT
+12V
-12V
+5V
CONSOLE
PRINTER
JY-8
JY-1
JY-2
JY-3
JY-4
JY-5
JY-6
JY-20
JY-7
JX-1
JX-2
JX-3
JX-4
JX-5
JX-6
JX-20
JX-7
JX-8
J4-3
J4-7
J4-17
J4-5
J4-19
J4-21
J4-9
J4-11
J4-1
J4-33
J4-23
J4-32
J4-13
J4-30
J4-29
J4-15
J4-25
J4-14
J4-34
J4-31
J4-27
DOUBLE DENSITY COMPUTER SYSTEM
8100-01
SHEET 4 OF 5

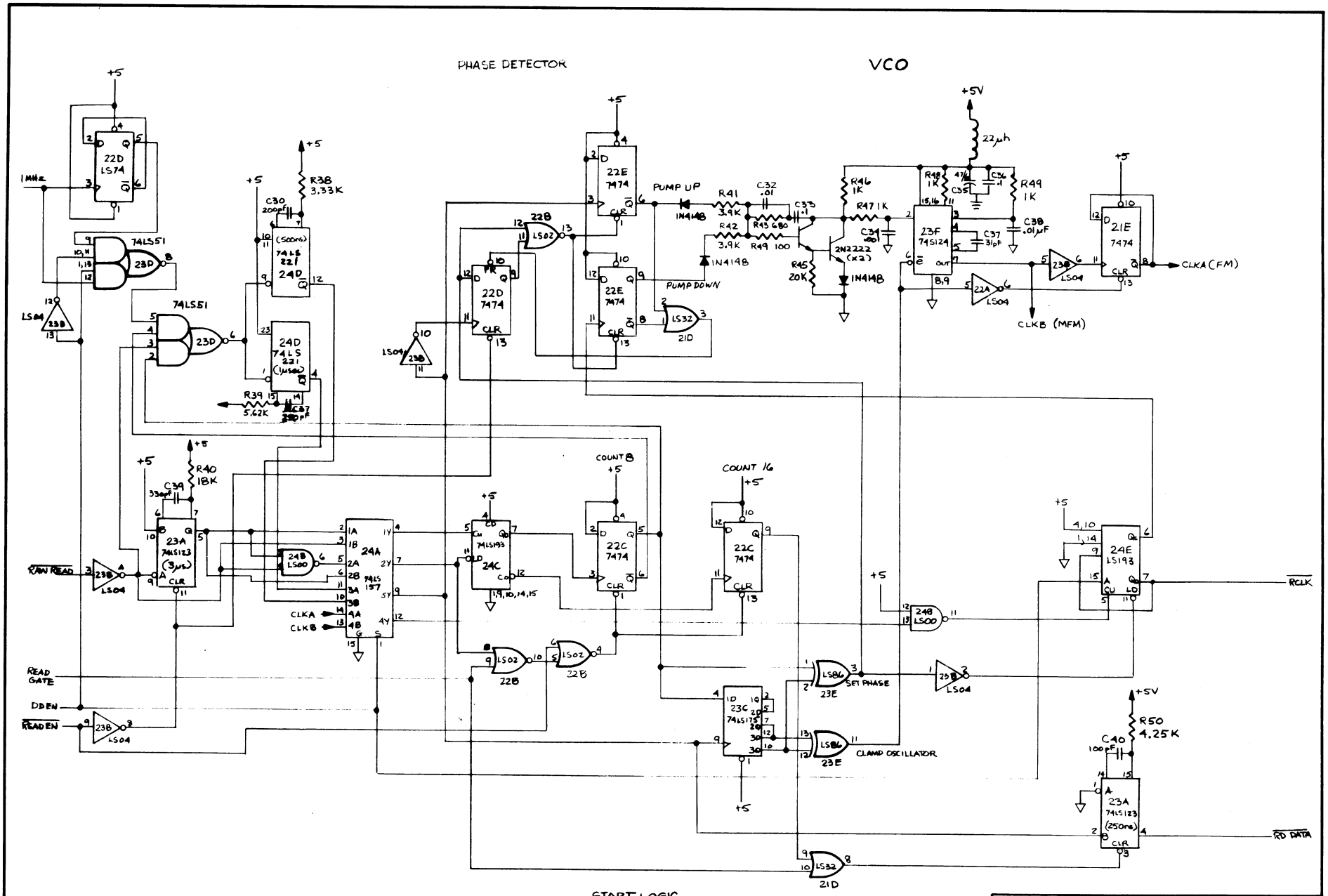

APPROVALS	DATE	DOUBLE DENSITY COMPUTER SYSTEM	
DRAWN			
CHECKED		SCALE	SIZE C — DRAWING NO. 8100-01
		DO NOT SCALE DRAWING	SHEET 5 OF 5

OVP TABULATION			
MODEL	R2	R4	R7
12	1.2K	1.2K	1.5K
24, 28	1.5K	390Ω	4.7K

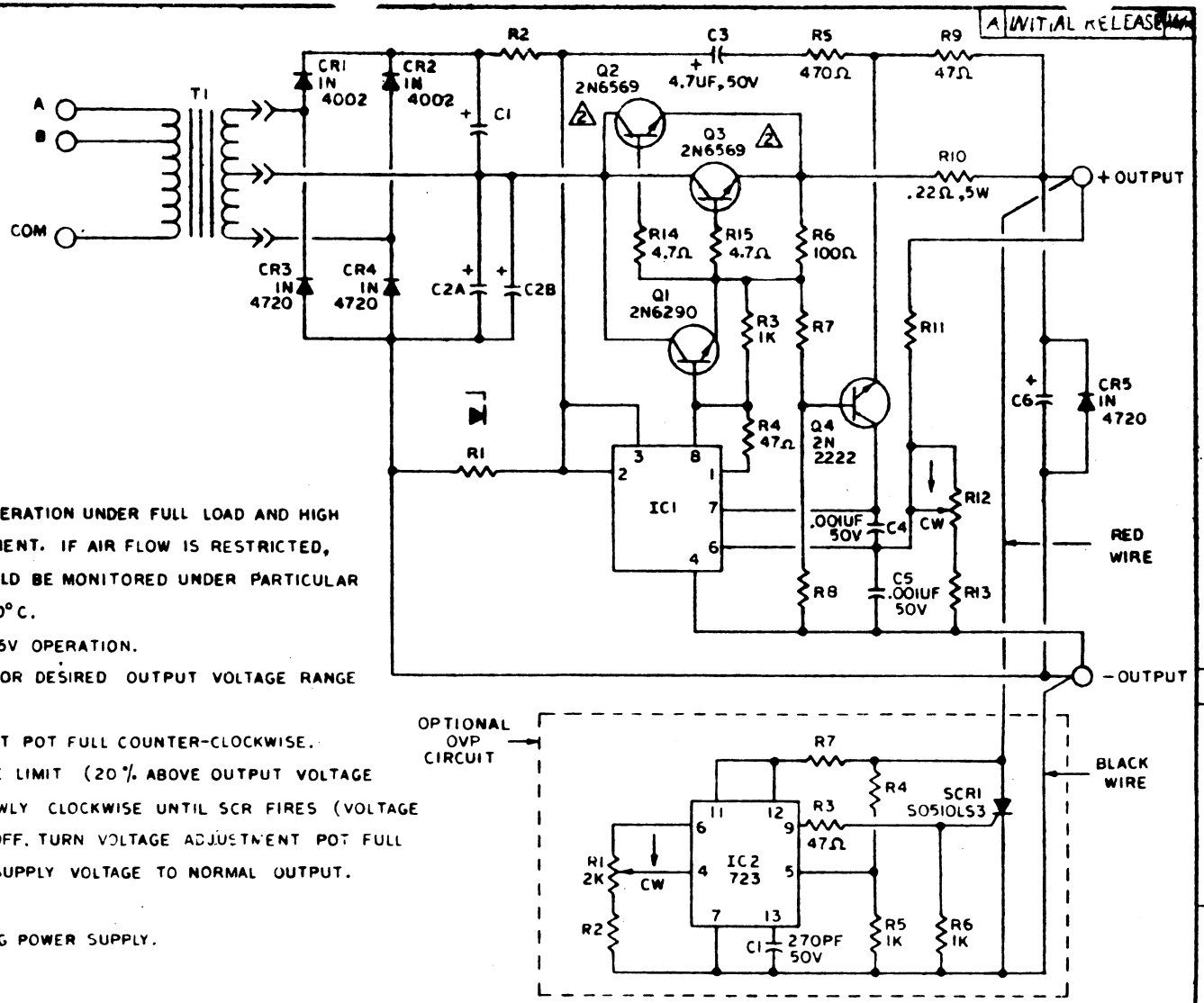

NOTES: UNLESS OTHERWISE SPECIFIED

1. ALL RESISTORS ARE 1/2W, ±5% - CARBON FILM

△2 Q2, Q3 2N3055 USED ON -24 & 28 MODELS ONLY.

OPERATING INSTRUCTIONS:

1. POWER SUPPLY IS DESIGNED FOR CONTINUOUS OPERATION UNDER FULL LOAD AND HIGH LINE CONDITIONS AT 40°C IN FREE AIR ENVIRONMENT. IF AIR FLOW IS RESTRICTED, THE CASE TEMP. OF 2N6569 TRANSISTOR SHOULD BE MONITORED UNDER PARTICULAR WORST CASE. MAXIMUM ALLOWABLE TEMP. IS 150°C.
2. RECOMMENDED EXTERNAL FUSING: 1 AMP FOR 115V OPERATION.
3. SELECT PROPER PRIMARY TRANSFORMER TAPS FOR DESIRED OUTPUT VOLTAGE RANGE (SEE TABULATION BLOCK).
4. TO SET OPTIONAL OVP: TURN OVP ADJUSTMENT POT FULL COUNTER-CLOCKWISE. SET OUTPUT VOLTAGE TO DESIRED OVERVOLTAGE LIMIT (20% ABOVE OUTPUT VOLTAGE RECOMMENDED). TURN OVP ADJUSTMENT POT SLOWLY CLOCKWISE UNTIL SCR FIRES (VOLTAGE DROPS TO APPROXIMATELY 1 VOLT). TURN POWER OFF. TURN VOLTAGE ADJUSTMENT POT FULL COUNTER-CLOCKWISE. RE-APPLY POWER AND SET SUPPLY VOLTAGE TO NORMAL OUTPUT.

CAUTION: READ INSTRUCTIONS BEFORE OPERATING POWER SUPPLY.

TABULATION

MODEL	INPUT TAP A	INPUT TAP B	IC1	C1	C2	C6	R1	R2	R7	R8	R11	R12	R13
XP30-12	11V, 3.0A 12V, 3.0A 13V, 2.7A	14V, 3.0A 15V, 3.0A 16V, 2.6A	LM305	100UF 35V	3.6KUF 35V	470UF 25V	5.6K	1.2K	330Ω	3.3K	18K	2K	1.8K
XP30-24	17 & 18V, 2.4A 19 & 20V, 2.3A	21 & 22V, 2.4A 23 & 24V, 2.3A	LM305A	47UF 63V	2.5KUF 50V	220UF 35V	12K	6.8K	220Ω	4.7K	15K	1K	1K
XP30-28	25 & 26V, 1.6A 27 & 28V, 1.2A	29 & 30V, 1.2A 31 & 32V, 1.0A	LM305A	47UF 63V	2.5UF 50V	220UF 35V	12K	10K	180Ω	6.8K	27K	1K	1.3K

PROPRIETARY INFORMATION

NO INFORMATION GIVEN HEREIN MAY BE DISSEMINATED TO ANY PERSON OR COMPANY WITHOUT THE EXPRESS PERMISSION OF XENTEK INC.

XENTEK INC. SAN MARCOS, CALIF.		
SCALE	APPROVED BY	DRAWN BY MAE
DATE 2-2-76		REVISED
POWER SUPPLY SCHEMATIC		REV. A
MODEL XP30 (11V-32V)		DRAWING NUMBER 3009-501

SHT. 1 OF 1

A | 3009-501

REVISIONS				
REV.	BY	DESCRIPTION	APPR.	DATE
NC	BS	INITIAL RELEASE	WM	1/24/80

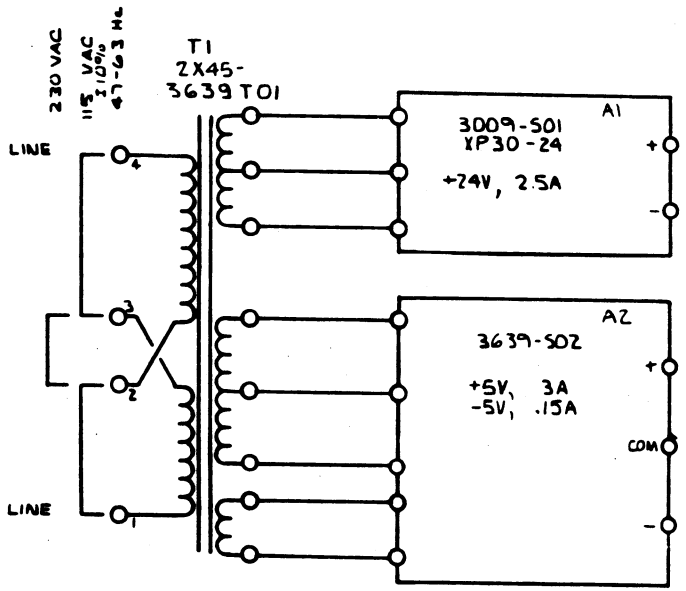

3639-501 NC

QTY REQ'D	DESCRIPTION	PART NO.	MATERIAL	MANUFACTURER	ITEM NO.

LIST OF MATERIAL

UNLESS OTHERWISE SPECIFIED DIMENSIONS ARE IN INCHES

TOLERANCES

FRAC. ±1/32 DEC. .XX ±.02 .XXX ±.010 ANGLES ±1/2°

MATERIAL:

FINISH:

SIGNATURES	DATES
DWN. A. Smith	1-18-80
CHK.	
DSGN.	
ENGR.	
APPR. J. Marshall	1-21-80

PROPRIETARY NOTICE

ALL PATENT OR OTHER PROPRIETARY RIGHTS PERTAINING TO THE ITEMS SOLD HEREUNDER SHALL REMAIN THE SOLE PROPERTY OF XENTEK INCORPORATED EXCEPT THAT THE PURCHASER SHALL HAVE THE RIGHT TO USE SUCH ITEMS FOR THEIR INTENDED PURPOSE.

DO NOT SCALE DWG.

XENTEK INCORPORATED
San Marcos, California

TITLE

SCHEMATIC,
POWER SUPPLY-2X45
(ALTOS COMPUTER)

JAN 22 1980

CODE IDENT	SIZE	DWG. NO.	REV.
53279	C	3639-501	NC

SCALE: NONE WEIGHT: ~ SHEET 1 OF 1

1. REF DOCUMENTS: B/M 3639-B01; SCHEMATIC 3009-501; 3639-501.

NOTES: UNLESS OTHERWISE SPECIFIED

REVISIONS				
REV.	BY	DESCRIPTION	APPR.	DATE
NC	BS	INITIAL RELEASE	[illegible]	[illegible]
A	PJ	ECN STD 038	[illegible]	[illegible]

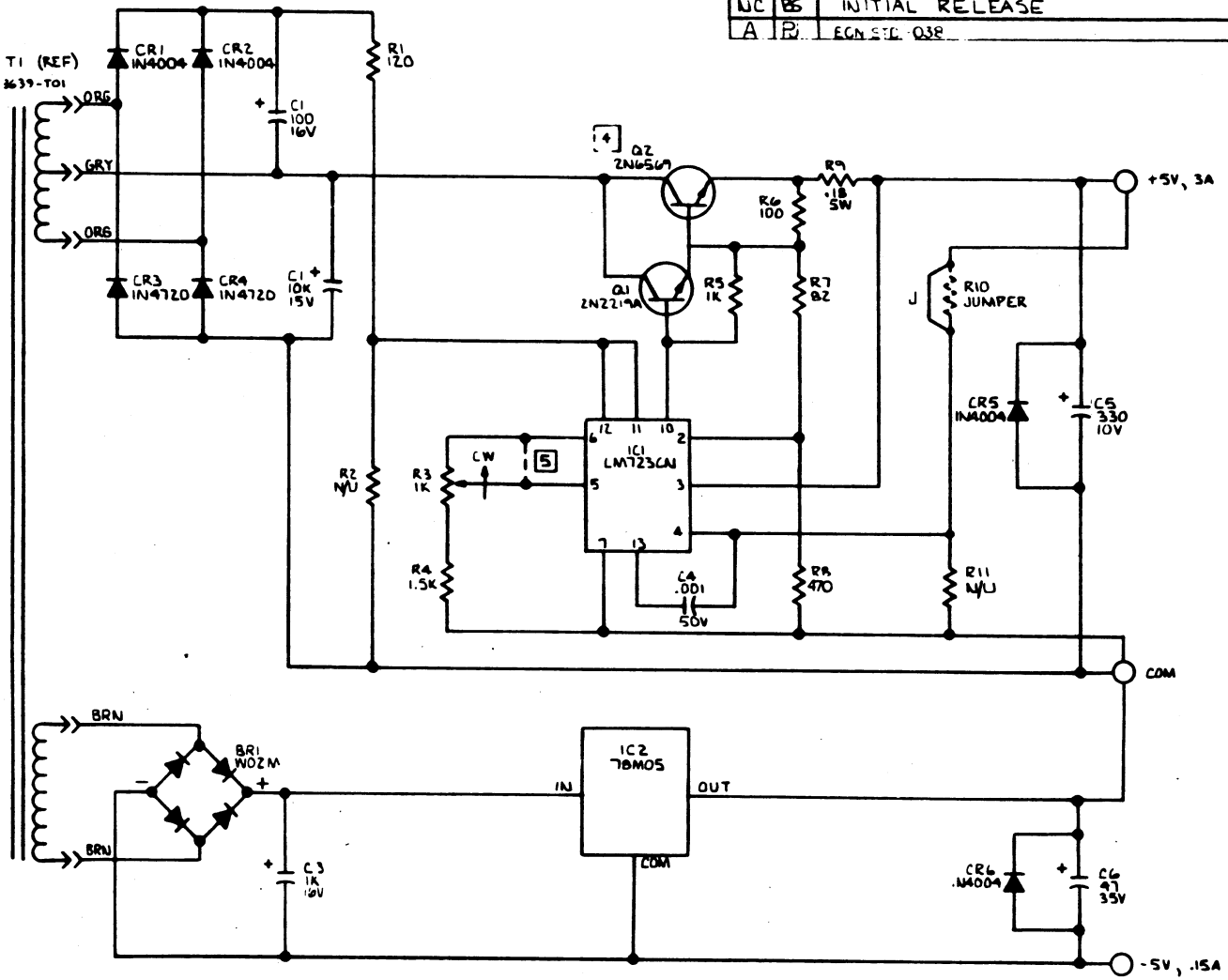

5 ETCH CUT BETWEEN PINS.

4 COMPONENTS MOUNTED ON CHASSIS.

3. ALL CAPACITANCE VALUES IN MICROFARADS.

2. ALL RESISTANCE VALUES IN OHMS ±5% 1/2 W.

1. REF DOCUMENTS: BM 3639-B02 SCHEMATIC 3639-S01.

NOTES: UNLESS OTHERWISE SPECIFIED.

QTY REQ'D	DESCRIPTION	PART NO.	MATERIAL	MANUFACTURER	ITEM NO.

LIST OF MATERIAL

UNLESS OTHERWISE SPECIFIED DIMENSIONS ARE IN INCHES

TOLERANCES

FRAC.	DEC.	ANGLES
±1/32	.XX ±.02 .XXX ±.010	±1/2°

MATERIAL:

FINISH:

SIGNATURES	DATES
DWN. B. Schmitz	1-18-80
CHK.	
DSGN.	
ENGR.	
APPR. [illegible]	1-21-80

PROPRIETARY NOTICE

ALL PATENT OR OTHER PROPRIETARY RIGHTS PERTAINING TO THE ITEMS SOLD HEREUNDER SHALL REMAIN THE SOLE PROPERTY OF XENTEK INCORPORATED EXCEPT THAT THE PURCHASER SHALL HAVE THE RIGHT TO USE SUCH ITEMS FOR THEIR INTENDED PURPOSE.

DO NOT SCALE DWG.

XENTEK INCORPORATED
San Marcos, California

TITLE
SCHEMATIC, REGULATOR
(ALTOS COMPUTER)

JAN 25 1980

CODE IDENT	SIZE	DWG. NO.	REV.
53279	C	3639-S02	A

SCALE: NONE | WEIGHT: — | SHEET 1 OF 1

3639-S02 A

	APPLICATION DATA INCLUDING:	MODEL
	1. SCHEMATIC 2. PARTS LIST 3. SPECIFICATION 4. OUTLINE & MOUNTING DRAWING	CP125 DISK-SYSTEM SERIES

SPECIFICATIONS:

AC INPUT: 115/230VAC ±10%
47-63Hz

DC OUTPUT:

VOLTAGE	CURRENT(AMPS)
5	6.0
24	1.3(1.7)Pk
12	1.0
-12 OR* -5	0.5 OR* 0.25

*JUMPER SELECTABLE ON P.C.BOARD

LINE REGULATION: ±.05% FOR A 10% LINE CHANGE

LOAD REGULATION: ±.05% FOR A 50% LOAD CHANGE

OUTPUT RIPPLE: 3mV Pk-Pk MAX

TRANSIENT RESPONSE: 30uSECONDS FOR A 50% LOAD CHANGE

OVERLOAD AND SHORT CIRCUIT PROTECTION: AUTOMATIC CURRENT LIMIT/ FOLDBACK

OVER VOLTAGE PROTECTION: SET AT 6.2 ±.4VDC ON +5V ONLY

STABILITY: ±.3% FOR 24HRS AFTER WARM-UP

INPUT FUSING: RECOMMENDED, FUSE AT 4A FOR 115VAC, 2A FOR 230VAC

TEMPERATURE COEFFICIENT: ±.03%/°C MAX

COOLING: UNITS ARE FULL RATED TO 50°C IN FREE AIR, MUST BE FAN COOLED WHEN MOUNTED IN CONFINED AREA

TEMPERATURE RATING:
0-50°C - 100%
60°C - 60%
70°C - 40%

EFFICIENCY: COMBINED EFFICIENCY APPROX. 55% @ 115VAC. FULL LOAD ON ALL OUTPUTS

CONSTRUCTION: ALL ALUMINUM CHASSIS

WEIGHT: 8LBS (3.6KG)

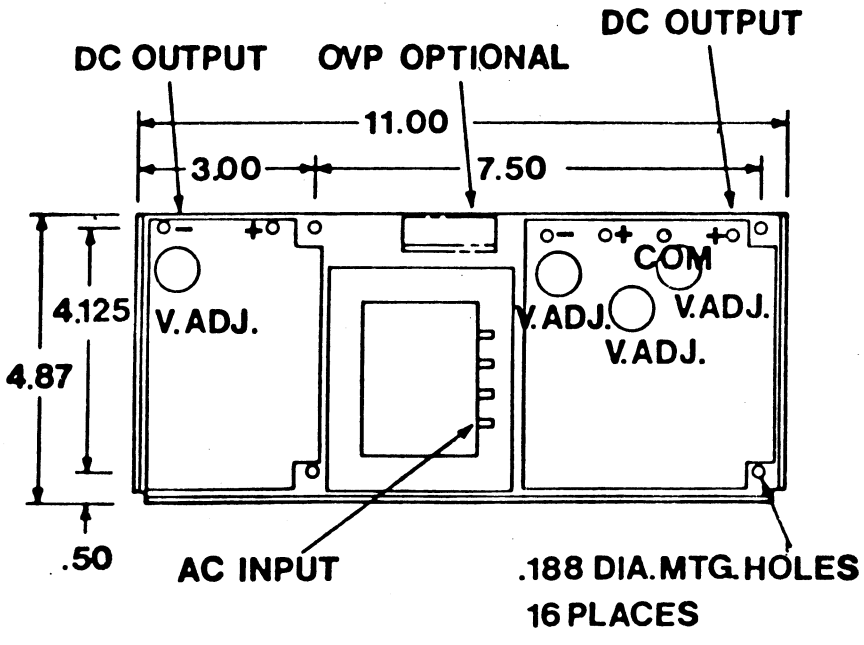

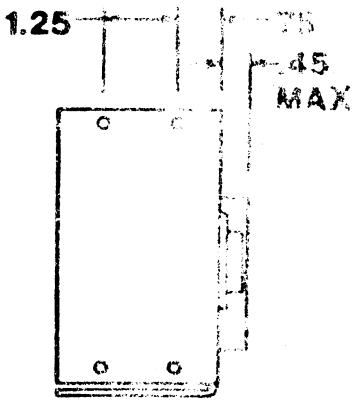

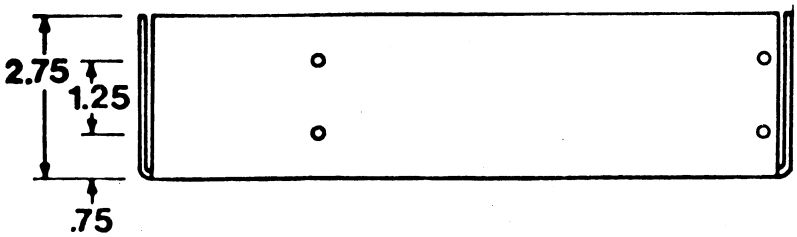

REF. DES.	CP125	CP132	CP133	DESCRIPTION
C1	2200/50V	2200/50V	2200/50V	CAPACITOR, ELECTROLYTIC
C2	2200/35V	2200/35V	2200/35V	
C3,4	470/35V	470/35V	470/35V	
C8,9	100/25V	100/25V	100/25V	
C10	47/50V	47/50V	47/50V	
C5-7	.001/100V	.001/100V	.001/100V	CAPACITOR, FILM
CR1,2	AE3B	AE3B	AE3B	RECTIFIER, 3A 100V
CR3,5,7-10	AE1C	AE1C	AE1C	RECTIFIER, 1A 200V
CR4	1N752A	1N752A	1N723A	ZENER DIODE, 300MW
CR6	-	-	-	
Q1,6,4	2N3055	2N3055	2N3055	TRANSISTOR, POWER NPN
Q2	TIP31A	TIP31A	TIP31A	TRANSISTOR, POWER NPN
Q3	2N2219A	2N2219A	2N2219A	TRANSISTOR, SIGNAL NPN
Q5	2N2905A	2N2905A	2N2905A	TRANSISTOR, SIGNAL PNP
R2,10	1.1K	1.1K	1.1K	RESISTOR, 1/2W CF 5%
R1	1.5K	1.5K	1.5K	
R3,6	750	750	750	
R5,15,13,14	330	330	330	
R7	10K	10K	10K	
R9	4.7K	4.7K	4.7K	
R12	330	330	330	
R17	1	1	1	
R21	-	-	-	
R8,16	.22	.22	.22	RESESTOR, 2W WW
R4,11,22	1500	1500	1500	POTENTIOMETER, 2W WW
R19,18	2.2K	2.2K	2.2K	RESISTOR, 1/4W CF 5%
R20	1.2K	1.2K	1.2K	
SCR1	-	-	-	SCR, 3A 30V
U1-3	UA723C	UA723C	UA723C	I.C. VOLTAGE REGULATOR
T1	10276	10331	10332	TRANSFORMER
P.C.B.	10250	10250	10250	PRINTED CIRCUIT BOARD
CHASSIS	10088	10091	10089	ALUMINUM, ANODIZED

REF. DES.	C5-6/OVP			DESCRIPTION
C1	16000/15V			CAPACITOR, ELECTROLYTIC
C2,4	1000/16V			
C3	.001/100V			CAPACITOR, FILM
CR1,2	MR751			RECTIFIER, 6A 100V
CR3,4	AE1C			RECTIFIER, 1A 200V
CR5	1N752A			ZENER DIODE, 300MW
R1,2	6.8			RESISTOR, 1/2W CF 5%
R3	47			
R4	1.5K			
R6	2.2K			
R7	3.9			
R8	1.1K			
R5	1500			POTENTIOMETER, 2W WW
Q1,2	2N3055			TRANSISTOR, POWER NPN
SCR1	S0308LS3			SCR, 8A 30V
U1	UA723C			I.C. VOLTAGE REGULATOR
T1	10101			TRANSFORMER
P.C.B.	10005			PRINTED CIRCUIT BOARD
CHASSIS	10081			ALUMINUM, ANODIAED

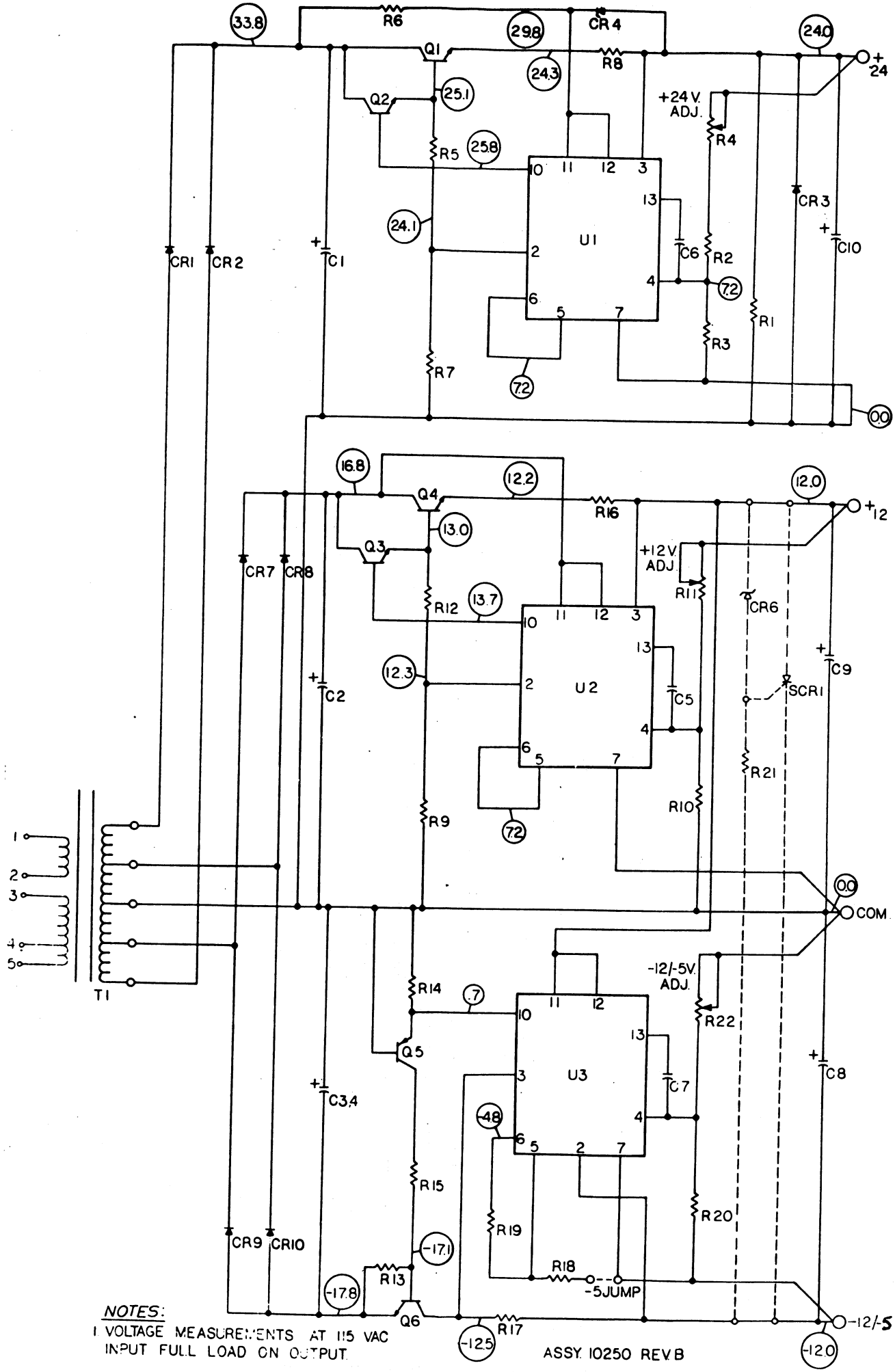

NOTES:
1 VOLTAGE MEASUREMENTS AT 115 VAC INPUT FULL LOAD ON OUTPUT

ASSY. 10250 REV. B

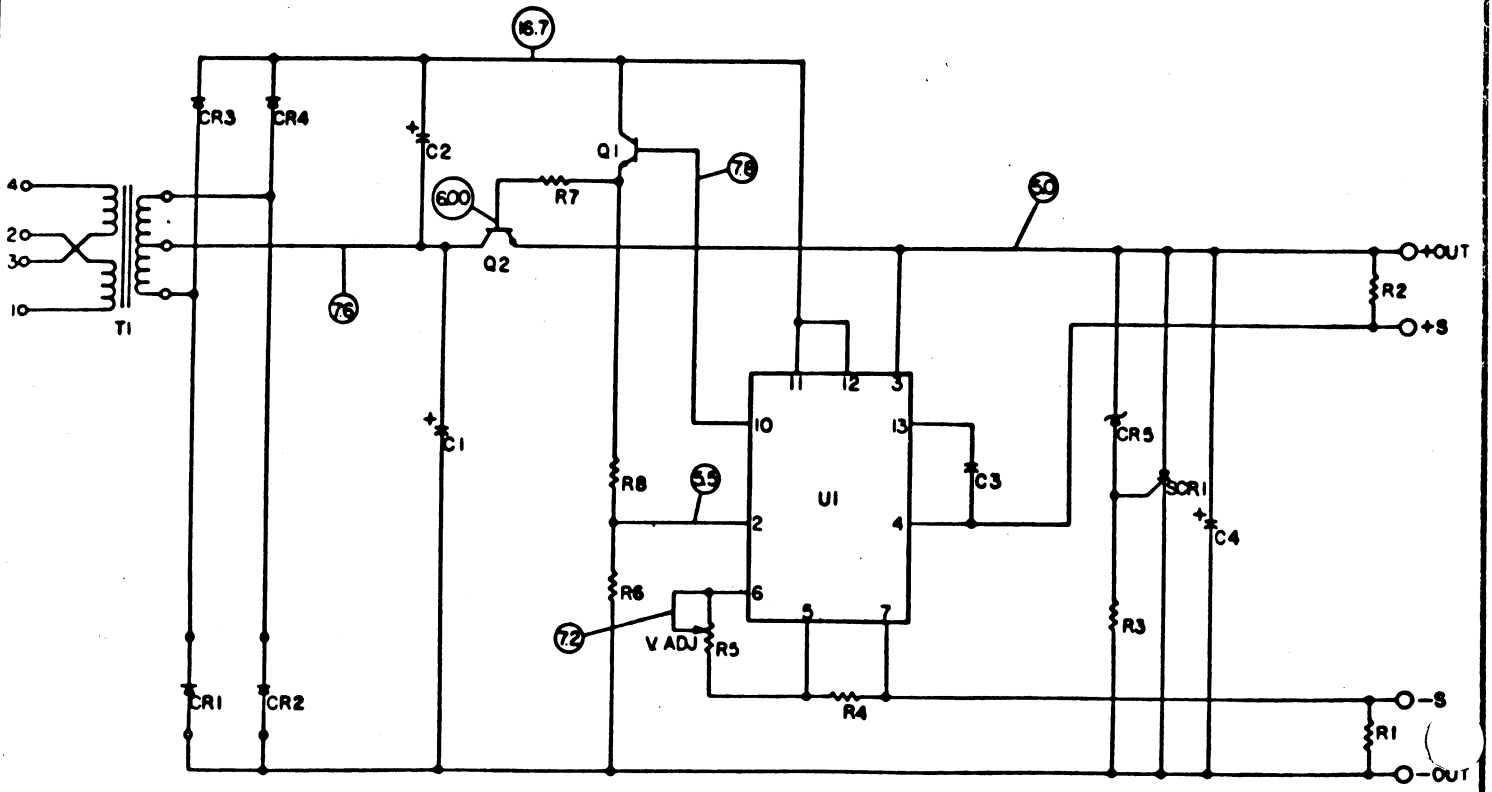

NOTES:

1 VOLTAGE MEASUREMENTS AT 115 VAC INPUT FULL LOAD ON OUTPUT.

2 ALL VOLTAGES REFERENCED TO NEG. OUTPUT.

3 (50) DENOTES 5V UNIT.

REVISIONS				
REV.	BY	DESCRIPTION	APPR.	DATE
NC	KAS	INITIAL RELEASE		4/27/79

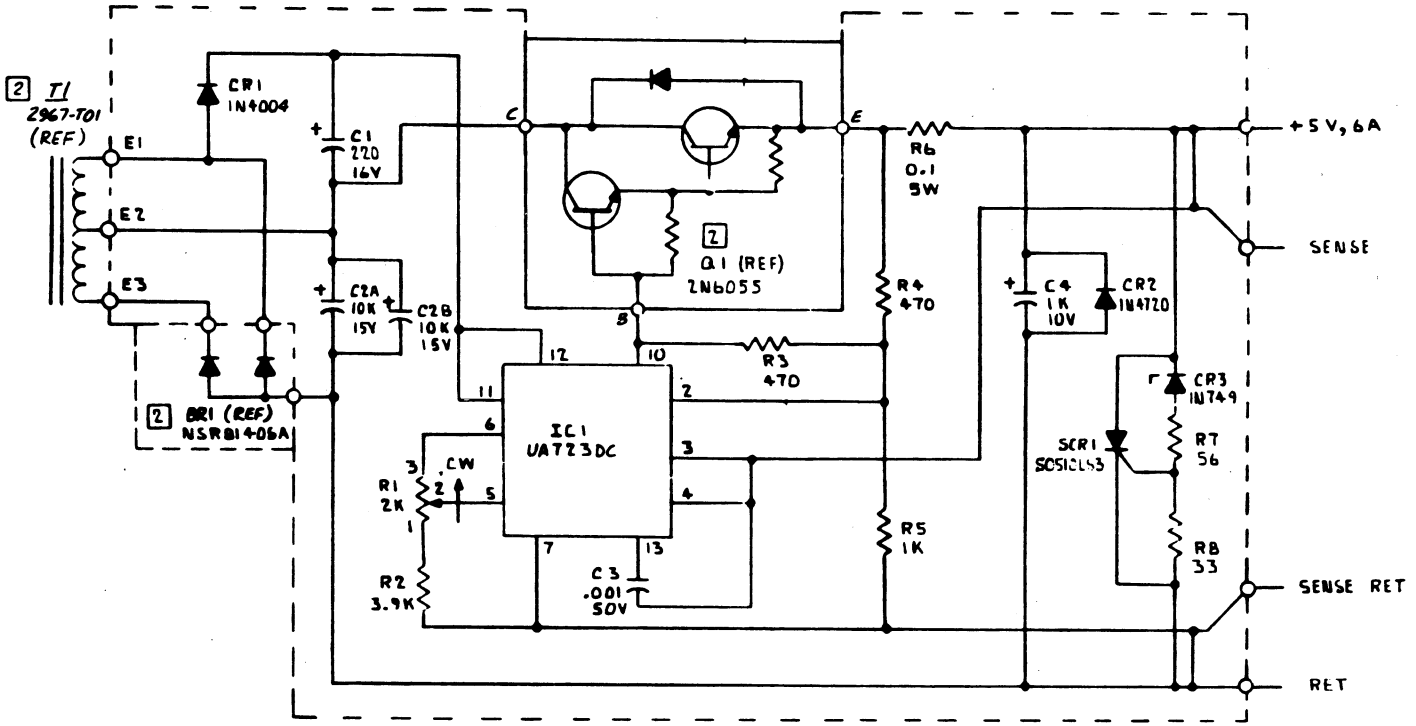

APR 27 1979

QTY REQ'D	DESCRIPTION	PART NO.	MATERIAL	MANUFACTURER	ITEM NO.

LIST OF MATERIAL

5. ALL CAPACITANCE VALUES IN MICROFARADS.
4. ALL RESISTANCE VALUES IN OHMS ± 5%, 1/2W.
3. REF DOCUMENTS: ASSY 2967-A03, SCHEM 2967-S01, PC BOARD 2967-D02.
[2] COMPONENTS MOUNTED ON CHASSIS (REF ONLY): BR1, Q1, T1.
1. LAST USED REF DESIGNATION: BR1, C4, CR3, E3, IC1, RB, SCR1.

NOTES: (UNLESS OTHERWISE SPECIFIED)

UNLESS OTHERWISE SPECIFIED DIMENSIONS ARE IN INCHES
TOLERANCES
FRAC. ±1/32 DEC. .XX ±.02 .XXX ±.010 ANGLES ±1/2°

MATERIAL:

FINISH:

SIGNATURES		DATES
DWN.	KAS	2/20/79
CHK.		
ENGR.		3-8-79
APPR.		3/14/79

PROPRIETARY NOTICE
ALL PATENT OR OTHER PROPRIETARY RIGHTS PERTAINING TO THE ITEMS SOLD HEREUNDER SHALL REMAIN THE SOLE PROPERTY OF XENTEK INCORPORATED EXCEPT THAT THE PURCHASER SHALL HAVE THE RIGHT TO USE SUCH ITEMS FOR THEIR INTENDED PURPOSE.

DO NOT SCALE DWG.

XENTEK INCORPORATED
San Marcos, California

TITLE
SCHEMATIC, REGULATOR ASSY
+5V, 6A
(ALTOS COMP)

CODE IDENT	SIZE	DWG. NO.	REV.
53279	C	2967-S03	NC

SCALE: NONE WEIGHT: — SHEET 1 OF 1

DNI 2967-S03

REVISIONS				
REV.	BY	DESCRIPTION	APPR.	DATE
NC	KAS	INITIAL RELEASE		

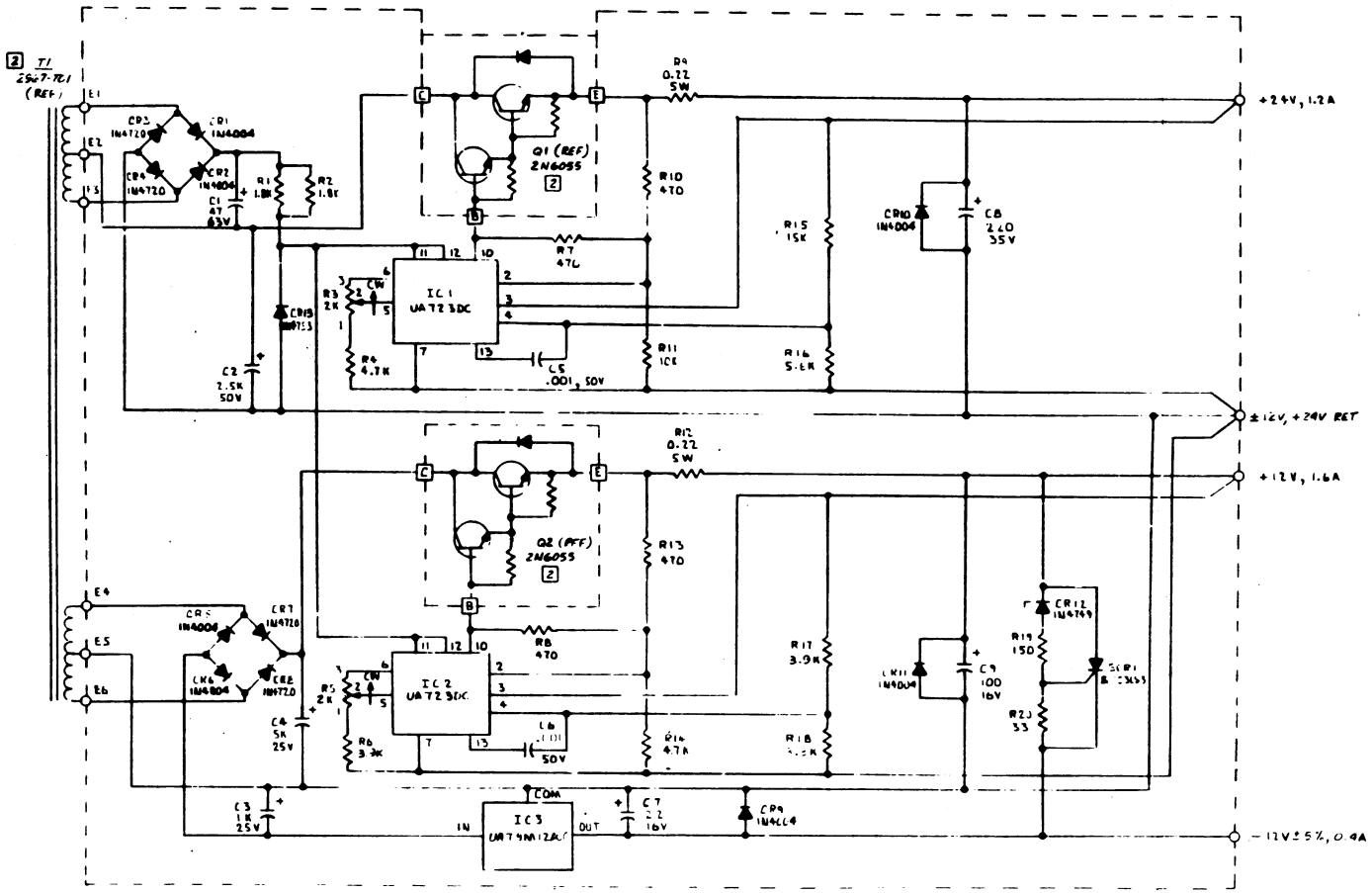

5. ALL CAPACITANCE VALUES IN MICROFARADS.
4. ALL RESISTANCE VALUES IN OHMS ±5%, 1/2W.
3. REF DOCUMENTS: ASSY 2967-A02, SCHEM 2967-S01, PC BOARD 2967-001.
2 COMPONENTS MOUNTED ON CHASSIS (REF ONLY): Q1, Q2, T1.
1. LAST USED REF DESIGNATION C9, CR12, E6, IC3, Q2, R20, SCR1.

NOTES: (UNLESS OTHERWISE SPECIFIED)

MAR 16 1979

QTY REQD	DESCRIPTION	PART NO	MATERIAL	MANUFACTURER	ITEM NO.

LIST OF MATERIAL

UNLESS OTHERWISE SPECIFIED DIMENSIONS ARE IN INCHES
TOLERANCES
FRAC. ±1/32 DEC .XX ±.02 .XXX ±.010 ANGLES ±1/2°

MATERIAL:

FINISH:

SIGNATURES	DATES
DWN. KAS	2/22/79
CHK.	
DSGN.	
ENGR.	3-8-79
APPR.	15-8-79

PROPRIETARY NOTICE:
ALL PATENT OR OTHER PROPRIETARY RIGHTS PERTAINING TO THE ITEMS SOLD HEREUNDER SHALL REMAIN THE SOLE PROPERTY OF XENTEK INCORPORATED EXCEPT THAT THE PURCHASER SHALL HAVE THE RIGHT TO USE SUCH ITEMS FOR THEIR INTENDED PURPOSE

DO NOT SCALE DWG

XENTEK INCORPORATED
San Marcos, California

TITLE
SCHEMATIC, REGULATOR ASSY
+12V, -12V, +24V
(ALTOS COMP)

CODE IDENT	SIZE	DWG. NO.	REV.
53279	D	2967-S02	NC

SCALE: NONE WEIGHT: — SHEET 1 OF 1